1983

ERVICE ANUAL

SUBARU

1600
1800

ENGINE AND BODY

FUJI HEAVY INDUSTRIES LTD.
TOKYO, JAPAN

Downloaded from www.Manualslib.com

SUBARU
1600
1800

FOREWORD

This service manual has been prepared to provide SUBARU service personnel with the necessary information and data for the correct maintenance and repair of SUBARU 1600 and 1800 series.
This manual completely covers the procedures for maintenance, disassembling, reassembling, inspection and adjustment of components and troubleshooting for guidance of both the fully qualified and the less-experienced mechanics.
Please peruse and utilize this manual fully to ensure complete maintenance and repair work for satisfying our customers by keeping their vehicles in optimum condition.
When replacement of parts during maintenance is needed, be sure to use SUBARU genuine parts.
All information, illustrations and specifications contained in this manual are based on the latest product information available at the time of publication approval.

FUJI HEAVY INDUSTRIES LTD.

TABLE OF CONTENTS

	CHAPTER
GENERAL INFORMATION	1
PERIODIC MAINTENANCE SERVICES	2
ENGINE	3
FUEL SYSTEM	4
EMISSION CONTROL SYSTEM	5
MANUAL TRANSMISSION AND DIFFERENTIAL	6
AUTOMATIC TRANSMISSION AND DIFFERENTIAL	7
REAR WHEEL DRIVING SYSTEM (4WD MODELS)	8
SUSPENSION, WHEELS AND AXLES	9
BRAKES	10
STEERING SYSTEM	11
PEDAL AND CABLE SYSTEM	12
HEATING, VENTILATING AND AIR-CONDITIONING SYSTEM	13
BODY	14
ELECTRICAL SYSTEM (ENGINE AND BODY)	15

SUBARU, and are trademarks of FUJI HEAVY INDUSTRIES LTD.
© Copyright 1982 FUJI HEAVY INDUSTRIES LTD.

Not to be reproduced in whole or in part without the prior written permission of FUJI HEAVY INDUSTRIES LTD., TOKYO JAPAN.

Downloaded from www.Manualslib.com manuals search engine

CHAPTER 1

GENERAL INFORMATION

		Page
1– 1.	GENERAL SPECIFICATIONS	1– 2
1– 2.	VEHICLE IDENTIFICATION NUMBERS (V.I.N.)	1– 4
	1. Applicable V.I.N. of This Manual	1– 4
	2. The Meaning of V.I.N.	1– 5
1– 3.	IDENTIFICATION NUMBERS	1– 6
	1. Vehicle Identification Number	1– 6
	2. Engine Serial Number	1– 6
	3. Transmission Serial Number	1– 6
1– 4.	LABELS	1– 6
	1. Safety Certification Plate	1– 6
	2. Vehicle Emission Control Information Labels	1– 6
	3. Emission Data Label (California Models Only)	1– 6
	4. Vehicle Identification Number Plate	1– 7
	5. Color Code Label	1– 7
1– 5.	RECOMMENDED LUBRICANTS	1– 7
1– 6.	RECOMMENDED SEALANTS, ADHESIVES AND GREASES	1– 8
1– 7.	TIGHTENING TORQUE OF STANDARD BOLTS AND NUTS	1– 9
1– 8.	OPENING ENGINE HOOD	1–10
1– 9.	LIFTING POINTS AND PROCEDURE	1–10
	1. Pantograph Jack	1–10
	2. Garage Jack	1–11
	3. Lift	1–11
1–10.	TOWING HOOKS	1–12

SUBARU

Downloaded from www.Manualslib.com manuals search engine

1-1. General Specifications

			1600		1800			1600	1800	1600		1800							
			Hatchback					Sedan		Hardtop		Station Wagon					BRAT		
			STD	DL	GL	4WD STD	4WD GL	DL	GL	DL	GL	DL	GL	4WD DL	4WD GL		4WD DL	4WD GL	
			4MT	5MT	5MT AT	4MT	D/r	5MT	5MT AT	5MT	5MT AT	5MT	5MT AT	4MT	D/r	AT	4MT	D/r	AT
DIMENSIONS	Overall length	mm (in)	3985 (156.9)	3985 (156.9)	4010 (157.9)	3995 (157.3)	3995 (157.3)	4250 (167.3)	4270 (168.1)	4250 (167.3)	4270 (168.1)	4280 (168.5)	4300 (169.3)	4285 (168.7)	4285 (168.7)	4285 (168.7)	4425 (174.2)	4425 (174.2)	4425 (174.2)
	Overall width	mm (in)	1610 (63.4)	1610 (63.4)	1615 (63.6)	1620 (63.8)	1620 (63.8)	1610 (63.4)	1615 (63.6)	1610 (63.4)	1615 (63.6)	1610 (63.4)	1615 (63.6)	1620 (63.8)	1620 (63.8)	1620 (63.8)	1635 (64.4)	1635 (64.4)	1635 (64.4)
	Overall height	mm (in)	1365 (53.7)	1365 (53.7)	1365 (53.7)	1410 (55.7)	1415 (55.7)	1365 (53.7)	1365 (53.7)	1350 (53.1)	1350 (53.1)	1390 (54.7)	1390 (54.7)	1440 (56.7)	1445 (56.9)	1445 (56.9)	1440 (56.7)	1445 (56.9)	1445 (56.9)
	Compartment (*1 Cargo space at two seats; *2 Cargo space at four seats; *3 Cargo space BRAT – rear cargo bed only)	Length mm (in)	1700 (66.9)	1700 (66.9)	1700 (66.9)	1700 (66.9)	1700 (66.9)	1750 (68.9)	1750 (68.9)	1750 (68.9)	1750 (68.9)	*1 1500 (59.1)	*1 1500 (59.1)	*1 1500 (59.1)	*1 1500 (59.1)	*1 1500 (59.1)	*4 960 (37.8)	*4 960 (37.8)	*4 960 (37.8)
												*2 785 (30.9)	*2 785 (30.9)	*2 785 (30.9)	*2 785 (30.9)	*2 785 (30.9)	*5 1610 (63.4)	*5 1610 (63.4)	*5 1610 (63.4)
		Width mm (in)	1345 (53.0)	1345 (53.0)	1345 (53.0)	1345 (53.0)	1345 (53.0)	1345 (53.0)	1345 (53.0)	1345 (53.0)	1345 (53.0)	*1 1290 (50.8)	*1 1290 (50.8)	*1 1290 (50.8)	*1 1290 (50.8)	*1 1290 (50.8)	1300 (51.2)	1300 (51.2)	1300 (51.2)
												*2 1320 (52.0)	*2 1320 (52.0)	*2 1320 (52.0)	*2 1320 (52.0)	*2 1320 (52.0)			
		Height mm (in)	1115 (43.9)	1115 (43.9)	1115 (43.9)	1115 (43.9)	1115 (43.9)	1115 (43.9)	1115 (43.9)	1105 (43.5)	1105 (43.5)	*3 860 (33.9)	*3 860 (33.9)	*3 860 (33.9)	*3 860 (33.9)	*3 860 (33.9)	–	–	–
	Wheelbase	mm (in)	2380 (93.7)	2380 (93.7)	2380 (93.7)	2370 (93.3)	2370 (93.3)	2460 (96.9)	2460 (96.9)	2460 (96.9)	2460 (96.9)	2455 (96.7)	2455 (96.7)	2445 (96.3)	2445 (96.3)	2445 (96.3)	2445 (96.3)	2445 (96.3)	2445 (96.3)
	Tread	Front mm (in)	1330 (52.4)	1330 (52.4)	1330 (52.4)	1310 (51.6)	1335 (52.6)	1330 (52.4)	1330 (52.4)	1330 (52.4)	1330 (52.4)	1325 (52.5)	1325 (52.5)	1310 (51.6)	1335 (52.6)	1335 (52.6)	1310 (51.6)	1335 (52.6)	1335 (52.6)
		Rear mm (in)	1345 (53.0)	1345 (53.0)	1345 (53.0)	1345 (53.0)	1370 (53.9)	1345 (53.0)	1345 (53.0)	1345 (53.0)	1345 (53.0)	1345 (53.0)	1345 (53.0)	1340 (52.8)	1365 (53.7)	1365 (53.7)	1340 (52.8)	1365 (53.7)	1365 (53.7)
	Minimum road clearance	mm (in)	165 (6.5)	165 (6.5)	165 (6.5)	205 (8.1)	210 (8.3)	165 (6.5)	165 (6.5)	165 (6.5)	165 (6.5)	175 (6.9)	175 (6.9)	205 (8.1)	210 (8.3)	205 (8.1)	205 (8.1)	210 (8.3)	210 (8.3)

*4: Between rear end of seat and rear gate
*5: Between back panel and rear gate

Downloaded from www.Manualslib.com manuals search engine

			1600		1800			1600	1800	1600	1800								
			Hatchback					Sedan		Hardtop		Station Wagon					BRAT		
			STD	DL	GL	4WD STD	4WD GL	DL	GL	DL	GL	DL	GL	4WD DL	4WD GL		4WD DL	4WD GL	
			4MT	5MT	5MT AT	4MT	D/r	5MT	5MT AT	5MT	5MT AT	5MT	5MT AT	4MT	D/r	AT	4MT	D/r	AT
WEIGHT	Curb weight ★ (*1 5MT of GL & GLF models *2 5MT of DL model and AT of GL & GLF models)	Front kg (lb)	583 (1285)	587 (1295)	*1 603 (1330) *2 615 (1355)	592 (1305)	615 (1355)	587 (1295)	*1 610 (1345) *2 624 (1375)	592 (1305)	*1 615 (1335) *2 626 (1380)	599 (1320)	*1 612 (1350) *2 624 (1375)	603 (1330)	622 (1370)	631 (1390)	596 (1315)	617 (1360)	626 (1380)
		Rear kg (lb)	347 (765)	347 (765)	*1 359 (790) *2 367 (810)	384 (845)	399 (880)	379 (835)	*1 383 (845) *2 387 (855)	365 (805)	*1 374 (825) *2 379 (835)	422 (930)	*1 435 (960) *2 442 (975)	469 (1035)	469 (1035)	474 (1045)	391 (860)	401 (885)	406 (895)
		Total kg (lb)	930 (2050)	934 (2060)	*1 962 (2120) *2 982 (2165)	976 (2150)	1014 (2235)	966 (2130)	*1 993 (2190) *2 1011 (2230)	957 (2110)	*1 989 (2180) *2 1005 (2215)	1021 (2250)	*1 1048 (2310) *2 1066 (2350)	1072 (2365)	1091 (2405)	1105 (2435)	987 (2175)	1018 (2245)	1032 (2275)
	Gross Vehicle weight	Front kg (lb)	803 (1770)	803 (1770)	803 (1770)	780 (1720)	780 (1720)	803 (1770)	803 (1770)	803 (1770)	803 (1770)	803 (1770)	803 (1770)	780 (1720)	780 (1720)	796 (1755)	780 (1720)	780 (1720)	780 (1720)
		Rear kg (lb)	658 (1450)	658 (1450)	658 (1450)	680 (1500)	680 (1500)	658 (1450)	658 (1450)	658 (1450)	658 (1450)	744 (1640)	762 (1680)	789 (1740)	789 (1740)	796 (1755)	789 (1740)	789 (1740)	789 (1740)
		Total kg (lb)	1461 (3220)	1461 (3220)	1461 (3220)	1461 (3220)	1461 (3220)	1461 (3220)	1461 (3220)	1461 (3220)	1461 (3220)	1547 (3410)	1565 (3450)	1569 (3460)	1569 (3460)	1592 (3510)	1569 (3460)	1569 (3460)	1569 (3460)

★ Vehicle with optional equipment is out of this specifications.

Downloaded from www.Manualslib.com manuals search engine

1-2. Vehicle Identification Numbers (V.I.N.)

1. Applicable V.I.N. of This Manual

• 1600 cc Engine																			
2-Door Hatchback	STD	(4MT)	J	F	1	A	F	2	1	B	X	D	A	1	0	0	0	0	1	and after
2-Door Hatchback	DL	(5MT)	J	F	1	A	F	2	2	B	X	D	B	1	0	0	0	0	1	and after
4-Door Sedan	DL	(5MT)	J	F	1	A	B	2	2	B	X	D	B	2	0	0	0	0	1	and after
Hardtop	DL	(5MT)	J	F	1	A	W	2	2	B	X	D	B	3	0	0	0	0	1	and after
• 1800 cc Engine																			
2-Door Hatchback	GL	(5MT)	J	F	1	A	F	4	3	B	X	D	B	1	0	0	0	0	1	and after
2-Door Hatchback	GL	(AT)	J	F	1	A	F	4	3	B	X	D	C	1	0	0	0	0	1	and after
2-Door Hatchback	4WD STD	(4MT)	J	F	2	A	F	5	1	B	X	D	D	1	0	0	0	0	1	and after
2-Door Hatchback	4WD GL	(4MT, Dual-range)	J	F	2	A	F	5	3	B	X	D	E	1	0	0	0	0	1	and after
4-Door Sedan	GL	(5MT)	J	F	1	A	B	4	3	B	X	D	B	2	0	0	0	0	1	and after
4-Door Sedan	GL	(AT)	J	F	1	A	B	4	3	B	X	D	C	2	0	0	0	0	1	and after
Hardtop	GL	(5MT)	J	F	1	A	W	4	3	B	X	D	B	3	0	0	0	0	1	and after
Hardtop	GL	(AT)	J	F	1	A	W	4	3	B	X	D	C	3	0	0	0	0	1	and after
Station Wagon	DL	(5MT)	J	F	1	A	M	4	2	B	X	D	B	4	0	0	0	0	1	and after
Station Wagon	GL	(5MT)	J	F	1	A	M	4	3	B	X	D	B	4	0	0	0	0	1	and after
Station Wagon	GL	(AT)	J	F	1	A	M	4	3	B	X	D	C	4	0	0	0	0	1	and after
Station Wagon	4WD DL	(4MT)	J	F	2	A	M	5	2	B	X	D	D	4	0	0	0	0	1	and after
Station Wagon	4WD GL	(4MT, Dual-range)	J	F	2	A	M	5	3	B	X	D	E	4	0	0	0	0	1	and after
Station Wagon	4WD GL	(AT)	J	F	2	A	M	5	3	B	X	D	F	4	0	0	0	0	1	and after
BRAT	4WD DL	(4MT)	J	F	2	A	T	5	2	B	X	D	D	5	0	0	0	0	1	and after
BRAT	4WD GL	(4MT, Dual-range)	J	F	2	A	T	5	3	B	X	D	E	5	0	0	0	0	1	and after
BRAT	4WD GL	(AT)	J	F	2	A	T	5	3	B	X	D	F	5	0	0	0	0	1	and after

Abbreviations used

4MT: 4-speed manual transmission
5MT: 5-speed manual transmission
AT: Automatic transmission

Downloaded from www.Manualslib.com manuals search engine

2. The Meaning of V.I.N.

Maker identifier
Vehicle attribute
Vehicle identification

J F 1 A F 2 1 B X D A 1 0 0 0 0 1

Sequential number
- 100001 and after : Hatchback
- 200001 and after : 4-Door Sedan
- 300001 and after : Hardtop
- 400001 and after : Station Wagon
- 500001 and after : BRAT

Plant of manufacture and transmission type
- A : Gunma manufacture – 4MT
- B : Gunma manufacture – 5MT
- C : Gunma manufacture – AT
- D : Gunma manufacture – 4WD 4MT
- E : Gunma manufacture – 4WD 4MT, Dual-range
- F : Gunma manufacture – 4WD AT

Model year
- D : 1983

Check digit
- 0 thru 9 and X, varies

Weight class
- B : 3,000 to 4,000 lb GVWR

Model
- 1 : Standard model
- 2 : DL model
- 3 : GL model

Series and engine type
- 1 : 1300 cc engine
- 2 : 1600 cc engine
- 3 : 1600 cc engine 4WD
- 4 : 1800 cc engine
- 5 : 1800 cc engine 4WD

Body type
- F : Hatchback
- B : 4-Door Sedan
- W : Hardtop
- M : Station Wagon
- T : BRAT

Line restraint type
- A : Fuji Subaru line and seat belts
- B : Fuji Subaru line and air bag

Type of vehicle
- 1 : Passenger vehicle
- 2 : Multipurpose passenger vehicle

Manufacturer and make
Fuji Heavy Industries Ltd. SUBARU

Downloaded from www.Manualslib.com manuals search engine

1-3. Identification Numbers

1. Vehicle Identification Number

The vehicle identification number is stamped on the bulkhead panel of the engine compartment.

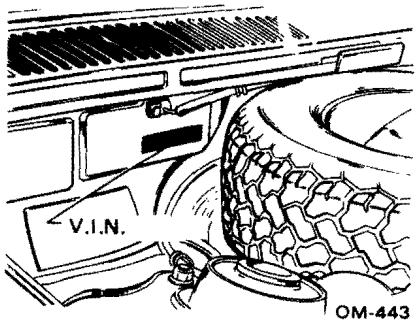

Fig. 1-1 V.I.N. location

2. Engine Serial Number

The engine serial number is stamped on the right side of the crankcase at the front.

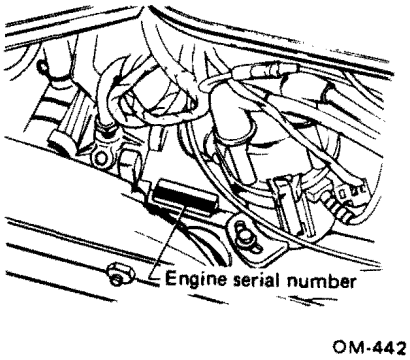

Fig. 1-2 Engine serial number location

3. Transmission Serial Number

The transmission number label is stuck on the right upper surface of main case (MT) or converter housing (AT).

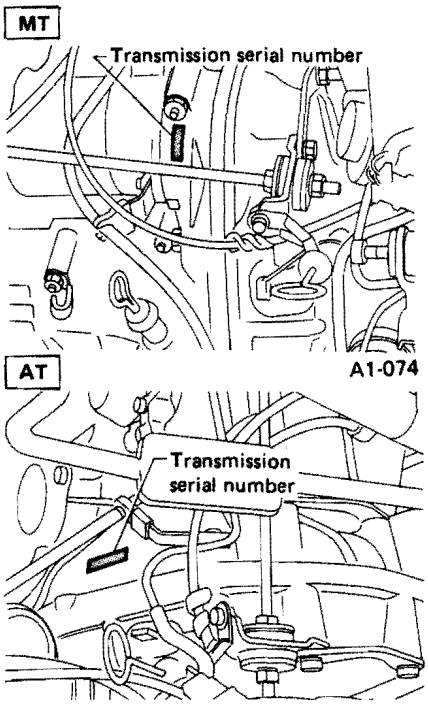

Fig. 1-3

NOTE:
Engine, transmission and vehicle identification numbers are used for factory communications such as Technical information, Service bulletins and other information.

1-4. Labels

1. Safety Certification Plate

Safety certification plate is stuck near the driver's side door striker.

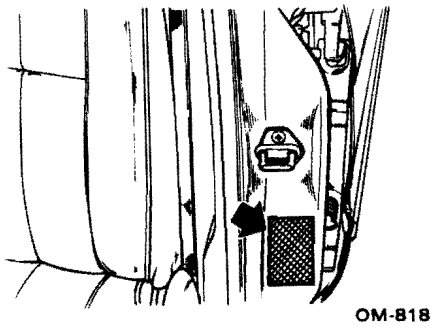

Fig. 1-4 Safety cartification plate

2. Vehicle Emission Control Information Labels

Vehicle emission control information labels are stuck under the engine hood.

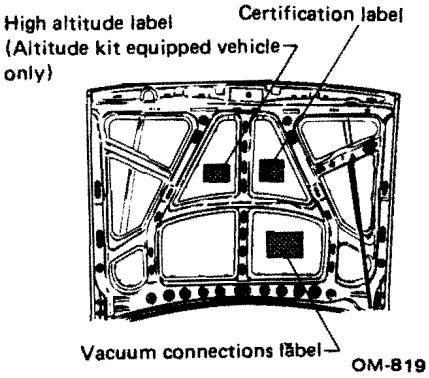

Fig. 1-5 Vehicle emission control labels

3. Emission Data Label (California Models Only)

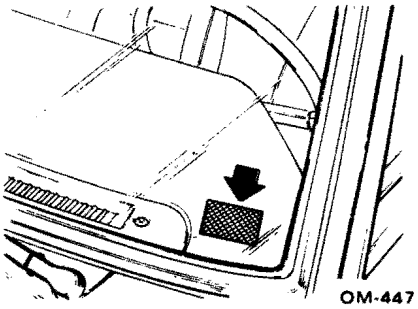

Fig. 1-6 Emission data label

Downloaded from www.Manualslib.com manuals search engine

4. Vehicle Identification Number Plate

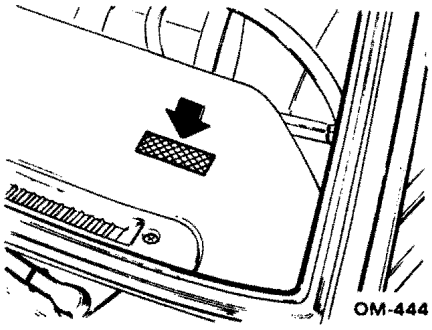

Fig. 1-7 Vehicle identification number plate

5. Color Code Label

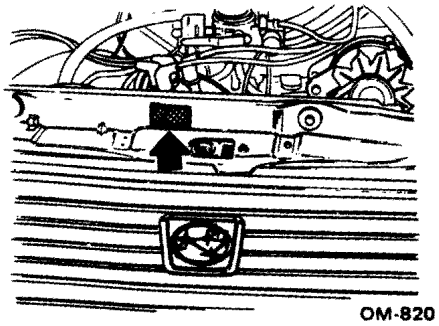

Fig. 1-8 Color code label

1-5. Recommended Lubricants

ITEM	API Classification	SAE viscosity No. and Applicable Temperature
		(°F) -30° 0° 30° 60° 90°
		(°C) -34° -18° 0° 16° 32°
• Engine oil	SE	40 30, 20W-40, 20W-50 10W-30, 10W-40, 10W-50
	SF	5W-30 (5W-30 is not recommended for sustained high speed driving.)
• Transmission and differential gear oil • 4WD rear differential gear oil	GL-5	90 85W 80W

NOTE:

Each oil manufacturer has its base oil and additives. Thus do not mix two or more brands.

Downloaded from www.Manualslib.com manuals search engine

1-6. Recommended Sealants, Adhesives and Greases

		Recommended	Application	Equivalent
1.	Sealant	Fuji Bond C (P/N 004403004)	Mating surfaces of crank and transmission cases, plugs, etc.	Dow Corning's No. 7038
		Fuji Bond D (P/N 004403005)	Cover gasket of water pump (Fuji Bond C can be used instead), etc.	———
		Three Bond 1215 (P/N 004403007)	Flywheel bolts, mating surface of fly-wheel housing.	Dow Corning's No. 7038
		Three Bond 1201 (P/N 004403008)	Cylinder head gaskets (Super Three Bond 50 can be used for the same purpose).	Dow Corning's No. 3145
		Starcalking B-33A (P/N 000018901)	Sealing against water and dust entry through weatherstrips, grommets, etc.	Butyl Rubber Sealant
2.	Adhesive	Cemedine 5430L –	Weatherstrips and other rubber parts, plastics and textiles except soft vinyl parts.	3M's EC-1770 EC-1368
		Cemedine 540 –	Soft vinyl parts, and other parts subject to gasoline, grease or oil. e.g. trim leather, gear shift boot, door inner remote cover, etc.	3M's EC-776 EC-847 EC-1022 (Spray Type)
		Cemedine 3000 –	Bonding metals, glass, plastic and rubber parts. Repairing slightly torn weather-strips, etc.	Armstrong's Eastman 910
		Starseal U-70 for USA & Canada –	Weatherstrips securing windshield to body panels to meet the requirements of Motor Vehicle Safety Standard.	Essex Chemical Corp's Urethane E
3.	Grease	FX clutch grease (P/N 000040901)	Splines of transmission main shaft.	———
		Molylex No. 2 (P/N 623029980)	CVJ and DOJ joints of axle shafts.	———
		PBC (P/N 003607000)	Stopper plugs of the front disk brake caliper.	———
		Silicone KS64 (P/N 003606010)	Brake caliper body (Piston, spindle adjuster O-ring), battery terminals, distributor, hood latch, etc.	———
		Silicolube G-30M (P/N 004404002)	Control cables and carburetor linkages subject to cold weather, water-pump impeller, door latch, striker, battery terminals, etc.	———
		ABK 100 (P/N 003602000)	Contacting surfaces of drum brake shoes and shoe clearance adjuster.	———
		Niglube RX-2 (P/N 003606000)	Disk brake caliper (lever, connecting link and spindle head).	———
		Valiant grease M-2 (P/N 003608001)	Steering gearbox (Both manual and power steering)	———

NOTE: The adhesives in the above table are not available from our parts department. Some of them and their equivalent products may be purchased from your local vendors.

Downloaded from www.Manualslib.com manuals search engine

1-7. Tightening Torque of Standard Bolts and Nuts

(1) ENGINE & TRANSMISSION

Unit: N·m (kg-m, ft-lb)

Dia. x Pitch (mm)	5T	7T	9T	10T
4 x 0.75	1.03 – 1.52 (0.105 – 0.155, 0.76 – 1.12)	1.52 – 2.01 (0.155 – 0.205, 1.12 – 1.48)	2.50 – 2.99 (0.255 – 0.305, 1.84 – 2.21)	2.99 – 3.48 (0.305 – 0.355, 2.21 – 2.57)
5 x 0.9	2.50 – 2.99 (0.255 – 0.305, 1.84 – 2.21)	2.9 – 3.9 (0.30 – 0.40, 2.2 – 2.9)	4.9 – 5.9 (0.50 – 0.60, 3.6 – 4.3)	5.4 – 6.4 (0.55 – 0.65, 4.0 – 4.7)
6 x 1.0	4.4 – 5.4 (0.45 – 0.55, 3.3 – 4.0)	5.9 – 6.9 (0.60 – 0.70, 4.3 – 5.1)	9.37 – 10.84 (0.955 – 1.105, 6.91 – 7.99)	10 – 12 (1.0 – 1.2, 7 – 9)
8 x 1.25	12 – 14 (1.2 – 1.4, 9 – 10)	14.2 – 17.2 (1.45 – 1.75, 10.5 – 12.7)	23 – 26 (2.3 – 2.7, 17 – 20)	25 – 28 (2.5 – 2.9, 18 – 21)
10 x 1.25	25 – 28 (2.5 – 2.9, 18 – 21)	30 – 36 (3.1 – 3.7, 22 – 27)	46 – 54 (4.7 – 5.5, 34 – 40)	49.5 – 58.4 (5.05 – 5.95) 36.5 – 43.0)
12 x 1.5	41 – 49 (4.2 – 5.0, 30 – 36)	53 – 63 (5.4 – 6.4, 39 – 46)	84 – 98 (8.6 – 10.0, 62 – 72)	88 – 106 (9.0 – 10.8, 65 – 78)
14 x 1.6	71 – 84 (7.2 – 8.6, 52 – 62)	88 – 106 (9.0 – 10.8, 65 – 78)	139 – 165 (14.2 – 16.8, 103 – 122)	147 – 175 (15.0 – 17.8, 108 – 129)

(2) BODY

Unit: N·m (kg-m, ft-lb)

	Dia. (mm)	4T	7T	9T
TC-002	4	1.7 – 2.6 (0.17 – 0.27, 1.2 – 2.0)		
	5	2.9 – 5.9 (0.30 – 0.60, 2.2 – 4.3)		
	6	5.4 – 9.3 (0.55 – 0.95, 4.0 – 6.9)		
	8	12.7 – 22.6 (1.30 – 2.30, 9.4 – 16.6)	22.6 – 42.2 (2.30 – 4.30, 16.6 – 31.1)	31.4 – 51.0 (3.20 – 5.20, 23.1 – 37.6)
	10	27.5 – 47.1 (2.80 – 4.80, 20.3 – 34.7)	51.0 – 86.3 (5.20 – 8.80, 37.6 – 63.7)	62.8 – 107.9 (6.40 – 11.00, 46.3 – 79.6)
Fig. 1-9	12	52.0 – 85.3 (5.30 – 8.70, 38.3 – 62.9)	88.3 – 156.9 (9.00 – 16.00, 65.1 – 115.7)	117.7 – 196.1 (12.00 – 20.00, 86.8 – 144.7)
TC-003	4	1.2 – 2.2 (0.12 – 0.22, 0.9 – 1.6)		
	5	2.5 – 4.4 (0.25 – 0.45, 1.8 – 3.3)		
	6	4.4 – 7.4 (0.45 – 0.75, 3.3 – 5.4)		
	8	9.8 – 17.7 (1.00 – 1.80, 7.2 – 13.0)	17.7 – 31.4 (1.80 – 3.20, 13.0 – 23.1)	23.5 – 39.2 (2.40 – 4.00, 17.4 – 28.9)
Fig. 1-10 Including bolt or nut with washer or spring washer only	10	22.6 – 36.3 (2.30 – 3.70, 16.6 – 26.8)	37.3 – 66.7 (3.80 – 6.80, 27.5 – 49.2)	48.1 – 83.4 (4.90 – 8.50, 35.4 – 61.5)
	12	39.2 – 64.7 (4.00 – 6.60, 28.9 – 47.7)	68.6 – 117.7 (7.00 – 12.00, 50.6 – 86.8)	88.3 – 147.1 (9.00 – 15.00, 65.1 – 108.5)

Note: The mark is embossed on the bolt head as follows:

4T ——— 4 9T ——— 9
5T ——— 5 10T ——— 10
7T ——— 7

Downloaded from www.Manualslib.com manuals search engine

1-8. Opening Engine Hood

1) Engine hood can be lifted slightly by pulling engine hood lock release located at the lower area of instrument panel.

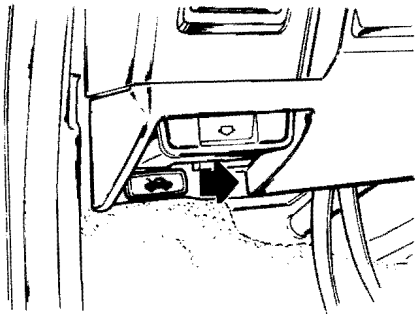

OM-502

Fig. 1-11 Engine hood lock release

2) Push up safety catch with hood pushed down slightly and unlock it.

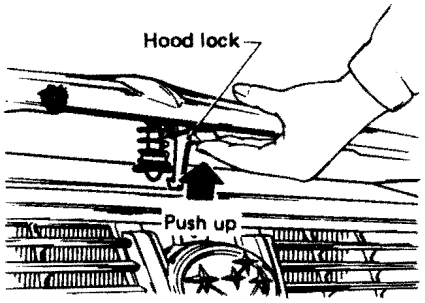

OM-503

Fig. 1-12 Releasing hood lock

3) Lift hood and unfasten stay from holder and put the top of stay into the stopper on hood.

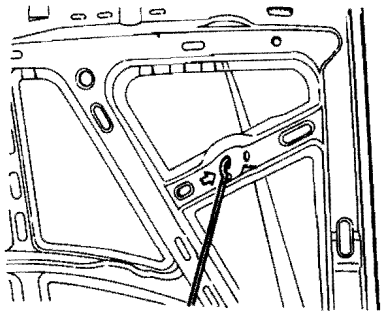

A1-064

Fig. 1-13 Setting the stay

4) If engine hood needs to be opened wider than normal position, remove stay and set it as shown in figure.

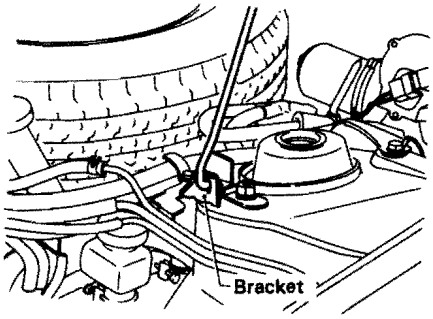

A1-063

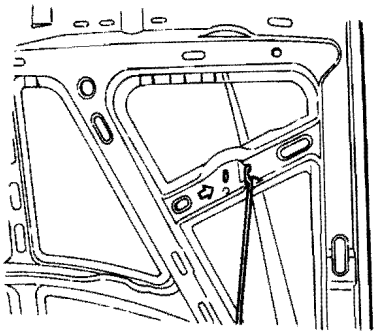

A4-161

Fig. 1-14 Setting the stay

5) When closing engine hood, detach stay with hood lifted slightly.
After setting stay on holder, lower hood.
Then push down the front end of hood to lock it.

NOTE:
Make sure that the hood is locked completely before driving.

1-9. Lifting Points and Procedure

1. Pantograph Jack

- Mark shows each pantograph jack setting positions.

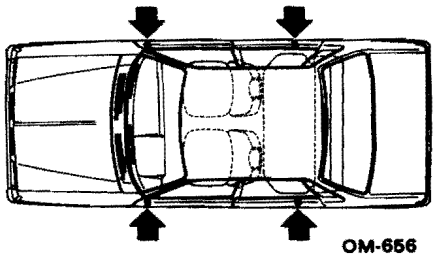

OM-656

Fig. 1-15 Lifting points

NOTE:

a. Never get under the vehicle while it is supported only by the jack. Always use safety stands to support body when you have to get under the car.

b. Block the wheels diagonally by wheel chocks.

c. Make sure the jack is set at the correct position on the flange of side sill.

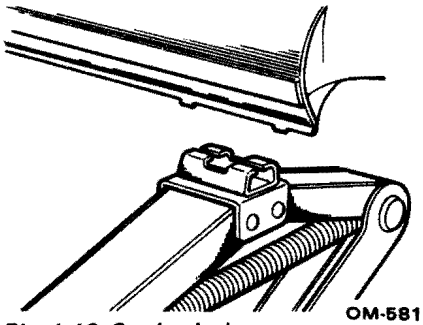

OM-581

Fig. 1-16 Setting jack

Downloaded from www.Manualslib.com manuals search engine

2. Garage Jack

Front

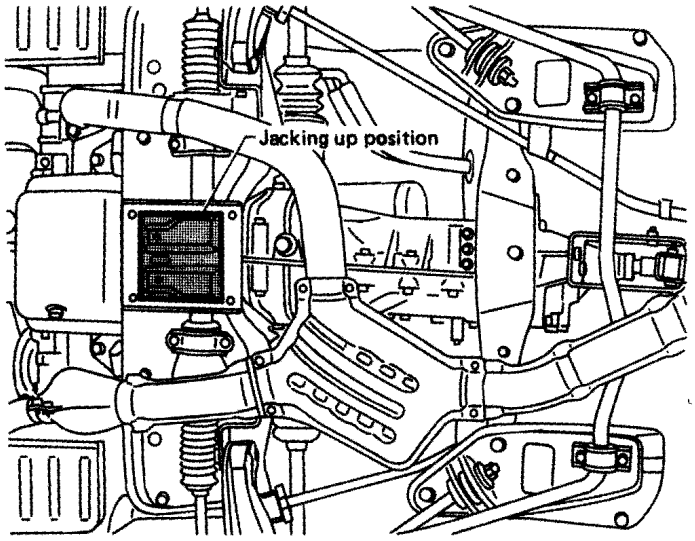

Fig. 1-17

A1-076

Rear

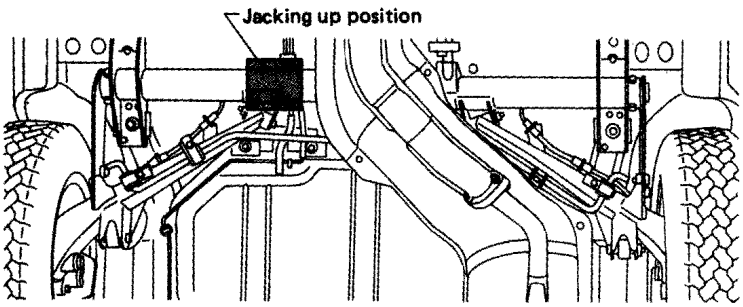

A1-077

Fig. 1-18

NOTE:

a. When jacking up the vehicle, place chocks to hold wheels.

b. After jacking up the vehicle with garage jack, be sure to support the vehicle with safety stands for safety.

c. Make sure the stands are set at the correct position on the flange of side sill. (The same setting positions as those of pantograph jack)

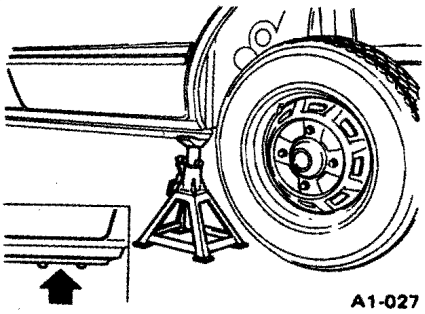

Correct position

A1-027

Fig. 1-19

d. For rear lifting points of 4WD, apply garage jack under rear differential.

3. Lift

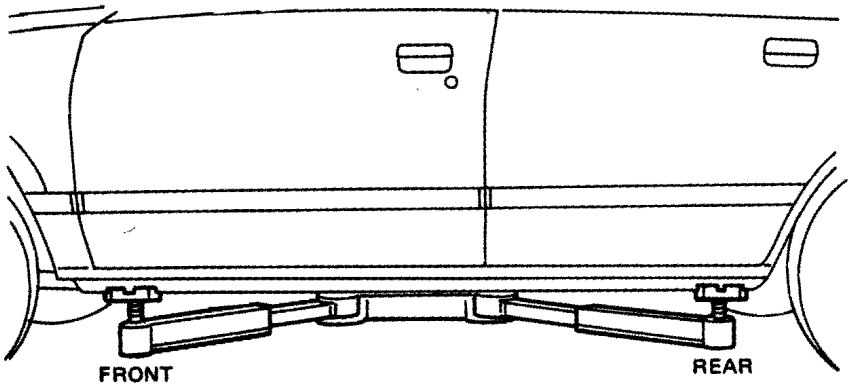

A1-078

Fig. 1-20

NOTE:

Be sure to lift vehicle at the same four positions as those of pantograph jack.

Downloaded from www.Manualslib.com manuals search engine

1-10. Towing Hooks

Towing hooks are provided in front and rear ends of vehicle.

	Front		Rear	
	Right	Left	Right	Left
Hatchback Sedan Hardtop	●	●	●	–
Station Wagon BRAT	●	●	●	–

● : installed
– : not installed

● Front

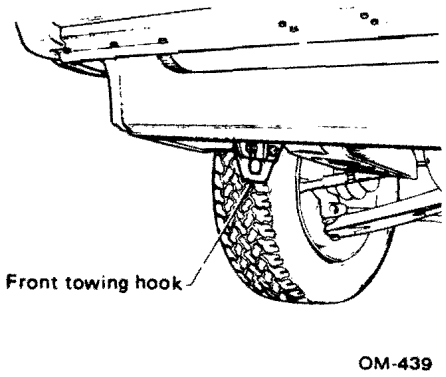

Fig. 1-21

● Rear
(Hatchback, Sedan and Hardtop)

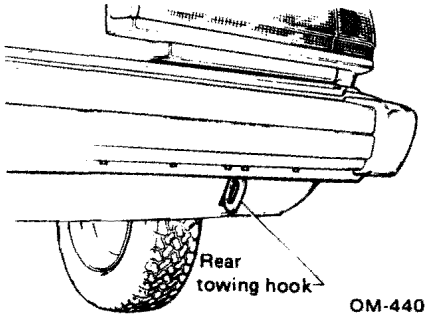

Fig. 1-22

(Station Wagon and BRAT)

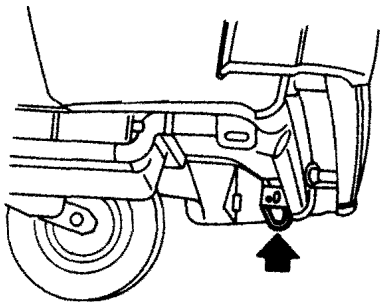

Fig. 1-23

NOTE:
When towing the vehicle, pay attention to the following.

a. Before towing the car, make certain that the parking brake is released and transmission is in neutral.
b. Never turn the ignition key to the "LOCK" position while the car is being towed.
c. When the Automatic transmission vehicle is being towed with the front wheels on the ground, place the selector lever in "N" position and do not exceed 30 km/h (20 MPH).
Whenever towing the car more than 10 km (6 miles) distance, tow the car with the front wheels raised off the ground. In case of an inoperative transmission, always tow it with the front wheels raised off the ground.
d. Avoid towing another car with front towing hooks.
e. Not only towing hooks but also other body parts might be damaged if pulling too quickly the rope winded round the hooks and if pulling strongly the rope side ways against the hook.
f. Never use tie down tabs for towing.

Downloaded from www.Manualslib.com manuals search engine

CHAPTER 2

PERIODIC MAINTENANCE SERVICES

Page

2–1. SCHEDULE OF MAINTENANCE SERVICES 2– 2

2–2. PROCEDURES OF MAINTENANCE SERVICES 2– 3

1. Intake and Exhaust Valve Clearances 2– 3
2. Drive Belt 2– 4
3. Cylinder Head Nuts, Bolts and Intake Manifold Bolts 2– 4
4. Engine Oil 2– 5
5. Engine Oil Filter 2– 6
6. Engine Coolant 2– 6
7. Cooling System, Hoses and Connections 2– 6
8. Engine Idle Speed 2– 6
9. Choke Mechanism Lubrication 2– 7
10. Fuel Filter 2– 7
11. Fuel and Evaporative System Hoses and Connections 2– 7
12. Air Filter Elements (Air Cleaner, P.C.V. Air Filter) 2– 9
13. Spark Plugs 2– 9
14. Transmission Oil 2– 9
15. Engine Oil, Transmission Gear Oil and Differential Gear Oil for Leaks 2–10
16. Automatic Transmission Fluid 2–10
17. Differential Gear Oil (Automatic Transmission) 2–11
18. Rear Differential Gear Oil (4WD Vehicle) 2–11
19. Brake Fluid 2–12
20. Disc Brake Pad and Disc 2–13
21. Brake Lining and Drum 2–13
22. Brake System for Leaks or Damage 2–14
23. Brake System, Parking Brake and Brake Servo System Operations... 2–14
24. Cups and Dust Seals of Master Cylinder and Wheel Cylinders 2–15
25. Lubricate Front Disc Caliper 2–15
26. Vacuum Hose and Check Valve of Brake Servo System 2–16
27. Clutch and Hill Holder Systems 2–16
28. Steering System, Front and Rear Axle Boots 2–17
29. Power Steering System 2–18
30. Suspension (Ball Joint and Dust Cover) 2–20
31. Grease on Front and Rear Wheel Bearings 2–20
32. Wheel Alignment 2–21
33. Retighten Wheel Nuts 2–21
34. Headlight Aiming 2–22
35. Lubricate Hinges and Locks of Doors, Hood and Trunk Lid 2–23

2–3. SPECIAL TOOLS 2–23

SUBARU

Downloaded from www.Manualslib.com manuals search engine

2-1. Schedule of Maintenance Services

Symbols used
- A : Adjust
- R : Replace
- I : Inspect, correct or replace if necessary
- P : Perform
- E : Item for emission control system
- (I) or (R) : Recommended service for safe vehicle operation

		MAINTENANCE ITEM	MAINTENANCE INTERVAL [Number of months or km (miles) whichever occurs first]									
			Months		7.5	15	22.5	30	37.5	45	52.5	60
			x1000 km	1.6	12	24	36	48	60	72	84	96
			x1000 miles	1	7.5	15	22.5	30	37.5	45	52.5	60
E	1	Intake and exhaust valve clearance (Except hydraulic valve lifter equipped engines)	I			I		I		I		I
E	2	Drive belt	A			(I)		(I)		(I)		(I)
E	3	Retighten cylinder head nuts and manifold bolts	P									
E	4	Engine oil			R	R	R	R	R	R	R	R
E	5	Engine oil filter			R	R	R	R	R	R	R	R
E	6	Engine coolant				(I)		(R)		(I)		(R)
E	7	Cooling system, hoses and connections						(I)				(I)
E	8	Engine idle speed	I									
E	9	Choke mechanism lubrication						P				P
E	10	Fuel filter				(R)		(R)		(R)		(R)
E	11	Fuel and evaporative system hoses and connections						(I)				(I)
E	12	Air filter elements (air cleaner, PCV air filter)						R				R
E	13	Spark plugs						R				R
	14	Transmission oil				I		R		I		R
	15	Engine oil, transmission gear oil and differential gear oil for leaks				I		I		I		I
	16	Automatic transmission fluid				I		R		I		R
	17	Differential gear oil (automatic transmission)			I	I	I	R	I	I	I	R
	18	Rear differential gear oil (4WD vehicle)				I		R		I		R
	19	Brake fluid				R		R		R		R
	20	Disc brake pad and disc			I	I	I	I	I	I	I	I
	21	Brake lining and drum						I				I
	22	Brake system for leaks or damage	I			I		I		I		I
	23	Brake system, parking brake and brake servo system operation				I		I		I		I
	24	Cups and dust seals of master cylinder and wheel cylinders						R				R
	25	Lubricate front disc caliper				P		P		P		P
	26	Vacuum hose and check valve of brake servo system						I				I
	27	Clutch and hill-holder systems	A		I	I	I	I	I	I	I	I
	28	Steering system, front and rear axle boots			I	I	I	I	I	I	I	I

Downloaded from www.Manualslib.com manuals search engine

MAINTENANCE ITEM			Months		7.5	15	22.5	30	37.5	45	52.5	60
			x1000 km	1.6	12	24	36	48	60	72	84	96
			x1000 miles	1	7.5	15	22.5	30	37.5	45	52.5	60
	29	Power steering system		I						I		
	30	Suspension (ball joint and dust cover)				I		I		I		I
	31	Grease on front and rear wheel bearings						I				I
	32	Wheel alignment						I				I
	33	Retighten wheel nuts		P		P		P		P		P
	34	Headlight aiming						I				I
	35	Lubricate hinges and locks of doors, hood and trunk lid				P		P		P		P

NOTE:
When operating your vehicles under any of following conditions, change the engine oil every 6,000 km (3,750 miles) or 3 months whichever occurs first.
- **Operation in extremely cold weather**
- **Repeated short trips**
- **Driving on dusty roads**

2-2. Procedures of Maintenance Services

To maintain the best performance of vehicle and to drive safely, periodic maintenance services must be performed at least at the designated intervals and strictly in the correct procedures.
And also use the SUBARU genuine parts whenever replacing parts.
At the specified intervals, inspect, replace or adjust each item as follows.

Standard of valve clearance (when engine is cold)		
	All models except those with hydraulic lifter	Hydraulic lifter equipped models
Intake	0.23 – 0.27 mm (0.009 – 0.011 in)	0 mm (0 in)
Exhaust	0.33 – 0.37 mm (0.013 – 0.015 in)	0 mm (0 in)

1. Intake and Exhaust Valve Clearances

NOTE:
It is not necessary to adjust valve clearances on hydraulic lifter equipped models.

1) Bring piston of cylinder to the top dead center at compression stroke.
2) Insert a thickness gauge between valve stem and rocker arm to measure the valve clearance.
3) To adjust the clearance, use Valve Clearance Adjuster (498767000).
Loosen locknuts and turn adjusting screws to obtain the specified valve clearance.

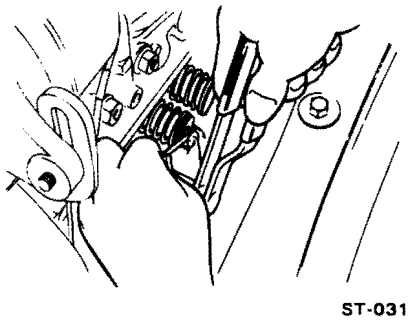

Fig. 2-1 Adjusting valve clearances

4) Tighten locknuts.

Torque	14 – 18 N·m (1.4 – 1.8 kg-m, 10 – 13 ft-lb)

5) Adjust each valve clearance according to the following sequence.

Cylinder number
#1 → #3 → #2 → #4

Downloaded from www.Manualslib.com manuals search engine

6) Recheck the valve clearances on both sides after rotating crankshaft several times.

NOTE:

a. Adjust the valve clearances when the engine is cold with its coolant temperature between 20 and 40°C (68 and 104°F).

b. When making the adjustment within the first maintenance interval, retighten the cylinder head nuts in advance.

2. Drive Belt

• Alternator belt

Alternator belt tension
13 – 14 mm (0.51 – 0.55 in)/ 98 N (10 kg, 22 lb)

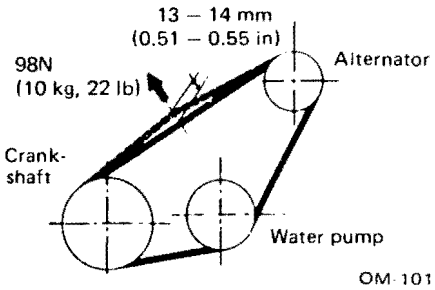

Fig. 2-2 Alternator belt tension

1) Inspect alternator belt tension, and adjust it if necessary as follows. Loosen alternator mounting bolt and change alternator installing position so as to obtain the specified belt tension.

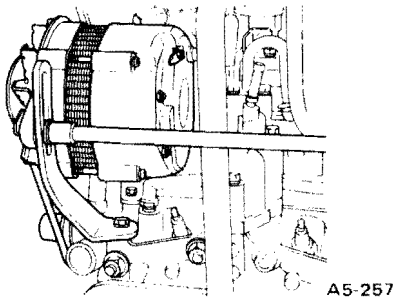

Fig. 2-3 Tightening alternator mounting bolt

2) Wipe off any oil or water on belt and pulleys.

3) Replace belt if crack or other damage is found.

NOTE:

When replacing belt with new one, adjust its tension to 10 mm (0.39 in)/ 98 N (10 kg, 22 lb).

• Oil pump belt for power steering

Oil pump belt tension
15 – 20 mm (0.59 – 0.79 in)/ 98 N (10 kg, 22 lb)

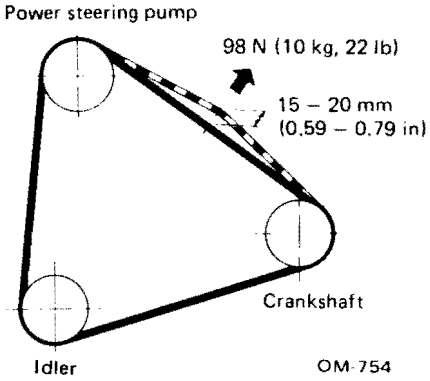

Fig. 2-4 Oil pump belt tension for power steering

1) Inspect oil pump belt tension for power steering and adjust it if necessary as follows.

(1) Loosen lock bolt installing idler after taking out idler cap, and then turn adjust bolt so as to obtain the specified belt tension.

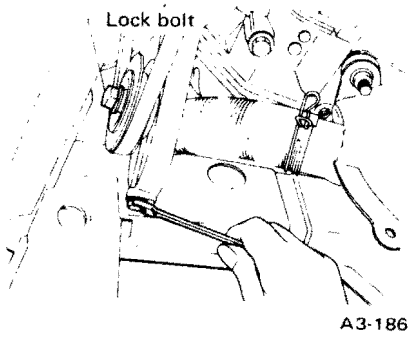

Fig. 2-5 Turning adjust bolt

(2) Retighten idler lock bolt and install idler cap.

Torque (Idler lock bolt)	20 – 29 N·m (2 – 3 kg-m, 14 – 22 ft-lb)

NOTE:

a. When installing idler cap, turn it while pushing. If not available to do so, apply grease on lip of idler cap and try to install it again.

b. Make sure to install idler cap securely by turning it.

2) Wipe off any oil or water on belt, pulley and idler.

3) Replace belt if crack or other damage is found.

3. Cylinder Head Nuts, Bolts and Intake Manifold Bolts

1) Remove both sides of valve rocker covers.

2) Loosen the three bolts securing the intake manifold on the #1 – #3 cylinder head by 60°. The other manifold bolts on the #2 – #4 cylinder head side should be intact.

3) Loosen No.1 nut on cylinder head by around 60° and apply sufficient engine oil to its thread portion as shown in figure.

After repeating 4 to 5 times of loosening and tightening operation in the range of 60°, retighten the No.1 nut to the specified torque.

NOTE:

Do not loosen the nut more than 90°, since water leak might occur.

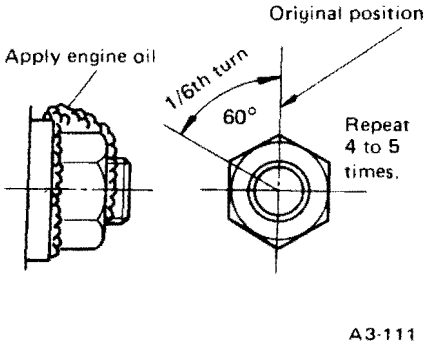

Fig. 2-6 Loosening nut and applying engine oil

Downloaded from www.Manualslib.com manuals search engine

Torque	64 N·m (6.5 kg-m, 47 ft-lb)

4) Retighten all nuts in the sequence shown in figure with same manner.

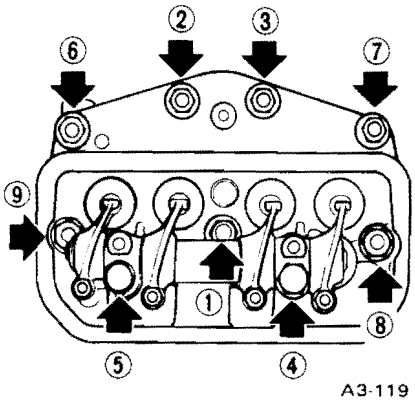

Fig. 2-7 Tightening sequence for cylinder head nuts and bolts

NOTE:

a. As a rule, retightening operation should be carried out when engine is in cold condition below 40°C (104°F).

b. Use Socket Wrench (499987006) to retighten No.1 and No.9 nuts.

c. Use Socket Wrench (899988607) to retighten No. 4 and 5 bolts.

d. Retightening procedure for the nuts should be carried out one by one.

5) After tightening all nuts, retighten No. 1 nut again to the specified torque without loosening.

6) Also tighten all nuts on another side cylinder head with the same manner.

7) Retighten the intake manifold bolts on the #1 – #3 cylinder head side to the specified torque.

Torque	18 – 22 N·m (1.8 – 2.2 kg-m, 13 – 16 ft-lb)

8) Adjust the intake and exhaust valve clearances when engine is cold. (Except hydraulic lifter equipped models)

Intake valve	0.23 – 0.27 mm (0.009 – 0.011 in)
Exhaust valve	0.33 – 0.37 mm (0.013 – 0.015 in)

9) Install the rocker covers.

Torque	3 – 4 N·m (0.3 – 0.4 kg-m, 2.2 – 2.9 ft-lb)

4. Engine Oil

1) Drain engine oil by loosening engine oil drain plug.

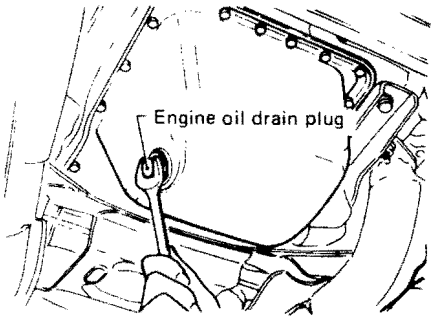

Fig. 2-8 Draining engine oil

2) Open engine oil filler cap for quick draining the engine oil.

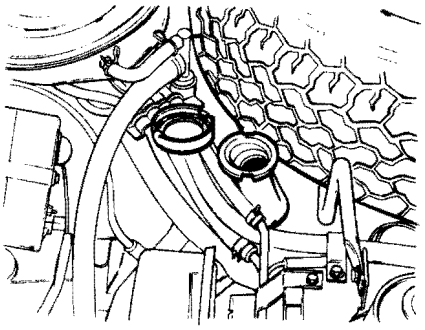

Fig. 2-9 Engine oil filler cap

3) Tighten engine oil drain plug after draining engine oil.

Torque	25 N·m (2.5 kg-m, 18 ft-lb)

4) Fill engine oil through filler pipe up to upper point on level gauge. Make sure that vehicle is placed level when checking oil level. Use engine oil of proper quality and viscosity, selected in accordance with the next table.

ITEM	API Classification	SAE Viscosity No. and Applicable Temperature
		(°F) 30° 0° 30° 60° 90°
		(°C) -34° -18° 0° 16° 32°
Engine oil	SE	40; 30, 20W-40, 20W-50; 10W-30, 10W-40, 10W-50
	SF	5W-30
		(5W-30 oil is not recommended for sustained high speed driving.)

The proper viscosity helps car get good cold and hot starting by reducing viscous friction and thus increasing cranking speed.

NOTE:

Each oil manufacturer has its own base oil and additives.

Thus, do not mix two or more oils of different brands.

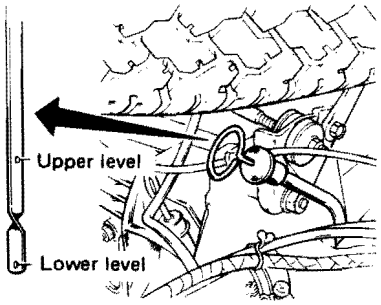

Fig. 2-10 Checking engine oil level

Downloaded from www.Manualslib.com manuals search engine

Engine oil capacity		
	1800 cc Engine	1600 cc Engine
Upper level	4.0 ℓ (4.2 USqt 3.5 Impqt)	3.5 ℓ (3.7 USqt 3.1 Impqt)
Lower level	3.0 ℓ (3.2 USqt 2.6 Impqt)	2.5 ℓ (2.6 USqt 2.2 Impqt)

5) Close engine oil filler cap.
6) Start engine and warm it up for a time.
7) After stop engine, recheck the oil level.
If necessary, add the engine oil up to upper point on level gauge.

5. Engine Oil Filter

1) Remove oil filter with an oil filter wrench.
2) Get a new oil filter and apply a thin coat of engine oil to the seal rubber.
3) Install oil filter by turning it with hand, being careful not to damage seal rubber.
4) Tighten more approximately two thirds turn after the seal rubber contacts the oil pump case. Do not tighten excessively, or oil may leak.
5) After installing oil filter, run engine and make sure that no oil is leaking around seal rubber.

NOTE:
The filter element and filter case are permanently joined; therefore, interior cleaning is not necessary.

6. Engine Coolant

• Inspecting

Inspect that the coolant level is above level plate by removing radiator cap. Top up coolant to level plate if the coolant level is 10 mm (0.39 in) or more below it.

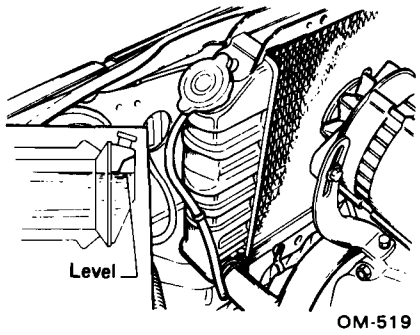

Fig. 2-11 Inspecting coolant level

NOTE:
a. The radiator is of the pressurized type. Do not attempt to open the radiator cap immediately after the engine has been stopped.
b. The SUBARU Coolant containing anti-freeze and anti-rust agents is especially made for SUBARU engine, which has an aluminum crankcase. Always use SUBARU Coolant, since other coolant may cause corrosion.

• Replacing

1) Put heater control knob on instrument panel to heat position.
2) Loosen coolant drain cock after installing hose onto drain plug, and drain coolant.

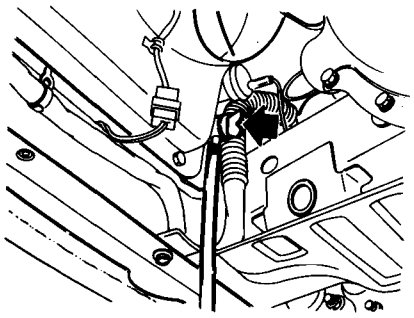

Fig. 2-12 Draining coolant

3) Open radiator cap for quick draining coolant.
4) Tighten drain cock firmly.
5) Fill the SUBARU coolant up to level plate.

Coolant capacity	
1800 cc Engine	1600 cc Engine
Approx. 5.5 ℓ (5.8 US qt 4.8 Imp qt)	Approx. 5.3 ℓ (5.6 US qt 4.7 Imp qt)

6) Install radiator cap and close firmly.
7) Start engine and warm it up for a time.
8) Stop engine, and wait until the engine temperature is decreased.
9) Inspect the coolant level.
If necessary, add coolant up to level plate.

7. Cooling System, Hoses and Connections

1) Check the components of the cooling system and each connection for leak.
2) If the coolant temperature exceeds 86.5 to 89.5°C (188 to 193°F) while radiator is not so hot, check thermostat.
3) If thermostat does not open at 86.5 to 89.5°C (188 to 193°F), replace it with a new one.
4) If electric fan does not operate with coolant temperature above 93 to 97°C (199 to 207°F), check thermoswitch or fan motor.
5) If radiator hoses are damaged, replace with new ones.
6) If by-pass hoses or overflow tube are clogged, clean the inside of hoses or tube with cleaning oil.

8. Engine Idle Speed

NOTE:
Inspection of engine idle speed should be carried out after inspection of intake and exhaust valve clearances. (Except hydraulic lifter equipped models)

Downloaded from www.Manualslib.com manuals search engine

1) Disconnect purge hose from pipe and clog hose with plug or the like.

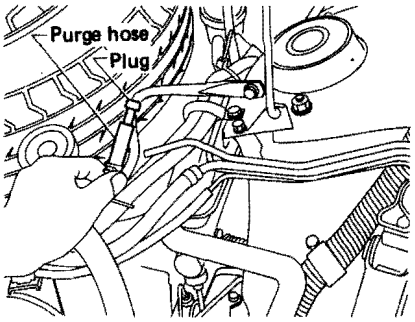

A3-254

Fig. 2-13

2) Start engine and warm it up for 5 minutes or more.
3) Inspect idle speed.

Idling speed (rpm)	
All models except automatic transmission vehicle	700 ± 100
Automatic transmission vehicle	800 ± 100

[At neutral (or N) or P position]

9. Choke Mechanism Lubrication

Lubricate choke linkage and other operating parts.

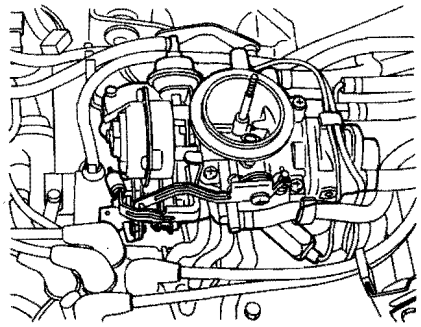

A3-255

Fig. 2-14

10. Fuel Filter

Fuel filter cannot be disassembled as it is of the cartridge type.

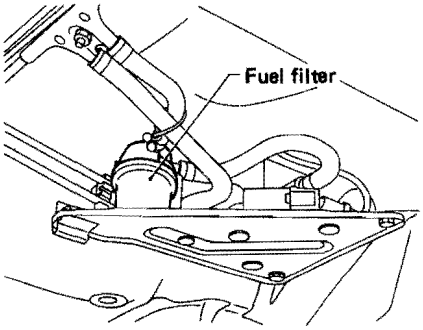

A3-256

Fig. 2-15

11. Fuel and Evaporative System Hoses and Connections

1) Fuel piping and connections
Check fuel piping and connections for leakage.
2) Evaporative emission system
(1) Evaporation line from fuel tank to canister.
a. Remove fuel filler cap.
b. Disconnect evaporation line at evaporation pipe CP.
c. Check for unobstructed evaporation line on fuel tank side except for a little resistance due to 2-way valve by blowing air into hose.
d. Check for unobstructed evaporation line on canister side with no resistance by blowing air into hose.

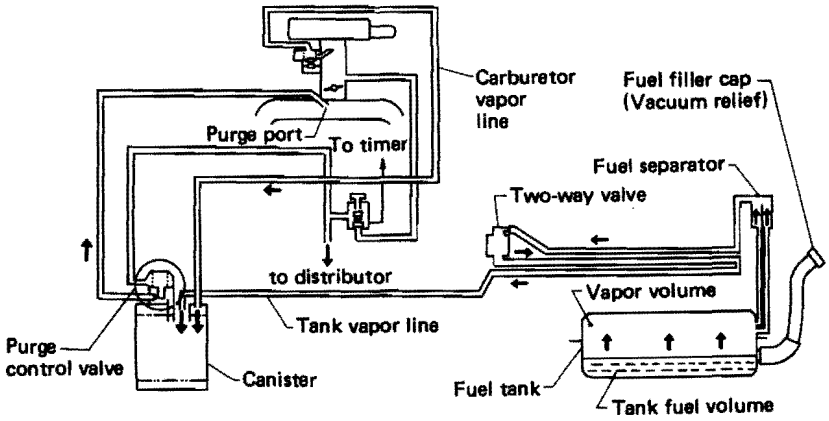

A3-257

Fig. 2-16 Evaporation line

(2) Two way valve
a. Check for air passage with slight resistance due to the valve by blowing air into the nipple on the side marked with letters "To engine".
b. Repeat the same step on the other nipple.
c. Check for the valve case with no crack. If cracked, replace it with new one.

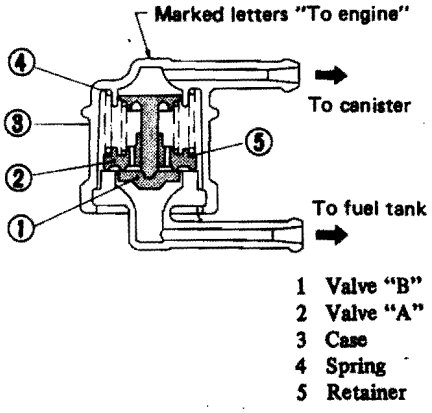

A3-192

Fig. 2-17 Two way valve

Downloaded from www.Manualslib.com manuals search engine

(3) Purge line

a. Disconnect purge hose from the pipe CP ①.

b. Check for unobstacled line by blowing air into the hose.

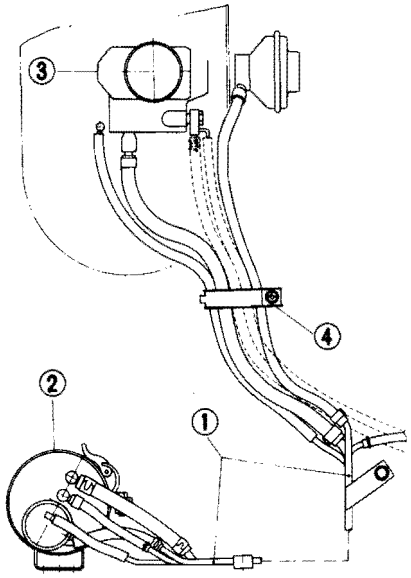

A3-258

1 Pipe CP
2 Canister
3 Carburetor
4 Hose clamp

Fig. 2-18 Purge line

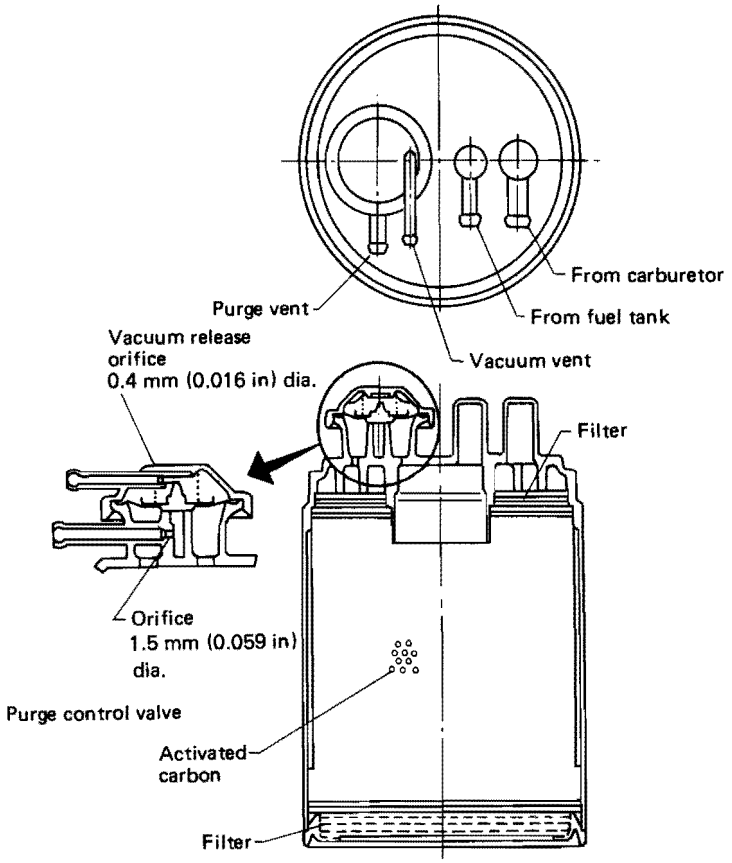

Fig. 2-19

A3-259

(4) Canister

a. Disconnect vacuum vent hose from pipe CP ①. Then check for no air leak of vacuum chamber for purge control valve in canister by blowing into hose. If air can be blown into canister, replace it with new one because disphragm is broken.

b. Disconnect two hoses of carburetor vapor line and tank vapor line from pipe CP ①. Then check for air passage by blowing lightly in it. If air does not pass, replace canister with new one.

c. Disconnect hose of purge line from pipe CP ①.
Check for air passage by blowing in it. If air passes, replace canister with new one.

d. If canister case is cracked, replace it with new one.

(5) Vacuum switching valve and thermo valve (California models and non-4WD of non-California models)

a. After the engine has cooled below 50°C (122°F), disconnect the hose ③ from the vacuum switching valve ①. Blow through the open end of the hose to ensure there is no air flow at the port in the thermo valve ②. If there is air flow, replace the thermo valve.

b. After the engine has warmed above 64°C (147°F), disconnect the hose ③ from the vacuum switching valve ①. Blow through the open end of the hose to check if there is air flow at the port in the thermo valve. If there is no air flow, replace the thermo valve.

c. Disconnect the hoses ③ and ④ from the vacuum switching valve ①. Blow through the nipple of the vacuum switching valve on the carburetor side to ensure there is no leakage. Similarly, blow through the nipple on the thermo valve side to ensure there is no leakage. In either case, if there is a leak, replace the vacuum switching valve.

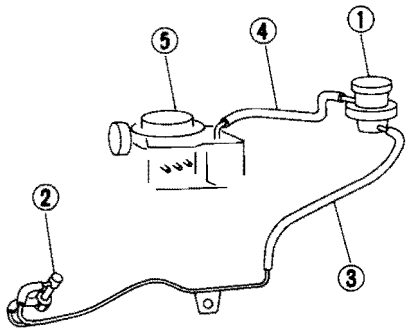

A3-260

1 Vacuum switching valve
2 Thermo valve
3 Hose
4 Hose
5 Carburetor

Fig. 2-20

Downloaded from www.Manualslib.com manuals search engine

d. After the temperature of engine coolant has reached 64°C (147°F) or more, disconnect the hose ④ from the vacuum switching valve. With the engine running, blow through the nipple on the carburetor side to ensure there is air flow. If there is not, replace the vacuum switching valve.

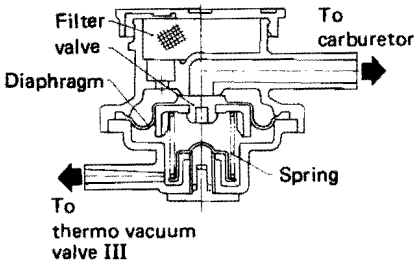

Fig. 2-21 Vacuum switching valve

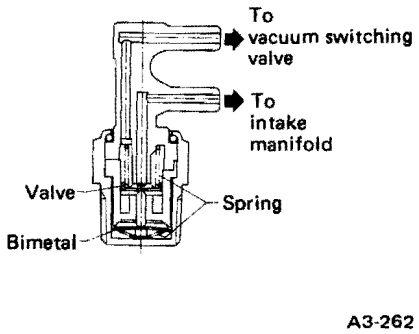

Fig. 2-22 Thermo vacuum valve III

12. Air Filter Elements (Air Cleaner P.C.V. Air Filter)

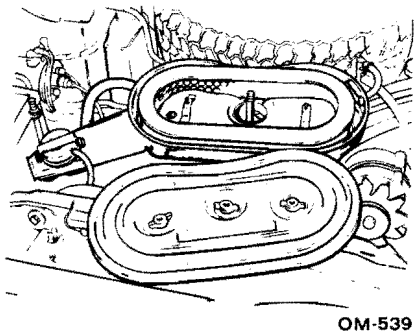

Fig. 2-23 Air cleaner element

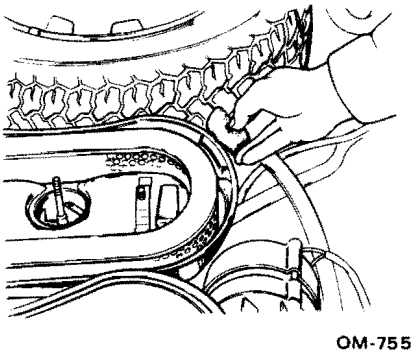

Fig. 2-24 P.C.V. air filter

NOTE:

Do not attempt to clean the air cleaner element.

The filter paper of the element is wetted with a special noninflammable slow-evaporating viscous liquid. It is resistant to cold weather and has a long service life. Dirt adhering to this filter paper forms porous laminations with the viscous liquid, which function as a filtration layer to reduce dust penetration into the filter paper. If this filter paper is cleaned, the filtration layer thus formed will be lost along with the viscous liquid.

13. Spark Plugs

Recommended spark plugs	
For U.S.A.	NGK: BPR6ES-11 (or BPR5ES-11, BPR7ES-11) Nippondenso: W20EPR-U11 (or W16EPR-U11, W22EPR-U11) Champion: RN9YC-4 (or RN11YC-4)
For Canada	Champion: RN9YC-4 (or RN11YC-4)

Spark plug gap
1.0 – 1.1 mm (0.039 – 0.043 in)

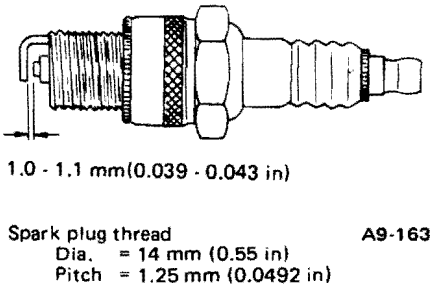

Fig. 2-25 Spark plug

When installing spark plugs on cylinder head, tighten them to the specified torque.

Torque	18 – 24 N·m (1.8 – 2.4 kg-m, 13 – 17 ft-lb)

NOTE:

a. Be sure to place the gasket between the cylinder head and spark plug.

b. When replacing the spark plug on #4 cylinder head, be careful about the air suction manifold switch maybe hot.

14. Transmission Oil

NOTE:

Use transmission gear oil of proper quality and viscosity that is selected in accordance with the next table.

Recommended oil

ITEM	API Classification	SAE Viscosity No. and Applicable Temperature
• Transmission and differential gear oil • 4WD rear differential gear oil	GL-5	(°F) −30° 0° 30° 60° 90° (°C) −34° −18° 0° 16° 32° 90 85W 80W

NOTE:

Each oil manufacturer has its base oil and additives. Thus, do not mix two or more brands.

Downloaded from www.Manualslib.com manuals search engine

- **Inspecting**

Inspect the transmission gear oil level. If the oil level is at the lower point or below, add some oil through the oil level gauge hole up to the upper point of gauge.

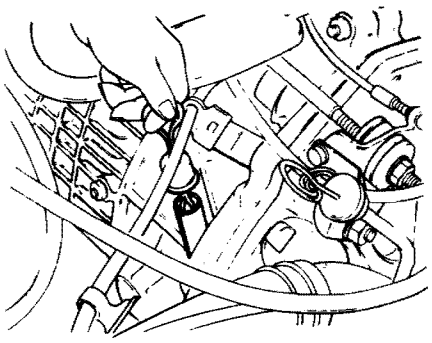

OM-515

Fig. 2-26

- **Replacing**

1) Drain oil by removing drain plug.

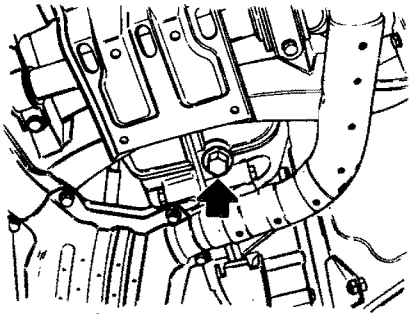

OM-746

Fig. 2-27

2) Reinstall drain plug after draining oil and tighten it to the specified torque.

Torque	44 N·m (4.5 kg-m, 33 ft-lb)

NOTE:

a. Be sure to place a gasket between the transmission case and drain plug.

b. Replace the gasket with new one.

3) Fill transmission gear oil through the oil level gauge hole up to upper point on level gauge.

Capacity	
4-speed and 5-speed (except 4WD)	2.7 ℓ (2.9 US qt, 2.4 Imp qt)
4WD	3.0 ℓ (3.2 US qt, 2.6 Imp qt)

15. Engine Oil, Transmission Gear Oil and Differential Gear Oil for Leaks

Inspect the underside of engine, transmission gear case and differential gear case (include 4WD rear differential gear case).

If the oil leaks are found, correct them.

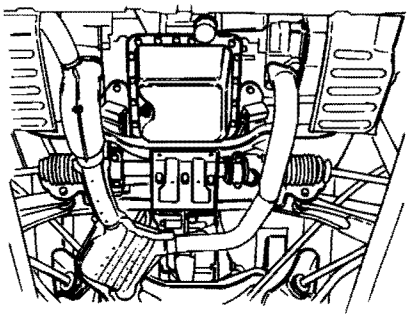

OM-748

Fig. 2-28 Inspecting oil leaks

16. Automatic Transmission Fluid

- **Inspecting**

1) Drive vehicle several miles to bring automatic transmission fluid (ATF) up to normal operating temperature. Normal operating temperature is 60 to 80°C (140 to 176°F).

2) Park vehicle on a level surface.

3) Place selector lever in "P" position and run engine on at idling speed.

4) Remove level gauge and wipe it clean.

5) Reinsert the level gauge all the way.

6) Remove it again and note reading. If the fluid level is below the lower limit mark, add recommended ATF until the fluid level is within the specified range (within upper and lower limit marks). When transmission is hot, the level should be above the center of upper and lower marks, and when it is cold, the level should be below the center of these two marks.

ATF level gauge hole also serves as fluid filler.

NOTE:

Do not fill the fluid above upper point of level gauge.

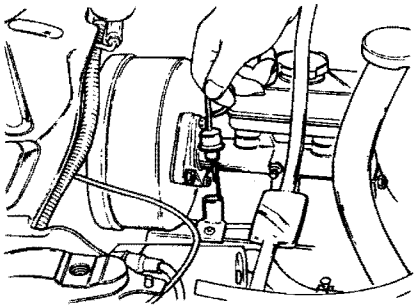

A3-244

Fig. 2-29

Recommended automatic transmission fluid (ATF Dexron)

B.P.	B.P. Autran DX
CALTEX	Texamatic fluid 6673 Dexron
CASTROL	CASTROL TQ Dexron
MOBIL	Mobil ATF 220
TEXACO	Texamatic Fluid 6673 Dexron

Downloaded from www.Manualslib.com manuals search engine

- **Replacing**

1) Drain fluid by removing drain plug.

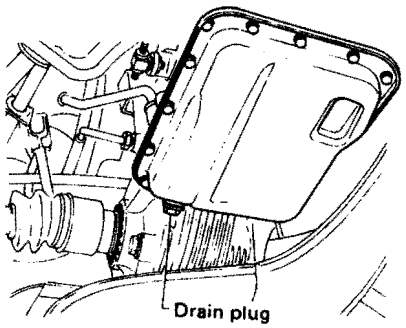

Fig. 2-30 OM-335

2) Reinstall drain plug after draining fluid, and tighten it to the specified torque.

Torque	25 N·m (2.5 kg-m, 18 ft-lb)

NOTE:
a. Be sure to place a gasket between oil pan and drain plug.
b. Replace the gasket with new one.

3) Fill ATF through the fluid level gauge hole.

Capacity	
Non-4WD AT	5.6 – 6.0 ℓ (5.9 – 6.3 US qt, 4.9 – 5.3 Imp qt)
4WD AT	6.0 – 6.4 ℓ (6.3 – 6.8 US qt, 5.3 – 5.6 Imp qt)

NOTE:
When replacing ATF, the normal refilling capacity is 4.0ℓ (4.2 US qt, 3.5 Imp qt).

4) Check the ATF level according to the above inspection procedure 1) to 6).

17. Differential Gear Oil (Automatic Transmission)

- **Inspecting**

Oil level should be maintained between two points on the level gauge. If the oil level is at lower point or below, add some oil up to upper point.

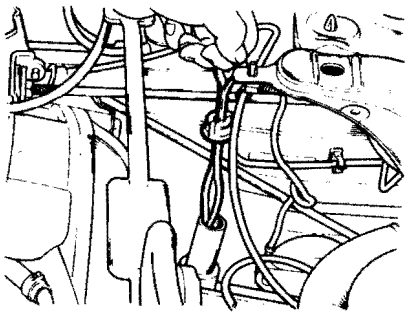

Fig. 2-31 OM-516

- **Replacing**

1) Drain oil by removing drain plug.

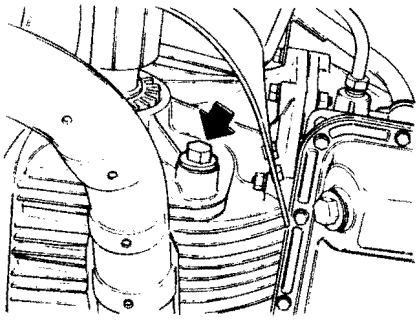

OM-747

Fig. 2-32

2) Reinstall drain plug after draining oil, then tighten it to the specified torque.

Torque	25 N·m (2.5 kg-m, 18 ft-lb)

NOTE:
a. Be sure to place a gasket between the differential gear case and the drain plug.
b. Replace the gasket with new one.

3) Fill differential gear oil through the oil level gauge hole up to upper point on the level gauge.

Capacity	1.2 ℓ (1.3 US qt, 1.1 Imp qt)

18. Rear Differential Gear Oil (4WD Vehicle)

- **Inspecting**

Remove plug of filler hole and check the oil level. Oil level should be maintained fully to the mouth of filler hole.
If the oil level is below the mouth of filler hole, add some oil up to the mouth.

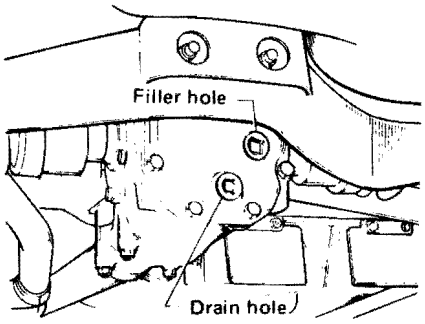

OM-517

Fig. 2-33

- **Replacing**

1) Drain oil by removing drain plug.
2) After installing drain plug onto rear differential gear case firmly, fill oil up fully to the mouth of filler hole.

Capacity	0.8 ℓ (0.8 US qt, 0.7 Imp qt)

3) Install filler hole plug onto rear differential gear case firmly.

Downloaded from www.Manualslib.com manuals search engine

19. Brake Fluid

1) Either jack up the front end of vehicle and place a safety stand under it, or drive vehicle onto the pit and then jack up the front end.
2) Remove both left and right front wheels.
3) Remove filler cap from brake fluid tank.
Install one end of a vinyl tube onto the air bleeder of master cylinder and insert the other end of the tube into a container to collect the brake fluid.
To drain fluid into container, open the air bleeder and repeatedly depress and release the brake pedal until a small amount of fluid remains in the reservoir tank.

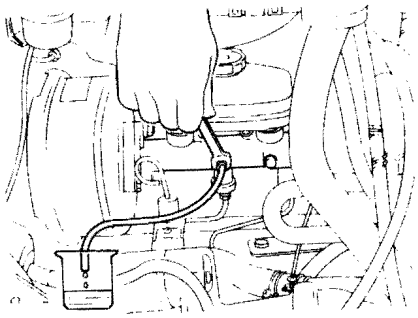

A3-228

Fig. 2-34

NOTE:

a. The brake piping consists of a dual system, cross design. The piping on the primary side connects the right front brake and the rear left brake and the piping on the secondary side connects the left front brake and rear right brake.

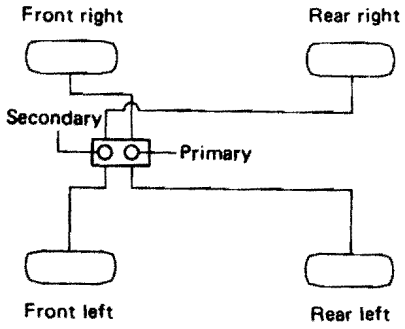

A17-150

Fig. 2-35

Always begin changing the brake fluid on the primary side and subsequently work on the secondary side.
For convenience and safety, it is advisable to have two men working.

b. Be careful not to spill brake fluid onto the painted surface.

c. Discard the drained brake fluid and do not reuse it.

4) Refill reservoir tank with recommended brake fluid. To purge air out of brake system lines, slowly and repeatedly depress and release the brake completely until a solid stream of brake fluid (containing no air bubbles) runs through vinyl tube.
Then tighten air bleeder securely.

Recommended brake fluid
FMVSS No. 116, fresh DOT3 brake fluid

NOTE:

a. Avoid mixing different brands of brake fluid to prevent degrading the quality of the fluid.

b. Be careful not to allow dirt or dust to get into the reservoir tank.

c. Use fresh DOT 3 brake fluid when replacing or refilling the fluid.

5) Install one end of a vinyl tube onto the air bleeder of wheel cylinder located farthest from master cylinder and put the other end of tube into the container for receiving brake fluid.

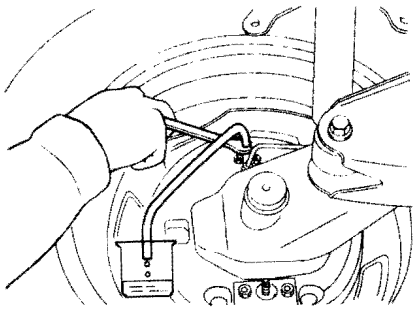

A3-124

Fig. 2-36

6) Open the air bleeder, and depress and release brake pedal until old brake fluid is drained out and new fluid flows through vinyl tube.
Then close the bleeder.

NOTE:

a. Always check to be sure a small amount of brake fluid is in the tank while changing brake fluid.

b. The amount of brake fluid required is approximately 80 cm³ (80 cc, 4.88 cu in) for each pipe on the primary and secondary sides.

7) Use the same procedure as the one described above to change brake fluid of front wheel cylinder.
8) Always start with the primary side and then work on the secondary side.
9) After brake fluid has been changed, bleed air from the brake lines as follows:

NOTE:

Start with the bleeder located farthest from the master cylinder.

(1) Install one end of a vinyl tube onto air bleeder screw and put the other end into the container.
(2) Attach a wrench to bleeder screw, but do not loosen it at this point.
(3) Instruct your co-worker to depress the brake pedal slowly two or three times and then hold it depressed.
(4) Loosen bleeder screw approximately 1/4 turn until a small amount of brake fluid drains into container, and then quickly tighten screw.
(5) Repeat steps (3) and (4) above until there are no air bubbles in drained brake fluid.

NOTE:

Add brake fluid as necessary while performing the air bleed operation, in order to prevent the tank from running short of brake fluid.

(6) After completing the bleeding operation, hold brake pedal depressed and tighten screw and install bleeder cap.

Torque (bleeder screw)	7 – 9 N·m (0.7 – 0.9 kg-m, 5.1 – 6.5 ft-lb)

(7) Bleed air from front wheel cylinder using the same procedures as described in steps 1) through 6) above.

Downloaded from www.Manualslib.com manuals search engine

10) Upon completion of air bleeding for the primary and secondary brake lines, depress brake pedal to determine if its operation and stroke length are correct.
11) Depress brake pedal again with a force of approximately 294 N (30 kg, 66 lb) and hold it there for approximately 20 seconds. At this time check pedal to see if it shows any unusual movement.
Visually inspect bleeder screws and brake pipe joints to make sure that there is no fluid leakage.

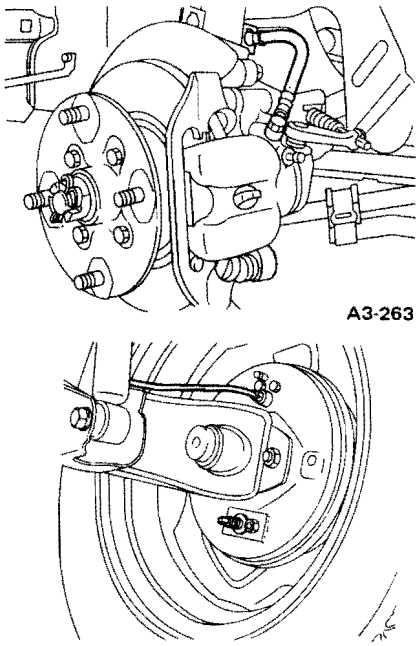

Fig. 2-37

12) Install front wheels, and drive car for a short distance between 2 to 3 km (1 to 2 miles) to make sure that brakes are operating properly.

20. Disc Brake Pad and Disc

Inspect disc brake pads and discs of both sides of front brake at the same time by removing the disc brake pads. For the removing and installing procedures of brake pads, refer to "BRAKES".

NOTE:
a. Do not touch the brake pedal with disc pads removed.
b. Do not disconnect the brake tubes and hoses.

Brake disc pad thickness	
Standard	15 mm (0.59 in)
Wear limit	7.5 mm (0.295 in)

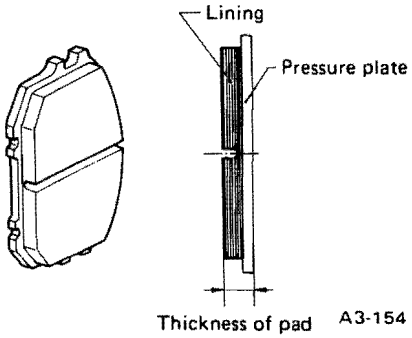

Fig. 2-38 Measuring thickness of disc pad

Brake disc thickness		
Solid disc	Standard	12.5 mm (0.492 in)
	Wear limit	10 mm (0.39 in)
Ventilated disc	Standard	18 mm (0.71 in)
	Wear limit	15.5 mm (0.610 in)

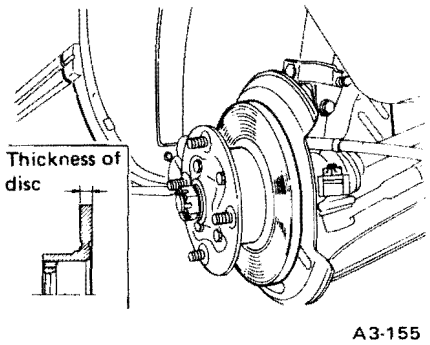

Fig. 2-39 Measuring thickness of brake disc

Maximum permissible disc rotor runout
0.10 mm (0.0039 in)

NOTE:
Measure the disc rotor runout at a point less than 5 mm (0.20 in) from the outer periphery of the rotor.

21. Brake Lining and Drum

Inspect brake linings and drums of both sides of the rear brake at the same time by removing brake drums.
For the removing and installing procedures of the rear brake, refer to "BRAKES".
1) Inspect brake shoes for damage or deformities and check brake linings for wear.

NOTE:
Always replace both leading and trailing brake shoes for the left and right wheels at the same time.

Brake lining thickness	
Standard	5 mm (0.20 in)
Wear limit	1.5 mm (0.059 in)

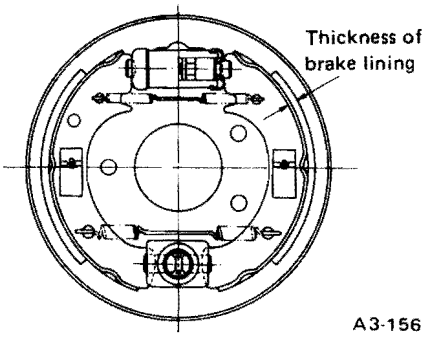

Fig. 2-40 Measuring thickness of brake lining

2) Check brake drum for wear, dents or other damage.

Brake drum inside diameter	
Standard	180 mm (7.09 in)
Wear limit	182 mm (7.17 in)

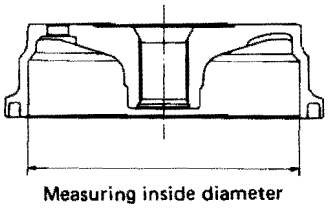

Fig. 2-41 Measuring brake drum

Downloaded from www.Manualslib.com manuals search engine

22. Brake System for Leaks or Damage

1) Check scratches, swelling and/or traces of fluid leakage on brake hoses or pipe joints.

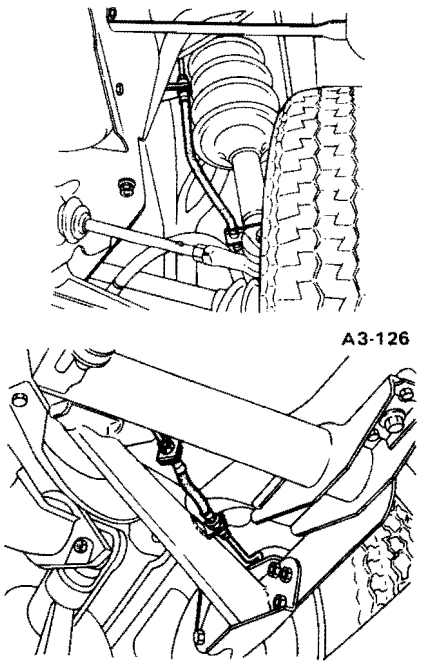

Fig. 2-42

2) Check the possibility of adjacent parts interfering with brake pipes/hoses during driving, and loosen connections/clamps.
3) Check any trace of fluid leakage, scratches, etc. on master cylinder or wheel cylinder.

NOTE:
When the brake fluid level in the reservoir tank is lower than the specified limit, the brake fluid warning light on the instrument panel will come on.

23. Brake System, Parking Brake and Brake Servo System Operations

- **Brake system**

1) Check the free play of brake pedal by lightly depressing the pedal with your finger.

Brake pedal free play
5 – 11 mm (0.20 – 0.43 in)

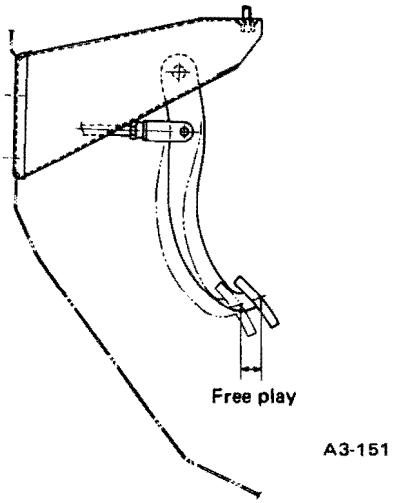

Fig. 2-43

If the free play is not within the specified range, adjust the length of master-vac operation rod and/or the position of stop lamp switch until correct adjustment has been made.

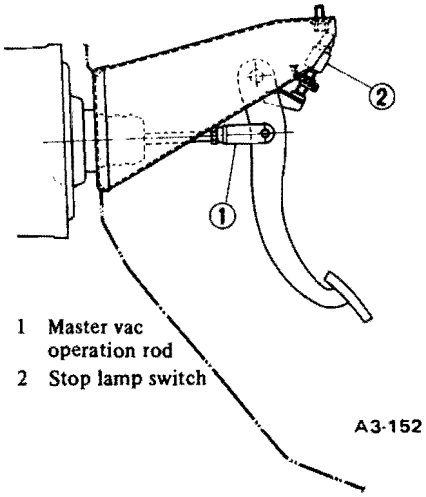

Fig. 2-44

2) Adjust lining clearances of rear brake as follows.
a. Jack up vehicle to release tires and wheels slightly from the ground.
b. Tighten adjusting screw on back side of rear brake drum fully until tire and wheel ceases to rotate.
c. Turn back adjusting screw by 180° and lining clearance will be 0.1 to 0.15 mm (0.004 to 0.0059 in).
d. Be sure to rotate tire and wheel lightly by hand.
e. Adjust lining clearance of another side rear brake with the same manner.

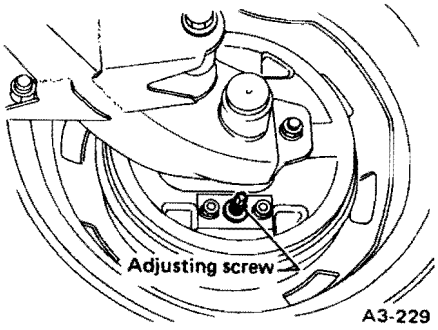

Fig. 2-45 Adjusting screw for lining clearance

3) Measure the distance between brake pedal and floor when the pedal is depressed with a force of approximately 294 N (30 kg, 66 lb).

Brake pedal reserve distance
More than 80 mm (3.15 in)/ 294 N (30 kg, 66 lb)

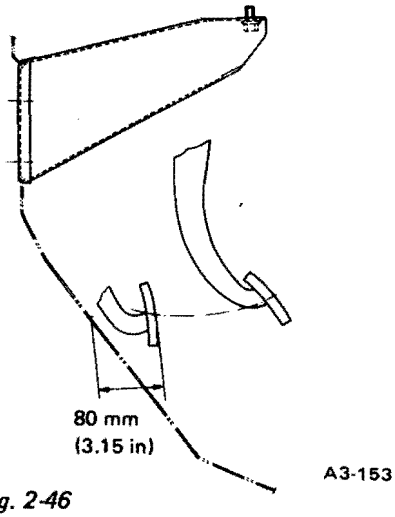

Fig. 2-46

4) Check to see if air is in the hydraulic brake line by the feel of the pedal operation. If air appears to exist in the line, bleed it from the system.

Downloaded from www.Manualslib.com manuals search engine

5) Check for even operation of all brakes, using a brake tester or by driving the vehicle for a short distance on a straight road.

• Parking brake

1) After confirming the proper operation of brake pedal, pull parking brake lever with a force of approximately 245 N (25 kg, 55 lb) to make sure lever still has a short length of stroke to go.

Parking brake lever stroke	
Standard	3 – 4 notches/ 245N (25 kg, 55 lb)
Total number	11 notches

2) If the parking brake lever pull is not within the above specifications, adjust it as follows:

a. Pull parking brake lever forcibly three to five times.
b. Loosen the lock nut and change the setting of adjuster until the play at point A is 0 to 0.5 mm (0 to 0.020 in).

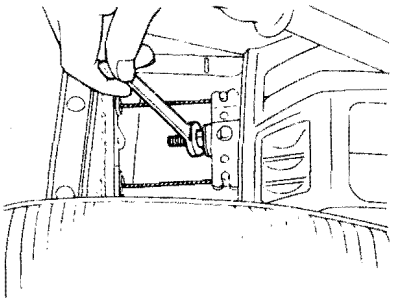

A3-130

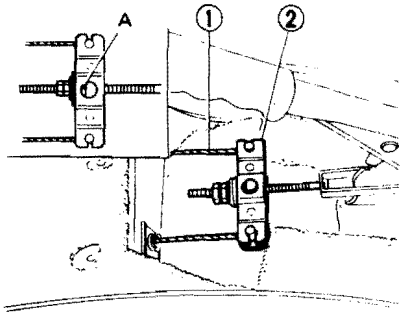

1 Cable
2 Equalizer

A17-149

Fig. 2-47

c. Lightly depress and release brake pedal as necessary until the parking brake lever pull is within the specifications.
d. Make sure that vehicle stops on uphill road properly by operating parking lever.

• Brake servo system

1) Connect a vacuum gauge to the line between the master-vac and the check valve.

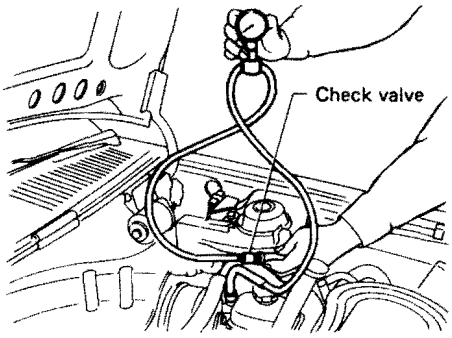

A3-230

Fig. 2-48

2) Start engine and keep it running until a vacuum of 66.7 kPa (500 mmHg, 19.69 inHg) is indicated on the vacuum gauge.
Do not depress brake pedal.
3) Stop engine and watch the gauge to make sure that the vacuum drops below 3.3 kPa (25 mmHg, 0.98 inHg), within 15 seconds.
If the vacuum drops below 3.3 kPa (25 mmHg, 0.98 inHg), the brake servo system is functioning properly.
4) If a vacuum gauge is not available, check the vacuum using the following procedures:
(1) With engine off, depress brake pedal several times applying the same amount of pressure so that a vacuum will not be created. After several applications of pedal pressure, check the pedal height above floor to make sure that it does not vary with each depression of pedal.
(2) With brake pedal depressed, start engine.
(3) As engine starts, if brake pedal moves slightly toward floor, master-vac is functioning properly.

24. Cups and Dust Seals of Master Cylinder and Wheel Cylinders

Replace the cups and dust seals of master cylinder and wheel cylinders according to "BRAKES".

NOTE:
Carry out this replacing operation before replacing brake fluid.

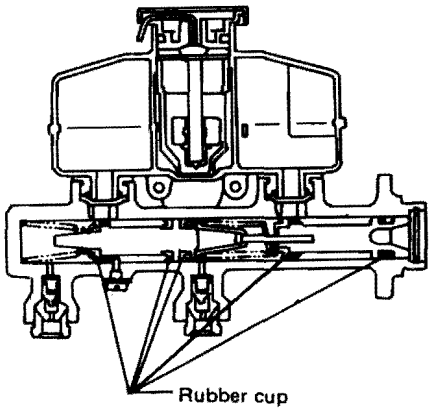

A3-231

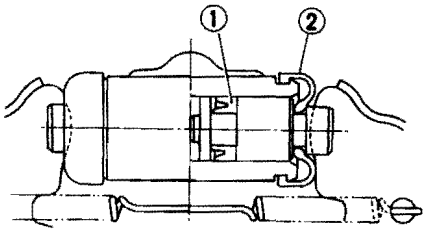

1 Rubber cup
2 Dust seal

A3-162

Fig. 2-49 Replacing cups and dust seals of master cylinder and wheel cylinder

25. Lubricate Front Disc Caliper

• Parking brake lever

1) Remove lever cap ring.
2) Take off lever cap.
3) Remove grease, and clean the lip of lever cap and its slot of caliper body to be free from any foreign matter.

NOTE:
If the slot gathers rust, rub it off by a wire brush.

Downloaded from www.Manualslib.com manuals search engine

4) Apply sufficient amount of specified grease to the space around lever & spindle so as to be filled inside of lever cap after fitting it.
Especially apply grease to the ends of lever & spindle, cone spring and the lever cap fitting slot without fail.

Grease
NIGLUBE RX-2 grease (725191040 or 003606000)

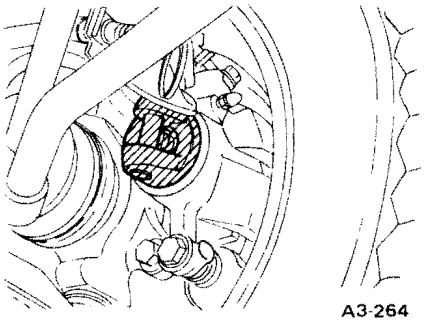

Fig. 2-50 Grease application

NOTE:
Never use any grease except the specified; otherwise the lever cap will be deteriorated and will cause damage to the function of the disc brake.

5) Pull parking brake lever several times.
6) Fit lever cap properly into the slot of caliper body.
7) Attach cap ring onto lever cap.

NOTE:
Be careful not to damage the lever cap by the edge of the cap ring. If the lever cap is deformed or damaged, replace it with a new one.

- **Slide pin**

1) Remove caliper body assembly from support.
2) Remove foreign materials from guide pin and sleeve, and apply Silicon Compound (725191050 or 003606010) to this area.

NOTE:
Use only Silicon Compound (725191050 or 003606010) for guide pin and lock pin portions.

Grease
Silicon Compound (725191050 or 003606010)

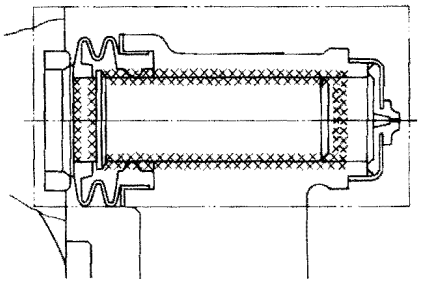

Fig. 2-51 Grease application to guide pin portion

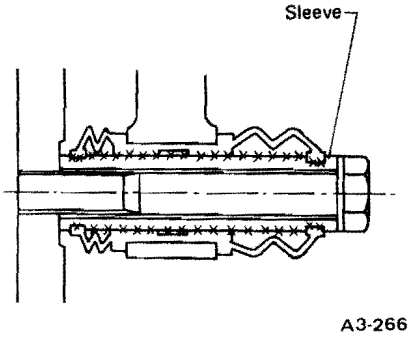

Fig. 2-52 Grease application to lock pin portion

3) Then, install caliper body ASSY and tighten lock pin to the specified torque.

Torque	16 – 24 N·m (1.6 – 2.4 kg-m, 12 – 17 ft-lb)

NOTE:
a. After assembly, make sure that boots are properly fitted in grooves on guide pin and sleeve.
b. If boot contains too much air and is expanded, press it to purge out air.

26. Vacuum Hose and Check Valve of Brake Servo System

1) Check vacuum hose for cracks or other damage.
2) Remove check valve and manually blow through valve to check its operation. When air is drawn in through the opening of check valve on the engine side, air flows through master-vac. If air is drawn in through the opening on the master-vac side, air will not flow and therefore check valve should be replaced with a new one.
3) Check valve conducts air in one direction only.
When installing, note the direction of check valve and correctly connect valve to vacuum hoses.

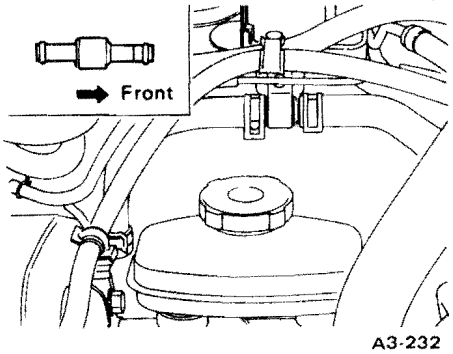

Fig. 2-53

NOTE:
When installing the check valve onto the vacuum hose or when installing the vacuum hose on the engine and master-vac, do not use soapy water or lubricating oil on their connections.

4) Check all vacuum hoses to make sure they are tight and secure.

27. Clutch and Hill Holder Systems

1) Inspect free play of clutch pedal by operating pedal by hand.
If it is out of the specified value, adjust it by turning adjusting nut on engine side end of clutch cable at release fork.

Downloaded from www.Manualslib.com manuals search engine

Adjustment standard of free play	
At clutch pedal	13 – 20 mm (0.51 – 0.79 in)
(At center of cable on clutch release fork)	(2 – 3 mm (0.08 – 0.12 in))

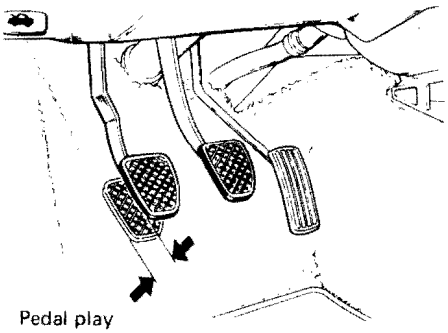

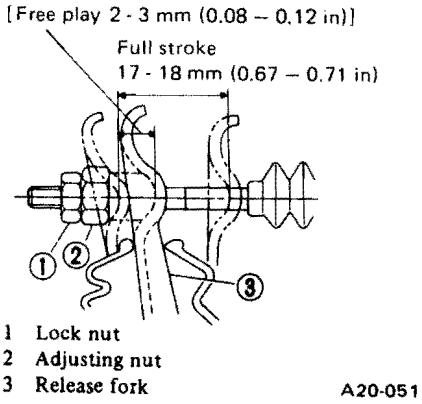

Fig. 2-54 Adjusting free play of clutch pedal

Torque (Adjusting nut on release fork)	5.4 – 9.3 N·m (0.55 – 0.95 kg-m, 4.0 – 6.9 ft-lb)

NOTE:

a. When replacing clutch cable with new one and/or making free play adjustment of clutch pedal, make adjustment of hill-holder system without fail as follows.

b. After replacing clutch cable and/or pressure hold valve (PHV) cable with new one, depress clutch pedal about thirty (30) times as a running-in operation prior to this adjustment.

2) Confirm stopping and starting performance by activing hill-holder on an uphill road of 3° or higher inclination.

(1) If vehicle does not stop;
Tighten adjust nut of PHV cable.

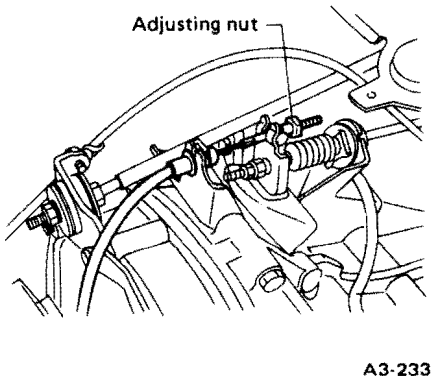

Fig. 2-55

(2) If vehicle does not start properly;

- Case A – When hill-holder is released later than engagement of clutch (engine tends to stall):
  Loosen adjusting nut gradually until smooth starting is enabled.
- Case B – When hill-holder is released earlier than engagement of clutch (vehicle slips down slightly):
  Tighten adjust nut so that hill-holder is released later than engagement of clutch (status in Case A). Then make adjustment the same as in Case A.

NOTE:

a. Whenever turning adjust nut, prevent PHV cable from revolving as following illustration.

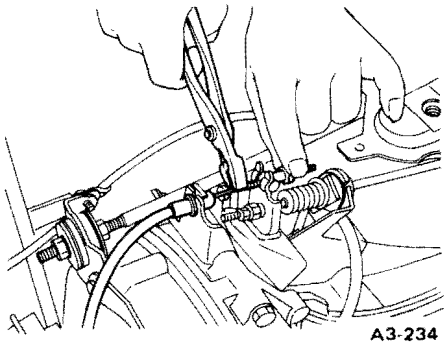

Fig. 2-56

b. Replace pressure hold valve (PHV), return spring of PHV or PHV cable with new one, if they are defective and/or damaged. (See "BRAKES".)

28. Steering System, Front and Rear Axle Boots

1. Steering System

If it is necessary to correct the steering system, refer to "STEERING SYSTEM".

• Steering wheel

1) Set steering wheel in a straight-ahead position, and check wheel spokes to make sure they are correctly set in their specified positions.

2) Lightly turn steering wheel to the left and right to determine the point where front wheels start to move.
Measure the distance of the movement of steering wheel at the outer periphery of wheel.

Steering wheel free play
0 – 25 mm (0 – 0.98 in)

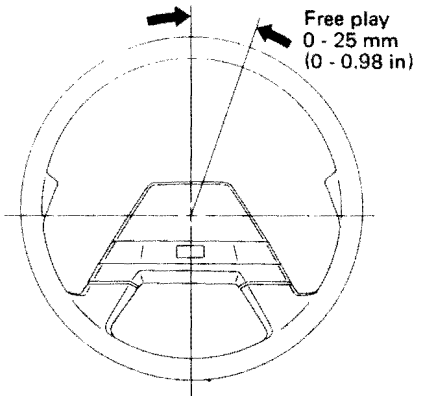

Fig. 2-57

3) Move steering wheel vertically toward the shaft to ascertain if there is play in that direction.

Maximum permissible play: 0.5 mm (0.020 in)

4) Drive vehicle and check the following items during operation.

(1) Steering force .....
The effort required for steering should be smooth and even at all points, and should not vary.

Downloaded from www.Manualslib.com manuals search engine

(2) Pull to one side .....
Steering wheel should not pull to either side while driving on a level surface.
(3) Wheel runout .....
Steering wheel should not show any sign of runout.
(4) Return factor .....
Steering wheel should return to its original position after it has been turned and then released.

• Steering shaft joint

1) Disconnect universal joint of steering shaft and check it for any play and yawing torque (at the point of the crossing direction). Also inspect for any damage to sealing or worn serrations.
2) Check rubber coupling for deformities, cracks, or peeling off.
If oil comes in contact with coupling, wipe it clean.

• Gear box

1) With wheels placed on a level surface, turn steering wheel 90° in both the left and right directions.
While wheel is being rotated, reach under vehicle and check for looseness in gear box.

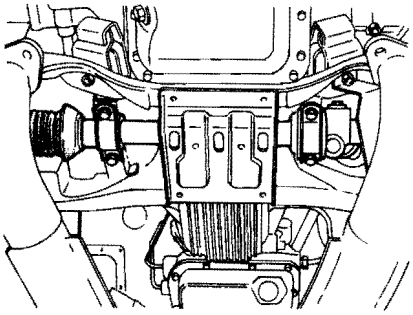

A3-134

Fig. 2-58

2) Check boot for damage, cracks or deterioration.
3) With vehicle on a level surface, quickly turn steering wheel to the left and right.
While steering wheel is being rotated, check the gear backlash.

If any unusual noise is noticed, adjust the gear backlash as follows:
(1) Loosen gear box mounting clamps, and slightly lower gear box.
(2) Loosen lock nut by using Spanner (925640000) and tighten adjusting screw fully.

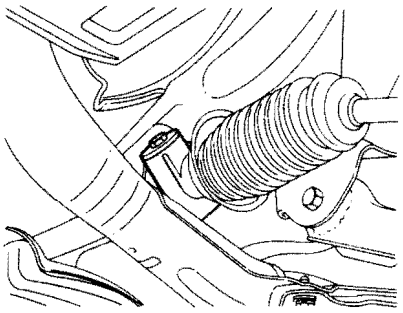

A3-135

Fig. 2-59

(3) From that position, turn back adjusting screw 15° and then tighten lock nut securely.

Torque	29 – 49 N·m (3.0 – 5.0 kg-m, 22 – 36 ft-lb)

NOTE:
Hold the adjusting screw with a wrench to prevent it from turning while tightening the lock nut.

• Tie rod

1) Check tie rod and tie-rod ends for bends, scratches or other damage.
2) Check connections of knuckle ball joints for play, inspect for damage on dust seals, and check the free play of ball studs.
3) Make sure that tie rod lock nut is tight and secure.

2. Front and Rear Axle Boots

Inspect front and rear axle boots for deformation, damage or failure. If faulty, replace them with new ones. For replacing procedure, refer to "SUSPENSION, WHEELS AND AXLES".

29. Power Steering System

For vehicles with power steering system, inspect the system as follows in addition to the previous article.

• Power steering fluid level

1) Place vehicle with engine "off" on the flat and level surface.
2) Check the fluid level by removing filler cap of oil pump.

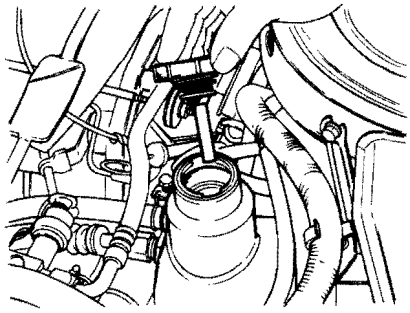

OM-750

Fig. 2-60 Oil pump for power steering

a. Check at temperature 21°C (70°F) on reservoir surface of oil pump

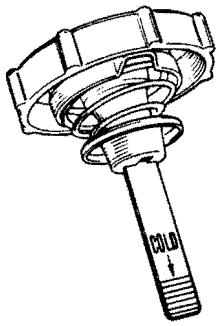

OM-752

Fig. 2-61 Indicator of filler cap

b. Check at temperature 60°C (140°F) on reservoir surface of oil pump

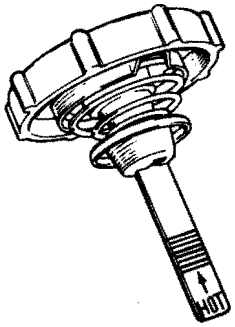

OM-751

Fig. 2-62 Indicator of filler cap

Downloaded from www.Manualslib.com manuals search engine

3) Fluid level should be maintained in the each specified range on the indicator of filler cap.
If fluid level is at lower point or below, add fluid to keep the level in the specified range of indicator.
If fluid level is at upper point or above, drain fluid to keep the level in the specified range of indicator by using a syringe or the like.

Recommended fluid (ATF Dexron)	
B.P.	B.P. Autran DX
CALTEX	Texamatic fluid 6673 Dexron
CASTROL	CASTROL TQ Dexron
MOBIL	MOBIL ATF 220
SHELL	SHELL ATF Dexron
TEXACO	Texamatic fluid 6673 Dexron

Fluid capacity
0.8 liter (0.8 US qt, 0.7 Imp qt)

• Power steering fluid for leaks

Inspect the underside of oil pump and gearbox for power steering system, hoses, piping and their couplings for fluid leaks.
If fluid leaks are found, correct them by retightening their fitting bolts (or nuts) and/or replacing their parts.

NOTE:
a. Wipe the leakage fluid off after correcting fluid leaks, or a wrong diagnosis is taken later.
b. Also pay attention to clearances between hoses (or pipings) and other parts when inspecting fluid leaks.

• Hoses of oil pump for damages

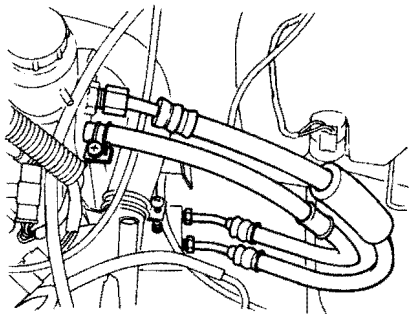

A3-199

Fig. 2-63 Hoses of oil pump

Check pressure hose and return hose of oil pump for clack, swell or damage. Replace hose with new one if necessary.

NOTE:
Prevent hoses from revolving and/or turning when installing hoses.

• Gearbox boots

Inspect both sides of gearbox boots as follows, and correct the defects if necessary.

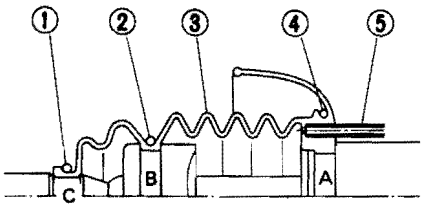

1 Clip (small)
2 Clip (middle)
3 Boot
4 Clip (large)
5 Air vent pipe

A3-200

Fig. 2-64 Gearbox boot

1) A, B and C positions of gearbox boot are fitted correspondingly in A, B and C grooves of gearbox and the rod.
2) Clips are fitted outside of A, B and C positions of boot.
3) Projection of boot is fitted in hole on A groove of gearbox to prevent boot rotating.
4) Boot have not clack, hole (except for air vent pipe) or damage.
5) Air vent pipe is inserted in the specified hole without fail.
6) Grease or other obstructions against air flow are not contained in air vent pipe.

NOTE:
a. When air vent pipe comes off hole of gearbox boot, it is also caused by means of clogging of air vent pipe.
b. Rotate B and C position of gearbox boot against twist of it produced by adjustment of tow-in etc.
In this case, never rotate A position of gearbox boot.

• Fitting bolts and nuts

Inspect fitting bolts and nuts of oil pump and bracket for looseness, and retighten them if necessary.

NOTE:
Inspect and/or retighten them when engine is cold.

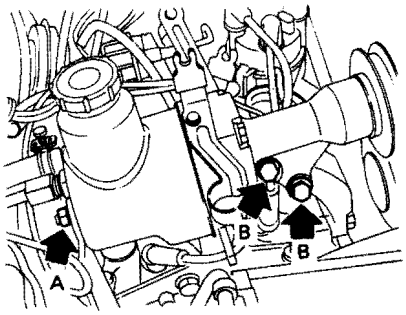

A3-201

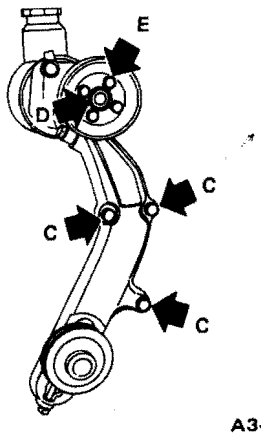

A3-202

Fig. 2-65 Fitting bolts and nuts

Downloaded from www.Manualslib.com manuals search engine

Torque N·m (kg-m, ft-lb)	
Nut A (one)	44 – 54 (4.5 – 5.5, 33 – 40)
Bolt B (two)	44 – 54 (4.5 – 5.5, 33 – 40)
Bolt C (three)	25 – 34 (2.5 – 3.5, 18 – 25)
Nut D (one)	49 – 59 (5.0 – 6.0, 36 – 43)
Bolt E (four)	14 – 18 (1.4 – 1.8, 10 – 13)

30. Suspension System,

1) Jack up the front end of vehicle, and remove front wheels.
2) Remove cotter pin and castle nut from ball stud and disengage ball stud from transverse link.

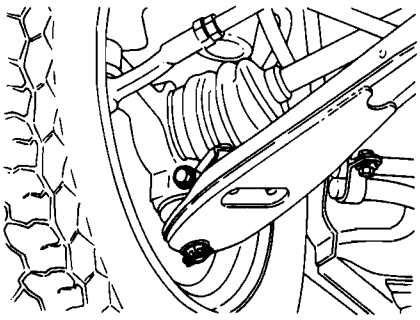

A3-136

Fig. 2-66

3) Remove bolts which secure housing to ball joint, and remove ball joint.
4) Check the axial play of ball stud. If play exists, replace ball joint with a new one.
5) Check rubber boot for cracks or damage.
If necessary, replace ball joint.
6) Tighten nuts and bolts which are used to secure ball joint, to the specified torque setting indicated in the chart below.

Torque N·m (kg-m, ft-lb)	
Ball stud transverse link castle nut	39 (4.0, 29)
Ball joint to housing bolt	29 – 39 (3.0 – 4.0, 22 – 29)

NOTE:
Be careful not to allow the tapered area of the ball stud to come in contact with grease.

7) Check the tightness of strut mounting nuts on front suspension and retighten the nuts to the specified torque.

Torque N·m (kg-m, ft-lb)	59 – 74 (6.0 – 7.5, 43 – 54)

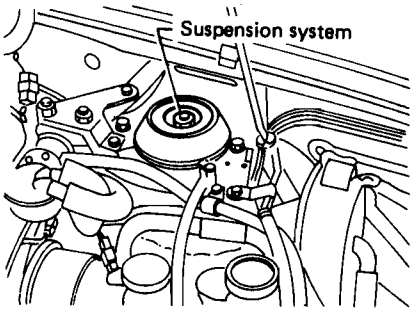

A3-279

Fig. 2 – 67

8) Check the tightness of rear cross-member installing bolts on rear suspension and Tighten the bolts to the specified torque.

Torque N·m (kg-m, ft-lb)	118 – 147 (12.0 - 15.0, 87 – 108)

31. Grease on Front and Rear Wheel Bearings

Inspect the condition and the amount of front and rear wheel bearing grease as follows.

- **Front wheel bearing**

1) Raise front wheel with a jack, and remove wheel. Remove cotter pin from axle shaft and remove castle nut.
2) Remove bolts which secure disc rotor to front wheel hub, and remove hub.

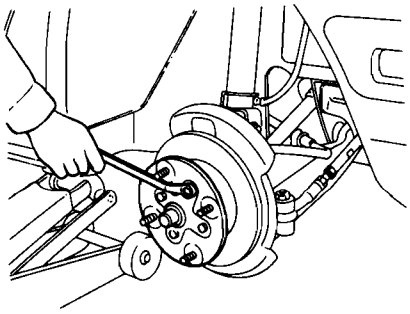

A3-137

Fig. 2 – 68

3) Remove oil seal from housing, and check the condition of bearing grease.

NOTE:
a. If either the grease appears to be white or if only a small amount of grease remains, remove the bearing from the housing, clean it, and pack it with grease.
Refer to "SUSPENSION, WHEELS AND AXLES" for further details.
b. Discard the old seal and install a new one.

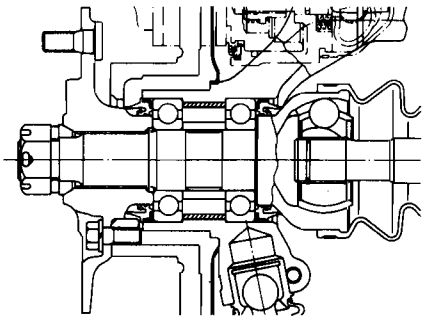

A3-158

Fig. 2 – 69

4) Installation is in the reverse order of removal.

Torque (Castle nut)	196 N·m (20 kg-m, 145 ft-lb)

Downloaded from www.Manualslib.com manuals search engine

NOTE:
After tightening the castle nut to the specified torque, tighten additionally in one sixth (1/6) turn until both holes of bolt and castle nut align each other.

Torque (Hub to disc rotor bolts)	44 – 58 N·m (4.5 – 5.9 kg-m, 33 – 43 ft-lb)

- **Rear wheel bearing**

Remove rear brake drum and check its condition and the amount of bearing grease. Refer to "SUSPENSION, WHEELS AND AXLES" for removal and installation of rear brake drum.

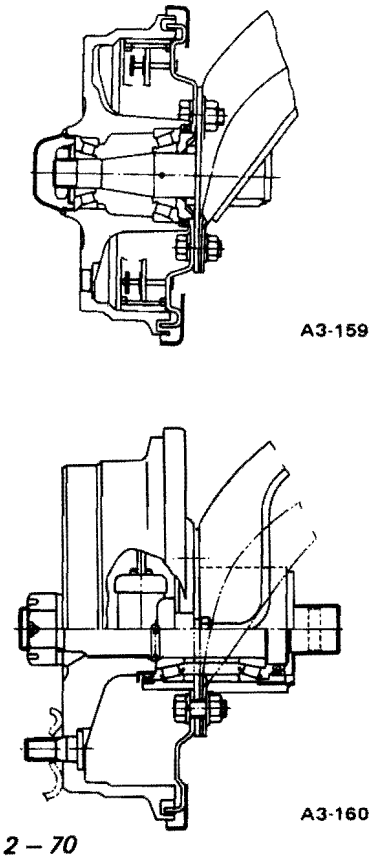

Fig. 2 – 70

32. Wheel Alignment

Before checking/adjusting front wheel alignment, be sure to make a prior inspection of the following points and repair/replace the damaged portions/parts as necessary.

- Tire pressure
- Wear or damage of tires
- Wheel balance
- Looseness on suspension
- Looseness and smooth operation on axle linkage and connection
- Looseness and smooth operation on steering linkage and connection
- Shock absorber operation and oil leakage
- Damage, deformation, etc. on body attaching portion of suspension, axle and steering linkage and connection
- Vehicle height [It is recommended that the difference of vehicle height between the front and rear ends, or the left and right sides is less than 10 mm (0.39 in) in the unloaded condition.]
- Stain, rust, grease leakage, etc. on front end parts

1) Check the toe-in.

Toe-in	
Except 4WD	in 1 ± 1 mm (0.04 ± 0.04 in)
4WD	out 5 ± 1 mm (0.20 ± 0.04 in)

3) If the toe-in is not within the specified range, turn left and right tie rods by equal angles, and adjust the toe-in.

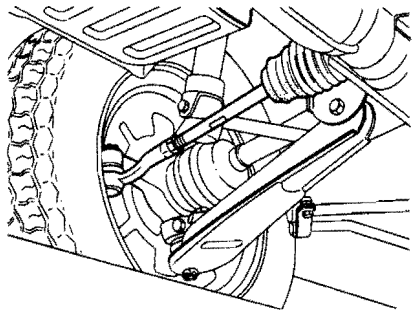

Fig. 2 – 71

4) After completing the toe-in adjustment, tighten lock nut to the specified torque setting.

Torque	78 – 88 N·m (8 – 9 kg-m, 58 – 65 ft-lb)

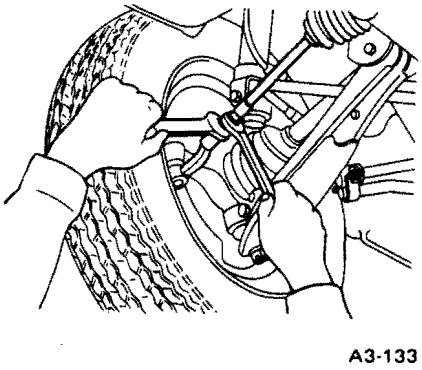

Fig. 2 – 72

33. Retighten Wheel Nuts

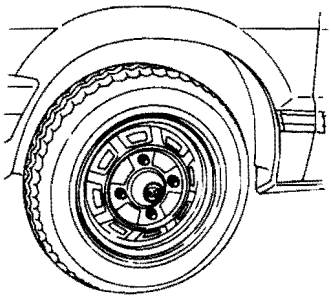

Fig. 2-73 Wheel nuts

Downloaded from www.Manualslib.com manuals search engine

Torque (Wheel nuts)	78 – 98 N·m (8 – 10 kg-m, 58 – 72 ft-lb)

NOTE:

a. Do not use air impact tools to retighten wheel nuts.

b. Tighten wheel nuts in the order shown in the following illustration.

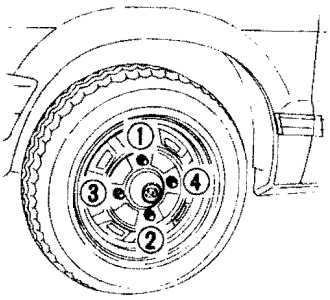

Fig. 2-74

34. Headlight Aiming

1) Adjust the tire pressure to the specifications.

2) Put vehicle and screen on a level surface. Position screen at a distance of 7.6 m (24.9 ft) from headlights.

3) Have vehicle in its unladen condition. (with maintenance tools, a spare tire & wheel and full fuel tank)

4) Check the aim of headlight. If necessary, turn adjusting screws to adjust the beam axis vertically and horizontally in accordance with specifications.

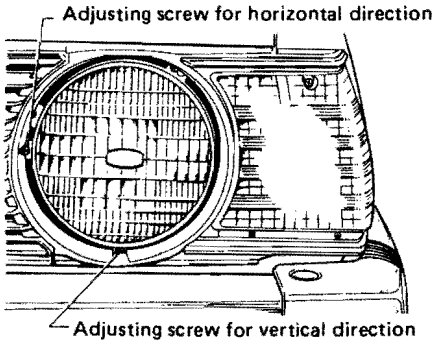

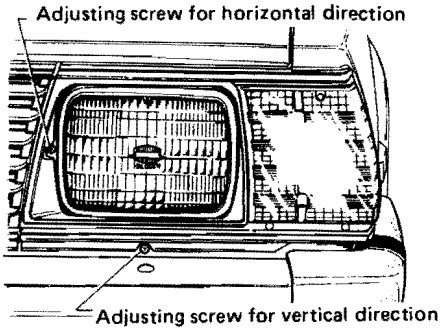

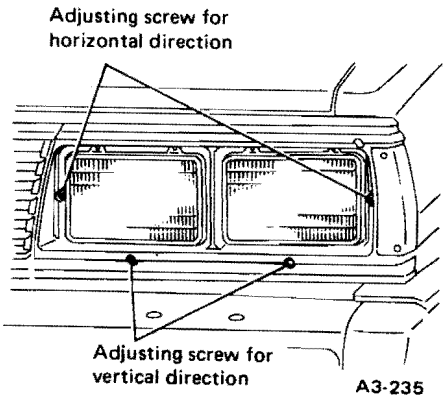

Fig. 2-75 Adjusting screws

a. High beam (driving beam):

NOTE:

a. On vehicles with four (4) headlights, cover the outer headlights on both sides with black cloth or shades, and adjust the inner headlight only.

b. On vehicles with two (2) headlights, adjust lower beam axis only.

Vertical	Center of high intensity area should be at headlight center.
Horizontal	

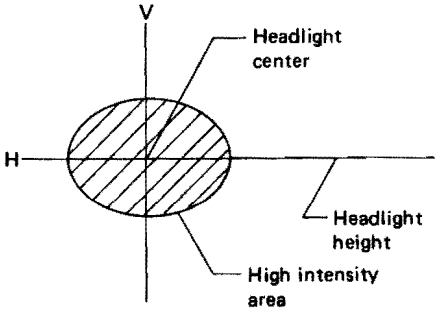

Fig. 2-76

b. Low beam (passing beam):

NOTE:

Low beam adjustment is available only for vehicles with four (4) headlights.

Vertical	Upper end of high intensity area makes contact with H line.
Horizontal	Left-hand end of high intensity area makes contact with V line.

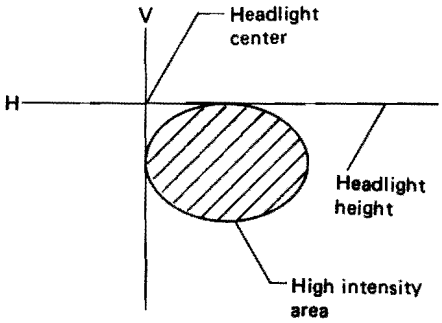

Fig. 2-77

Downloaded from www.Manualslib.com manuals search engine

35. Lubricate Hinges and Locks of Doors, Hood and Trunk Lid

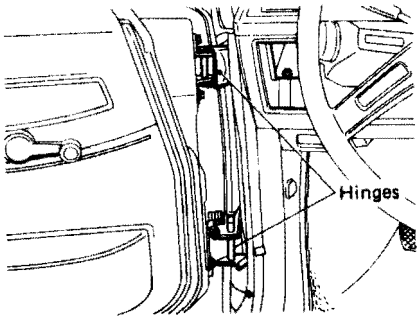

A3-139

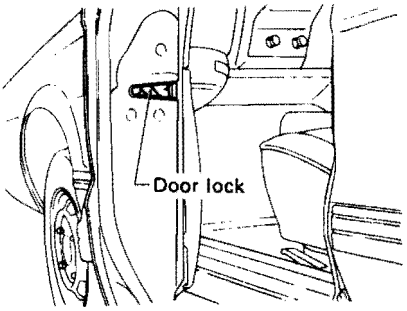

A3-140

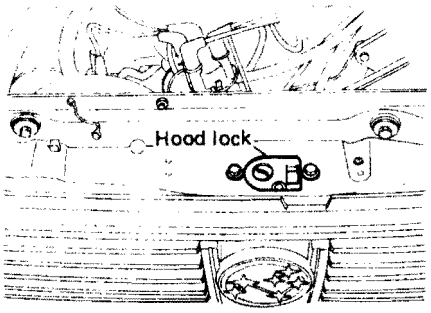

A3-141

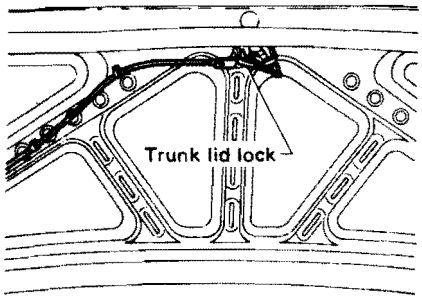

A3-142

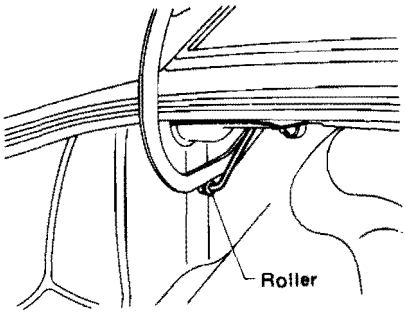

A3-143

Fig. 2-78

2-3. Special Tools

498767000	499987006	899988607	925640000
Adjuster	Socket wrench	Socket wrench	Spanner
Intake & exhaust valve	Cylinder head nuts	Cylinder head nuts	Steering gearbox
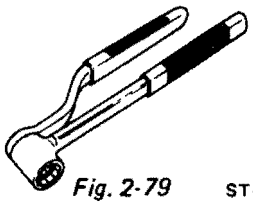 *Fig. 2-79* ST-029	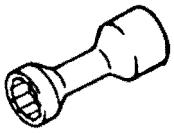 *Fig. 2-80* ST-030	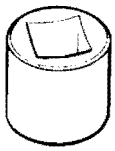 *Fig. 2-81* A3-066	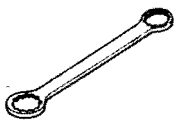 *Fig. 2-82* A3-167

Downloaded from www.Manualslib.com manuals search engine

CHAPTER 3

ENGINE

Page

3– 1. SPECIFICATIONS AND SERVICE DATA 3– 2
3– 2. COMPONENT PARTS 3–14
3– 3. ON-CAR SERVICES 3–30
3– 4. DISMOUNTING AND REMOUNTING 3–38
3– 5. REMOVAL 3–43
3– 6. DISASSEMBLY 3–45
3– 7. INSPECTION AND ADJUSTMENT 3–46
3– 8. ASSEMBLY 3–61
3– 9. INSTALLATION 3–67
3–10. TROUBLESHOOTING 3–75
3–11. SPECIAL TOOLS 3–84

SUBARU

Downloaded from www.Manualslib.com manuals search engine

3-1. Specifications and Service Data

1. Entire Engine Specifications

			SUBARU 1600	SUBARU 1800			
				With MT		With AT	
				Other than 4WD	4WD	Other than 4WD	4WD-AT
ENGINE	Type		Horizontally opposed, liquid cooled, 4-cylinder, 4-stroke gasoline engine				
	Valve arrangement		Overhead type				
	Bore x Stroke mm (in)		92 x 60 (3.62 x 2.36)	92 x 67 (3.62 x 2.64)			
	Piston displacement cc (cu in)		1,595 (97.33)	1,781 (108.68)			
	Compression ratio		9.0	8.7			
	Compression pressure kPa (kg/cm², psi) (at 350 rpm)		1,206 (12.3, 175)	1,177 (12.0, 171)			
	Number of piston rings		Pressure ring: 2, Oil ring: 1				
	Intake valve timing	Opening	20° BTDC				
		Closing	60° ABDC			64° ABDC	
	Exhaust valve timing	Opening	60° BBDC			64° BBDC	
		Closing	20° ATDC				
	Valve clearances (when engine is cold) mm (in)	Intake	0.25 (0.010)			0 (0)	
		Exhaust	0.35 (0.014)			0 (0)	
	Idling speed [At neutral (or N) or P position] rpm		700 ± 100			800 ± 100	
	Engine dimensions mm (in)	Length	419 (16.50)	422 (16.61)		411 (16.18)	
		Width	701 (27.60)	712 (28.03)			
		Height	607 (23.90)				
	Weight of engine without transmission kg (lb) (Oil and coolant are included)		*1: 105 (232) *2: 101 (223)	*1: 108 (238) *2: 104 (229) *3: 103 (227)	*2: 104 (229) *4: 103 (227)	*1: 99 (218) *2: 95 (209) *3: 94 (207)	*2: 95 (209) *4: 94 (207)
	Air cleaner element		Viscous type				
	Emission control system		• Crankcase emission control system: PCV system • Evaporative emission control system: Canister storage type with fuel return • Exhaust emission control system: Three-way catalyst [49 States (except 4WD & 4WD AT) and California] + Oxidation catalyst (other than California) + EGR + Air injection				
	Firing order		1 – 3 – 2 – 4				
	Ignition timing		BTDC 8°/700 rpm			BTDC 8°/800 rpm	

*1: 49 States
*2: California
*3: Canada
*4: 49 States and Canada

Downloaded from www.Manualslib.com manuals search engine

2. Lubrication System Specifications

			SUBARU 1800	SUBARU 1600
Lubrication method			Forced feed, full flow filtration, splash type	
Oil pump	Pump type		Trochoid type	
	Discharge performance I	Discharge – Pressure	4.0ℓ/min (4.2 US qt/min, 3.5 Imp qt/min) or more – 343 kPa (3.5 kg/cm², 50 psi)	3.0ℓ/min (3.2 US qt/min, 2.6 Imp qt/min) or more – 245 kPa (2.5 kg/cm², 36 psi)
		Speed	500 rpm	
		Oil temperature	75 – 85°C (167 – 185°F)	
	Discharge performance II	Discharge – Pressure	21.0ℓ/min (22.2 US qt/min, 18.5 Imp qt/min) or more – 392 kPa (4.0 kg/cm², 57 psi)	15.0ℓ/min (15.9 US qt/min, 13.2 Imp qt/min) or more – 392 kPa (4.0 kg/cm², 57 psi)
		Speed	2,500 rpm	
		Oil temperature	75 – 85°C (167 – 185°F)	
	Oil relief valve	Pressure at which valve starts to open	392 – 441 kPa (4.0 – 4.5 kg/cm², 57 – 64 psi)	
	Oil by-pass valve	Pressure at which valve starts to open	147 kPa (1.5 kg/cm², 21 psi)	98 kPa (1.0 kg/cm², 14 psi)
Oil filter		Type	Paper, cartridge type	
		Filtration area	0.15 m² (1.6 sq ft)	
Engine oil capacity		Upper level	4.0ℓ (4.2 US qt, 3.5 Imp qt)	3.5ℓ (3.7 US qt, 3.1 Imp qt)
		Lower level	3.0ℓ (3.2 US qt, 2.6 Imp qt)	2.5ℓ (2.6 US qt, 2.2 Imp qt)

Downloaded from www.Manualslib.com manuals search engine

3. Engine Oil Flow Diagram

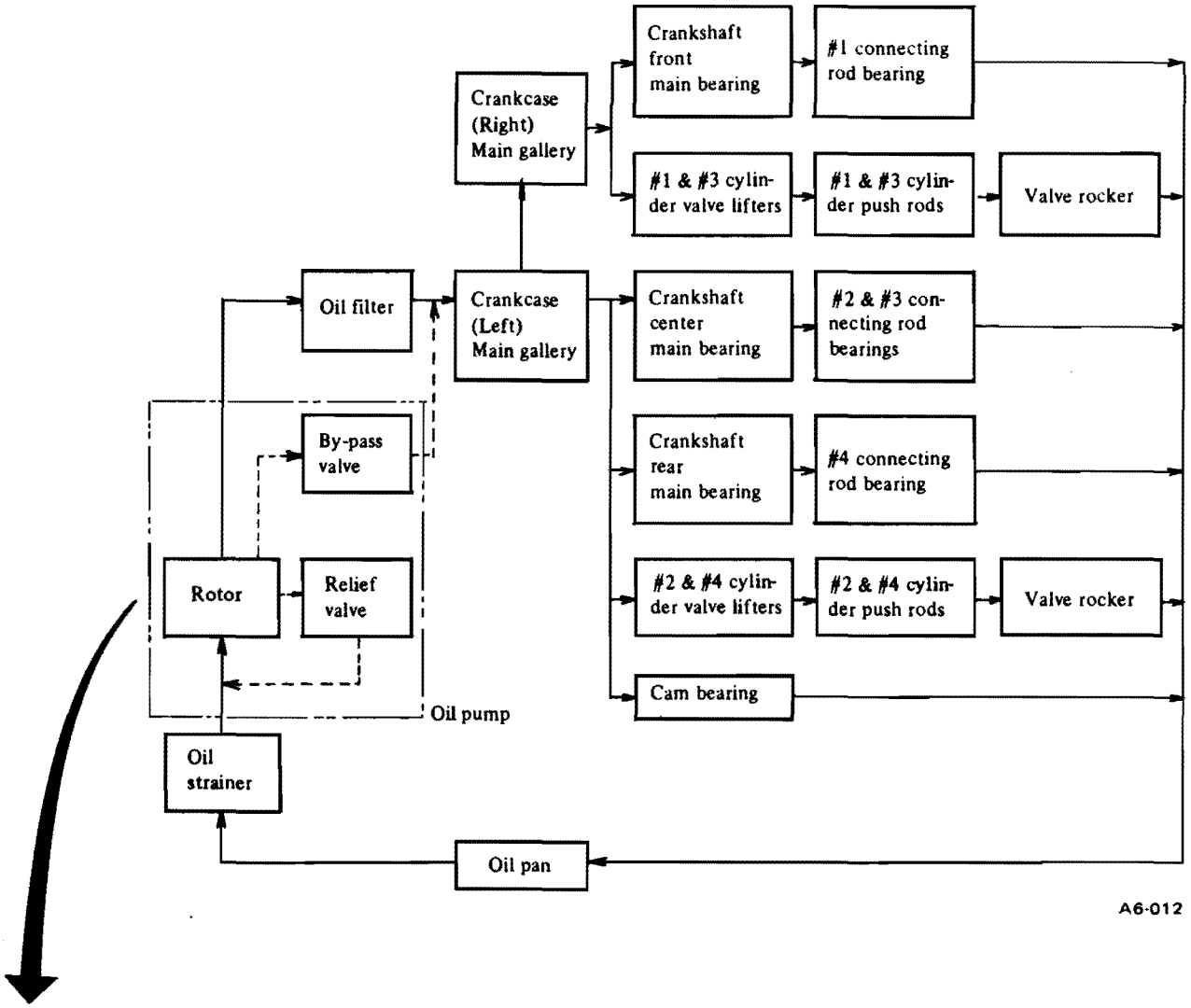

(SUBARU 1800)

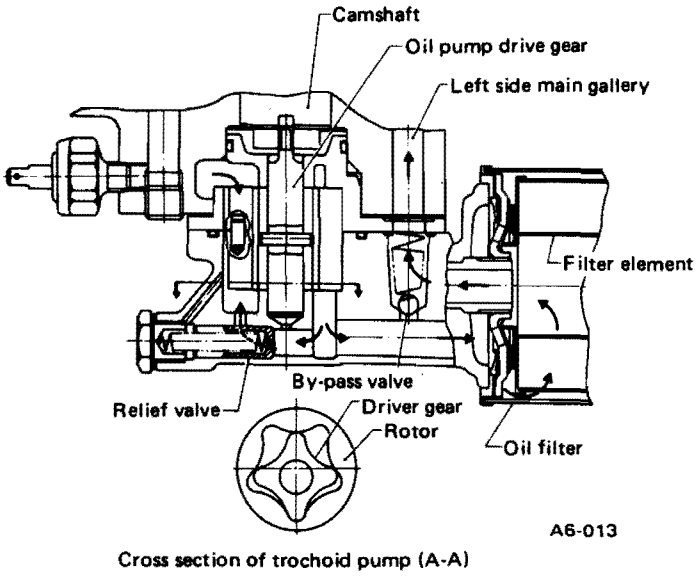

(SUBARU 1600)

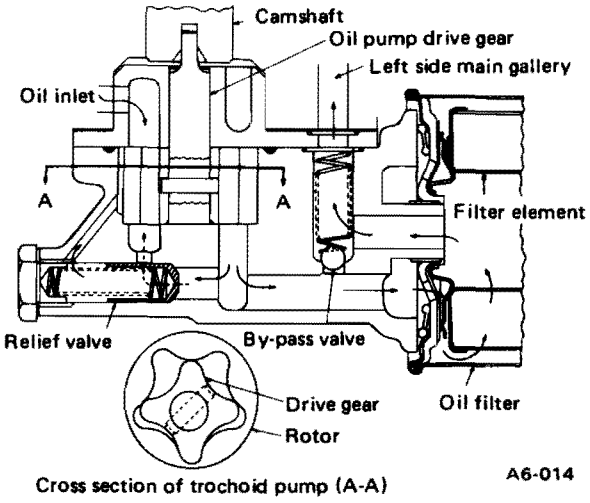

Fig. 3-1

Downloaded from www.Manualslib.com manuals search engine

4. Cooling System Specifications

			SUBARU 1800	SUBARU 1600
Cooling system			Electric fan + Forced cooling water circulation system	
Total coolant capacity			5.5ℓ (5.8 US qt, 4.8 Imp qt)	5.3ℓ (5.6 US qt, 4.7 Imp qt)
Water pump	Type		Centrifugal impeller type	
	Discharge performance I	Discharge	7ℓ/min (7.4 US qt/min, 6.2 Imp qt/min) or more	
		Pump speed – total water head	1,000 rpm – 0.29 m Aq (0.95 ft Aq)	
		Water temperature	75 – 85°C (167 – 185°F)	
	Discharge performance II	Discharge	50ℓ/min (13.2 US gal, 11.0 Imp gal) or more	
		Pump speed – total water head	4,000 rpm – 5.0 m Aq (16.4 ft Aq)	
		Water temperature	75 – 85°C (167 – 185°F)	
	Impeller diameter		64 mm (2.52 in)	
	Number of impeller vanes		5	
	Pump pulley diameter		84 mm (3.31 in)	
Thermostat	Type		Wax pellet type	
	Starts to open		88 ± 1.5°C (190 ± 3°F)	
	Fully opens		100°C (212°F)	
	Valve lift		8 mm (0.31 in)	
	Valve bore		31 mm (1.22 in)	
Thermo valve	Type		Wax pellet type	
	Fully closes		27 ± 2°C (81 ± 3.6°F)	
	Fully opens		25 ± 2°C (77 ± 3.6°F)	
Thermo-switch	ON		95 ± 2°C (203 ± 3.6°F)	
	OFF		91 ± 2°C (196 ± 3.6°F)	
Electric fan	Motor		120W or less	
	Fan dia.		280 mm (11.02 in)	
Radiator	Type		Cross flow, pressure type	
	Total radiation area		AT & 4WD-AT: 7.83 m² (84.3 sq ft) 4WD: 7.29 m² (78.4 sq ft) Others: 5.90 m² (63.5 sq ft)	4.82 m² (51.9 sq ft)
	Radiation capacity		AT & 4WD-AT: 0.789 kW (678 kcal/min, 2,690 BTU/min) 4WD: 0.715 kW (615 kcal/min, 2,440 BTU/min) Others: 0.630 kW (542 kcal/min, 2,151 BTU/min)	0.529 kW (455 kcal/min, 1,805 BTU/min)
			at { • Water flow: 45ℓ/min (11.9 US gal/min, 9.9 Imp gal/min) • Temperature difference between coolant and ambient atmosphere: 65°C (149°F) • Air velocity: 8 m/sec (26 ft/sec)	
	Core dimensions mm (in)		SUBARU 1800 AT & 4WD-AT: 625 × 334 × 32 (24.61 × 13.15 × 1.26) Others: 580 × 334 × 32 (22.83 × 13.15 × 1.26)	
	Radiator capacity		1.9ℓ (2.0 US qt, 1.7 Imp qt)	
	Pressure range in which cap valve is open		Above 88 ± 10 kPa (0.9 ± 0.1 kg/cm², 13 ± 1.4 psi) Below -4.9 to -10 kPa (-0.05 to -0.1 kg/cm², -0.7 to -1.4 psi)	
	Fins		Corrugated fin type	

Downloaded from www.Manualslib.com manuals search engine

5. Coolant

It is recommended to use "SUBARU genuine coolant" when replacing or refilling the engine coolant.

SUBARU COOLANT
(net 18 liter)
Parts No. 000016218

This coolant is anti-freeze, anti-corrosive ethylene glycol coolant, and is especially made for SUBARU vehicle.

NOTE:

a. Avoid using any coolant or only water other than this designated type to prevent corrosion.

b. SUBARU's engine is aluminum alloy, and so special care is necessary.

SUBARU Coolant specifications are as follows:

Coolant Specifications							
Lowest atmospheric anticipated temperature	SUBARU coolant-to-*water ratio (Volume) %	Specific gravity					Freezing point
		at 10°C (50°F)	at 20°C (68°F)	at 30°C (86°F)	at 40°C (104°F)	at 50°C (122°F)	
Above -30°C (-22°F)	50 – 50	1.078	1.072	1.067	1.058	1.055	-36°C (-33°F)

* It is recommended that distilled water be used.

6. Coolant Flow Diagram

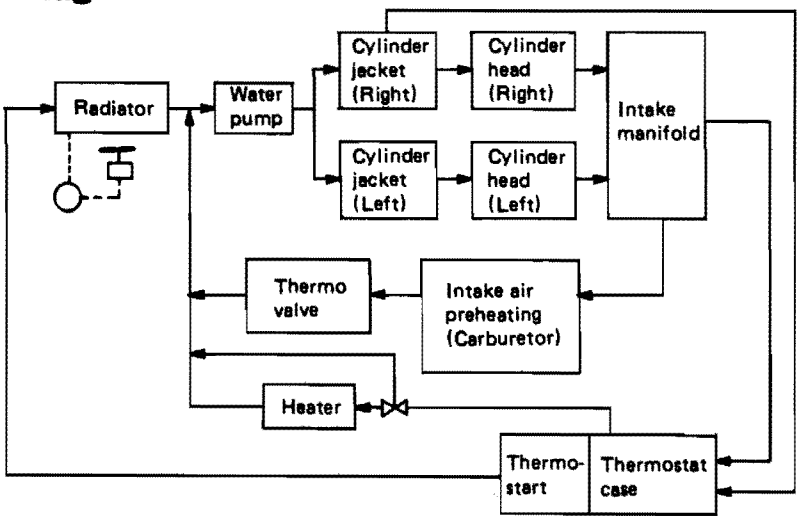

A5-658

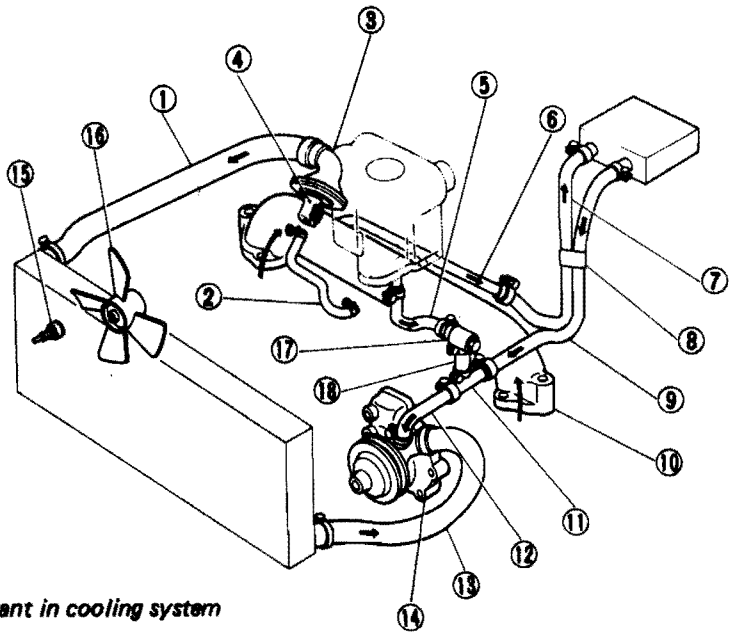

1 Radiator inlet hose
2 Water by-pass hose
3 Thermostat cover
4 Thermostat
5 Water by-pass hose
6 Water by-pass pipe
7 Water by-pass hose
8 3-way cock
9 Water by-pass hose
10 Intake manifold
11 Water by-pass pipe
12 Water by-pass hose
13 Radiator outlet hose
14 Water pump
15 Thermo switch
16 Electric fan
17 Thermo valve
18 Water by-pass hose

Fig. 3-2 Flow of coolant in cooling system

A5-659

Downloaded from www.Manualslib.com manuals search engine

The operation of the cooling system is as follows:

1) Cooling with thermostat closed

When the coolant temperature is under the specified degrees, coolant flows only through the by-pass passage. This limited coolant circulation reduces cooling action, thus shortening engine warm-up time.

By-pass passage:

a. Intake manifold → Carburetor → Thermo valve → Water by-pass base and pipe → Water pump

When the environmental temperature around thermo valve exceeds the specified degrees, the coolant passage from carburetor to water by-pass pipe is shut off by means of thermo valve so that the fuel in carburetor is not heated.

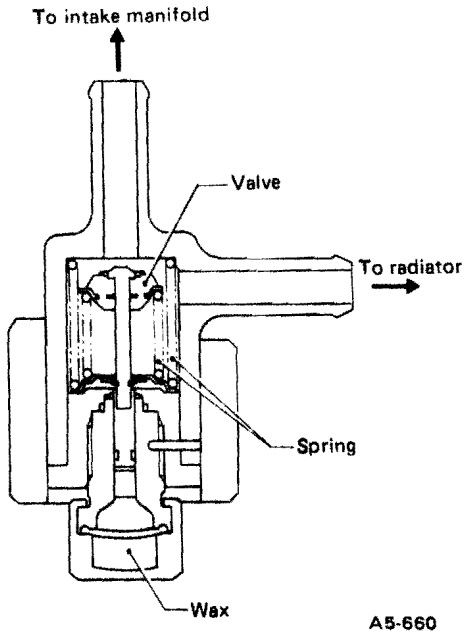

Fig. 3-3 Cross section of thermo valve

b. Intake manifold → Thermostat case → 3-way cock → Water by-pass hose and pipe → Water pump
3-way cock → Heater → Water by-pass hose and pipe

2) Cooling with thermostat open

When the coolant temperature exceeds the specified degrees, thermostat begins to open and coolant flows through radiator and by-pass passage, increasing the cooling function.

3) Cooling with electric fan in operation

When the coolant temperature exceeds the specified degrees, the thermo-switch turns on to operate the electric fan.

7. Automatic Transmission Fluid Cooling System

Automatic transmission fluid cooling system (SUBARU 1800 AT & 4WD-AT)	Radiation capacity	1.570 kW (1,350 kcal/h, 5,357 BTU/h)
		at { • Oil flow: 6ℓ/min (1.6 US gal/min, 1.3 Imp gal/min) • Water flow: 20ℓ/min (5.3 US gal/min, 4.4 Imp gal/min) • Temperature difference between water inlet and oil inlet: 30°C (86°F)

The fluid cooling system of automatic transmission consists of an cooler built in radiator, pipes and hoses to circulate fluid between torque converter and cooler.

Heated fluid circulating through torque converter returns to cooler and is cooled by coolant, thereby being maintained at an adequate temperature.

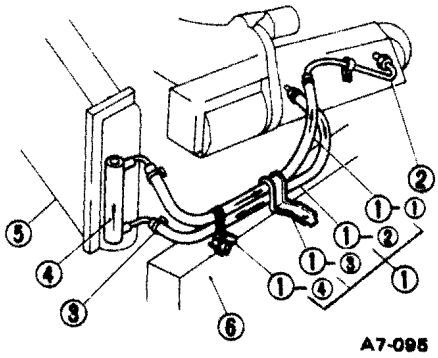

1	Hose assembly	2	Pipe complete
1-1	Outlet hose	3	Hose clamp
1-2	Inlet hose	4	Cooler
1-3	Clamp	5	Radiator
1-4	Clip	6	Side frame

Fig. 3-4 Component parts of automatic transmission fluid cooling system

Downloaded from www.Manualslib.com manuals search engine

8. Hydraulic Valve Lifter

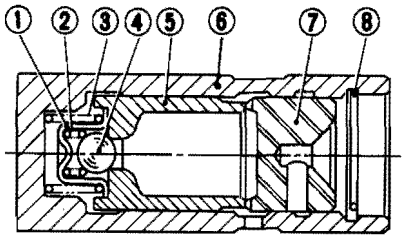

1 Check ball retainer
2 Check ball spring
3 Plunger spring
4 Check ball
5 Plunger
6 Valve body
7 Push rod seat
8 Clip

A5-661

Fig. 3-5 Hydraulic valve lifter

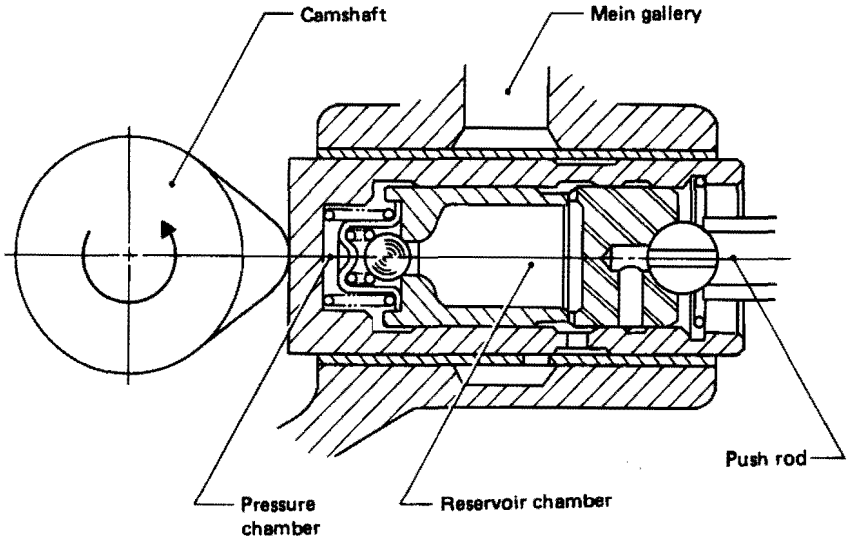

A5-662

Fig. 3-6 Operation of the hydraulic valve lifter

The hydraulic valve lifter always maintains the valve clearance at zero by means of engine oil pressure.

The hydraulic valve lifter consists basically of a push rod seat, plunger, check ball and valve body.

Plunger spring always pushes out plunger. Therefore, plunger moves outward when the clearance to produced in the valve mechanism. At this time, the check ball is separated from the plunger and opens the passage to the pressure chamber. This causes engine oil to flow into the pressure chamber. As this happens, the plunger is pushed up so that the valve clearance is zero. When the valve lifter is pushed by the cam lobe, the check ball comes into contact with the plunger.

In this condition, engine oil pressure in the pressure chamber increases rapidly and this moves the intake or exhaust valve through push rod and valve rocker arm.

NOTE:

a. Immediately after the engine starts, the valve lifter may sometimes make clicking noises within 10 seconds. This is not an indication of abnormality. It occurs because the viscosity of engine oil increases due to low ambient temperature and therefore the valve lifter does not respond accordingly.

b. The valve lifter also clicks continually for a long time if air enters the pressure chamber of the valve lifter (although this occurs very seldom). When this happens, check the engine oil level and add engine oil if the level is at the lower level or below on the gauge. Then, maintain the engine at a speed of 1,500 to 2,000 rpm and allow it to idle for 10 to 20 minutes. The air is then expelled from the pressure chamber and the clicking ceases. (Check the valve lifter according to "3-7, 8 Valve Lifter", if the clicking does not cease.)

This happens also after removing/installing valve rocker ASSY, cylinder head and/or entire engine.

Downloaded from www.Manualslib.com manuals search engine

9. Service Data

Cylinder head	Head surface warpage		Limit	0.05 mm	(0.0020 in)
	Head surface grinding		Limit	0.5 mm	(0.020 in)
	Standard height	1600		89.6 mm	(3.528 in)
		1800		90.6 mm	(3.567 in)
	Valve seat	Refacing angle		90°, 150°	
		Contacting width	Intake	0.7 – 1.3 mm	(0.028 – 0.051 in)
			Exhaust	1.0 – 1.8 mm	(0.039 – 0.071 in)
		Wear limit		0.5 mm	(0.020 in)
	Valve guide	Inner diameter		8.000 – 8.015 mm	(0.3150 – 0.3156 in)
		Protrusion	Intake	17.5 – 18.5 mm	(0.689 – 0.728 in)
			Exhaust	22.5 – 23.5 mm	(0.886 – 0.925 in)
Valve	Valve overall length	Intake		109 mm	(4.29 in)
		Exhaust		109.3 mm	(4.30 in)
	Valve head edge thickness	Intake	STD	1.0 mm	(0.039 in)
			Limit	0.5 mm	(0.020 in)
		Exhaust	STD	1.3 mm	(0.051 in)
			Limit	0.8 mm	(0.031 in)
	Stem diameter	Intake		7.950 – 7.965 mm	(0.3130 – 0.3136 in)
		Exhaust		7.945 – 7.960 mm	(0.3128 – 0.3134 in)
	Stem oil clearance	Intake	STD	0.035 – 0.065 mm	(0.0014 – 0.0026 in)
			Limit	0.15 mm	(0.0059 in)
		Exhaust	STD	0.040 – 0.070 mm	(0.0016 – 0.0028 in)
			Limit	0.15 mm	(0.0059 in)
Valve spring	• With solid valve lifter				
	Free length		Outer spring	45.3 mm	(1.783 in)
			Inner spring	48.8 mm	(1.921 in)
	Tension/spring height		Outer spring	146.1 – 169.7 N/39.5 mm (14.9 – 17.3 kg/39.5 mm, 32.9 – 38.1 lb/1.555 in)	
				500.2 – 568.8 N/30.5 mm (51.0 – 58.0 kg/30.5 mm, 112.5 – 127.9 lb/1.201 in)	
			Inner spring	84.3 – 98.1 N/37.5 mm (8.6 – 10.0 kg/37.5 mm, 19.0 – 22.1 lb/1.476 in)	
				185.4 – 214.8 N/285 mm (18.9 – 21.9 kg/28.5 mm, 41.7 – 48.3 lb/1.122 in)	
	Squareness		Outer spring	2.0 mm or less	(0.079 in or less)
			Inner spring	2.1 mm or less	(0.083 in or less)
	• With hydraulic valve lifter				
	Free length		Outer spring	48.5 mm	(1.909 in)
			Inner spring	53.0 mm	(2.087 in)

Downloaded from www.Manualslib.com manuals search engine

Valve spring (continued)	Tension/spring height	Outer spring	228.5 – 261.8 N/39.5 mm (23.3 – 26.7 kg/39.5 mm, 51.4 – 58.9 lb/1.555 in)	
			518.8 – 599.2 N/32.0 mm (52.9 – 61.1 kg/32.0 mm, 116.6 – 134.7 lb/1.260 in)	
		Inner spring	115.7 – 133.4 N/37.5 mm (11.8 – 13.6 kg/37.5 mm, 26.0 – 30.6 lb/1.476 in)	
			201.0 – 230.5 N/30.0 mm (20.5 – 23.5 kg/30.0 mm, 45.2 – 51.8 lb/1.181 in)	
	Squareness	Outer spring	2.1 mm or less	(0.083 in or less)
		Inner spring	2.3 mm or less	(0.091 in or less)
Valve rocker	Inner diameter of rocker arm		18.016 – 18.034 mm	(0.7093 – 0.7100 in)
	Outer diameter of rocker shaft		17.982 – 18.003 mm	(0.7080 – 0.7088 in)
	Rocker arm to rocker shaft clearance		0.013 – 0.052 mm	(0.0005 – 0.0020 in)
Valve lifter	• Solid valve lifter			
	Lifter hole inner diameter of crankcase		21.000 – 21.021 mm	(0.8268 – 0.8276 in)
	Outer diameter of lifter		20.949 – 20.970 mm	(0.8248 – 0.8256 in)
	Lifter to lifter hole clearance	STD	0.030 – 0.072 mm	(0.0012 – 0.0028 in)
		Limit	0.100 mm	(0.0039 in)
	• Hydraulic valve lifter			
	Lifter hole inner diameter of crankcase		20.988 – 21.040 mm	(0.8263 – 0.8283 in)
	Outer diameter of lifter		20.950 – 20.968 mm	(0.8248 – 0.8255 in)
	Lifter to lifter hole clearance	STD	0.020 – 0.090 mm	(0.0008 – 0.0035 in)
		Limit	0.100 mm	(0.0039 in)
Push rod	Overall length	1600 (Knurling: 2)	219 – 219.4 mm	(8.62 – 8.64 in)
		1800 with solid valve lifter (Knurling: 1)	230.7 – 231.1 mm	(9.08 – 9.10 in)
		1800 with hydraulic valve lifter (Knurling: nothing) (Steel tube)	231.7 – 232.2 mm	(9.12 – 9.14 in)
	Deflection at center		0.4 mm	(0.016 in) or less
Crankcase	Cylinder bore (Both 1800 and 1600)	Diameter	91.985 – 92.015 mm	(3.6214 – 3.6226 in)
		Taper STD	0.015 mm	(0.0006 in)
		Limit	0.050 mm	(0.0020 in)
		Out of roundness STD	0.010 mm	(0.0004 in)
		Limit	0.050 mm	(0.0020 in)
	Cylinder to piston clearance	STD	0.010 – 0.040 mm	(0.0004 – 0.0016 in)
		Limit	0.060 mm	(0.0024 in)
	Enlarging limit of cylinder inner diameter		0.50 mm	(0.0197 in)
	Inner diameter difference limit between cylinders		0.05 mm	(0.0020 in)
	Case surface warpage (mating with head)	Limit	0.05 mm	(0.0020 in)
	Protrusion of stud bolt from mating surface	1800	91.5 – 93.5 mm	(3.602 – 3.681 in)
		1600	90.5 – 92.5 mm	(3.563 – 3.642 in)

Downloaded from www.Manualslib.com manuals search engine

Piston and Piston pin	Piston outer diameter		STD	91.960 – 91.990 mm	(3.6205 – 3.6216 in)
		0.25 mm (0.0098 in)	OS	92.210 – 92.240 mm	(3.6303 – 3.6315 in)
		0.50 mm (0.0197 in)	OS	92.460 – 92.490 mm	(3.6402 – 3.6413 in)
	Piston pin hole inner diameter of piston			20.999 – 21.009 mm	(0.8267 – 0.8271 in)
	Piston pin outer diameter			20.992 – 21.000 mm	(0.8265 – 0.8268 in)
	Piston pin to hole in piston clearance			0.004 – 0.010 mm	(0.0002 – 0.0004 in)
Piston ring	Piston ring gap	Top ring	STD	0.20 – 0.35 mm	(0.0079 – 0.0138 in)
			Limit	1.0 mm	(0.039 in)
		Second ring	STD	0.20 – 0.35 mm	(0.0079 – 0.0138 in)
			Limit	1.0 mm	(0.039 in)
		Oil ring rail	STD	0.20 – 0.90 mm	(0.0079 – 0.0354 in)
			Limit	1.5 mm	(0.059 in)
	Piston ring to piston ring groove clearance	Top ring	STD	0.04 – 0.08 mm	(0.0016 – 0.0031 in)
			Limit	0.15 mm	(0.0059 in)
		Second ring	STD	0.03 – 0.07 mm	(0.0012 – 0.0028 in)
			Limit	0.15 mm	(0.0059 in)
		Oil ring		0	
Connecting rod	Distance between big end and small end hole		1800	116.95 – 117.05 mm	(4.6043 – 4.6083 in)
			1600	109.95 – 110.05 mm	(4.3287 – 4.3327 in)
	Bend or twist per 100 mm (3.94 in) in length		Limit	0.10 mm	(0.0039 in)
	Thrust clearance		STD	0.070 – 0.330 mm	(0.0028 – 0.0130 in)
			Limit	0.40 mm	(0.0157 in)
	Piston pin to bushing clearance			0 – 0.022 mm	(0 – 0.0009 in)
	Bushing bore			21.000 – 21.016 mm	(0.8268 – 0.8274 in)
Connecting rod bearing	Thickness at center		STD	1.477 – 1.485 mm	(0.0581 – 0.0585 in)
		0.05 mm (0.0020 in)	US	1.505 – 1.510 mm	(0.0593 – 0.0594 in)
		0.25 mm (0.0098 in)	US	1.605 – 1.610 mm	(0.0632 – 0.0634 in)
Crankshaft	Bend limit			0.035 mm	(0.0014 in)
	Crankpin and crank journal	Out-of-roundness		0.03 mm or less	(0.0012 in or less)
		Taper limit		0.07 mm	(0.0028 in)
		Grinding limit		0.25 mm	(0.0098 in)
	Thrust clearance		STD	0.01 – 0.095 mm	(0.0004 – 0.0037 in)
			Limit	0.30 mm	(0.0118 in)
	Crank journal outer diameter	1800	STD	54.955 – 54.970 mm	(2.1636 – 2.1642 in)
		0.03 mm (0.0012 in)	US	54.925 – 54.940 mm	(2.1624 – 2.1630 in)
		0.05 mm (0.0020 in)	US	54.905 – 54.920 mm	(2.1616 – 2.1622 in)
		0.25 mm (0.0098 in)	US	54.705 – 54.720 mm	(2.1537 – 2.1543 in)
		1600 Front & rear	STD	49.957 – 49.970 mm	(1.9668 – 1.9673 in)
		0.03 mm (0.0012 in)	US	49.927 – 49.940 mm	(1.9656 – 1.9661 in)
		0.05 mm (0.0020 in)	US	49.907 – 49.920 mm	(1.9648 – 1.9654 in)
		0.25 mm (0.0098 in)	US	49.707 – 49.720 mm	(1.9570 – 1.9575 in)
		Center	STD	49.970 – 49.982 mm	(1.9673 – 1.9678 in)
		0.03 mm (0.0012 in)	US	49.940 – 49.952 mm	(1.9661 – 1.9666 in)
		0.05 mm (0.0020 in)	US	49.920 – 49.932 mm	(1.9654 – 1.9658 in)
		0.25 mm (0.0098 in)	US	49.720 – 49.732 mm	(1.9575 – 1.9579 in)

Downloaded from www.Manualslib.com manuals search engine

Crankshaft (continued)	Crank journal oil clearance	1800	Front & rear	STD	0.010 – 0.030 mm	(0.0004 – 0.0012 in)
				Limit	0.055 mm	(0.0022 in)
			Center	STD	0.010 – 0.025 mm	(0.0004 – 0.0010 in)
				Limit	0.045 mm	(0.0018 in)
		1600	Front & rear	STD	0.010 – 0.035 mm	(0.0004 – 0.0014 in)
				Limit	0.055 mm	(0.0022 in)
			Center	STD	0.010 – 0.030 mm	(0.0004 – 0.0012 in)
				Limit	0.045 mm	(0.0018 in)
	Crankpin outer diameter			STD	44.995 – 45.010 mm	(1.7715 – 1.7720 in)
			0.05 mm (0.0020 in)	US	44.945 – 44.960 mm	(1.7695 – 1.7701 in)
			0.25 mm (0.0098 in)	US	44.745 – 44.760 mm	(1.7616 – 1.7622 in)
	Crankpin oil clearance			STD	0.020 – 0.070 mm	(0.0008 – 0.0028 in)
				Limit	0.1 mm	(0.0039 in)
Crankshaft bearing	Thickness at center	1800	Front & rear	STD	2.015 – 2.019 mm	(0.0793 – 0.0795 in)
			0.03 mm (0.0012 in)	US	2.030 – 2.034 mm	(0.0799 – 0.0801 in)
			0.05 mm (0.0020 in)	US	2.040 – 2.044 mm	(0.0803 – 0.0805 in)
			0.25 mm (0.0098 in)	US	2.140 – 2.144 mm	(0.0843 – 0.0844 in)
			Center	STD	2.015 – 2.028 mm	(0.0793 – 0.0798 in)
			0.03 mm (0.0012 in)	US	2.030 – 2.043 mm	(0.0799 – 0.0804 in)
			0.05 mm (0.0020 in)	US	2.040 – 2.053 mm	(0.0803 – 0.0808 in)
			0.25 mm (0.0098 in)	US	2.140 – 2.153 mm	(0.0843 – 0.0848 in)
		1600	Front & rear	STD	2.001 – 2.008 mm	(0.0788 – 0.0791 in)
			0.03 mm (0.0012 in)	US	2.017 – 2.030 mm	(0.0794 – 0.0799 in)
			0.05 mm (0.0020 in)	US	2.022 – 2.035 mm	(0.0796 – 0.0801 in)
			0.25 mm (0.0098 in)	US	2.122 – 2.135 mm	(0.0835 – 0.0841 in)
			Center	STD	2.003 – 2.015 mm	(0.0789 – 0.0793 in)
			0.03 mm (0.0012 in)	US	2.017 – 2.030 mm	(0.0794 – 0.0799 in)
			0.05 mm (0.0020 in)	US	2.022 – 2.035 mm	(0.0796 – 0.0801 in)
			0.25 mm (0.0098 in)	US	2.122 – 2.135 mm	(0.0835 – 0.0841 in)
Camshaft	Cam lobe height			STD	*1: 32.24 – 32.34 mm	(1.2693 – 1.2732 in)
					*2: 35.90 – 36.00 mm	(1.4134 – 1.4173 in)
				Wear limit	0.15 mm	(0.0059 in)
	Bend limit				0.05 mm	(0.0020 in)
	Thrust clearance			STD	0.020 – 0.090 mm	(0.0008 – 0.0035 in)
				Limit	0.20 mm	(0.0079 in)
	Camshaft journal outer diameter		Front & center	1600	25.959 – 25.975 mm	(1.0220 – 1.0226 in)
				1800	31.959 – 31.975 mm	(1.2582 – 1.2589 in)
			Rear		35.959 – 35.975 mm	(1.4157 – 1.4163 in)
	Camshaft journal to cam bore clearance			STD	0.025 – 0.059 mm	(0.0010 – 0.0023 in)
				Limit	0.100 mm	(0.0039 in)
Camshaft gear	Run out			Limit	0.25 mm	(0.0098 in)
	Crankshaft gear to cam gear backlash			STD	0.010 – 0.050 mm	(0.0004 – 0.0020 in)
				Limit	0.10 mm	(0.0039 in)

*1: With solid valve lifter
*2: With hydraulic valve lifter

Downloaded from www.Manualslib.com manuals search engine

Oil pump	Drive gear outer diameter			29.70 – 29.74 mm	(1.1693 – 1.1709 in)
	Rotor outer diameter			40.53 – 40.56 mm	(1.5957 – 1.5968 in)
	Drive gear to rotor tip clearance		STD	0.02 – 0.12 mm	(0.0008 – 0.0047 in)
			Limit	0.2 mm	(0.008 in)
	Rotor to case and gear to case axial clearance		STD	0.03 – 0.13 mm	(0.0012 – 0.0051 in)
			Limit	0.2 mm	(0.008 in)
	Rotor to case radial clearance		STD	0.15 – 0.21 mm	(0.0059 – 0.0083 in)
			Limit	0.25 mm	(0.0098 in)
	Relief valve spring		Free length	47.1 mm	(1.854 in)
			Installed length	33.5 mm	(1.319 in)
			Load when installed	38.05 – 41.97 N (3.88 – 4.28 kg, 8.56 – 9.44 lb)	
	By-pass valve spring	Free length	1600	40.7 mm	(1.602 in)
			1800	37.1 mm	(1.461 in)
		Installed length	1600	31.1 mm	(1.224 in)
			1800	25.1 mm	(0.988 in)
		Load when installed	1600	3.580 – 3.972 N (0.365 – 0.405 kg, 0.805 – 0.893 lb)	
			1800	5.178 – 6.159 N (0.528 – 0.628 kg, 1.164 – 1.385 lb)	
	Oil filter filtration area			0.15 m^2	(1.6 sq ft)

Downloaded from www.Manualslib.com manuals search engine

3-2. Component Parts

1. Crankcase

Thread size	Torque
10 mm	39 - 47 N·m (4.0 - 4.8 kg-m, 29 - 35 ft-lb)
8 mm	23 - 26 N·m (2.3 - 2.7 kg-m, 17 - 20 ft-lb)
6 mm	4.4 - 5.4 N·m (0.45 - 0.55 kg-m, 3.3 - 4.0 ft-lb)

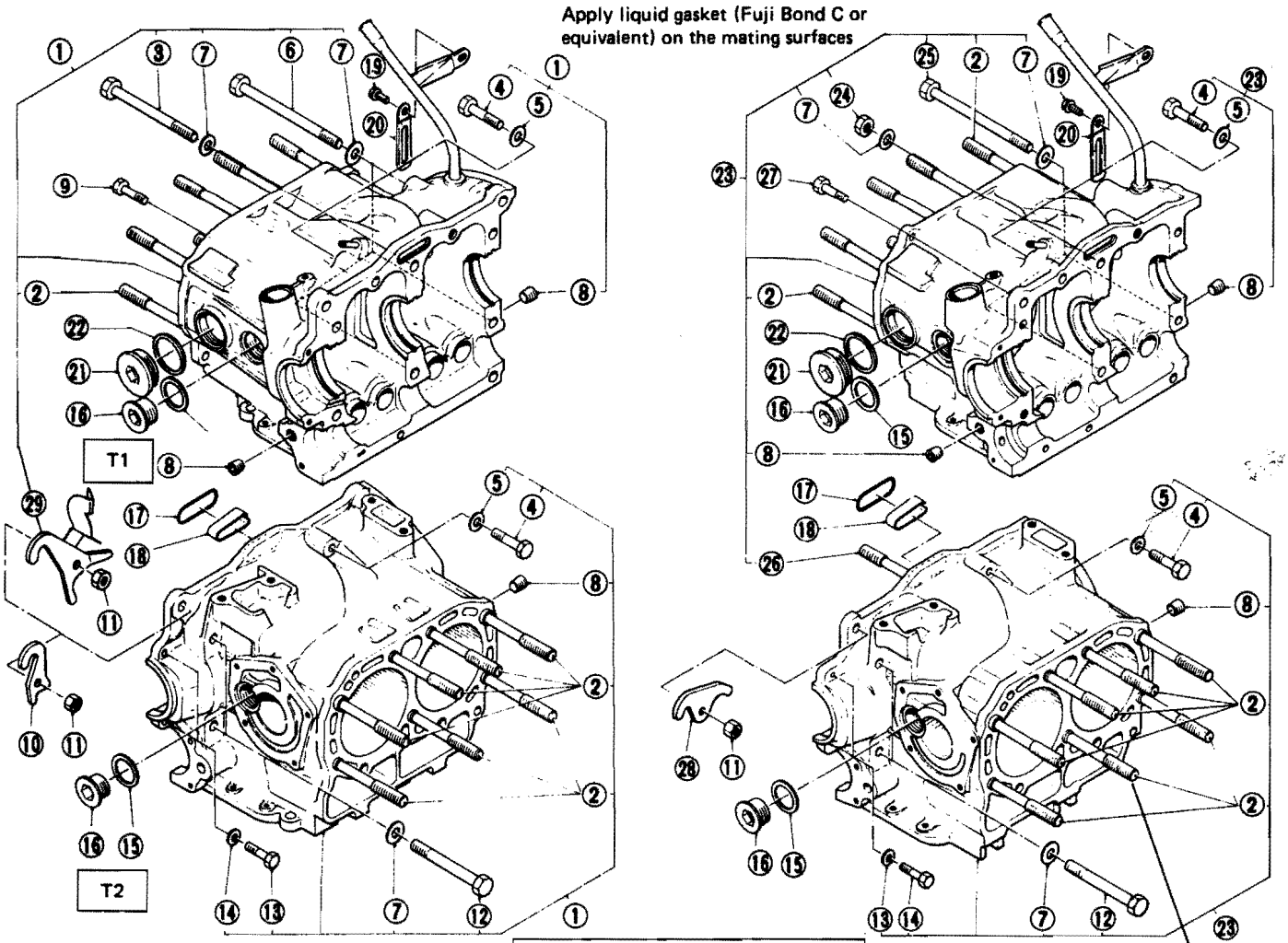

- Apply liquid gasket (Fuji Bond C or equivalent) on the thread

Tightening torque N·m (kg-m, ft-lb)
T1: 25 - 34 (2.5 - 3.5, 18 - 25)
T2: 62 - 76 (6.3 - 7.7, 46 - 56)
T3: 34 - 44 (3.5 - 4.5, 25 - 33)

1 Crankcase assembly
2 Stud bolt
3 Bolt (10 x 108 x 28 mm)
4 Bolt
5 Washer
6 Bolt (10 x 145 x 28 mm)
7 Washer (10.5 x 18 x 2 mm)
8 Main gallery plug
9 Bolt
10 Crankcase front hanger (Hitachi carburetor)
11 Nut
12 Bolt (10 x 70 x 28 mm)
13 Bolt
14 Washer
15 Gasket (26.2 x 31.5 x 1 mm)
16 Crankcase plug
17 Crankcase O-ring
18 Back up ring
19 Bolt & washer (6 x 13 x 13 mm)
20 Clip
21 Crankcase plug
22 Gasket (36.2 x 44 x 1 mm)
23 Crankcase assembly
24 Nut (10 x 8 mm)
25 Bolt (10 x 135 x 28 mm)
26 Stud bolt (10 x 120 x 26 mm)
27 Bolt
28 Crankcase front hanger
29 Crankcase front hanger (C-W carburetor)

Fig. 3-8 Crankcase

A5-588

Downloaded from www.Manualslib.com manuals search engine

2. Cylinder Heads

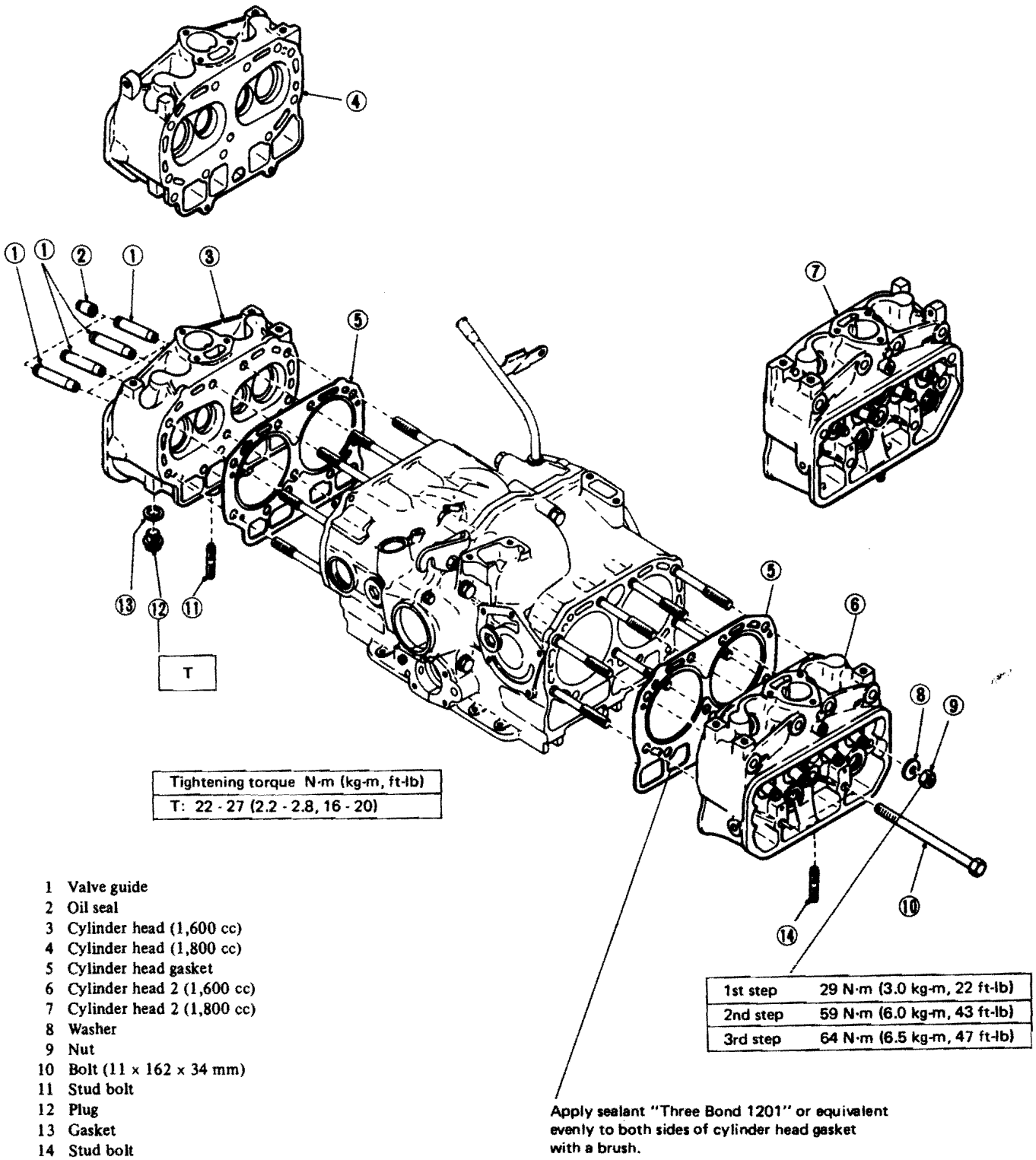

1 Valve guide
2 Oil seal
3 Cylinder head (1,600 cc)
4 Cylinder head (1,800 cc)
5 Cylinder head gasket
6 Cylinder head 2 (1,600 cc)
7 Cylinder head 2 (1,800 cc)
8 Washer
9 Nut
10 Bolt (11 x 162 x 34 mm)
11 Stud bolt
12 Plug
13 Gasket
14 Stud bolt

Fig. 3-9 Cylinder heads

Downloaded from www.Manualslib.com manuals search engine

3. Flywheel Housing and Fittings

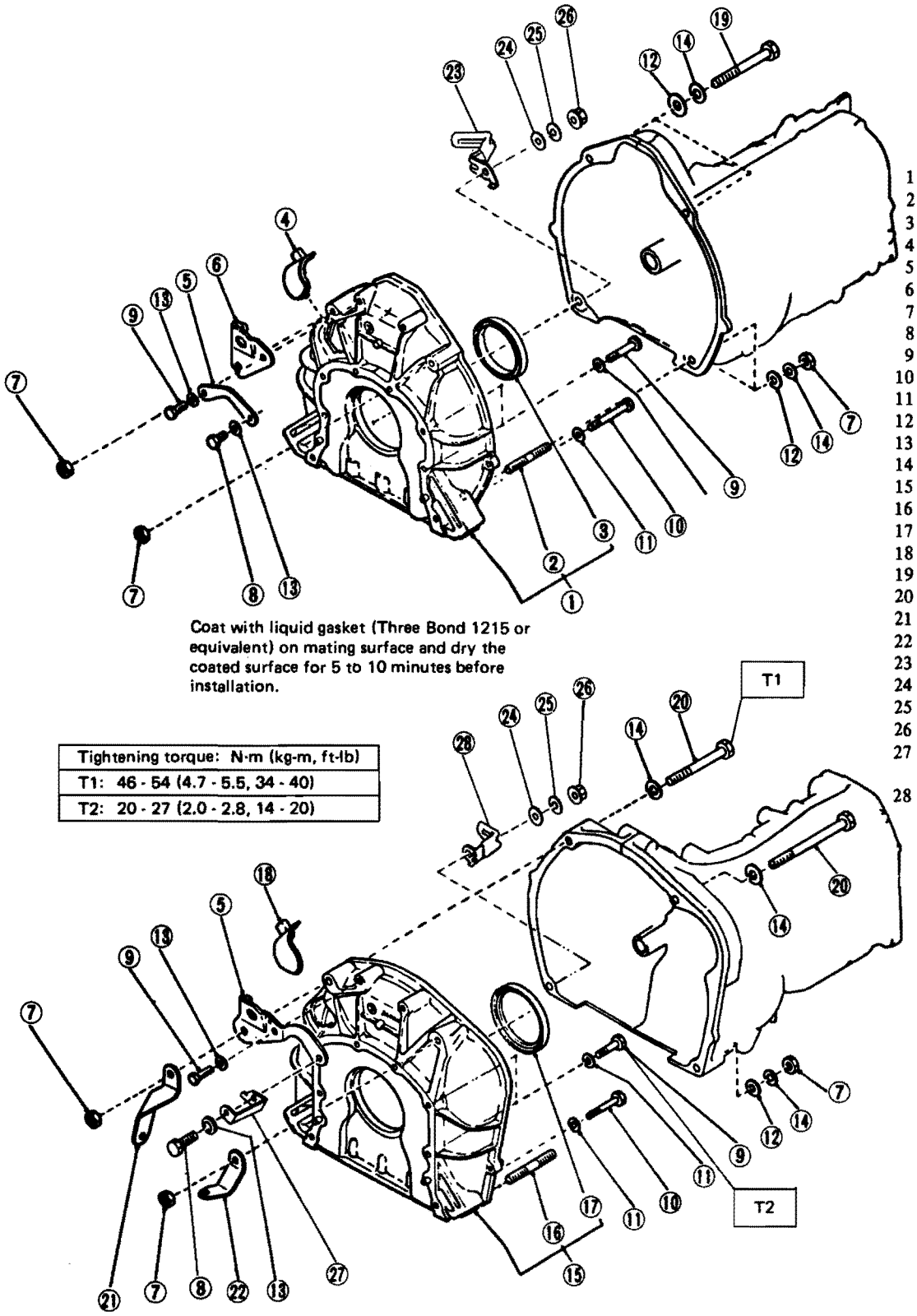

Tightening torque: N·m (kg-m, ft-lb)
T1: 46 - 54 (4.7 - 5.5, 34 - 40)
T2: 20 - 27 (2.0 - 2.8, 14 - 20)

1 Flywheel housing CP
2 Stud
3 Oil seal (70 x 87 x 8.5 mm)
4 Timing hole plug
5 Crankcase rear hanger
6 Pitching stopper bracket
7 Nut
8 Bolt
9 Bolt
10 Bolt
11 Washer
12 Washer
13 Spring washer
14 Spring washer
15 Flywheel housing CP
16 Stud
17 Oil seal (76 x 93 x 10 mm)
18 Timing hole plug
19 Bolt
20 Bolt
21 Stiffener
22 Stiffener 2
23 Clip
24 Washer
25 Spring washer
26 Bolt
27 Accelerator cable bracket (C-W carburetor)
28 Clip

Fig. 3-10 Flywheel housing and fittings

A5-666

Downloaded from www.Manualslib.com manuals search engine

4. Crankshaft and Related Parts

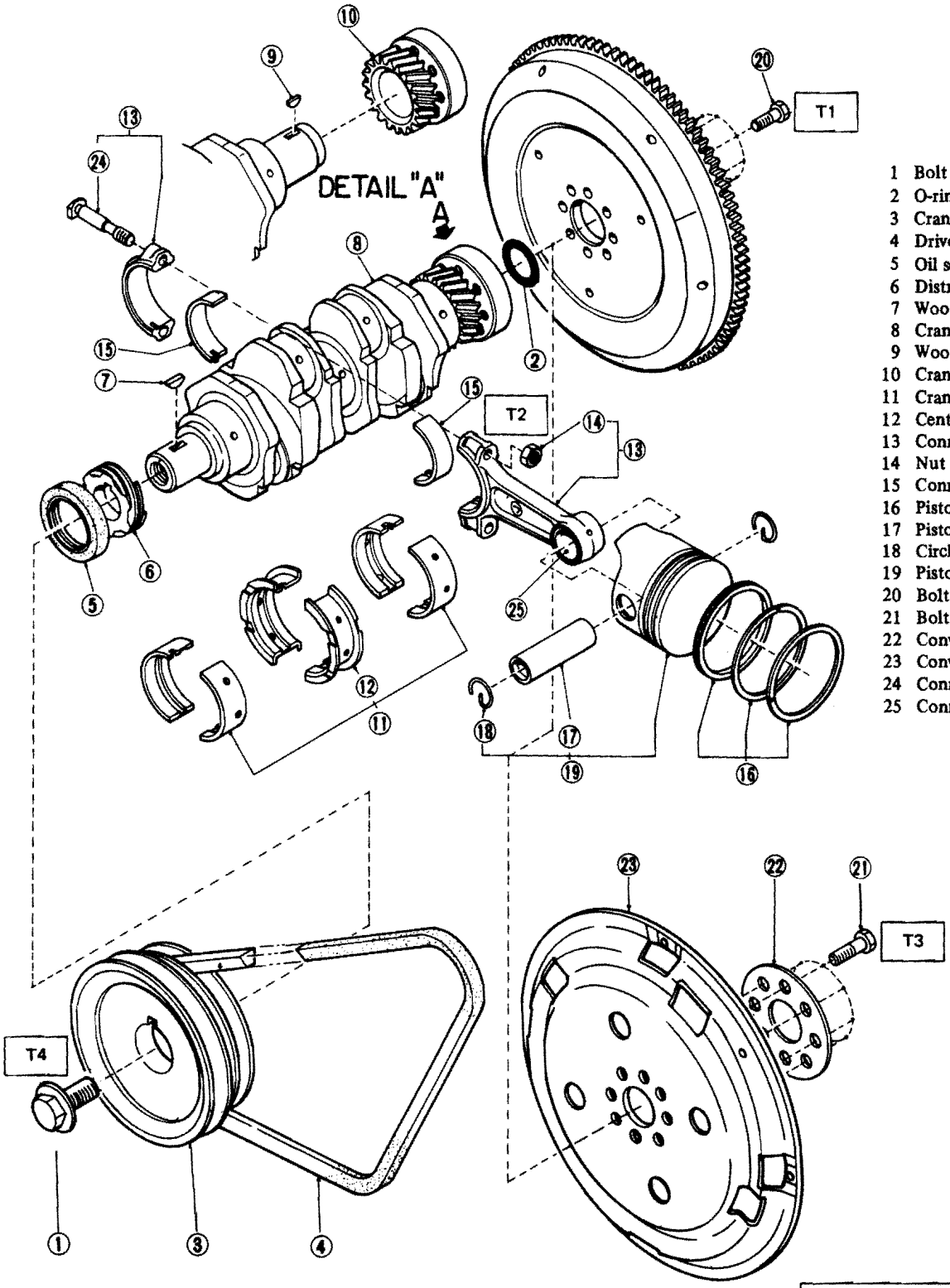

1 Bolt
2 O-ring
3 Crankshaft pulley
4 Drive belt
5 Oil seal
6 Distributor drive gear
7 Woodruff key
8 Crankshaft
9 Woodruff key
10 Crankshaft gear
11 Crankshaft bearing set
12 Center bearing set
13 Connecting rod CP
14 Nut
15 Connecting rod bearing set
16 Piston ring set
17 Piston pin
18 Circlip
19 Piston set
20 Bolt (MT)
21 Bolt (AT)
22 Converter back plate (AT)
23 Converter drive plate (AT)
24 Connecting rod bolt
25 Connecting rod bushing

Tightening torque: N·m (kg-m, ft-lb)
T1: 41 - 45 (4.2 - 4.6, 30 - 33)
T2: 39 - 42 (4.0 - 4.3, 29 - 31)
T3: 49 - 53 (5.0 - 5.4, 36 - 39)
T4: 64 - 74 (6.5 - 7.5, 47 - 54)

- Apply engine oil on the thread.
- Apply liquid gasket (Three Bond 1215 or equivalent) on the flange seat.

Fig. 3-11 Crankshaft and related parts

A 5-667

Downloaded from www.Manualslib.com manuals search engine

5. Valve System

Tightening torque: N·m (kg-m, ft-lb)
T: 3 - 4 (0.3 - 0.4, 2.2 - 2.9)

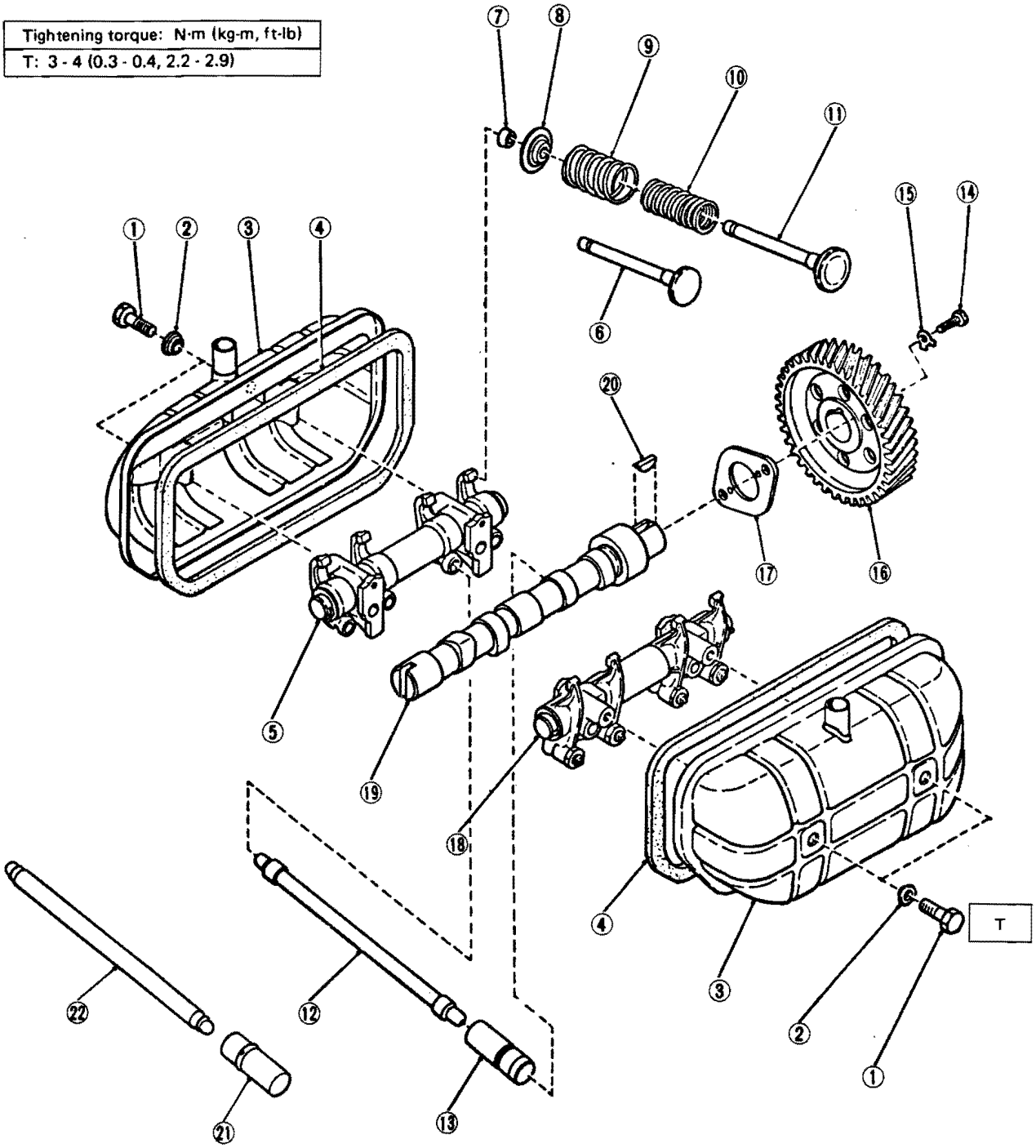

1 Bolt
2 Valve rocker cover seal washer
3 Valve rocker cover
4 Valve rocker cover gasket
5 Valve rocker ASSY (R.H.)
6 Exhaust valve
7 Valve spring retainer key
8 Valve spring retainer
9 Valve spring
10 Valve spring 2
11 Intake valve
12 Valve push rod
13 Valve lifter
14 Bolt
15 Lock washer
16 Camshaft gear
17 Camshaft plate
18 Valve rocker ASSY
19 Camshaft
20 Woodruff key
21 Hydraulic valve lifter
22 Push rod (for hydraulic valve lifter)

Fig. 3-12 Valve system

A5-668

Downloaded from www.Manualslib.com manuals search engine

6. Valve Rocker

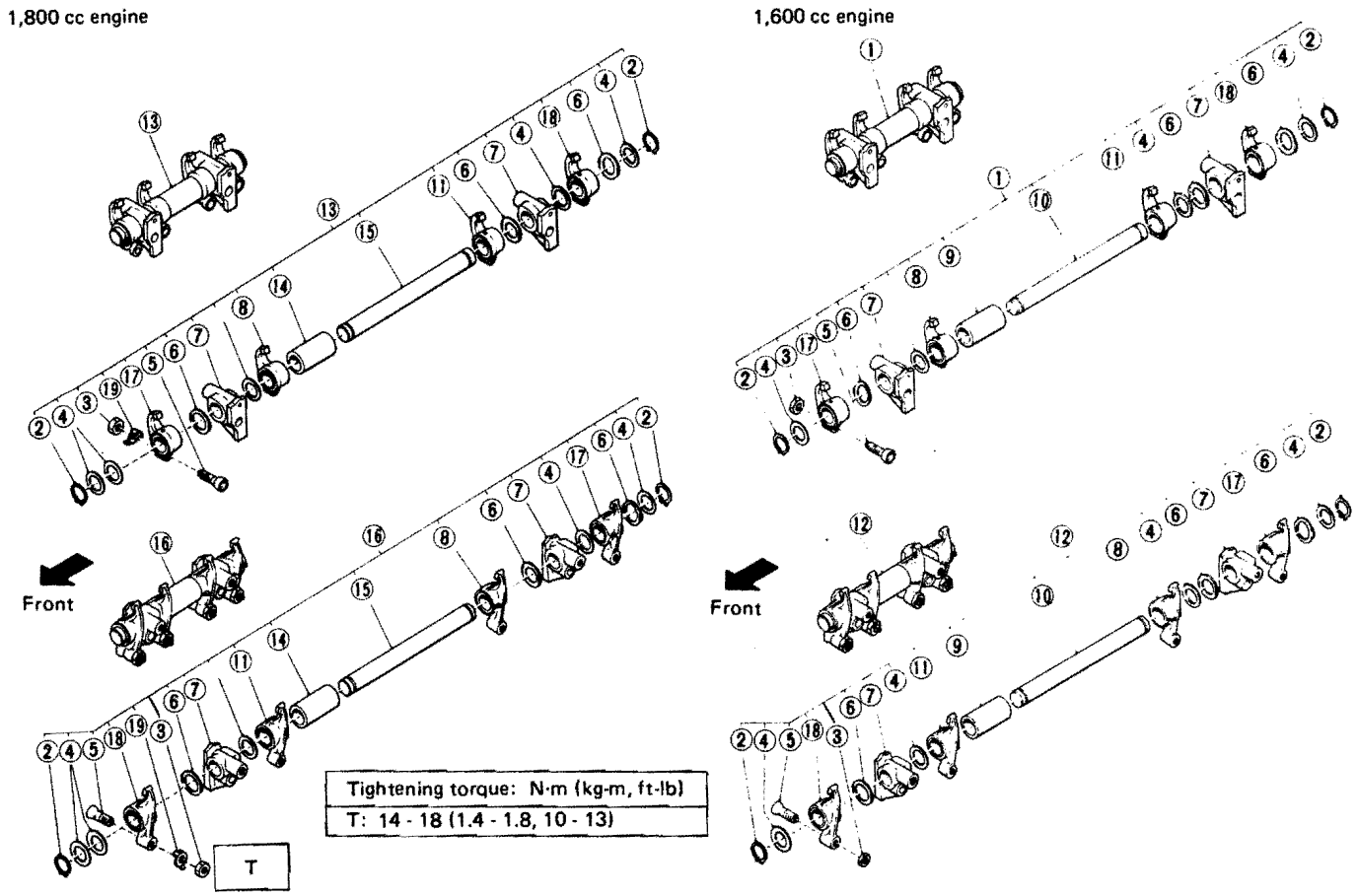

1 Valve rocker ASSY (R.H.)
2 Snap ring
3 Nut
4 Washer
5 Valve rocker screw
6 Rocker shaft spring washer
7 Rocker shaft supporter
8 Valve rocker arm CP
9 Rocker shaft spacer
10 Valve rocker shaft
11 Valve rocker arm CP 2
12 Valve rocker ASSY (L.H.)
13 Valve rocker ASSY (R.H.)
14 Rocker shaft spacer
15 Valve rocker shaft
16 Valve rocker ASSY (L.H.)
17 Valve rocker arm
18 Valve rocker arm 2
19 Lock washer (only for hydraulic valve lifter)

Fig. 3-13 Valve rocker

Downloaded from www.Manualslib.com manuals search engine

7. Emission Control Equipment

1) Hitachi Carburetor Type

*: Except 49 States 4WD & 4WD-AT and Canada

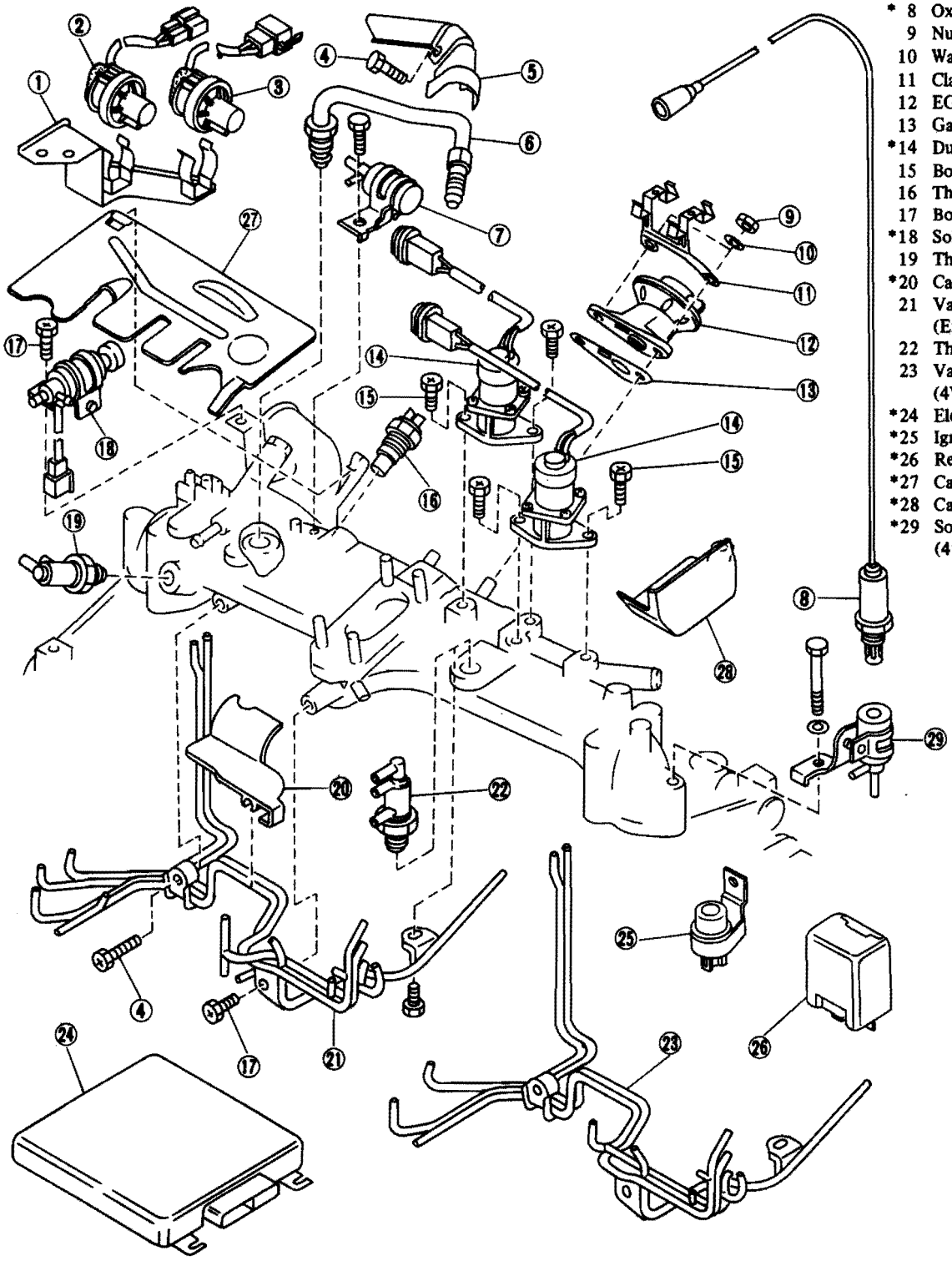

* 1 Bracket
* 2 Vacuum switch I
* 3 Vacuum switch II
4 Bolt & washer
5 EGR pipe cover
6 EGR pipe
* 7 Solenoid valve III
* 8 Oxygen sensor
9 Nut
10 Washer
11 Clamp
12 EGR valve
13 Gasket
*14 Duty solenoid valve
15 Bolt & washer
16 Thermosensor
17 Bolt & washer
*18 Solenoid valve I
19 Thermo vacuum valve II
*20 Carburetor protector 3
21 Vacuum pipe CP (Except 4WD and AT)
22 Thermo vacuum valve I
23 Vacuum pipe CP (4WD and AT)
*24 Electronic control module
*25 Ignition relay
*26 Revolution sensor
*27 Carburetor protector
*28 Carburetor protector 2
*29 Solenoid valve II (49 States only)

Fig. 3-14 Emission control equipment (Hitachi carburetor type)

A5-670

Downloaded from www.Manualslib.com manuals search engine

2) C-W Carburetor Type

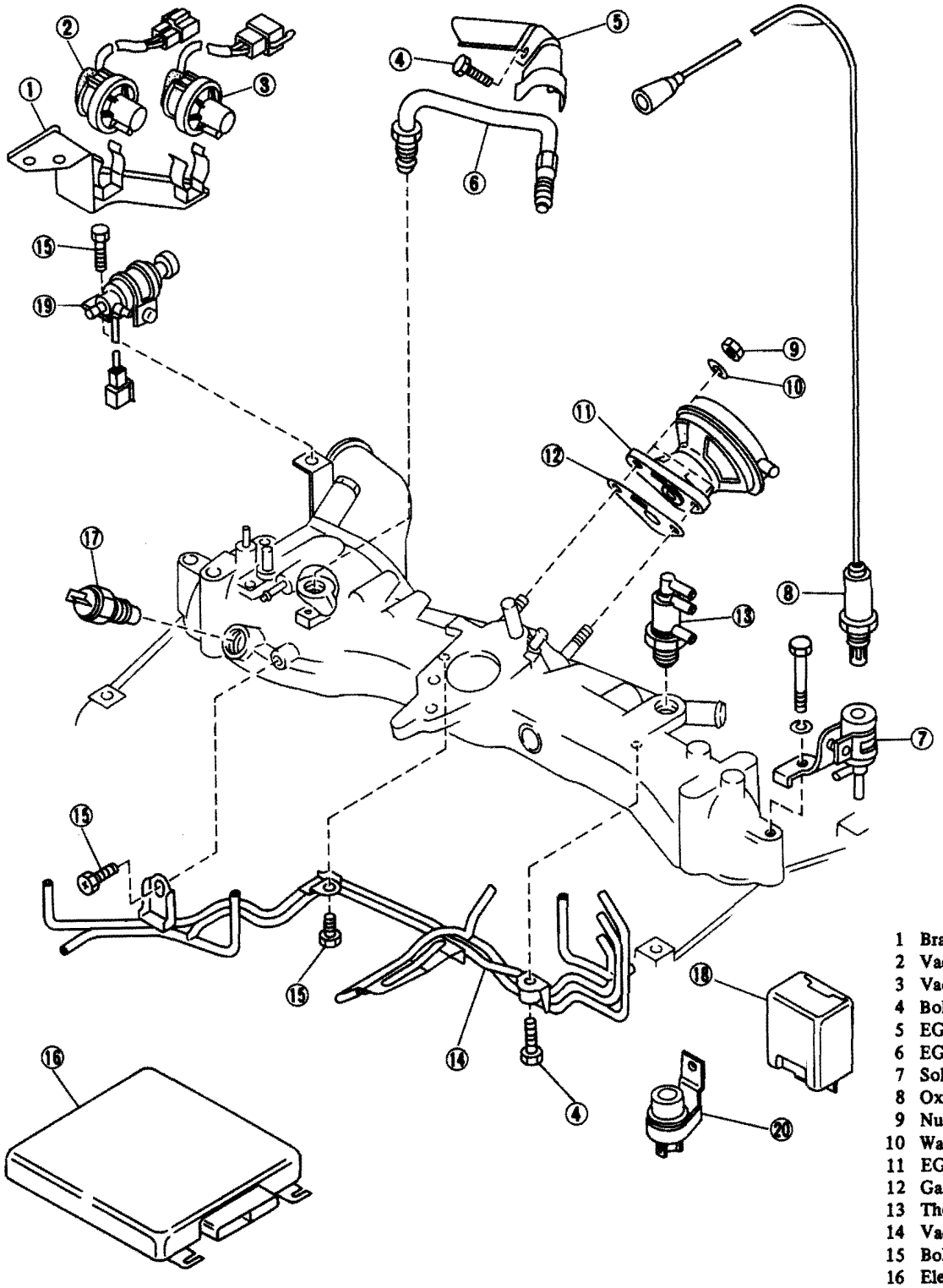

1 Bracket
2 Vacuum switch I
3 Vacuum switch II
4 Bolt & washer
5 EGR pipe cover
6 EGR pipe
7 Solenoid valve II
8 Oxygen sensor
9 Nut
10 Washer
11 EGR valve
12 Gasket
13 Thermo vacuum valve I
14 Vacuum pipe CP
15 Bolt & washer
16 Electronic control mudule
17 Thermosensor
18 Revolution sensor
19 Solenoid valve I
20 Ignition relay

Fig. 3-15 Emission control equipment (C-W carburetor type)

A5-671

Downloaded from www.Manualslib.com manuals search engine

8. Air Injection System

*1 Electronic control module
*2 Solenoid valve I
*3 Check valve II
4 Air induction hose
5 Thermosensor
6 Air cleaner
7 Silencer
8 Air induction hose
9 Air suction valve
10 Air suction pipe
11 Air suction valve II
12 Silencer
13 Air suction pipe
14 Silencer
15 Air induction hose
16 Air suction valve III (49 States 4WD & 4WD-AT and Canada)

*: Except 49 States 4WD & 4WD-AT and Canada

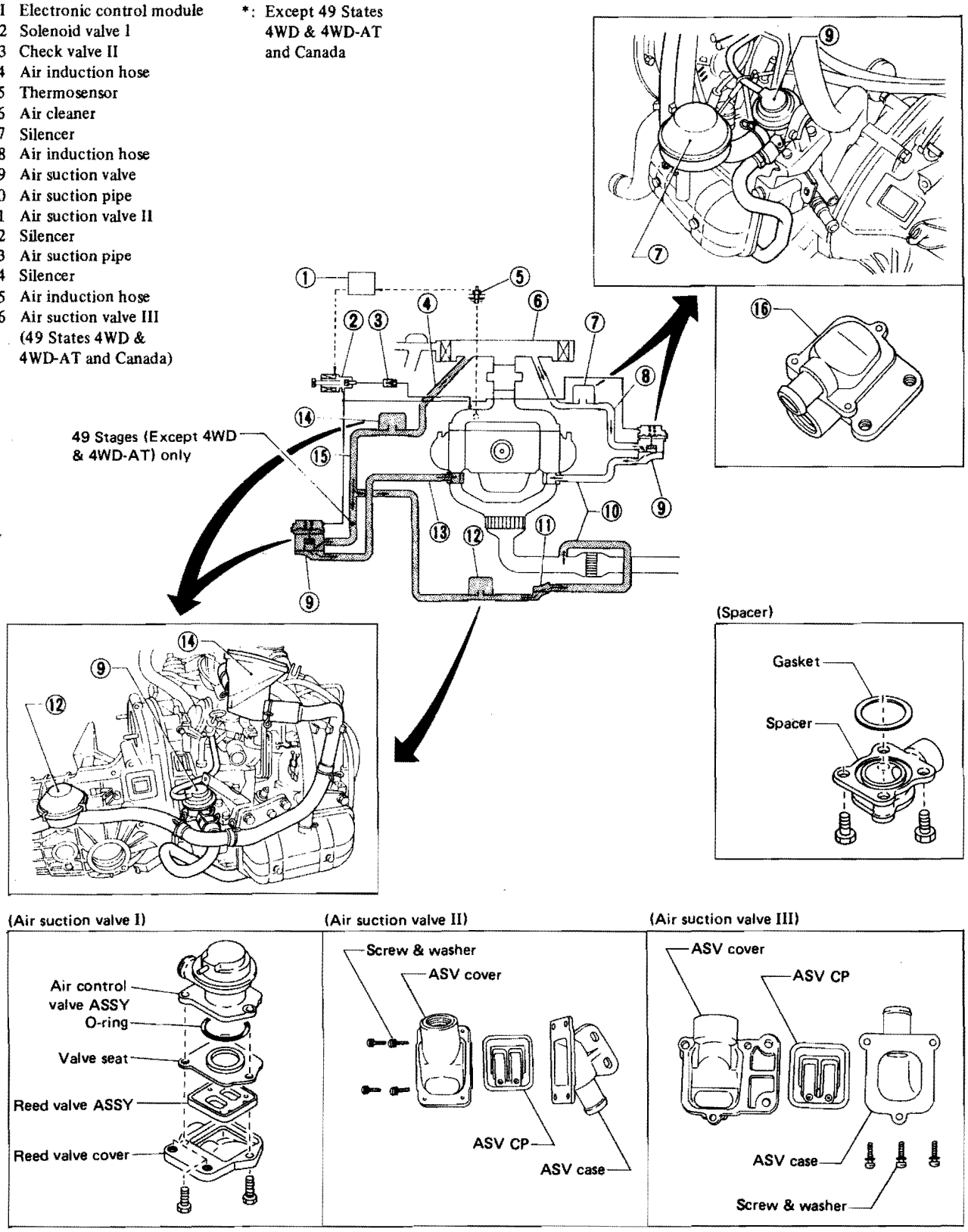

Fig. 3-16 Air injection system

A5-672

Downloaded from www.Manualslib.com manuals search engine

9. Intake Manifold

1) Hitachi Carburetor Type

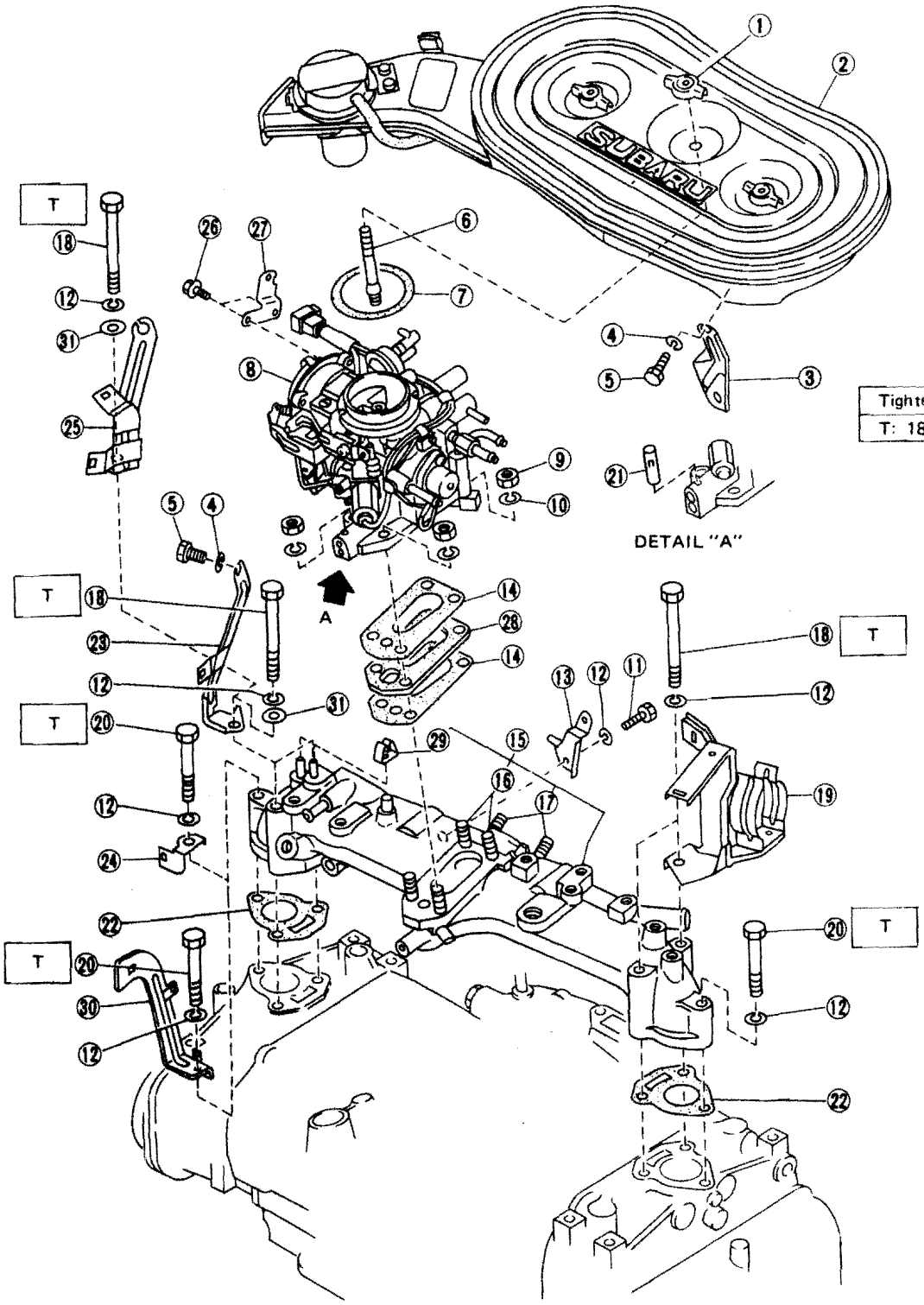

Tightening torque: N·m (kg-m, ft-lb)
T: 18 - 22 (1.8 - 2.2, 13 - 16)

1 Nut
2 Air cleaner
3 Air cleaner bracket
4 Washer
5 Bolt & washer
6 Carburetor bolt
7 Air cleaner gasket
8 Carburetor
9 Nut
10 Spring washer
11 Bolt
12 Spring washer
13 Accelerator cable bracket
14 Carburetor gasket
15 Intake manifold
16 Stud bolt
17 Stud bolt
18 Bolt
19 Fuel hose stay
20 Bolt
21 Spring pin
22 Intake manifold gasket
23 Air cleaner bracket
24 Stay 2
25 Air cleaner bracket (for power steering vehicle)
26 Screw & washer
27 Stay
28 Insulator
29 Vacuum hose clamp
30 Stay
31 Washer

A5-595

Fig. 3-17 Intake manifold (Hitachi carburetor type)

Downloaded from www.Manualslib.com manuals search engine

2) C-W Carburetor Type

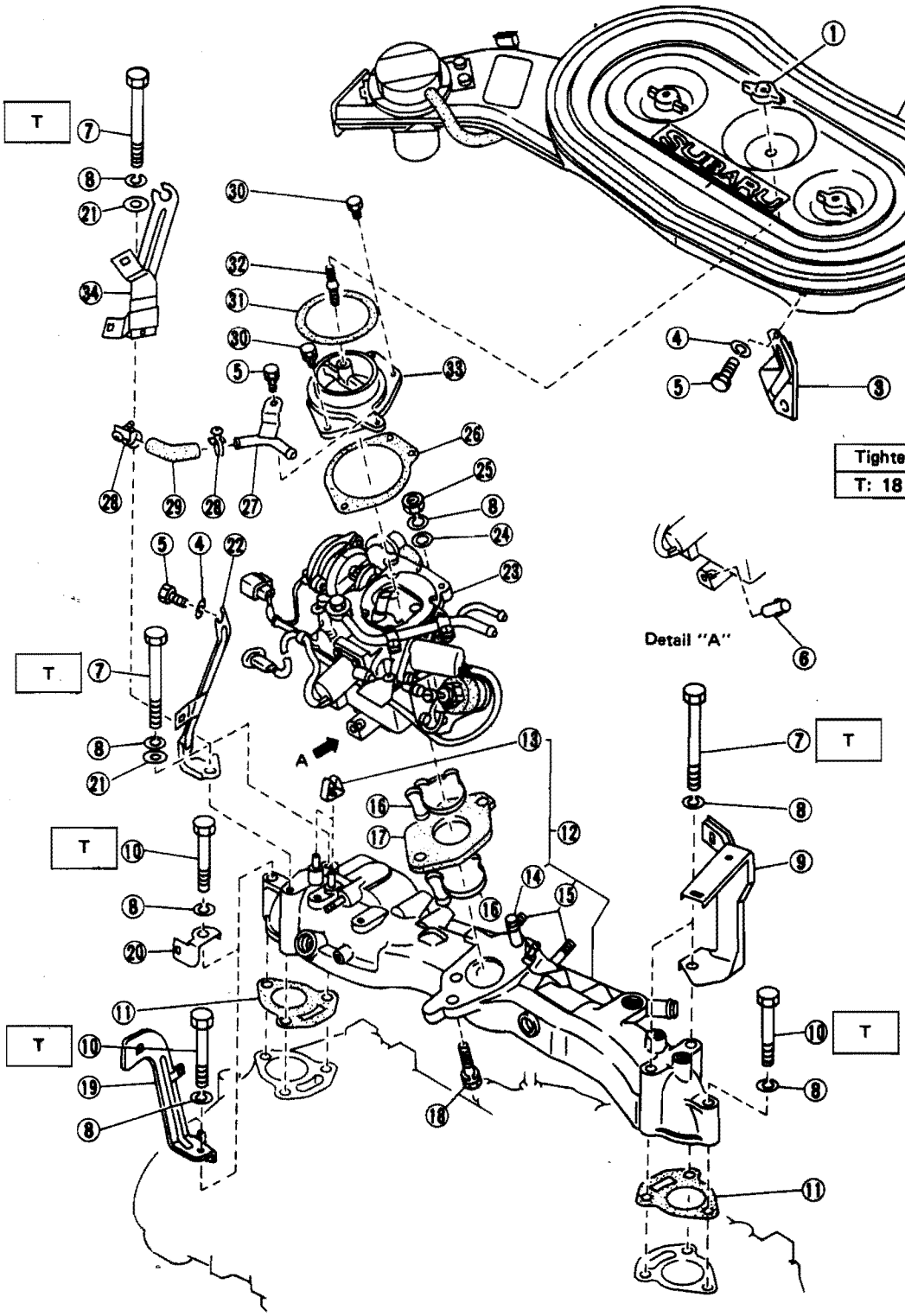

Tightening torque: N·m (kg-m, ft-lb)
T: 18 - 22 (1.8 - 2.2, 13 - 16)

1 Nut
2 Air cleaner
3 Air cleaner bracket
4 Washer
5 Bolt & washer
6 Spring pin
7 Bolt
8 Spring washer
9 Fuel hose stay
10 Bolt
11 Intake manifold gasket
12 Intake manifold
13 Vacuum hose clamp
14 Stud bolt
15 Stud bolt
16 Flange O-ring
17 Insulator
18 Bolt & washer
19 Stay
20 Stay 2
21 Washer
22 Air cleaner bracket
23 Carburetor
24 Washer
25 Nut
26 Carburetor gasket 2
27 Connector
28 Clamp
29 Hose
30 Bolt & washer
31 Air cleaner gasket
32 Carburetor bolt
33 Carburetor spacer
34 Air cleaner bracket (for power steering)

A5-596

Fig. 3-18 Intake manifold (C-W carburetor type)

Downloaded from www.Manualslib.com manuals search engine

10. Oil Pan, Oil Filler Duct and Fittings

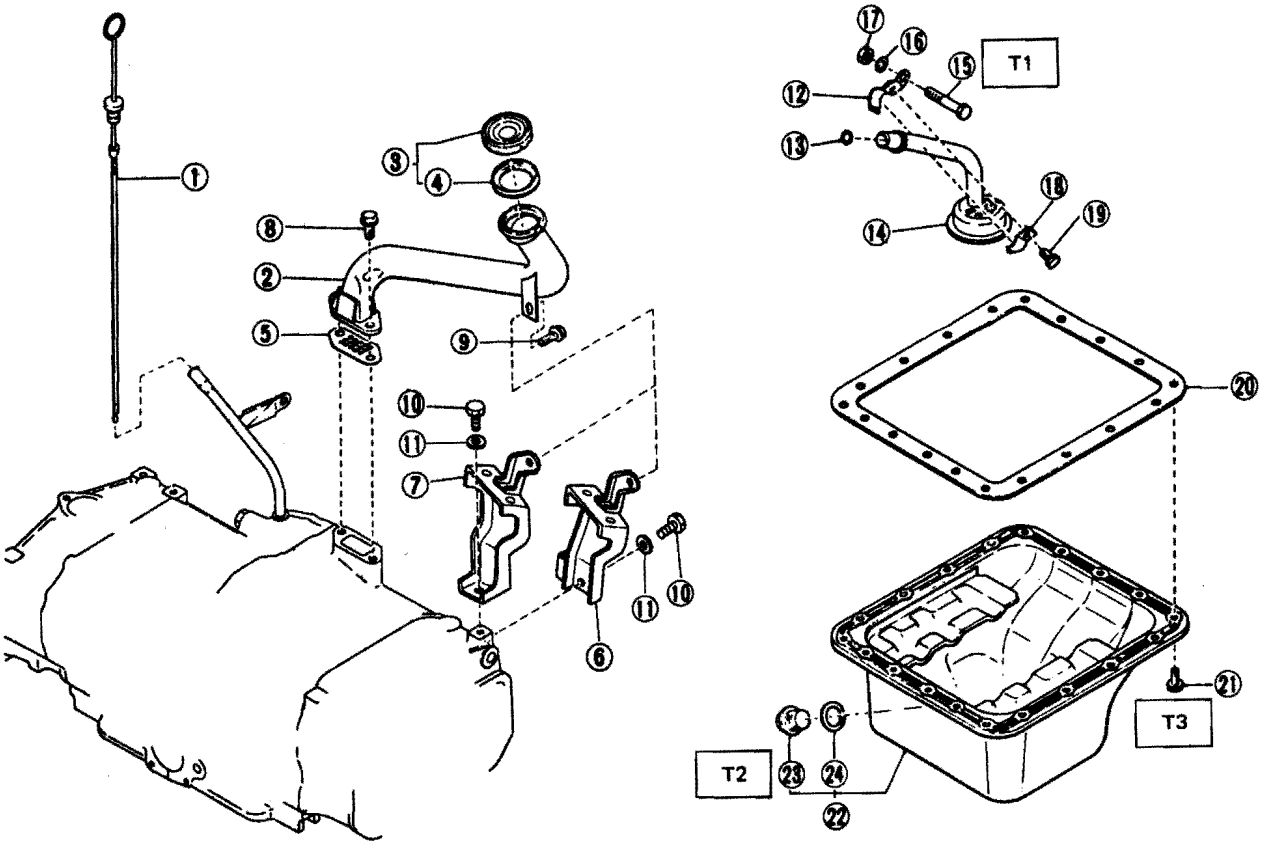

Tightening torque: N·m (kg-m, ft-lb)
T1: 23 - 26 (2.3 - 2.7, 17 - 20)
T2: 22 - 27 (2.2 - 2.8, 16 - 20)
T3: 4.4 - 5.4 (0.45 - 0.55, 3.3 - 4.0)

1 Oil level gauge
2 Oil filter duct
3 Oil filler cap CP
4 Gasket
5 Air breather duct gasket
6 Oil filler duct stay (SUBARU 1800)
7 Oil filler duct stay (SUBARU 1600)
8 Bolt and washer
9 Bolt and washer
10 Bolt
11 Spring washer
12 Oil strainer stay
13 O-ring
14 Oil strainer
15 Bolt
16 Spring washer
17 Nut
18 Oil strainer stay 2
19 Bolt & washer
20 Oil pan gasket
21 Bolt & washer
22 Oil pan CP
23 Plug
24 Gasket

Fig. 3-19 Oil pan, oil filler duct and fittings

A5-675

Downloaded from www.Manualslib.com manuals search engine

11. Oil Pump

(1800 cc engine)

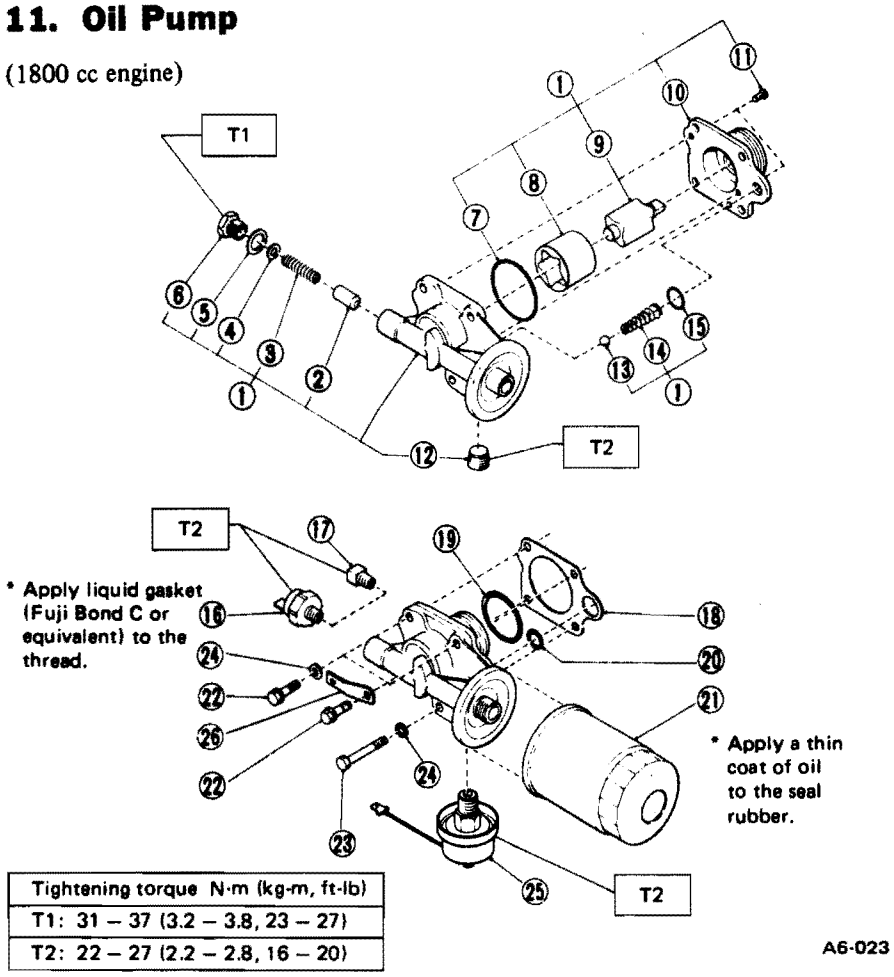

Tightening torque N·m (kg-m, ft-lb)
T1: 31 – 37 (3.2 – 3.8, 23 – 27)
T2: 22 – 27 (2.2 – 2.8, 16 – 20)

A6-023

1 Oil pump assembly
2 Oil relief valve
3 Relief valve spring
4 Washer
5 Washer
6 Plug
7 O-ring
8 Oil pump rotor
9 Oil pump drive gear
10 Oil pump body holder
11 Pan head screw
12 Plug (Models without pressure gauge)
13 Ball
14 By-pass valve spring
15 O-ring
16 Oil pressure switch (Models without pressure gauge)
17 Plug (1/8") (Models with pressure gauge)
18 Oil pump body gasket
19 O-ring
20 O-ring
21 Oil filter
22 Bolt
23 Bolt
24 Washer
25 Oil pressure gauge (Models with pressure gauge)
26 Stay

(1600 cc engine)

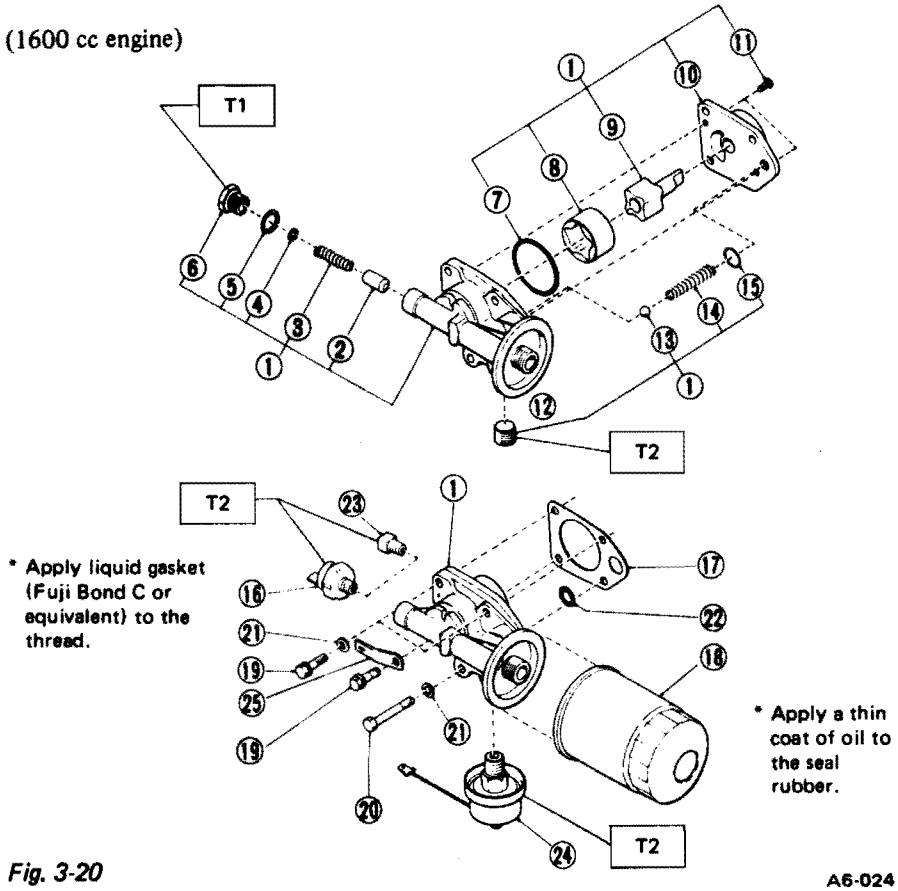

Tightening torque N·m (kg-m, ft-lb)
T1: 31 – 37 (3.2 – 3.8, 23 – 27)
T2: 22 – 27 (2.2 – 2.8, 16 – 20)

1 Oil pump assembly
2 Oil relief valve
3 Relief valve spring
4 Washer
5 Washer
6 Plug
7 O-ring
8 Oil pump rotor
9 Oil pump drive gear
10 Oil pump body holder
11 Pan head screw
12 Plug (Models without pressure gauge)
13 Ball
14 By-pass valve spring
15 O-ring
16 Oil pressure switch (Models without pressure gauge)
17 Oil pump body gasket
18 Oil filter
19 Bolt
20 Bolt
21 Washer
22 O-ring
23 Plug (Models with pressure gauge)
24 Oil pressure gauge (Models with pressure gauge)
25 Stay

Fig. 3-20

A6-024

Downloaded from www.Manualslib.com manuals search engine

12. Radiator Assembly and Electric Fan

NOTE:
There are two manufacturers in fan ASSY. One is Hitachi and another is Mitsuba. Each is exclusively composed, so there is no interchangeability between two manufacturers.

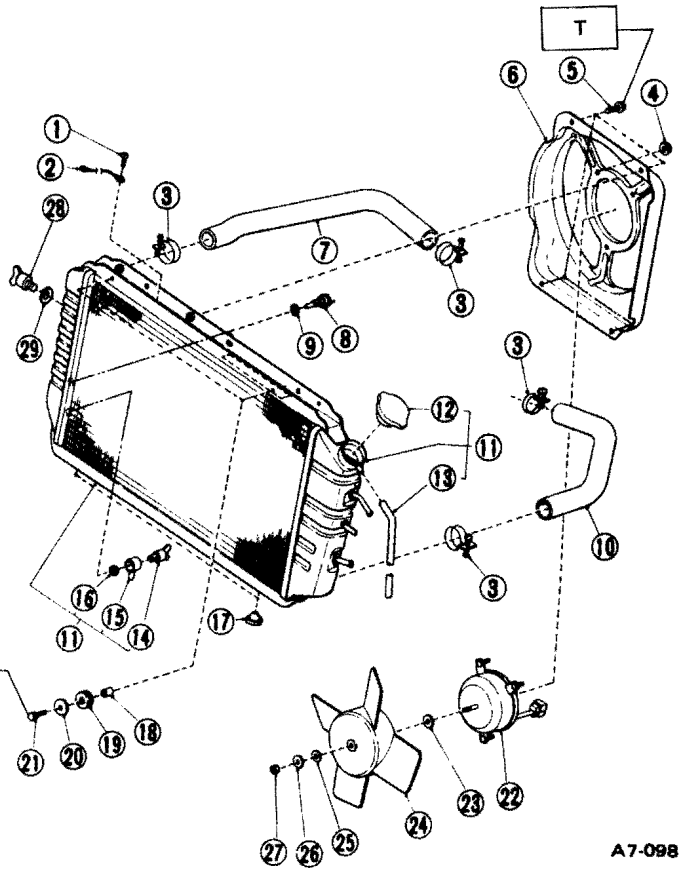

1 Ground cord
2 Tapping screw
3 Hose clamp
4 Flange nut
5 Flange bolt
6 Shroud
7 Radiator inlet hose
8 Thermo switch
9 Packing
10 Radiator outlet hose
11 Radiator assembly
12 Radiator cap
13 Overflow tube
14 Drain plug
15 Water drain
16 Packing
17 Cushion
18 Spacer
19 Grommet
20 Washer
21 Bolt & washer
22 Motor
23 Washer
24 Fan
25 Fan washer
26 Washer
27 Nut
28 Plug (AT only)
29 Gasket

Tightening torque N·m (kg-m, ft-lb)
T: 10 – 18 (1.0 – 1.8, 7 – 13)

Fig. 3-21 Engine cooling system (Radiator ASSY and electric fan)

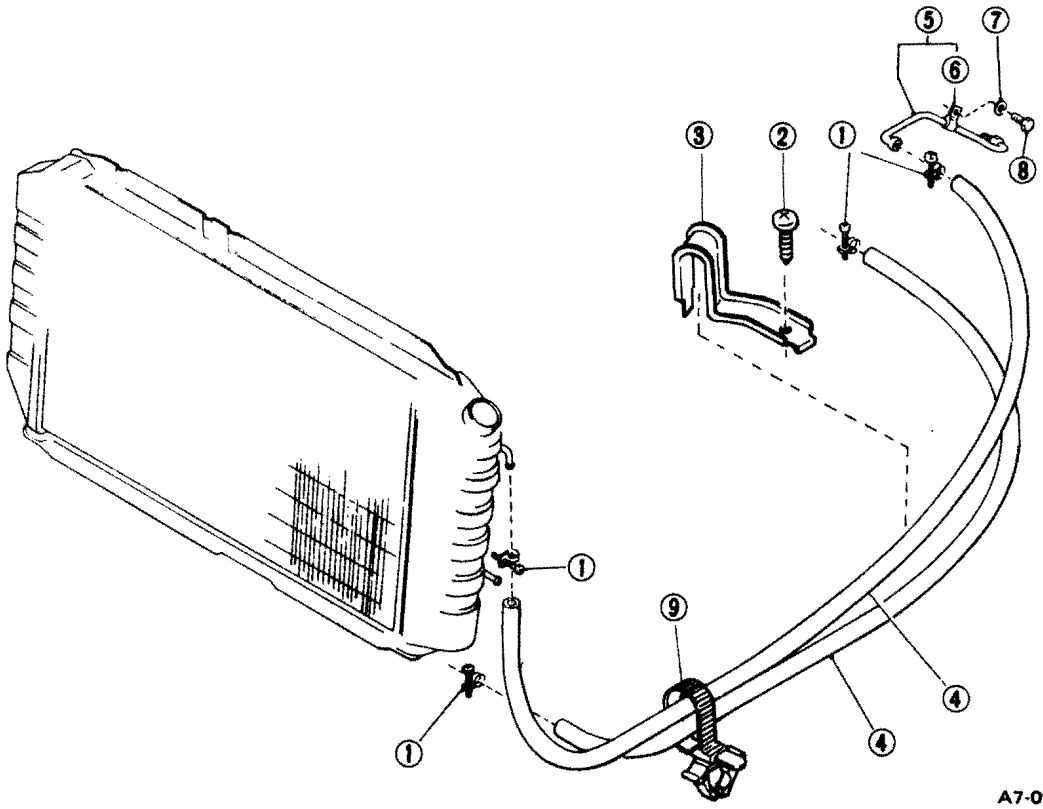

1 Hose clamp
2 Tapping screw
3 Oil cooler pipe clamp
4 Oil cooler hose
5 Oil cooler pipe complete
6 Oil cooler pipe clamp
7 Spring washer
8 Bolt
9 Clip

Fig. 3-22 Engine cooling system [Oil cooler (AT)]

Downloaded from www.Manualslib.com manuals search engine

13. Water Pump and Relative Fittings

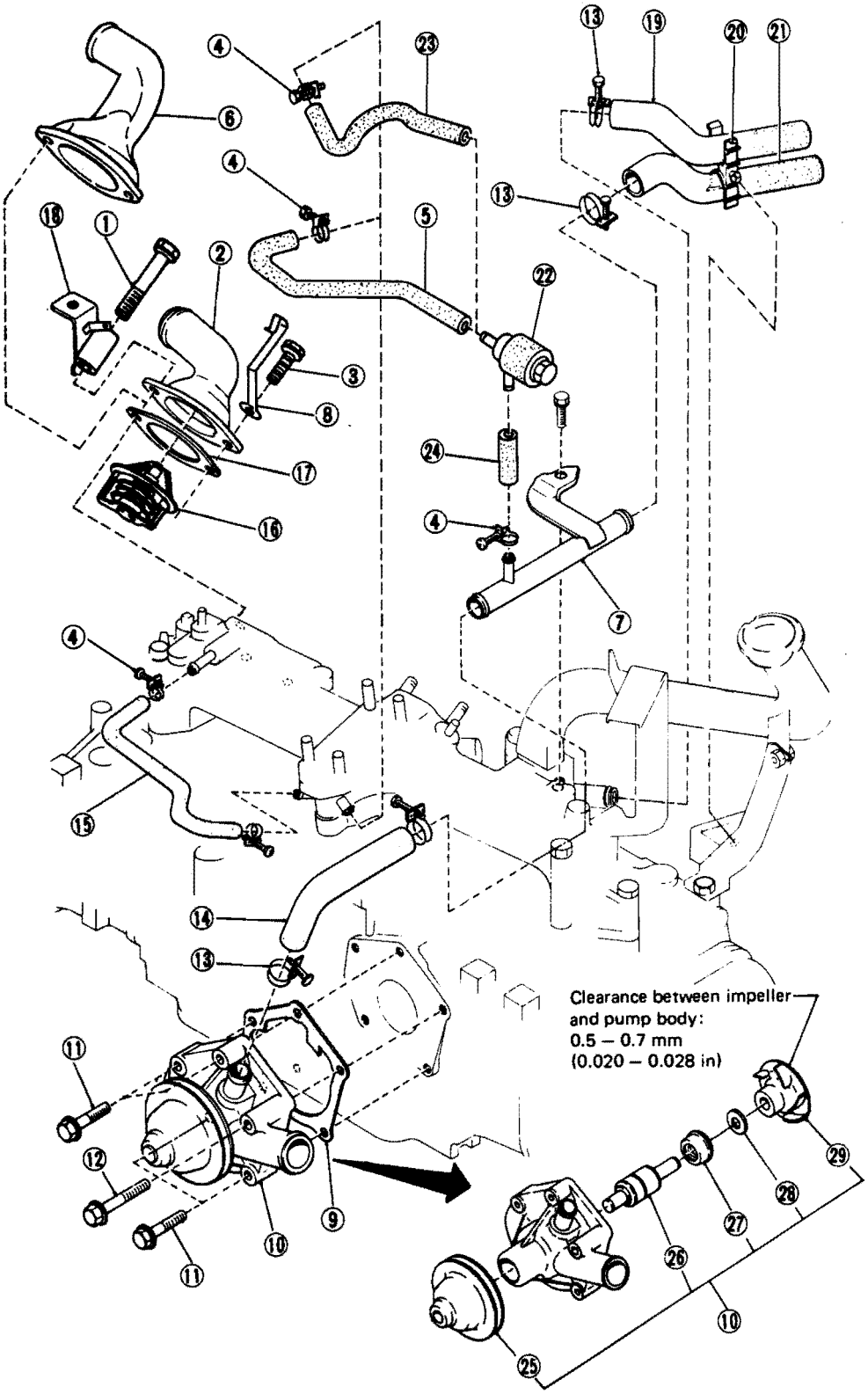

1 Bolt & washer
2 Thermostat cover
3 Bolt & washer
4 Hose clamp
5 Hose (For C-W carburetor)
6 Thermostat cover (For power steering)
7 Water by-pass pipe
8 Protector stay
9 Water pump gasket
10 Water pump
11 Bolt & washer
12 Bolt & washer
13 Hose calmp
14 Hose
15 Hose
16 Thermostat
17 Thermostat cover gasket
18 Solenoid valve bracket
19 Hose
20 Heater hose clamp
21 Hose
22 Thermo valve
23 Hose (For Hitachi carburetor)
24 Hose
25 Water pump pulley
26 Water pump shaft
27 Water pump mechanical seal
28 Water pump plate CP
29 Water pump impeller

Fig. 3-23 Engine cooling system (Water pump and relative fittings)

A5-676

Downloaded from www.Manualslib.com manuals search engine

14. Exhaust System

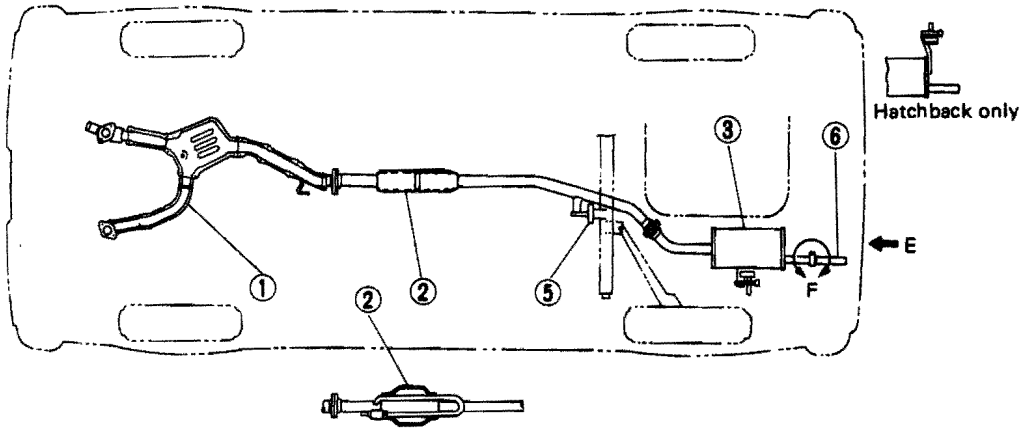

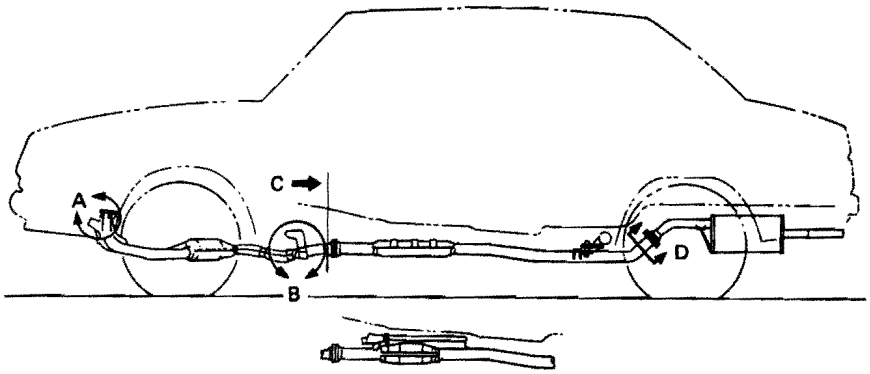

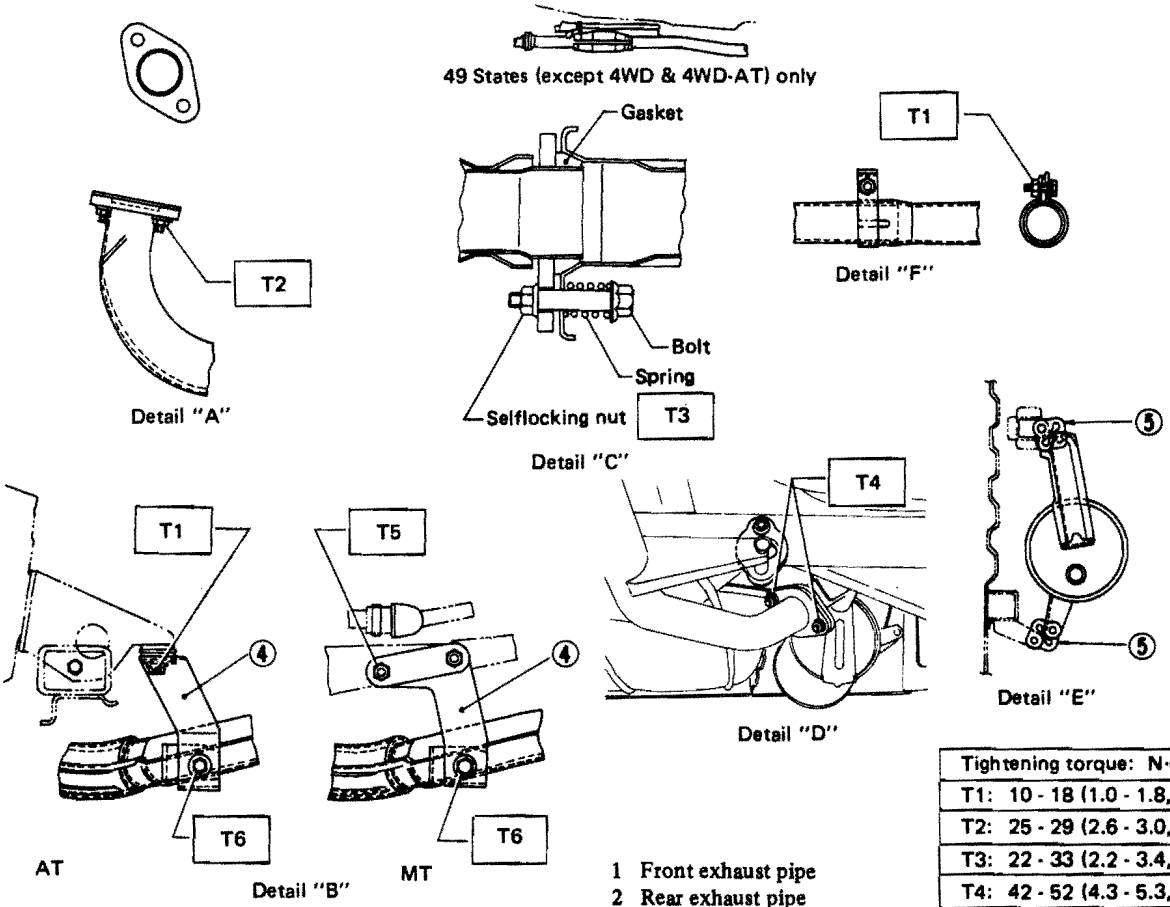

Tightening torque: N·m (kg-m, ft-lb)
T1: 10 - 18 (1.0 - 1.8, 7 - 13)
T2: 25 - 29 (2.6 - 3.0, 19 - 22)
T3: 22 - 33 (2.2 - 3.4, 16 - 25)
T4: 42 - 52 (4.3 - 5.3, 31 - 38)
T5: 14 - 22 (1.4 - 2.2, 10 - 16)
T6: 25 - 34 (2.5 - 3.5, 18 - 25)

1 Front exhaust pipe
2 Rear exhaust pipe
3 Muffler
4 Bracket
5 Cushion
6 Tail pipe cutter

Fig. 3-24

A5-677

Downloaded from www.Manualslib.com manuals search engine

3-3. On-car Services

Also after reassembling and remounting the engine, perform the following checks and adjustments.
For other checks and adjustments, refer to Chapter 2.

NOTE:

a. Upon completion of the engine adjustments, check the oil and coolant level. Add up the oil and coolant if necessary.
b. Check to see if there is any leakage of the engine oil or coolant.
c. Check the wiring cords, pipes, hoses, etc. for undesirable interference.
d. If one or both of the cylinder heads are removed in engine disassembly, never fail to perform the retightening of the cylinder head nuts & bolts and intake manifold bolts and the adjustment of the valve clearances as instructed in 2-2 in CHAPTER 2 after the engine has been run for about 10 minutes and cooled down to ambient temperature.

1. Ignition Timing

Perform inspection and/or adjustment of ignition timing according to the following procedures.

Ignition timing		
Without vacuum advance function, and with gear in neutral position (MT) or N or P position (AT), and lights off.		
1,600 1,800	MT	*1 8 ± 2° BTDC at 700 rpm
1,800	AT & 4WD-AT	*2 8 ± 2° BTDC at 800 rpm

*1: 49 States 4WD vehicle with High Altitude Kit: 12 ± 2° BTDC at 700 rpm
*2: 49 States 4WD-AT vehicle with High Altitude Kit: 12 ± 2° BTDC at 800 rpm

1) Checking Ignition Timing

Before adjusting ignition timing, disconnect the vacuum hose of advancer from the distributor to stop the vacuum advance function of the distributor, and, while checking ignition timing, plug the end of the vacuum hose with small rod as shown in the figure.

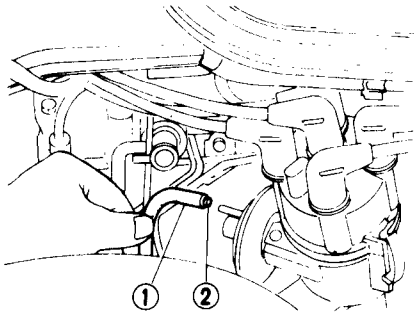

1 Vacuum hose
2 Rod
A5-507

Fig. 3-25 Plugging vacuum hose

To check the ignition timing, connect a timing light to #1 cylinder spark plug cord, adjust the engine idle speed to the specification and illuminate the timing marks on the flywheel with the timing light.

If the timing is not correct, proceed to the next paragraph for adjustment.

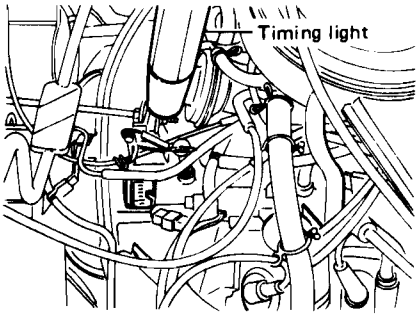

A5-377

Fig. 3-26 Checking ignition timing

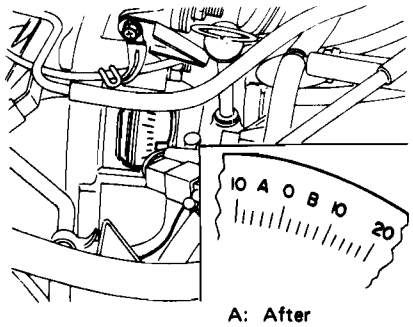

A: After
B: Before
A5-378

Fig. 3-27 Timing mark and pointer

2) Adjusting Ignition Timing

1) Loosen the 6 mm bolt on the mounting plate of the distributor.
2) Turn the distributor housing. The timing is advanced when the distributor housing is turned clockwise and is retarded when turned counterclockwise.
3) Tighten the bolt and make sure that the timing is correct.

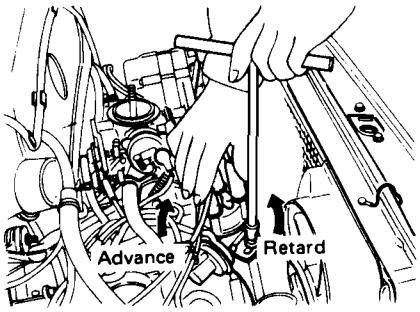

A5-379

Fig. 3-28 Adjusting ignition timing

2. Engine Compression

1) After warming up the engine, turn off the ignition-starter switch.
2) Make sure that the battery is fully charged.
3) Remove all the spark plugs.
4) Fully open the throttle valve.
5) Check the starter motor for satisfactory performance and operation.
6) Crank the engine by means of the starter motor, and read the maximum value on the gauge when the pointer is steady.

NOTE:
Hold the compression gauge tight against the spark plug hole.

7) Perform at least two measurements per cylinder, and make sure that the values are correct.

Downloaded from www.Manualslib.com manuals search engine

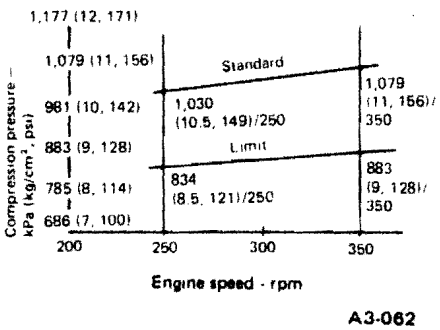

Fig. 3-29 Compression pressure

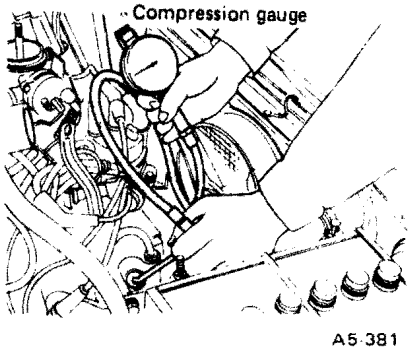

Fig. 3-30 Measuring compression

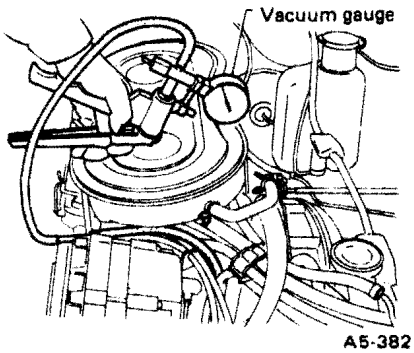

Fig. 3-31 Measuring vacuum

Difference between cylinders	196 kPa (2.0 kg/cm², 28 psi) or less

3. Intake Manifold Vacuum

1) Warm up the engine.

2) Disconnect the vacuum hose (air cleaner to intake manifold) and install the vacuum gauge to the hose fitting on the manifold as shown in figure.

3) Keep the engine at the idle speed and read the vacuum gauge indication.

By observing the gauge needle movement, the internal condition of the engine can be diagnosed as described in Table below.

Diagnosis of engine condition by measurement of manifold vacuum	
Vacuum gauge indication	Possible engine condition
1. Needle is steady but lower than normal position. This tendency becomes more evident as engine temperature rises.	Leakage around intake manifold gasket or carburetor gasket.
2. When engine speed is reduced slowly from higher speed, needle stops temporarily when it is lowering or becomes steady above normal position.	Back pressure too high, or exhaust muffler clogged.
3. Needle intermittently drops to position lower than normal position.	Leakage around cylinder.
4. Needle is steady but slightly lower than normal position.	Retarded ignition timing or insufficient valve clearances.
5. Needle is steady but slightly higher than normal position.	Advanced ignition timing.
6. Needle drops slightly and intermittently from normal position.	Leaking valves or irregular valve clearances.
7. Needle drops suddenly and intermittently from normal position.	Sticky valves.
8. When engine speed is gradually increased, needle begins to vibrate rapidly at certain speed, and then vibration increases as engine speed increases.	Weak or broken valve springs.
9. Needle vibrates above and below normal position in narrow range.	Defective ignition system or incorrect carburetor idle adjustment.

Downloaded from www.Manualslib.com manuals search engine

4. Hot Air Control System

Inspect the hot air control system periodically as follows.

In warm weather, it is difficult to find out malfunction of the hot air control system. In cold weather, however, malfunction of the air control valve due to disconnection or deterioration of the vacuum hose between the intake manifold and vacuum motor and insufficient durability of the air control valve will cause insufficient automatic control operation for intake air, and result in engine disorders:

1) Stall or hesitation of engine operation,
2) Increase in fuel consumption, and
3) Lack of power.

These phenomena reveal malfunction of hot air control system. If these phenomena should occur, check the hot air control system for the following items before carrying out inspection of the carburetor.

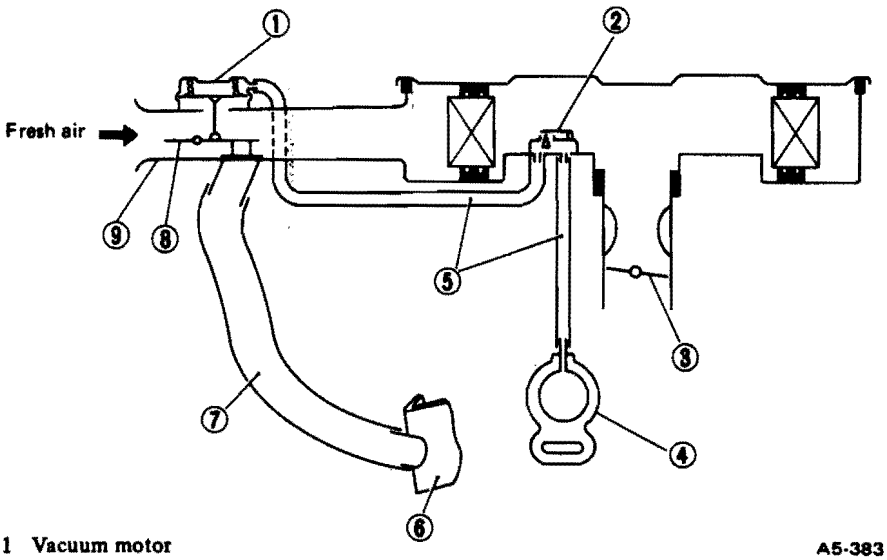

1 Vacuum motor
2 Temperature sensor
3 Throttle valve
4 Intake manifold
5 Vacuum hose
6 Air stove
7 Air intake hose
8 Air control valve
9 Air horn (Snorkel tube)

A5-383

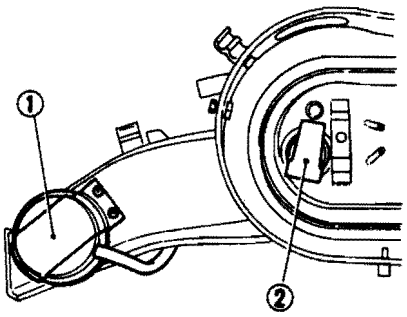

1 Vacuum motor
2 Temperature sensor

A5-508

Fig. 3-32 Hot air control system

1) Vacuum Hoses

Check each hose for cracks and proper connections.

2) Vacuum Motor

1) With the engine stopped, place a mirror at the end of the air cleaner inlet pipe as shown in the figure, and check to see if the air control valve is in correct position.

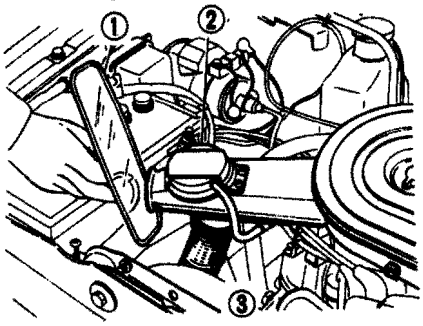

1 Mirror
2 Vacuum motor
3 Air intake hose

A5-385

Fig. 3-33 Inspecting valve position

The air control valve is in correct position if its under hood air inlet is open and hot air inlet is closed. Check the condition of the air control valve linkage.

2) Disconnect the vacuum motor inlet vacuum hose, and connect another hose to the inlet to apply vacuum to the vacuum motor. Vacuum can be applied by sucking at the hose end as shown in the figure.

Place a mirror at the end of the air cleaner inlet pipe, and check to see if the air control valve is in correct position.

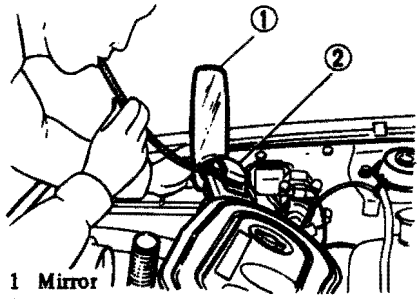

1 Mirror
2 Vacuum motor

A5-386

Fig. 3-34 Inspecting valve position

Correct position of the air control valve is the reverse of that described in 1) above. The air control valve is in correct position if the under hood air inlet is closed, and the hot air inlet is open.

Downloaded from www.Manualslib.com manuals search engine

3) With the hot air inlet in open position, as described in 2), pinch the vacuum hose with fingers so that the air does not enter the vacuum motor. In this condition, check that the air control valve maintains the condition described in 2) for more than 30 seconds, and that the hot air inlet is open. If the diaphragm spring actuates the air control valve by its spring force to open the under hood air inlet within 30 seconds, replace the vacuum motor as an assembly since this may have resulted from air leak at the vacuum motor diaphragm.

3) Temperature Sensor

Check temperature sensor for proper function by proceeding as follows. Be sure to keep the engine cold before starting this test.

1) With the engine stopped, check the position of the air control valve. In this case, underhood air inlet should be open. Use a mirror for inspection as 2) – 1).

2) Start the engine and keep it idling. Immediately after engine starting, check the air control valve for correct position as described above. In this case, the correct position of the air control valve is the reverse of 2)–1); the under hood air inlet is closed, and the hot air inlet is open.

3) Check that the air control valve gradually moves to open the under hood air inlet as the engine warms up. When the environmental temperature around the temperature sensor is low, spend more time for engine warming up operation to facilitate smooth operation of the air control valve.

4) Rubber Plate

Check the rubber plate for stickiness.

5) Air Intake Hose

Check the air intake hose for damage and its connections for leaks.

Operation of air control valve and sensor valve			
Under hood air temperature	Vacuum on vacuum motor diaphragm	Air control valve operation	Sensor valve operation
Below 38°C (100°F)	Below 5.3 kPa (40 mmHg, 1.57 inHg)	Cool air admission	Close
	Above 16.0 kPa (120 mmHg, 4.72 inHg)	Hot air admission	
38 – 53°C (100 – 127°F)	————	Cool and hot air mixture admission	Open
Above 53°C (127°F)	————	Cool air admission	Open

5. Engine Idle Speed and Idle Mixture

1) Engine Idle Speed

Refer to 2-2, 8. Engine Idle Speed in Chapter 2.

2) Engine Idle Mixture

NOTE:

Perform the idle mixture adjustment only when dismounting carburetor from engine or disassembling carburetor. And after completion of adjustment, be sure to press spring pin into the hole in throttle chamber.

Downloaded from www.Manualslib.com manuals search engine

1) For 49 States (except 4WD & 4WD-AT) and California

Perform the engine idle mixture adjustment according to the following diagram.

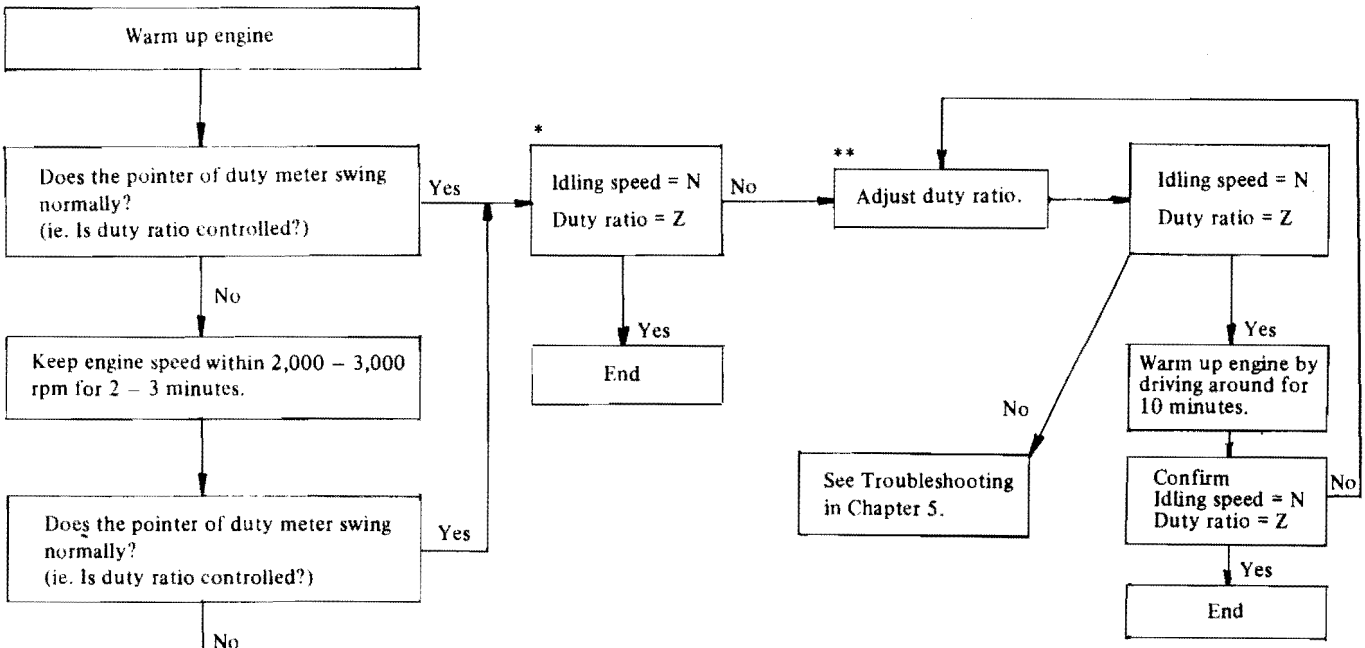

* N = { 700 ± 100 rpm (MT) / 800 ± 100 rpm (AT) }

Z =

		Vehicle with HITACHI carburetor	Vehicle with C-W carburetor
Standard value		Duty ratio = Z 55% (49.5 deg) 35% (31.5 deg) 50 m (164 ft) 1,600 m (5,250 ft) (Z is determined according to the altitude.)	Z = 35% (31.5 deg) (Z is constant regardless of the altitude.)
Allowance	At adjusting	±5% (±4.5 deg)	
	At checking	±20% (±18 deg)	

** Adjust idle adjusting screw so that duty meter indicates 35 ± 10%.

NOTE:

a. Perform the above adjustment on both main and slow duty solenoid valve by using check terminal.

b. Adjustment method by using dwell meter is as follows.

(1) Set the range switch to 'four cycle – four cylinder'.

(2) Adjust the idle adjusting screw so that the needle points out according to the following calculation.

$$\text{Dwell (deg)} = \frac{90}{100} \times \text{Duty (\%)}$$

Downloaded from www.Manualslib.com manuals search engine

2) For 49 States 4WD & 4WD-AT, and Canada

Adjust engine idle mixture as follows:
1) Start engine and warm up sufficiently.
2) Inspect idle speed and CO percentage in exhaust gas with secondary air.

		Other than AT	AT & 4WD-AT
Idle speed (rpm)		700±100	800±100
CO percentage (%)	Without secondary air	2.0±1.0	1.5±1.0
	With secondary air	0 – 0.5	

3) Disconnect air suction hose between air suction valve and secondary air cleaner.
4) Clog air suction pipe with rubber cap or the like.
5) Inspect idle speed and CO percentage in exhaust gas without secondary air.
6) If necessary, adjust idle speed and CO percentage in exhaust gas while clogging air suction pipe.
a. Adjust both throttle adjusting screw and idle mixture adjusting screw to obtain the specified idle speed and CO percentage without secondary air.
b. Remove the plug clogging air suction pipe, and connect the pipe to secondary air cleaner hose.
c. With secondary air, recheck that idle speed and CO percentage satisfy the specifications.

6. Radiator

Check radiator, hoses and their connections for damage, clogging or leakage.

A. Testing of radiator cap

Check the valve, spring and packing in the cap for damage.
Check rubber seal on cap for tears, cracks or deterioration after cleaning it.
Install the cap on a tester and if cap does not hold or does not release the specified pressure, replace cap.

Standard pressure at which valve starts to open	88 kPa (0.9 kg/cm², 13 psi)

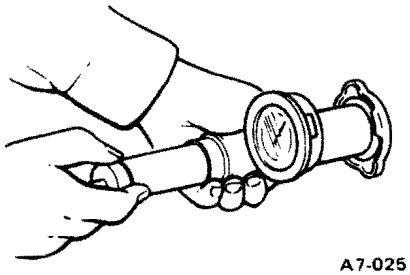

Fig. 3-35 Testing the cap

B. Testing of radiator leakage

Inspect radiator for leakage using a cap tester and applying a pressure of 157 kPa (1.6 kg/cm², 23 psi).
If a leakage is detected, repair or replace the radiator.

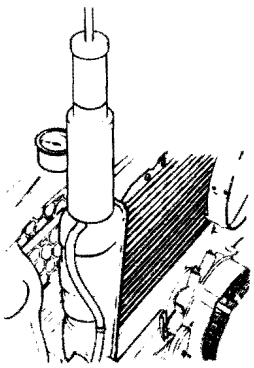

Fig. 3-36 Testing the radiator

7. Hydraulic Valve Lifter

A. Replacement

The hydraulic valve lifter can be replaced even when the engine is mounted on the vehicle as follows:
1) Disconnect both the blow-by and PCV hoses.
2) Remove the valve rocker cover.
3) Using the special tool (Socket Wrench: 899988607), loosen the valve rocker ASSY and remove the push rod.
4) Raise the vehicle body with a jack and support it on a safety stand.
5) Remove the nuts which secure the front engine mounting and slightly raise the engine using a floor crane.
6) Remove the drain plug to drain the engine oil completely. Detach the oil pan.
7) Remove the hydraulic valve lifter. Use of a magnet facilitates removal.

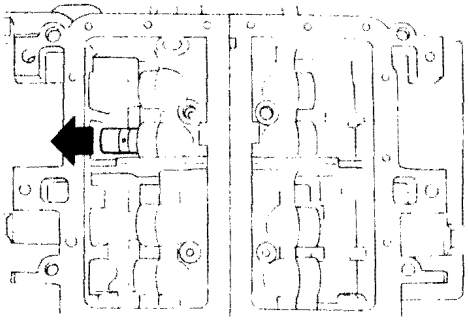

Fig. 3-37

8) The valve lifter can be installed in the reverse order.

B. Adjustment

1) Perform adjustment in cold condition [coolant temperature: 20 to 40°C (68 to 104°F)].
2) Retighten cylinder head nuts and bolts previously if necessary.
3) Adjust hydraulic valve lifter with the following procedures:
a. Perform adjustment in two (2) sequences.
Sequence (I) ————
Position #1 cylinder at TDC (compression), and adjust the valve lifters for intake and exhaust valves on #1 cylinder, for exhaust valve on #3 cylinder and for intake valve on #4 cylinder.

Downloaded from www.Manualslib.com manuals search engine

Sequence (II) ————
Position #2 cylinder at TDC (compression), and adjust all the others, i.e. for intake and exhaust valves on #2 cylinder, for intake valve on #3 cylinder and for exhaust valve on #4 cylinder.

b. Raise up the bend of lock washer, loosen the lock nut, and then turn the valve rocker screw clockwise by approx. four (4) turns using Valve Clearance Adjuster 498767000.

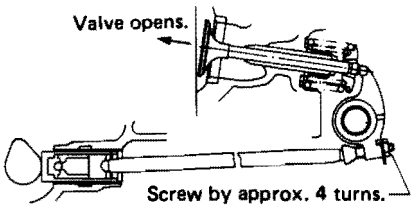

A5-700

c. Leave it with the valves opened for approx. 15 minutes.

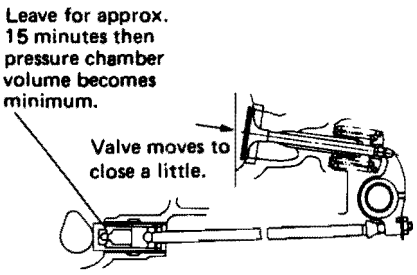

A5-701

d. Unscrew the valve rocker screw gradually. Then, the rocker arm stops moving due to the closing of valve. This condition is called "Zero Point".

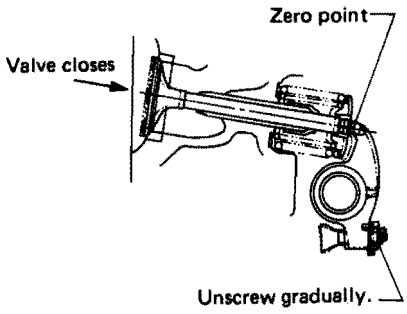

A5-702

e. Moreover, unscrew the valve rocker screw counterclockwise by 1.5 turns.

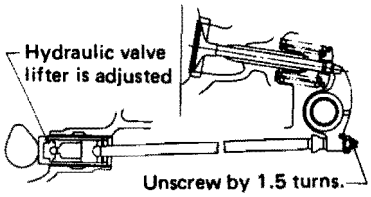

A5-703

f. Tighten the lock nut, and bend the lock washer.

8. Exhaust System

1) After installing the exhaust system, check all clearances to ensure that they exceed the specified values.
2) If a clearance is small at any particular point, loosen all connections, then readjust clearances by utilizing free play existing at each bolt location until correct clearances are obtained. Finally, tighten all connections to the specified value.

NOTE:
If muffler or exhaust pipe clearance is excessively small due to a deformed or broken exhaust cover, repair or replace the cover, and adjust the clearance correctly.

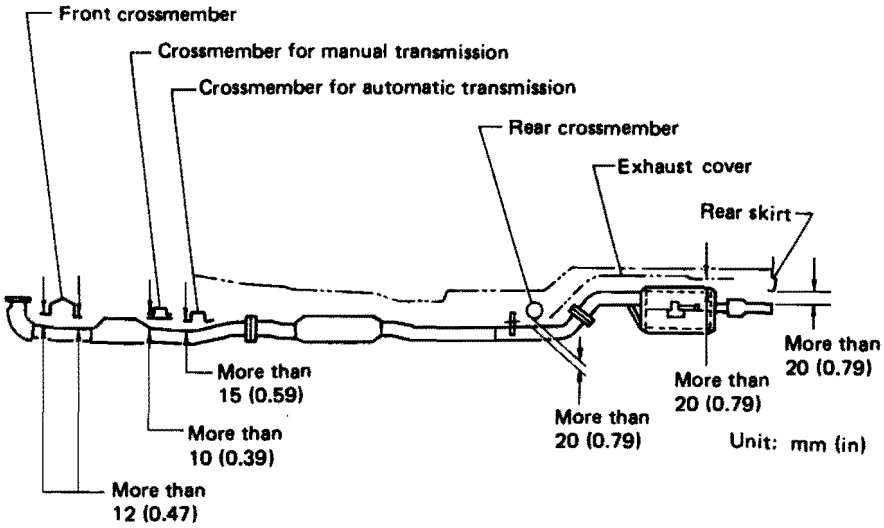

Fig. 3-38

A22-065

Downloaded from www.Manualslib.com manuals search engine

9. Oxygen (O_2) Sensor

Oxygen (O_2) sensor is installed on front exhaust pipe, and is one of the important emission control parts. Therefore, replace it as follows only when it is damaged by external force, or if it seems to be out of order according to troubleshooting etc.

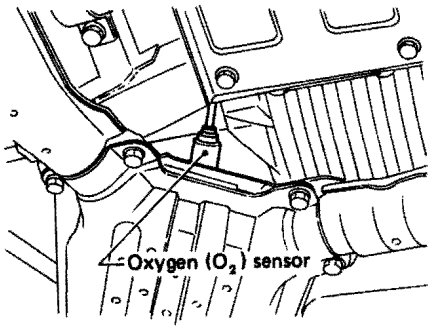

A5-679

Fig. 3-39

1) Removal

1) Disconnect O_2 sensor cord.
2) Apply SUBARU GUARD (000902821) or its equivalent to threaded portion of oxygen (O_2) sensor, and leave it for one minute or more.
3) Loosen oxygen (O_2) sensor by turning it 10 to 40 degrees with special tool (Socket: 499990100) and wrench.

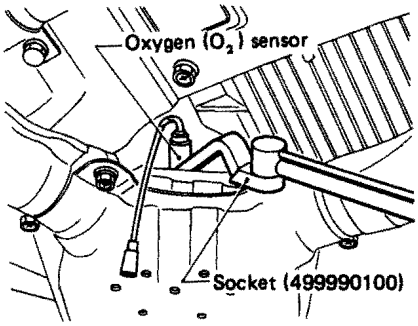

A5-680

Fig. 3-40

4) Apply SUBARU GUARD (000902821) to threaded portion of oxygen (O_2) sensor again, and leave it for one minute or more.
5) Remove oxygen (O_2) sensor by using special tool (Socket: 499990100) and wrench.

NOTE:
When removing, do not force oxygen (O_2) sensor especially when front exhaust pipe is cold; otherwise it will damage the front exhaust pipe.

2) Installation

1) Apply anti-seize compound ("SS-30" made by JET-LUBE Inc. in U.S.A. or its equivalent) only to threaded portion of oxygen (O_2) sensor to make the next removal easier.

NOTE:
Never apply anti-seize compound to protector of oxygen (O_2) sensor.

2) By using special tool (Socket: 499990100) and torque wrench, install oxygen (O_2) sensor onto front exhaust pipe by tightening it to the specified torque.

Torque [oxygen (O_2) sensor]	22 – 29 N·m (2.2 – 3.0 kg-m, 16 – 22 ft-lb)

3) Securely connect oxygen (O_2) sensor cord.

Downloaded from www.Manualslib.com manuals search engine

3-4. Dismounting and Remounting

1. Precautions

1) Perform the job at a place where a chain hoist or a floor crane is available. If possible, it is desirable to perform the job over a pit together with a chain hoist or a floor crane.
2) Be careful not to soil the vehicle interior (particularly windows and seats).
3) Be careful not to allow brake fluid and coolant to come in contact with the painted surfaces of the vehicle body. It is desirable to cover the fenders with covers during the work, if possible.

2. Dismounting

1) Open/put engine hood widely by setting its stay in the correct position.

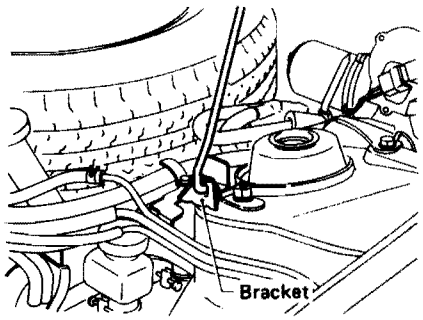

A1-063

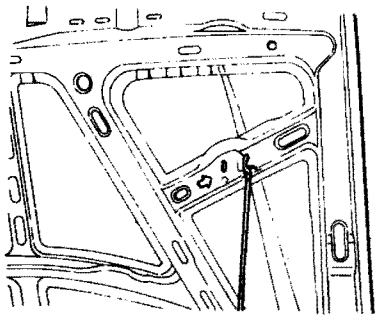

A4-161

Fig. 3-41 Opening engine hood

2) Detach spare wheel & tire and its supporter. In this process, pay attention to prevent damage of air cleaner.
3) Remove ground cable between battery and engine, and ground wiring for noise condenser from engine.
4) Disconnect hoses and electric wiring from air cleaner. Remove bolts and nuts, and take out air cleaner.

NOTE:
Plug the carburetor opening to prevent dirt or dust from entering carburetor.

5) Disconnect hoses from carburetor, intake manifold, etc.
a. Fuel delivery hose and fuel return hose from carburetor

NOTE:
Gasoline remaining in delivery hose may flow out. Therefore receive this gasoline with an appropriate container.

b. Vacuum hose, carburetor vent hose and purge hose from evapolation pipe complete
c. Vacuum hose for brake booster (Master-vac) from intake manifold
d. (AT only) Vacuum hose for kick-down solenoid from vacuum pipe
6) Disconnect electric wiring, hoses, etc.
a. Engine wiring harness
b. High tension cords
c. Alternator wiring
d. Starter wirings
e. Vacuum switch hose(s)
7) Disconnect cables, pitching stopper, etc.
a. Accelerator cable from carburetor
b. (MT only) Clutch return spring
c. (Vehicle with Hill-holder) P.H.V. (Pressure Hold Valve) cable from bracket
d. Pitching stopper
8) (AT only) Remove four bolts connecting torque converter to drive plate through timing hole.
9) Loosen bolts and nuts connecting transmission to engine, and then remove upper two bolts only.

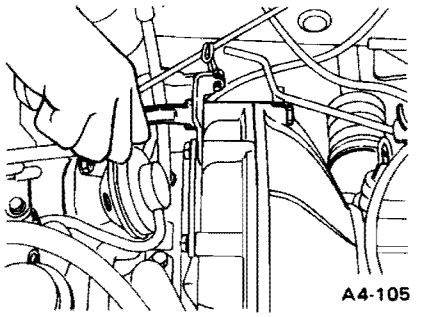

A4-105

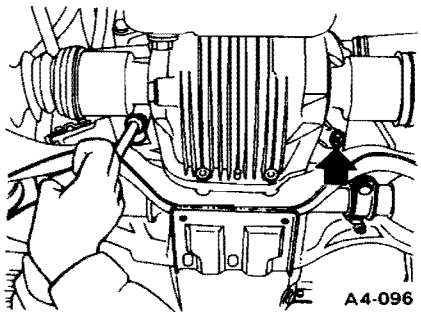

A4-096

Fig. 3-42 Removing upper bolts and loosening lower nuts

10) Take out radiator as follows:
a. Detach right-hand side under cover.
b. Connect a vinyl hose to radiator drain plug, and drain out coolant.

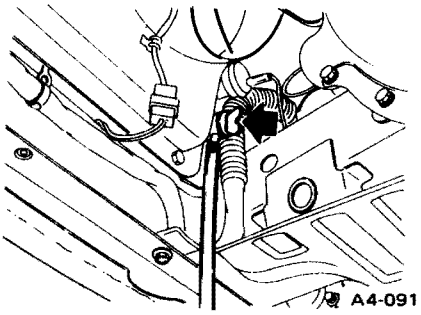

A4-091

Fig. 3-43 Draining coolant

c. Disconnect both inlet and outlet radiator hoses.

NOTE:
Use a container to catch coolant running out of inlet and outlet hoses.

d. Disconnect electric connectors for thermoswitch and fan motor, and ground wiring of radiator.
e. (AT only) Disconnect cooler hoses at radiator.
f. Remove two bolts, and take out radiator.

Downloaded from www.Manualslib.com manuals search engine

g. Disconnect both inlet and outlet heater hoses.

11) (Vehicle with power steering) Remove oil pump ASSY and bracket as follows:

a. Detach idler cap with pliers with waste cloth around it in order not to damage it.

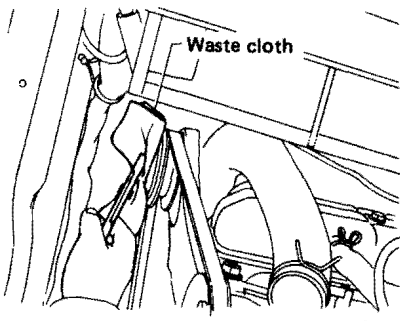

A4-194

Fig. 3-44 Removing cap

b. Loosen lock bolts and adjust bolt of idler pulley, and then detach oil pump belt.

c. Remove bolts and nut, and put oil pump ASSY on bulkhead.

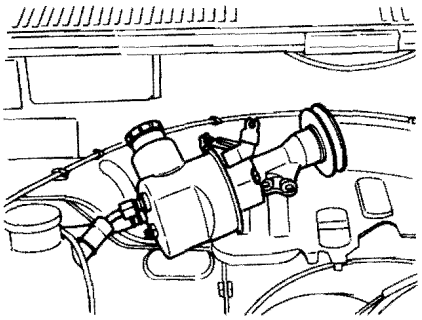

A4-196

Fig. 3-45 Removing oil pump ASSY

NOTE:

a. Be careful that the oil does not flow out.

b. Be careful that the two oil hoses does not damage.

d. Detach bracket.

12) Raise the front end of vehicle using a jack, and support with safety stands at the correct positions.

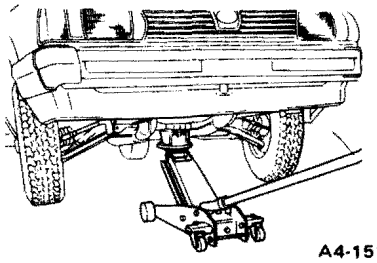

A4-151

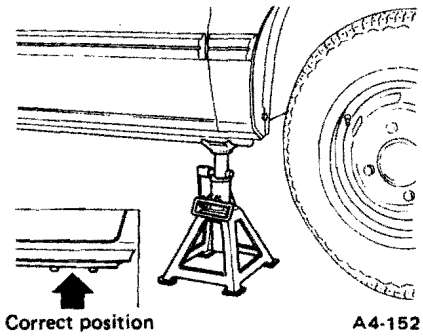

A4-152

Fig. 3-46

13) Separate front exhaust pipe from engine as follows:

a. Disconnect oxygen (O_2) sensor cord.

b. Remove nuts securing front exhaust pipe to the exhaust ports of engine.

c. Loosen bolt connecting front exhaust pipe to bracket of body.

14) Remove nuts securing cushion rubbers used to support the front portion of engine.

15) Attach a lifting wire to front and rear hangers of engine, and hang it with a crane or similar equipment. But do not lift it at this time.

NOTE:

a. Make sure that the lifting wire hook is securely attached to the hanger.

b. Take care so that a lifting wire does not damage the engine parts.

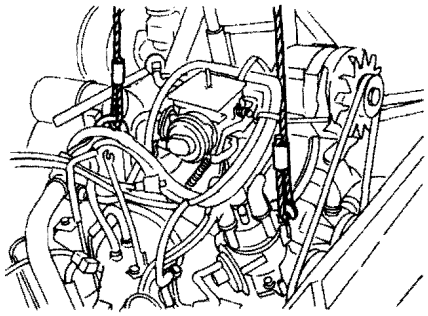

A4-199

Fig. 3-47

16) Remove lower two nuts loosened previously.

17) To facilitate dismounting engine, lower the jack.

18) Visually check again that nothing has been over-locked.

19) Carefully lift engine until bolts retaining engine mount rubber cushion clear crossmember.

20) Support transmission using another jack.

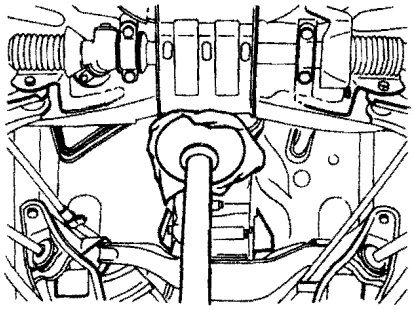

A4-097

Fig. 3-48 Supporting transmission

21) Slowly move engine forward to prevent transmission mainshaft from interfering with flywheel housing, and then take engine out of engine room.

NOTE:

Be careful not to strike engine against any adjacent parts, or car body during dismounting.

3. Remounting

1) Set (repaired or new) engine near by transmission as follows.

a. Lift engine using a crane or similar equipment.

b. Move/put it near the center of engine room.

c. Lower engine until the centerline of crankshaft aligns with mainshaft of transmission.

NOTE:

a. While engine is lowered, be careful to prevent engine from striking any adjacent parts or car body.

b. Apply grease to splines of mainshaft in advance.

2) Turn crank pulley until mainshaft is aligned with clutch disc at their splines, and secure engine to transmission as follows.

Downloaded from www.Manualslib.com manuals search engine

NOTE:
Be careful to prevent mainshaft splines from interfering with clutch diaphragm spring. This can cause damage to spring.

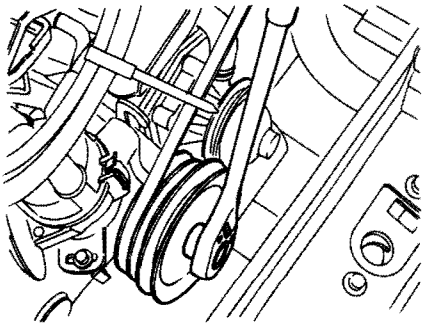

Fig. 3-49 Turning crankshaft

a. Temporarily tighten upper two bolts, and then lower nuts.
b. Make sure that engine is properly aligned with transmission.
c. Securely tighten both upper bolts and lower nuts.

Torque (Bolts and nuts)	46 – 54 N·m (4.7 – 5.5 kg-m, 34 – 40 ft-lb)

3) Put engine in position as follows.
a. Lower the jack supporting transmission, and take it out.
b. Position engine mount rubbers onto crossmember.
c. Lower engine moreover.
d. Detach lifting wire from engine, and carry away crane.
4) (AT only) Install drive plate on torque converter as follows:
a. Jack up the car until front wheels are slightly off the floor.
b. Turning crank pulley with a wrench, bring the mounting hole for drive plate to the center of the timing hole.
c. Turn front wheels until the mounting holes for torque converter are aligned with the mounting holes for drive plate, and tighten them by bolts.
d. Crank engine with a wrench and securely tighten all four mounting bolts – one bolt at a time for each turn – to retain torque converter and drive plate.

Torque	23 – 26 N·m (2.3 – 2.7 kg-m, 17 – 20 ft-lb)

NOTE:
Be careful not to drop bolts into torque converter housing.

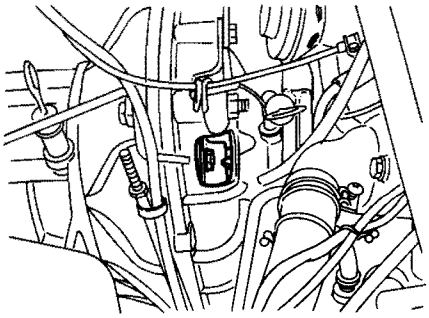

Fig. 3-50 Connecting torque converter and drive plate

5) Raise the vehicle with a jack just enough to work underneath it and support with safety stands.
6) Securely tighten engine mount cushion rubbers on the crossmember.

Torque	20 – 33 N·m (2.0 – 3.4 kg-m, 14 – 25 ft-lb)

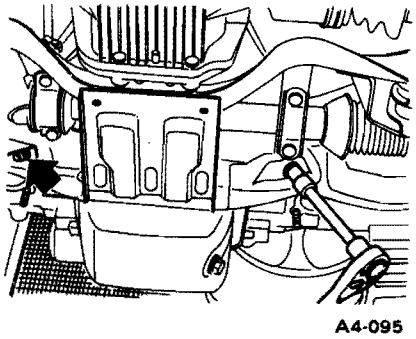

Fig. 3-51 Tightening cushion rubber nuts

7) Connect front exhaust pipe to engine as follows.
a. Attach new gaskets to the engine exhaust ports, and temporarily tighten nuts.

NOTE:
Place the flat surface of the gasket to the engine exhaust port.

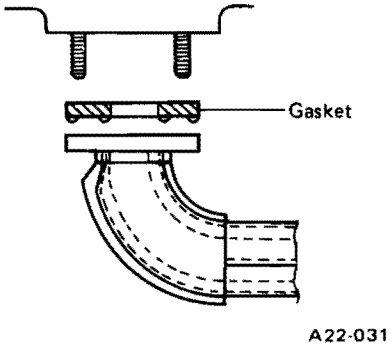

Fig. 3-52 Installing gasket

b. Tighten bolt at bracket of body.

Torque	25 – 34 N·m (2.5 – 3.5 kg-m, 18 – 25 ft-lb)

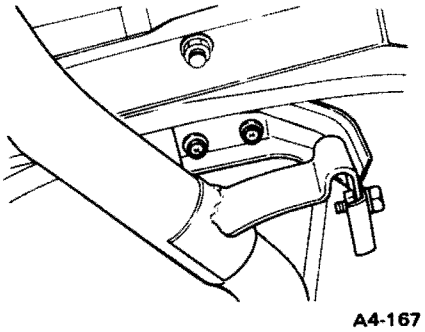

Fig. 3-53 Installing front exhaust pipe

c. Then tighten four nuts to the specified torque.

Torque	25 – 29 N·m (2.6 – 3.0 kg-m, 19 – 22 ft-lb)

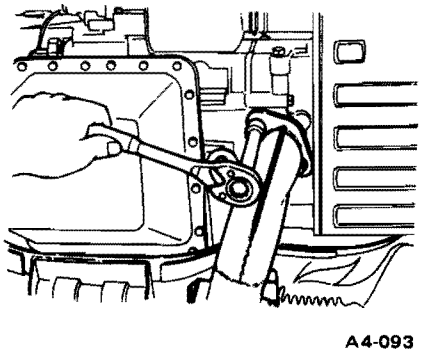

Fig. 3-54

d. Connect O_2 sensor cord.
8) Lower the vehicle to the floor.

Downloaded from www.Manualslib.com manuals search engine

9) Install pitching stopper as follows:
a. Insert pitching stopper rod into the bracket on the engine side, and tighten it at the car body side.
b. Tighten the rear nut on pitching stopper of the engine side so that the specified clearance exists between rubber cushion and washer.

Specified clearance	
MT	0.8 – 1.2 mm (0.031 – 0.047 in)
AT	1.8 – 2.2 mm (0.071 – 0.087 in)

c. Attach a wrench to the rear nut on pitching stopper of the engine side to prevent it from turning, and tighten the front nut securely.

Torque	10 – 18 N·m (1.0 – 1.8 kg-m, 7 – 13 ft-lb)

NOTE:
Always make a precise adjustment of pitching stopper to prevent engine from vibrating during operation.

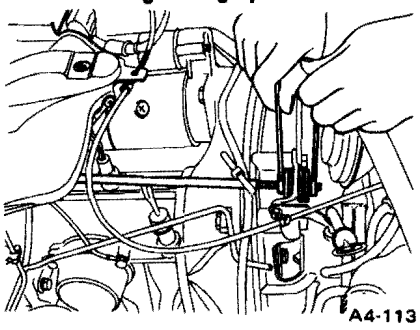

Fig. 3-55 Installing pitching stopper

10) Attach supporter of spare wheel & tire.
11) Connect cables as before.
a. Connect clutch cable to release fork with free play.

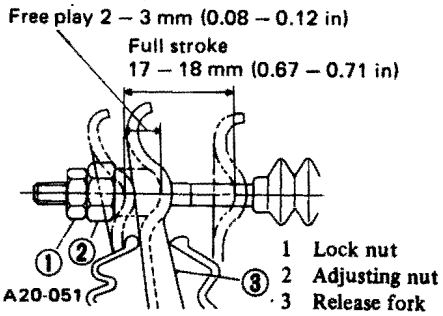

Fig. 3-56 Adjusting clutch release fork

b. (Vehicle with Hill-holder) Connect P.C.V. cable, and adjust Hill-holder system. (Refer to Chapter "Brakes".)

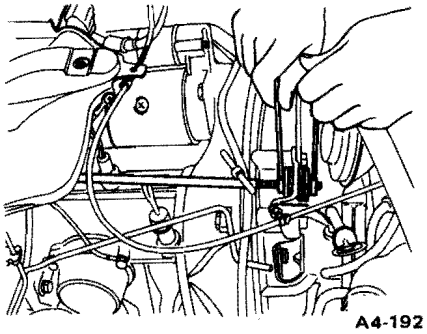

Fig. 3-57

c. Connect accelerator cable, and adjust its tension by adjusting nuts.

NOTE:
After making the accelerator cable adjustment, depress the accelerator pedal to ensure that the throttle valve fully opens.

• Hitachi carburetor

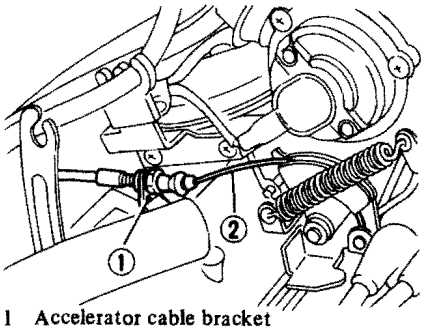

• C-W carburetor

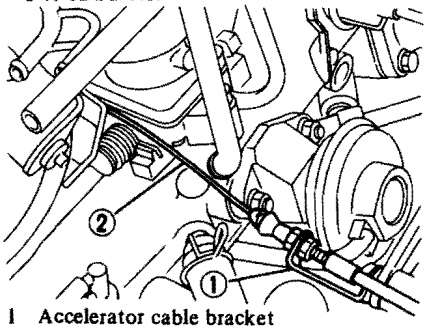

Fig. 3-58 Installing accelerator cable.

12) (Vehicle with power steering) Install bracket, oil pump ASSY and oil pump belt. After adjusting the belt tension (refer to Chapter "Steering System"), tighten lock bolt and attach idler cap.

Torque	
Nut A (one)	44 – 54 N·m (4.5 – 5.5 kg-m, 33 – 40 ft-lb)
Bolt B (two)	44 – 54 N·m (4.5 – 5.5 kg-m, 33 – 40 ft-lb)
Bolt C (three)	25 – 34 N·m (2.5 – 3.5 kg-m, 18 – 25 ft-lb)
Bolt D (one)	20 – 29 N·m (2 – 3 kg-m, 14 – 22 ft-lb)

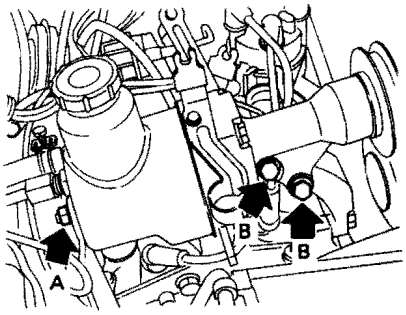

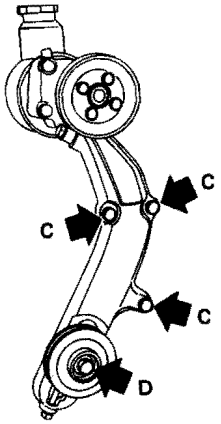

Fig. 3-59 Fitting bolts and nuts

13) Install radiator on the car body, and connect hoses and electric wiring.

Torque	10 – 18 N·m (1.0 – 1.8 kg-m, 7 – 13 ft-lb)

Downloaded from www.Manualslib.com manuals search engine

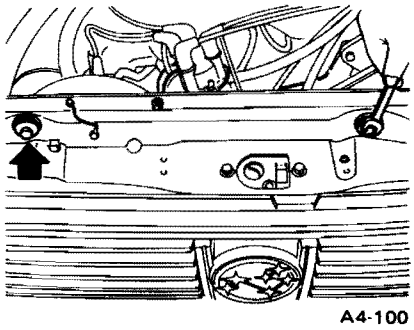

Fig. 3-60

a. Ground wiring of radiator
b. Connectors for thermoswitch and fan motor
c. Inlet and outlet hoses to radiator
d. (AT only) Cooler hoses to radiator
e. Inlet and outlet hoses to heater unit

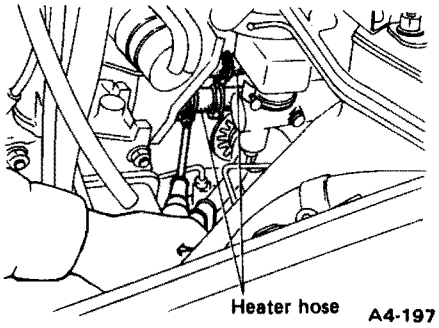

Fig. 3-61

f. Then, fill radiator with SUBARU genuine coolant to the specified level.

14) Connect electric wiring as before.

a. Two multiple connectors for engine wiring harness

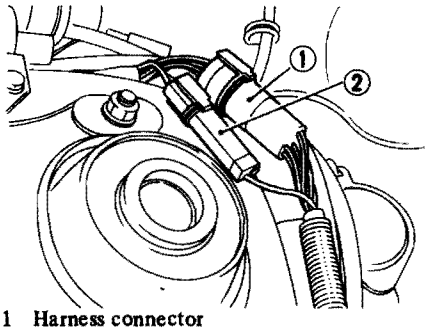

1 Harness connector
2 Harness connector for auto-choke, and carburetor selection (C-W)

A4-245

Fig. 3-62

b. High tension cords
c. Connectors for alternator

NOTE:
(Vehicle with power steering) Securely fit cord supporter onto blow-by hose paint marking and high tension cord.

15) Connect hoses as before.

a. (AT) Vacuum hose to vacuum pipe for kick-down solenoid

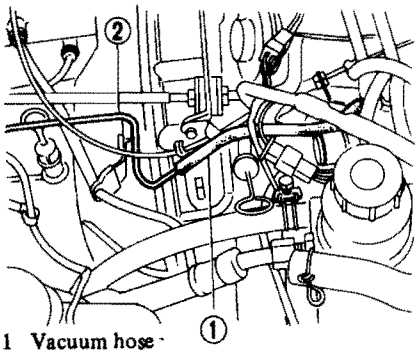

1 Vacuum hose
2 Vacuum pipe

A4-188

Fig. 3-63

b. Vacuum hose to intake manifold for brake booster (Master-vac)

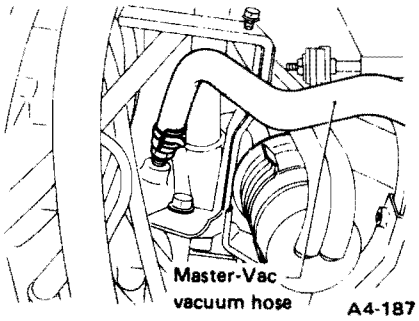

Fig. 3-64 Connecting master-vac vacuum hose

c. Vacuum hose, carburetor vent hose and purge hose to pipe complete

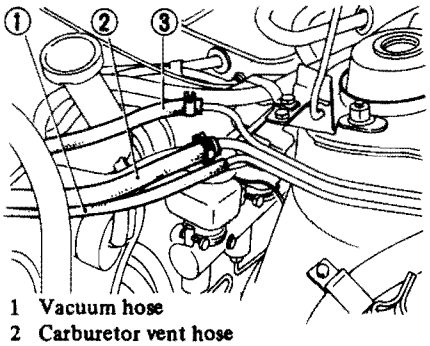

1 Vacuum hose
2 Carburetor vent hose
3 Purge hose

A4-186

Fig. 3-65 Connecting hoses

d. Fuel delivery hose and fuel return hose to carburetor

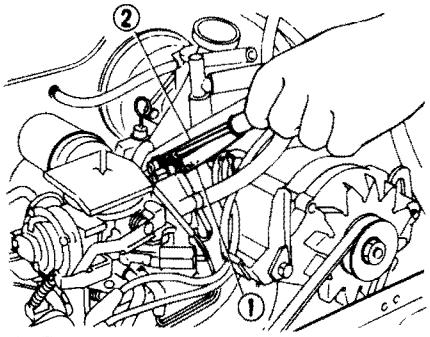

1 Fuel delivery hose
2 Fuel return hose

A4-185

Fig. 3-66 Connecting fuel hoses

16) Attach air cleaner onto carburetor and connect the following hoses.

① Air intake hose
② P.C.V. hose
③ P.C.V. vacuum hose
④ A.T.C. vacuum hose
⑤ Vacuum hose to thermo vacuum valve II (Hitachi carburetor) or thermo vacuum valve III (C-W carburetor)
⑥ Vacuum hose to thermo vacuum valve I
⑦ Hose to A.S.V.

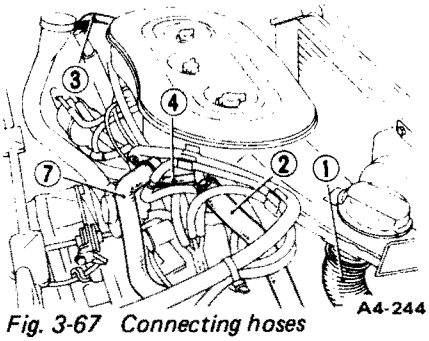

Fig. 3-67 Connecting hoses

Then, tighten bolts and wing nuts securely.

17) Put hoses onto stay, and hold them with hose clamp.

① Vacuum hose
② Carburetor vent hose
③ Fuel delivery hose
④ Fuel return hose
⑤ Purge hose

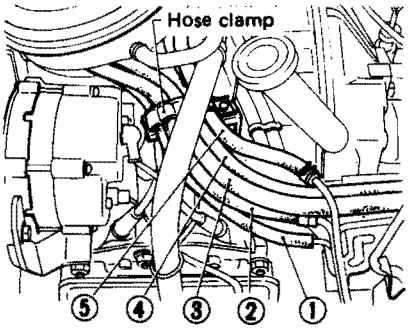

Fig. 3-68

A4-181

Downloaded from www.Manualslib.com manuals search engine

18) Install ground cable onto battery and engine, and ground wiring for noise condenser onto engine.
19) Attach spare wheel & tire in position.
20) Close engine hood, and lock it thoroughly.

4. Inspection and Test

1) Check both the engine oil and coolant levels to ensure that they are even with the specified marks. Start the engine and check for the condition of various parts. If necessary, take corrective action.
Check the exhaust pipe connection to make sure that there is no sign of gas leakage.
2) Stop the engine and allow it to rest for some length of time. Check the engine oil and coolant levels again. If the levels are below the specified marks, replenish as necessary.

NOTE:
The radiator is a high pressure type. Never open the radiator cap while the engine is hot. Doing so may burn your hand. Allow the engine to cool off before checking the coolant level.

3-5. Removal

1) Install Engine Stands (399814300 x 2) and drain the engine oil and coolant by removing engine oil drain plug and coolant drain plug. After draining, install plugs in place.

NOTE:
Take care not to allow oil or water to come in contact with the clutch cover or disc. (MT)

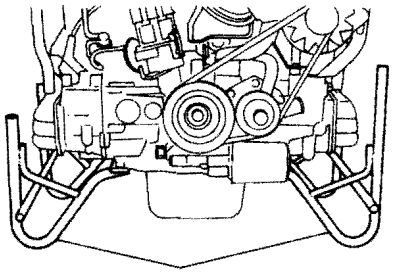

Engine Stand (399814300 x 2)

A5-472

Fig. 3-69 Installing engine stand

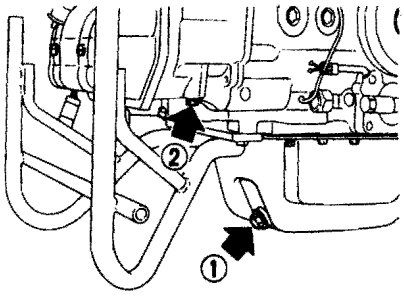

1 Oil drain plug
2 Coolant drain plug

A5-255

Fig. 3-70 Position of drain plugs

2) Carburetor protector. [For 49 States (except 4WD & 4WD-AT) and California]
3) Distributor.
a. Disconnect vacuum hose from distributor.
b. Unclamp distributor lead wire.
c. Disconnect spark plug cords from spark plugs and cord supporters, and distributor cord from cord supporter.
d. Remove distributor and distributor plate.
4) Alternator with air cleaner bracket, spark plug cord stay and drive belt.
5) E.G.R. pipe cover.
6) ASV pipe and ASV.
7) Battery cable bracket and ASV bracket [vehicle without power steering for 49 States (except 4WD & 4WD-AT)] or oil pump bracket (vehicle with power steering).
8) Loosen the connectors of E.G.R. pipe at intake manifold and cylinder head.
9) Disconnect the wiring harness lead of oil pressure switch or oil pressure gauge.
10) Disconnect connecting hoses from rocker covers.
11) Unclamp heater hose.
12) Disconnect two water by-pass hoses and heater hose from intake manifold.
13) Intake manifold ASSY and E.G.R. pipe.
14) Generator bracket complete and generator bracket 3 as an ASSY, and bracket 2.
15) Oil filler duct and oil filler duct stay as an ASSY.
* Remove stiffener 2 at this time (4WD).
16) Pulley by tapping it lightly.

NOTE:
a. Insert a screwdriver or the like into a hole in the drive plate (AT) or the flywheel (MT) through the timing hole to prevent the crankshaft from turning.
b. Use Puller Set (899524100) in such a case of pulley fitted tightly.

17) Oil pump together with oil filter.
18) Water pump, hose, pipe complete and by-pass hose as an ASSY and another by-pass hose.
19) Clutch cover and clutch disc.

NOTE:
a. Insert a screwdriver or the like into a hole in the flywheel through the timing hole to prevent the flywheel from turning.
b. Take care not to allow oil or water to come in contact with the clutch disc.

20) Flywheel with O-ring (MT) or converter drive plate with back plate and O-ring (AT).

NOTE:
Insert a screwdriver or the like into a hole in the converter drive plate through the timing hole to prevent it from turning.

21) Invert engine.
22) Crankcase oil pan, oil pan gasket and transmission cover II (MT).

Downloaded from www.Manualslib.com manuals search engine

23) Invert engine.
24) Flywheel housing.
25) Spark plugs.
26) Valve rocker covers and gaskets.
27) After loosening valve rocker lock nuts and adjusting screws for other than hydraulic valve lifters, remove the valve rocker assemblies and valve push rods.

NOTE:
a. Never loosen valve rocker lock nuts and adjusting screws for hydraulic valve lifters.
b. If the push rods are to be reused, keep them in order, so that they are installed in the original positions.

28) Cylinder head attaching nuts.

NOTE:
Loosen nuts according to the sequence below.

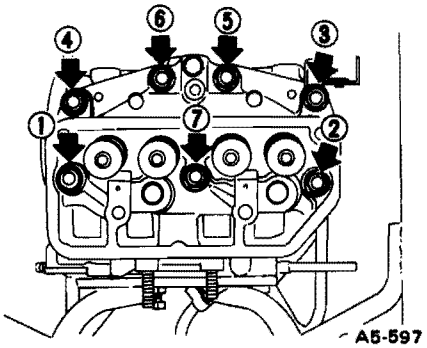

Fig. 3-71 Loosening sequence of cylinder head nuts

29) Cylinder heads and cylinder head gaskets.
30) Remove bolt and nut retaining oil strainer stay.
If necessary, drive out oil strainer together with stay as a unit.

NOTE:
a. Use a chisel when removing the oil strainer.
b. Never attempt to remove the strainer unless it is really necessary.

31) Piston pin circlip on the rear side of each #3 and #4 piston;
Set piston to its bottom dead center by turning crankshaft and insert long nose pliers through the rear service hole to reach circlip.

NOTE:
To turn the crankshaft with a wrench, install the crankshaft pulley bolt on the crankshaft front end.

32) Piston pins for #3 and #4 pistons, using Piston Pin Remover (399094310) inserted through the rear service hole.

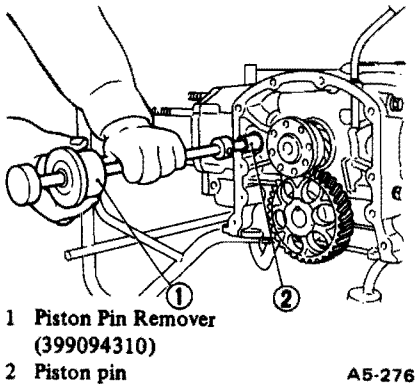

Fig. 3-72 Removing piston pin

33) Crankcase plugs from crankcase with an Allen wrench 14 mm (0.55 in) wide across flats.

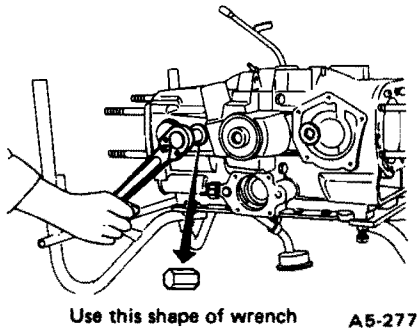

Fig. 3-73 Removing crankcase plug

34) Piston pin circlips and piston pins for #1 and #2 pistons in the same way as before, but use the front service holes (crankcase plug holes) this time.
35) Straighten lockwashers for camshaft attaching bolts, working through the camshaft gear holes, and remove bolts.
36) Tilt crankcase, and take out hydraulic valve lifters.

NOTE:
Keep them in order so that they are not mixed up.

37) Separate crankcase by removing bolts and nuts with #1 and #3 cylinders facing upward.

NOTE:
a. Use Valve Lifter Clips (899804100) to prevent the lifters (other than hydraulic valve lifter) in the upper crankcase from dropping off.
b. Before separating the crankcase, pull the camshaft toward the rear so that is does not interfere with the crankcase.
c. Also remove the crankcase hanger (F) and stiffener (4WD).

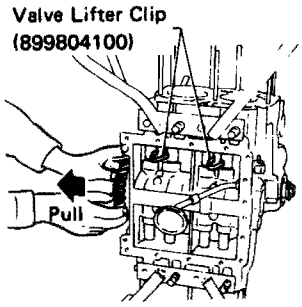

Fig. 3-74 Pulling camshaft

38) Oil seal at the front of crankcase, O-ring and back-up ring.
39) Oil seal at the front of crankcase, O-ring and back-up ring.
40) Crankshaft together with connecting rods, distributor gear and crankshaft gear as a unit.
41) Camshaft together with camshaft gear and camshaft plate.
42) Solid valve lifters and keep them in order, so that they can be reinstalled into their original holes.
43) Pistons from crankcase.

NOTE:
a. Keep the pistons and piston pins together for each cylinder so that they are not mixed up.
b. Make marks on the pistons so as not to change their installed positions.

44) Crankshaft bearings.

NOTE:
If the bearings are to be used again, do not mix them up.

45) Oil pressure switch (Vehicle without pressure gauge) or plug (Vehicle with pressure gauge).
46) Engine Stands (399814300 x 2) from the crankcase halves.

Downloaded from www.Manualslib.com manuals search engine

3-6. Disassembly

1. Intake Manifold Assembly

1) Hitachi Carburetor Type for 49 States (except 4WD & 4WD-AT) and California

1) Disconnect wiring harness.
2) Remove vacuum hoses, hoses and related parts.
a. Thermostat cover, solenoid valve I and bracket, protector stay, gasket and thermostat.
b. Actuator ASSY (A/C only), clip and stay & clip.
c. E.G.R. valve, gasket and duty solenoid valve connector clamp.
d. Carburetor, two gaskets and an insulator.
e. P.C.V. hose.
f. Heater hose.
g. Duty solenoid valves (slow and main) and carburetor protector 2.
h. Vacuum pipe CP and carburetor protector 3.
i. Thermo vacuum valve III.
j. P.C.V. valve.
k. Thermo vacuum valve I.
l. Accelerator cable bracket.
m. Thermosensor.
n. Solenoid valve II (except for California).
o. Solenoid valve III.

2) Hitachi Carburetor Type for 49 States 4WD & 4WD-AT and Canada

1) Disconnect wiring harness.
2) Remove (vacuum) hoses and related parts.
a. Thermostat cover, stay, gasket and thermostat
b. Actuator ASSY (A/C only), clip and stay & clip
c. E.G.R. valve, gasket and AAV pipe & hose
d. Carburetor, two gasket and insulator
e. P.C.V. hose
f. Heater hose
g. Vacuum pipe
h. Thermo vacuum valve II
i. P.C.V. valve
j. Thermo vacuum valve I
k. Accelerator cable bracket
l. Thermosensor

3) C-W Carburetor Type

1) Disconnect wiring harness.
2) Remove vacuum hoses, hoses, and related parts.
a. Thermostat cover, gasket and thermostat.
b. Solenoid valve I.
c. Actuator ASSY (A/C only).
d. E.G.R. valve and gasket.
e. Carburetor, two gaskets and an insulator.
f. P.C.V. hose.
g. Heater hose.
h. Stay & clip.
i. Clip.
j. P.C.V. valve.
k. Thermo vacuum valve I.
l. Thermosensor.
m. Vacuum pipe CP.
n. Solenoid valve II.

2. Valve Rocker Assembly

Disassemble valve rocker ASSY to each component part.

NOTE:
a. Keep the disassembled parts in order.
b. Never loosen rocker arm screws for hydraulic valve lifter. In addition, be sure not to mix rocker arms since their screws are adjusted with every cylinder.

3. Cylinder Head

1) Remove valves, springs, spring retainers, and retainer keys from cylinder head, by using Spring Press (899724100).

NOTE:
Put a mark on the individual valves, and be careful not to mix them up.

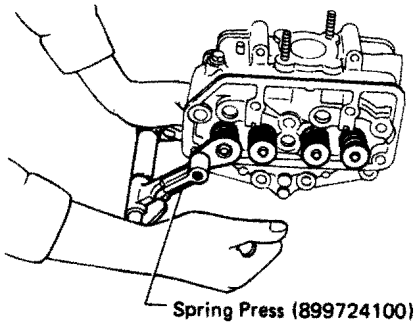

Fig. 3-75 Removing valve and spring

2) Remove spacer with gasket.

4. Crankshaft

Remove connecting rods from crankshaft by unscrewing connecting rod nuts.
Remove bearings from connecting rod.

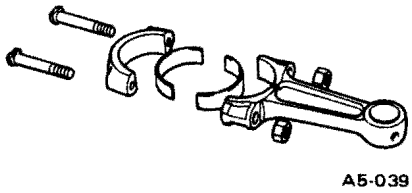

Fig. 3-76 Disassembled connecting rod

NOTE:
a. Arrange the disassembled parts in order and be careful not to mix them up.
b. For the replacement of connecting rod small end bushing, refer to 14. Connecting Rod in 3-7.

5. Camshaft

Remove cam gear from camshaft using Remover Set (899714110) and press. Then remove woodruff key and camshaft plate.

6. Piston

Remove piston rings with a piston ring expander. Also remove circlip.

Downloaded from www.Manualslib.com manuals search engine

NOTE:
Arrange the removed piston rings in order and be careful not to mix them up.

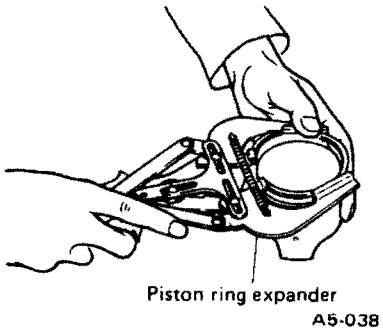

Fig. 3-77 Removing piston rings

7. Oil Pump

Disassemble oil pump to each component part.
a. Oil filter
b. Two screws
c. Oil pump body holder, drive gear, rotor and O-ring
d. O-ring, by-pass valve spring and ball
e. Oil pressure gauge or plug
f. Relief valve plug, two washers, spring and relief valve

8. Water Pump

Disassemble water pump to each component part.
a. Water pump pulley
b. Water pump shaft

NOTE:
Do not press the shaft, or the bearings will be damaged. Press the bearing outer race.

c. Impeller
d. Mechanical seal

3-7. Inspection and Adjustment

1. Precautions

1) Before cleaning parts, make sure that no leakage exists in parts which carry coolant or oil.
2) Clean all parts carefully and make sure that adhering gaskets and other substances are removed.
3) Blow compressed air into the oil passages to make sure that they are not clogged.
4) When removing deposits such as carbon, be careful not to damage the part surface.
5) Arrange all relative parts in order, so that they are not mixed up.

2. Cylinder Head

1) Make sure that no crack or other damage exists. In addition to visual inspection, inspect important areas by means of red check.
2) Measure the warping of the cylinder head surface that mates with crankcase by using a straight edge and thickness gauge.
If the warping exceeds 0.05 mm (0.0020 in), regrind the surface with a surface grinder.

Warping limit		0.05mm (0.0020 in)
Grinding limit		0.5mm (0.020 in)
Standard height of cylinder head	1600 cc Engine	89.6 mm (3.528 in)
	1800 cc Engine	90.6 mm (3.567 in)

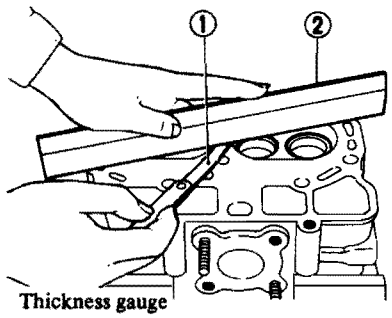

1 Thickness gauge
2 Straight edge
A5-287

Fig. 3-78 Measuring cylinder head for warping

NOTE:
Uneven torque for the cylinder head nuts can cause warping. When reassembling, pay special attention to the torque so as to tighten evenly.

3) Inspect intake and exhaust valve seats, and correct the contact surfaces if they are defective or when valve guides are replaced.

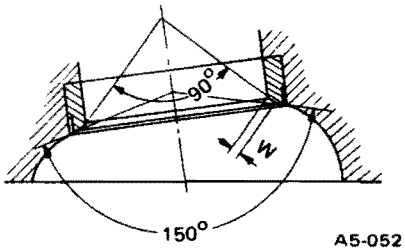

Fig. 3-79 Dimensions of intake and exhaust valve seats

W	Intake	0.7 – 1.3 mm (0.028 – 0.051 in)
	Exhaust	1.0 – 1.8 mm (0.039 – 0.071 in)
Wear limit of valve seat (measured in direction of valve axis)		0.5 mm (0.020 in) for both intake and exhaust valves

Downloaded from www.Manualslib.com manuals search engine

The correction procedure is as follows:

a. Precautions

(1) When valve seat correction is required, check intake and exhaust valve stems and valve guides for wear, and the springs for squareness, tension, etc. If defective, replace them before proceeding the valve seat correction work.

(2) When reconditioning valve and valve seat surfaces, remove intake valve oil seals. Install new oil seals with oil after completing the work.

b. Reface valve seat with valve seat cutters or grinders to the dimensions shown in the above figure.

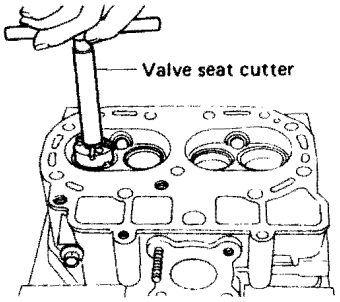

Fig. 3-80 Refacing valve seat with valve seat cutter

NOTE:

Refacing of the valve seat should be closely coordinated with the refacing of the valve face, so that the finished seat and valve face will be concentric and specified interference angle will be maintained.

c. Apply a thin coat of Prussian blue or red lead to the contacting surface of valve to see the contacting condition of valve and valve seat.

d. Rotate valve with light pressure. If the blue or red lead is transferred to the center of the valve seat surface, the contact is satisfactory.

e. In case of improper contact, apply a small amount of grinding compound (about #400) on the valve surface and lap the valve and seat surface so that they obtain proper fit.

NOTE:

The above is important because the valve and seat must have a gastight fit.

f. Clean valves and valve seats to remove chips.

4) Inspect exhaust pipe stud bolts installed on the cylinder head, and replace if defective.

Protrusion length of stud bolts
54 mm (2.13 in)

3. Valve Guide

Check the clearance between valve guide and stem. The clearance can be checked by measuring the outside diameter of valve stem and the inside diameter of valve guide with outside and inside micrometers respectively.

If the clearance between valve guide and stem exceeds the specification, replace guide as follows:

Specifications for valve stem and valve guide		
Standard clearance between valve guide and valve stem	Intake	0.035 – 0.065 mm (0.0014 – 0.0026 in)
	Exhaust	0.040 – 0.070 mm (0.0016 – 0.0028 in)
Limit of clearance between valve guide and valve stem	Intake	0.15 mm (0.0059 in)
	Exhaust	0.15 mm (0.0059 in)
Standard inside diameter of valve guide		8.000 – 8.015 mm (0.3150 – 0.3156 in)
Standard diameter of valve stem	Intake	7.950 – 7.965 mm (0.3130 – 0.3136 in)
	Exhaust	7.945 – 7.960 mm (0.3128 – 0.3134 in)

a. Place cylinder head on Cylinder Head Table (399765101) with the combustion chamber upward so that valve guides enter the holes in Cylinder Head Table.

b. Insert Valve Guide Remover (899764104) into valve guide and press it down to remove valve guide.

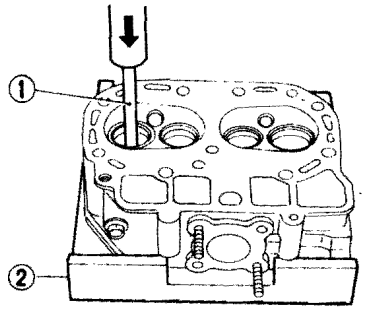

1 Valve Guide Remover (899764104)
2 Cylinder head table (399765101)

Fig. 3-81 Removing valve guide

c. Turn cylinder head upside down and place Valve Guide Adjuster (899768602 for exhaust valve guide, 899768603 for intake valve guide) as shown in the figure.

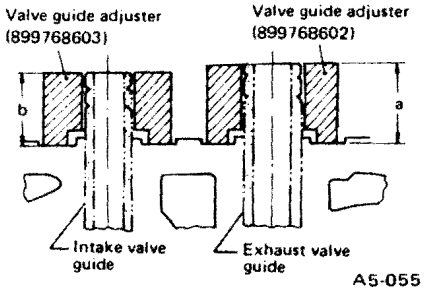

Fig. 3-82 Valve guide adjusters

d. Before installing new valve guide, make sure that neither scratches nor damages exist on the inside surface of the valve guide holes in cylinder head.

e. Put new valve guide, coated with sufficient oil, in cylinder, and insert Valve Guide Remover (899764104) into valve guide. Press in until the valve guide upper end is flush with the upper surface of Valve Guide Adjuster.

Downloaded from www.Manualslib.com manuals search engine

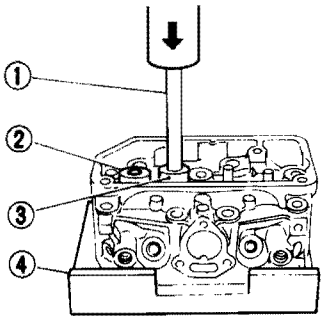

1 Valve Guide Remover (899764104)
2 Valve Guide Adjuster (899768603)
3 Valve Guide Adjuster (899768602)
4 Cylinder Head Table (399765101)

A5-290

Fig. 3-83 Installing valve guide

f. Check the valve guide projection.

Valve guide projection	Intake (b)	17.5 – 18.5 mm (0.689 – 0.728 in)
	Exhaust (a)	22.5 – 23.5 mm (0.886 – 0.925 in)

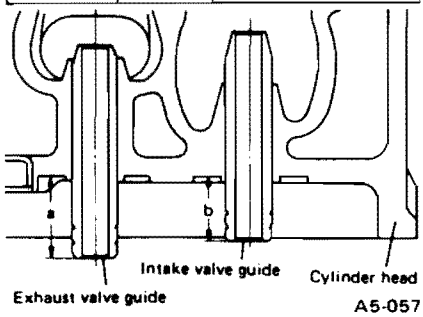

Fig. 3-84 Valve guide projection

g. Ream the inside of valve guide with Valve Guide Reamer (899764105). Gently rotate the reamer clockwise while pressing it lightly into valve guide, and return it also rotating clockwise. After reaming clean valve guide to remove chips.

NOTE:

a. The outside diameter of the reamer should be adjusted to 8.004 to 8.010 mm (0.3151 to 0.3154 in).

b. Apply engine oil to the reamer when reaming.

c. If the inner surface of the valve guide is torn, the edge of the reamer should be slightly ground with an oil stone.

d. If the inner surface of the valve guide becomes lustrous and the reamer does not cut chips, use a new reamer or remedy the reamer.

h. Recheck the contact condition between valve and valve seat after replacing valve guide.

4. Intake Valve Oil Seal

Replace oil seal with new one, if lip is damaged or spring is out of place, or when the surfaces of intake valve and valve seat are reconditioned or intake valve guide is replaced.

Press in oil seal to the specified dimension indicated in the figure, using Oil Seal Installer (898858600).

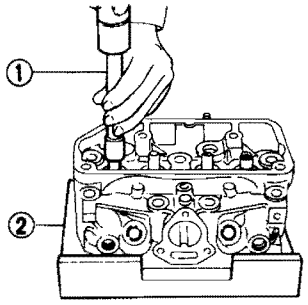

1 Oil Seal Installer (898858600)
2 Cylinder Head Table (399765101)

A5-291

Fig. 3-85 Installing oil seal

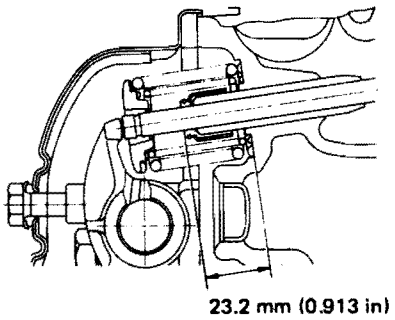

Fig. 3-86 Installed position of oil seal

NOTE:

Apply oil to the oil seal prior to pressing.

5. Intake and Exhaust Valves

1) Inspect the flange and stem of valve, and replace if damaged, worn, or deformed, or if "H" is less than the specified limit.

	H	
	Standard	Limit
Intake	1 mm (0.039 in)	0.5 mm (0.020 in)
Exhaust	1.3 mm (0.051 in)	0.8 mm (0.031 in)

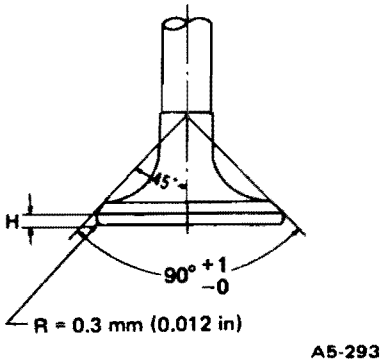

Fig. 3-87 Valve head dimensions

	Intake valve	Exhaust valve
Angle of valve surface that contacts valve seat	90° +1° −0	
Valve overall length	109 mm (4.29 in)	109.3 mm (4.30 in)

2) If the contact surface of valve is damaged, or if the stem end is recessed, correct with a valve refacer, grinding as little as possible. The contact surface should be at right angle with the valve axis.

Downloaded from www.Manualslib.com manuals search engine

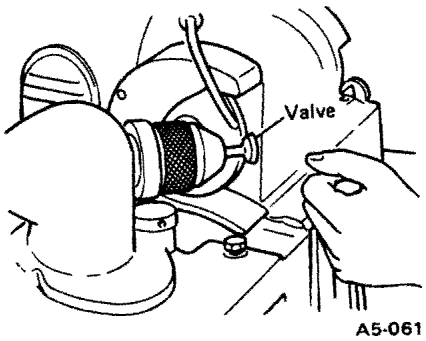

Fig. 3-88 Grinding valve

3) Put a small amount of grinding compound on the seat surface and lap the valve and seat surface. Also refer to 2. Cylinder Head 3) at this time. Install a new intake valve oil seal after lapping.

Specifications of valve spring with solid valve lifter		
	Outer spring	Inner spring
Free length	45.3 mm (1.783 in)	48.8 mm (1.921 in)
Tension/spring height	146.1 – 169.7 N (14.9 – 17.3 kg, 32.9 – 38.1 lb)/ 39.5 mm (1.555 in)	84.3 – 98.1 N (8.6 – 10.0 kg, 19.0 – 22.1 lb)/ 37.5 mm (1.476 in)
	500.2 – 568.8 N (51.0 – 58.0 kg, 112.5 – 127.9 lb)/ 30.5 mm (1.201 in)	185.4 – 214.8 N (18.9 – 21.9 kg, 41.7 – 48.3 lb)/ 28.5 mm (1.122 in)
Squareness	2.0 mm (0.079 in) or less	2.1 mm (0.083 in) or less

6. Valve Springs

Check valve springs for damage, free length, and tension. Replace valve spring if it is not to the specifications presented below.

NOTE:
To measure the squareness of the valve spring, stand the spring on a surface plate and measure its deflection at the top using a try square.

Specifications of valve spring with hydraulic valve lifter		
	Outer spring	Inner spring
Free length	48.5 mm (1.909 in)	53.0 mm (2.087 in)
Tension/spring height	228.5 – 261.8 N (23.3 – 26.7 kg, 51.4 – 58.9 lb)/ 39.5 mm (1.555 in)	115.7 – 133.4 N (11.8 – 13.6 kg, 26.0 – 30.0 lb)/ 37.5 mm (1.476 in)
	518.8 – 599.2 N (52.9 – 61.1 kg, 116.6 – 134.7 lb)/ 32.0 mm (1.260 in)	201.0 – 230.5 N (20.5 – 23.5 kg, 45.2 – 51.8 lb)/ 30.0 mm (1.181 in)
Squareness	2.1 mm (0.083 in) or less	2.3 mm (0.091 in) or less

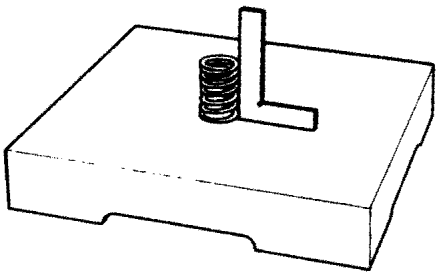

Fig. 3-89 Checking spring squareness

7. Valve Rocker

1) Inspect the inner surface of valve rocker arm and the outer surface of rocker shaft for wear.

Clearance between rocker arm and shaft	0.013 – 0.052 mm (0.0005 – 0.0020 in)
Inner diameter of rocker arm	18.016 – 18.034 mm (0.7093 – 0.7100 in)
Outer diameter of shaft	17.982 – 18.003 mm (0.7080 – 0.7088 in)

Replace valve rocker arm or shaft if defective.

2) If the rocker arm surface that contacts the stem head is noticeably worn, replace the rocker arm. If worn slightly in a stepped shape, use a valve refacer and correct the surface, grinding as little as possible.

Downloaded from www.Manualslib.com manuals search engine

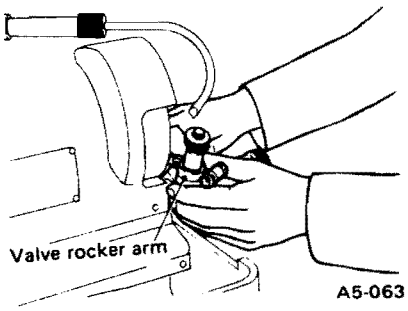

Fig. 3-90 Correcting valve rocker arm

3) Replace rocker shaft spring washers if worn excessively.

8. Valve Lifter

1) Solid Valve Lifter

Specifications for lifter and lifter hole		
Standard inner diameter of lifter hole		21.000 – 21.021 mm (0.8268 – 0.8276 in)
Standard outer diameter of lifter		20.949 – 20.970 mm (0.8248 – 0.8256 in)
Clearance between lifter and lifter hole	Standard	0.030 – 0.072 mm (0.0012 – 0.0028 in)
	Limit	0.100 mm (0.0039 in)

1) Check valve lifters for wear and damage, and replace or correct if defective.
2) Check the lifter holes in the crankcase for damage, etc., and correct or replace as necessary.

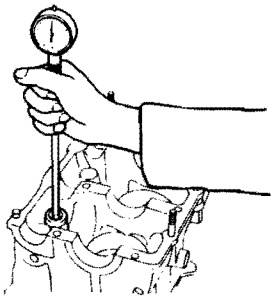

Fig. 3-91 Checking lifter hole

2) Hydraulic Valve Lifter

Hydraulic valve lifter and lifter hole		
Standard inner diameter of lifter hole		20.988 – 21.040 mm (0.8263 – 0.8283 in)
Standard outer diameter of lifter		20.950 – 20.968 mm (0.8248 – 0.8255 in)
Lifter to lifter hole clearance	Standard	0.020 – 0.090 mm (0.0008 – 0.0035 in)
	Limit	0.100 mm (0.0039 in)

NOTE:
Be extremely careful to prevent any foreign matter from getting into the valve lifter as it is machined to a high degree of precision.

1) Measure the outer diameter of the valve lifter. If it is outside the specified value, replace it. Also check it for wear or damage and replace it as necessary.
2) Measure the bore diameter in the crankcase at the valve lifter location.
If the clearance between the bore diameter and outer diameter of the lifter exceeds the specified limit, replace the lifter.
3) Forcibly insert the push rod seat with push rod to see if the seat moves into the valve body. If it does, check the following reasons and repair it as follows:

- Air is sucked into the pressure chamber.
- Plunger-to-body clearance is too large.
- Foreign matter and/or damage exists around check ball and plunger.

a. Remove the following parts in the order indicated.
   - Clip
   - Push rod seat
   - Plunger
   - Check ball, check ball spring and check ball retainer
   - Plunger spring

NOTE:
a. Never mix up plunger, push rod seat and valve body amoung valve lifters.
b. Use a wire (as shown in Fig. 3-92) to facilitate removal of the plunger.

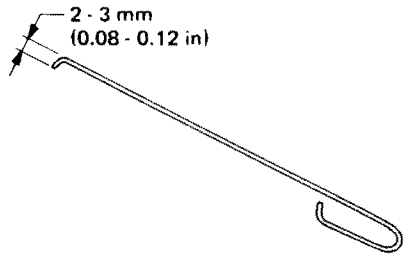

Fig. 3-92

Downloaded from www.Manualslib.com manuals search engine

b. Clean all disassembled parts.
c. Install the check ball, check ball spring and check ball retainer on the plunger, being careful not to tilt them.

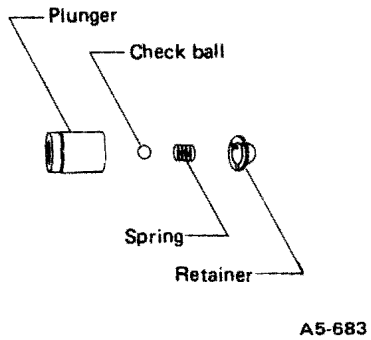

Fig. 3-93

d. Install the plunger spring in the valve body and fill the body with clean engine oil.
e. Insert plunger into valve body and push check ball with drift pin [outer 3.2 mm (1/8 in) dia.] until the plunger comes into contact with the body while making an opening between the check ball and plunger.
f. Insert a suitable pin into the oil hole in the body and remove the drift pin.

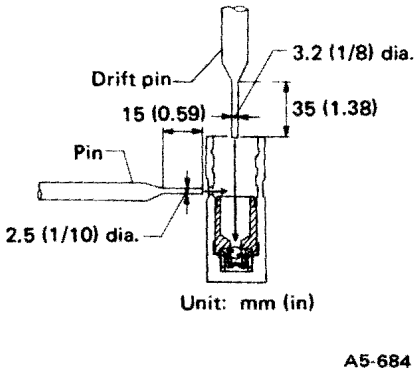

Fig. 3-94

g. After refilling with clean engine oil, insert the push rod seat, install the clip in place and remove the pin.
h. Again make sure that the push rod seat does not move into the valve body when forcibly pushing the seat with the push rod.
If it does, replace the valve lifter with a new one.

9. Push Rod

1) Check for any sign of bending or damage, and replace if defective.

2) Check the oil hole in push rod for clogging and clean if necessary.

Deflection of center		0.4 mm (0.016 in) or less
Overall length	For 1600 (Knurling: 2)	219 – 219.4 mm (8.62 – 8.64 in)
	For 1800 with solid valve lifter (Knurling: 1)	230.7 – 231.1 mm (9.08 – 9.10 in)
	For 1800 with hydraulic valve lifter (Knurling: nothing)	231.7 – 232.2 mm (9.12 – 9.14 in)

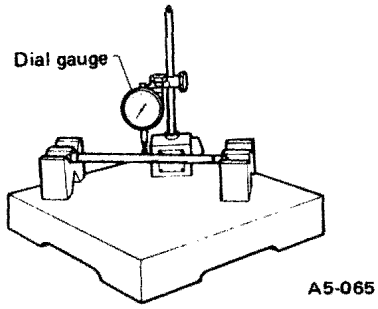

Fig. 3-95 Checking push rod for bending

10. Crankcase

Check crankcase for the following items, and correct or replace if defective.
1) Check for cracks and damage visually. Especially, inspect important parts by means of red check.
2) Check the oil passages for clogging.
3) Check stud bolts on the crankcase for looseness. If any stud bolt is loose, correct or replace. If it is bent, correct so that the cylinder head can be installed smoothly.

Use Stud Bolt Wrench (898878600) to screw the stud bolt into crankcase.

NOTE:
Coat the stud bolt threads with a torque-holding sealant (Loctite 270 or 271, or equivalent) before installation.

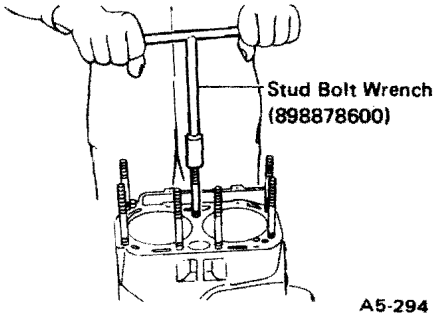

Fig. 3-96 Installing cylinder head stud bolt

4) Inspect the crankcase surface that mates with cylinder head for warping by using a straight edge, and correct by grinding if necessary.

Warping limit	0.05 mm (0.0020 in)

Stud Bolt		
	1,800 cc	1,600 cc
Length	91.5 – 93.5 mm (3.602 – 3.681 in)	90.5 – 92.5 mm (3.563 – 3.642 in)
Torque	34 – 44 N·m (3.5 – 4.5 kg-m, 25 – 33 ft-lb)	

Downloaded from www.Manualslib.com manuals search engine

11. Cylinder and Piston

1) Measure the inner diameter of each cylinder in both the thrust and piston pin directions at the heights shown in the figure, using a cylinder bore gauge.

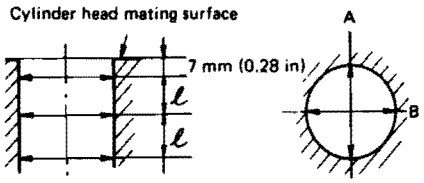

A: Thrust direction
B: Piston pin direction
A5-068

	ℓ
1,600 cc	30 mm (1.18 in)
1,800 cc	33.5 mm (1.319 in)

Fig. 3-97 Positions for cylinder bore measurement

NOTE:
Measurement should be performed at a temperature of 20°C (68°F).

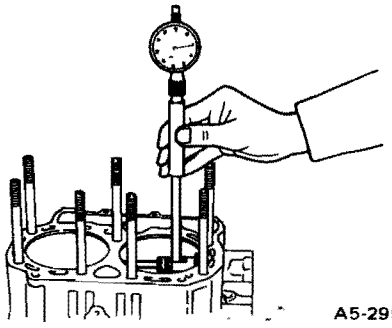

Fig. 3-98 Measuring cylinder bore

2) Boring and honing

a. If the value of taper, out-of-roundness, or cylinder-to-piston clearance measured exceeds the specified limit or if there is any damage on the cylinder wall, rebore it to use an oversize piston.

NOTE:
When any of the cylinders needs reboring, all other cylinders must be bored at the same time, and use oversize pistons. Do not perform boring on one cylinder only, nor use an oversize piston for one cylinder only.

b. Get four of the oversize pistons and measure the outer diameter of each piston at the height shown in the figure. (Thrust direction)

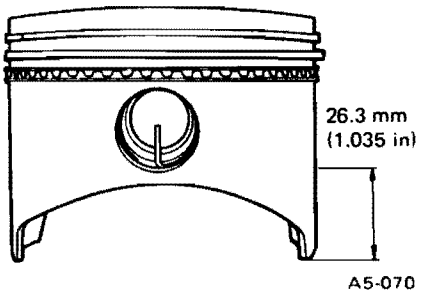

Fig. 3-99 Position for measuring piston diameter

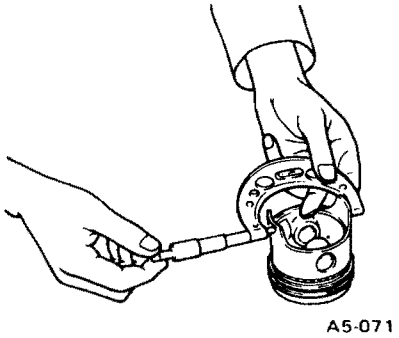

Fig. 3-100 Measuring piston diameter

Piston outer diameter	
Standard	91.960 – 91.990 mm (3.6205 – 3.6216 in)
0.25 mm (0.0098 in) oversize	92.210 – 92.240 mm (3.6303 – 3.6315 in)
0.50 mm (0.0197 in) oversize	92.460 – 92.490 mm (3.6402 – 3.6413 in)

NOTE:
Measurement should be performed at a temperature of 20°C (68°F).

c. If the cylinder inner diameter exceeds the following enlarging limit after boring and honing, replace the crankcase.

Enlarging limit of cylinder inner diameter	0.50 mm (0.0197 in)

NOTE:
Immediately after reboring, the cylinder diameter may differ from its real diameter due to temperature rise. Thus, pay attention to this when measuring the cylinder diameter.

d. Inspect the cylinder bore for taper, out-of-roundness, and diameter differences.

Diameter difference between cylinders	0.050 mm (0.0020 in) or less

NOTE:
Measure the inner diameter of the cylinder when the temperature is 20°C (68°F).

Cylinder bore		
Standard diameter (Both 1800 and 1600)		91.985 – 92.015 mm (3.6214 – 3.6226 in)
Taper	Standard	0.015 mm (0.0006 in)
	Limit	0.050 mm (0.0020 in)
Out-of roundness	Standard	0.010 mm (0.0004 in)
	Limit	0.050 mm (0.0020 in)
Cylinder to piston clearance at 20°C (68°F)	Standard	0.010 – 0.040 mm (0.0004 – 0.0016 in)
	Limit	0.060 mm (0.0024 in)

Downloaded from www.Manualslib.com manuals search engine

12. Piston and Piston Pin

1) Check pistons and piston pins for damage, cracks, and wear and the piston ring grooves for wear and damage. Replace if defective.
2) Measure the piston-to-cylinder clearance at each cylinder as instructed in 11. Cylinder and Piston. If any of the clearances is not to specification, replace the piston or bore the cylinder to use an oversize piston.
3) Make sure that piston pin can be inserted into the piston pin hole with a thumb at 20°C (68°F). Replace if defective.

Specifications for piston and piston pin	
Standard outer diameter of piston pin	20.992 to 21.000 mm (0.8265 to 0.8268 in)
Standard inner diameter of piston pin hole	20.999 to 21.009 mm (0.8267 to 0.8271 in)
Standard clearance between piston pin and hole in piston	0.004 to 0.010 mm (0.0002 to 0.0004 in)
Standard clearance between piston pin and hole in connecting rod	0.005 to 0.040 mm (0.0002 to 0.0016 in)

13. Piston Ring

1) If piston ring is broken, damaged, or worn, or if its tension is insufficient, or when the piston is replaced, replace piston ring with a new one of the same size as the piston.

NOTE:
a. "R" or "N" is marked on the end of the top and second rings. When installing the rings to the piston, face this mark upward.

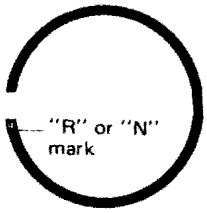

Fig. 3-101 Mark on piston ring

b. The oil ring is a combined ring consisting of two rails and a spacer in between. When installing, be careful not to make misassembly.

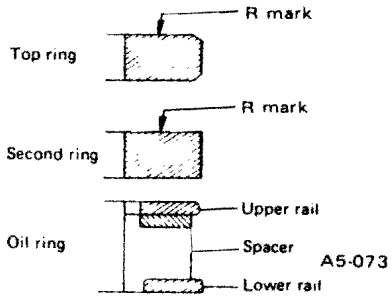

Fig. 3-102 Cross section of piston rings (Riken Piston Ring)

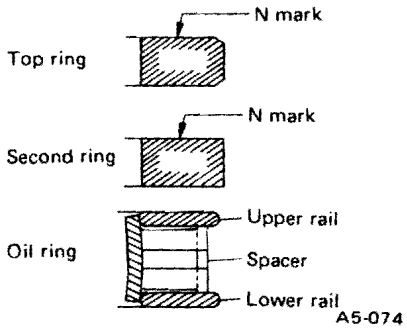

Fig. 3-103 Cross section of piston ring (Nippon Piston Ring)

2) Squarely place piston ring in cylinder and measure the piston ring gap with a thickness gauge.

NOTE:
If the cylinder is not corrected or replaced one, measure the piston ring gap at the bottom of the cylinder, where the wear is little.

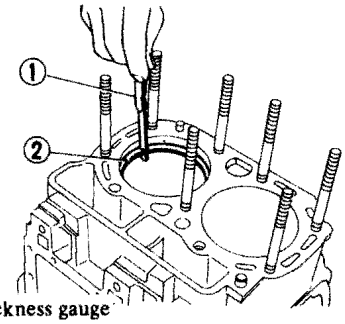

1 Thickness gauge
2 Piston ring
A5-296

Fig. 3-104 Measuring piston ring gap

3) Measure the clearance between piston ring and piston ring groove with a thickness gauge.

NOTE:
Before measuring the clearance, clean the piston ring groove and piston ring.

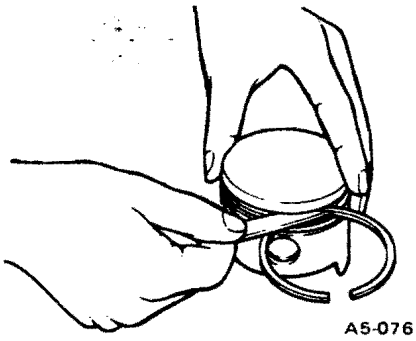

Fig. 3-105 Measuring piston ring groove clearance

		Standard	Limit
Piston ring gap	Top ring	0.20 – 0.35 mm (0.0079 – 0.0138 in)	1.0 mm (0.039 in)
	Second ring	0.20 – 0.35 mm (0.0079 – 0.0138 in)	1.0 mm (0.039 in)
	Oil ring rail	0.20 – 0.90 mm (0.0079 – 0.0354 in)	1.5 mm (0.059 in)

Downloaded from www.Manualslib.com manuals search engine

		Standard	Limit
Clearance between piston ring and piston ring groove	Top ring	0.04 – 0.08 mm (0.0016 – 0.0031 in)	0.15 mm (0.0059 in)
	Second ring	0.03 – 0.07 mm (0.0012 – 0.0028 in)	0.15 mm (0.0059 in)
	Oil ring	0	0

14. Connecting Rod

1) Replace connecting rod, if the large or small end thrust surface is damaged.
2) Check for bend or twist using a connecting rod aligner. Replace connecting rod if the bend or twist exceeds the limit.

Limit of bend or twist per 100 mm (3.94 in) in length	0.10 mm (0.0039 in)

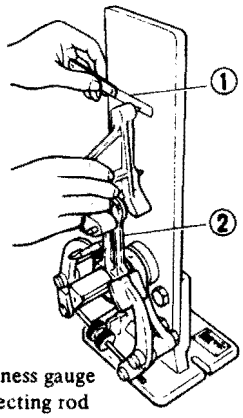

1 Thickness gauge
2 Connecting rod

A5-077

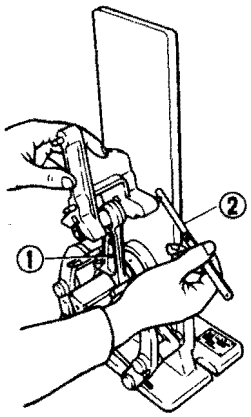

A5-078

1 Connecting rod
2 Thickness gauge

Fig. 3-106 Measuring piston ring groove clearance

3) Install connecting rod fitted with bearing to crankshaft and measure the side clearance (thrust clearance). Replace connecting rod if the side clearance exceeds the specified limit.

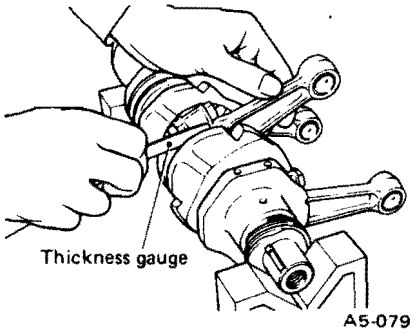

A5-079

Fig. 3-107 Measuring side clearance

Connecting rod side clearance	
Standard	0.070 – 0.330 mm (0.0028 – 0.0130 in)
Limit	0.4 mm (0.016 in)

4) Inspect connecting rod bearing for scar, peeling, seizure, melting, wear, etc.
5) Measure the oil clearance on individual connecting rod bearings by means of plastigauge according to the following procedure.

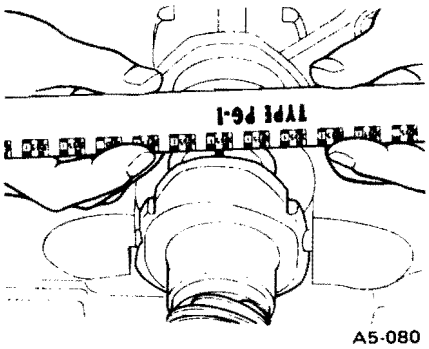

A5-080

Fig. 3-108 Measuring connecting rod oil clearance

a. Wipe off oil, dust, etc. on the surfaces to be measured.
b. Cut the plastigauge to the width of the bearing, place it on the crankpin parallel with the crankshaft axis, and install connecting rod. Tighten connecting rod nuts to 41 N·m (4.2 kg-m, 30 ft-lb).

NOTE:
During this measurement, do not allow relative movement between the crankpin and connecting rod.

c. Remove connecting rod and measure the width of the plastigauge with the scale printed on the plastigauge case.

If any oil clearance is not within specification, replace the defective bearing with a new one of standard size or undersize as necessary, and replace or recondition the crankshaft as necessary. (See the table below.)

6) Inspect bushing at connecting rod small end, and replace if worn or damaged. Also measure the piston pin clearance at the connecting rod small end.

Standard clearance between piston pin and bushing in connecting rod	0 – 0.022 mm (0 – 0.0009 in)

Connecting rod oil clearance	
Standard	0.020 – 0.070 mm (0.0008 – 0.0028 in)
Limit	0.10 mm (0.0039 in)

Downloaded from www.Manualslib.com manuals search engine

Replacement procedure is as follows.

a. Remove bushing from connecting rod with Remover & Replacer (499037000) and press.
b. Press bushing with Remover & Replacer (499037000) after applying oil on the periphery of bushing.
c. Make two 3 mm (0.12 in) holes in bushing.
d. Ream the inside of bushing.

Bushing bore	21.000 – 21.016 mm (0.8268 – 0.8274 in)

Distance between big end and small end hole	1800 cc	116.95 – 117.05 mm (4.6043 – 4.6083 in)
	1600 cc	109.95 – 110.05 mm (4.3287 – 4.3327 in)

e. After completion of reaming, clean bushing to remove chips.

NOTE:
When measuring, place both the front and rear journals on blocks located on a surface plate, and apply a dial gauge to the center journal.

15. Crankshaft and Crankshaft Bearing

1) Clean crankshaft completely and check for cracks by means of red check etc., and replace if defective.
2) Measure the crankshaft bend, and correct or replace if it exceeds the limit.

Crankshaft bend limit	0.035 mm (0.0014 in)

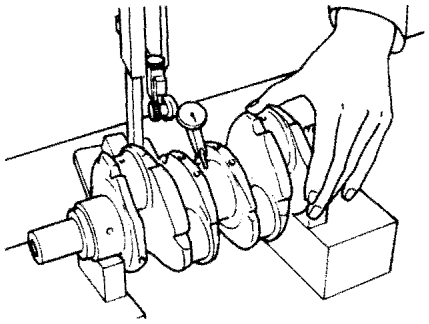

Fig. 3-109 Checking crankshaft bend

3) Inspect the crank journal and crankpin for wear. If not to specifications, replace bearing with an undersize one, and replace or recondition crankshaft as necessary. When grinding crank journal or crankpin, finish them to the specified dimensions according to the undersize bearing to be used. (See the table .)

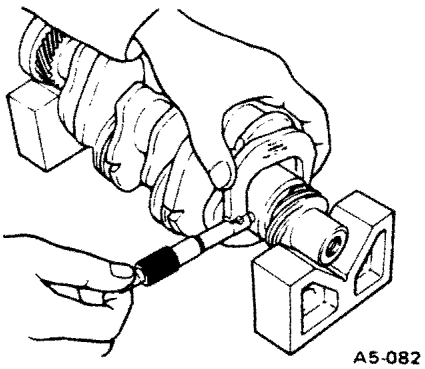

Fig. 3-110 Checking wear of crank journal

Crankpin and crank journal	
Out-of-roundness	0.03 mm (0.0012 in) or less
Taper limit	0.07 mm (0.0028 in)
Grinding limit	0.25 mm (0.0098 in)

Dimensions of crankpin, bearing and bearing bore			
Part / Size	Crankpin diameter	Connecting rod bearing thickness at center	Connecting rod bearing bore diameter
Standard	44.995 – 45.010 mm (1.7715 – 1.7720 in)	1.477 – 1.485 mm (0.0581 – 0.0585 in)	48.000 – 48.019 mm (1.8898 – 1.8905 in)
0.05 mm (0.0020 in) undersize	44.945 – 44.960 mm (1.7695 – 1.7701 in)	1.505 – 1.510 mm (0.0593 – 0.0594 in)	
0.25 mm (0.0098 in) undersize	44.745 – 44.760 mm (1.7616 – 1.7622 in)	1.605 – 1.610 mm (0.0632 – 0.0634 in)	

Downloaded from www.Manualslib.com manuals search engine

Dimensions of crankpin, crank journal and bearing				
Bearing size	Crankpin outer diameter	Crank journal outer diameter		
		1,800 cc engine	1,600 cc engine	
		Front, Center and Rear	Front and Rear	Center
Standard	44.995 – 45.010 mm (1.7715 – 1.7720 in)	54.955 – 54.970 mm (2.1636 – 2.1642 in)	49.957 – 49.970 mm (1.9668 – 1.9673 in)	49.970 – 49.982 mm (1.9673 – 1.9678 in)
0.03 mm (0.0012 in) undersize	–	54.925 – 54.940 mm (2.1624 – 2.1630 in)	49.927 – 49.940 mm (1.9656 – 1.9661 in)	49.940 – 49.952 mm (1.9661 – 1.9666 in)
0.05 mm (0.0020 in) undersize	44.945 – 44.960 mm (1.7695 – 1.7701 in)	54.905 – 54.920 mm (2.1616 – 2.1622 in)	49.907 – 49.920 mm (1.9648 – 1.9654 in)	49.920 – 49.932 mm (1.9654 – 1.9658 in)
0.25 mm (0.0098 in) undersize	44.745 – 44.760 mm (1.7616 – 1.7622 in)	54.705 – 54.720 mm (2.1537 – 2.1543 in)	49.707 – 49.720 mm (1.9570 – 1.9575 in)	49.720 – 49.732 mm (1.9575 – 1.9579 in)

4) Measure the thrust clearance of crankshaft at center bearing. If the clearance exceeds the limit, replace bearing.

Crankshaft thrust clearance	
Standard	0.010 – 0.095 mm (0.0004 – 0.0037 in)
Limit	0.3 mm (0.0118 in)

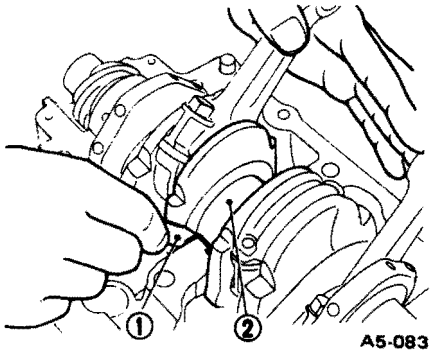

1 Thickness gauge
2 Center bearing part

Fig. 3-111 Checking thrust clearance

5) Inspect individual crankshaft bearings for signs of flaking, seizure, melting, and wear.

6) Measure the oil clearance on each crankshaft bearing by means of plastigauge as follows:

a. Wipe off oil, dust, etc. on the surfaces to be measured.
b. Install bearings in crankcase and set crankshaft in position.
c. Cut the plastigauge to the bearing width and place it on journal parallel with the crankshaft axis. Be careful not to put it on the oil hole or groove. Bring together the crankcase halves and tighten bolts to the specified torque.

NOTE:
During the work, the crankshaft must not be turned nor the crankcase inverted.

Thread size	Torque
10 mm	39 – 47 N·m (4.0 – 4.8 kg-m, 29 – 35 ft-lb)
8 mm	23 – 26 N·m (2.3 – 2.7 kg-m, 17 – 20 ft-lb)
6 mm	4.4 – 5.4 N·m (0.45 – 0.55 kg-m, 3.3 – 4.0 ft-lb)

d. Remove all bolts and separate crankcase. Measure the plastigauge width with the scale printed on the plastigauge case.

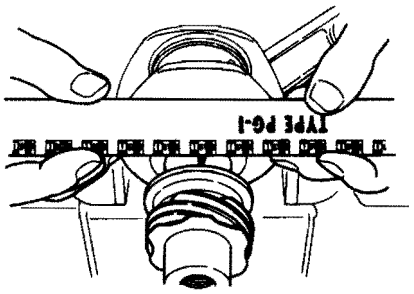

Fig. 3-112 Measuring oil clearance of crank journal

If the measurement is not within the specification, replace defective bearing with an undersize one, and replace or recondition crankshaft as necessary.

Downloaded from www.Manualslib.com manuals search engine

Crankshaft oil clearance			
Engine		1,800 cc	1,600 cc
Standard	Center	0.010 – 0.025 mm (0.0004 – 0.0010 in)	0.010 – 0.030 mm (0.0004 – 0.0012 in)
	Front & Rear	0.010 – 0.030 mm (0.0004 – 0.0012 in)	0.010 – 0.035 mm (0.0004 – 0.0014 in)
Limit	Center	0.045 mm (0.0018 in)	
	Front & Rear	0.055 mm (0.0022 in)	

Dimensions of bearing				
Crankshaft bearing size	Thickness of bearing at center			
	1,800 cc engine		1,600 cc engine	
	Front & Rear	Center	Front & Rear	Center
Standard	2.015 – 2.019 mm (0.0793 – 0.0795 in)	2.015 – 2.028 mm (0.0793 – 0.0798 in)	2.001 – 2.008 mm (0.0788 – 0.0791 in)	2.003 – 2.015 mm (0.0789 – 0.0793 in)
0.03 mm (0.0012 in) undersize	2.030 – 2.034 mm (0.0799 – 0.0801 in)	2.030 – 2.043 mm (0.0799 – 0.0804 in)	2.017 – 2.030 mm (0.0794 – 0.0799 in)	2.017 – 2.030 mm (0.0794 – 0.0799 in)
0.05 mm (0.0020 in) undersize	2.040 – 2.044 mm (0.0803 – 0.0805 in)	2.040 – 2.053 mm (0.0803 – 0.0808 in)	2.022 – 2.035 mm (0.0796 – 0.0801 in)	2.022 – 2.035 mm (0.0796 – 0.0801 in)
0.25 mm (0.0098 in) undersize	2.140 – 2.144 mm (0.0843 – 0.0844 in)	2.140 – 2.153 mm (0.0843 – 0.0848 in)	2.122 – 2.135 mm (0.0835 – 0.0841 in)	2.122 – 2.135 mm (0.0835 – 0.0841 in)

7) Inspect the crankshaft gear teeth and the surface on which oil seal slides for wear, damage, etc., and replace if defective.
8) Inspect distributor drive gear for tooth surface damage, and proper fit of woodruff key, and replace if defective.

16. Camshaft

1) Measure the camshaft bend, and correct or replace if it exceeds the limit.

NOTE:
When the camshaft is replaced, the valve filters also must replaced.

Bend limit	0.05 mm (0.0020 in)

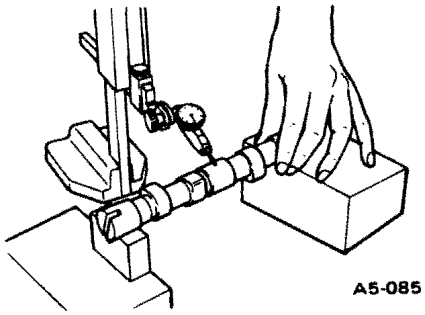

Fig. 3-113 Checking camshaft bend

2) Measure the thrust clearance between camshaft and camshaft plate. If it exceeds the limit, remove cam gear and replace plate.

Downloaded from www.Manualslib.com manuals search engine

Camshaft thrust clearance	
Standard	0.020 – 0.090 mm (0.0008 – 0.0035 in)
Limit	0.2 mm (0.008 in)

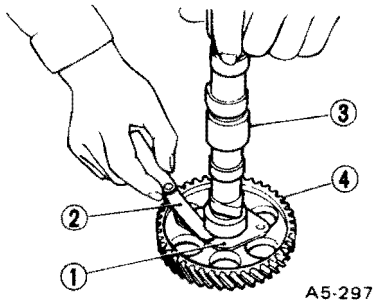

1 Camshaft plate
2 Thickness gauge
3 Camshaft
4 Cam gear

Fig. 3-114 Measuring thrust clearance

Specifications of cam lobe height (intake and exhaust)		
Standard (Dimension "H")	With solid	32.24 – 32.34 mm (1.2693 – 1.2732 in)
	With solid	35.90 – 36.00 mm (1.4134 – 1.4173 in)
Wear limit		0.15 mm (0.0059 in)

Dimension "D"	With conventional valve lifter	27 mm (1.06 in)
	With hydraulic valve lifter	31 mm (1.22 in)

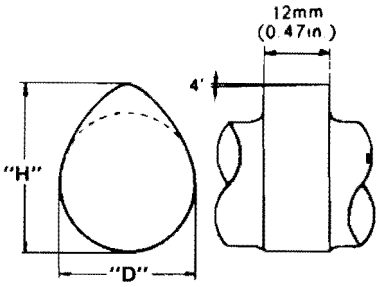

Fig. 3-115 Cam lobe shape

b. If a new cam is used, check its identification mark and groove.

3) Inspect the journals, and replace if damaged or worn.
4) Inspect the cam surface for damage, and measure the total height of the cam. Replace camshaft, if damaged noticeably or worn beyond the limit. If damaged only to a minor degree, grind and correct with an oil stone.

NOTE:

a. The cam lobe is provided with taper of 4 minutes to cause the valve lifter to rotate. Be sure to retain this taper.

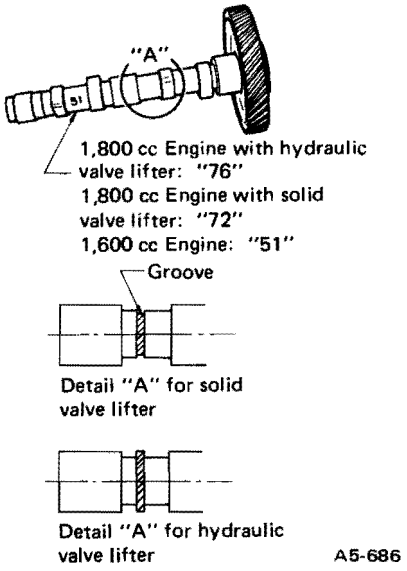

Fig. 3-116 Cam identification

c. Whenever the camshaft is replaced because of its abnormality, replace the valve lifters with new ones too.

5) Inspect the fit of woodruff key (5 x 6.5 x 20 mm) in the camshaft key groove and cam gear key groove, and if defective replace key or gear, or correct the key groove.
6) Inspect camshaft and cam gear contact surfaces for cracks or other damage, and the cam gear tooth surface for wear. Replace cam gear if defective.
7) Measure the cam gear run-out, and replace cam gear if the run-out exceeds the limit.

Limit of run-out	0.25 mm (0.0098 in)

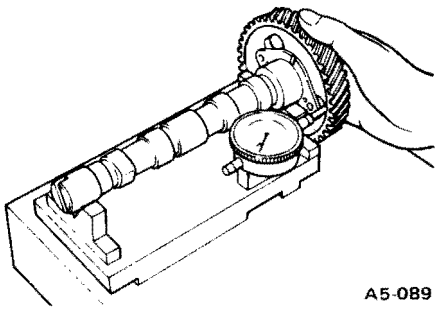

Fig. 3-117 Checking cam gear run-out

8) Measure the backlash between cam gear and crankshaft gear, by using Magnet Base (498247001) and Dial Gauge (498247100). Replace cam gear if the measurement exceeds the specified limit.

Backlash between crankshaft gear and cam gear	
Standard	0.010 – 0.050 mm (0.0004 – 0.0020 in)
Limit	0.10 mm (0.0039 in)

Downloaded from www.Manualslib.com manuals search engine

Standard inner diameter of camshaft journal bores	Front & Center	1,800 cc	32.000 – 32.018 mm (1.2598 – 1.2605 in)
		1,600 cc	26.000 – 26.018 mm (1.0236 – 1.0243 in)
	Rear	36.000 – 36.018 mm (1.4173 – 1.4180 in)	
Standard outer diameter of camshaft journal	Front & Center	1,800 cc	31.959 – 31.975 mm (1.2582 – 1.2589 in)
		1,600 cc	25.959 – 25.975 mm (1.0220 – 1.0226 in)
	Rear	35.959 – 35.975 mm (1.4157 – 1.4163 in)	
Clearance between camshaft journal and journal bore	Standard	0.025 – 0.059 mm (0.0010 – 0.0023 in)	
	Limit	0.100 mm (0.0039 in)	

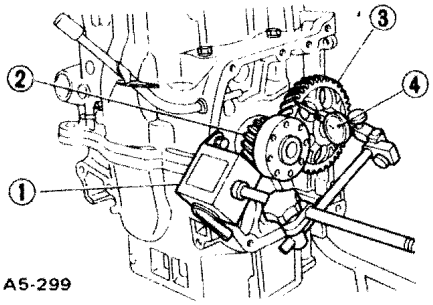

1 Magnet Base (498247001)
2 Crankshaft gear
3 Cam gear
4 Dial Gauge (498247100)

Fig. 3-118 Measure backlash

NOTE:
When replacing the cam gear, use Remover Set (899714110).
Measure the thrust clearance as described in 2) after replacement, and adjust to the specification.

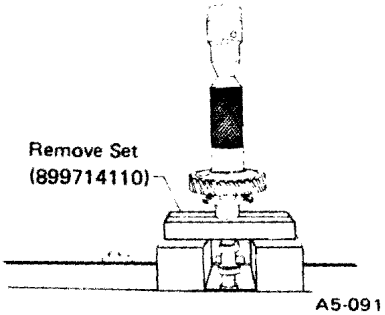

Fig. 3-119 Installing cam gear

17. Oil Seals

Inspect oil seal fitted in flywheel housing and the oil seal fitted at the crankshaft front end for lip wear, damage, hardening, etc., and replace if defective.

Oil seal	1,800 cc	1,600 cc
Front	38 x 59 x 9 mm (1.50 x 2.32 x 0.35 in)	38 x 55 x 9 mm (1.50 x 2.17 x 0.35 in)
Rear	76 x 93 x 10 mm (2.99 x 3.66 x 0.39 in)	70 x 87 x 8.5 mm (2.76 x 34.3 x 0.335 in)

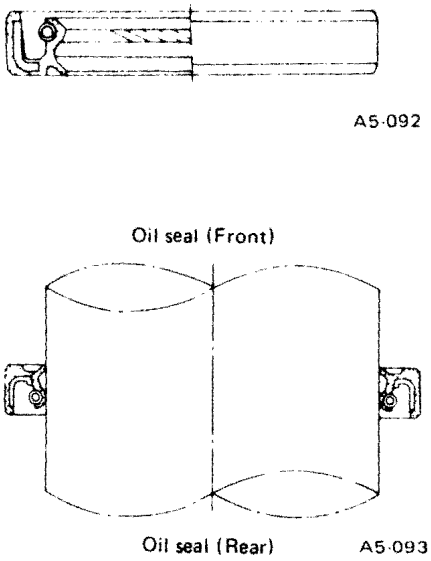

Fig. 3-120 Oil seal

NOTE:
The oil seal (Front) can be detached by separating the crankcase. Reinstallation is performed by using Oil Seal Installer (499067000).

18. Oil Pump

Wash the disassembled parts, check them for the following items, and repair or replace if defective.

1) Oil pump drive gear and rotor

a. Check the outside diameter of the shaft portion, and replace oil pump drive gear if worn or damaged considerably.

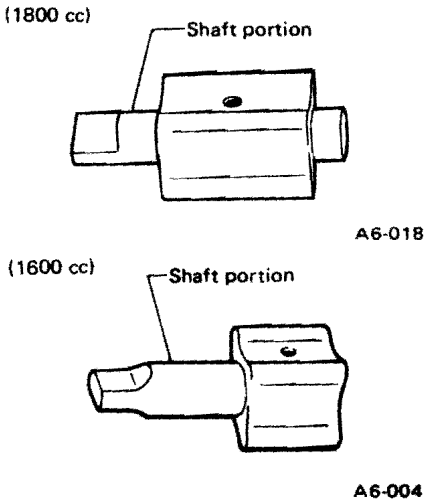

Fig. 3-121

Downloaded from www.Manualslib.com manuals search engine

b. Check both the gear and rotor and replace if worn or damaged considerably.

Outside diameter of drive gear	29.70 – 29.74 mm (1.1693 – 1.1709 in)
Outside diameter of rotor	40.53 – 40.56 mm (1.5957 – 1.5968 in)

c. Tip clearance between pump drive gear and pump rotor
Measure the tip clearance and replace both the drive gear and rotor as a set if the clearance exceeds the limit.

Drive gear-to-rotor tip clearance	Standard	0.02 – 0.12 mm (0.0008 – 0.0047 in)
	Limit	0.2 mm (0.008 in)

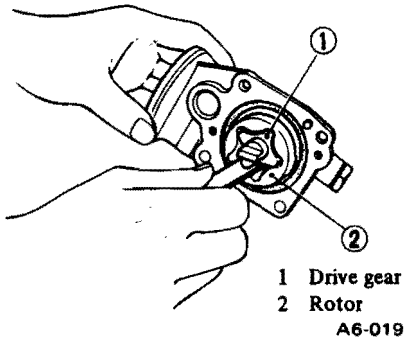

Fig. 3-122 Measuring drive gear-to-rotor clearance

d. Side clearance between pump case and pump rotor and between pump case and drive gear
Measure the side clearance and replace either the rotor or case as necessary if the clearance exceeds the limit.

Rotor-to-case and gear-to-case clearance	Standard	0.03 – 0.13 mm (0.0012 – 0.0051 in)
	Limit	0.2 mm (0.008 in)

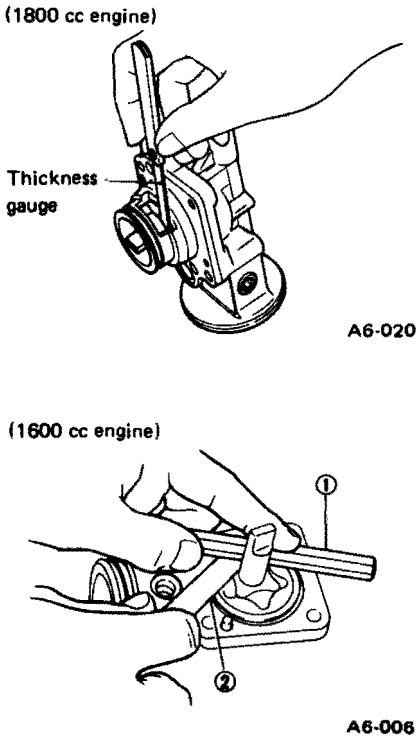

1 Straight edge
2 Thickness gauge

Fig. 3-123 Measuring rotor-to-case and gear-to-case clearance

e. Radial clearance between pump rotor and pump case
Replace either the rotor or case as necessary if the clearance exceeds the limit.

Rotor-to-case radial clearance	Standard	0.15 – 0.21 mm (0.0059 – 0.0083 in)
	Limit	0.25 mm (0.0098 in)

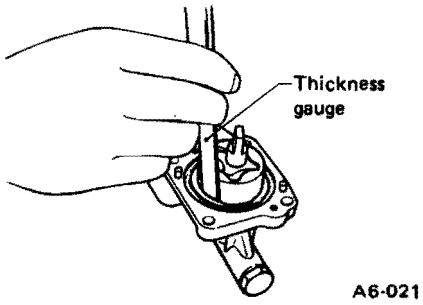

Fig. 3-124 Measuring rotor-to-case clearance

2) Oil relief valve and relief valve spring
Check the valve for fitting condition and damage, and the relief valve spring for damage and deterioration. Replace the parts if defective.

Relief valve spring	
Free length	47.1 mm (1.854 in)
Installed length	33.5 mm (1.319 in)
Load when installed	38.05 – 41.97 N (3.88 – 4.28 kg, 8.56 – 9.44 lb)

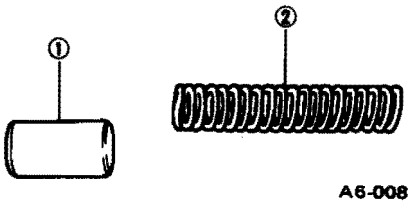

1 Oil relief valve
2 Relief valve spring

Fig. 3-125 Oil relief valve and spring

3) By-pass valve and spring
The checking method is as same as that of paragraph 2).

By-pass valve spring		
	1,800 cc	1,600 cc
Free length	37.1 mm (1.461 in)	40.7 mm (1.602 in)
Installed length	25.1 mm (0.988 in)	31.1 mm (1.224 in)
Load when installed	5.178 – 6.159 N (0.528 – 0.628 kg, 1.164 – 1.385 lb)	3.580 – 3.972 N (0.365 – 0.405 kg, 0.805 – 0.893 lb)

Downloaded from www.Manualslib.com manuals search engine

4) Oil pump holder
Check the pump shaft hole for wear, and other surfaces for damage.
5) Oil pump case
Check the oil pump case for clogged oil passage, worn rotor chamber, cracks, and other faults.

19. Water Pump

NOTE:
Clean all the disassembled parts thoroughly.

1) Inspect the pump shaft for wear, damage, and operation.

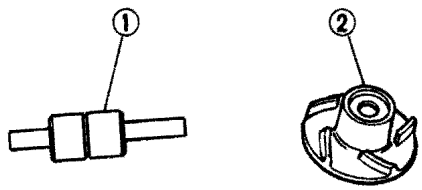

1 Water pump shaft
2 Water pump impeller

Fig. 3-126 Shaft and impeller

2) Inspect the impeller surface that contacts the mechanical seal for wear and damage.

3) Inspect the other parts for crack, wear and damage, and replace if defective.

20. Thermostat

Replace the thermostat if the valve does not close completely at an ambient temperature or if the following test shows unsatisfactory results.
Immerse the thermostat and a thermometer in water. Raise water temperature gradually, and measure the temperature and valve lift when the valve begins to open and when the valve is fully opened. During the test, agitate the water for even temperature distribution. The measurement should be to the specification.

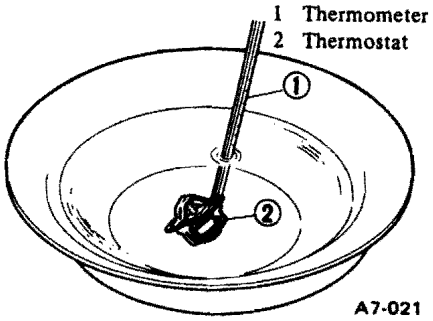

Fig. 3-127 Temperature test for thermostat

21. Thermo Valve

Connect vinyl tubes to output ports of thermo valve.
Soak the valve in cool water [approx. 10°C (50°F)] for some time, and then heat the water.
Blow air into the valve through one vinyl tube, and confirm that the valve opens or closes in response to the specified temperature. (Refer to page 3-5)

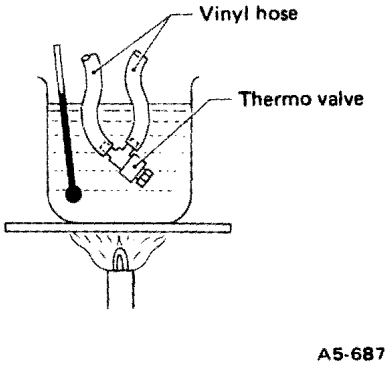

Fig. 3-128

3-8. Assembly

1. Precautions

1) All parts should be thoroughly cleaned, paying special attention to the engine oil passages, pistons and bearings.
2) Rotating parts and sliding parts such as piston, bearing and gear should be coated with oil prior to ASSY.
3) All removed parts, if to be reused, should be reinstalled in the original positions and directions.
4) Gaskets and lock washers must be replaced with new ones. Liquid gasket should be used where specified to prevent leakage.
5) Bolts, nuts and washers should be replaced with new ones as required.
6) Even if necessary inspections have been made in advance, proceed with ASSY work while making rechecks.

NOTE:
In the following procedures, items with ★ mark should be rechecked.

2. Intake Manifold Assembly

1) Hitachi Carburetor Type

1) Install thermostat and thermostat cover with new gasket.

NOTE:
Install it with the jiggle pin upward.

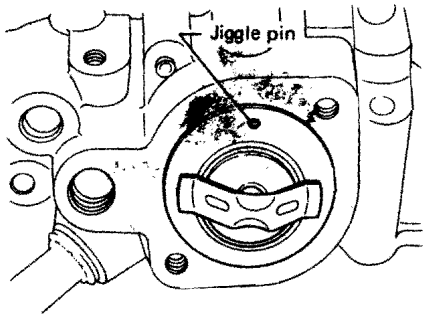

Fig. 3-129

2) Install the following parts.
a. Thermo vacuum valve II.

Torque	23 – 26 N·m (2.3 – 2.7 kg-m, 17 – 20 ft-lb)

Downloaded from www.Manualslib.com manuals search engine

NOTE:
a. Apply liquid gasket (Three Bond 1201 –P/N 004403008, or equivalent) on the thread.
b. Install thermo valve with its pipe outlet facing outside.

b. Stay & clip, clip and actuator ASSY (A/C only).
c. Solenoid valve I, bracket and protector stay.
d. Thermosensor.

NOTE:
Be careful not to bend the terminal.

e. Accelerator cable bracket.
f. P.C.V. valve.

Torque	23 – 26 N·m (2.3 – 2.7 kg-m, 17 – 20 ft-lb)

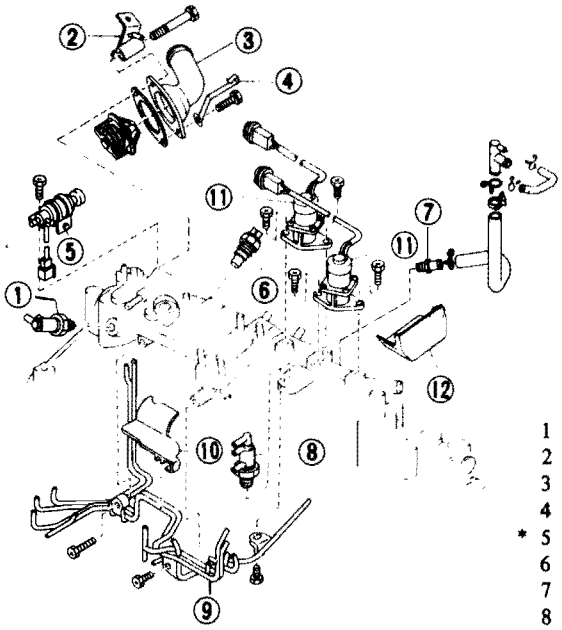

*: Except 49 states 4WD & 4WD-4WD-AT and Canada

1 Thermo vacuum valve II
2 Thermostat cover
3 Solenoid valve bracket
4 Protector stay
* 5 Solenoid valve I
6 Thermosensor
7 PCV valve
8 Thermo vacuum valve 1
9 Vacuum pipe CP
*10 Carburetor protector 3
*11 Duty solenoid valve
*12 Carburetor protector 2

A5-688

Fig. 3-130

3) Install carburetor with two gaskets and an insulator, and connect hoses.
4) Install E.G.R. valve with gasket and connector clamp, and connect hose.

NOTE:
Apply liquid gasket (Fuji Bond C or equivalent) on the thread.

g. Thermo vacuum valve I.

Torque	23 – 26 N·m (2.3 – 2.7 kg-m, 17 – 20 ft-lb)

NOTE:
Install thermo valve with its pipe outlet facing forward.

h. Vacuum pipe CP with carburetor protector 3, and vacuum hoses.
i. Control air cleaner, P.C.V. hose, duty solenoid valves, carburetor protector 2 and hoses.
j. Heater hose and purge hose.

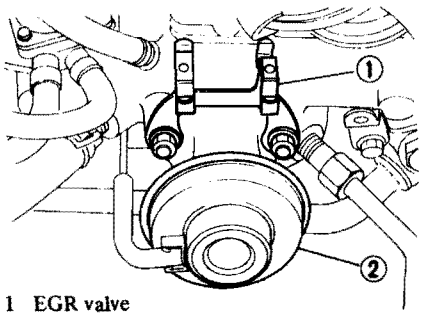

1 EGR valve
2 Connector clamp

A5-689

Fig. 3-131

5) Attach electric wiring harness, connect electric connectors, and then clip harness.

2) C-W Carburetor Type

1) Install thermostat and thermostat cover with new gasket.

NOTE:
Install it with the jiggle pin upward.

2) Install the following parts.
a. Stay & clip.
b. Clip.
c. Gasket, thermostat cover, solenoid valve I and bracket, and connect hose.
d. Thermosensor.

NOTE:
Be careful not to bend the terminal.

e. P.C.V. valve.

Torque	23 – 26 N·m (2.3 – 2.7 kg-m, 17 – 20 ft-lb)

NOTE:
Apply liquid gasket (Fuji Bond C or its equivalent) on the thread.

f. Thermo vacuum valve I.

Torque	23 – 26 N·m (2.3 – 2.7 kg-m, 17 – 20 ft-lb)

NOTE:
Install the valve with its pipe facing outside.

g. Vacuum pipe CP and vacuum hoses.

Downloaded from www.Manualslib.com manuals search engine

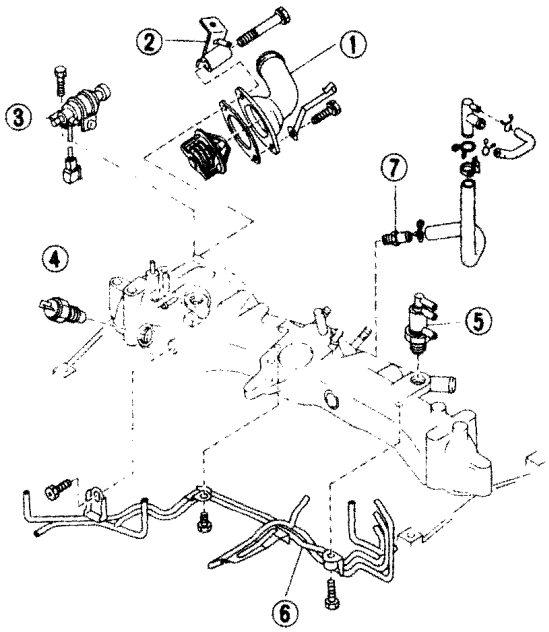

1 Thermostat cover
2 Solenoid valve bracket
3 Solenoid valve I
4 Thermosensor
5 Thermo vacuum valve 1
6 Vacuum pipe CP
7 PCV valve

A5-690

Fig. 3-132

3) Install carburetor with two gaskets and an insulator, and connect hoses.
4) Install the following parts.
a. E.G.R valve with gasket, and hose.
b. Heater hose.
c. P.C.V. hose ASSY.
d. (A/C only) FICD actuator and hose.

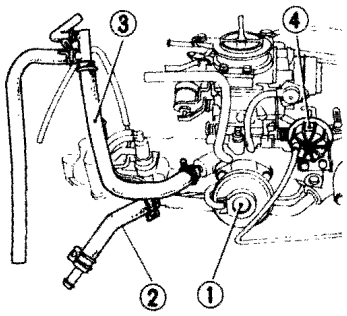

1 Heater hose
2 EGR valve
3 PCV hose ASSY
4 Actuator (A/C only)

A5-691

Fig. 3-133

5) Attach electric wiring harness, connect electric connectors, and then clip harness.

3. Valve Rocker Assembly

NOTE:

a. Pay special attention to the direction of the rocker shaft, the position of the spring washers, the number of plain washers, the difference between the rocker arms, and the marks on the spacer.

b. Before assembling, apply a generous amount of oil to the sliding surface of each part.

Valve rocker assembly		
	1,800 cc	1,600 cc
ℓ_1	180.6 mm (7.11 in)	176.9 mm (6.96 in)
ℓ_2	35.8 mm (1.409 in)	34.2 mm (1.346 in)
ℓ_3	34.8 mm (1.370 in)	33.2 mm (1.307 in)
Mark on spacer (RH)	$\overline{\underline{RH}}$	RH
Mark on spacer (LH)	$\overline{\underline{LL}}$	LH

Downloaded from www.Manualslib.com manuals search engine

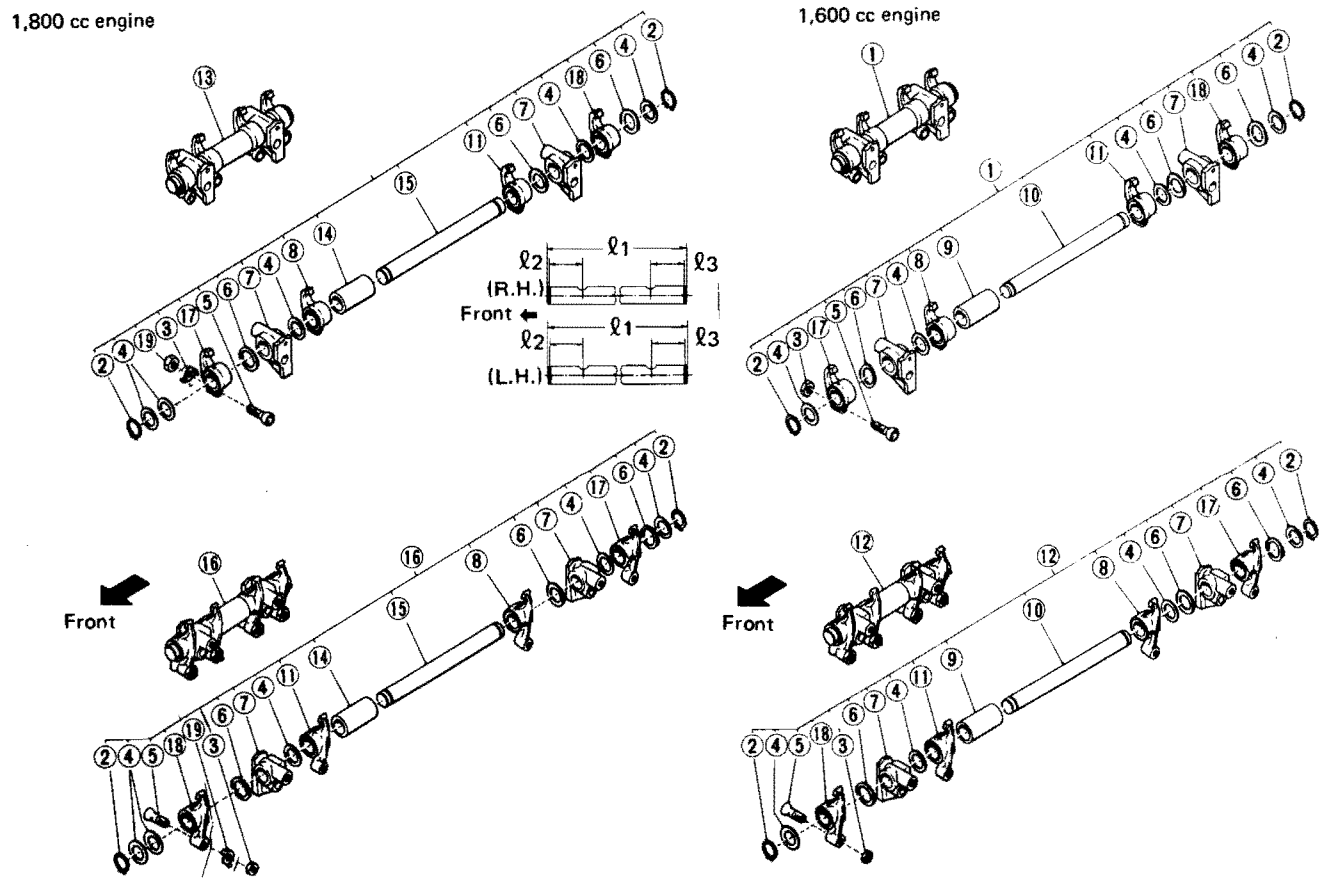

1 Valve rokcer ASSY (R.H.)
2 Snap ring
3 Nut
4 Washer
5 Valve rocker screw
6 Rocker shaft spring washer
7 Rocker shaft supporter
8 Valve rocker arm CP
9 Rocker shaft spacer
10 Valve rocker shaft
11 Valve rocker arm CP 2
12 Valve rocker ASSY (L.H.)
13 Valve rocker ASSY (R.H.)
14 Rocker shaft spacer
15 Valve rocker shaft
16 Valve rocker
17 Valve rocker arm
18 Valve rocker arm 2
19 Lock washer (only for hydraulic valve lifter)

Fig. 3-134 Assembling valve rocker parts

4. Cylinder Head

1) Press oil seal onto intake valve guide. Refer to 3–7, 4.

NOTE:
Apply oil to the oil seal prior to pressing.

2) Apply oil to stems of intake and exhaust valves prior to installation.
3) Install intake and exhaust valves with inner and outer valve springs, valve spring retainers and retainer keys on cylinder head by using Valve Spring Press (899724100).

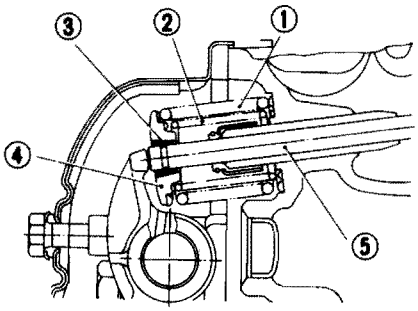

1 Outer valve spring
2 Inner valve spring
3 Retainer key
4 Valve spring retainer
5 Valve stem

Fig. 3-135 Installing valve and related parts

NOTE:
a. Take care not to damage the lips of the intake valve oil seals when installing the intake valves.
b. Place the inner and outer valve springs with the paint mark toward the valve spring retainer, or with the close coil side toward the cylinder head.
c. After installing all the parts, tap the spring top lightly with a plastic hammer or the like to give better seating of the valve.

Downloaded from www.Manualslib.com manuals search engine

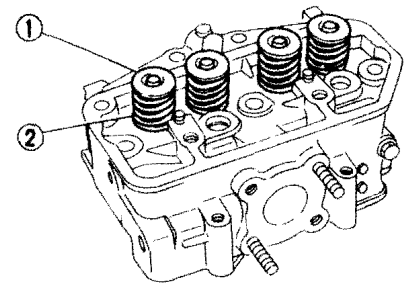

1 Valve spring retainer
2 Close coil side

A5-325

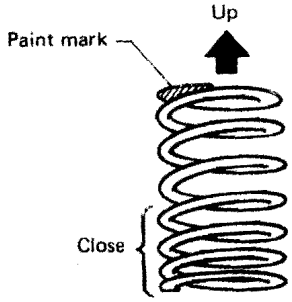

A5-326

Fig. 3-136 Installed direction of valve spring

4) Install spacer with gasket for air injection system.

Discrimination mark on spacer		
* For right-hand side (#1 & #3) cylinder head	1600 Engine	7
	1800 Engine	8
For left-hand side (#2 & #4) cylinder head		LH

* Only for 49 States (except 4WD & 4WD-AT)

5. Crankshaft

1) Install connecting rod bearings on connecting rods and connecting rod caps.

NOTE:
Apply oil to the surfaces of the connecting rod bearings.

2) Install connecting rods and connecting rod caps on crankshaft with connecting rod bolts and nuts.

Torque (Connecting rod nut)	39 – 42 N·m (4.0 – 4.3 kg-m, 29 – 31 ft-lb) with oil on threads

NOTE:
a. Position each connecting rod with the side marked ❼ facing forward.
b. Each connecting rod has its own mating cap. Make sure that they are assembled correctly by checking their matching number.
c. When tightening the connecting rod nuts, apply oil on the threads.

★ Side clearance and oil clearance (Refer to 3–7, 14.)

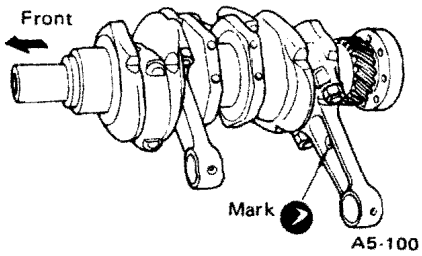

A5-100

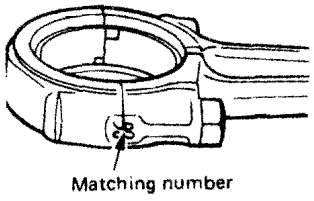

A5-101

Fig. 3-137 Installing connecting rods

6. Camshaft

Install woodruff key on camshaft. Place camshaft plate in position and install cam gear by using Remover Set (899714110).

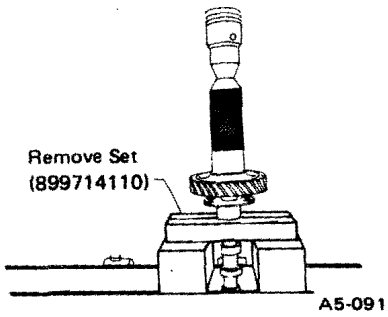

A5-091

Fig. 3-138 Installing cam gear

NOTE:
a. Pay attention to the assembling direction of camshaft plate and cam gear.

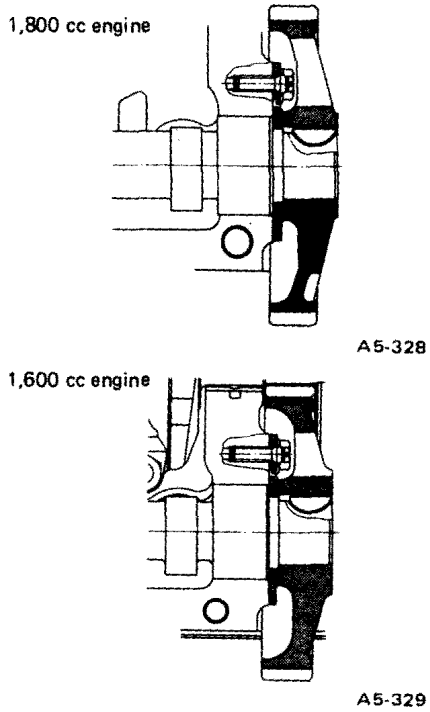

A5-328

A5-329

Fig. 3-139 Camshaft plate and cam gear

b. Place the camshaft journal on Remover Set (899714110) when pressing the cam gear.

★ Thrust clearance (Refer to 3–7, 16.)

7. Piston

1) Install piston rings on pistons as follows.

Install oil ring spacer, upper rail and lower rail in this order by hand. Then install second ring and top ring with a piston ring expander.

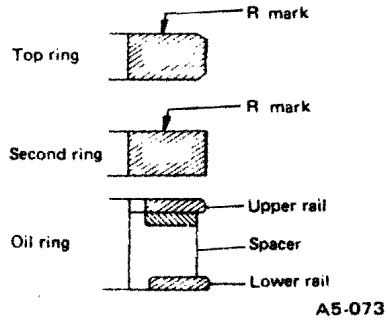

A5-073

Fig. 3-140 Cross section of piston rings (Riken Piston Ring)

Downloaded from www.Manualslib.com manuals search engine

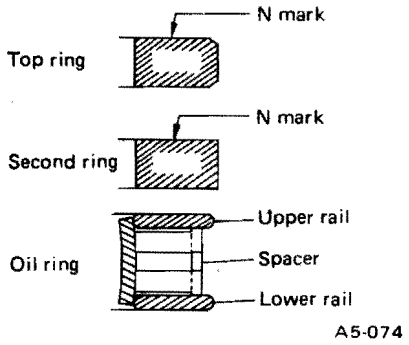

Fig. 3-141 Cross section of piston rings (Nippon Piston Ring)

NOTE:

a. Position the gaps of the piston rings.

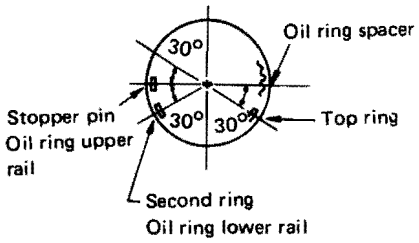

Fig. 3-142 Piston ring gap position

b. Install oil ring as shown in the figure.

(Riken Piston Ring)

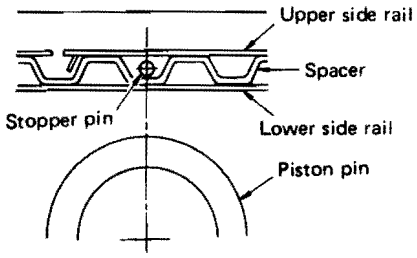

(Nippon Piston Ring)

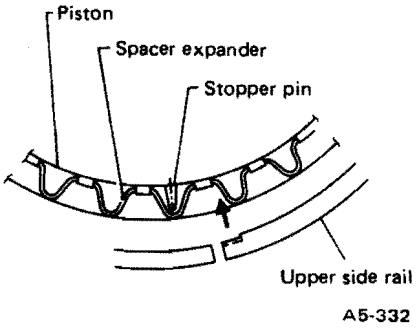

Fig. 3-143 Installation of oil ring

c. Position stopper pins.

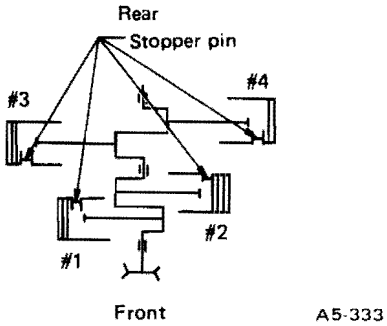

Fig. 3-144 Stopper pin position

d. The top and second rings are provided with "R" or "N" mark as shown in Figs. 5-84 and 5-85. Be sure to install the rings with this mark facing upward.

★ Ring to groove clearance (Refer to 3–7, 13.)

2) Insert piston pin circlip into the stopper pin side of the piston.

NOTE:

a. The installed circlip should be directed as shown in the figure.

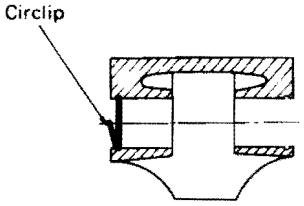

Fig. 3-145 Installed direction of circlip

b. If the piston pin hole has burrs made by the circlip end during its removal, correct so that the piston pin can be inserted smoothly into the piston pin hole with fingers.

8. Oil Pump

NOTE:

Replace washers and O-rings with new ones.

1) Assemble oil relief valve, spring, two washers and plug in pump body.

2) Assemble ball, by-pass valve spring and O-ring in pump body.

3) Assemble oil pump rotor, drive gear, O-ring and pump body holder in pump body.

4) Install oil filter.

9. Water Pump

NOTE:

a. Replace the mechanical seal with a new one.

b. Apply liquid gasket where required.

1) Install the water pump shaft into pump body with a press.

NOTE:

a. Before pressing, heat the pump body to 80 to 100°C (176 to 212°F).

b. Do not press the shaft, or the bearings will be damaged. Press the bearing outer race.

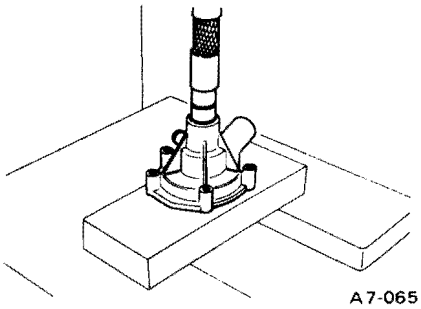

Fig. 3-146 Pressing water pump shaft

2) Apply liquid gasket (Fuji Bond D or equivalent) to the periphery of the mechanical seal and press the seal into the pump body with the carbon washer of the seal facing the impeller.

3) With a thin coat of oil on the shaft surface, install the impeller onto the pump shaft with a press.

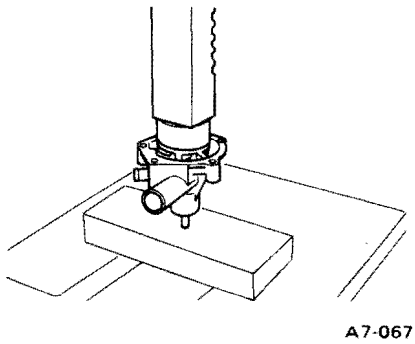

Fig. 3-147 Installing impeller

Downloaded from www.Manualslib.com manuals search engine

NOTE:
Apply coolant on the sliding surface between mechanical seal and impeller.

Check for the following clearance after installation and correct if defective.

Clearance between impeller and pump body	0.5 – 0.7 mm (0.020 – 0.028 in)

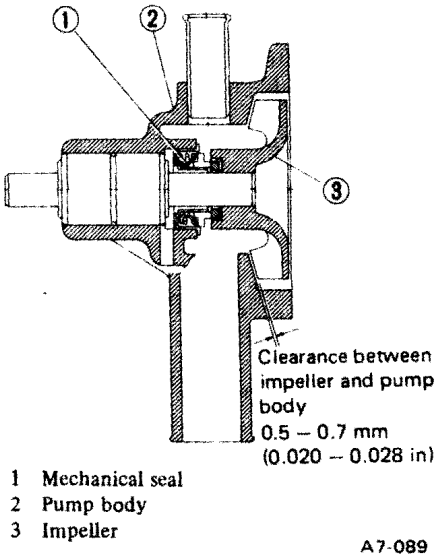

Fig. 3-148 Impeller clearances

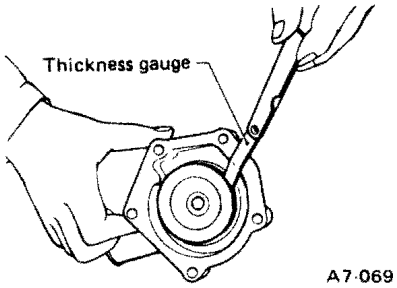

Fig. 3-149 Checking impeller-to-pump body clearance

4) Support the impeller side of the pump shaft end and install the pulley by using a press until the distance "L" between the pump body surface, which mates with the gasket, and the center of belt groove of the pulley becomes specified value.

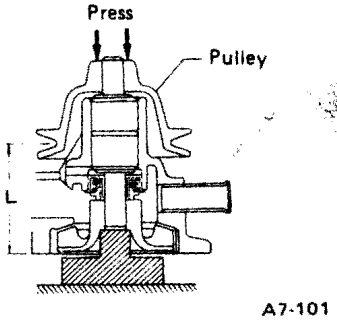

Fig. 3-150

L	
1800 cc Engine	1600 cc Engine
61.1 – 61.7 mm (2.406 – 2.429 in)	64.1 – 64.7 mm (2.524 – 2.547 in)

NOTE:
Before pressing, apply oil on the pump shaft.

3-9. Installation

1. Precautions

1) All parts should be thoroughly cleaned, paying special attention to the engine oil passages, pistons, cylinders and bearings.
2) Rotating parts and sliding parts such as the piston, cylinder, bearing and gear should be coated with oil prior to reinstallation.
3) All removed parts, if to be reused, should be reinstalled in the original positions and directions.
4) Oil seal lips should be coated with grease before reinstallation.
5) Gaskets and lock washers must be replaced with new ones. Liquid gasket should be used where specified to prevent leakage.
6) Bolts, nuts, washers, and cotter pins should be replaced with new ones as required.
7) Even if necessary inspections have been made in advance, proceed with reinstallation work while making rechecks.
8) If one or both of the cylinder heads are removed in engine disassembly, perform the retightening of the cylinder head nuts and intake manifold bolts and the adjustment of the valve clearances (except engine with hydraulic valve lifter) as instructed in 2-2 in CHAPTER 2 after the engine has been assembled, mounted on the car, run for about 10 minutes, and cooled down to ambient temperature.

NOTE:
In the following procedures, items with ★ mark should be rechecked.

1) Install Engine Stand (399814300) to each crankcase half.

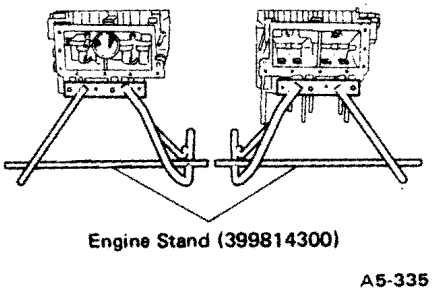

Fig. 3-151 Installing engine stand

Downloaded from www.Manualslib.com manuals search engine

2) Install oil pressure switch (Vehicle without pressure gauge) or plug (Vehicle with pressure gauge) on crankcase. Before installation, apply liquid gasket (Fuji Bond C or equivalent) to the threads of pressure switch body or plug body.

Torque	22 – 27 N·m (2.2 – 2.8 kg-m, 16 – 20 ft-lb)

3) Install crankshaft bearings on crankcase.

★ Oil passage.

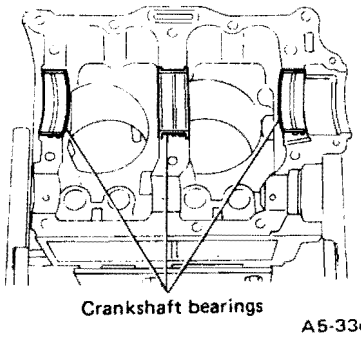

Fig. 3-152 Installing crankshaft bearings

4) Insert valve lifters into the lifter holes in crankcase and hold them on #1 and #3 cylinder side by using Valve Lifter Clip 899804100 (only for hydraulic valve lifter).

NOTE:
Apply oil to the valve lifters before installation.

5) Install crankshaft and camshaft on the crankcase half having #2 and #4 cylinders.

NOTE:
a. Apply oil to the camshaft and crankshaft bearings before installation.
b. One of the bolt holes in the crankshaft gear has a larger chamfer than others. Install the crankshaft so that the punch mark on the cam gear can be seen through this bolt hole in the crankshaft gear.
c. Whenever the camshaft is replaced because of its abnormality, replace the valve lifters with new ones too.

★ Oil clearance of crankshaft (Refer to 3–7, 15.)

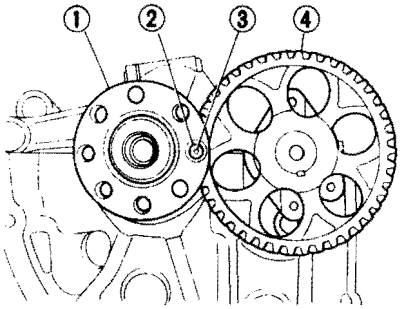

1 Crankshaft gear
2 Large chamfer
3 Punch
4 Camshaft gear

Fig. 3-153 Aligning crankshaft and camshaft gears

6) Install O-ring and backup ring on the crankcase half having #2 and #4 cylinders.

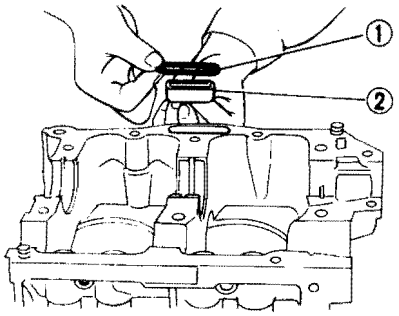

1 O-ring
2 Backup ring

Fig. 3-154 Installing O-ring and backup ring

7) Apply liquid gasket (Fuji Bond C or equivalent) on the mating surface of crankcase.

NOTE:
Before applying liquid gasket, clean the mating surfaces of the crankcase so that they are free of oil, grease and dust by using thinner or the like.

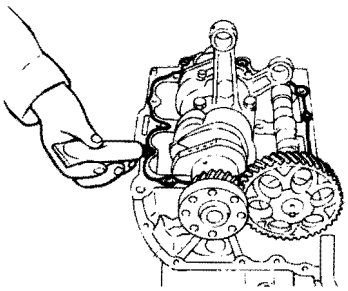

Fig. 3-155 Applying liquid gasket

8) Put Valve Lifter Clips (899804100) between valve lifters in the crankcase half having the #1 and #3 cylinders, to prevent lifters from dropping off (for solid valve lifter).

9) Bring together the crankcase halves and tighten the crankcase bolts and nut with a plain washer to the specified torques and in the specified sequence.

Torque for crankcase bolts and nut	
Thread size	Torque
10 mm 6	39 – 47 N·m (4.0 – 4.8 kg-m, 29 – 35 ft-lb)
8 mm 2	23 – 26 N·m (2.3 – 2.7 kg-m, 17 – 20 ft-lb)
6 mm 2	4.4 – 5.4 N·m (0.45 – 0.55 kg-m, 3.3 – 4.0 ft-lb)

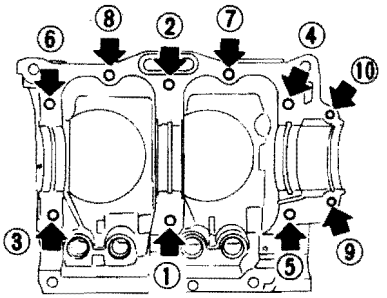

Fig. 3-156 Tightening sequence for crankcase bolts and nut

NOTE:
a. Install the front hanger at this time.
b. Pull cam gear fully.
c. Make sure that the O-ring is installed exactly.
d. Install stiffener (4WD) at this time temporarily.
e. Take out Valve Lifter Clips (only for solid valve lifter).

10) Secure camshaft plate on crankcase with the two bolts and lock washers, working through the hole in cam gear.

NOTE:
Bend the lock washers to securely lock the bolts.

Downloaded from www.Manualslib.com manuals search engine

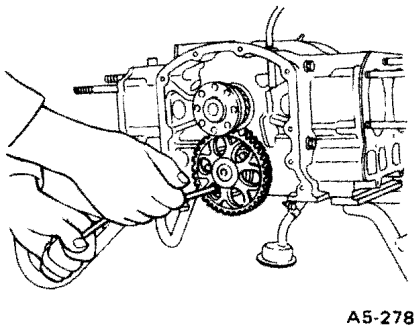

Fig. 3-157 Installing camshaft plate

★ Backlash of cam gear (Refer to 3–7, 16.)
★ Thrust clearance of crankshaft (Refer to 3–7, 15.)

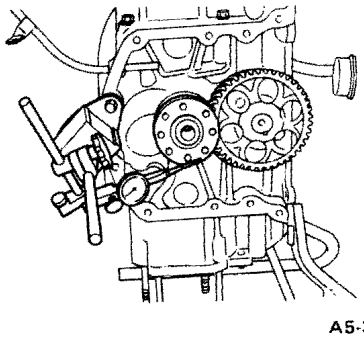

Fig. 3-158 Checking crankshaft thrust clearance

NOTE:
When measuring the backlash of cam gear and thrust clearance of crankshaft, use an appropriate plate as an attachment.

11) Install pistons in cylinder as follows.
a. Apply oil to the circumference of piston and the inner surface of cylinder.
b. With the #2 and #4 cylinders facing downwards, turn crankshaft until the #2 connecting rod comes to the bottom dead center. Then insert the #2 piston into cylinder by using Piston Guide (398744300).

NOTE:
If any of the pistons are reused, be sure to direct them in the same way as before they were disassembled.

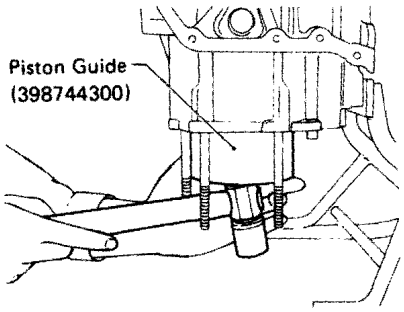

Fig. 3-159 Installing piston

c. Install piston pin and circlip through the front service hole after aligning the service hole, piston pin hole, and connecting rod small end with Piston Pin Guide (399284300).

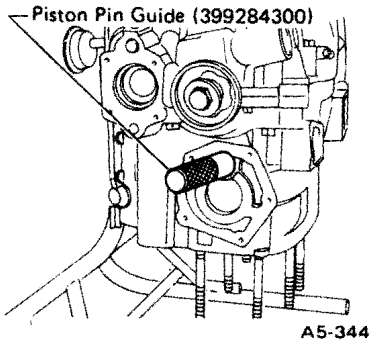

Fig. 3-160 Inserting piston pin

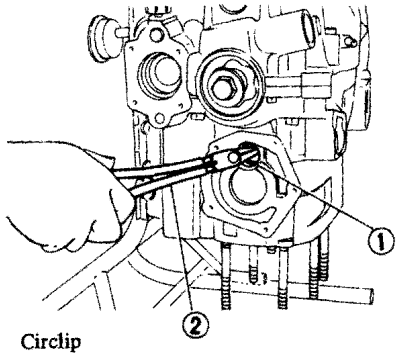

1 Circlip
2 Long nose pliers

Fig. 3-161 Installing circlip

d. Install #4 piston, piston pin, circlip into cylinder in the same manner, but carry out this job from the flywheel housing side.
e. Turn the crankcase upside down so that #1 and #3 cylinder face downward and perform the same job as described in a) to b).

12) Bring crankcase to horizontal position and check whether piston pins are correctly installed or not by turning crankshaft and watching piston movement.

13) Apply liquid gasket (Fuji Bond C or equivalent) on crankcase plugs and tighten them with aluminum gasket.

Torque (Crankcase plug)	62 – 76 N·m (6.3 – 7.7 kg-m, 46 – 56 ft-lb)

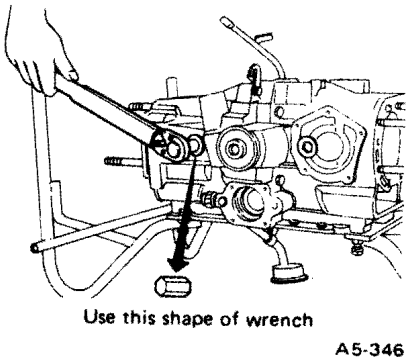

Fig. 3-162 Installing crankcase plugs

14) If oil strainer has been removed, install it with a new O-ring by driving with an aluminum bar.

15) Install oil strainer stay with 8 mm bolt, nut and spring washer.

Torque (Oil strainer stay)	23 – 26 N·m (2.3 – 2.7 kg-m, 17 – 20 ft-lb)

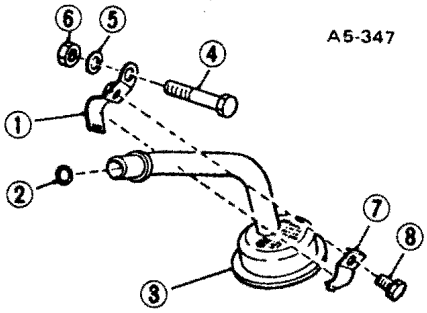

1 Oil strainer stay
2 O-ring
3 Oil strainer
4 Bolt
5 Spring washer
6 Nut
7 Oil strainer stay 2
8 Bolt and washer

Fig. 3-163 Installing oil strainer stay

Downloaded from www.Manualslib.com manuals search engine

16) Install a new cylinder head gasket, #2 – #4 cylinder head, valve push rods and also valve rocker as follows.

a. Install a new cylinder head gasket.

NOTE:

a. Before installing the cylinder head gasket, clean the mating surfaces of the cylinder head and crankcase so that they are free of oil, grease and dust by using thinner or the like.

b. Apply head gasket sealant THREE BOND 1201 (004403008) or DOW CORNING #92–024 evenly to both sides of the new cylinder head gasket with a brush. Do not apply excessive sealant. Install the gasket on to the crankcase quickly after applying sealant.

b. Install #2 – #4 cylinder head.

NOTE:

The cylinder head installing direction is as in the figure.

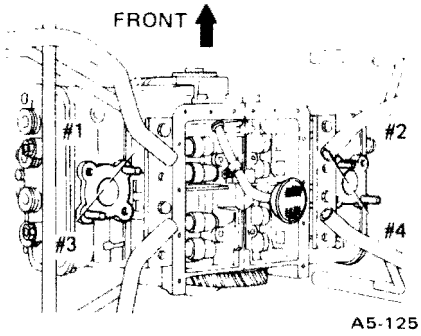

Fig. 3-164 Installed position of cylinder heads

c. Take out Valve Lifter Clip 899804100 (for hydraulic valve lifter), and insert valve push rods in alignment with valve lifters.

NOTE:

Do not misuse the push rod.

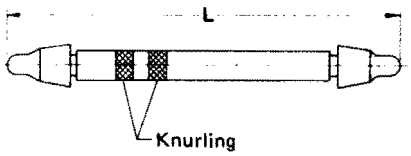

Fig. 3-165 Discrimination of push rod

Number of Knurlings	
1600	2
1800 with solid valve lifter	1
1800 with hydraulic valve lifter	Nothing

d. Install valve rocker.

When tightening nuts and bolts, apply oil to the threads and tighten them in two or three successive steps until the final tightening is at the specified torque.

In each step, tighten them in the specified sequence.

1st step	29 N·m (3.0 kg-m, 22 ft-lb)
2nd step	59 N·m (6.0 kg-m, 43 ft-lb)
3rd (final) step	64 N·m (6.5 kg-m, 47 ft-lb)

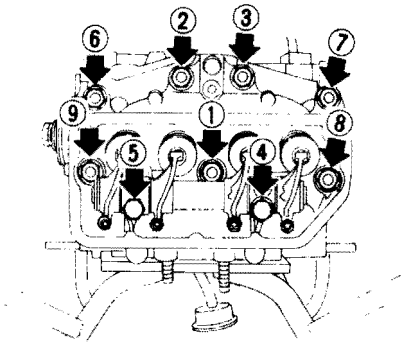

Fig. 3-166

NOTE:

a. When tightening ①, ⑨ nuts, use Socket Wrench (499987006).

b. After tightening all the cylinder head nuts and bolts, retighten the center nut ① to insure it is correctly torqued.

c. Do not use washers in installing valve rocker.

d. Make sure that the valve rocker is correctly assembled.

17) Install #1 – #3 cylinder head with a new gasket and push rods and valve rocker assembly (RH) in the same way as instructed in 16).

18) Press oil seal (Rear) into the flywheel housing if oil seal has been removed.

NOTE:

a. Apply oil on the circumference of the oil seal prior to pressing.

b. Oil seal dimensions.

1,800 cc .... 76 x 93 x 10 mm (2.99 x 3.66 x 0.39 in)
1,600 cc .... 70 x 87 x 8.5 mm (2.76 x 3.43 x 0.335 in)

19) Install flywheel housing to crankcase with the mating surface coated with liquid gasket [THREE BOND 1215 (P/N 004403007) or equivalent].

Torque	20 – 27 N·m (2.0 – 2.8 kg-m, 14 – 20 ft-lb)

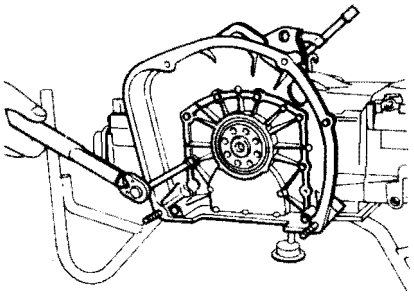

Fig. 3-167 Installing flywheel housing

NOTE:

a. Clean the mating surfaces of the flywheel housing and crankcase so that they are free of oil, grease and dust by using thinner or the like before applying liquid gasket.

b. Be careful not to damage the oil seal lip and not to detach the spring when installing the flywheel housing.

Downloaded from www.Manualslib.com manuals search engine

c. When using THREE BOND 1215, dry the coated surface for 5 to 10 minutes before installation.

d. Remove Valve Lifter Clips (899804100) before installing oil pan.

20) Install crankcase oil pan, oil pan gasket and transmission cover II (MT).

Torque (Oil pan)	4.4 – 5.4 N·m (0.45 – 0.55 kg-m, 3.3 – 4.0 ft-lb)

(SUBARU 1600)

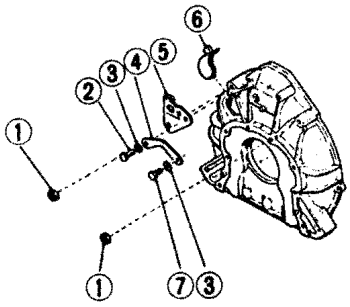

(SUBARU 1800)

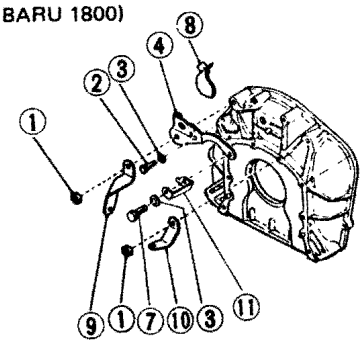

Fig. 3-169 Installing crankcase hanger

22) Install flywheel with O-ring (MT) or converter drive plate with back plate and O-ring (AT) on the crankshaft gear.

Apply liquid gasket [THREE BOND 1215 (P/N 004403007)] to the threads of the bolts.

	AT	MT
Torque	49 – 53 N·m (5.0 – 5.4 kg-m, 36 – 39 ft-lb)	41 – 45 N·m (4.2 – 4.6 kg-m, 30 – 33 ft-lb)

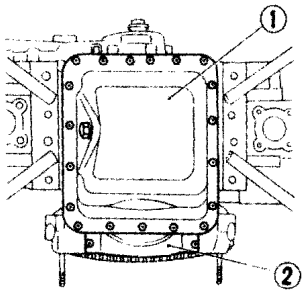

1 Transmission cover II (MT)
2 Oil pan

A5-271

Fig. 3-168 Installing oil pan

21) Install pitching stopper bracket and crankcase rear hanger, if it has been removed, to flywheel housing. On C-W carburetor, install accelerator cable bracket with hanger.

NOTE:
Do not misplace the washer.

1 Nut
2 Bolt
3 Spring washer
4 Crankcase rear hanger
5 Pitching stopper bracket
6 Timing hole hanger
7 Bolt
8 Timing hole hanger
9 Stiffener RH (4WD)
10 Stiffener LH (4WD)
11 Accelerator cable bracket (C-W carburetor)

A5-693

NOTE:

a. The flywheel or drive plate and back plate can be installed only in one position since not all the bolt holes are positioned at equal intervals.

b. When installing back plate, align the mark on back plate and the hole in drive plate. (AT)

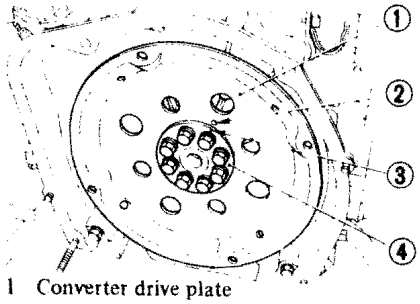

1 Converter drive plate
2 Hole
3 Mark
4 Back plate

A5-353

Fig. 3-170 Installing drive plate and back plate (AT)

c. When using THREE BOND 1215, dry the bolts coated with it for 5 to 10 minutes before screwing them in.

23) Install clutch disc and clutch cover with bolts and spring washers, aligning clutch disc with flywheel by inserting Clutch Disc Guide (499747000) into needle bearing fitted in flywheel. (MT)

Torque (Clutch cover)	16 N·m (1.6 kg-m, 12 ft-lb)

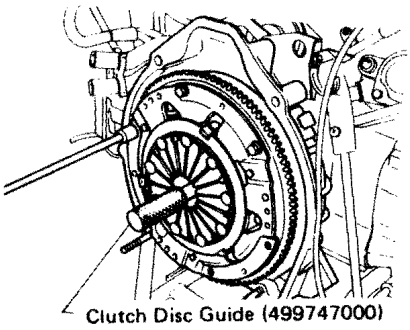

A5-354

Fig. 3-171 Installing clutch cover

NOTE:
Position the clutch cover so that the "0" marks on the flywheel and clutch cover are spaced 120° or more.

24) Install water pump, hose, pipe compl. and heater hose as an assembly and install another hose.

Downloaded from www.Manualslib.com manuals search engine

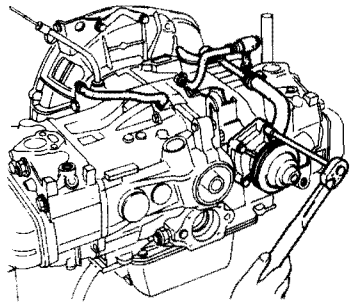

Fig. 3-172 Installing water pump

25) After assembling oil filter and oil pump, install it with O-ring and oil pump gasket.

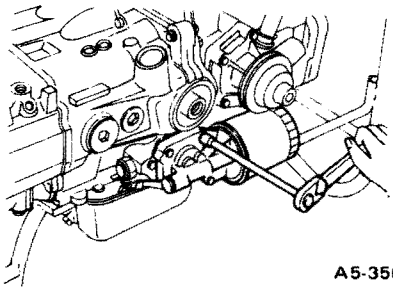

Fig. 3-173 Installing oil pump

NOTE:

a. Use new gaskets and O-rings.

b. When installing, align the rotor shaft with the groove in the camshaft end.

26) Install oil seal (Front) on the crankshaft front end by using Oil Seal Installer (499067000).

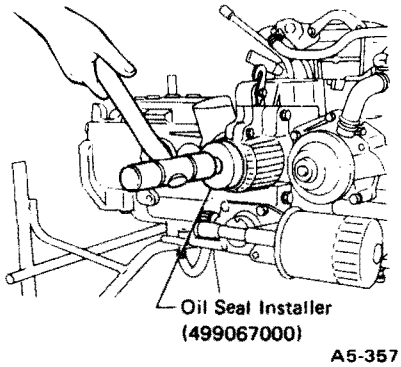

Fig. 3-174 Installing oil seal

27) Install crankshaft pulley on crankshaft with flange bolt.

Torque	64 – 74 N·m (6.5 – 7.5 kg-m, 47 – 54 ft-lb)

NOTE:

a. When tightening the bolt, insert a screw driver through the timing hole into the hole in the drive plate (AT) or flywheel (MT) to prevent the crankshaft from turning.

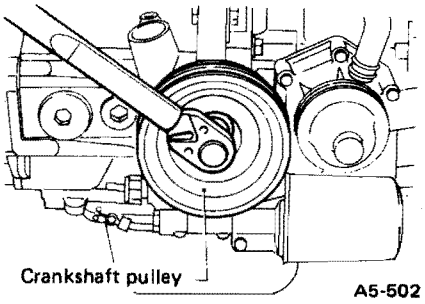

Fig. 3-175 Installing crankshaft pulley

b. Apply engine oil on the thread, and liquid gasket (THREE BOND 1215 or the equivalent) on the flange seat.

c. Pulley dia. is as follows.
1600 cc: 109 mm (4.29 in)
1800 cc: 119 mm (4.69 in)

28) Install oil filler duct, oil filler duct stay and gasket on crankcase. On 4WD, install oil filler duct, stiffener 2, and gasket on crankcase.

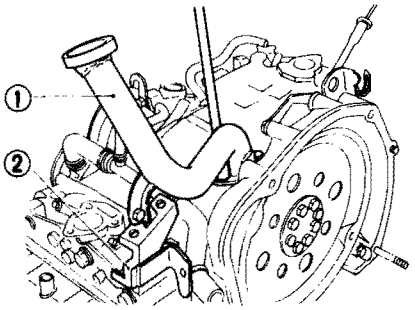

1 Oil filler duct
2 Oil filler duct stay

Fig. 3-176 Installing oil filler duct

29) Install generator bracket compl., bracket 2 and bracket 3 as follows.

a. Temporarily connect bracket compl. ① and bracket 3, ② until the spring washer is deformed a little.

b. Install the sub-assembled bracket prepared in a onto the engine by tightening bolts ③ ④ temporarily.

c. At first tighten fully the two bolts ③ and after that tighten the bolt ④ to the specified torque.

d. Tighten fully the two bolts ⑤ to the specified torque.

e. After loosening the bolt ④ by two turns or more, tighten it again to the specified torque.

f. Temporarily install bracket 2.⑥ .

Torque	13 – 19 N·m (1.3 – 1.9 kg-m, 9 – 14 ft-lb)

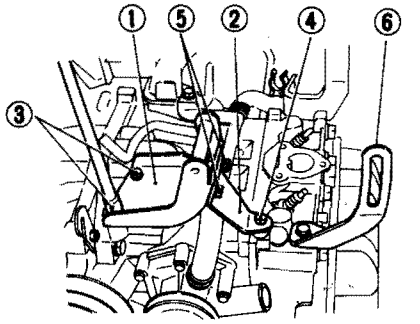

1 Bracket CP
2 Bracket 3
3 Bolts
4 Bolt
5 Bolts
6 Bracket 2

Fig. 3-177 Installing generator brackets

NOTE:

Be sure to use the ⑨ bolt for the generator bracket 2.
Others are ⑦ ones.

30) (Except engine with hydraulic valve lifter) Adjust the valve clearances as described in 2-2 Procedures of maintenance services in Chapter 2.

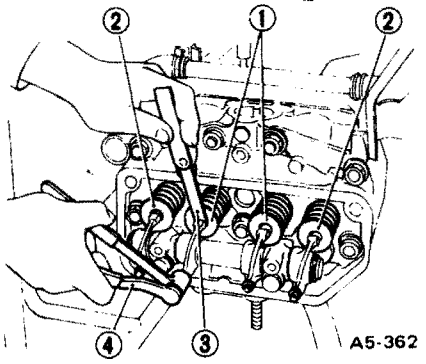

1 Exhaust valves
2 Intake valves
3 Thickness gauge
4 Valve Clearance Adjuster (498767000)

Fig. 3-178 Adjusting valve clearance

Valve clearance (Cold)	
Intake	0.23 – 0.27 mm (0.009 – 0.011 in)
Exhaust	0.33 – 0.37 mm (0.013 – 0.015 in)

Downloaded from www.Manualslib.com manuals search engine

NOTE:
Use T.D.C. marking on pulley.

31) Install valve rocker covers with valve rocker cover gaskets, seal washers and bolts.

Torque	2.9 – 3.9 N·m (0.30 – 0.40 kg-m, 2.2 – 2.9 ft-lb)

32) Install spark plugs with gaskets.

Torque	18 – 24 N·m (1.8 – 2.4 kg-m, 13 – 17 ft-lb)

33) Install the intake manifold assembly prepared before as follows.
a. Install the intake manifold assembly with intake manifold gasket, air cleaner bracket, fuel hose stay, and EGR pipe. And connect water by-pass hoses.

Torque	18 – 22 N·m (1.8 – 2.2 kg-m, 13 – 16 ft-lb)

NOTE:
Discrimination knurling for E.G.R. pipe.

Vehicle	Knurling
1600 cc	2
C-W carburetor type	3
Except the above	Nothing

b. Connect the harness lead to oil pressure gauge or oil pressure switch, and clip it.
c. Connect the P.C.V. hose to rocker cover and clip it at the upper portion.

NOTE:
a. For further particulars of vacuum hose, wiring harness, water hose and P.C.V. hose, refer to label behined engine hood, 15–12 in chapter 15 and Parts Catalogue.
b. Be sure to connect E.C.M. (Electronic Control Module) earth at right front bolt.

34) Tighten E.G.R. pipe.
35) Install battery cable bracket and A.S.V. bracket [vehicle without power steering for 49 States (except 4WD & 4WD-AT)] or oil pump bracket (vehicle with power steering).

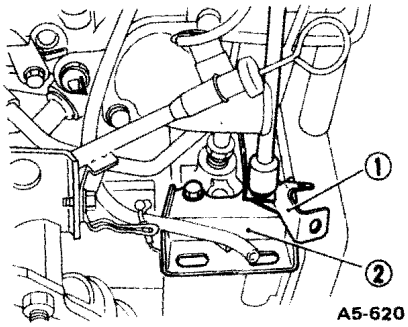

1 Battery cable bracket
2 A.S.V. bracket

Fig. 3-179

36) Install A.S.V. pipe and A.S.V.

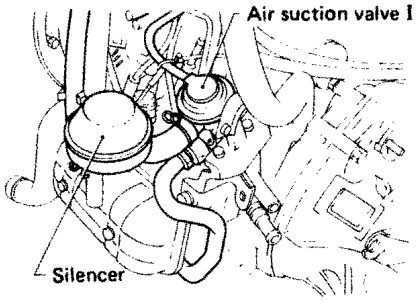

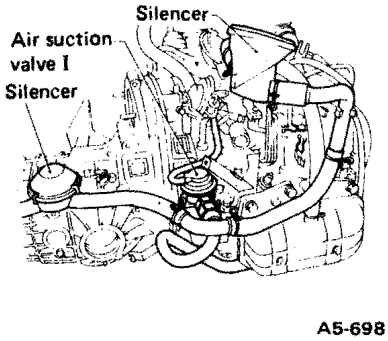

Fig. 3-180

37) Install E.G.R. pipe cover.

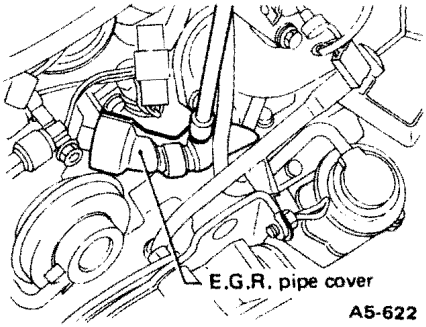

Fig. 3-181

38) Install alternator on the generator brackets with air cleaner bracket, spark plug cord stay and drive belt.

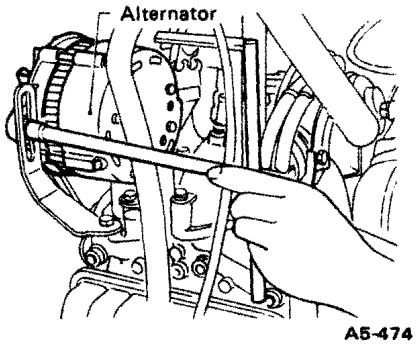

Fig. 3-182 Installing alternator with relative parts

NOTE:
a. After aligning the air cleaner bracket and air cleaner, secure the bracket.
b. Do not forget tightening fully the bolt for generator bracket 2.
c. Adjust the drive belt tension as described in 2-2 Procedures of maintenance services in Chapter 2.

Drive belt tension
13 – 14 mm (0.51 – 0.55 in)/ 98 N (10 kg, 22 lb)

When replacing with new one, the tension is 10 mm (0.39 in)/98 N (10 kg, 22 lb).

Downloaded from www.Manualslib.com manuals search engine

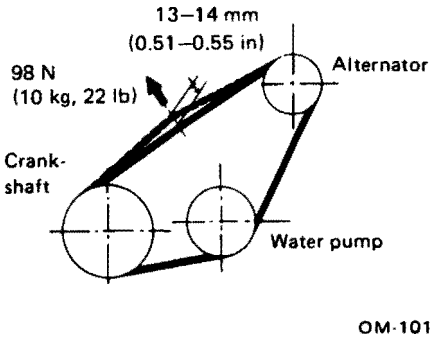

Fig. 3-183 Drive belt tension

39) Install distributor as follows.

a. Set #1 piston at its top dead center in the compression stroke.

b. Align the distributor matching marks.

c. Install distributor plate on crankcase with bolt.

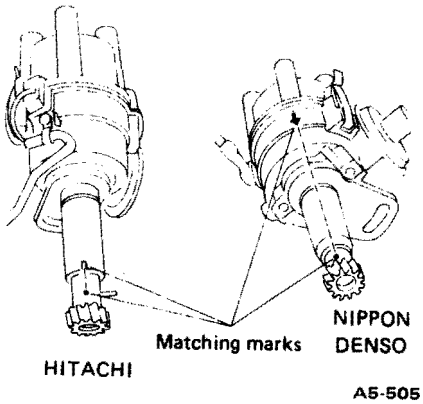

Fig. 3-184 Aligning distributor matching marks

d. Apply oil to the circumference of distributor shaft and gear.

e. Install distributor into crankcase taking care not to damage distributor gear and O-ring.

f. Connect vacuum hoses to distributor.

g. Clip the distributor lead wire.

NOTE:

Be careful that the holes in the distributor plate and crankcase are correctly lined up.

40) Connect spark plug cords to spark plugs and cord supporters and distributor cord to cord supporter.

41) Install oil level gauge if it has been removed.

42) Install carburetor protector. [For 49 States (except 4WD & 4WD-AT) and California]

43) Remove Engine Stands (399814300).

Downloaded from www.Manualslib.com manuals search engine

3-10. Troubleshooting

Trouble and possible cause			Corrective action
1. Engine does not start	1. Starter motor does not rotate	1) Defective battery and/or charging system • Over discharged battery. • Defective charging system	Charge or replace. See "Troubleshooting of charging system" in Chapter 15.
		2) Defective starting system	See "Troubleshooting of starting system" in Chapter 15.
		3) Defective engine • Bearing seizure on crankshaft, connecting rod, etc. • Piston seizure or sticking	Repair or replace. Repair or replace.
	2. Starter motor rotates but engine does not start.	1) Defective starting system (starting speed too low, pinion does not mesh with ring gear, etc.)	See "Troubleshooting of starting system" in Chapter 15.
		2) Defective ignition system (no continuity ignition current, etc.)	See "Troubleshooting of ignition system" in Chapter 15.
		3) Defective fuel system (malfunction of choke system, over flow, no flow of fuel, etc.)	See "Troubleshooting of carburetor" in Chapter 4. See "Troubleshooting of fuel system" in Chapter 4.
		4) Insufficient engine compression pressure	See 3-3, 2 in this Chapter.
		5) Improper engine oil	Replace with recommended oil.
2. Rough idle, stalls	1. Defective ignition system	1) Improper ignition timing	Adjust.
		2) Defective spark plug • Improper spark plug gap • Fouled spark plug • Defective insulator	Adjust or replace. Clean or replace. Replace.
		3) Defective cord or wiring • Loose and/or damaged contacts of ignition system connection • Defective cord or wires	Inspect, repair or replace. Replace.
		4) Defective ignition coil and outer resistor (except 4WD)	Replace
		5) Malfunction of distributor	See "Troubleshooting of ignition system" in Chapter 15.

Downloaded from www.Manualslib.com manuals search engine

Trouble and possible cause			Corrective action
		6) Defective distributor • Cap troubles (cracked cap, damaged or corroded cord contacts, etc.) • Malfunction of operating parts (vacuum advance, centrifugal advance mechanism, etc.) • Improper air gap or defective pick up coil.	 Clean or replace. Repair or replace Adjust or replace.
		7) Defective ignition control system. • Clogged vacuum lines • Malfunction of operating parts (Thermo vacuum valve I, check valve etc.)	 Inspect, repair or replace. Replace.
	2. Defective fuel and air intake system	1) Improper idle speed.	Adjust.
		2) Clogged air cleaner element	Replace.
		3) Defective carburetor • Improper float level • Malfunction of choke system • Plugged jets or air bleeds • Malfunction of antidieseling switch (Hitachi carburetor) or idle stop solenoid (C-W carburetor) or defective wire connection • Defective metering rod (C-W carburetor) • Others	 Adjust. Adjust, repair or replace. Clean or replace. Repair or replace. Repair or replace. See "Troubleshooting of carburetor" in Chapter 4.
		4) Defective fuel pump, filter, delivery line, etc.	See "Troubleshooting of fuel system" in Chapter 4.
		5) Vacuum leaks • Leakage from vacuum lines • Loose intake manifold bolts or defective gasket. • Loose carburetor nuts or defective gasket • Defective EGR valve, PCV valve, 6) Malfunction of fuel feed system. 7) Malfunction of ECC system.	 Inspect, repair or replace. Tighten or replace. Tighten or replace. Replace. Adjust, repair or replace. Refer to Chapter 5.
	3. Insufficient engine compression pressure	1) Improper valve clearance	Adjust.
		2) Loose spark plug or defective gasket	Tighten or replace.
		3) Loose cylinder head nuts or defective head gasket	Tighten or replace.
		4) Defective valve seat contact	Resurface valve and valve seat.
		5) Seizure of valve stem	Repair or replace.

Downloaded from www.Manualslib.com manuals search engine

Trouble and possible cause			Corrective action
		6) Deterioration or damage of valve spring	Replace.
		7) Seizure or worn piston ring, cylinder, piston	Repair or replace.
		8) Improper valve timing	Disassemble and correct.
		9) Improper engine oil (low viscosity)	Replace with oil of proper grade.
3. Low output, hesitation, poor acceleration	1. Defective ignition system	1) Improper ignition timing	Adjust.
		2) Defective spark plug. • Improper spark plug gap • Fouled spark plug • Defective insulator	 Adjust or replace. Clean or replace. Replace.
		3) Defective cord or wiring • Loose and/or damaged contacts of ignition system connection • Defective cords or wires	 Inspect, repair or replace. Replace.
		4) Others	See "Troubleshooting" in Chapter 15.
	2. Defective fuel and air intake system	1) Improper idle speed and mixture	Adjust.
		2) Clogged air cleaner element	Replace.
		3) Defective carburetor • Improper float level • Clogged main jet • Defective accelerator pump • Malfunction of secondary diaphragm (Hitachi carburetor) • Defective power valve (Hitachi carburetor) • Malfunction of ECC system • Others	 Adjust. Clean Inspect, repair or replace. Inspect, repair or replace. Inspect, clean or replace. Refer to Chapter 5. See "Troubleshooting of carburetor" in Chapter 4.
		4) Defective fuel pump, filter, delivery line, etc.	See "Troubleshooting of fuel system" in Chapter 4.
		5) Vacuum leaks (vacuum lines, etc.)	Inspect, repair or replace.
	3. Insufficient engine compression pressure	1) Improper valve clearance	Adjust.
		2) Loose spark plug or defective gasket	Tighten or replace.
		3) Loose cylinder head nuts or defective head gasket	Tighten or replace.
		4) Others	See 3-3, 2 in this Chapter.

Downloaded from www.Manualslib.com manuals search engine

Trouble and possible cause			Corrective action
	4. Others	1) Malfunction of EGR system.	Inspect, repair or replace.
		2) Overcooling or overheating	See "Troubleshooting of engine cooling system" on page 3–83.
		3) Excessive carbon deposit in combustion chamber.	Clean.
		4) Slipping of clutch	Inspect, adjust or replace.
		5) Dragging of brake	Inspect and adjust.
4. Engine speed does not return to normal idle speed.		1) Defective throttle linkage or accelerator cable	Inspect, adjust and repair.
		2) Malfunction of choke system	Adjust, repair or replace.
		3) Malfunction of ignition control system • Malfunction of vacuum controller or centrifugal advancer in distributor • Clogged vacuum lines • Malfunction of operating parts (Thermo vacuum valve I, check valve, etc.)	 Repair or replace. Inspect, repair or replace. Replace.
5. Dieseling		1) Improper ignition timing	Adjust.
		2) Improper idle speed	Adjust.
		3) Malfunction of antidieseling switch (Hitachi carburetor) or idle stop solenoid (C-W carburetor) or defective wire connection	Repair or replace.
		4) Malfunction of choke system	Adjust, repair or replace.
6. Explosive afterburning in exhaust system		1) Improper ignition timing	Adjust.
		2) Improper idle speed	Adjust.
		3) Improper valve clearance	Adjust.
		4) Malfunction of choke system	Adjust, repair or replace.
		5) Malfunction of EGR system	Inspect, repair or replace.
		6) Malfunction of AAV system	Replace.
7. Excessive engine oil consumption	1. Oil leakage	1) Loose oil drain plug or defective gasket.	Tighten or replace.

Downloaded from www.Manualslib.com manuals search engine

Trouble and possible cause			Corrective action
		2) Loose oil pan attaching bolts or defective oil pan gasket	Tighten or replace.
		3) Loose oil pump attaching bolts or defective oil pump gasket	Tighten or replace.
		4) Defective oil filler sealing	Replace.
		5) Defective crankshaft oil seals	Replace.
		6) Defective rocker cover gasket	Replace.
	2. Oil enters combustion chamber past piston ring.	1) Improper piston ring gap	Replace.
		2) Worn or damaged piston ring, cylinder, piston	Replace.
	3. Oil enters combustion chamber through valve stem-to-guide clearance.	1) Worn or damaged intake valve oil seal	Replace.
		2) Excessive clearance between valve stem and guide	Replace.
8. Excessive fuel consumption	1. Defective ignition system	1) Improper ignition timing	Adjust.
		2) Defective spark plug • Improper spark plug gap • Fouled spark plug • Defective insulator	 Adjust. Clean or replace. Replace.
		3) Defective cord or wiring • Loose and/or damaged contacts of ignition system connection • Defective cords or wires	 Inspect, repair or replace. Replace.
		4) Others	See "Troubleshooting" in Chapter 15.
	2. Defective fuel and air intake system	1) Improper idle speed	Adjust
		2) Clogged air cleaner element	Replace.
		3) Defective cord, wiring or vacuum line • Improper float level • Loose main jet or clogged main air bleed • Clogged vacuum pipe or disconnected hose • Others	 Adjust. Tighten, clean or replace. Check or replace pipe. See "Troubleshooting of carburetor" in Chapter 4.
		4) Defective fuel pump, filter, delivery line, etc.	See "Troubleshooting of fuel system" in Chapter 4.
		5) Malfunction of ECC system	Refer to Chapter 5.

Downloaded from www.Manualslib.com manuals search engine

Trouble and possible cause			Corrective action
	3. Insufficient engine compression pressure	1) Improper valve clearance	Adjust.
		2) Loose spark plug or defective gasket	Tighten or replace.
		3) Loose cylinder head nuts or defective head gasket	Tighten or replace.
		4) Others	See 3-3, 2 in this Chapter.
	4. Others	1) Overcooling (defective thermostat)	Replace.
		2) Slipping of clutch	Inspect, adjust or replace.
		3) Dragging of brake	Inspect and adjust.
		4) Improper air pressure of tire	Correct.
9. Overheating, overcooling, coolant leaks			See "Troubleshooting of engine cooling system" on page 3–83.
10. Odor of fuel		1) Fuel leakage from fuel tank, filler cap, fuel pump and fuel lines.	Check for cracks or cloggings. Retighten connecting clamps or replace.
		2) Overflow from float chamber in carburetor	Adjust float level.
		3) Leaking evaporative emission lines	Check for cracks or cloggings of evaporative emission lines. Retighten clamps on connections. Replace if necessary.

	Type of sound	Condition		Possible cause
11. Excessive engine noise	Regular clicking sound	Sound increases as engine speed increase.	Valve clearance is not normal.	
			Valve clearance is normal.	• Worn valve rocker arm. • Bent push rod. • Broken valve spring. • Worn valve lifter hole.
	Heavy and dull metallic knock	Oil pressure is low		• Worn crankshaft main bearing. • Worn connecting rod bearing (big end).
		Oil pressure is normal.		• Loose flywheel mounting bolts. • Damaged engine mounting

Downloaded from www.Manualslib.com manuals search engine

	Type of sound	Condition	Possible cause
	High-pitched metallic knock (Engine knocking)	Sound is noticeable when accelerating with an overload	• Ignition timing advanced. • Accumulation of carbon inside combustion chamber. • Wrong spark plug. • Defective distributor vacuum controller. • Improper gasoline.
	Metallic knock when engine speed is medium (1,000 to 2,000 rpm).	Sound is reduced when spark plug in noisy cylinder is shortened out.	• Worn crankshaft main bearing. • Worn bearing at crankshaft end of connecting rod.
	Knocking sound when engine is operating under idling speed and engine is warm.	Sound is reduced when spark plug in noisy cylinder is shortened out.	• Worn cylinder liner and piston ring. • Broken or stuck piston ring. • Worn piston pin and hole at piston end of connecting rod.
		Sound is not reduced if each spark plug is shortened out in turn.	• Unusually worn valve lifter. • Worn cam gear. • Worn camshaft journal bore in crankcase.
	Squeaky sound		• Insufficient alternator lubrication.
	Rubbing sound		• Defective alternator brush and rotor contact.
	Gear scream when starting engine.		• Defective ignition starter switch. • Worn ring gear and starter pinion.
	Sound like polishing glass with a dry cloth		• Loose drive belt. • Defective water pump shaft.
	Hissing sound		• Loss of compression. • Air leakage in air intake system, hoses, connections or manifolds.

Downloaded from www.Manualslib.com manuals search engine

1. Lubrication System

Before troubleshooting, make sure that the engine oil level is correct and no oil leakage exists.

Trouble	Possible cause		Corrective action
1. Warning light remains on.	1) Oil pressure switch failure	Cracked diaphragm	Replace.
		Oil leakage within switch	Replace.
	2) Low oil pressure	Clogged oil filter	Replace.
		Malfunction of oil by-pass valve	Clean or replace.
		Malfunction of oil relief valve	Clean or replace.
		Clogged oil passage	Clean.
		Excessive tip clearance and side clearance of oil pump rotor and gear	Replace.
		Clogged oil strainer or broken pipe	Clean or replace.
	3) No oil pressure	Insufficient engine oil	Replenish.
		Broken pipe of oil strainer	Replace.
		Stuck oil pump drive gear and rotor	Replace.
2. Warning light does not go on.	1) Burnt-out bulb		Replace.
	2) Poor contact of switch contact points		Replace.
	3) Disconnection of wiring		Repair.
3. Warning light flickers momentarily.	1) Poor contact at terminals		Repair.
	2) Defective wiring harness		Repair.
	3) Low oil pressure		Check for the same possible causes as listed in 1.–2.

Downloaded from www.Manualslib.com manuals search engine

2. Cooling System

Trouble	Possible cause	Corrective action
Over-heating	a. Insufficient coolant.	Replenish coolant, inspect for leakage, and repair.
	b. Loose drive belt.	Adjust drive belt tension.
	c. Oil on drive belt.	Replace.
	d. Malfunction of thermostat.	Replace.
	e. Malfunction of water pump.	Repair or replace.
	f. Clogged coolant passage.	Clean.
	g. Improper ignition timing.	Adjust.
	h. Clogged or leaking radiator.	Clean or repair, or replace.
	i. Improper engine oil.	Replace.
	j. Air-fuel mixture too thin.	Inspect and repair fuel system.
	k. Excessive back pressure in exhaust system.	Clean or replace.
	l. Insufficient clearance between piston and cylinder.	Adjust or replace.
	m. Improper valve clearance.	Adjust.
	n. Slipping clutch.	Repair or replace.
	o. Dragging brake.	Adjust.
	p. Improper transmission oil.	Replace.
	q. Defective thermostat.	Replace.
	r. Malfunction of electric fan.	Replace.
Over-cooling	a. Outside temperature extremely low.	Partly cover radiator front area.
	b. Defective thermostat.	Replace.
Coolant leaks	a. Loosened or damaged connecting units on hoses.	Repair or replace.
	b. Leakage from water pump.	Repair or replace.
	c. Leakage from thermo valve.	Replace.
	d. Leakage from intake manifold.	Repair or replace.
	e. Leakage around cylinder head gasket.	Retighten cylinder head nuts or replace gasket.
	f. Damaged or cracked cylinder head and crankcase.	Repair or replace.
	g. Damaged or cracked thermostat case.	Repair or replace.
	h. Leakage from radiator.	Repair or replace.
Noise	a. Defective drive belt.	Replace.
	b. Defective electric fan.	Replace.
	c. Defective water pump bearing.	Replace.
	d. Defective water pump mechanical seal.	Replace.

Downloaded from www.Manualslib.com manuals search engine

3-11. Special Tools

399814300	899724100	899768602	898878600
ENGINE STAND	SPRING PRESS	VALVE GUIDE ADJUSTER	STUD BOLT WRENCH
Crankcase	Valve spring	Exhaust valve guide	Crankcase stud bolt
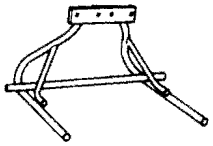 *Fig. 3-185* A5-141	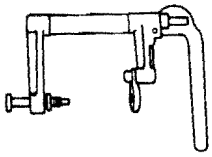 *Fig. 3-189* A5-145	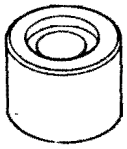 *Fig. 3-193* A5-148	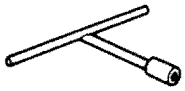 *Fig. 3-197* A5-152
899524100	899714110	899768603	499067000
PULLER SET	REMOVER SET	VALVE GUIDE ADJUSTER	OIL SEAL INSTALLER
Crankshaft pulley	Cam shaft	Intake valve guide	Oil seal (crankcase)
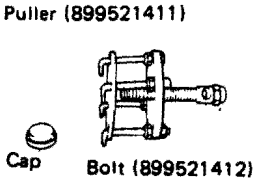 *Fig. 3-186* A5-142	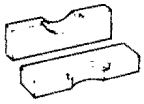 *Fig. 3-190* A12-181	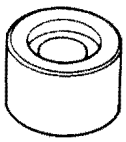 *Fig. 3-194* A5-149	*Fig. 3-198* A5-388
399094310	399765101	899764105	398744300
PISTON PIN REMOVER	CYLINDER HEAD TABLE	VALVE GUIDE REAMER	PISTON GUIDE
Piston pin	Cylinder head	Valve guide	Piston
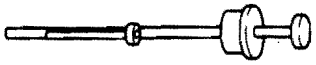 *Fig. 3-187* A5-143	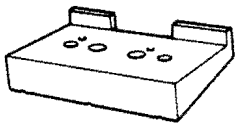 *Fig. 3-191* A5-146	*Fig. 3-195* A5-150	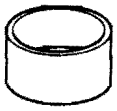 *Fig. 3-199* A5-155
899804100	899764104	898858600	399284300
VALVE LIFTER CLIP	VALVE GUIDE REMOVER	OIL SEAL INSTALLER	PISTON PIN GUIDE
Valve lifter	Valve guide	Valve guide oil seal	Piston pin
Fig. 3-188 A5-144	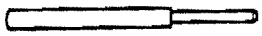 *Fig. 3-192* A5-147	*Fig. 3-196* A5-151	*Fig. 3-200* A5-156

Downloaded from www.Manualslib.com manuals search engine

499987006	499747000	498767000	499037000
SOCKET WRENCH	CLUTCH DISC GUIDE	VALVE CLEARANCE ADJUSTER	REMOVER & REPLACER
Cylinder head nuts	Clutch disc	Intake and exhaust valves	Connecting rod bushing
Fig. 3-201 ST-030	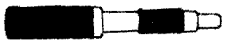 *Fig. 3-202* A11-014	*Fig. 3-203* ST-029	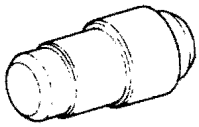 *Fig. 3-204* A5-389
499990100			
SOCKET			
Oxygen (O_2) sensor			
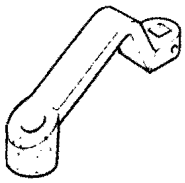 *Fig. 3-205* A10-133			

Downloaded from www.Manualslib.com manuals search engine

CHAPTER 4

FUEL SYSTEM

		Page
4– 1.	SPECIFICATIONS AND SERVICE DATA	4– 2
4– 2.	HITACHI CARBURETOR	4– 5
4– 3.	CARTER-WEBER CARBURETOR	4–20
4– 4.	COMPONENT PARTS OF FUEL SYSTEM (Except Carburetor)	4–29
4– 5.	FUEL TANK	4–31
4– 6.	FUEL FILLER PIPE	4–32
4– 7.	FUEL SEPARATOR	4–33
4– 8.	FUEL FILTER	4–34
4– 9.	FUEL PUMP	4–35
4–10.	VAPOR SEPARATOR	4–36
4–11.	FUEL DELIVERY AND FUEL RETURN LINE	4–37
4–12.	EVAPORATION LINE AND CANISTER	4–38
4–13.	TROUBLESHOOTING	4–39
4–14.	SPECIAL TOOLS	4–45

SUBARU

Downloaded from www.Manualslib.com manuals search engine

4-1. Specifications and Service Data

1. Recommended Fuel

The SUBARU 1600 cc and 1800 cc engines are designed to get satisfactory engine performance and to keep clean exhaust gas by using gasoline no less than 90 octane.

NOTE:
a. Octane as selected by Research method.
b. Use unleaded gasoline only.

2. Hitachi Carburetor

Vehicle			All California models and non-4WD of non-California models			All Canada models and 4WD of non-California models	
			1600	1800		1800	
			MT		AT	MT	AT
Carburetor			DCP306-17	DCP306-18	DCP306-19	DCP306-21	DCP306-22
Air horn dia. (Inner dia. × Outer dia.)			55 × 59 mm (2.17 × 2.32 in)				
Throttle bore (P-S)			26 – 30 mm (1.02 – 1.18 in)				
Inner dia. of needle valve			1.7 mm (0.067 in)				
Main system	Main jet (P-S)		#116 – #145	#114 – #145		#109 – #140	#109 – #145
	Main air bleed (P-S)		#60 – #80			#70 – #80	
	Main nozzle dia. (Inner dia. × Outer dia.)	P	2.6 × 3.5 mm (0.102 × 0.138 in)			2.3 × 3.5 mm (0.091 × 0.138 in)	
		S	2.8 × 4.0 mm (0.110 × 0.157 in)				
	Main nozzle end surface angle	P	5°				
		S	0°				
	Emulsion tube (Inner dia. × Outer dia. × Length)	P	2.4 × 3.6 × 34 mm (0.094 × 0.142 × 1.339 in)			2.4 × 3.6 × 40 mm (0.094 × 0.142 × 1.575 in)	
		S	1.5 × 2.5 × 39.5 mm (0.059 × 0.098 × 1.555 in)				
	Emulsion hole (Dia. number of holes)	P	0.7 mm (0.028 in) × 8			0.5 mm (0.020 in) × 2, 0.8 mm (0.031 in) × 24	
		S	0.8 mm (0.031 in) × 16				
Slow system	Slow jet (P-S)		#43 – #80				
	Slow air bleed (P-S)		#150 – #50			#160 – #90	#150 – #90
	Economizer bleed (P-S)		#95 – #90				
Power jet – vacuum required			#50 – –20.0 kPa (–150 mmHg, –5.91 inHg)			#35 – –20.0 kPa (–150 mmHg, –5.91 inHg)	– (Plugged)
Accelerating pump system	Accelerating pump nozzle dia.		0.5 mm (0.020 in)				
	Weight of accelerating pump injector		4.4 g (0.155 oz)				
Secondary valve	Type		Diaphragm type				
	Primary throttle valve opening angle and clearance when secondary throttle valve starts to open		G_2 = 6.0 mm (0.236 in) θ = 49°				

Downloaded from www.Manualslib.com manuals search engine

FUEL SYSTEM

Vehicle		All California models and non-4WD of non-California models			All Canada models and 4WD of non-California models	
		1600	1800		1800	
		MT		AT	MT	AT
Carburetor		DCP306-17	DCP306-18	DCP306-19	DCP306-21	DCP306-22
Starting system	Choke system	Automatic choke				
	Choke valve angle when fully closed	16°				
	Fast idle opening angle and clearance of primary throttle valve	15° G_1 = 0.98 mm (0.0386 in)	17.5° G_1 = 1.22 mm (0.0480 in)	18.5° G_1 = 1.34 mm (0.0528 in)	17.5° G_1 = 1.22 mm (0.0480 in)	18.5° G_1 = 1.34 mm (0.0528 in)
Float adjustment	Fuel level from upper mating surface of float chamber	20.2 – 21.8 mm (0.795 – 0.858 in)				
	Clearance between float and upper mating surface on float chamber when front seat comes in contact with valve stem	H = 11.0 – 11.5 mm (0.433 – 0.453 in)				
	Clearance between valve stem and float seat when float is fully lowered	L = 1.3 – 1.7 mm (0.051 – 0.067 in)				
Inner dia. of auxiliary passage (at nipple)	P.M.	#300				
	S.M.	#300 (Safety orifice: #150)			#300 (Safety orifice: #110)	
	P.S.	#300				

Downloaded from www.Manualslib.com manuals search engine

3. Carter-Weber Carburetor

Carburetor		TYF7419S
Throttle bore		36.5 mm (1.437 in)
Inner dia. of needle seat		2.34 mm (0.0921 in)
Low-speed system	Low-speed jet tube dia.	0.70 mm (0.0276 in)
	By-pass bleed dia.	1.25 mm (0.0492 in)
	Economizer dia.	1.70 mm (0.0669 in)
	Body bleed dia.	1.25 mm (0.0492 in)
High-speed system	Main metering jet	2.34 mm (0.0921 in)
	Main well bleed dia.	0.57 mm (0.0224 in)
	Nozzle tip bleed dia.	0.79 mm (0.0311 in)
	Nozzle discharge dia.	2.44 mm (0.0961 in)
	Metering rod 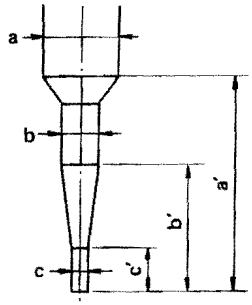 *Fig. 4-1* A8-395	a = 2.04 ± 0.05 mm (0.0803 ± 0.0020 in) b = 1.78 ± 0.05 mm (0.0701 ± 0.0020 in) c = 1.55 ± 0.05 mm (0.0610 ± 0.0020 in) a' = 16.51 ± 0.76 mm (0.6500 ± 0.0299 in) b' = 9.40 ± 0.76 mm (0.3701 ± 0.0299 in) c' = 5.59 ± 0.76 mm (0.2201 ± 0.0299 in)
Accelerating pump system	Pump nozzle dia.	0.61 mm (0.0240 in)
	Pump bleed dia.	0.51 mm (0.0201 in)
Choke system	Choke system	Automatic choke
	Choke-valve closed angle	15°
Float setting		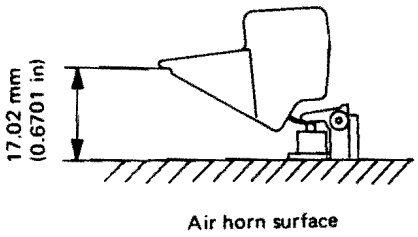 A8-396 *Fig. 4-2*

Downloaded from www.Manualslib.com manuals search engine

4. Fuel Tank and Fuel Pump

Fuel tank	Location			Under rear floor	
	Capacity	Except 4WD	Hatchback	50 Liter (13.2 US gal, 11.0 Imp gal)	
			Others	60 Liter (15.9 US gal, 13.2 Imp gal)	
		4WD	Hatchback 4WD	45 Liter (11.9 US gal, 9.9 Imp gal)	
			Others	55 Liter (14.5 US gal, 12.1 Imp gal)	
Fuel pump	Type			Electromagnetic plunger type	
	Discharge pressure			9.32 – 14.22 kPa (0.095 – 0.145 kg/cm^2, 1.35 – 2.06 psi)	AT; suction head 990 mm (38.98 in) discharge head 220 mm (8.66 in) 2.0 mm (0.079 in) dia. nozzle attached
	Discharge volume			More than 28ℓ/h (7.4 US gal/h, 6.2 Imp gal/h)	
	Current			Less than 1.5 A	
	Starting voltage			Less than 8 V	

4-2. Hitachi Carburetor

1. Construction

This carburetor consists of a float system, primary (normal) side and secondary (high output) side.

One float system is commonly used for both primary and secondary sides.

This carburetor has elemental system as follows.

1. Float system — Provided with fuel return system
2. Primary side
   - Slow system
   - Main system
   - Accelerating pump system
   - Power system
   - Choke system
3. Secondary side
   - Step system
   - Main system

Downloaded from www.Manualslib.com manuals search engine

• Float System

1 Fuel inlet pipe
2 Fuel return pipe
3 Filter
4 Needle valve
5 Float
6 Solenoid valve III
7 Air vent pipe
8 Air filter
9 Vacuum switching valve
10 Thermo vacuum valve
11 Intake manifold

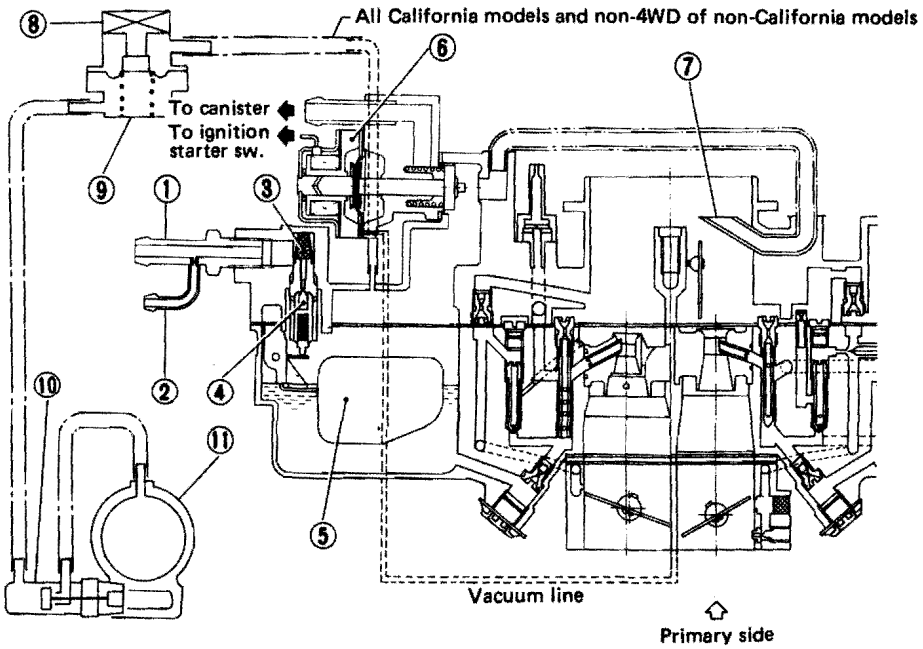

Fig. 4-3 Float system

A8-487

All California models and non-4WD of the non-California models are provided with a vacuum switching valve. When the coolant temperature exceeds the specified level, the float chamber is opened to atmospheric pressure through the vacuum switching valve.

• Primary Side

1) Slow System

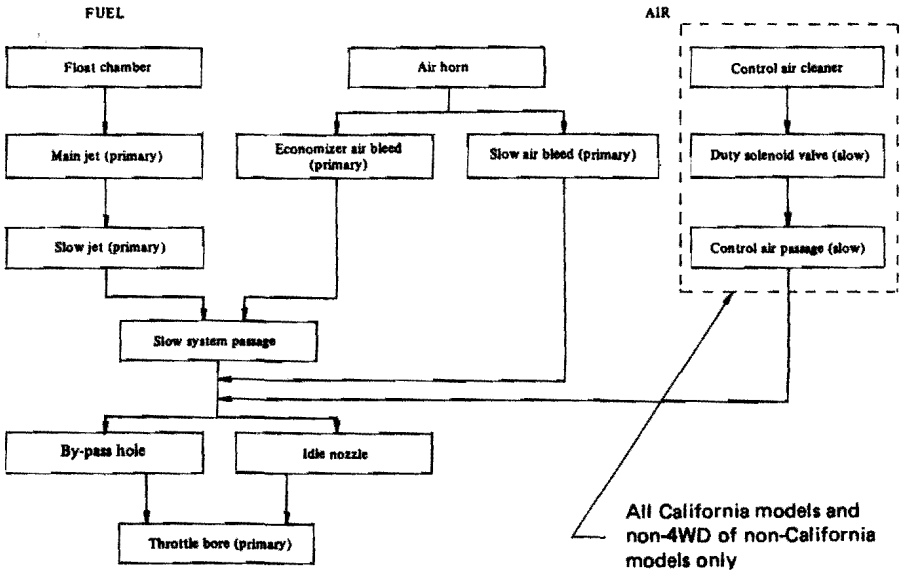

A8-273

Fig. 4-4 Fuel and air flow in slow system

Downloaded from www.Manualslib.com manuals search engine

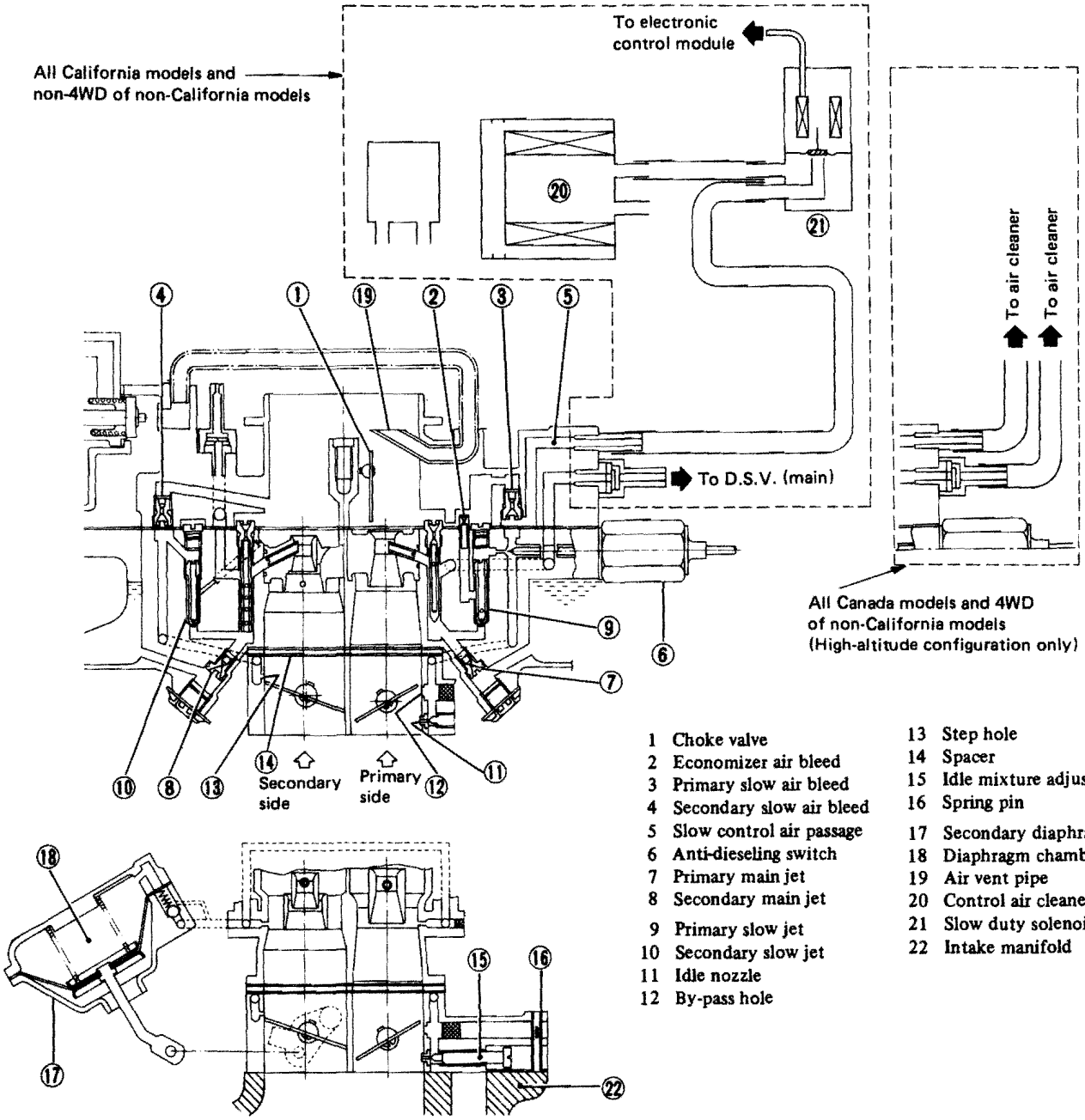

1 Choke valve
2 Economizer air bleed
3 Primary slow air bleed
4 Secondary slow air bleed
5 Slow control air passage
6 Anti-dieseling switch
7 Primary main jet
8 Secondary main jet
9 Primary slow jet
10 Secondary slow jet
11 Idle nozzle
12 By-pass hole
13 Step hole
14 Spacer
15 Idle mixture adjusting screw
16 Spring pin
17 Secondary diaphragm
18 Diaphragm chamber
19 Air vent pipe
20 Control air cleaner
21 Slow duty solenoid valve
22 Intake manifold

A8-489

Fig. 4-5 Slow and step system

2) Main System

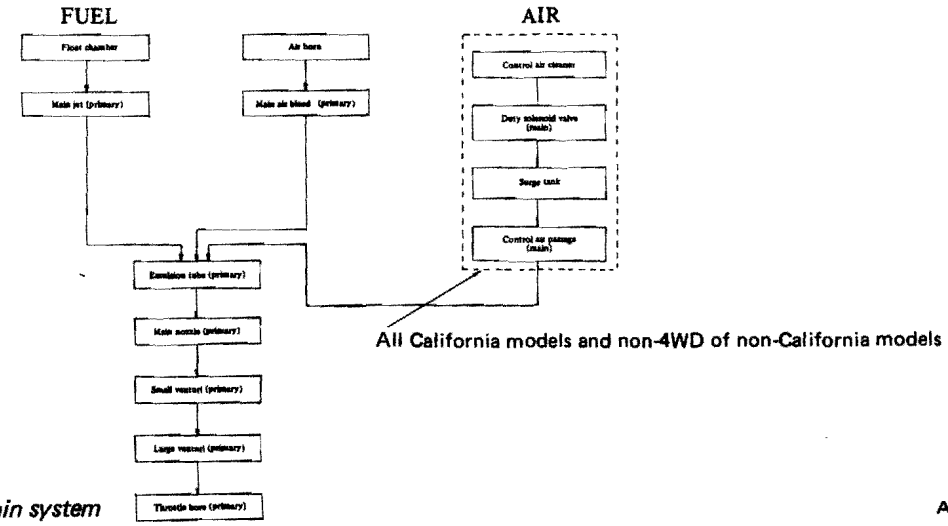

Fig. 4-6 Fuel and air flow in main system

A8-490

Downloaded from www.Manualslib.com manuals search engine

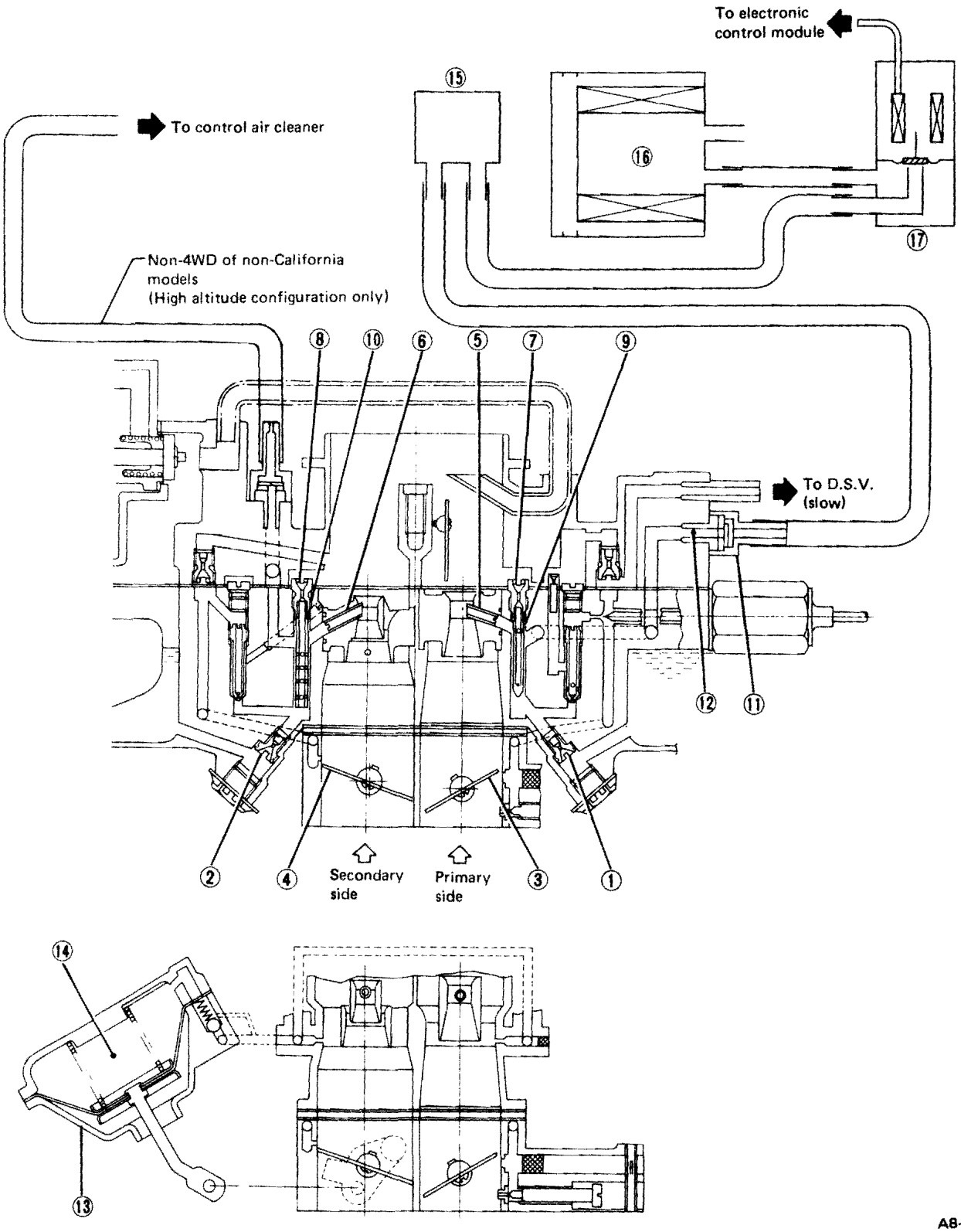

1 Primary main jet
2 Secondary main jet
3 Primary throttle valve
4 Secondary throttle valve
5 Primary main nozzle
6 Secondary main nozzle
7 Primary main air bleed
8 Secondary main air bleed
9 Primary emulsion tube
10 Secondary emulsion tube
11 Check valve
12 Main control air passage
13 Secondary diaphragm
14 Diaphragm chamber
15 Surge tank
16 Control air cleaner
17 Main duty solenoid valve

Fig. 4-7 Main system (All California models and non-4WD of non-California models)

Downloaded from www.Manualslib.com manuals search engine

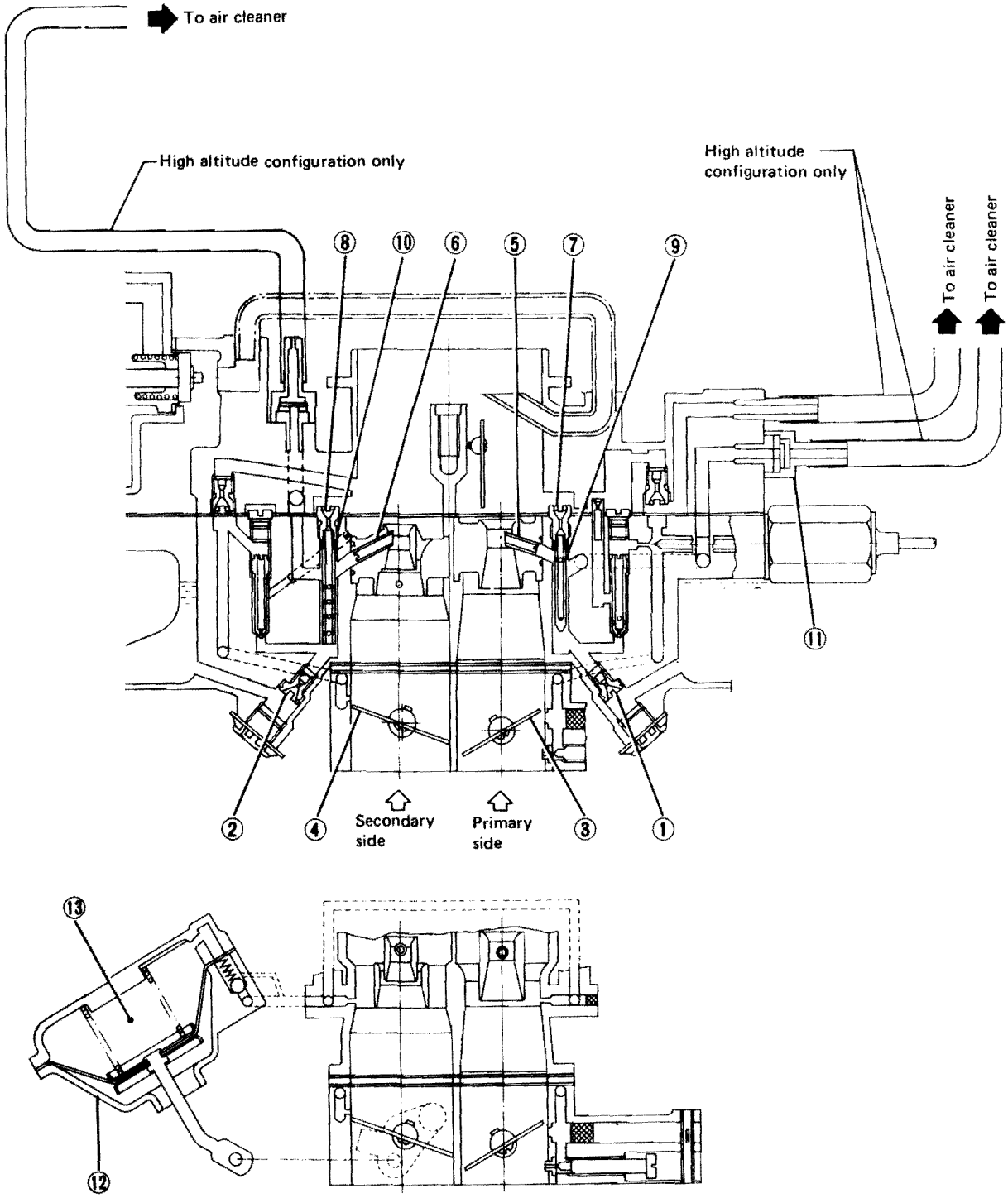

1 Primary main jet
2 Secondary main jet
3 Primary throttle valve
4 Secondary throttle valve
5 Primary main nozzle
6 Secondary main nozzle
7 Primary main air bleed
8 Secondary main air bleed
9 Primary emulsion tube
10 Secondary emulsion tube
11 Check valve
12 Secondary diaphragm
13 Diaphragm chamber

Fig. 4-8 Main system (All Canada models and 4WD of non-California models)

Downloaded from www.Manualslib.com manuals search engine

3) Accelerating Pump System

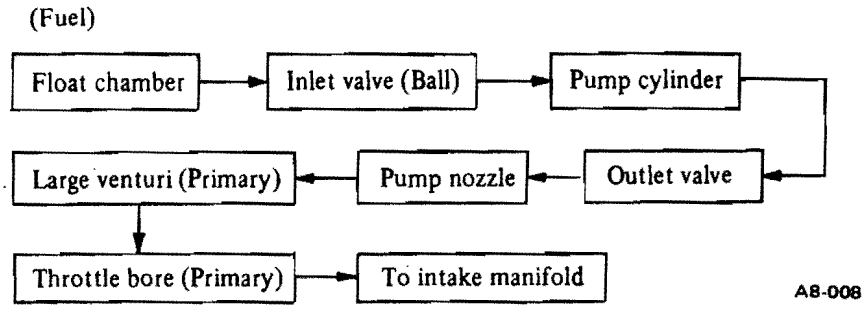

Fig. 4-9 Fuel flow in accelerating pump system

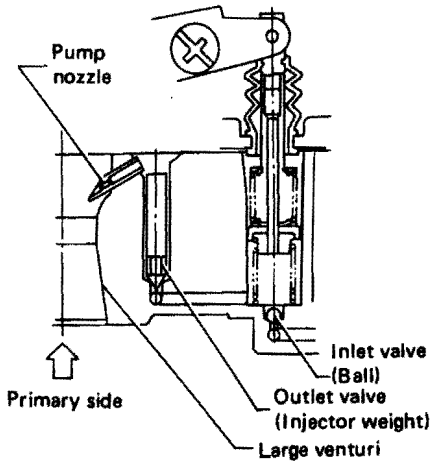

Fig. 4-10 Accelerating pump A8-378

4) Power System

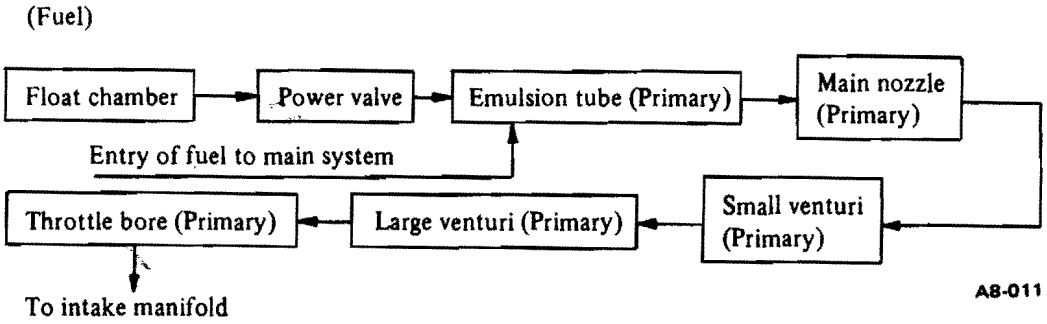

Fig. 4-11 Fuel flow in power system

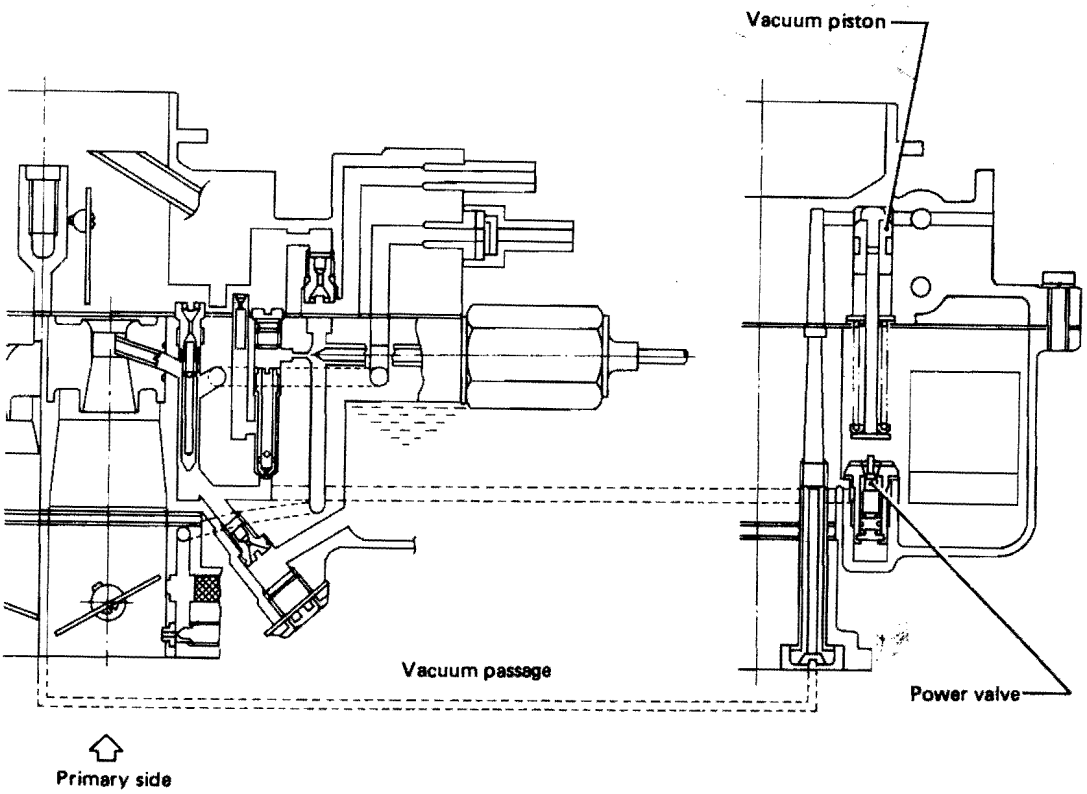

Fig. 4-12 Power system A8-428

Downloaded from www.Manualslib.com manuals search engine

5) Automatic Choke

The choke valve is linked to the bimetal through a choke lever so that the choke valve is kept opened at the degree corresponding to the ambient temperature by means of the bimetal force.

When the engine is started, the vacuum diaphragm is operated by vacuum pressure and the choke valve is opened through a vacuum piston whereby the overchoke is prevented.

On all California models and non-4WD of non-California models, when the engine is started with coolant temperature under 15°C (59°F), solenoid valve III opens the passage to air cleaner until coolant temperature reaches 25°C (77°F), and this reduces the travel of vacuum position.

On all Canada models and 4WD of non-California models, the travel of the vacuum piston is reduced when the coolant temperature drops below 18°C (64°F).

After the engine is started, the bimetal is warmed by the heater to adjust the opening of the choke valve automatically.

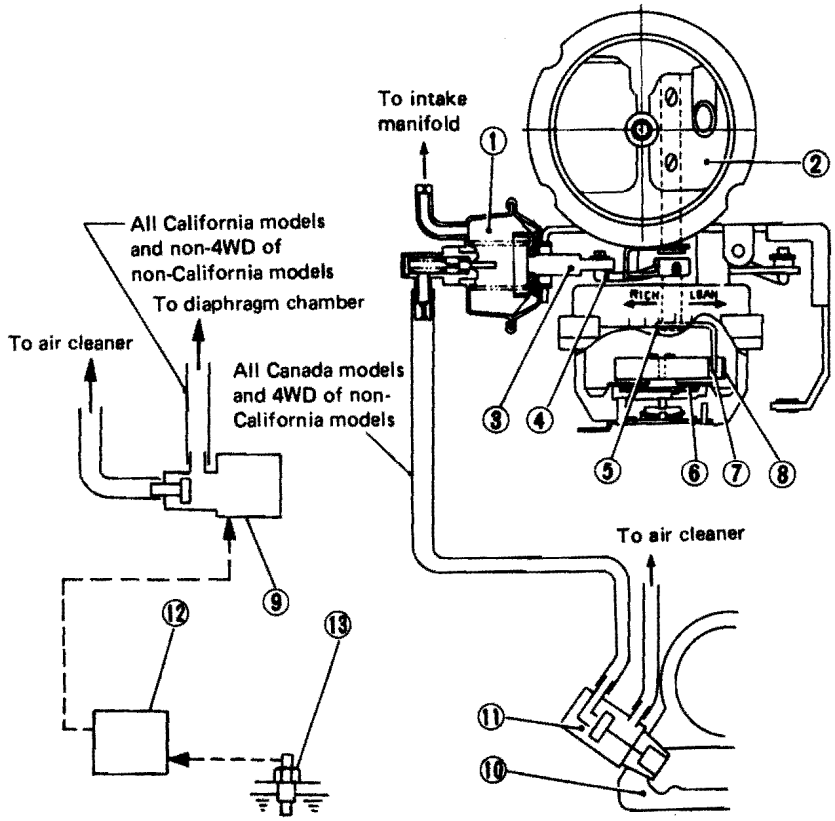

1 Diaphragm chamber
2 Chocke valve
3 Vacuum piston
4 Connecting rod
5 Setting point is one notch to rich side (10 degrees/notch)
6 Heater
7 Choke lever
8 Bimetal
9 Solenoid valve III
10 Intake manifold
11 Thermo vacuum valve II
12 ECM
13 Thermosensor

Fig. 4-13

• Secondary Side

1) Step System

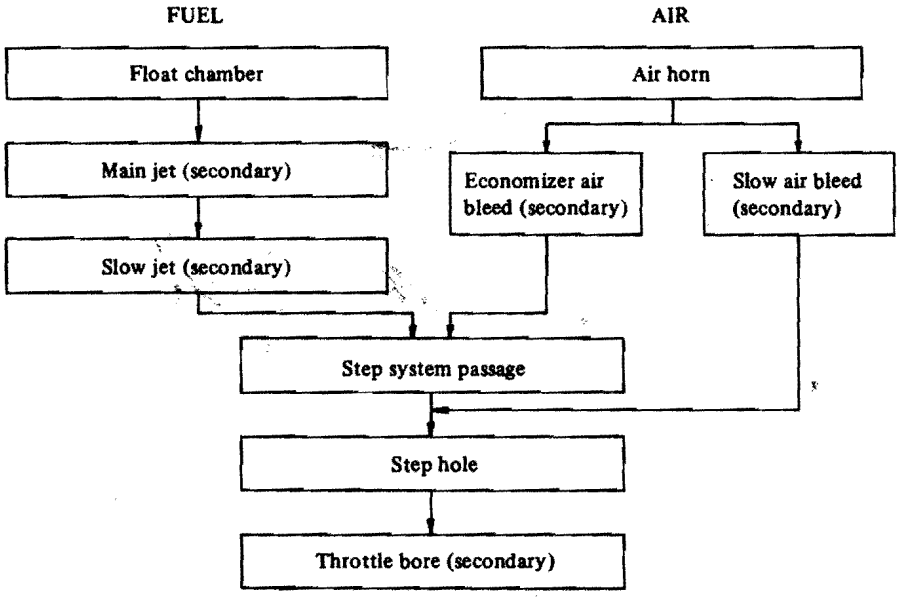

NOTE:
As for the construction, refer to 1) Slow system in Primary Side.

Fig. 4-14 Fuel and air flow in the step system

A8-380

Downloaded from www.Manualslib.com manuals search engine

2) Main System

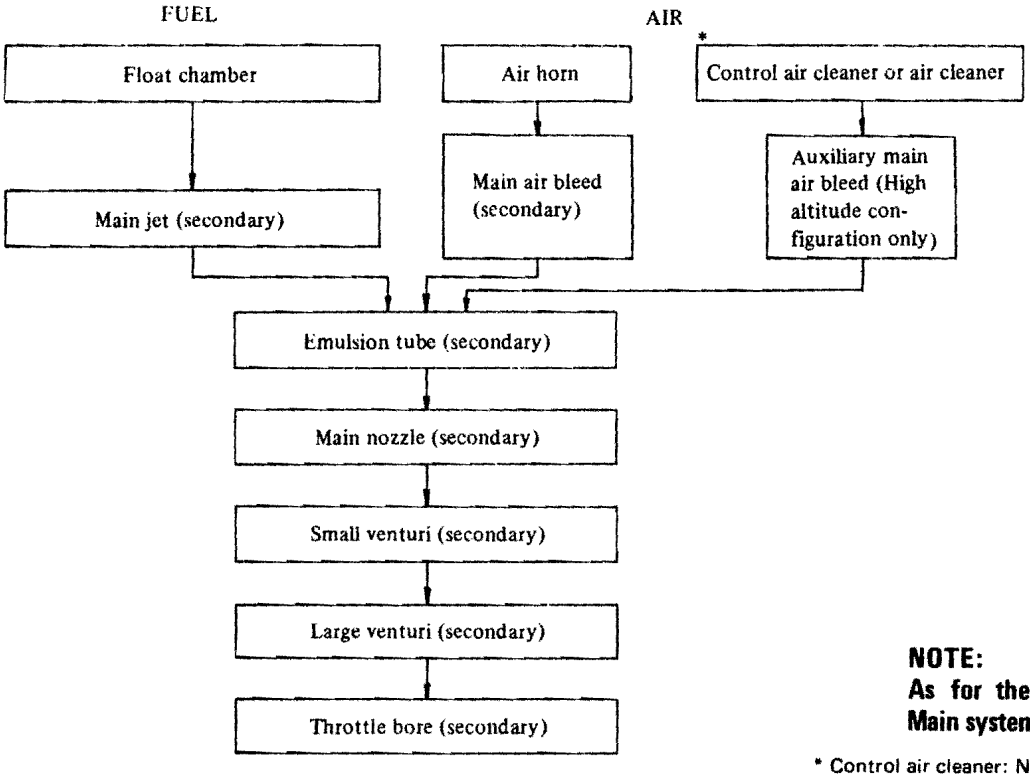

Fig. 4-15 Fuel and air flow in main system

A8-494

NOTE:
As for the construction, refer to 2) Main system in Primary Side.

* Control air cleaner: Non-4WD of non-California models
Air cleaner: 4WD of non-California models

Downloaded from www.Manualslib.com manuals search engine

2. Component Parts

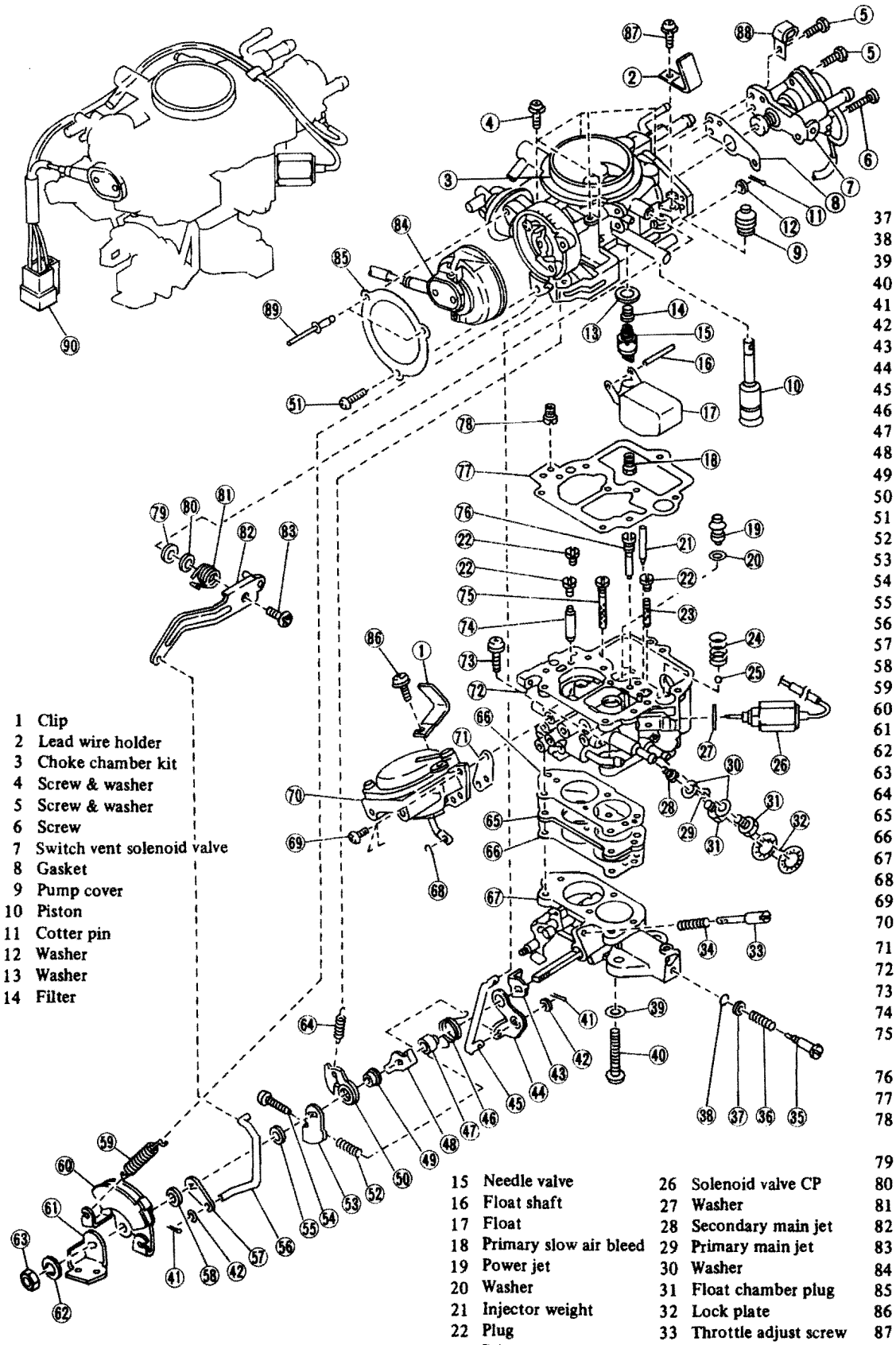

1 Clip
2 Lead wire holder
3 Choke chamber kit
4 Screw & washer
5 Screw & washer
6 Screw
7 Switch vent solenoid valve
8 Gasket
9 Pump cover
10 Piston
11 Cotter pin
12 Washer
13 Washer
14 Filter
15 Needle valve
16 Float shaft
17 Float
18 Primary slow air bleed
19 Power jet
20 Washer
21 Injector weight
22 Plug
23 Primary slow jet
24 Piston return spring
25 Ball
26 Solenoid valve CP
27 Washer
28 Secondary main jet
29 Primary main jet
30 Washer
31 Float chamber plug
32 Lock plate
33 Throttle adjust screw
34 Throttle adjust spring
35 Idle adjust screw
36 Idle adjust spring
37 Washer
38 O-ring
39 Washer
40 Screw
41 Cotter pin
42 Washer
43 Adjust plate
44 Fast idle lever A
45 Cam connecting rod
46 Spring
47 Sleeve
48 Connecting lever
49 Sleeve A
50 Return plate
51 Screw & washer
52 Idle adjust spring
53 Fast idle lever B
54 Screw
55 Washer
56 Pump connecting rod
57 Connecting lever
58 Collar
59 Throttle return spring
60 Throttle lever
61 F.I.C.D. lever
62 Spring washer
63 Nut
64 Return spring
65 Insulator
66 Gasket
67 Throttle chamber
68 "E" ring
69 Screw & washer
70 Diaphragm chamber
71 Gasket
72 Float chamber
73 Screw & washer
74 Secondary slow jet
75 Secondary main air bleed
76 Primary main air bleed
77 Gasket
78 Secondary slow air bleed
79 Spring washer
80 Washer
81 Pump lever spring
82 Pump lever
83 Pump lever shaft
84 P.T.C. bimetal CP
85 Bimetal cover
86 Screw & washer
87 Screw & washer
88 Lead wire holder
89 Blind rivet
90 Connector

Fig. 4-16

A8-495

Downloaded from www.Manualslib.com manuals search engine

3. Removal

1) Air cleaner.
2) Disconnect hoses for fuel.
a. Fuel hose
b. Fuel return hose
c. Carburetor air vent hose
3) Disconnect vacuum hoses.
a. Main diaphragm
b. Distributor advance
c. E.G.R.
d. Retard (All California models and non-4WD of non-California models)
4) Disconnect hoses for duty solenoid valves. (All California models and non-4WD of non-California models)
a. Duty solenoid valve (slow)
b. Duty solenoid valve (main)
5) Disconnect hoses.
a. Main diaphragm
b. Secondary main air bleed (High altitude configuration only)
6) Duty solenoid valve connector clamp. (All California models and non-4WD of non-California models)
7) Disconnect harness connector.
8) Disconnect accelerator cable from throttle lever.
9) Drain coolant so as to prevent it from flowing out.
10) Four carburetor attaching nuts and carburetor.

NOTE:
After removal, cover the area on the intake manifold where the carburetor was installed, in order to prevent dust from entering into the engine.

4. Disassembly

1) Precautions

1) Use wrenches and screwdrivers of proper size to remove nuts and screws. Be careful not to cause burr or damage.
2) Keep disassembled parts in order not to mix them up when reassembling.
3) Use clean gasoline and compressed air to clean the jets and fuel passages. Never use a wire or cloth.

2) Removing Linkage

1) Throttle return spring.
2) Pump lever shaft, pump lever, spring, washer and spring washer.
3) Cam connecting rod, cotter pins and washers.

NOTE:
Leave pump connecting rod as it is.

3) Removing Choke Chamber

1) Return spring of return plate.
2) Unclamp harness at two points.
3) Anti-dieseling switch.

NOTE:
Be careful not to lose the 12.2 mm washer.

4) Choke chamber, gasket and five screws.

NOTE:
Since the choke chamber is fitted with a float, take care not to damage the float.

4) Separating Float Chamber and Throttle Chamber

1) Snap ring of secondary diaphragm.
2) Secondary diaphragm, gasket and three screws.
3) Separate float chamber and throttle chamber by removing three screws.

NOTE:
a. Be careful when putting the float chamber upside down because some parts (spring, ball or injector weight) may drop off.
b. Be careful not to damage the longest screw, since it has a hole which is vacuum passage for the power valve.

5) Disassembling Choke Chamber

1) Accelerating pump piston and pump cover.
2) Float shaft and float.
3) Needle valve.

NOTE:
Be careful not to lose the 10 mm washer.

4) Primary and secondary slow air bleeds.
5) Switch vent solenoid valve, gasket and three screws.

6) Disassembling Float Chamber

1) Piston return spring, ball and injector weight.
2) Primary and secondary main air bleeds.
3) Primary and secondary plugs and slow jets.
4) Lock plate, float chamber drain plugs and primary and secondary main jets.

NOTE:
Be careful not to lose the 9 mm washers.

5) Power valve.

NOTE:
Be careful not to lose the 8 mm washer.

7) Disassembling Throttle Chamber

1) Throttle adjusting screw and spring.
2) Idle adjusting screw and spring.

NOTE:
Remove spring pin beforehand.

3) Nut and parts on throttle valve shaft.

NOTE:
Keep the disassembled parts in order.

5. Inspection

Disassembled components should be washed in clean gasoline before inspection. Particularly small holes and hollows such as fuel passage must be blown with compressed air to remove dust and dirt.

Do not use drills or wires to clean the small passages, otherwise the carburetor performance may be adversely affected due to cut or deformation.

1) Choke Chamber

1) Air horn
Check for cracks, damage on mating surfaces, damage on threads, and excessive wear of choke valve shaft contact areas.
2) Choke valve
Check for deformation and rust.
3) Choke valve shaft

Downloaded from www.Manualslib.com manuals search engine

Check for wear and twist.

4) Power piston
Check for correct operation.

5) Float
Check for deformation, damage of seat and stopper, and wear of float shaft hole.

6) Needle valve
Check for damage and correct contact against valve seat.

7) Filter
Check for deformation and damage.

8) Air bleed
Check for damage on thread and groove.

9) Choke spring
Check for rust and deterioration.

10) Accelerating pump cover
Check for crack and damage.

2) Float Chamber

1) Float chamber body
Check for cracks, damage on mating surfaces, damage on threads, wear of auxiliary valve shaft hole, and wear of accelerating pump cylinder.

2) Injector weight
Check for damage and proper contact against seat.

3) Ball
Check for damage.

4) Piston return spring
Check for rust.

5) Jet
Check for damage on thread and groove.

6) Emulsion tube
Check for deformation.

7) Accelerating pump piston
Check for damage and wear.

8) Power valve
Check for correct operation and damage on thread and groove.

3) Throttle Chamber

1) Throttle chamber body
Check for cracks, damage on mating surfaces, wear of throttle valve shaft hole and damage on thread.

2) Throttle valve
Check for deformation.

3) Throttle valve shaft
Check for wear, twist, and damage on thread.

4) Idle mixture adjusting screw
Check for damage on tip of the screw.

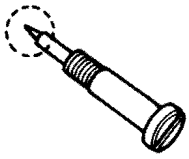

Fig. 4-17 Idle mixture adjusting screw

5) Springs
Check for permanent set and rust.

4) Others

1) Washer
Check for deformation and damage.

2) Linkage
Check for wear of each sliding part.

3) Passages
Check for clogging.

6. Assembly

1) Precautions

1) Wash all parts with clean gasoline before reassembly.
2) Use new gaskets, lock plate and cotter pins.
3) Use wrenches and screwdrivers of proper size to prevent damaging the parts.

2) Assembling Choke Chamber

1) Install switch vent solenoid valve with gasket and three screw & washer assemblies.

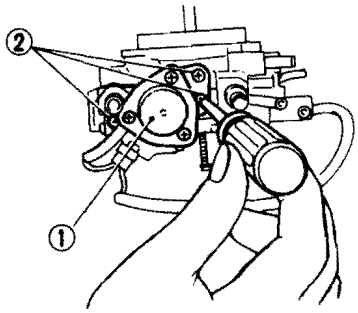

1 Switch vent solenoid valve
2 Screw

A8-297

Fig. 4-18

2) Install primary and secondary slow air bleeds.

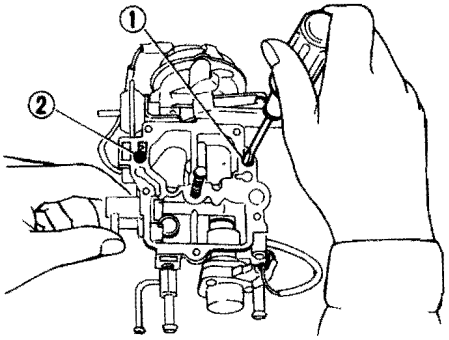

1 Primary slow air bleed
2 Secondary slow air bleed

A8-296

Fig. 4-19

3) Install needle valve with 10 mm washer.

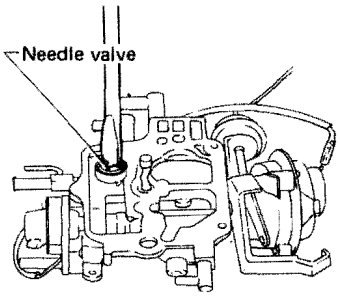

A8-496

Fig. 4-20

4) Install float with float shaft, and adjust the float level.

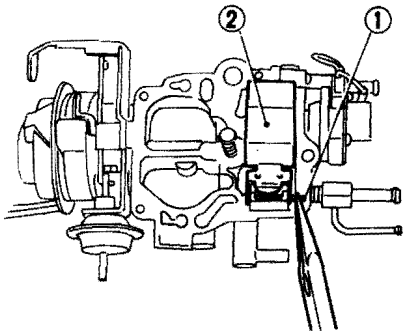

1 Float shaft
2 Float

A8-294

Fig. 4-21

Downloaded from www.Manualslib.com manuals search engine

5) Install accelerating pump piston and pump cover.

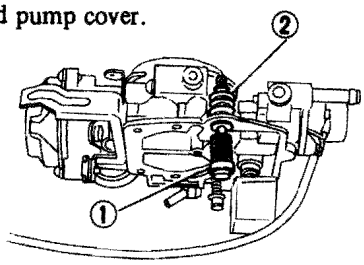

1 Accelerating pump piston
2 Pump cover

A8-429

Fig. 4-22

3) Assembling Float Chamber

1) Install power valve with 8 mm washer.

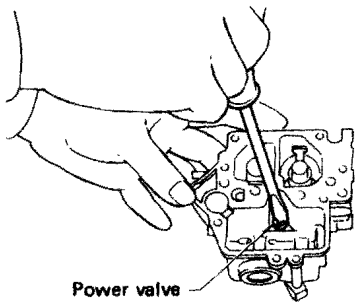

A8-302

Fig. 4-23

2) Install primary and secondary main jets and float chamber drain plugs with 9 mm washers and install lock plate.

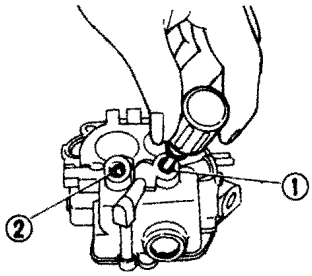

1 Primary main jet
2 Secondary main jet

A8-301

Fig. 4-24

3) Install primary and secondary slow jets and then install plugs.

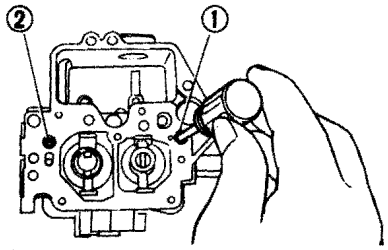

1 Primary slow jet
2 Secondary slow jet

A8-300

Fig. 4-25

4) Install primary and secondary main air bleeds.

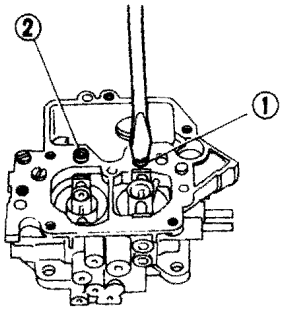

1 Primary main air bleed
2 Secondary main air bleed

A8-299

Fig. 4-26

4) Assembling Throttle Chamber

1) Install adjusting plate, lever, washer, sleeve, etc. onto throttle valve shaft as shown in the figure.

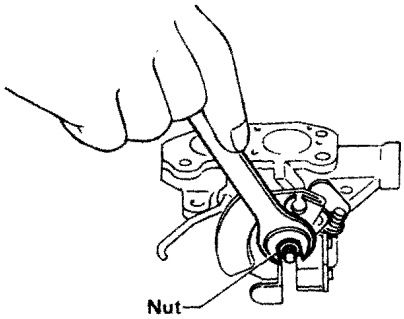

A8-304

Fig. 4-27

2) Install idle adjusting screw, spring, 5 mm washer and O ring.

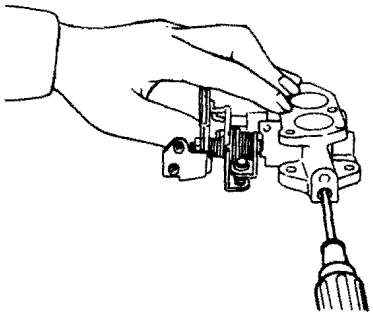

A8-303

Fig. 4-28

3) Install throttle adjusting screw and spring.

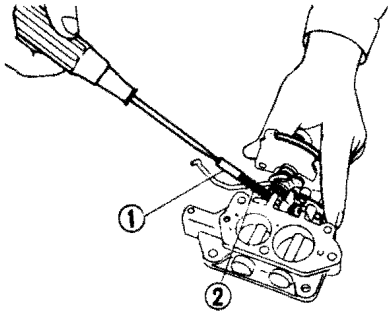

1 Throttle adjusting screw
2 Spring

A8-155

Fig. 4-29

5) Bringing Float Chamber and Throttle Chamber Together

1) Put float chamber and throttle chamber together with two screw & washer assemblies, one screw, washer and insulator and gaskets.

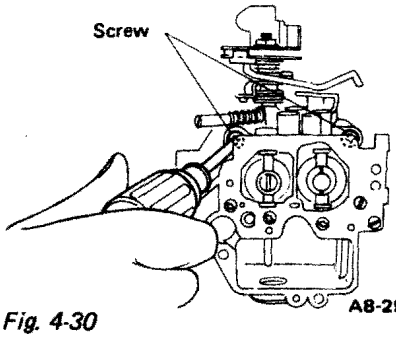

A8-292

Fig. 4-30

2) Install secondary diaphragm together with gasket and connect with snap ring.

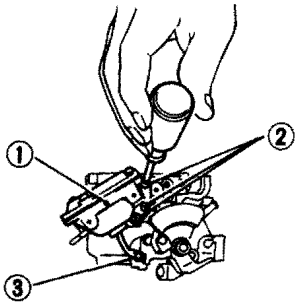

1 Secondary diaphragm
2 Screw
3 Snap ring

A8-430

Fig. 4-31

Downloaded from www.Manualslib.com manuals search engine

3) Install injector weight, ball and piston return spring.

NOTE:
Install return spring with its hook portion facing downward.

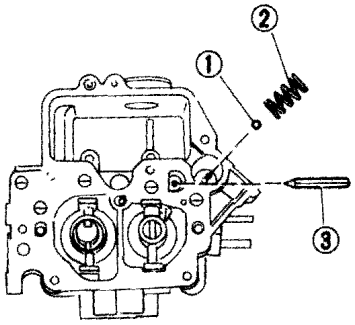

1 Ball
2 Piston return spring
3 Injector weight

A8-298

Fig. 4-32

6) Installing Choke Chamber

1) Position choke chamber on float chamber with gasket between them and tighten with five screw & washer assemblies.

NOTE:
a. Tighten the screw near the accelerating pump together with harness clamp.
b. Run the harnesses for anti-dieseling switch and for switch vent solenoid valve above solenoid valve as shown in the figure.

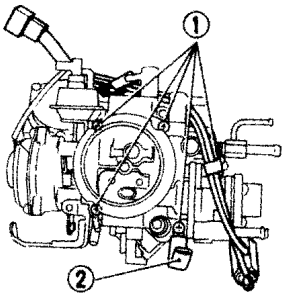

1 Screw & washer assembly
2 Clamp

A8-289

Fig. 4-33

2) Connect anti-dieseling switch with 12.2 mm washer to float chamber.

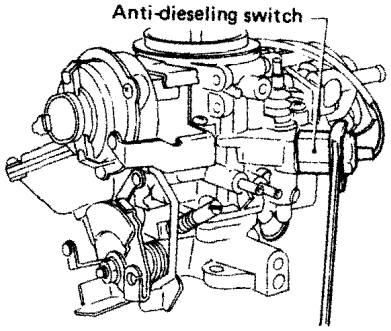

A8-288

Fig. 4-34

3) Install return spring of return plate.

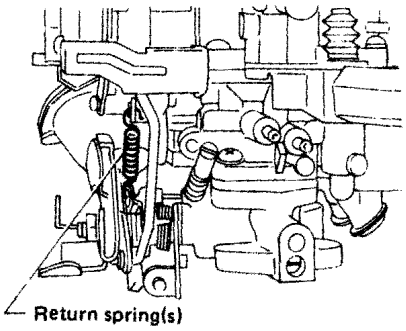

A8-287

Fig. 4-35

7) Installing Linkage

1) Install cam connecting rod with cotter pins and plain washers.

NOTE:
Position the acute angle side of the connecting rod upward.

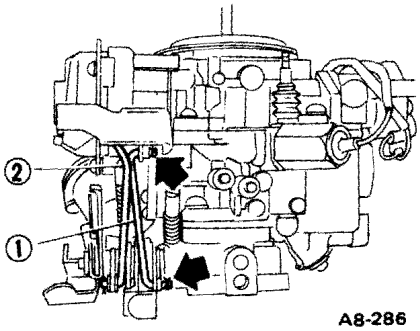

A8-286

1 Cam connecting rod
2 Pump connecting rod

Fig. 4-36

2) Connect accelerating pump connecting rod to pump lever by inserting the rod end into hole in pump lever.

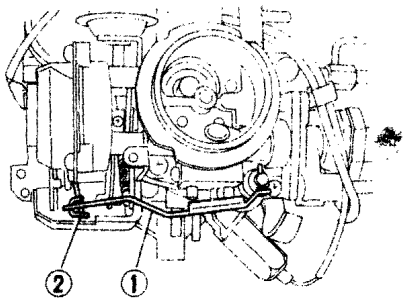

1 Pump lever
2 Pump connecting rod

A8-431

Fig. 4-37

3) Install pump lever with pump lever shaft, spring, plain washer, and spring washer.

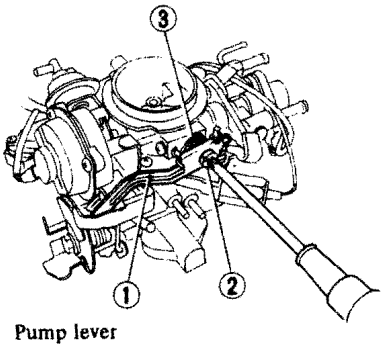

1 Pump lever
2 Pump lever shaft
3 Spring

A8-432

Fig. 4-38

4) Install throttle return spring.

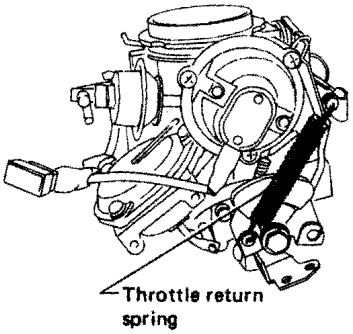

A8-433

Fig. 4-39

NOTE:
Make sure that all the linkages operate smoothly.

Downloaded from www.Manualslib.com manuals search engine

7. Check and Adjustment

1) Automatic Choke Mechanism Adjustment

1) When the choke is closed, the primary throttle valve is slightly opened from its fully closed position by the action of the fast idle cam and the linkage. At this time, the top of the cam adjusting lever rests on the first (highest) step of the fast idle cam. This angle is called fast idle opening angle, which is suitable for starting the engine in cold weather. In this condition, measure the clearance G_1 indicated in the figure which should be as specified in the table.

If the clearance G_1 is not to specification, adjust by means of the fast idle adjusting screw.

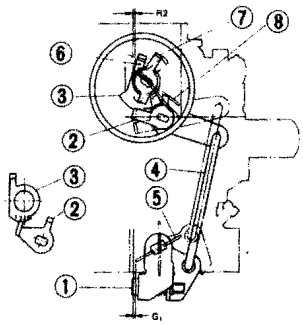

1 Fast idle adjusting screw
2 Cam adjusting lever
3 Fast idle cam
4 Cam connecting rod
5 Throttle valve
6 Bend this pawl to adjust choke valve opening angle
7 Choke lever
8 Choke valve

A8-170

Fig. 4-40 Fast idle mechanism

	DCP306-17	DCP306-18 DCP306-21	DCP306-19 DCP306-22
Clearance G_1	0.98 mm (0.0386 in)	1.22 mm (0.0480 in)	1.34 mm (0.0528 in)
Fast idle opening angle	15°	17.5°	18.5°

2) Check of thermo vacuum valve (II)

Connect vinyl tubes to output ports of thermo vacuum valve (II).

After soaking valve in cooled water [approx. below 10°C (50°F)] for some time, heat the water.

Below air into the valve as shown in the illustration, and confirm that the valve opens or closes in response to the specified temperature.

NOTE:
Do not allow water to get into the thermo vacuum valve (II).

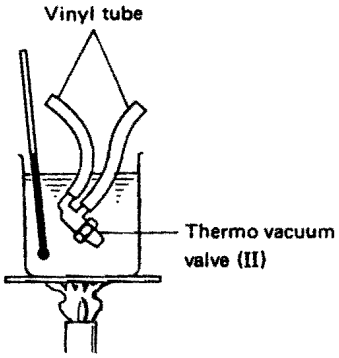

A10-116

Fig. 4-41

Thermo vacuum valve (II)	
Fully open	Fully closed
below 14°C (57°F)	above 20°C (68°F)

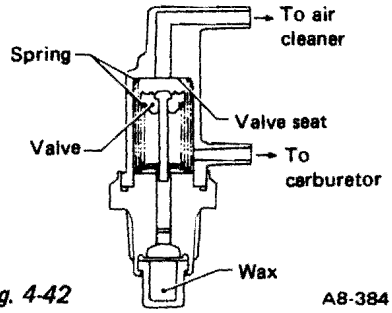

Fig. 4-42 A8-384

2) Check of Solenoid Valve (III)

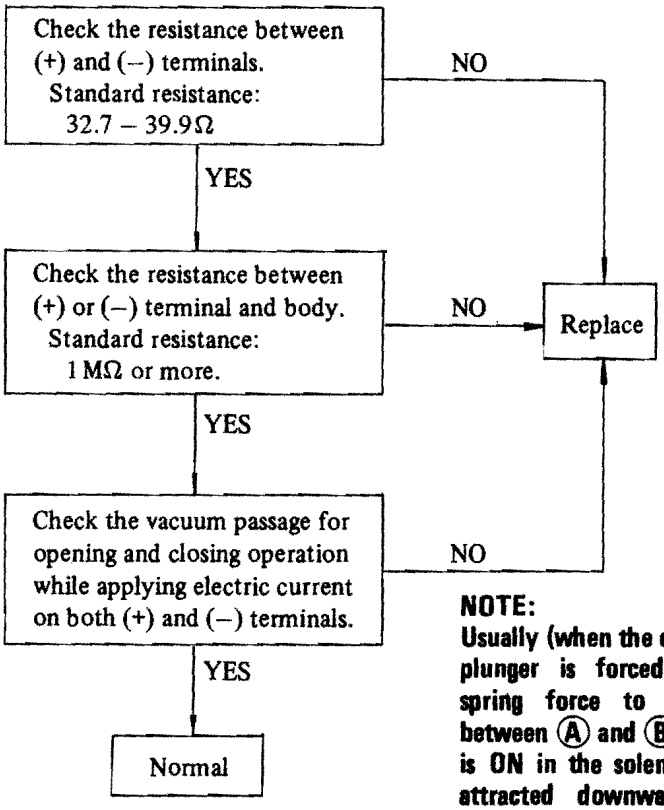

NOTE:
Usually (when the current is OFF), the plunger is forced upwards by the spring force to close the passage between Ⓐ and Ⓑ. When the current is ON in the solenoid, the plunger is attracted downwards to open the passage between Ⓐ and Ⓑ.

Downloaded from www.Manualslib.com manuals search engine

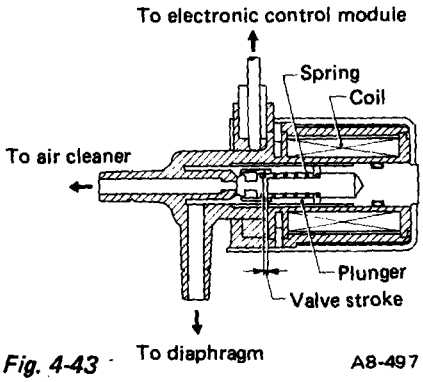

Fig. 4-43

3) Adjustment for Interlock of Primary and Secondary Throttle Valves

The primary and secondary throttle valves are interlocked so that the secondary throttle valve starts to open when the primary throttle valve is opened to a certain degree. This opening angle of the primary throttle valve and the clearance G_2 should be as follows.

G_2	6.00 mm (0.2362 in)
θ	49°

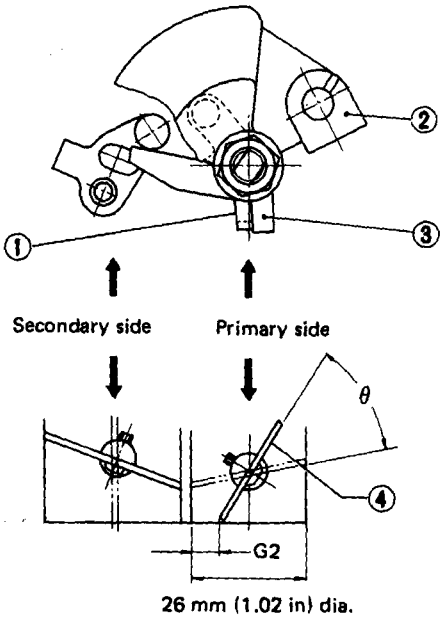

1 Adjust plate
2 Throttle lever
3 Return plate
4 Primary throttle valve

Fig. 4-44 Primary and secondary throttle valve interlock

4) Fuel Level

The fuel level in the carburetor can be checked through the sight glass of the float chamber. A fuel level within a range of 1.5 mm (0.059 in) above or below the point mark is normal. If the fuel level is out of this range, adjust as specified in the following paragraphs 1) and 2).

NOTE:
After completion of fuel level adjustment, confirm it through the sight glass.

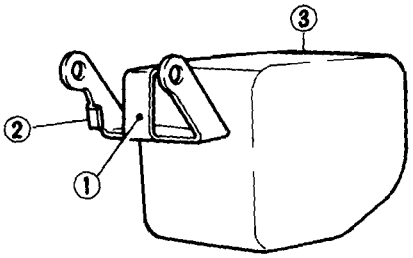

1 Float seat
2 Float stopper
3 Float

Fig. 4-45

1) Adjusting float level
Remove the choke chamber and turn it upside down. If the clearance H indicated in the figure is as specified below when the float seat comes in contact with the valve stem, the float level is normal. If not, adjust the level by bending the float seat.

Clearance H	11.0 – 11.5 mm (0.433 – 0.453 in)

2) Adjusting effective needle valve stroke
If the clearance L between the float seat and valve stem with the float fully lifted is as specified below, the effective stroke is normal. If not, adjust by bending the float stopper.

Clearance L	1.3 – 1.7 mm (0.051 – 0.067 in)

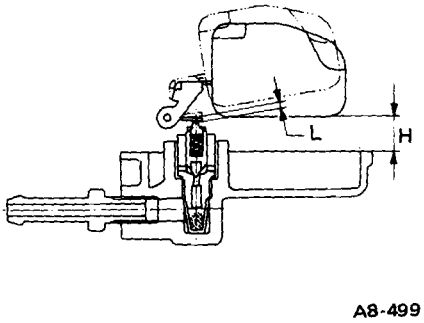

Fig. 4-46

8. Installation

1) Install carburetor with two gaskets and an insulator on intake manifold.
2) Connect accelerator cable ① to throttle lever.
3) Connect harness connector ②.
4) Install duty solenoid valve connector clamp ③.
(All California models and non-4WD of non-California models)
5) Connect hoses to carburetor.

a. From thermo vacuum valve (II) to main diaphragm ④.
(All Canada models and 4WD of non-California models)
b. From solenoid valve (III) to main diaphragm ④.
(All California models and non-4WD of non-California models)
c. From control air cleaner to secondary main air bleed.
(Non-4WD of non-California models – High altitude configuration only)
d. From air cleaner to secondary main air bleed.
(4WD of non-California models – High altitude configuration only)

6) Connect hoses for duty solenoid valves.
(All California models and non-4WD of non-California models)

a. From duty solenoid valve (slow) to carburetor ⑥.
b. From duty solenoid valve (main) to carburetor ⑦.

7) From air cleaner to carburetor ⑥, ⑦.
(4WD of non-California models – High altitude configuration only)
8) Connect vacuum hoses.

a. From intake manifold to main diaphragm ⑧.
b. From distributor to advance port ⑨.

Downloaded from www.Manualslib.com manuals search engine

c. From E.G.R. valve to E.G.R. port (10).
d. From vacuum switch (H) to retard port (11).
(All California models and non-4WD of non-California models)
9) Connect hoses for fuel.
a. Fuel hose (12).
b. Fuel return hose (13).
c. Carburetor air vent hose (14).
10) Install air cleaner.
11) Replenish the coolant.

NOTE:

a. After reinstallation, make sure that no leakage exists around the mating parts and that the vacuum system operates correctly.

b. Perform "Engine idle speed adjustment" and "Engine idle mixture adjustment".

Front view

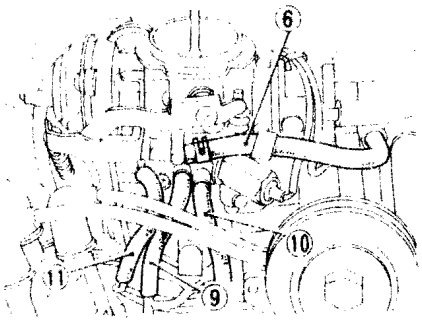

A8-385

Rear view

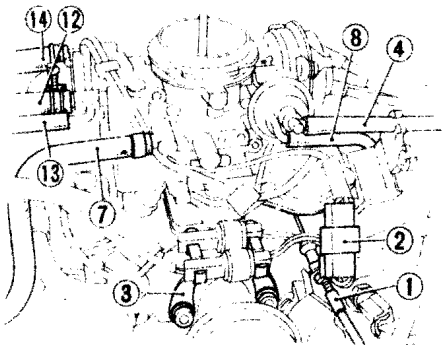

A8-386

Fig. 4-47

4-3. Carter-Weber Carburetor

1. Construction

The carburetor is a single-barrel downdraft type consisting of 5 systems which enable it to provide the correct fuel and air mixture under various operating conditions and loads. It also incorporates a pulsing air control solenoid allowing it to interface with an electronic feedback fuel control system.

The carburetor has 5 systems as follows.

1. Float system
2. Low-speed system
3. High-speed system
4. Accelerating pump system
5. Choke system

1) Float System

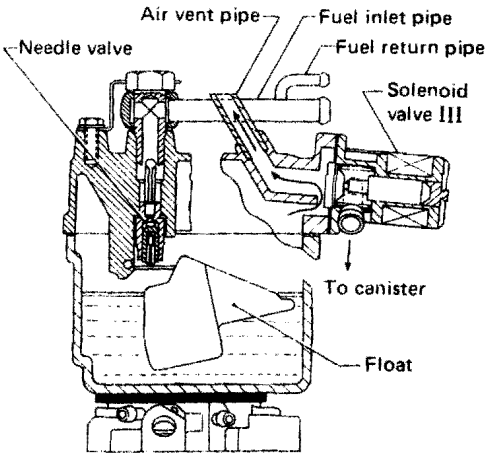

A8-387

Fig. 4-48 Float system

Downloaded from www.Manualslib.com manuals search engine

2) Low-Speed System

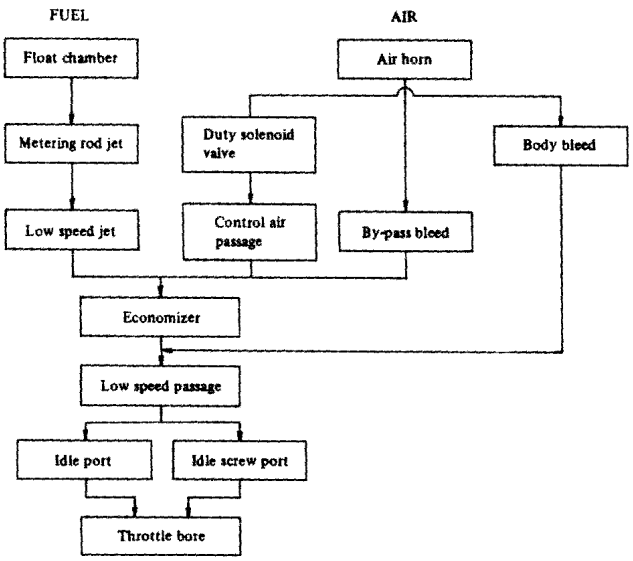

A8-388

Fig. 4-49 Fuel and air flow in low-speed system

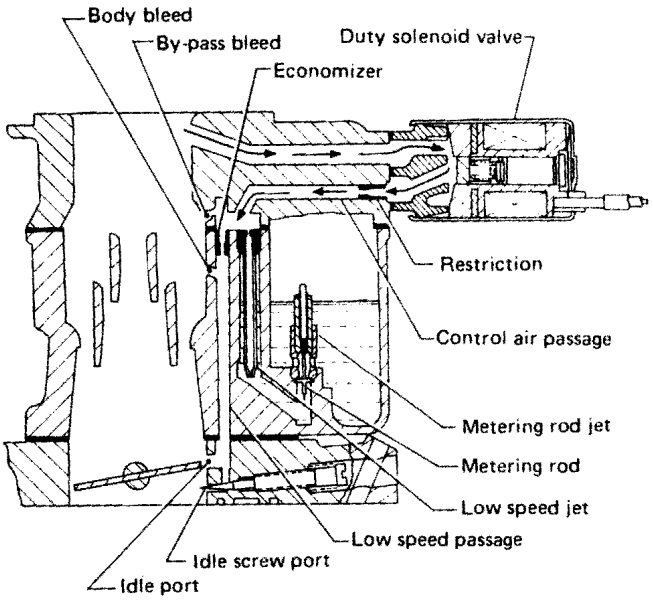

A88-389

Fig. 4-50 Low-speed system

3) High-Speed System

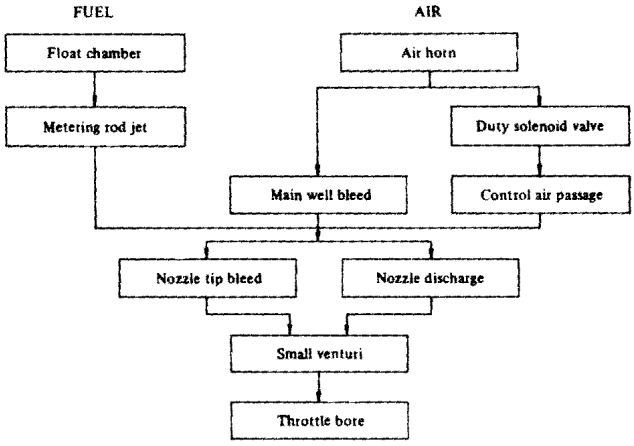

A8-390

Fig. 4-51 Fuel and air flow in high-speed system

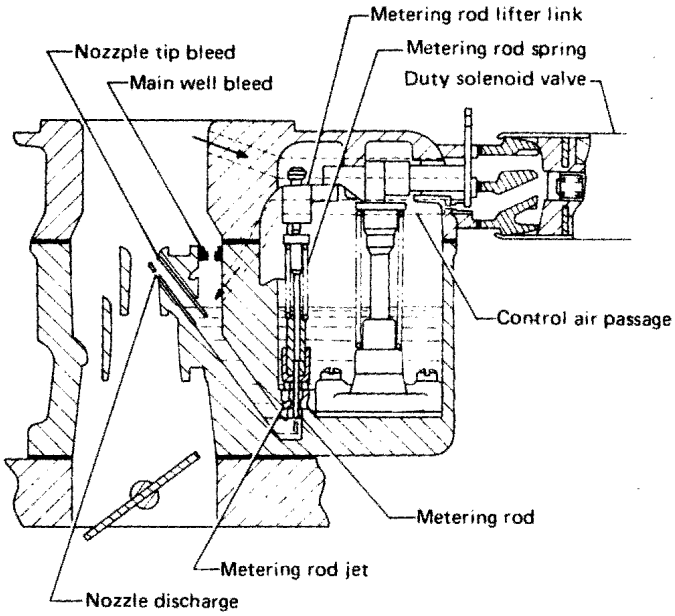

A9-391

Fig. 4-52 High-speed system

Downloaded from www.Manualslib.com manuals search engine

4) Accelerating Pump System

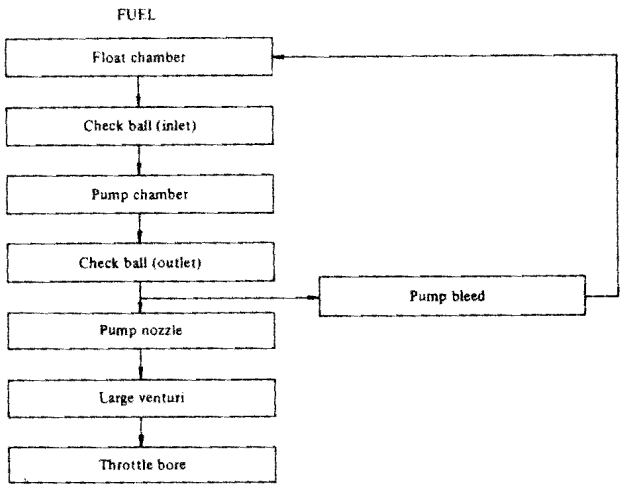

A8-392

Fig. 4-53 Fuel flow in accelerating pump system

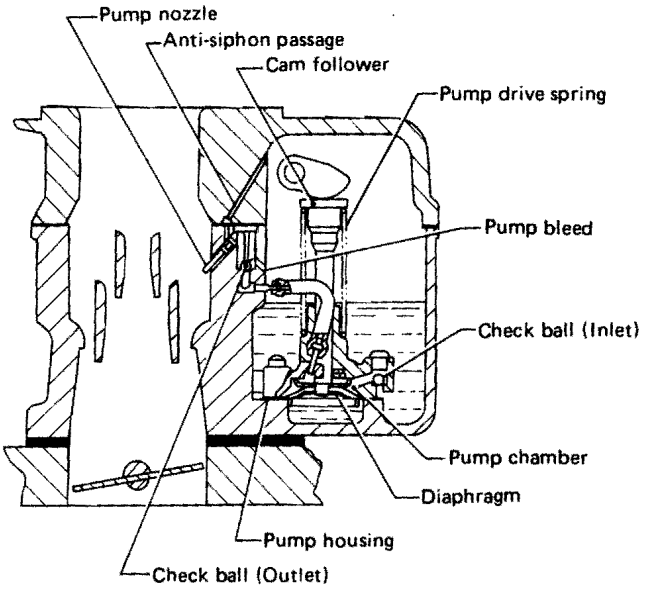

A8-393

Fig. 4-54 Accelerating pump system

5) Choke System

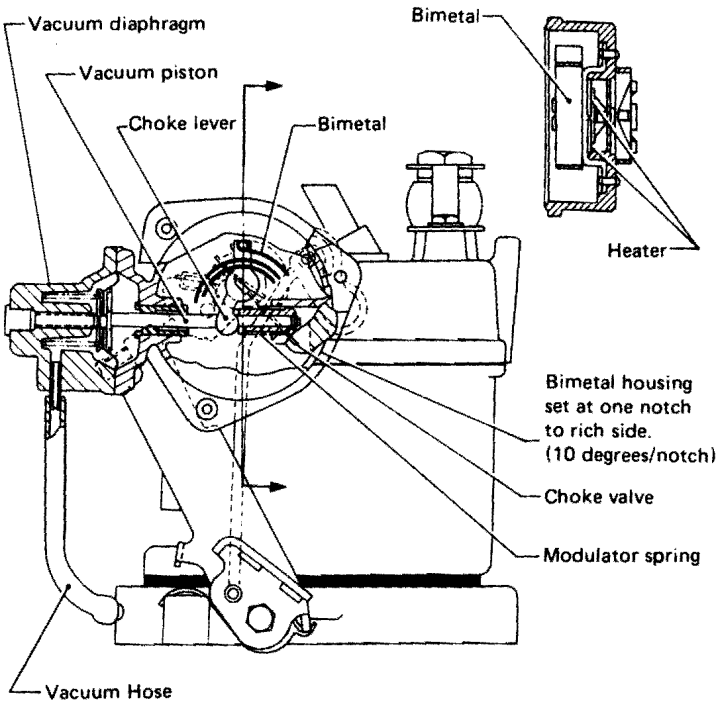

A8-394

Fig. 4-55 Choke system

Downloaded from www.Manualslib.com manuals search engine

2. Component Parts

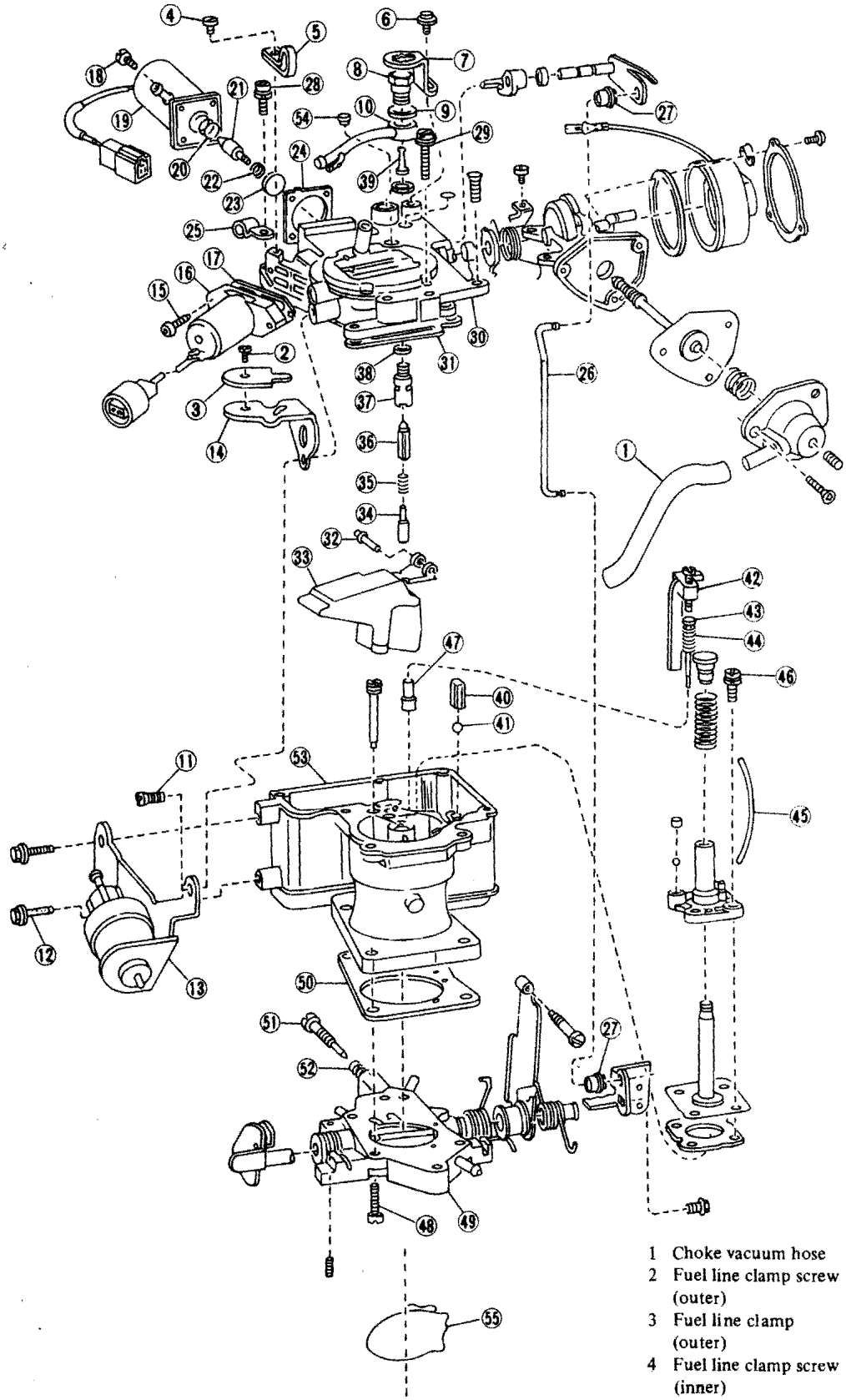

1 Choke vacuum hose
2 Fuel line clamp screw (outer)
3 Fuel line clamp (outer)
4 Fuel line clamp screw (inner)
5 Fuel line clamp (inner)
6 Banjo lock screw
7 Banjo lock
8 Banjo fuel bolt
9 Banjo gasket
10 Banjo fuel line ASSY
11 Fuel line bracket attaching screw
12 Idle stop solenoid attaching screw
13 Idle stop solenoid
14 Fuel line bracket
15 Feedback solenoid attaching screw
16 Feedback solenoid
17 Feedback solenoid gasket
18 Bowl vent solenoid attaching screw
19 Bowl vent solenoid
20 Bowl vent armature spring
21 Bowl vent armature
22 Bowl vent armature spring retainer
23 Bowl vent valve
24 Bowl vent gasket
25 Wire support(s)
26 Connector rod
27 Connector rod bushing
28 Air horn attaching screw (short)
29 Air horn attaching screw (long)
30 Air horn
31 Air horn gasket
32 Float hinge pin
33 Float
34 Fuel inlet needle pin
35 Fuel inlet needle pin spring
36 Fuel inlet needle
37 Fuel inlet needle seat
38 Fuel inlet needle seat gasket
39 Fuel inlet filter
40 Pump discharge weight
41 Pump discharge check ball
42 Lifter link
43 Metering rod
44 Metering rod spring
45 Pump delivery hose
46 Pump assembly attaching screw
47 Main jet
48 Flange attaching screws
49 Flange
50 Flange gasket
51 Idle mixture screw
52 Idle mixture screw spring
53 Body casting
54 Metering rod adjustment hole plug
55 Flange O-ring

A8-397

Fig. 4-56

Downloaded from www.Manualslib.com manuals search engine

3. On-car Service

Fast Idle Adjustment

NOTE:
Prior to adjustment of fast idle, ensure that idle speed and idle mixture have been adjusted properly.

1) Warm up the engine sufficiently. Ensure that the auto-choke is fully open.
2) Engage the fast idle lever with 3rd cam latch.
3) Adjust the fast idle adjusting screw until idle speed is 2,000 rpm.

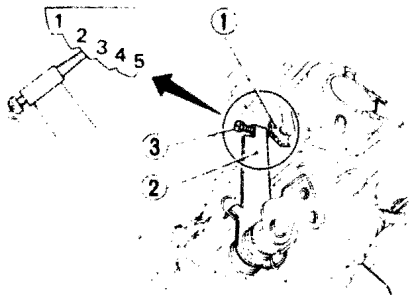

1 Cam
2 Fast idle lever
3 Fast idle adjusting screw

A8-422

Fig. 4-57

4. Removal

1) Air cleaner.
2) Disconnect hoses for fuel.
a. Fuel hose
b. Fuel return hose
c. Carburetor air vent hose
3) Disconnect vacuum hoses.
a. Distributor advance
b. E.G.R.
4) Disconnect harness connectors.
5) Disconnect accelerator cable from throttle lever.
6) Vent hose and connector with carburetor spacer and gasket.
7) Drain coolant so as to prevent it from flowing out.
8) Two carburetor attaching nuts and carburetor.

5. Disassembly

1) Precautions

1) Use wrenches and screwdrivers of proper size to remove nuts and screws. Be careful not to cause burrs or damage.
2) Keep disassembled parts in order so not to mix them up when reassembling.
3) Use clean gasoline and compressed air to clean the jets and fuel passages. Never use a wire or cloth.
4) When cleaning carburetor, do not put any plastic or rubber parts into the carburetor cleaning solution. (cold parts cleaner)

2) Removing Fuel Line

1) Choke vacuum hose.
2) Fuel line clamp (outer).
3) Fuel line clamp (inner).
4) Banjo lock.
5) Banjo fuel bolt.
6) Banjo fuel line assembly and two gaskets.

3) Removing Idle Stop Solenoid

1) Idle stop solenoid.
2) Fuel line bracket.

4) Removing Feedback Solenoid and Bowl Vent Solenoid

1) Feedback solenoid and gasket.
2) Bowl vent solenoid and gasket.
3) Pick-up armature and spring from bowl vent solenoid.

5) Removing Air Horn

1) Connector rod.
2) Air horn by removing seven screws.
3) Float by pulling out float hinge pin.
4) Air horn gasket.
5) Fuel inlet needle pin, needle pin spring and needle.
6) Needle seat, gasket and filter.

6) Removing Metering Rod and Accelerating Pump

1) Lifter link, metering rod and spring.
2) Pump hose.
3) Main jet.

NOTE:
Use Main Jet Driver (498167100).

4) Pump housing ASSY.

7) Separating Body Casting and Flange

1) Pump discharge check ball and weight.
2) Separate body from flange by removing four screws.
3) Flange gasket.
4) Tamper-proof pin.
5) Idle mixture screw and spring.

6. Inspection

Disassembled components should be washed in clean gasoline before inspection. Particularly small holes and hollows such as fuel passage must be blown with compressed air to remove dust and dirt.

Do not use drills or wires to clean the small passages, otherwise the carburetor performance may be adversely affected due to cut or deformation.

1) Air Horn

1) Air horn casting
Check for cracks or damage on mating surfaces, damage on threads and excessive wear of choke shaft and countershaft contact areas.
2) Choke valve
Check for deformation and rust.
3) Choke shaft
Check for wear and twist.
4) Countershaft
Check for wear.
5) Float
Check for deformation, damage or cracking, excessive wear on needle contact area, float pin hole and pin.
6) Needle valve and seat
Check for damage and correct contact between needle and seat.
7) Filter
Check for deformation and damage.
8) Choke break diaphragm
Check for cracks or other damage.
9) Choke coil
Check for rust, wear or set.
10) Accelerator pump cam
Check for cracks, wear or damage.
11) Modulation bushings and spring
Check for excessive wear and insure parts more freely.
12) Fast idle cam bushing
Check for excessive wear.

Downloaded from www.Manualslib.com manuals search engine

2) Main Body

1) Body casting
Check for cracks or damage on mating surfaces and damage on threads.
2) Accelerating check balls
Check for damage and proper contact against seat.
3) Accelerating discharge weight
Check for wear.
4) Accelerating pump and metering rod springs
Check for rust or damage.
5) Main jet
Check for damage on thread, groove and seat and for wear on guide.
6) Low-speed jet tube
Check for deformation.
7) Accelerating pump diaphragm
Check for cracks or damage.
8) Accelerating pump seal
Check for wear or damage.
9) Accelerating pump delivery hose
Check for cracks or damage.
10) Lifter link
Check for wear or warpage.
11) Metering rod
Check for wear or bends.

3) Throttle Flange

1) Flange casting
Check for cracks or damage on mating surfaces, damage on threads and wear of throttle valve shaft holes.
2) Throttle valve
Check for deformation.
3) Throttle valve shaft
Check for wear, twist or damage to threads.
4) Idle mixture adjusting screw
Check for damage on the tip of the screw.
5) Springs
Check for permanent set or rust.

4) Others

1) Washers
Check for deformation and damage.
2) Passages
Check for clogging.
3) Linkage
Check for wear of all moving parts.

7. Assembly

1) Precautions

1) Wash all parts with clean gasoline before reassembly.
2) Use new gaskets, connector link bushing and pump hose.
3) Use wrenches and screwdrivers of proper size to prevent damaging the parts.

2) Assembling Flange and Body Casting

1) Install idle mixture screw and spring in flange.

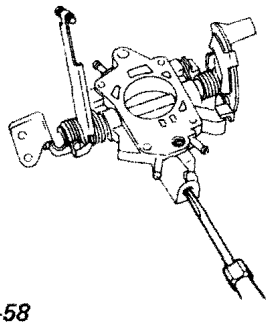

Fig. 4-58 A8-398

2) Position flange on body casting with gasket between them and tighten with four screws.

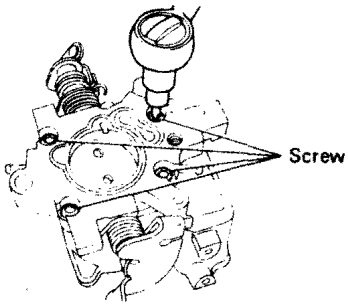

Fig. 4-59 A8-399

3) Assembling Body Casting

1) Install pump housing ASSY.

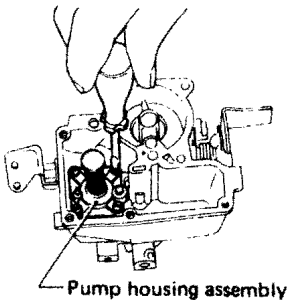

Fig. 4-60 A8-400

2) Install pump hose.

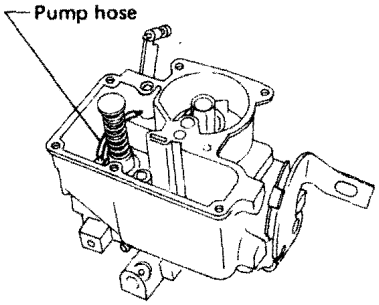

Fig. 4-61 A8-401

3) Install main jet by using Main Jet Driver (498167100).

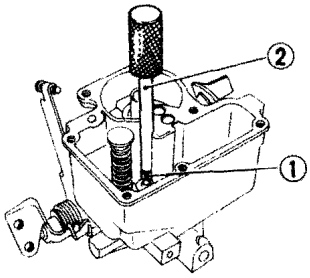

1 Main jet
2 Main Jet Driver (498167100)

Fig. 4-62 A8-402

4) Install lifter link, metering rod and spring.

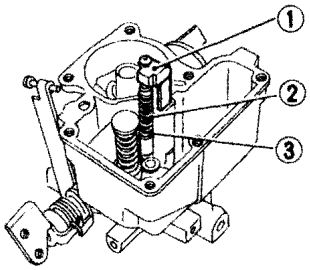

1 Lifter link
2 Metering rod
3 Spring

Fig. 4-63 A8-403

5) Install pump discharge check ball and weight.

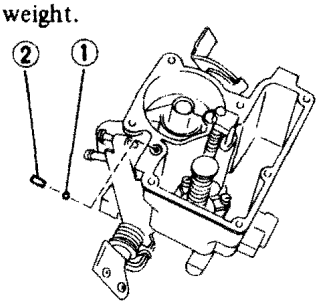

1 Pump discharge check ball
2 Weight

Fig. 4-64 A8-404

Downloaded from www.Manualslib.com manuals search engine

4) Assembling Air Horn, and Bringing Air Horn and Body Casting Together

1) Install needle seat with fuel filter and washer.

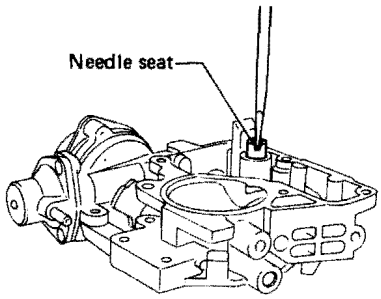

A8-405

Fig. 4-65

2) Install fuel inlet needle with spring and needle pin.

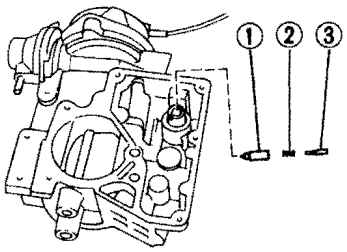

1 Fuel inlet needle
2 Spring
3 Needle pin

A8-406

Fig. 4-66

3) Install float.

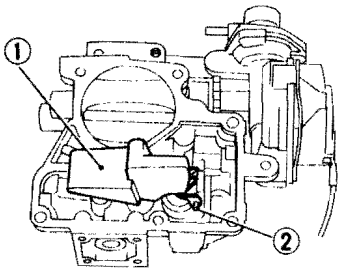

1 Float
2 Float hinge pin

A8-407

Fig. 4-67

4) Check float adjustment.

NOTE:
Refer to 8 "Check and Adjustment".

5) Put air horn gasket on air horn.

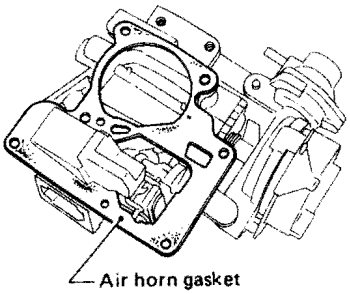

A8-408

Fig. 4-68

6) Position air horn on body casting with gasket and tighten seven screws.

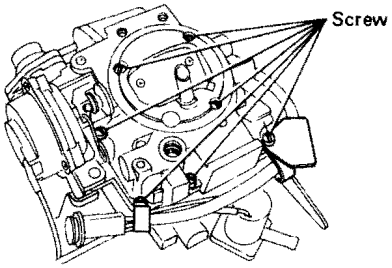

Fig. 4-69 A8-409

7) Install connector rod with rod bushings.

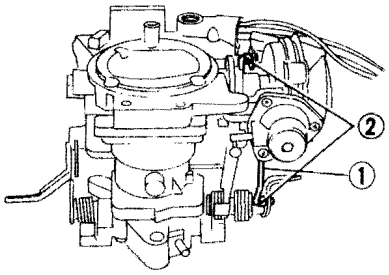

1 Connector rod
2 Rod bushing

A8-410

Fig. 4-70

5) Installing Feedback Solenoid and Bowl Vent Solenoid

1) Put bowl vent armature, spring retainer and valve together.

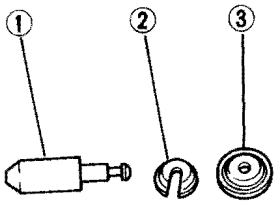

1 Bowl vent armature
2 Spring retainer
3 Valve

A8-411

Fig. 4-71

2) Put spring and bowl vent armature assembled in 1) into bowl vent solenoid.

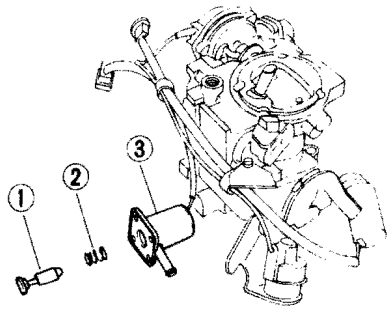

1 Bowl vent armature
2 Spring
3 Bowl vent solenoid

A8-412

Fig. 4-72

3) Install bowl vent solenoid assembled in 2) with gasket.

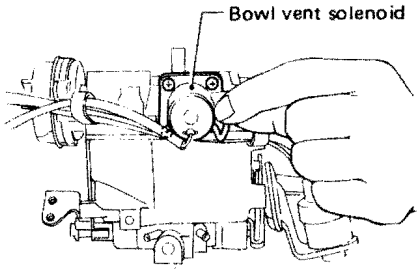

A8-413

Fig. 4-73

4) Install feedback solenoid with gasket.

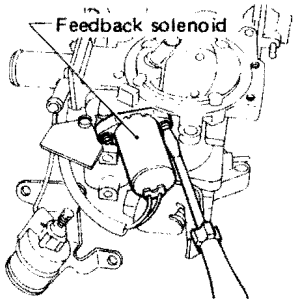

A8-414

Fig. 4-74

Downloaded from www.Manualslib.com manuals search engine

6) Installing Idle Stop Solenoid and Fuel Line

1) Install idle stop solenoid with fuel line bracket.

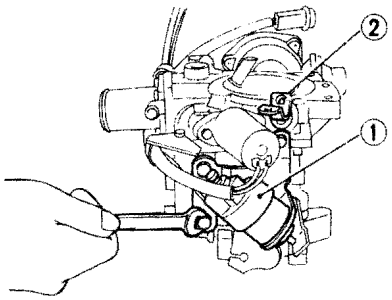

1 Idle stop solenoid
2 Fuel line bracket

A8-415

Fig. 4-75

2) Position banjo gasket, banjo fuel line assembly and second banjo gasket on air horn.

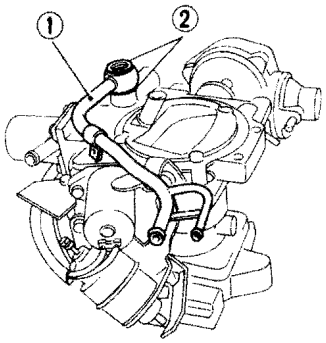

1 Banjo fuel line assembly
2 Banjo gasket

A8-416

Fig. 4-76

3) Put banjo bolt on banjo fuel line assembly and tighten lightly.

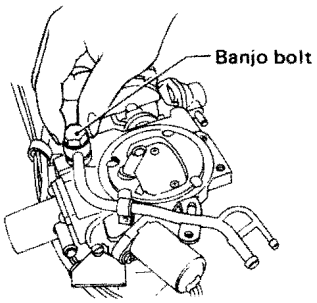

A8-417

Fig. 4-77

4) Install fuel line clamp (outer) and fuel line clamp (inner).

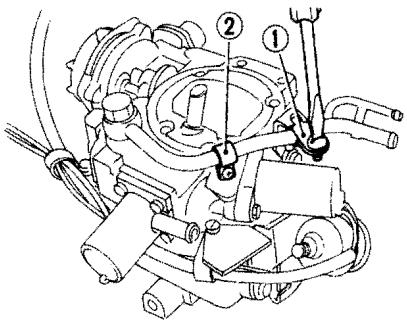

1 Fuel line clamp (outer)
2 Fuel line clamp (inner)

Fig. 4-78 A8-418

5) Tighten banjo bolt to the specified torque.

Torque	34 – 40 N·m (3.5 – 4.1 kg·m, 25 – 30 ft·lb)

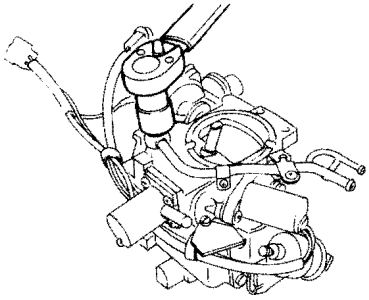

Fig. 4-79 A8-419

6) Install banjo lock.

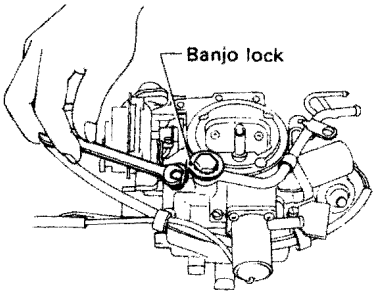

Fig. 4-80 A8-420

7) Install choke vacuum hose.

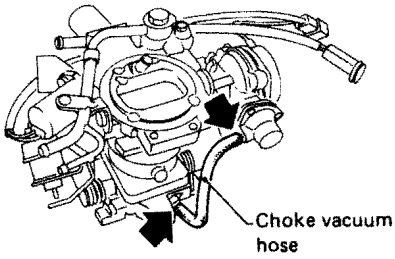

Fig. 4-81 A8-421

NOTE:
Make sure that all the linkages operate smoothly.

8. Check and Adjustment

Float Setting

1) Detach the air horn gasket, then position the float at the air horn.
2) Turn the top side of the air horn down to free the float. At this point, measure the distance shown in the figure below.

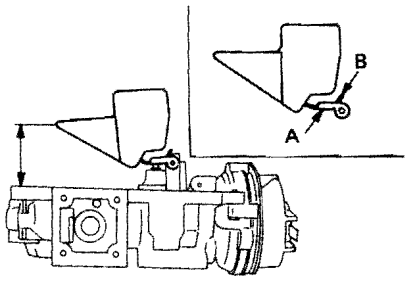

Fig. 4-82 A8-423

3) If the distance is outside the specifications, bend portion (A) to adjust the distance.
4) After the distance has been adjusted properly, turn the air horn right side up to lower the float. Measure the distance from the lower surface of the air horn to the tip end of the float to ensure that it is more than 38 mm (1.50 in); If necessary, bend portion (B). The needle must be free while adjusting the distance.

9. Installation

1) Install carburetor with two gaskets and an insulator on intake manifold.
2) Install vent hose, connector and spacer with gasket, and then connect hoses.
3) Connect accelerator cable to throttle lever.
4) Connect harness connectors.
5) Connect vacuum hoses.
a. Distributor advance
b. E.G.R.
6) Connect hoses for fuel.
a. Fuel hose
b. Fuel return hose
c. Carburetor air vent hose
7) Install air cleaner.
8) Replenish the coolant.

Downloaded from www.Manualslib.com manuals search engine

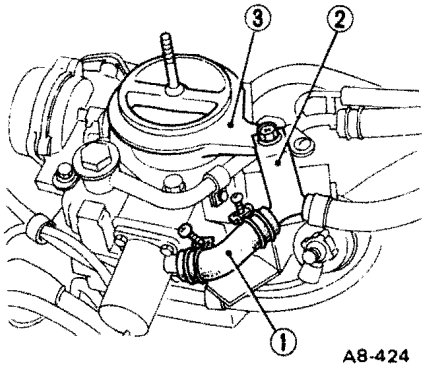

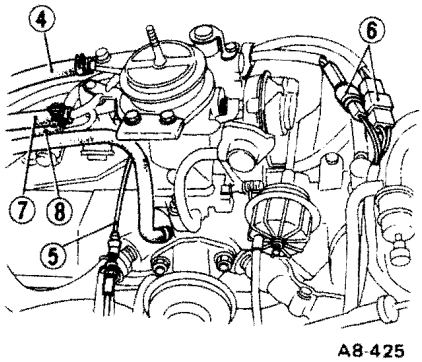

1 Vent hose
2 Connector
3 Spacer
4 Carburetor air vent hose
5 Accelerator cable
6 Harness connectors
7 Fuel hose
8 Fuel return hose

Fig. 4-83

NOTE:

a. After reinstallation, make sure that no leakage exists around the mating parts and that the vacuum system operates correctly.

b. Perform "Engine idle speed adjustment" and "Engine idle mixture adjustment".

Downloaded from www.Manualslib.com manuals search engine

4-4. Component Parts of Fuel System (Except Carburetor)

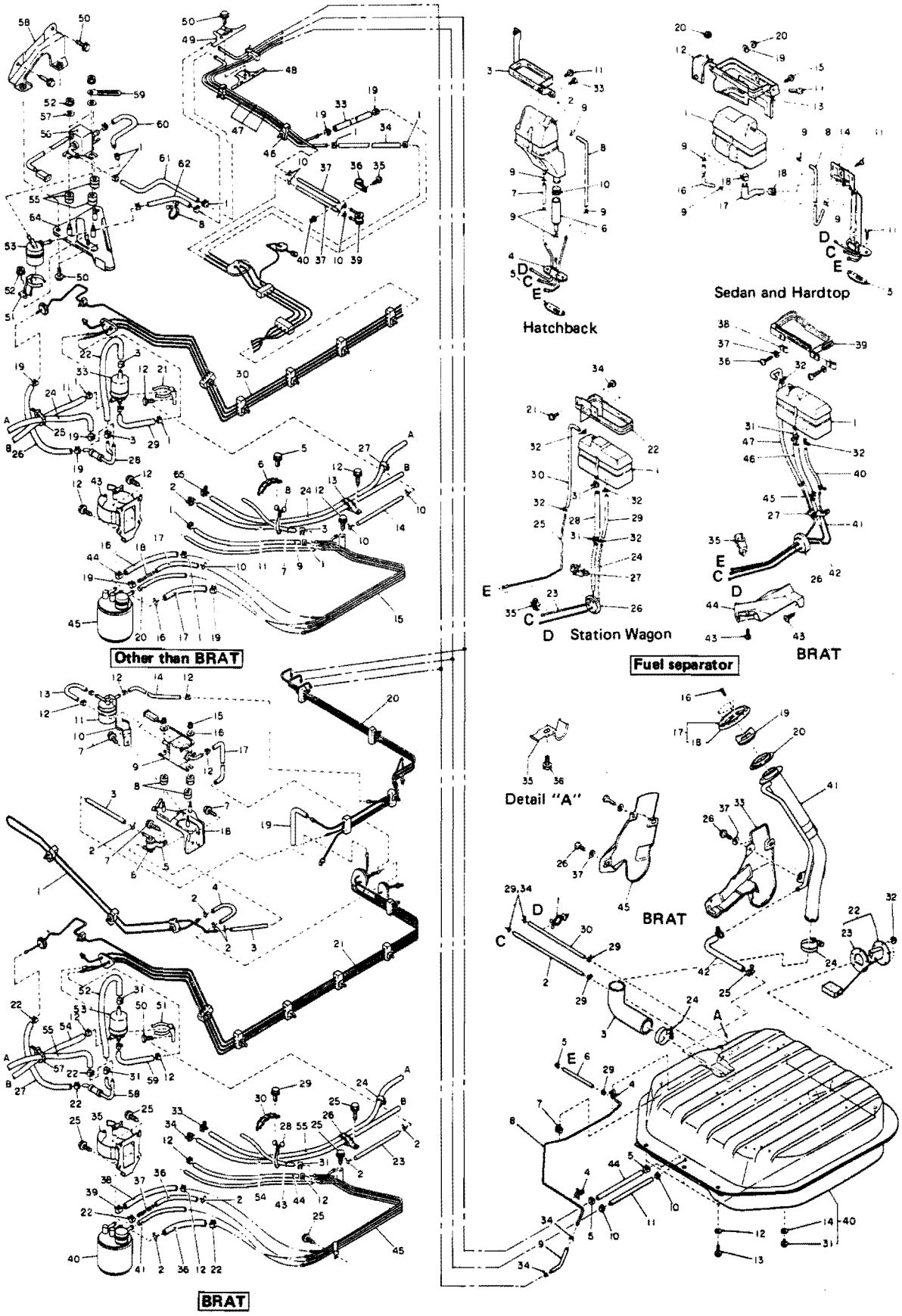

1.
7) S.
while p
8) Deta

NOTE:
Be careful

9) Disc
breathe

Fig. 4-84

A21-183

Downloaded from www.Manualslib.com manuals search engine

Other than BRAT

1 Clip 14
2 Clip delivery
3 Clip A
5 Flange bolt
6 Fuel hose clamp
7 Purge hose
8 Purse lock clip
9 Carburetor evaporator hose
10 Clip 8 - 5
11 Delivery hose
12 Tapping screw
13 Fuel hose clamp
14 Evaporation tube
15 Evaporation pipe CP
16 Carburetor vent hose
17 Pipe canister hose
18 Hose spring
19 Clip
20 Pipe canister hose
21 Fuel filter holder
22 Vapor separator hose
23 Vapor separator
24 Return hose
25 Band
26 Valve pipe hose
27 Return hose clamp
28 Valve ASSY
29 Filter pump hose
30 Pipe ASSY center (L.H.)
33 Return hose
34 Del hose
35 Tapping screw
36 2-way valve bracket
37 Hose
39 2-way valve
40 Screw grommet
43 Bracket CP
44 Clip
45 Canister
46 Clamp
47 Fuel pipe ASSY
48 Pipe lower clamp
49 Pipe upper clamp
50 Bolt
51 Fuel filter holder
52 Flange nut
53 Fuel filter ASSY
54 Pump bracket
55 Grommet
56 Fuel pump ASSY
57 Washer
58 Pump bracket
59 Coating clip
60 Filter-pump hose
61 Pump pipe hose
62 Pipe filter hose
65 Clip

BRAT

1 Pipe ASSY
2 Clip 8 - 5
3 Air breather tube
4 Air breather hose
5 Valve bracket
6 2-way valve
7 Bolt
8 Grommet
9 Fuel pump ASSY
10 Filter holder
11 Fuel filter
12 Clip 14
13 Filter pipe hose
14 Pipe filter hose
15 Nut
16 Washer
17 Pump pipe hose
18 Fuel pump bracket
19 Return hose
20 Pipe ASSY center-R
21 Pipe ASSY center (L.H.)
22 Clip 11
23 Pipe hose
24 Return clamp
25 Tapping screw
26 Clamp
27 Return hose
28 Purse lock clip
29 Flange bolt
30 Clamp
31 Clip
33 Fuel clip
34 Delivery clip
35 Canister bracket
36 Pipe canister hose
37 Spring hose
38 Cab vent hose
39 Clip
40 Canister ASSY
41 Pipe canister hose
43 Purge hose
44 Cab vent hose
45 Pipe CP
50 Tapping screw
51 Fuel filter holder
52 Vapor separator hose
53 Vapor separator
54 Delivery hose
55 Return hose
57 Band
58 Valve AY
59 Filter pump hose

Fuel separator

1 Fuel separator
2 Fuel separator
3 Separator bracket
4 Pipe CP
5 Packing
6 Joint hose
7 Air breather hose
8 Pipe separator hose
9 Clip
10 Clip
11 Tapping screw
12 Separator bracket
13 Separator cover CP
14 Pipe protector CP
15 Flange screw
16 Pipe separator hose
17 Pipe separator hose
18 Air vent clip
19 Washer
20 Flange nut
21 Flange screw
22 Separator bracket
23 Air breather pipe (L.H.)
24 Air breather pipe (R.H.)
25 Air breather pipe (engine)
26 Grommet
27 Clamp
28 Separator hose
29 Air breather tube
30 Separator hose (engine)
31 Fuel system clip
32 Fuel system clip
33 Tapping screw
34 Flange screw
35 Clamp
36 Tapping screw
37 Washer
38 Spring nut
39 Separator bracket
40 Tube
41 Air breather pipe
42 Air breather pipe
43 Tapping screw
44 Pipe protector
45 Air breather pipe
46 Hose
47 Tube

1 Purse lock clip
2 Air breather hose
3 Filter hose
4 Brake pipe clamp
5 Clip
6 Air breather hose
7 Clip
8 Air breather pipe
9 Air breather tube
10 Clip C
11 Tank-pipe hose
12 Washer
13 Bolt ASSY
14 Drain packing
16 Flange screw
17 Filler packing
18 Filler cap packing
19 Filler cap ASSY
20 Fill pipe packing
22 Fuel meter unit
23 Packing
24 Clip
25 Fuel system clip
26 Bolt & washer AY
29 Clip fuel system
30 Air breather hose
31 Flange bolt
32 Fuel meter unit bolt
33 Hose protector
34 Clip
35 Air breather clamp
36 Tapping screw
37 Washer
38 Air vent clip
40 Fuel tank CP
41 Filler pipe CP
42 Air vent hose
44 Return hose
45 Hose protector

Downloaded from www.Manualslib.com manuals search engine

4-5. Fuel Tank

1. Removal and Disassembly

1) Disconnect ground cable from battery.
2) Lift up vehicle and detach rear right tire and wheel.
3) Disconnect electric connector for fuel meter unit.
4) Drain gasoline by removing drain bolt. Remove filler cap for quick draining.

NOTE:
Keep open flames away from all working areas. After all gasoline is completely drained, securely tighten drain bolt.

Torque	12 ± 4 N·m (1.2 ± 0.4 kg-m, 8.7 ± 2.9 ft-lb)

5) Detach protector from filler pipe.
6) Disconnect hoses, pipes and tubes as follows.
a. Filler hose from fuel tank.
b. Air-vent hose from air-vent pipe.
c. Air-breather hoses from air-breather pipes.
d. Delivery hose.
e. Return hose.
f. Air-breather hose.
7) Support fuel tank, and remove it while pulling down backward.
8) Detach fuel meter unit and gasket.

NOTE:
Be careful not to damage gasket.

9) Disconnect air-vent hose and air-breather hoses from fuel tank.

2. Inspection

1) Check leakage, rust, crack, or dust adhered. If necessary, clean the inside of fuel tank or replace.
2) When fuel filter is easy to be logged resulting from accumulation dust or foreign matter in fuel tank, ı the inside of fuel tank by gaso- ›r by blowing compressed air.

3. Assembly

1) Assemble fuel meter unit and gasket to fuel tank by nuts.
Tighten nuts diagonally one after the other.

Torque	25 ± 7 N·m (2.5 ± 0.7 kg-m, 18.1 ± 5.1 ft-lb)

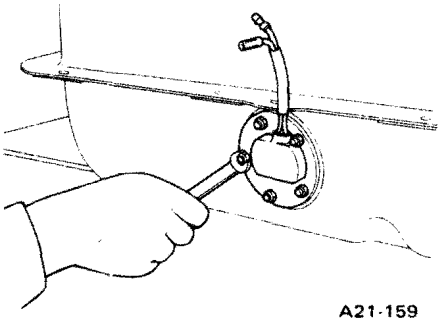

Fig. 4-85

2) Connect air-vent hose and air-breather hoses to fuel tank.

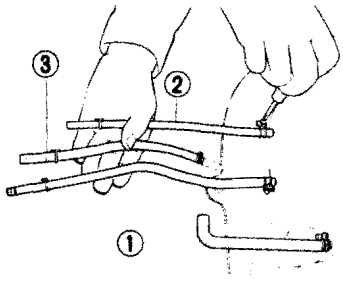

1 Air-breather hose 1
2 Air-breather hose 2
3 Air-breather hose 3
4 Air-vent hose
A21-190

Fig. 4-86 Connecting hose and hoses

4. Installation

1) Insert the front flange of fuel tank into opening between reinforcement and vehicle body.

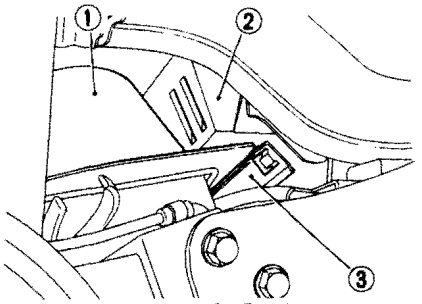

1 Fuel tank
2 Reinforcement
3 Bracket
A21-080

Fig. 4-87 Inserting front flange of fuel tank

2) Slide fuel tank to left or right until mounting holes on its rear are aligned with those on vehicle body. Then install and temporarily tighten the rear of tank with four bolts.
3) Tighten seven bolts installing fuel tank to body.

Torque	14 ± 4 N·m (1.4 ± 0.4 kg-m, 10.1 ± 2.9 ft-lb)

4) Insert fuel filler hose into fuel tank pipe until it stops and then fasten it with clips.
5) Insert air-vent hose by approx. 25 mm (0.98 in) into air-vent pipe, which is attached to fuel filler pipe, and then fasten it with clips.
6) Connect air breather hoses as follows.

For All Models Except Station Wagon

Connect hose 1 to the middle air-breather pipe, hose 2 to the highest pipe and hose 3 to the lowest pipe at wheel apron and tighten them with clips.

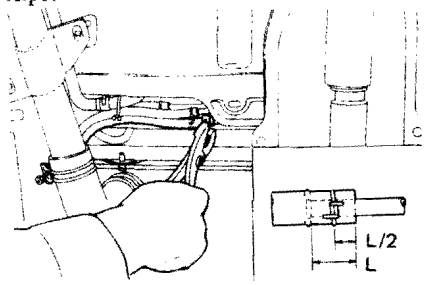

Fig. 4-88 Connecting air-breather hoses

For Station Wagon

Connect hose 1 to the highest air-breather pipe, hose 2 to the lowest pipe and hose 3 to the middle pipe at wheel apron and tighten them with clips.

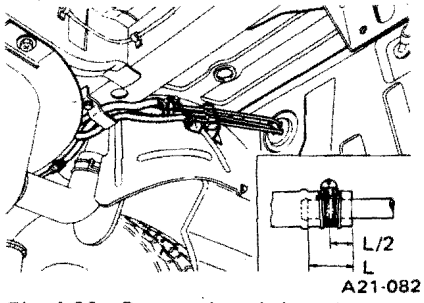

Fig. 4-89 Connecting air-breather hoses

Downloaded from www.Manualslib.com manuals search engine

7) Connect delivery hose, return hose and air-breather hose to fuel tank and tighten them with clips.

NOTE:
Overlap at connection
For delivery hose and return hose; more than 20 mm (0.79 in)
For air-breather hose; more than 15 mm (0.59 in)

8) Align protector with wheel apron at mounting holes, then install protector on filler pipe.

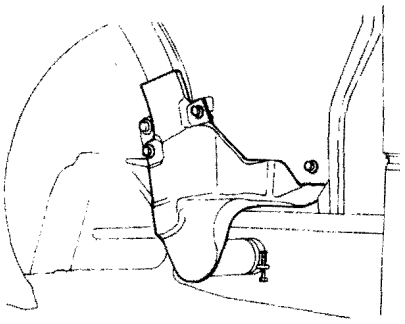

A21-162

Fig. 4-90 Installing protector

9) Install rear right tire and wheel.
10) Connect electric connector for fuel meter unit.
11) Fill fuel tank with gasoline and check for any leakage.
12) Connect ground cable with battery.

4-6. Fuel Filler Pipe

1. Removal

1) Disconnect ground cable from battery.
2) Open filler flap, and detach following parts.
a. Filler cap.
b. Screws installing filler pipe.
c. Filler packing.
3) Lift up vehicle and detach rear right tire and wheel.
4) Drain gasoline by removing drain bolt.
5) Remove protector from filler pipe.
6) Disconnect filler hose and air-vent hose from filler pipe.
7) Remove filler pipe downward.

2. Installation

1) Insert filler pipe to the hole in saucer through the inside of wheel apron and install filler packing to filler pipe by tightening three screws.

NOTE:
When filler packing edge is folded inward, straighten it with a flat-blade screwdriver.

2) Align holes on filler pipe bracket with those on wheel apron bracket, and temporarily tighten it using only the rear upper bolt.

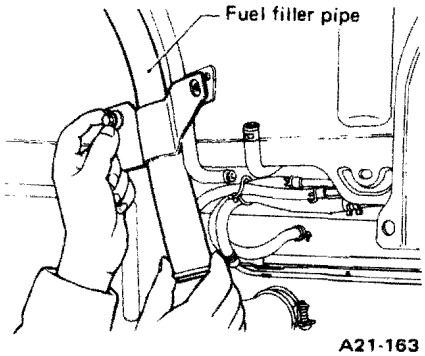

A21-163

Fig. 4-91 Installing filler pipe

3) Insert filler hose into filler pipe by approx. 35 mm (1.38 in) and tighten them with clip.
4) Insert air-vent hose into air-vent pipe by approx. 25 mm (0.98 in) and tighten them with clip.

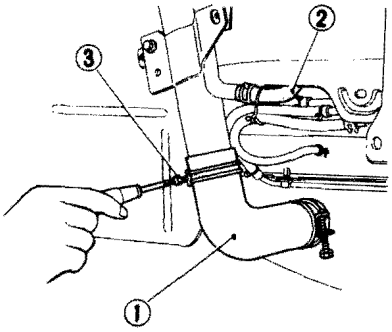

1 Fuel filler hose
2 Air-vent hose
3 Clips

A21-164

Fig. 4-92 Tightening hose clip

NOTE:
Fasten clips, ensuring that they do not interfere with filler pipe protector or wheel apron.

5) Install protector to filler pipe and tighten them with bolts.
6) Install rear right tire and wheel.
7) Fill fuel tank with gasoline and check for any leakage.
8) Connect ground cable with battery.

Downloaded from www.Manualslib.com manuals search engine

4-7. Fuel Separator

1. Sedan and Hardtop

1) Removal

1) Detach back rest of rear seat and rear quarter trim.
2) Remove fuel separator installing screw from rear bulkhead side.
3) Remove screws and nut installing fuel separator in trunk room.
4) Disconnect air-breather hoses under rear floor.
5) Bend the joining portion of cover and protector toward first the center of vehicle and then its rear while removing separator from floor.
6) Remove screw securing band to separator, then disconnect hose between separator and pipe.
7) Take out separator by expanding the band.

NOTE:
Be careful not to damage separator nozzle.

2) Installation

1) Connect hoses between separator and pipe, and fit band to separator.

NOTE:

a. The hoses should be inserted into separator nozzles until they reach the bases of separator nozzles.
The hose small end should be inserted approx. 15 mm (0.59 in) into pipe.
The hose large end should be inserted approx. 25 mm (0.98 in) into pipe.

b. Connect the "L-bend" small hose between separator upper nozzle and the pipe situated in front of large pipe.

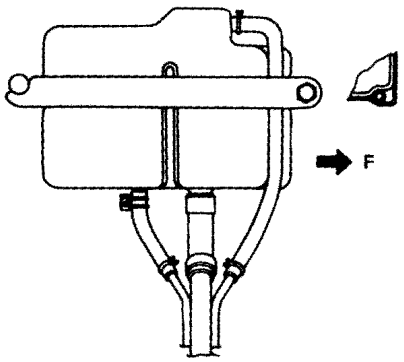

A21-089

Fig. 4-93 Connecting hoses

c. Before installing band on separator, insert "L-bend" small hose projected from separator upper nozzle into concave portion at the corner of separator.

2) Connect air-breather hoses to pipe under rear floor.
3) Install separator onto body with cover and protector.

NOTE:
Ensure to tighten fuel separator installing screw from rear bulk-head side.

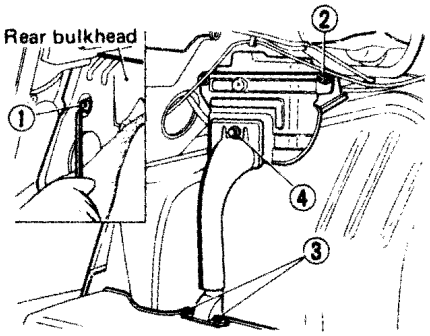

1 Screw A
2 Nut B
3 Screw C
4 Screw D

A21-087

Fig. 4-94

4) Attach rear quarter trim and back rest of rear seat as before.

2. Hatchback

1) Removal

1) Detach rear trim and rear quarter trim.
2) Disconnect hoses from separator.
3) Remove separator from body.
4) Remove screw securing band to separator, and take out separator by expanding the band.

NOTE:
Be careful not to damage separator nozzle.

5) Disconnect air-breather hoses under rear floor.
6) Remove two screws securing pipe assembly to floor, and pull it out while inclining it rearwards.

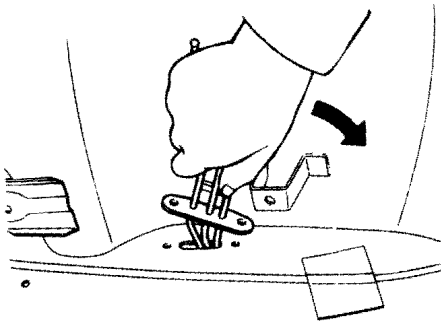

A21-092

Fig. 4-95 Removing pipe compl

NOTE:
Be careful not to damage pipe ends.

2) Installation

1) Attach pipe assembly with 2 screws.
2) Connect air-breather hoses to pipe assembly under rear floor.
3) Fit band onto separator with screw.
4) Install separator in position with 2 screws.

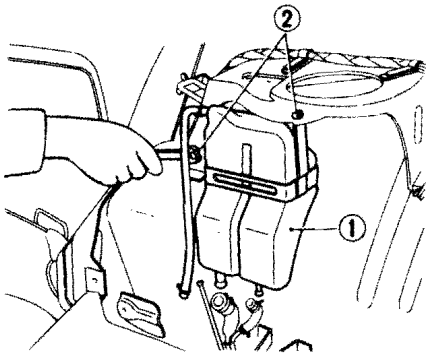

1 Separator
2 Screws

A21-091

Fig. 4-96

5) Connect hoses to separator.

NOTE:

a. Connect hoses to separator and pipes as before .

b. The hoses should be inserted into separator nozzles until they reach the bases of separator nozzles. The hoses should be inserted approx. 15 mm (0.59 in) into pipes.

6) Attach rear trim and rear quarter trim as before.

Downloaded from www.Manualslib.com manuals search engine

3. Station Wagon

1) Removal

1) Detach rear trim and rear quarter trim.
2) Remove separator from rear quarter panel.
3) Disconnect hoses from separator.
4) Remove screw securing band to separator, and take out separator by expanding the band.

2) Installation

1) Fit band to separator with screw.
2) Connect hoses to separator with clips .
3) Install separator onto rear quarter panel with 2 screws.
4) Attach rear trim and rear quarter trim as before.

4. 4WD BRAT

1) Removal

1) Detach rear side panel cover on right side of rear cargo space.
2) Detach separator from back side of rear side panel, and pull it out through side panel hole.

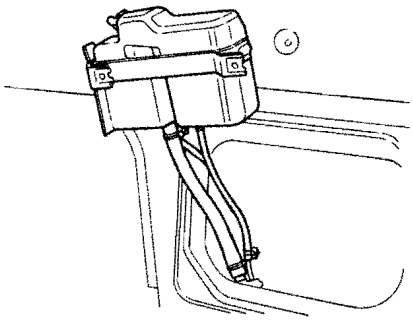

Fig. 4-97 A21-165

3) Disconnect hoses from separator.
4) Remove screw securing band to separator, and take out separator by expanding the band.

2) Installation

1) Fit band to separator with screw.
2) Connect hoses to separator with clips .
3) Install separator onto back side of rear side panel with 2 screws.
4) Attach rear side panel cover as before.

4-8. Fuel Filter

NOTE:
a. Before starting the job, be sure to carry out the following.
1) Place "No fire" signs near the working area.
2) Disconnect ground cable from battery.
b. Be careful not to spill fuel on the floor.

1. Replacement

NOTE:
Before removing the fuel filter, pinch the delivery hose on the fuel tank side (as viewed from the fuel filter) with a pinch cock, etc., to block the discharge of fuel.

1) Unfasten the clip which connects the fuel hose to the fuel filter and disconnect the hose.
2) Remove the fuel filter from the holder.

NOTE:
The fuel filter has a cartridge design.

2. Inspection

NOTE:
The fuel filter has a cartridge design and cannot be disassembled.
a. Check the interior of the fuel filter for any indication of dust or dirt. If dust or dirt is noticed, replace the fuel filter.
b. If water is in the fuel filter, point the fuel outlet down and shake the fuel filter to remove water.

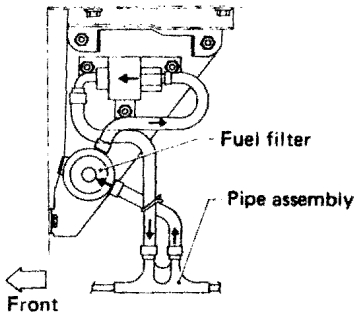

Non-BRAT

A21-184

Fig. 4-98 Non-BRAT

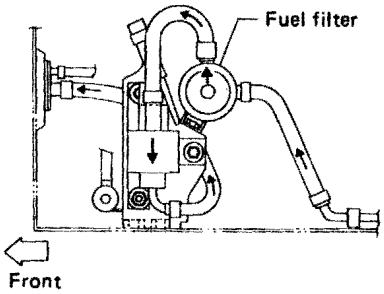

BRAT

A21-185

Fig. 4-99 BRAT

Downloaded from www.Manualslib.com manuals search engine

4-9. Fuel Pump

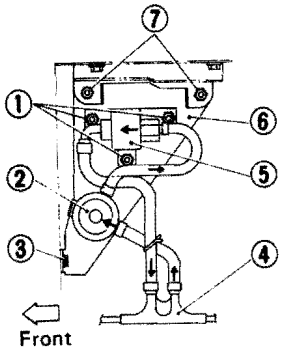

1 Nuts
2 Fuel filter
3 Screw
4 Pipe assembly
5 Fuel pump
6 Fuel pump bracket
7 Screws

A21-186

Fig. 4-100 Non-BRAT

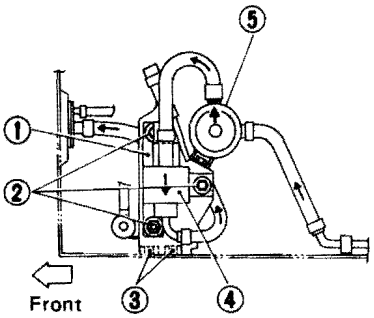

1 Fuel pump bracket
2 Nuts
3 Screws
4 Fuel pump
5 Fuel filter

A21-187

Fig. 4-101 BRAT

1. Removal

1) Pinch the inlet side hose of fuel pump with a pincher to stop gasoline leakage in hose disconnection.
2) Disconnect clip (except BRAT) and connector of electric wiring for fuel pump.
3) Release clips, and disconnect delivery hoses from pipe ASSY (or pipes).
4) Remove three (3) screws, and take out fuel pump bracket along with fuel pump.
5) Remove three (3) nuts, and detach fuel pump from fuel pump bracket.
6) Disconnect delivery hoses from fuel pump.

2. Inspection

In principle, fuel pump should not be disassembled.
1) Check the hose connections for leakage by operating fuel pump.
2) Check connections of fuel pump wiring for looseness.
3) Check performance of fuel pump as follows.

a. Operating sound
Confirm that the operating sound of fuel pump is generated while engine is running.

b. Discharge pressure
Disconnect fuel hose from carburetor and connect it to pressure gauge or manometer. Measure discharge pressure while operating fuel pump.

Discharge pressure:	8.8 – 13.7 kPa (0.09 – 0.14 kg/cm², 1.3 – 2.0 psi) or 9.3 – 14.7 kPa (70 – 110 mmHg, 2.76 – 4.33 inHg)

c. Suction pressure
Disconnect fuel hose (filter to pump) from filter and also put a finger on the hose end and check if the finger is sucked.
Replace fuel pump ASSY if abnormal when checking pump.

NOTE:
If pump is operated without fuel, endurance of the pump will be shortened. So, don't operate pump without fuel.

3. Installation

1) Attach cushions to fuel pump as follows.

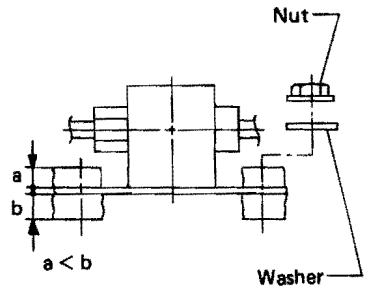

A21-188

Fig. 4-102

2) Fit fuel pump to fuel pump bracket in position, and tighten three (3) nuts with washers.
3) Connect delivery hoses to fuel pump.
4) Install fuel pump bracket along with fuel pump to vehicle body with three (3) screws.
5) Connect delivery hoses to pipe ASSY (or pipes) with clips.
6) Connect electric connector and clip (except BRAT) for fuel pump.

Downloaded from www.Manualslib.com manuals search engine

4-10. Vapor Separator

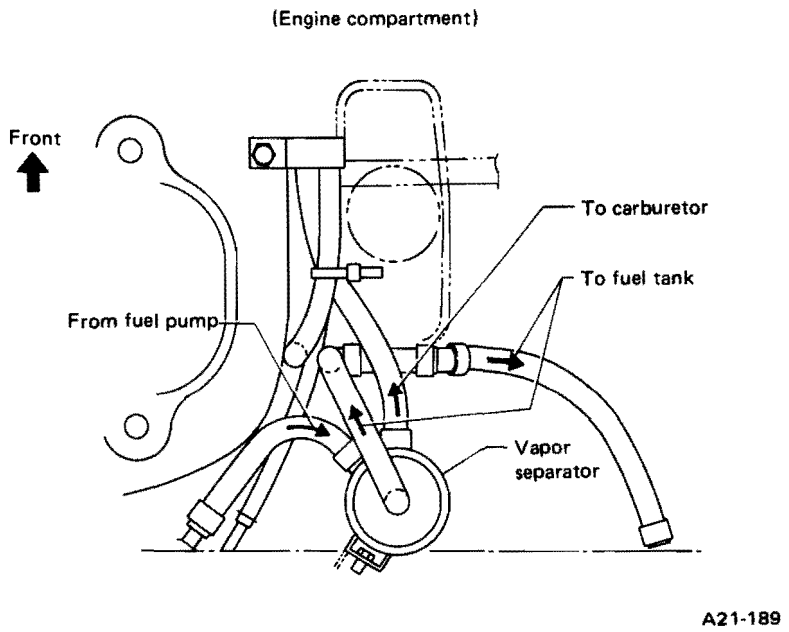

Fig. 4-103

1. Removal and Installation

1) Release clips, and disconnect hoses from vapor separator.
2) Pull out vapor separator from holder.
3) Installation can be carried out in the reverse order of removal.

2. Inspection

1) Inspect vapor separator if the foreign matter exists in it. Replace it if it will interfere with running.
2) If water is found in it, shake it with its outlet downward, and water will be removed.

NOTE:
The vapor separator is a cartridge type, so it should not be disassembled.

Downloaded from www.Manualslib.com manuals search engine

4-11. Fuel Delivery and Fuel Return Line

1. Removal

1) Under body floor, detach fuel delivery and return line as follows.
a. Delivery hose (between fuel tank and pipe).
b. Return hose (between fuel tank and pipe).
c. Delivery hoses (between fuel filter and pipes).
d. Return hose (between pipe and pipe).
2) In engine compartment, detach fuel delivery and return line as follows.
a. Delivery hose (between fuel pump and pipe).
b. Clamp from suspension bracket reinforcement.
c. Clamp from fuel hose stay.
d. Air cleaner.
e. Delivery hose (between fuel pump and carburetor).
f. Return hose (between carburetor and pipe).

2. Installation

NOTE:
a. Connect delivery hose to delivery pipe with overlap 25 to 30 mm (0.98 to 1.18 in).
b. Connect delivery hoses and fuel return hose to fuel tank, fuel pump, and fuel filter until they reach the bases of each pipe. Clips should be positioned with their center 12 mm (0.47 in) from hose ends.

1) Connect fuel delivery hose and fuel return hose to carburetor.
2) Install their hoses along with purge hose onto stay with clamp.

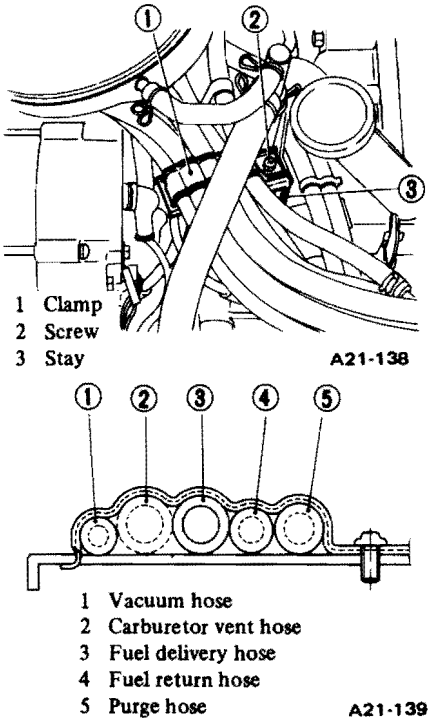

Fig. 4-104

3) Attach their hoses with clamp at suspension bracket reinforcement.
4) Connect fuel delivery hose to fuel pump, and return hose to pipe.
5) Attach fuel delivery hose between fuel pump and pipe.
6) Install air cleaner in position.
7) Under body floor, attach fuel return hose with clip between pipes.
8) Attach fuel delivery hoses with clips between fuel filter and pipes.
9) Attach fuel delivery hose and fuel return hose between fuel tank and pipes.

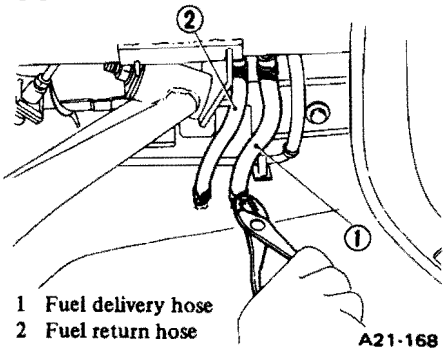

Fig. 4-105

NOTE:
Ensure to inspect hoses and their connections for no leakage of fuel.

Downloaded from www.Manualslib.com manuals search engine

4-12. Evaporation Line and Canister

1. Removal

1) Under body floor, detach evaporation line as follows.

a. Air-breather tubes (between fuel tank and air-breather pipe).
b. Air-breather tubes (between 2-way valve and air-breather pipes).
c. 2-way valve.

2) In engine compartment, detach hoses and tube as follows.

a. Evaporation tube (between pipe at bulkhead and pipe complete).
b. Purge hose, vacuum hose etc. (from rear end of pipe complete).
c. Hoses (between front end of pipe complete and canister).

3) Remove pipe complete, canister and canister bracket from wheel apron.

2. Installation

NOTE:
Insert air-breather tube into air-breather pipe by approx. 15 mm (0.59 in) and position a clip with approx. 8 mm (0.31 in) from hose end.

1) Install bracket with four screws, and set canister by operating clip of bracket.

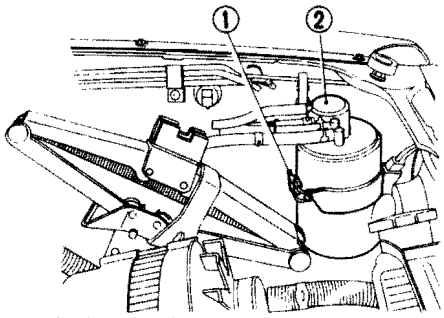

1 Canister bracket
2 Canister

A21-169

Fig. 4-106

2) Install pipe complete in position with two screws.

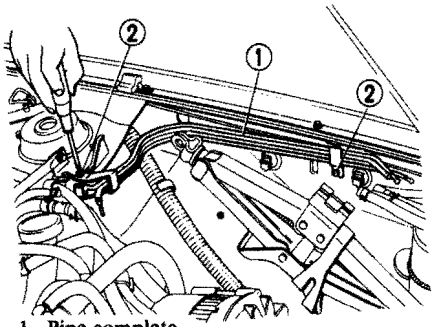

1 Pipe complete
2 Screws

A21-170

Fig. 4-107

3) Attach hoses with clips between canister and front end of pipe complete, and connect purge hose, vacuum hose etc. with clips to rear end of pipe complete.

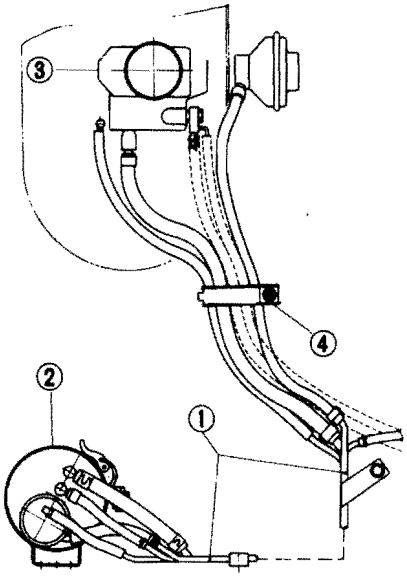

1 Pipe complete
2 Canister
3 Carburetor
4 Hose clamp

A3-258

Fig. 4-108

4) Attach evaporation tube between pipe at bulkhead and rear end of pipe complete.

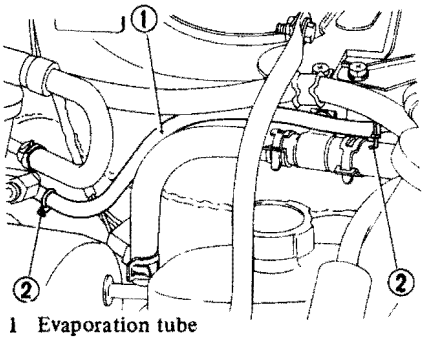

1 Evaporation tube
2 Clips

A21-171

Fig. 4-109

5) Install 2-way valve with screw, and attach air-breather tubes with clips between 2-way valve and air-breather pipes.

NOTE:
Install 2-way valve with its "TO ENGINE" mark facing downward.

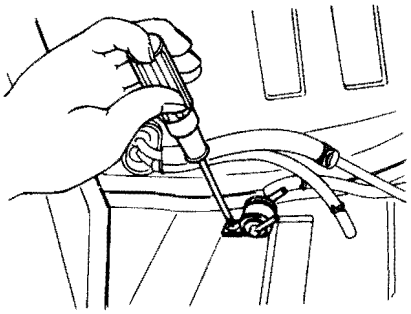

A21-119

Fig. 4-110

6) Attach air-breather tubes with clips between fuel tank and air-breather pipe.

Downloaded from www.Manualslib.com manuals search engine

4-13. Troubleshooting

1. Hitachi Carburetor

Before troubleshooting, make certain that the ignition system and fuel line function correctly.

Trouble and possible cause	Corrective action
1. Overflow	
1) Poor contact between needle valve and valve seat, or damaged contact surfaces.	Clean or lap contact surfaces, or replace.
2) Improper float level adjustment.	Readjust float level.
3) Worn float seat or float stopper.	Replace float.
4) Worn float shaft.	Replace.
5) Damaged float chamber gasket or loose screw.	Replace gasket or retighten screw.
6) High fuel pump discharge pressure.	Inspect and repair or replace fuel pump.
2. Excessive fuel consumption.	
1) Overflow.	See items for "1. Overflow."
2) Improper number of main jet or slow jet.	Replace.
3) Clogged air bleed.	Clean or replace.
4) Defective power valve or vacuum leaking from power valve system.	Inspect and repair or replace.
5) Defective accelerating pump injector weight seat.	Inspect and repair or replace.
6) Loose plugs or jets, or damaged gaskets.	Retighten or replace.
7) Improper opening of choke valve.	Inspect and repair linkage.
8) Improper opening of secondary throttle valve.	Inspect and repair linkage.
3. Rough idle	
1) Improper idle adjustment.	Adjust.
2) Damaged idle mixture adjusting screw.	Replace.
3) Clogged idle hole, by-pass hole, or slow system passage.	Clean.
4) Clogged slow jet.	Clean.
5) Worn throttle valve shaft.	Replace.
6) Damaged or improperly tightened gasket under carburetor.	Replace or retighten.
7) Leaking vacuum hoses.	Inspect and replace.
8) Overflow.	See items for "1. Overflow".
4. Low output	
1) Clogged main jet.	Clean.
2) Improper throttle valve opening.	Inspect and adjust.
3) Improper choke valve opening.	Inspect and adjust.

Downloaded from www.Manualslib.com manuals search engine

Trouble and possible cause	Corrective action
5. Hesitation	
1) Clogged slow jet, main jet, or emulsion tube.	Clean.
2) Clogged by-pass hole or slow system passage.	Clean.
3) Improper idle adjustment.	Inspect and adjust.
4) Malfunction of secondary throttle valve.	Adjust.
6. Poor acceleration	
1) Defective accelerating pump piston or piston return spring.	Replace.
2) Malfunction of accelerating pump inlet valve or outlet valve.	Replace.
3) Clogged pump nozzle.	Clean.
4) Malfunction of accelerating pump linkage.	Repair.
5) Defective power valve.	Replace.
6) Malfunction of power valve piston.	Inspect and replace.
7) Improper float level.	Adjust float level.
8) Malfunction of throttle valve.	Adjust.
7. Poor high-speed performance	
1) Clogged main jet.	Clean.
2) Improper throttle valve opening.	Adjust.
3) Worn throttle valve shaft.	Replace.
4) Improper float level.	Adjust float level.
5) Damaged gaskets.	Replace.
8. Difficulty in starting at low temperatures	
1) Malfunction of choke valve.	Adjust.
2) Malfunction of choke linkage.	Adjust.
3) Improper fast idle opening.	Adjust.
4) Improper adjustments of automatic choke.	Adjust.

Downloaded from www.Manualslib.com manuals search engine

2. Carter-Weber Carburetor

Trouble	Possible cause	Corrective action
1. Flooding	a. Poor contact between needle valve and seat, or damaged surface.	Clean or replace needle valve and seat assembly.
	b. Improper float level adjustment.	Readjust float level.
	c. Worn float hinge or damaged float.	Replace float.
	d. Worn float hinge pin.	Replace hinge pin.
	e. High fuel pressure.	Make sure fuel return line is open and that restriction is not clogged, inspect and repair or replace fuel pump.
2. Excessive fuel consumption	a. Flooding.	See section "1 Flooding".
	b. Dirty air bleeds.	Clean.
	c. Connecting rod not installed properly.	Make sure connecting rod is attached at both ends and that bushings are in good shape.
	d. Accelerating pump nozzle feeding.	Check discharge ball and weight. Make sure anti-siphon passage in body and air horn are open.
	e. Choke valve not opening fully.	Check to make sure choke valve does not bind. Check to make sure choke coil assembly has electric supplied. Check to make sure choke coil assembly does not have an open circuit – if so replace.
	f. Feedback pulse solenoid not functioning.	Make sure wire connections are clean and tight. Make sure electronic control module is operating correctly, check feedback pulse solenoid for continuity and for shorts or grounded wires – replace if damaged.
	g. Bowl vent solenoid not functioning.	Check solenoid for continuity and for shorts or grounds. Check to make sure that power supply to bowl vent solenoid is good.
3. Rough idle	a. Improper idle adjustment.	Adjust idle.
	b. Dirt in low speed jet or in bleeds or passages.	Clean carburetor.
	c. Flange to body gasket defective.	Re-tighten screws or replace gasket.
	d. Flange to manifold bolts loose or damaged O-ring.	Re-tighten bolts or replace gasket.
	e. Leaking vacuum hoses.	Inspect and replace.
	f. Intake manifold to head bolts.	Re-tighten bolts or replace gasket.
	g. Damaged E.G.R. valve.	Make sure E.G.R. valve closes fully with no vacuum applied.

Downloaded from www.Manualslib.com manuals search engine

Trouble	Possible cause	Corrective action
3. Rough idle	h. Flooding.	See section "1 Flooding".
	i. Feedback pulse solenoid not functioning.	See section "2 f".
	j. Damaged choke break diaphragm.	Inspect and replace.
4. Low power output	a. Dirty or clogged main system.	Clean.
	b. Improper throttle valve opening.	Inspect and adjust throttle cable.
	c. Choke valve not opening fully.	Check to make sure choke valve does not bind. Check to make sure choke coil assembly has electric supplied. Check to make sure choke coil assembly does not have an open circuit – if so replace.
	d. Feedback pulse solenoid not functioning.	Make sure wire connections are clean and tight. Make sure electronic control module is operating correctly, check feedback pulse solenoid for continuity and for shorts or grounded wires – replace if damaged.
	e. Dirty fuel filter.	Replace fuel filter.
	f. Low fuel pressure.	Repair or replace fuel pump.
	g. Restriction in exhaust system.	Inspect exhaust system carefully and replace any faulty parts.
	h. Bowl vent solenoid not functioning.	Check solenoid for continuity and for shorts or grounds. Check to make sure that power supply to bowl vent solenoid is good.
5. Hesitation and/or poor acceleration	a. Dirty or clogged main jet or main system.	Clean.
	b. Improper float level.	Inspect and re-adjust float level.
	c. Improper idle adjustment.	Re-adjust idle settings.
	d. Connecting rod not installed properly.	Make sure connecting rod is attached at both ends and that bushings are in good shape.
	e. Clogged accelerating pump nozzle.	Clean.
	f. Dirty or damaged intake or discharge check balls for accelerating pump.	Clean or replace.
	g. Damaged or disconnected accelerating pump fuel delivery tube.	Re-connect or replace delivery tube.
	h. Damaged accelerating pump diaphragm.	Inspect and replace.
	i. Feedback pulse solenoid not functioning.	Make sure wire connections are clean and tight. Make sure electronic control module is operating correctly. Check feedback pulse solenoid for continuity and for shorts or grounded wires – replace if damaged.
	j. Fuel filter dirty.	Replace.

Downloaded from www.Manualslib.com manuals search engine

Trouble	Possible cause	Corrective action
5. Hesitation and/or poor acceleration	k. Fuel pump pressure low.	Repair or replace.
	l. Bowl vent solenoid not functioning.	Check solenoid for continuity and for shorts or grounds. Check to make sure that power supply to bowl vent solenoid is good.
6. Poor high-speed performance	a. Dirty or clogged main jet or main system.	Clean.
	b. Improper throttle valve opening.	Inspect and adjust throttle cable.
	c. Improper float level.	Adjust float level.
	d. Feedback pulse solenoid not functioning.	Make sure wire connections are clean and tight. Make sure electronic control module is operating correctly. Check feedback pulse solenoid for continuity and for shorts or grounded wires – replace if damaged.
	e. Bowl vent solenoid not functioning.	Check solenoid for continuity and for shorts or grounds. Check to make sure that power supply to bowl vent solenoid is good.
	f. Dirty fuel filter.	Replace.
	g. Fuel pump pressure low.	Repair or replace.
	h. Restriction in exhaust system.	Inspect exhaust system carefully and replace any faulty parts.
7. Difficult starting at low temperatures	a. Malfunction of choke valve and linkage.	Make sure valve does not stick and that valve closes fully.
	b. Improper adjustment of choke system.	Make sure all adjustments are correct.
	c. Improper fast idle speed.	Adjust fast idle.
	d. Vacuum supply hose to choke break diaphragm clogged or cracked.	Inspect and replace.
	e. Damaged choke break diaphragm.	Inspect and replace.
	f. Feedback pulse solenoid not functioning.	Make sure wire connections are clean and tight. Make sure electronic control module is operating correctly. Check feedback pulse solenoid for continuity and for shorts or grounded wires – replace if damaged.

Downloaded from www.Manualslib.com manuals search engine

3. Other Components

	Trouble and possible cause	Corrective action
1. Insufficient fuel supply to the carburetor		
1)	Fuel pump will not operate	
	○ Defective terminal contact.	Inspect connections, especially ground, and tighten securely.
	○ Trouble in electromagnetic or electronic circuit parts.	Replace fuel pump.
2)	Lowering of fuel pump function.	Replace fuel pump.
3)	Clogged dust or water in the fuel filter.	Replace fuel filter, clean or replace fuel tank.
4)	Clogged or bent fuel pipe or hose.	Clean, correct or replace fuel pipe or hose.
5)	Air is mixed in the fuel system.	Inspect or retighten each connection part.
6)	Clogged or bent air breather tube or pipe	Clean, correct or replace air breather tube or pipe
2. Leakage or blow out fuel		
1)	Loosened joints of the fuel pipe.	Retightening
2)	Cracked fuel pipe, hose and fuel tank.	Replace
3)	Defective welding part on the fuel tank.	Replace
4)	Defective drain packing of the fuel tank.	Replace
5)	Clogged or bent air breather tube or air vent tube.	Clean, correct or replace air breather tube or air vent tube.
3. Gasoline is smelling inside of compartment		
1)	Loosened joints at air breather tube, air bent tube and fuel filler pipe.	Retightening
2)	Defective packing air tighteness on the fuel saucer.	Correct or replace packing.
3)	Cracked fuel separator	Replace separator.
4. Defective fuel meter indicator		
1)	Defective operation of fuel meter unit	Replace
2)	Defective operation of fuel meter	Replace
5. Noise		
1)	Large operation noise or vibration of fuel pump	Replace

NOTE:

a. When the vehicle is left unattended for an extended period of time.

(i) Water may accumulate in the fuel tank. To prevent water condensation, top off the fuel tank or drain the fuel completely.

(ii) Also drain water condensation from the fuel filter.

b. Refilling the fuel tank.

(i) Refill the fuel tank while there is still some fuel left in the tank.

c. Protecting the fuel system against freezing and water condensation.

(i) Cold areas

In snow-covered areas, mountainous areas, skiing areas, etc. where ambient temperatures drop below 0°C (32°F),

Downloaded from www.Manualslib.com manuals search engine

throughout the winter season, use an anti-freeze solution in the cooling system.
Refueling will also complement the effect of anti-freeze solution each time the fuel level drops to about one-half.
After the winter season, drain water which may have accumulated in the fuel filter and fuel tank in the manner same as that described under the Moderate Areas.

(ii) Moderate areas
When water condensation is noticed in the fuel filter, drain water from both the fuel filter and fuel tank or use a water removing agent (or anti-freeze solution) in the fuel tank.

- Observe the instructions, notes, etc., indicated on the label affixed to the anti-freeze solution (water removing agent) container before use.

4-14. Special Tools

498167100			
Main Jet Driver			
Main jet (C-W)			
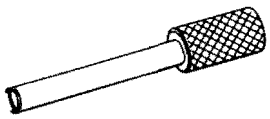 *Fig. 4-111* A8-426			

Downloaded from www.Manualslib.com manuals search engine

CHAPTER 5

EMISSION CONTROL SYSTEM

		Page
5–1.	GENERAL DESCRIPTION	5– 2
	1. System Application	5– 2
	2. General Precautions	5– 2
5–2.	CRANKCASE EMISSION CONTROL SYSTEM	5– 3
	1. Description	5– 3
	2. Inspection	5– 3
5–3.	EXHAUST EMISSION CONTROL SYSTEM	5– 4
	1. Schematic Drawing	5– 4
	2. Wiring Diagram	5– 8
	3. Description	5–10
	4. Inspection	5–18
	5. Troubleshooting for ECC System	5–22
5–4.	EVAPORATIVE EMISSION CONTROL SYSTEM	5–48
	1. Schematic Drawing	5–48
	2. Description	5–48
	3. Inspection	5–49
5–5.	SPECIAL TOOL	5–49

SUBARU

Downloaded from www.Manualslib.com manuals search engine

5-1. General Description

1. System Application

There are three emission control systems which are as follows:
1) Crankcase emission control system
2) Exhaust emission control system
3) Evaporative emission control system

Item \ Destination		U.S.A.			Canada
		California	Non-California		
			4WD	Non-4WD	
Crankcase emission control system		●	●	●	●
Exhaust emission control system	Three-way catalyst attended with ECC system	●	–	●	–
	Oxidation catalyst	–	●	●	●
	EGR system	●	●	●	●
	AI system	●	●	●	●
	Ignition control system	●	●	●	●
	Anti-afterburning system	–	●	–	●
	Shift-up control system	●	–	●	–
	High-altitude kit	–	●	●	–
Evaporative emission control system		●	●	●	●

NOTE:
a. Specifications for each system may differ depending on the destination area.
b. Abbreviations used ECC : Electronically Controlled Carburetor
EGR : Exhaust Gas Recirculation
AI : Air Injection

2. General Precautions

1) Know the importance of periodic maintenance services.
a. Every service item in the periodic maintenance schedule must be performed.
b. Failing to do even one item can cause the engine to run poorly and increase exhaust emissions.
2) Determine if you have an engine or emission system problem.
a. Engine problems are usually not caused by the emission control systems.
b. When troubleshooting, always check the engine and the ignition system first.
3) Check hose and wiring connections first.
The most frequent cause of problems is simply a bad connection in the wiring or vacuum hoses. Always make sure that connections are secure and correct.
4) Avoid coasting with the ignition turned off and prolonged engine braking.
5) Do not damage parts.
a. To disconnect vacuum hoses, pull on the end, not the middle of the hose.

Downloaded from www.Manualslib.com manuals search engine

b. To pull apart electrical connectors, pull on the connector itself, not the wire.
c. Be careful not to drop electrical parts, such as sensors, or relays.
If they are dropped on a hard floor, they should be replaced and not reused.
d. When steam cleaning an engine, protect the distributor, coil, air cleaner, carburetor from water.
e. When checking continuity at the wire connector, the test bar should be inserted carefully to prevent terminals from bending.
6) Use SUBARU genuine parts.
7) Record how hoses are connected before disconnecting.
a. When disconnecting vacuum hoses, use tags to identify how they should be reconnected.
b. After completing a job, double check to see that the vacuum hoses are properly connected. See the "Vacuum connections label" under the hood.

5-2. Crankcase Emission Control System

1. Description

The positive crankcase ventilation (PCV) system is employed to prevent air pollution which will be caused by blow-by gas being emitted from the crankcase.
The system consists of a sealed oil filler cap, rocker covers with an emission outlet and fresh air inlet, connecting hoses, PCV valve and an air cleaner.
At the part throttle, the blow-by gas in the crankcase flows into the intake manifold through the connecting hose of rocker cover on #2–#4 side and PCV valve by the strong vacuum of the intake manifold. Under this condition, the fresh air is introduced into the crankcase through connecting hose of rocker cover on #1–#3 side, and drawn to the intake manifold through PCV valve together with the blow-by gas.
At the wide open throttle, a part of blow-by gas flows into the air cleaner through the connecting hose of rocker cover on #1–#3 side and is drawn to the carburetor, because under this condition, the intake manifold vacuum is not so strong as to introduce all blow-by gases increasing with engine speed directly through the PCV valve.
Under the special operating condition, such as steep right turn driving, engine oil sometimes blows up into connecting hose of rocker cover on #2–#4 side and flows into the intake manifold by the force of the vacuum.
However, in this case, the connecting hose between air cleaner case and connecting hose of rocker cover on #2–#4 side reduces the vacuum to prevent this.

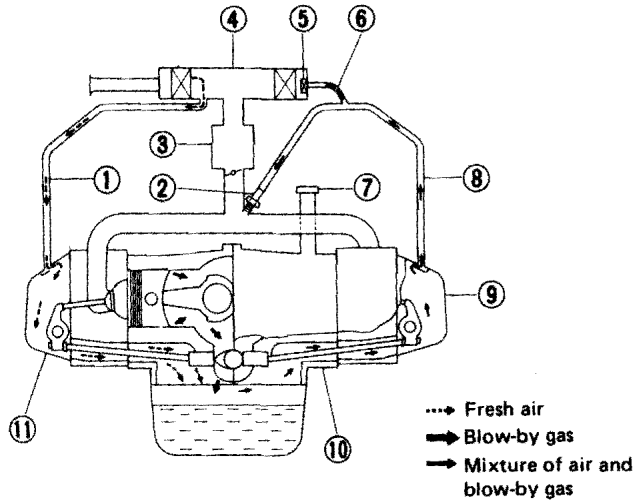

1 Connecting hose
2 P.C.V. valve
3 Carburetor
4 Air cleaner
5 Air filter
6 Connecting hose
7 Oil filler cap (Sealed)
8 Connecting hose
9 Rocker cover on #2 – #4 side
10 Crankcase
11 Rocker cover on #1 – #3 side

Fig. 5-1 A10-060

2. Inspection

1) Check the positive crankcase ventilation hoses and connections for leaks and clogging. The hoses may be cleared with compressed air.
2) Check the oil filler cap to insure that the gasket is not damaged and the cap fits firmly on the filler cap end.
3) Check the PCV valve as the following procedure.
a. Disconnect the hose from the PCV valve.
b. With a finger attaching top of the valve, then lightly open and close the throttle valve (increase and decrease the engine speed a little).
c. The valve is in good condition if a vacuum is felt by the finger. If not, replace the valve.
d. The valve alone may be checked by shaking it. It is normal when you hear it move. Replace it if it fails to move.

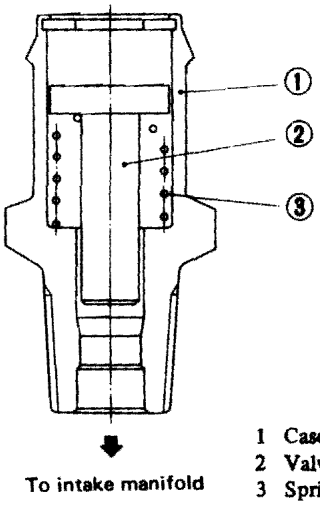

1 Case
2 Valve
3 Spring

Fig. 5-2 A10-086

Downloaded from www.Manualslib.com manuals search engine

5-3. Exhaust Emission Control System

1. Schematic Drawing

1) California Models (Hitachi Carburetor)

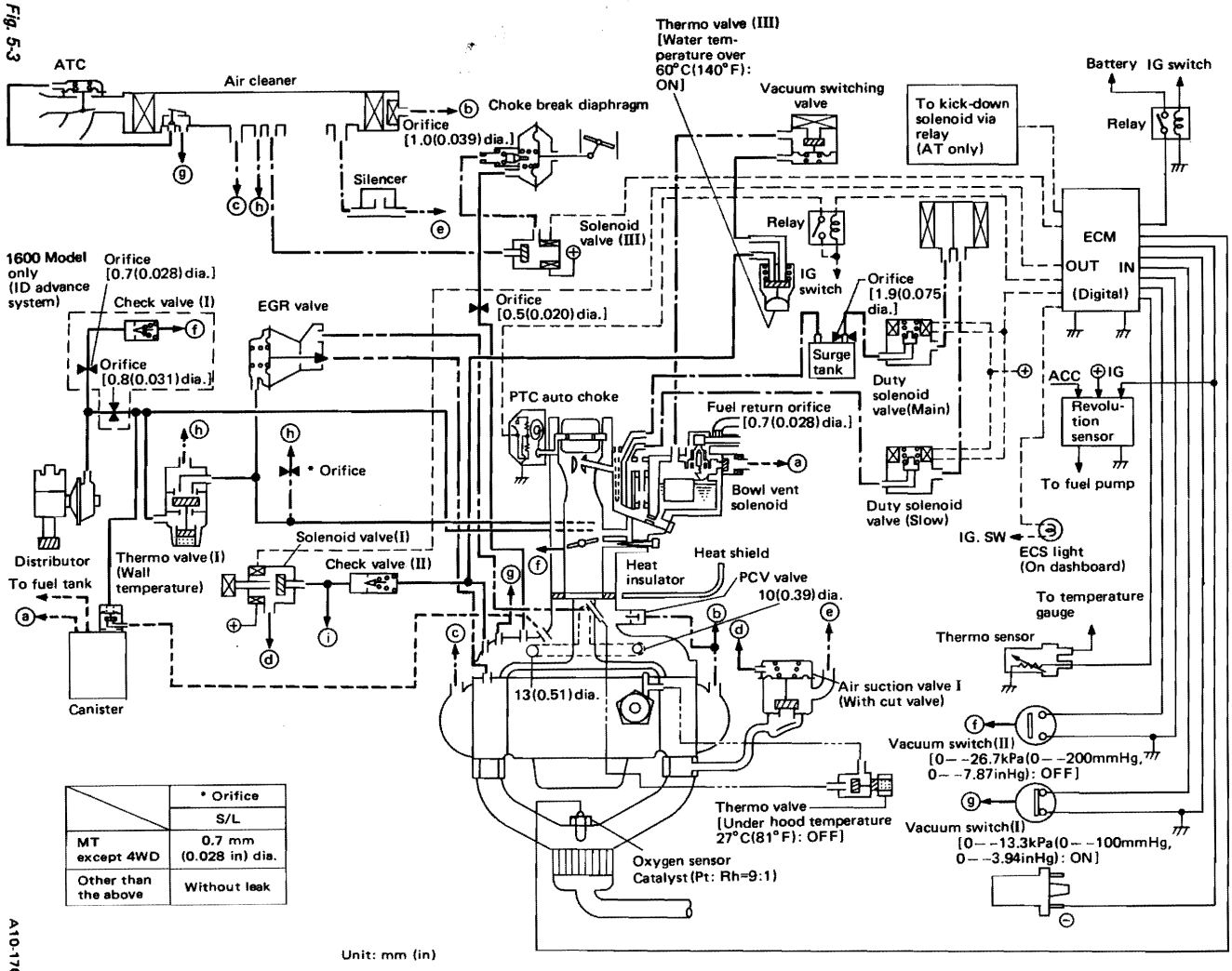

	* Orifice
	S/L
MT except 4WD	0.7 mm (0.028 in) dia.
Other than the above	Without leak

Fig. 5-3

Downloaded from www.Manualslib.com manuals search engine

2) Canada Models and 4WD of Non-California Models (Hitachi Carburetor)

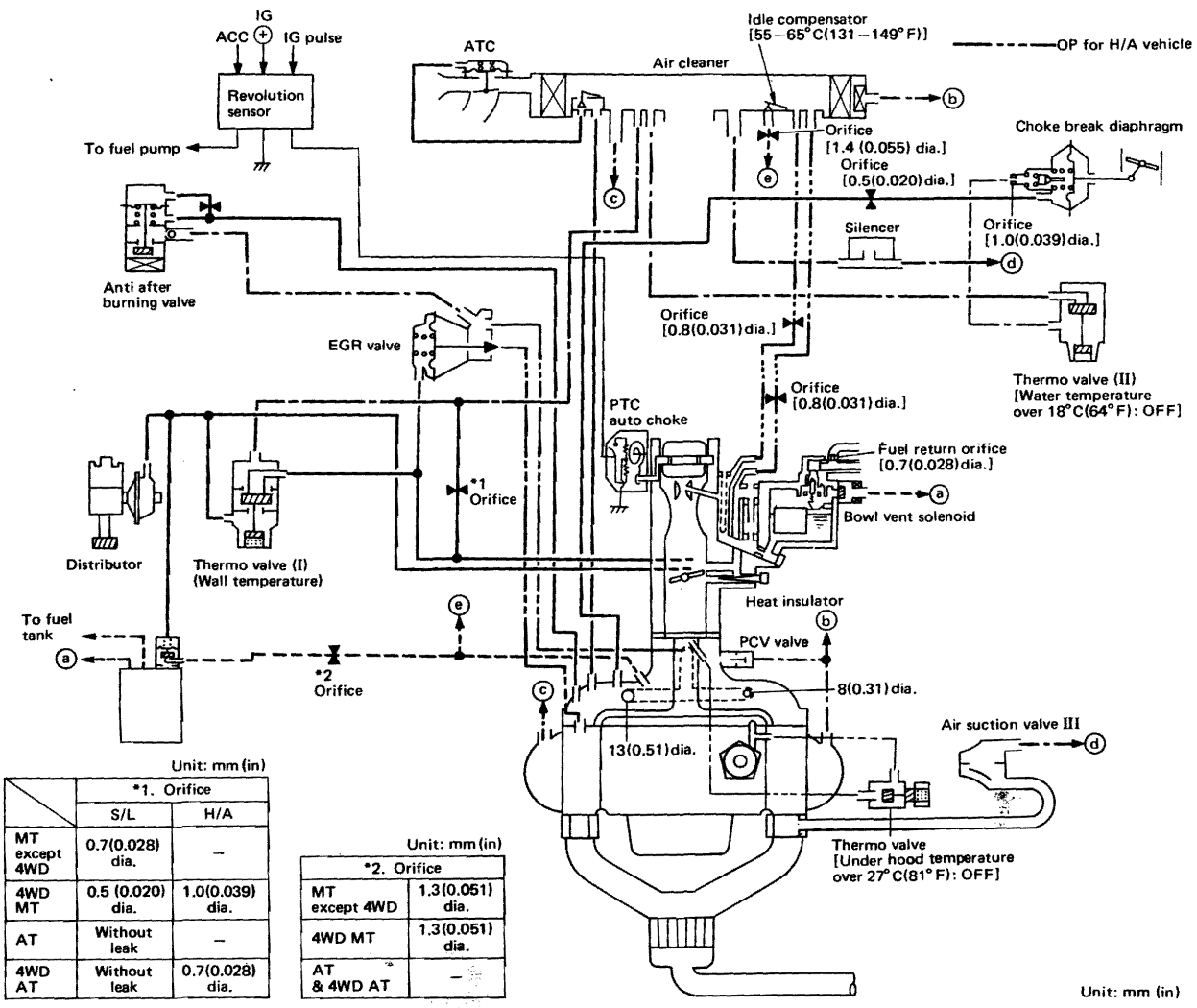

Unit: mm (in)

	*1. Orifice	
	S/L	H/A
MT except 4WD	0.7(0.028) dia.	–
4WD MT	0.5 (0.020) dia.	1.0(0.039) dia.
AT	Without leak	–
4WD AT	Without leak	0.7(0.028) dia.

Unit: mm (in)

*2. Orifice	
MT except 4WD	1.3(0.051) dia.
4WD MT	1.3(0.051) dia.
AT & 4WD AT	–

Fig. 5-4

Downloaded from www.Manualslib.com manuals search engine

3) Non-4WD of Non-California Models (Hitachi Carburetor)

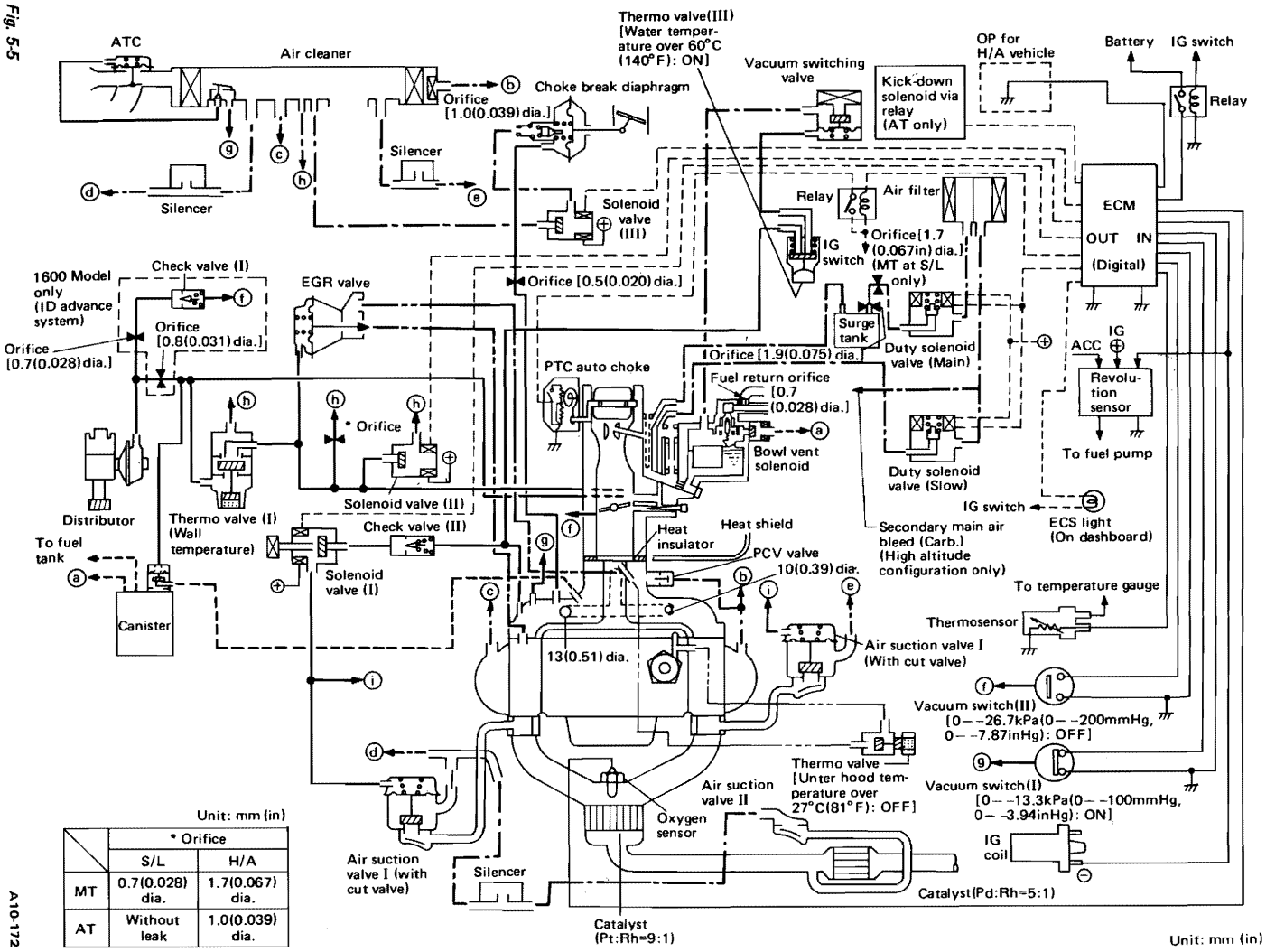

Unit: mm (in)

	* Orifice	
	S/L	H/A
MT	0.7(0.028) dia.	1.7(0.067) dia.
AT	Without leak	1.0(0.039) dia.

Fig. 5-5

Downloaded from www.Manualslib.com manuals search engine

4) Non-4WD of Non-California Models (Carter-Weber (C-W) Carburetor)

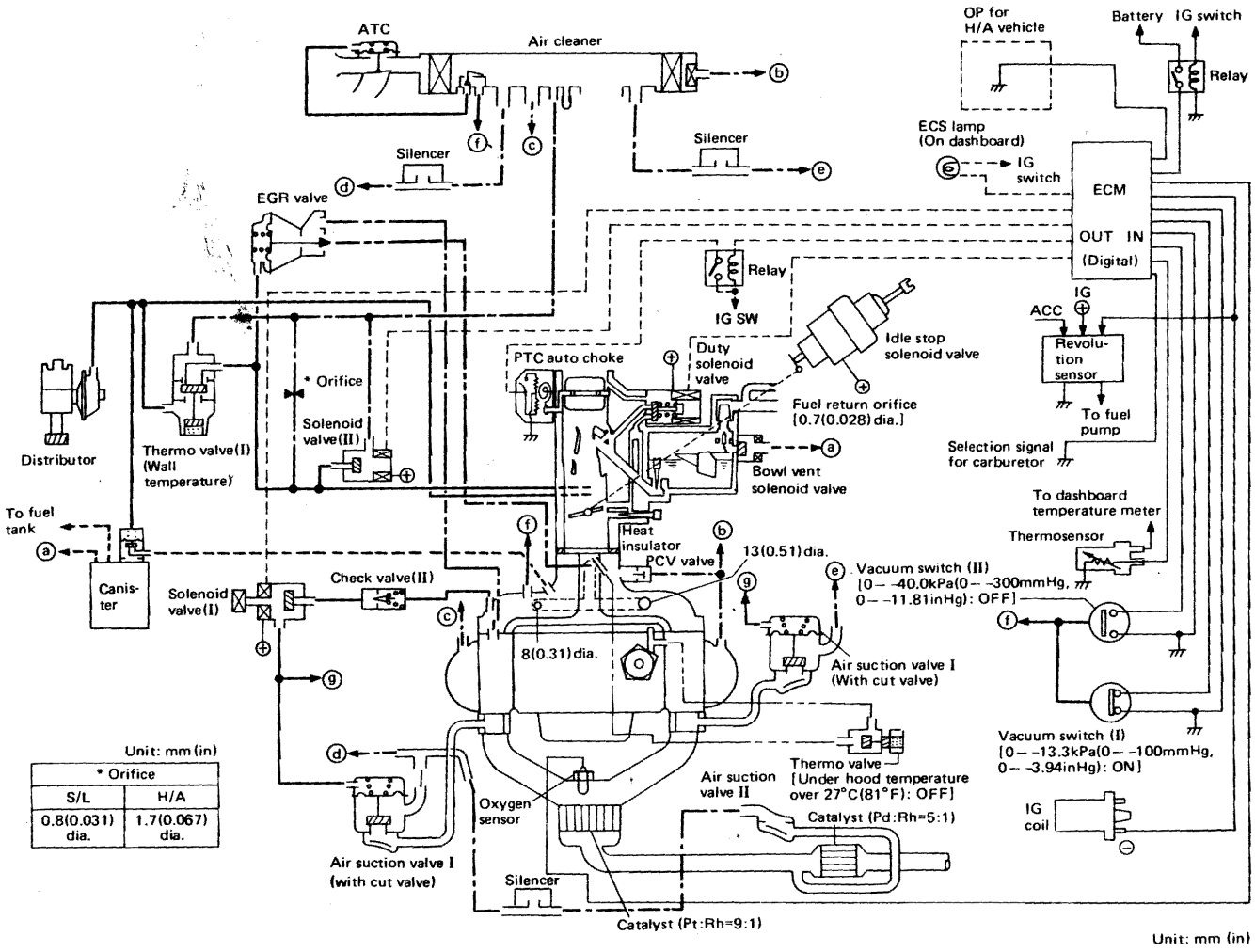

Unit: mm (in)

* Orifice	
S/L	H/A
0.8(0.031) dia.	1.7(0.067) dia.

Fig. 5-6

Downloaded from www.Manualslib.com manuals search engine

2. Wiring Diagram

1) Models Equipped with ECC System

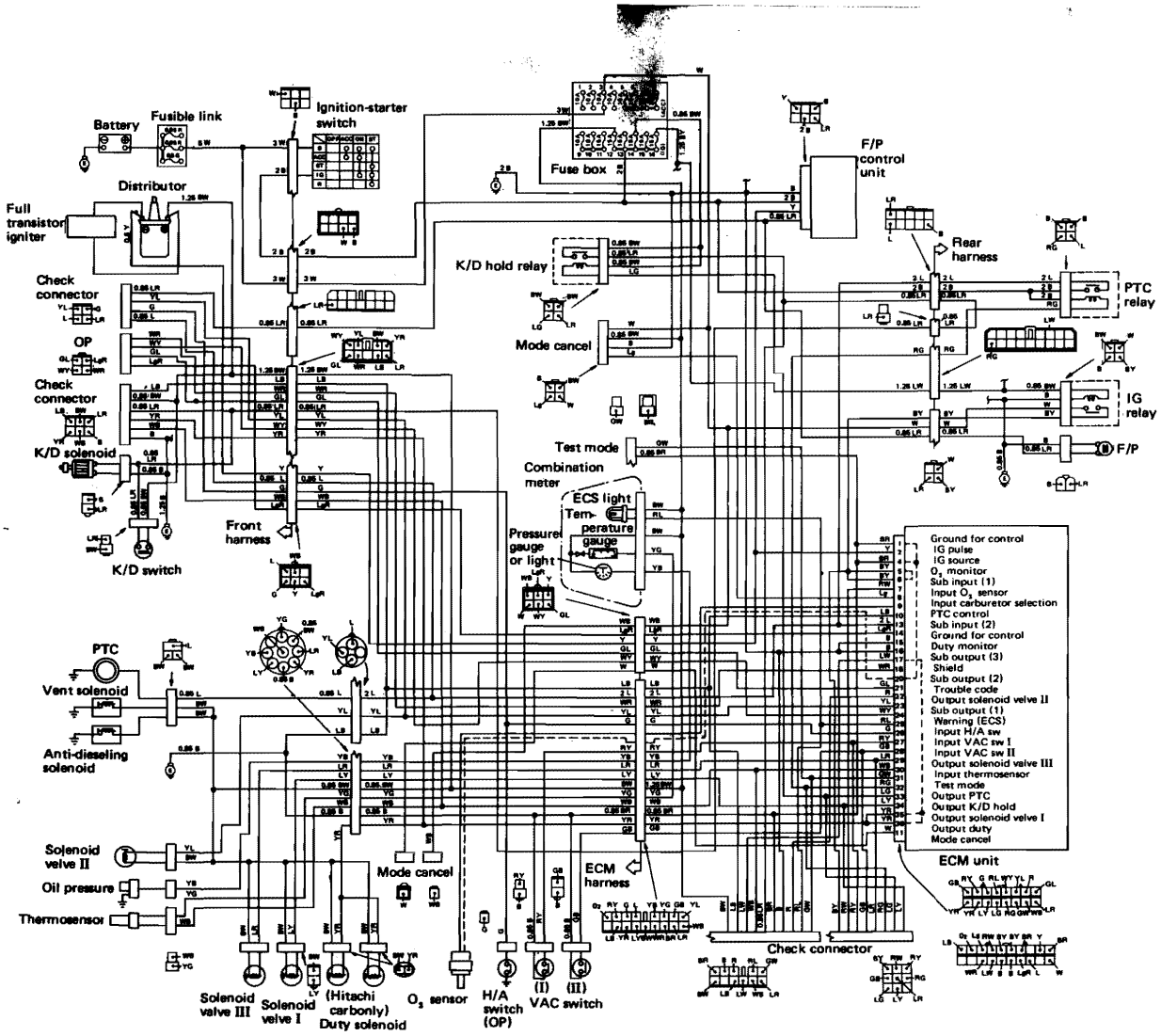

Fig. 5-7

Downloaded from www.Manualslib.com manuals search engine

2) Models Not Equipped with ECC System

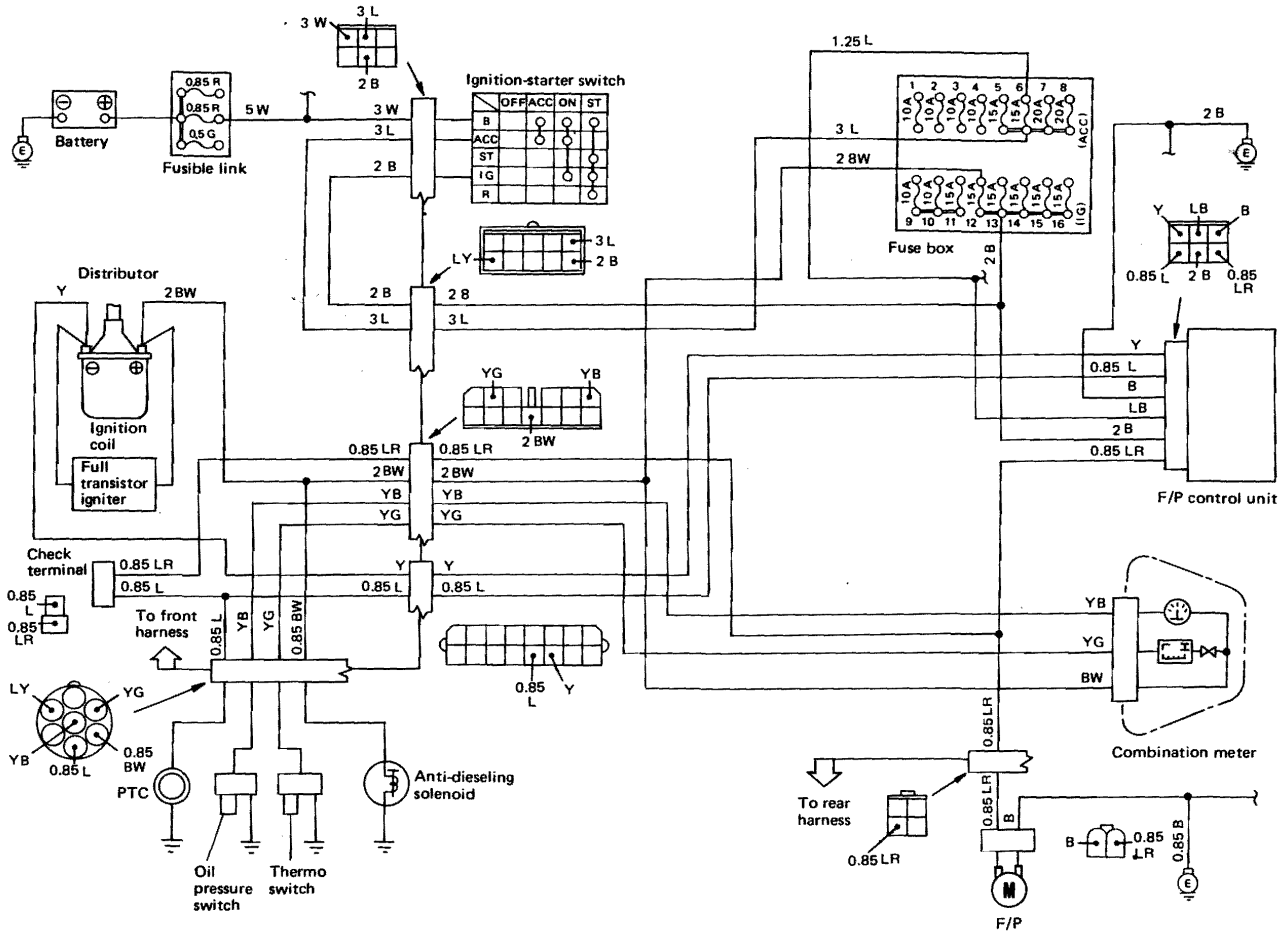

Fig. 5-8

Downloaded from www.Manualslib.com manuals search engine

3. Description

1) Three-way Catalyst Attended with ECC System

The basic material of three-way catalyst is platinum (Pt) and rhodium (Rh), and a thin film of their mixture is applied onto honeycomb or porous ceramics of an oval shape (carrier). To avoid damaging the catalyst, only unleaded gasoline should be used.

The catalyst is used to reduce HC, CO and NOx in exhaust gases, and permits simultaneous oxidation and reduction. To obtain an excellent purification efficiency on all components HC, CO and NOx, a balance should be kept among the concentrations of the components. These concentrations vary with the air-fuel ratio.

The air-fuel ratio needs to be controlled to a value within the very narrow range covering around the theoretical (stoichiometric) air-fuel ratio to purify the components efficiently.

Electronically Controlled Carburetor (ECC) system is employed with three-way catalyst for this purpose. ECC system is mainly made up of following component parts.

a. Oxygen (O_2) sensor
b. Electronic control module (ECM)
c. Duty solenoid
d. Carburetor

They compose a feedback system to control the air-fuel ratio during operation by supplying a measured air into air bleeders of the carburetor.

For high altitude configuration, the Hitachi carburetor is also provided with a circuit to supply air to the secondary main air bleed.

To avoid application of feedback during certain driving conditions, vacuum switches, a thermosensor and an engine speed sensing circuit are also provided in this system.

1) Component layout

1) California models and non-4WD of non-California models (Hitachi carburetor)

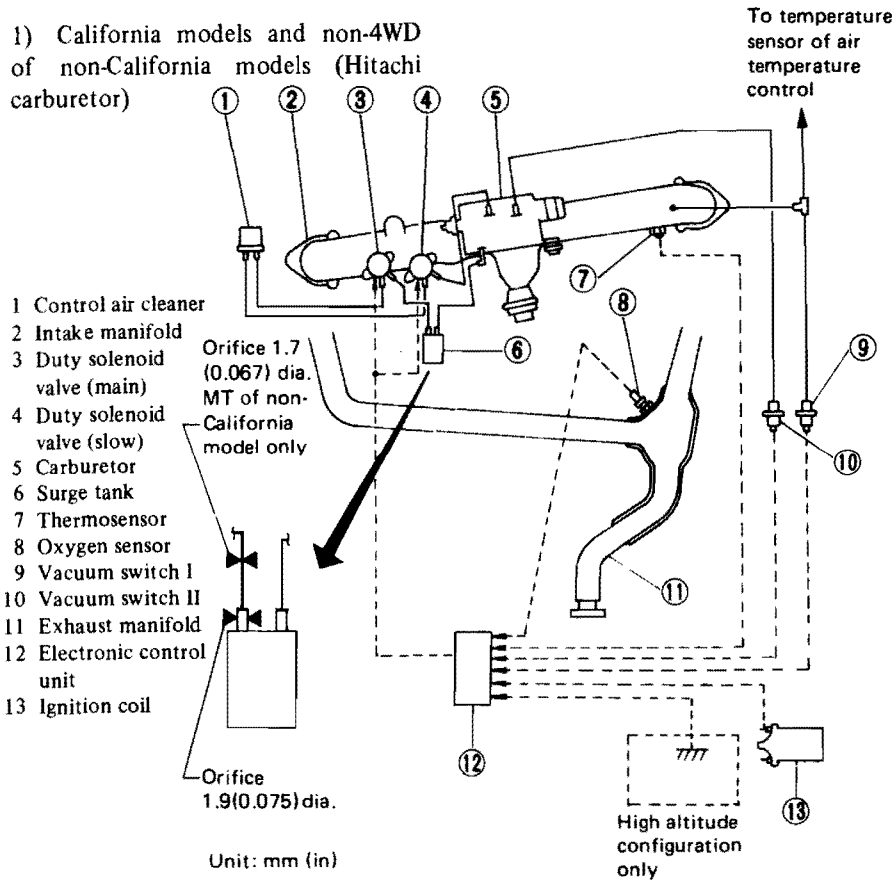

Fig. 5-9 A10-177

2) Non-4WD of non-California models (C-W carburetor)

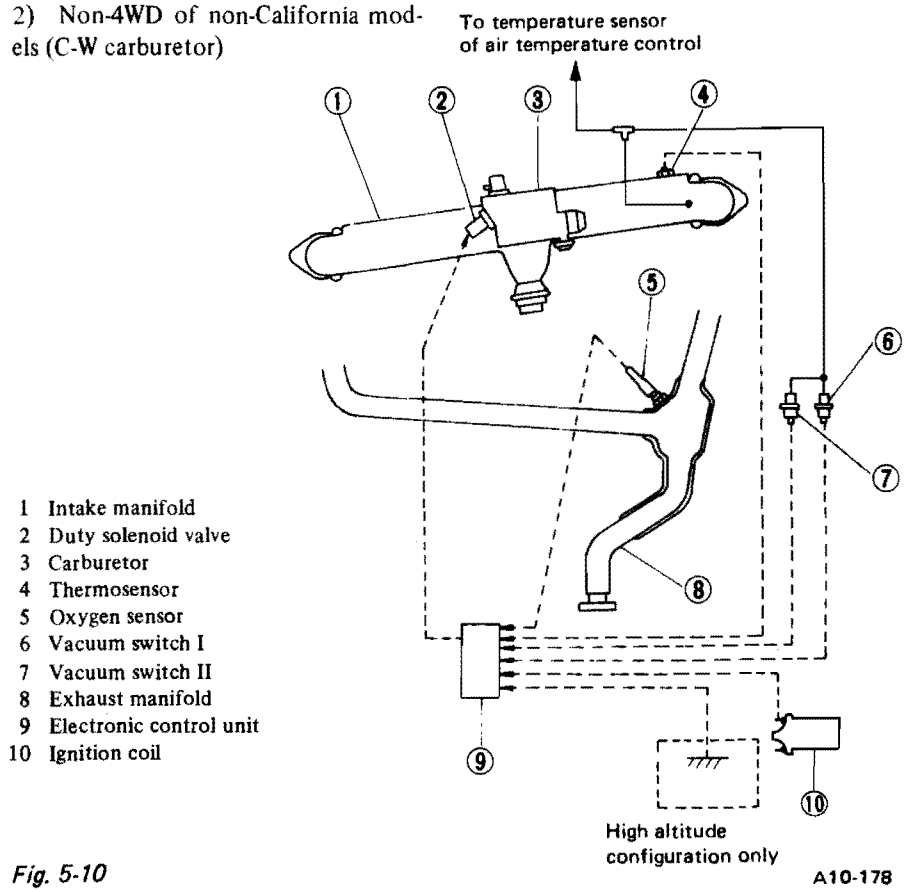

Fig. 5-10 A10-178

Downloaded from www.Manualslib.com manuals search engine

2) Component parts of ECC system

1) Oxygen (O_2) sensor

O_2 sensor is a kind of concentration cell that generates electromotive force according to the ratio of O_2 concentration in air to that in exhaust gases, and has a characteristic that the electromotive force is changed drastically with respect to the stoichiometric air-fuel ratio. The force is larger on the rich side (smaller air-fuel ratio) and smaller on the lean side (larger air-fuel ratio) of the mixture.

O_2 sensor is installed on exhaust manifold.

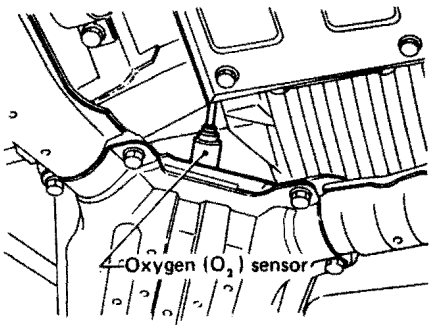

A5-679

Fig. 5-11

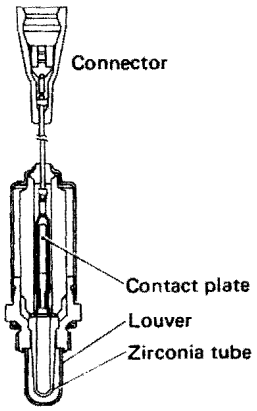

A10-180

Fig. 5-12 O_2 sensor

2) Electronic control module (ECM)

According to the signal from O_2 sensor, ECM judges whether the exhaust gas at the manifold is made from rich or lean mixture against the stoichiometric, and issues signals to duty solenoid valves. The current air-fuel ratio is judged to be rich mixture when the electromotive force of O_2 sensor is higher than the specified level. As the result, ECM issues signals to duty solenoid valves to let much air into carburetor.

On the other hand, the air-fuel ratio is judged to be lean mixture when the electromotive force is lower. ECM issues signals to duty solenoid valves to let a little air into carburetor so that the air-fuel ratio will be changed toward rich mixture. According to these feedback operations, the air-fuel ratio maintains at around the stoichiometric value.

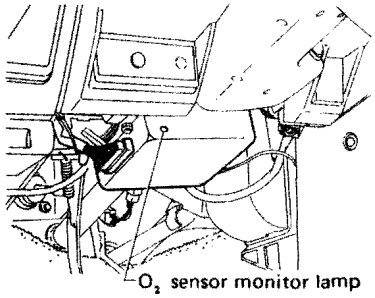

A10-181

Fig. 5-13 Electronic control module (ECM)

3) Duty solenoid valve

On Hitachi carburetor, two duty solenoid valves are installed on the intake manifold, while on C-W carburetor, one duty solenoid valve is unified in the carburetor as shown in the figure.

Duty solenoid valve has a construction as shown in the illustration.

The light-weight valve (A) repeats opening/closing at a short cycle according to the signal output from ECM.

The average flow rate of air passing through this valve to carburetor changes depending upon the period of time during which the valve is opened, thereby the air-fuel ratio is varied.

The status that a voltage is applied to solenoid, that is, the valve is lifted is called "ON-duty", and duty ratio is given by the following equation.

$$\text{Duty ratio} = \frac{\text{ON-duty time}}{\text{Cycle}} \times 100\%$$

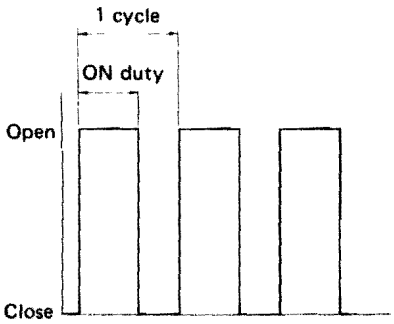

A10-093

Fig. 5-14

The ON-duty duration varies at a fixed acceleration, with the Rich-Lean mixture as measured by the O_2 sensor. In steady-state operation [where the vacuum switch (II) is on], the acceleration rate beyond a certain engine speed is changed in steps to obtain greater acceleration at higher engine rpm. This allows the valve to sensitively respond to the Rich-Lean mixture as measured by the O_2 sensor.

(Hitachi)

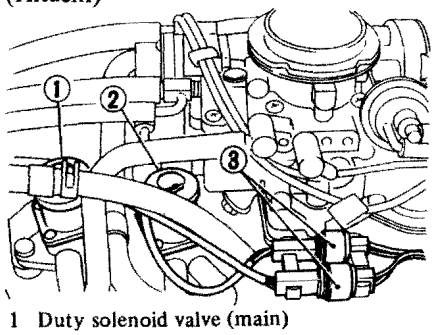

1 Duty solenoid valve (main)
2 Duty solenoid valve (slow)
3 Connectors

A10-141

(C-W)

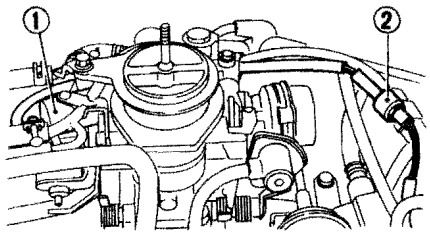

1 Feedback solenoid valve
2 Connector

A10-142

Fig. 5-15

Downloaded from www.Manualslib.com manuals search engine

(Hitachi)

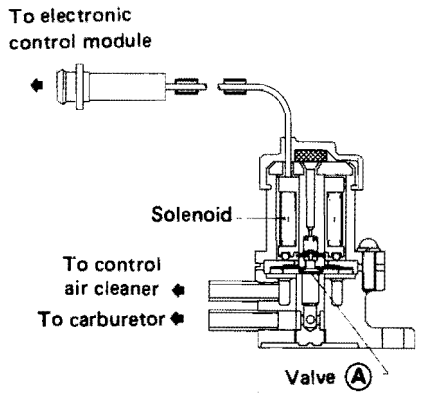

A10-092

(C-W)

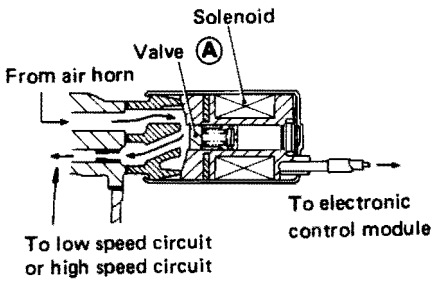

A10-143

Fig. 5-16

4) Vacuum switch (I), thermosensor and engine speed sensing circuit
These are additionally provided in the ECC system so that better drive-ability is assured by avoiding the application of feedback.

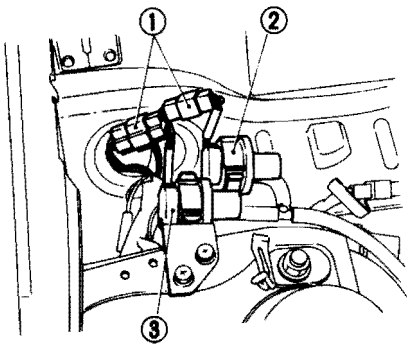

1 Connectors
2 Vacuum switch (II)
3 Vacuum switch (I)

A10-094

Fig. 5-17 Vacuum switch

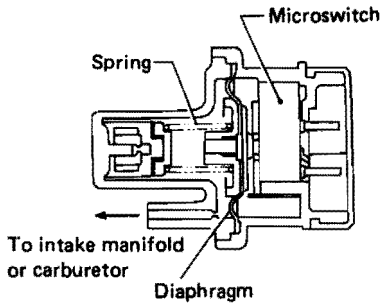

A10-145

Fig. 5-18 Vacuum switch

(Hitachi)

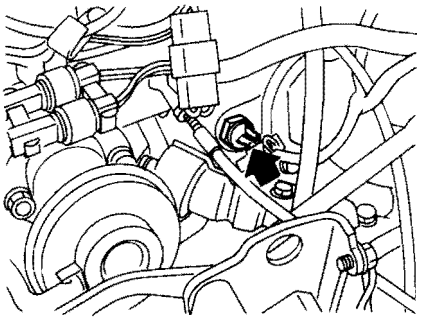

A10-146

(C-W)

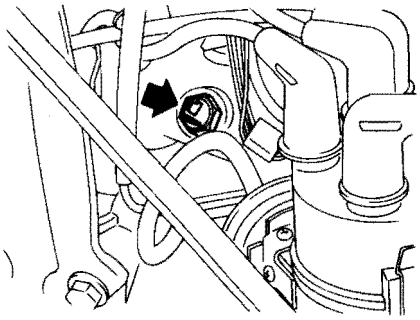

A10-147

Fig. 5-19 Thermosensor

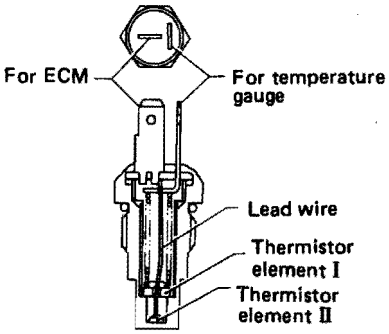

A10-148

Fig. 5-20 Thermosensor

5) Vacuum switch (II)
The acceleration (increasing/decreasing rate of the ON-duty duration) increases for several seconds immediately after this switch is turned off, allowing the valve to sensitively respond to the Rich-Lean mixture as measured by the O_2 sensor. After a lapse of 5 seconds, the acceleration returns to the steady-state operating condition.

3) Determination of the duty ratio is as follows.

	Item	Device
1	Carburetor	ECM
2	Water temperature	Thermosensor
3	Is O_2 sensor activated or not?	O_2 sensor
4	Engine rpm	Engine speed sensing circuit
5	Vacuum	Vacuum switch (I)
6	Sea level or high altitude?	Grounding wire (Optional)

Downloaded from www.Manualslib.com manuals search engine

2) Oxidation Catalyst

The basic material of the oxidation catalyst is as follows:
Canada models and 4WD of non-California models: Platinum (Pt) and Palladium (Pd)
Non-4WD of non-California models: Palladium (Pd) and Rhodium (Rh)
A thin film of their mixture is applied onto honeycomb or porous ceramics of an oval shape (carrier). To avoid damaging the catalyst, only unleaded gasoline should be used.
The catalyst is used to reduce HC, CO in exhaust gases.

3) Exhaust Gas Recirculation (EGR) System

Exhaust gas recirculation (EGR) system is aiming at reduction of NOx by reducing the top combustion temperature in cylinders through recirculating a part of exhaust gas into cylinders. The EGR valve opens in response to the engine driving conditions and a part of exhaust gas flows into cylinders through the intake manifold.
The vacuum signal to control the EGR valve is picked up from the port near the slightly up stream portion of throttle valve after being modulated with the atmospheric pressure through the orifice (EGR leak orifice equipped models). At the specific wall temperature of intake manifold or below, the vacuum signal is modulated with the atmospheric pressure through the thermo vacuum valve I.
Additionally for non-4WD of non-California models, the vacuum signal is modulated with the atmospheric pressure through solenoid valve II at the specified driving condition.

EGR leak orifice

mm (in)

		U.S.A.					Canada	
		California		Non-California				
		Non-4WD	4WD	4WD	Non-4WD Hitachi	Non-4WD C-W	Non-4WD	4WD
S/L	MT	0.7 (0.028)	–	0.5 (0.020)	0.7 (0.028)	0.8 (0.031)	0.7 (0.028)	0.5 (0.020)
	AT	–	–	–	–	–	–	–
H/A	MT	–	–	1.0 (0.039)	1.7 (0.067)	1.7 (0.067)	–	–
	AT	–	–	0.7 (0.028)	1.0 (0.039)	–	–	–

Canada models, California models and 4WD of non-California models

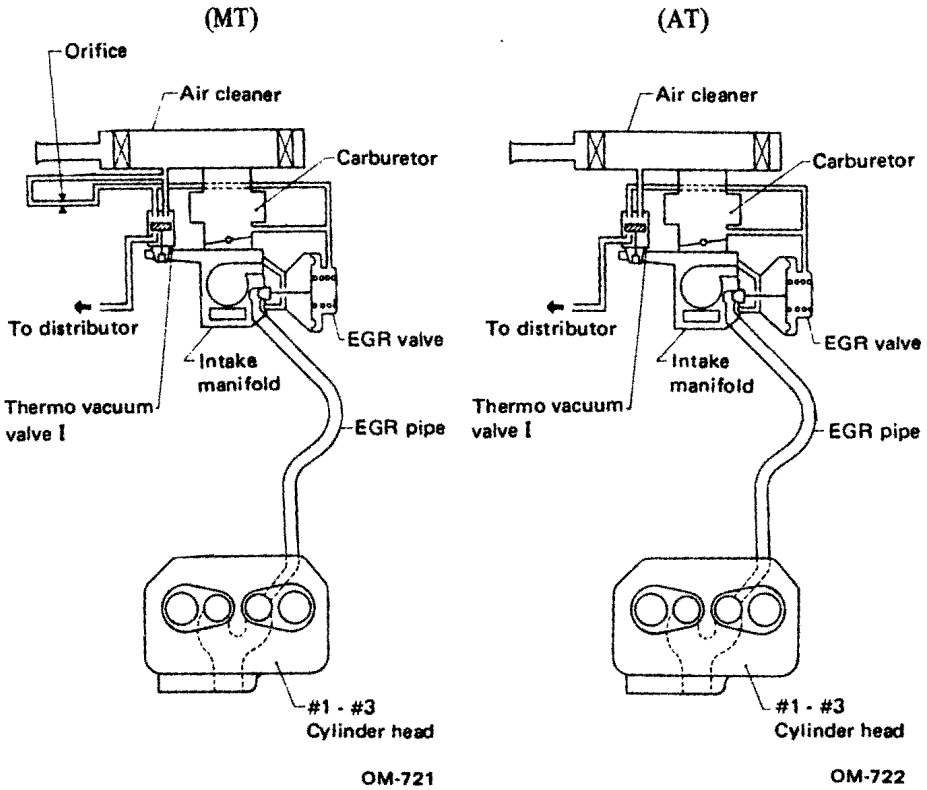

Fig. 5-21

Non-4WD of non-California models

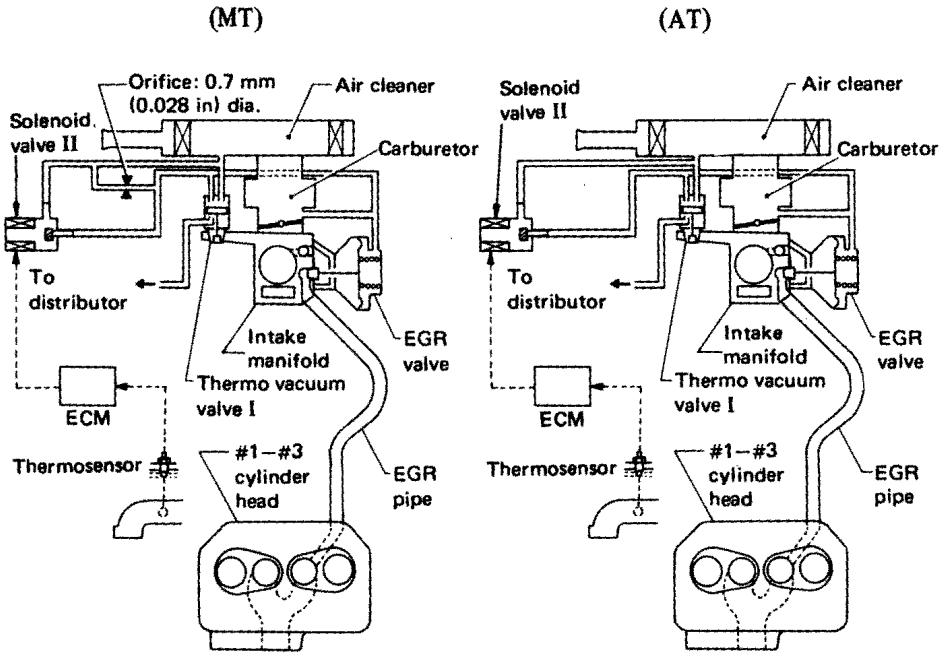

Fig. 5-22

Downloaded from www.Manualslib.com manuals search engine

4) Air Injection (AI) System

The AI system is a major emission control system whose purpose is to promote oxidation of hydrocarbons (HC) and carbon monoxide (CO) while the engine is cold.

1) California models

1) Component parts
- Air suction valve I (ASV) with cut-off valve
- Silencer
- Air suction pipe
- Air introduction hoses
- Air cleaner
- Thermosensor
- Solenoid valve I
- Check valve II
- ECM

Secondary air is supplied to the exhaust port on the #2–#4 cylinders side by ASV.

2) Operational principle

The exhaust gas pulsation is transmitted to the air suction valve (a kind of check valve having reed valves) through the air suction pipe.

When the negative pressure of pulsation is transferred to the ASV, the reeds of air suction valve are opened and simultaneously fresh air from the air cleaner is sucked by itself into the exhaust passage.

When, on the other hand, the positive pressure reaches the ASV, the reeds are closed to prevent the adverse flow of exhaust gas.

The AI system is controlled both by coolant temperature sensed by the thermosensor and time governed by the ECM.

When the coolant temperature is below 35°C (95°F), the ECM gives a command to open the intake manifold vacuum passage of the solenoid valve I for the period of 123 seconds, whereby the cutoff valve being opened by the diaphragm vacuum actuator to operate the ASV.

Under such driving condition as wide-open-throttle acceleration, the check valve closes the vacuum circuit to confine the vacuum so as to hold the cutoff valve open for that period.

After the period, the ECM gives a command to close the vacuum passage of the solenoid valve and open the atmospheric pressure passage, then the vacuum in the vacuum chamber of the cutoff valve goes out through the solenoid valve I, whereby the cutoff valve being closed to deactivate the ASV.

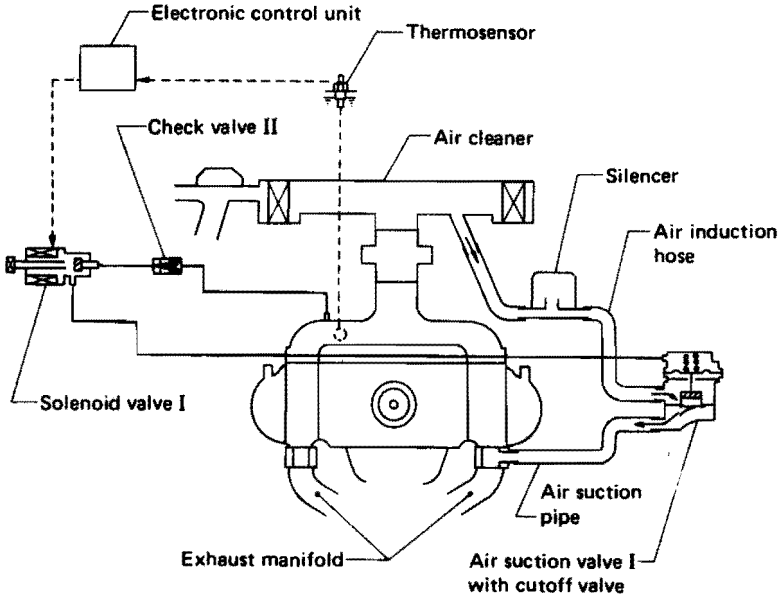

Fig. 5-23 AI system

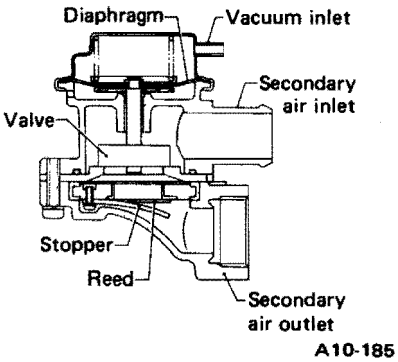

Fig. 5-24 ASV I with cutoff valve (Nippon Denso)

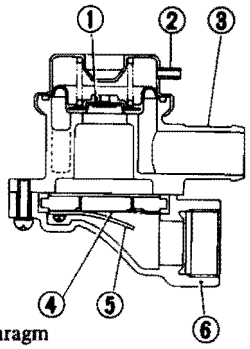

1 Diaphragm
2 Vacuum inlet
3 Secondary air inlet
4 Reed
5 Stopper
6 Secondary air outlet

A10-186

Fig. 5-25 ASV I with cutoff valve (NOK)

2) Canada models and 4WD of non-California models

1) Component parts
- ASV III without cutoff valve
- Silencer
- Air suction pipe
- Air introduction hose
- Air cleaner

Secondary air is supplied to the exhaust port on the #2–#4 cylinders side by ASV.

2) Operational principle

The exhaust gas pulsation is transmitted to the air suction valve (a kind of check valve having reed valves) through the air suction pipe.

When the negative pressure of pulsation is transfered to the ASV, the reeds of air suction valve are opened and simultaneously fresh air from the air cleaner is sucked by itself into the exhaust passage.

When, on the other hand, the positive pressure reaches the ASV, the reeds are closed to prevent the adverse flow of exhaust gas.

Downloaded from www.Manualslib.com manuals search engine

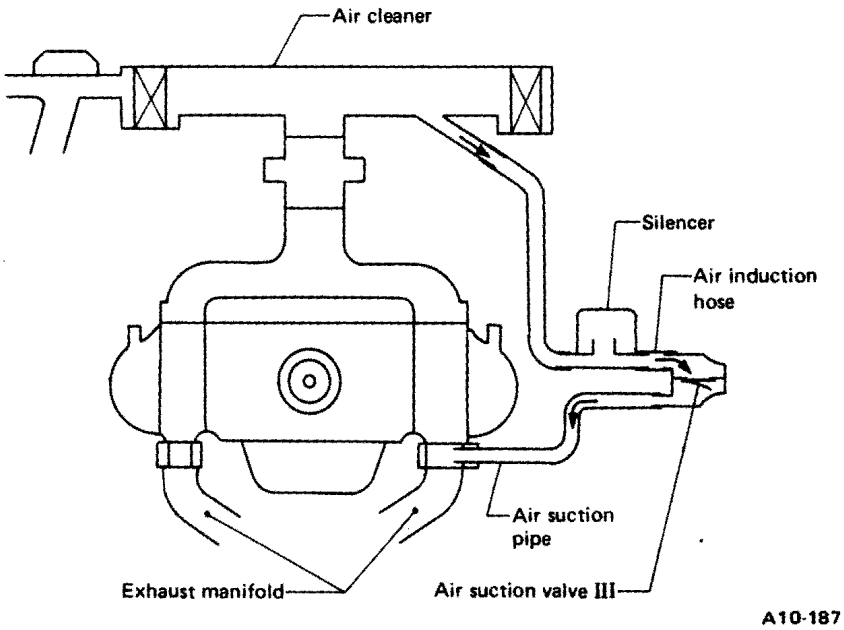

Fig. 5-26 AI system

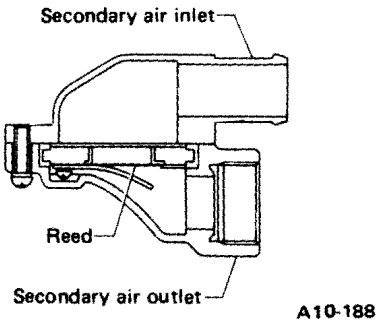

Fig. 5-27 ASV III without cutoff valve

3) **Non-4WD of non-California models**

1) Component parts
- Two ASVIs with cutoff valve
- ASV II without cutoff valve
- Air suction pipes
- Air introduction hoses
- Silencers
- Air cleaner
- Thermosensor
- Solenoid valve I
- Check valve II
- ECM

Secondary air is supplied to the exhaust ports on #1–#3 and #2–#4 cylinders sides by ASV with cutoff valve.

Also the secondary air is supplied to the exhaust port near the up stream portion of oxidation catalyst by ASV without cutoff valve that is installed on rear exhaust pipe.

2) Operational principle

The exhaust gas pulsation is transmitted to the air suction valve (a kind of check valve having reed valves) through the air suction pipe.

When the negative pressure of pulsation is transfered to the ASV, the reeds of air suction valve are opened and simultaneously fresh air from the air cleaner is sucked by itself into the exhaust passage.

When, on the other hand, the positive pressure reaches the ASV, the reeds are closed to prevent the adverse flow of exhaust gas.

An ASV without cutoff valve always operates regardless of coolant temperature and ECM signal. On the other hand, two ASVs with cutoff valves are controlled both by coolant temperature sensed by the thermosensor and time governed by the ECM.

When the coolant temperature is below 35°C (95°F), the ECM gives a command to open the intake manifold vacuum passage of the solenoid valve I for the period of 123 seconds, whereby the two cutoff valves being opened by the diaphragm vacuum actuator to operate the two ASVs.

Under such driving condition as wide-open-throttle acceleration, the check valve closes the vacuum circuit to confine the vacuum so as to hold the cutoff valve open for that period.

After the period, the ECM gives a command to close the vacuum passage of the solenoid valve and open the atmospheric pressure passage, then the vacuum in the vacuum chambers of the cutoff valves goes out through the solenoid valve I, whereby the two cutoff valves being closed to deactivate the two ASVs.

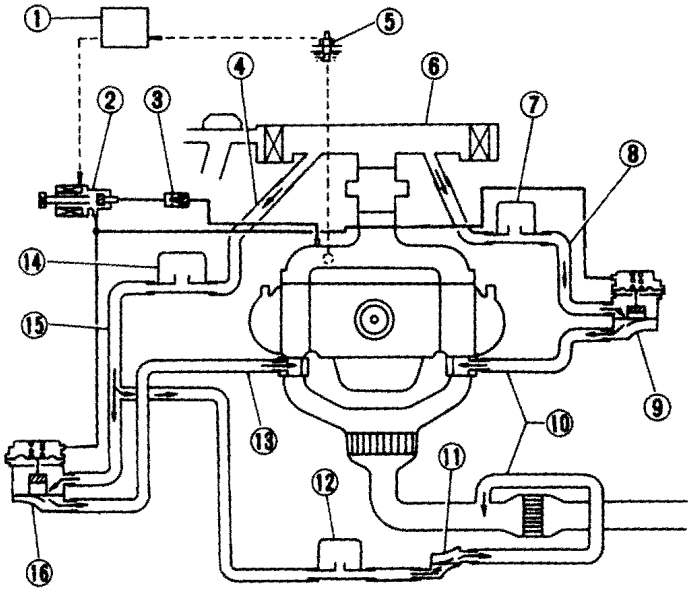

1 Electronic control module
2 Solenoid valve I
3 Check valve II
4 Air induction hose
5 Thermosensor
6 Air cleaner
7 Silencer
8 Air induction hose
9 Air suction valve I with cutoff valve
10 Air suction pipe
11 Air suction valve II
12 Silencer
13 Air suction pipe
14 Silencer
15 Air induction hose
16 Air suction valve I with cutoff valve

Fig. 5-28 AI system

A10-189

Downloaded from www.Manualslib.com manuals search engine

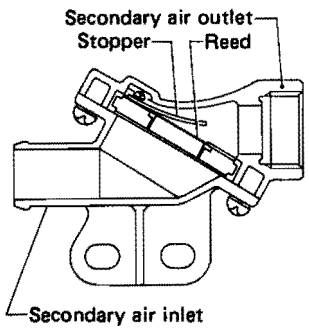

A10-190

Fig. 5-29 ASV II without cutoff valve

NOTE:
ASV I with cutoff valve is the same as that for California models.

5) Ignition Control System

Ignition control system is aimed to reduce HC, CO and NOx emission through the whole operating conditions. Actual ignition timing is controlled by the combination of a centrifugal advancer and a vacuum controller (advancer) of distributor.
Operational and constitutional description of the centrifugal advancer is performed in "Chapter 15; Distributor", so here is described how to controll the vacuum signal for the vacuum controller (advancer).

(Vacuum signal for the vacuum controller)

	Vacuum signal (Advance signal only)
1600 cc	Between 15 to 35°C (59 to 95°F) of the intake manifold wall temperature, the vacuum passage is opened to atmospheric pressure through the thermo vacuum valve I. At temperature other than the above-mentioned, the vacuum passage is connected to below-throttle ported vacuum through the check valve when the engine is idling, and the vacuum passage is connected to above-throttle ported vacuum due to the check valve being closed when the engine is running at speed above idling.
1800 cc	Between 15 to 35°C (59 to 95°F) of the intake manifold wall temperature, the vacuum passage is opened to atmospheric pressure through the thermo vacuum valve I. At temperature other than the above-mentioned, the vacuum passage is connected to above-throttle ported vacuum.

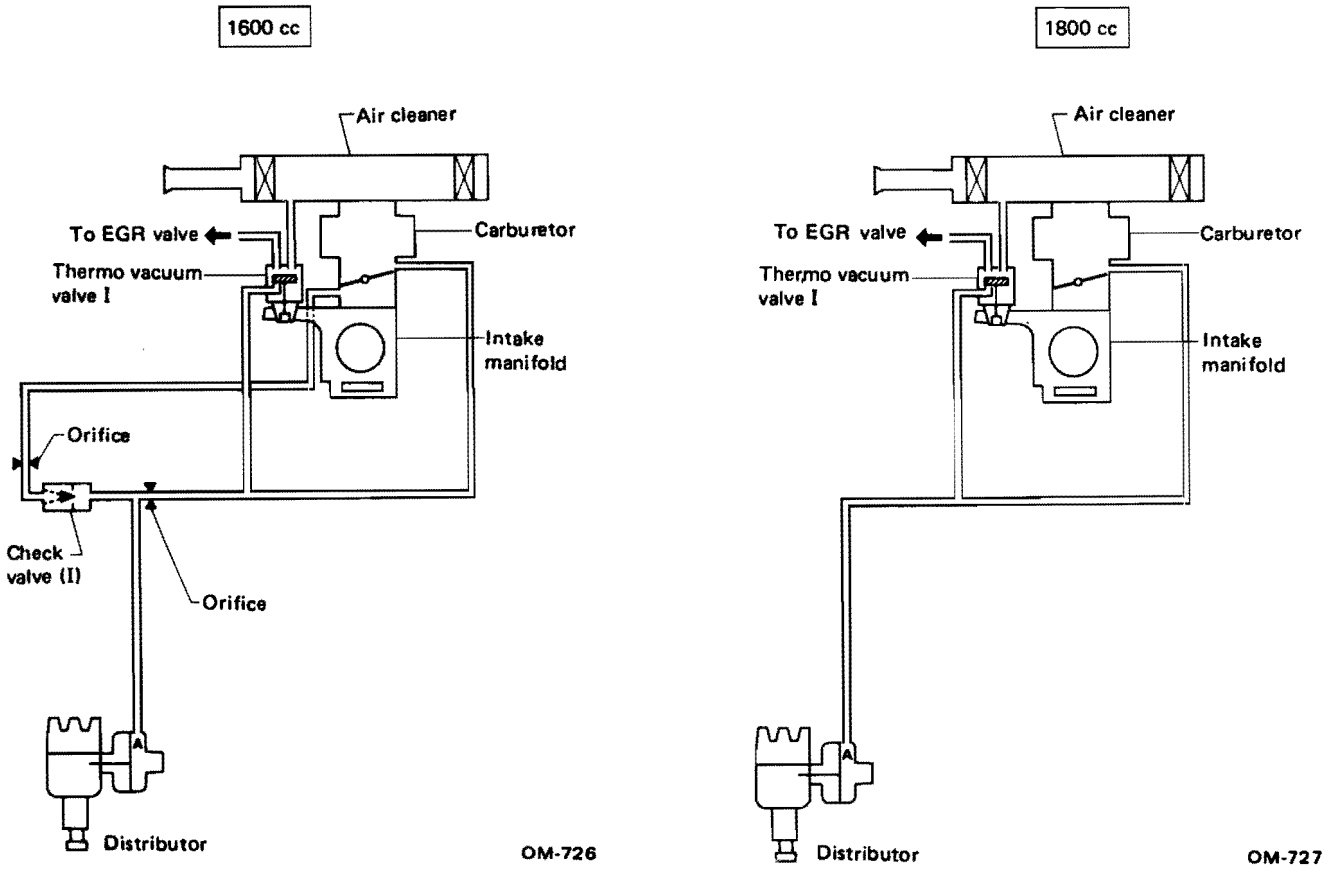

Fig. 5-30

Downloaded from www.Manualslib.com manuals search engine

6) Anti-afterburning System

During rapid deceleration the air-fuel mixture becomes heavily concentrated temporarily, as the vacuum pressure in the intake manifold increases, causing fuel residue on the inside wall of the manifold to vaporize and to enter the combustion chamber.

The anti-afterburning system prevents this heavy concentration from occurring by introducing air into the intake manifold at this time. This prevents afterburning in the exhaust system.

During constant-speed running, the valve is closed because chambers Ⓐ and Ⓑ are at the same pressure. In deceleration (when the throttle valve is closed), the vacuum pressure in the intake manifold increases and the pressure in chamber Ⓑ decreases. The diaphragm is forced down to open the valve. This permits outer air to be drawn into the intake manifold through the filter.

After that, the pressure in chamber Ⓐ gradually becomes equal to that of chamber Ⓑ as the air flows through the orifice. The diaphragm is then pushed up by the spring, which in turn closes the valve to stop the suction of air.

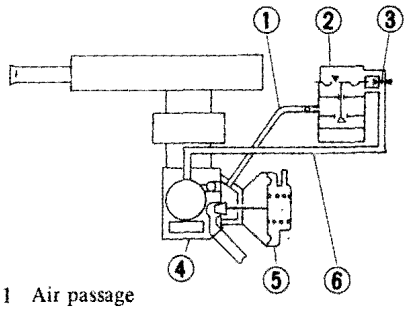

1 Air passage
2 Anti-afterburning valve
3 Orifice
4 Intake manifold
5 EGR valve
6 Vacuum line

A10-191

Fig. 5-31 Anti-afterburning system

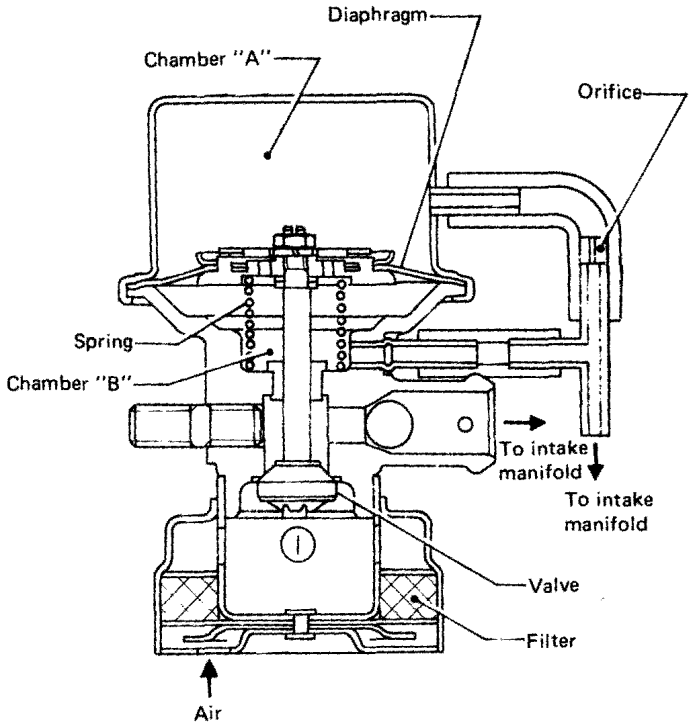

A10-192

Fig. 5-32 Anti-afterburning valve

7) Shift-up Control System

Shift-up control system is provided on automatic transmission vehicle only and is used to reduce CO emission due to rapid warm-up.

If the engine is started while the coolant is in the preset temperature range, ECM keeps the automatic transmission in a kick-down state for a certain duration of time.

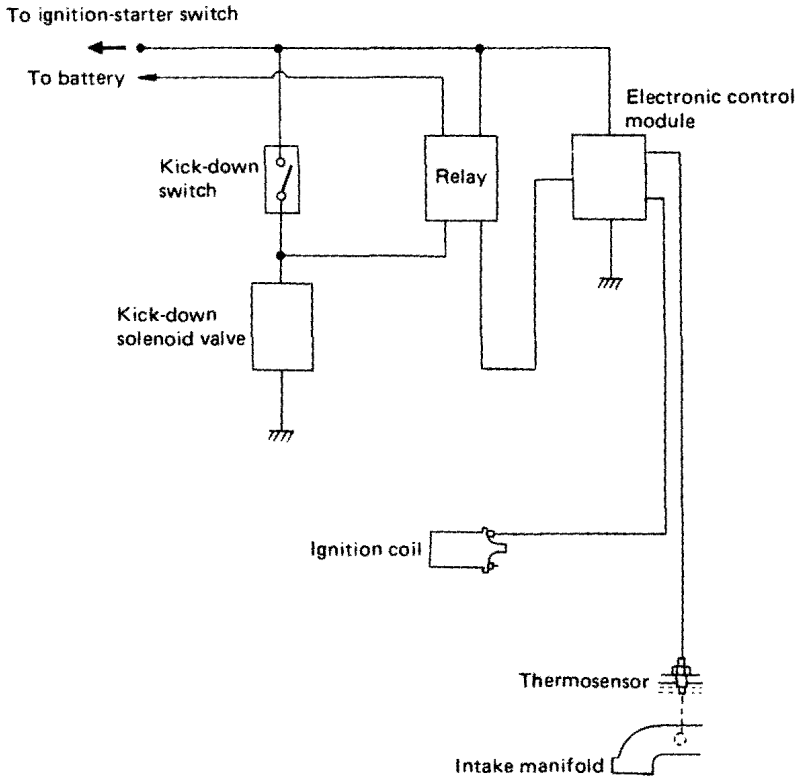

A10-193

Fig. 5-33

Downloaded from www.Manualslib.com manuals search engine

8) High-altitude Kit

When principally operating the vehicle at altitudes above 1,200 m (4,000 ft) (areas prescribed in the paragraph (a) (5) of section 86.082-30 of EPA regulation), the emission control system requires minor modification to meet the emission standards at high-altitude. Regarding the modification, please refer to the modification instruction sheet enclosed in the high altitude kit.

When a vehicle modified to high-altitude specifications is principally used at altitudes below 1,200 m (4,000 ft) (other than areas prescribed in the paragraph (a) (5) of section 86.082-30 of EPA regulation), the emission control system must be remodified to the original specifications.
Regarding the remodification, please restore the relative parts to their original specifications.

4. Inspection

Check the ECC system as a whole system, and its description is performed in the next section "5. Troubleshooting for ECC system". Therefore, here is described how to inspect component parts of the other systems.

1) EGR System

1) EGR valve and EGR flow passages (Vacuum and exhaust gas)

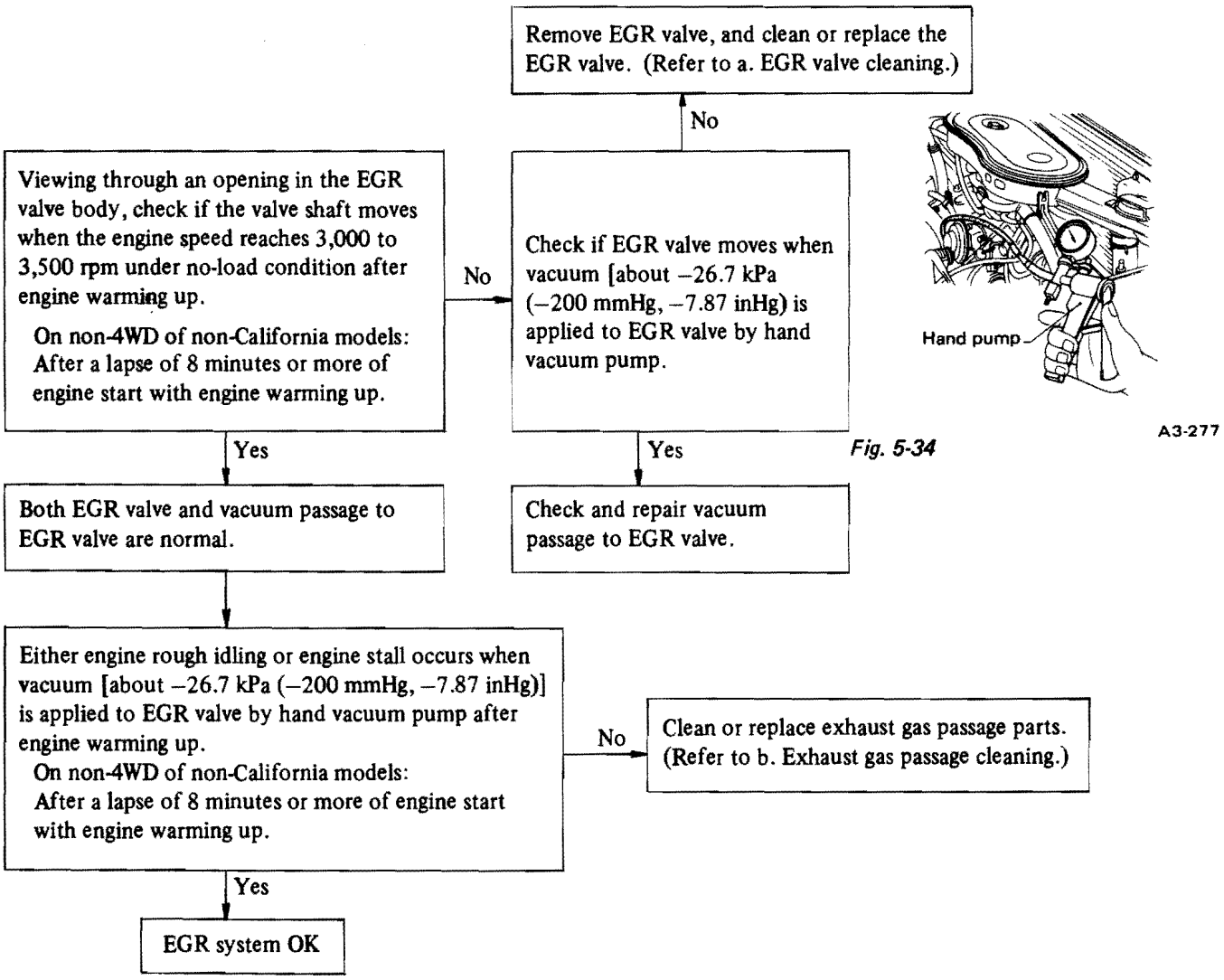

Fig. 5-34

Downloaded from www.Manualslib.com manuals search engine

a. EGR valve cleaning

CAUTION:
Do not wash valve ASSY in solvents or degreaser as permanent damage to valve diaphragm may result.

(1) Hold the valve ASSY in hand, then tap lightly on the sides and end of the valve with a small plastic hammer to remove the exhaust deposits from the valve seat. Empty loose particles. DO NOT PUT IN A VISE.
(2) With a wire wheel or deposit cleaning tool, buff the exhaust deposits from the mounting surface and around the valve.
(3) Depress the valve diaphragm and look at the valve seating area through the valve outlet for cleanliness. If valve and/or seat are not completely clean, repeat Step (1).
(4) Look for exhaust deposits in the valve outlet. Remove built-up deposite with a screwdriver.
(5) Blow out small particles and dust remaining with air hose.
(6) Check EGR valve operation by applying –26.7 kPa (–200 mmHg, –7.87 inHg) vacuum with hand vacuum pump. If valve does not open completely, replace EGR valve with a new part.

NOTE:
When reassembling EGR valve, replace EGR valve gasket with a new one.

b. Exhaust gas passage cleaning
(1) Inspect EGR gas inlet to intake manifold for presence of deposits. Remove any deposits present with a hooked awl taking care to minimize the amount of material falling into the intake manifold.
DO NOT USE AN ELECTRIC DRILL.
(2) Remove all deposit material using a vacuuming device.
(3) Examine EGR Gas Inlet for exhaust deposits. If excess deposits present, (more than 5 to 10% blockage of the passage), remove EGR pipe. Tap lightly on the sides of the EGR pipe with a small plastic hammer to loosen exhaust deposits. Remove loose exhaust deposits by blowing through EGR pipe using compressed air. Reassemble EGR pipe.
(4) Inspect and clean EGR valve as required (See a. EGR valve cleaning).

2) **Thermo vacuum valve (I)**

1) Connect vinyl tubes to output ports to air cleaner and EGR valve, and plug the output port to distributor with a cap. Blow air into the valve as shown in the illustration, and confirm that the valve opens or closes in response to intake manifold wall temperature as specified.

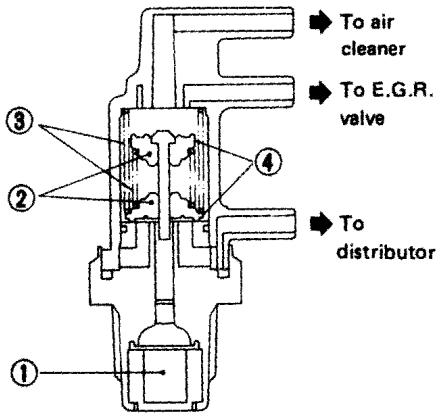

1 Wax
2 Valve
3 Spring
4 Valve seat

A10-105

Fig. 5-35 Thermo vacuum valve (I)

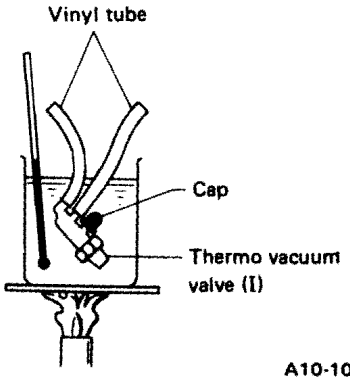

Fig. 5-36

Thermo vacuum valve (I) should be open below 30°C (86°F) completely and close above 40°C (104°F) completely. If out of specification, replace it with a new one.

NOTE:
Do not allow water to get into thermo vacuum valve (I).

2) Connect vinyl tubes to output ports to EGR valve and distributor, and plug the output port to air cleaner with a cap. Blow air into the valve as shown in the illustration, and confirm that the valve opens or closes in response to intake manifold wall temperature as specified.

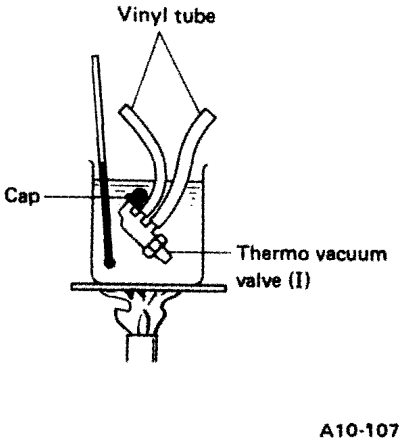

Fig. 5-37

Thermo vacuum valve (I) should be open above 20°C (68°F) completely and close below 10°C (50°F) completely.

Downloaded from www.Manualslib.com manuals search engine

3) Solenoid valve II

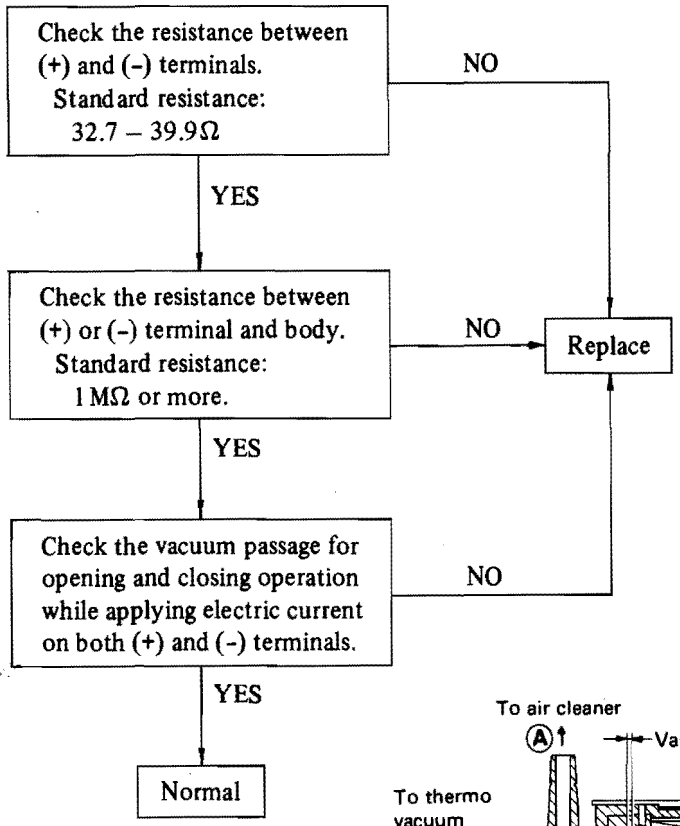

NOTE:
Usually (when the current is OFF), the plunger is forced upwards by the spring force to close the passage between Ⓐ and Ⓑ.
When the current is ON in the solenoid, the plunger is attracted downwards to open the passage between Ⓐ and Ⓑ.

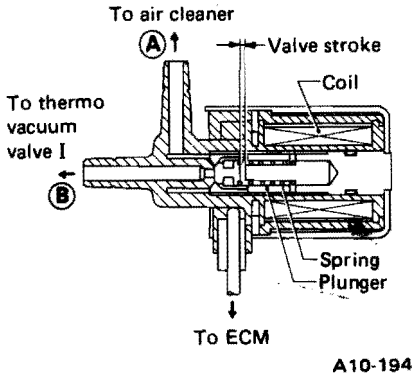

Fig. 5-38 Solenoid valve II

2) AI System

1) ASV

1) ASV I with cutoff valve (Nippon Denso)

a. Disassembly

(1) Separate the control valve ASSY, valve seat, and reed valve cover by removing 3 screws.

(2) Remove the reed valve ASSY and gasket from the inside of the valve cover.

(3) Remove the O-ring from the control valve ASSY.

b. Inspection

(1) Control valve ASSY
Apply a vacuum to the vacuum inlet pipe to determine if the control valve operates normally.

(2) O-ring
Check for scratches, cracks, etc.

(3) Reed valve ASSY and gasket
- Gasket
  Check for damage and cracks.
- Reed valve ASSY
  After washing with gasoline, check the ASSY to ensure that it is free of the following defects:
  a) Waves, cracks, or dents in the reed valve seat.
  b) A cracked or broken point of the reed valve.
  c) A rusty stopper.

c. Assembly
Assemble in the reverse order of disassembly.

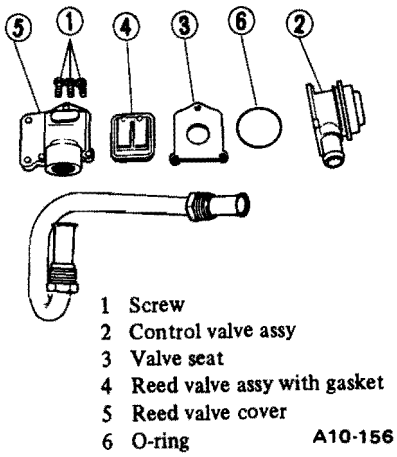

Fig. 5-39 ASV I with cutoff valve (Nippon Denso)

2) ASV I with cutoff valve (NOK)

a. Disassembly

(1) Separate the control valve ASSY and reed valve cover by removing 3 screws.

(2) Remove the reed valve ASSY and gasket from the inside of the valve cover.

b. Inspection

(1) Control valve ASSY
Apply a vacuum to the vacuum inlet pipe to determine if the control valve operates normally.

(2) Reed valve ASSY and gasket
- Gasket
  Check for damage and cracks.
- Reed valve ASSY
  After washing with gasoline, check the ASSY to ensure that it is free of the following defects:
  a) Waves, cracks, or dents in the reed valve seat.
  b) A cracked or broken point of the reed valve.
  c) A rusty stopper.

c. Assembly
Assemble in the reverse order of disassembly.

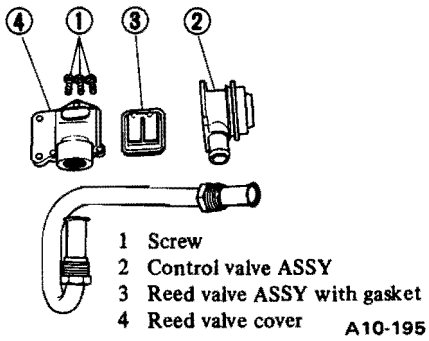

Fig. 5-40 ASV I with cutoff valve (NOK)

Downloaded from www.Manualslib.com manuals search engine

3) ASV II and III without cutoff valve (NOK)

a. Disassembly

(1) Separate inlet case from outlet case by removing 3 screws.

(2) Remove reed valve ASSY and gasket from the inside of outlet case.

b. Inspection

(1) Inlet case and outlet case
Check for damage and cracks.

(2) Reed valve ASSY and gasket

- Gasket
  Check for damage and cracks.
- Reed valve ASSY
  After washing with gasoline, check the ASSY to ensure that it is free of the following defects:
  a) Waves, cracks, or dents in the reed valve seat.
  b) A cracked or broken point of the reed valve.
  c) A rusty stopper.

c. Assembly
Assemble in the reverse order of disassembly.

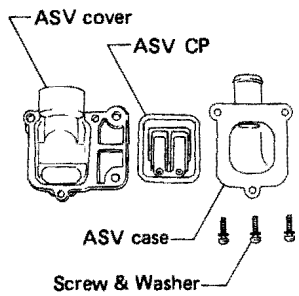

Fig. 5-41 ASV III without cutoff valve (NOK)

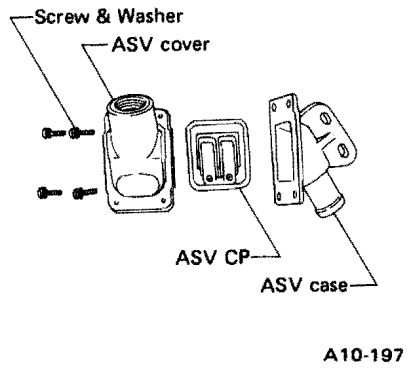

Fig. 5-42 ASV II without cutoff valve (NOK)

2) **Solenoid valve I**

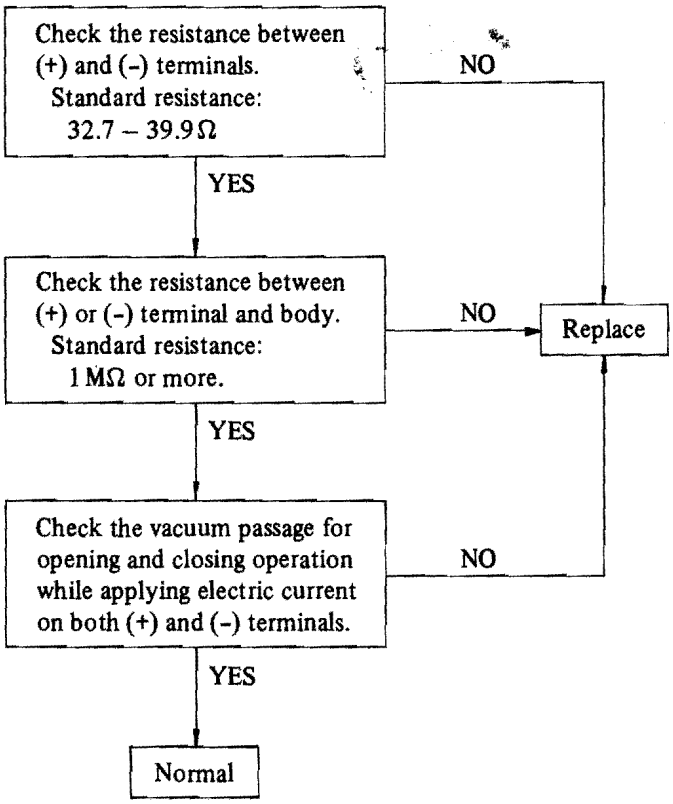

NOTE:
Usually (when the current is OFF), the plunger is forced upwards by the spring force to close the passage between Ⓐ and Ⓑ, and to open the passage between Ⓑ and Ⓒ.
When the current is ON in the solenoid, the plunger is attracted downwards to open the passage between Ⓐ and Ⓑ, and to close the passage between Ⓑ and Ⓒ.

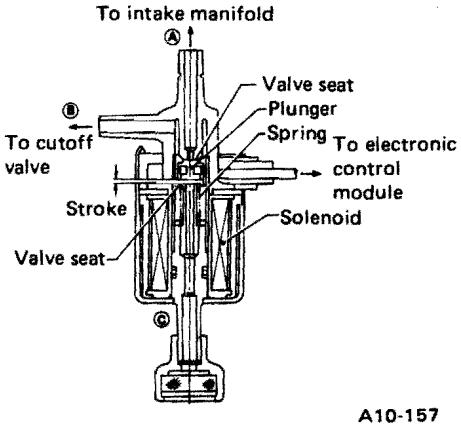

Fig. 5-43

Downloaded from www.Manualslib.com manuals search engine

3) Check valve II

1) Confirm that there is no air flow from the carburetor side to the distributor side.
2) Confirm that there is air flow from the distributor side to the carburetor side.

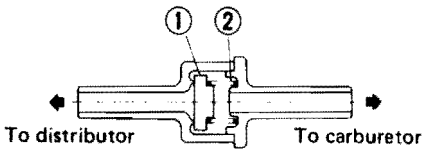

1 Valve
2 Spring

A10-108

Fig. 5-44 Check valve

3) Ignition Control System

1) Thermo vacuum valve (I):

Refer to "EGR system".

2) Check valve (II):

Refer to "AI system".

4) Anti-afterburning System

1) Air passage hose

Check hose and its connection for leakage and looseness. If leakage is found, replace it with new one.

2) Vacuum line

Check vacuum line for leakage and looseness as follows.
1) Disconnect the vacuum hose from AAV, then run the engine.
2) Confirm that air is sucked into the vacuum hose.
3) If not, vacuum line is defective.

3) AAV

Holding a paper under the AAV, run engine up to 3,000 rpm then close the throttle valve quickly. If the paper is sucked at this moment, the AAV operates normally. If not, the AAV is defective. Replace it with new one.

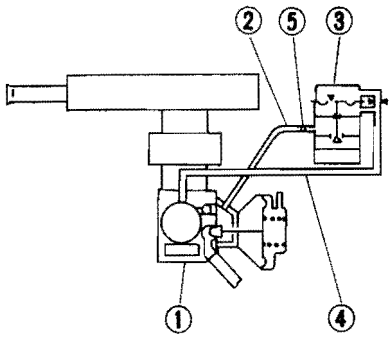

1 Intake manifold
2 Air passage
3 Anti-afterburning valve
4 Vacuum line
5 Ball

A10-198

Fig. 5-45 Anti-afterburning system

5. Troubleshooting for ECC System

1) Outline

The air-fuel ratio in the carburetor is compensated by turning ON or OFF the compensation air circuit of the duty solenoid valve at an appropriate duty ratio according to the operating condition.
Note that the duty changes from time to time, being controlled by various sensors. Accordingly, if the duty for the duty solenoid valve is improper, some malfunction occurs in the car.
Described below are the main points of troubleshooting the ECC system.

1) Self-diagnosing function

This system has a self-diagnosing function. When trouble occurs, the ECS (Electric Control System) lamp is illuminated and the trouble code is displayed on the O_2 monitor lamp in Morse Code.

2) Changeover from regular mode to test mode

The self-diagnosing function is available in two modes: Regular Mode and *Test Mode. It is automatically changed over to the test mode by connecting the test mode connector. (The test mode connector must always be disconnected after tests.)

* Test mode is a special mode provided for the dealer to perform self-diagnosis quickly.

3) Relations between self-diagnosis, ECS lamp, and O_2 monitor lamp

	Diagnosis in progress	Diagnosis result on display			
		Regular mode		Test mode	
		OK	NG	OK	NG
ECS lamp	OFF	OFF	ON	Flickers	ON
O_2 monitor lamp	O_2 monitor	O_2 monitor	Trouble code	O_2 monitor	Trouble code

Downloaded from www.Manualslib.com manuals search engine

4) How to see trouble code

Example: 23

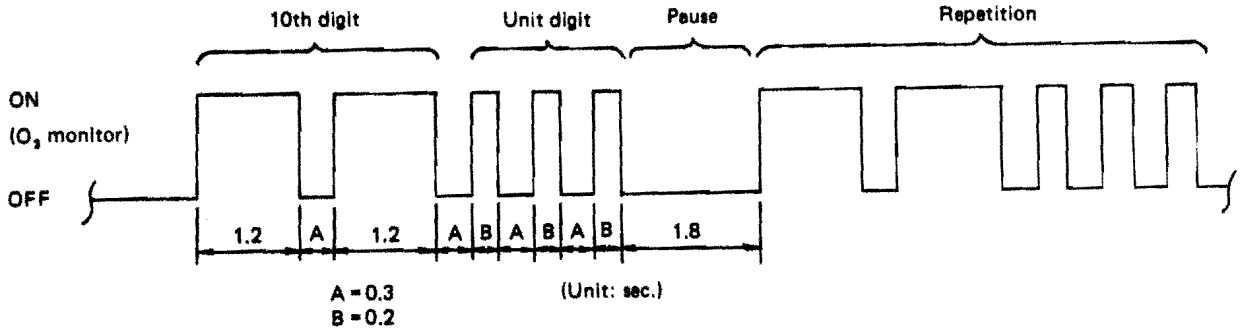

NOTE:

a. The trouble code is displayed repeatedly.

b. When multiple problems have occurred, all their trouble codes are displayed repeatedly in numerical order.

5) List of trouble codes

Trouble code	Item	Remarks
12	Ignition pulse sys. (NG) (Engine in OFF)	Carter carb. (sea level mode)
11		Carter carb. (high altitude mode)
22		Hitachi carb. (sea level mode)
21		Hitachi carb. (high altitude mode)
23	O_2 sensor sys. (NG)	
32	Thermo sensor sys. (NG)	
14	Vacuum switch I remains OFF	In test mode only
41	Vacuum switch I remains ON	
24	Vacuum switch II remains OFF	
42	Vacuum switch II remains ON	
13	Duty solenoid valve remains OFF	
31	Duty solenoid valve remains ON	
25	Solenoid valve I remains OFF	
52	Solenoid valve I remains ON	
15	Solenoid valve III remains OFF	
51	Solenoid valve III remains ON	
34	Auto choke power remains OFF	
43	Auto choke power remains ON	
33	Main system in feedback system (NG)	In test mode only

6) The self-diagnosing functions for the EGR system and shift-up control system are not provided. So one must carry out checks and make repairs according to the troubleshooting flow chart contained herein.

NOTE:

a. Before performing the troubleshooting, check if the respective connectors, air hoses and vacuum hoses are connected properly, end also check all parts and electric wirings for scratches or damage.

b. Be sure to turn OFF the ignition-starter switch before replacing a defective part, and reconnect the hoses and connectors completely after that.

2) Requisites for Checking and Their Usages

In the section "3) Troubleshooting chart", requisites for checking and their usages are as follows.

1) A circuit tester

a. A circuit tester is used to measure voltage and resistance between terminals of check connectors (I ~ IV) with it connected or disconnected.

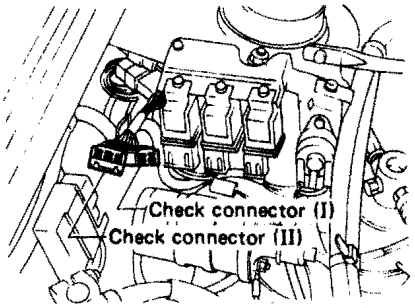

A10-199

Fig. 5-46 Measuring voltage (in engine room)

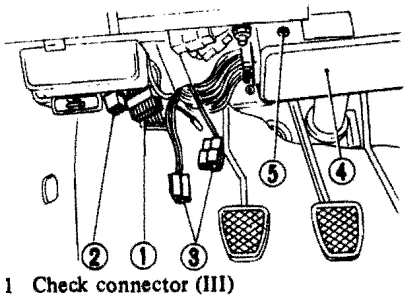

1 Check connector (III)
2 Check connector (IV)
3 Test mode connector
4 ECM
5 O_2 monitor lamp

A10-200

Fig. 5-47 Measuring voltage (in passenger room)

Downloaded from www.Manualslib.com manuals search engine

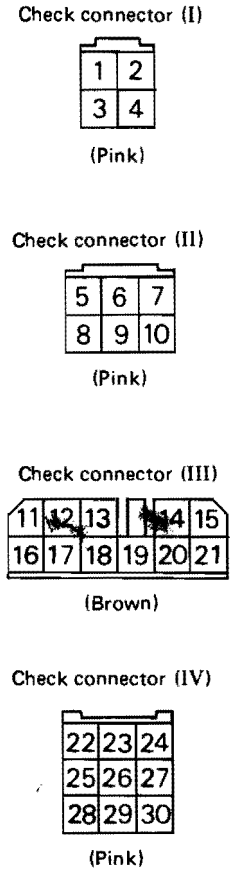

1 To solenoid valve II (Y/L)
2 To high altitude signal (G)
3 To auto choke (0.85-L)
4 To fuel pump (0.85-L/R)
5 To selection for carburetor (L/B)
6 To ignition switch (0.85-B/W)
7 To kick-down solenoid valve (0.85-L/R)
8 To duty solenoid valve (Y/R)
9 To thermosensor (W/B)
10 To ground (B)
11 To ground for control (B/R)
12 To ground (B)
13 To trouble code (R)
14 To warning lamp (R/L)
15 To test mode (G/W)
16 To ignition switch (0.85-B/W)
17 To solenoid valve II (Y/L)
18 To selection for carburetor (L/B)
19 To duty monitor (L/W)
20 To thermosensor (W/B)
21 To kick-down solenoid valve (0.85-L/B)
22 To power supply for ECM (B/Y)
23 To O_2 sensor monitor (R/W)
24 To vacuum switch (I) (R/Y)
25 To vacuum switch (II) (G/B)
26 To solenoid valve III (L/R)
27 To auto choke relay (R/G)
28 To kick-down relay (L/G)
29 To solenoid valve I (L/Y)
30 ———

A10-201

Fig. 5-48 Temrinals of check connector

NOTE:
Be sure to insert test bar from the harness side of the check connector.

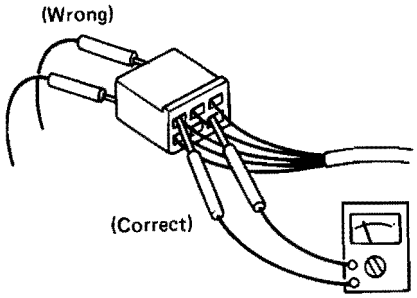

Fig. 5-49 A10-202

b. A circuit tester is used to measure resistance of duty solenoid valves after disconnecting their connectors.

- Hitachi carburetor

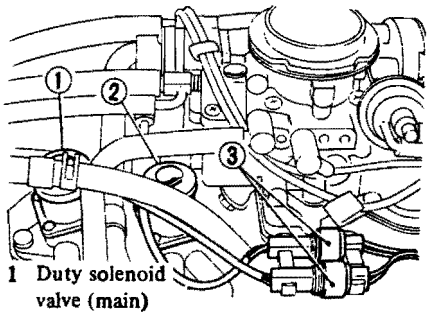

1 Duty solenoid valve (main)
2 Duty solenoid valve (slow)
3 Connectors

A10-141

Fig. 5-50 Duty solenoid valves and connectors

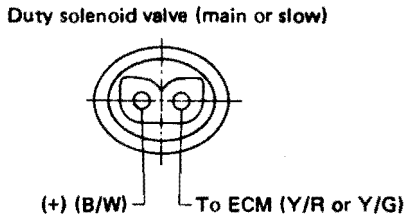

A10-125

Fig. 5-51 Connector terminal of duty solenoid valves

- C-W carburetor

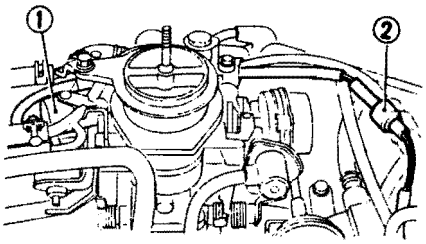

1 Feedback solenoid valve
2 Connector

A10-142

Fig. 5-52 Duty solenoid valve and connector

NOTE:
a. Connector terminal for the C-W solenoid valve is the same as that for Hitachi's.
b. Be sure to insert test bars from the harness side of the connector.

c. A circuit tester is used to measure resistance of vacuum switches after disconnecting their connectors.

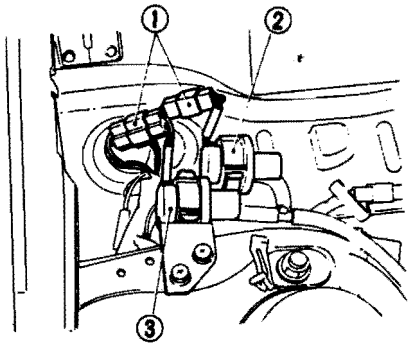

1 Connectors
2 Vacuum switch (II)
3 Vacuum switch (I)

A10-094

Fig. 5-53 Vacuum switches and connectors

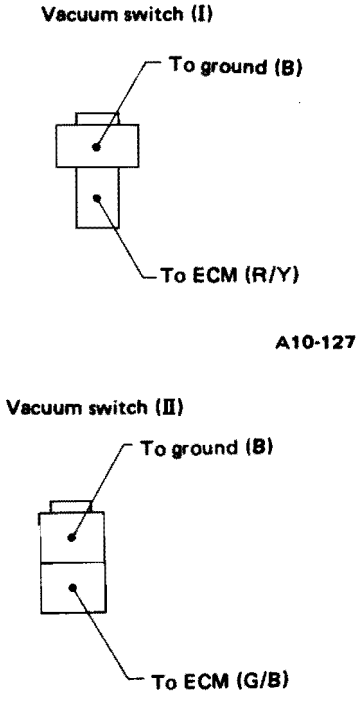

Fig. 5-54 Connector terminals of vacuum switches

Downloaded from www.Manualslib.com manuals search engine

NOTE:
Be sure to insert test bars from the harness side of the connector.

2) A stethoscope or a vinyl tube
A stethoscope or a vinyl tube is used to check if there is operating sound from duty solenoid valves.

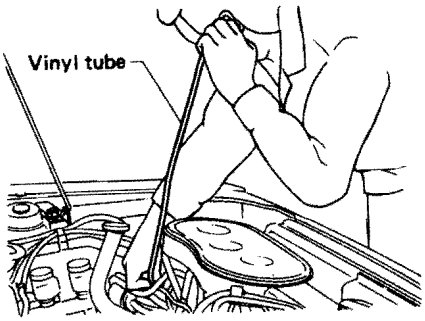

A10-129

Fig. 5-55

3) A dry cell
A dry cell, connecting plus (+) terminal of it to O_2 sensor wiring and minus (-) one to earth instead of O_2 sensor, is used to check O_2 sensor and its wiring for defect.

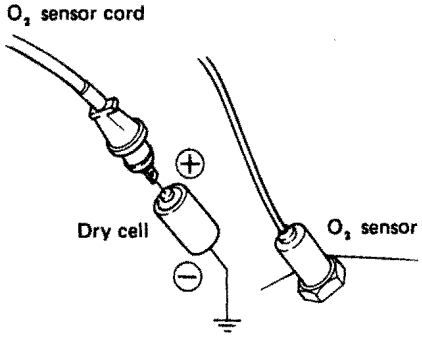

A10-203

Fig. 5-56

NOTE:
When replacing oxygen (O_2) sensor, remove or tighten it by using a special tool (Socket; 499990100).

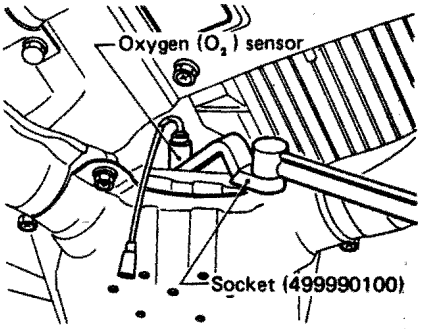

A5-680

Fig. 5-57 Replacing O_2 sensor

- NOTE FOR TROUBLESHOOTING CHART:

1. Check the connector while it is connected unless specified otherwise.
2. Be sure to check again from the beginning in order to prevent secondary trouble caused by repair work.
3. When checking with the vacuum hose disconnected from the vacuum switch at E/G on, be sure to plug the hose.

Downloaded from www.Manualslib.com manuals search engine

3) Troubleshooting Chart

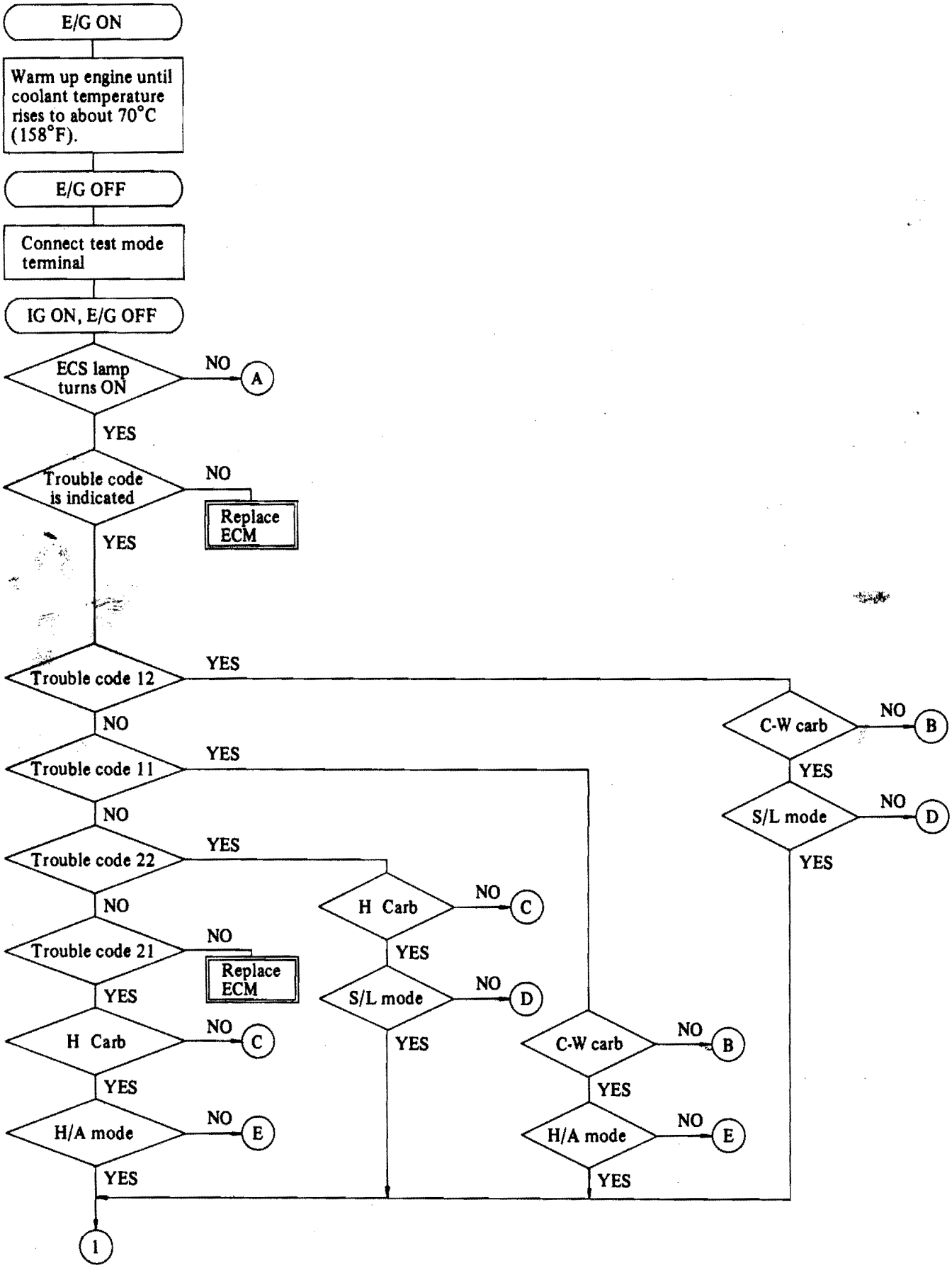

Downloaded from www.Manualslib.com manuals search engine

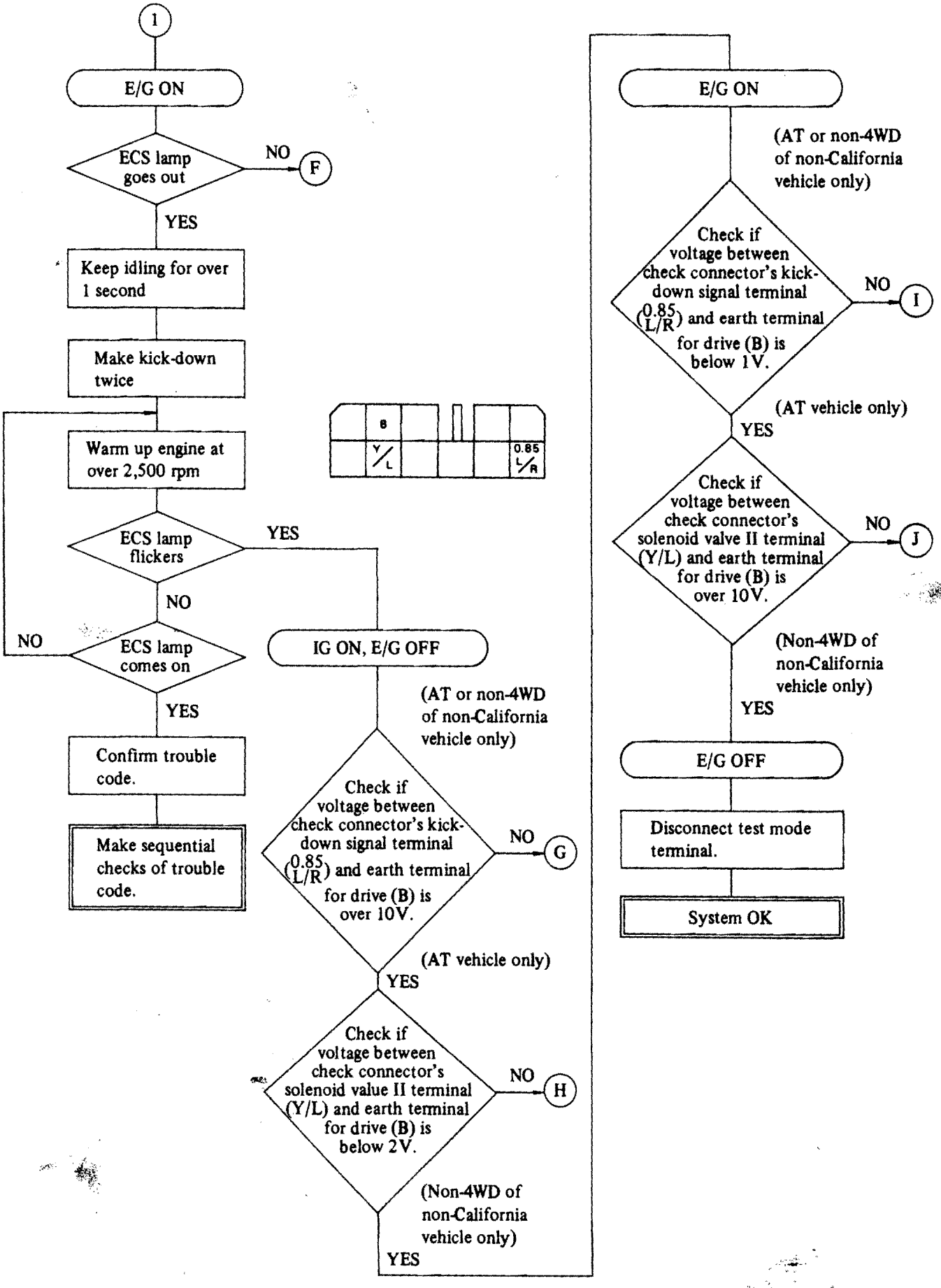

Downloaded from www.Manualslib.com manuals search engine

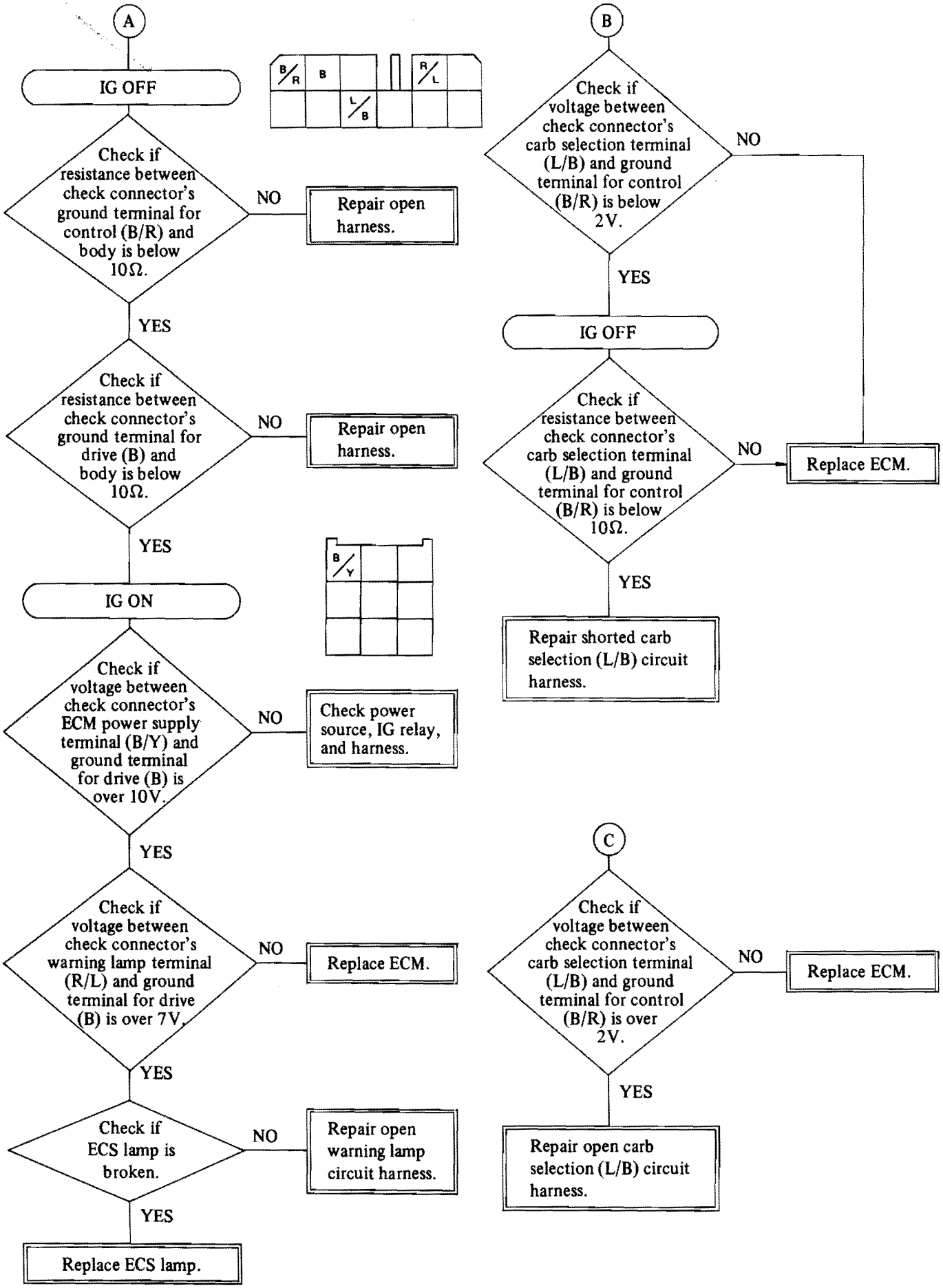

Downloaded from www.Manualslib.com manuals search engine

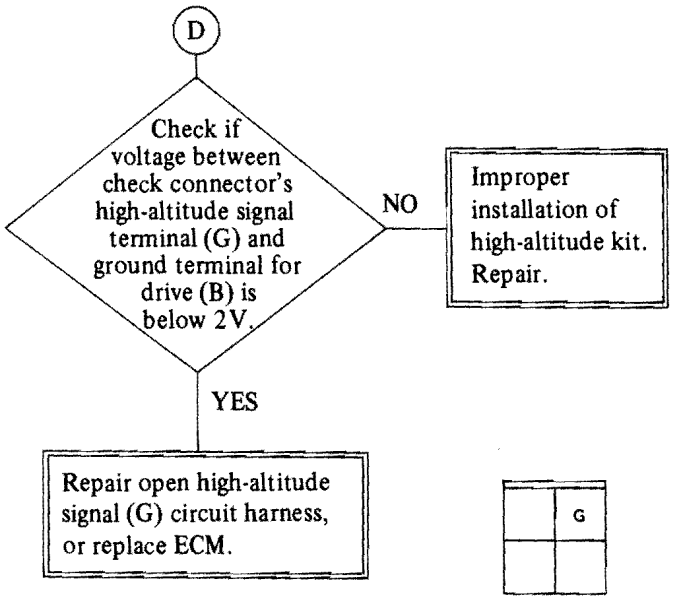

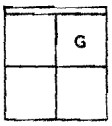

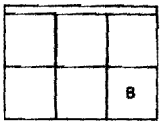

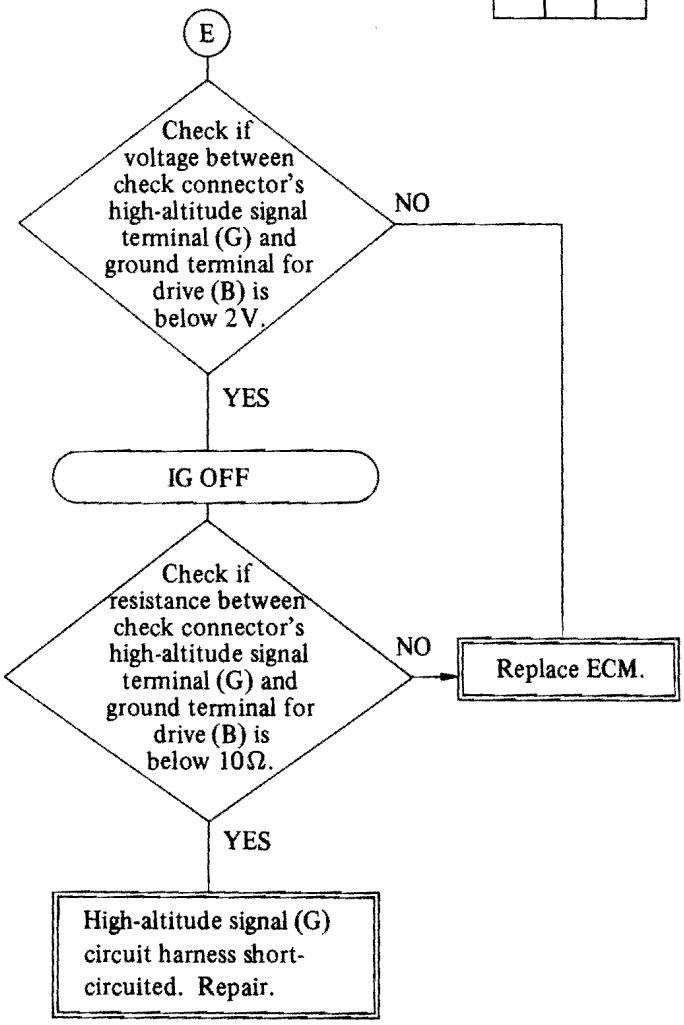

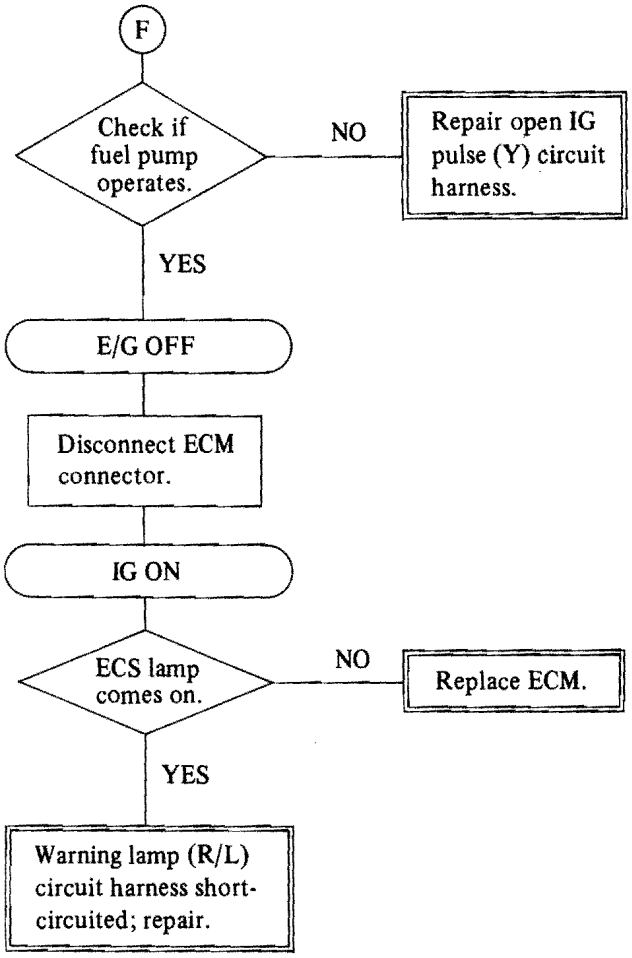

Downloaded from www.Manualslib.com manuals search engine

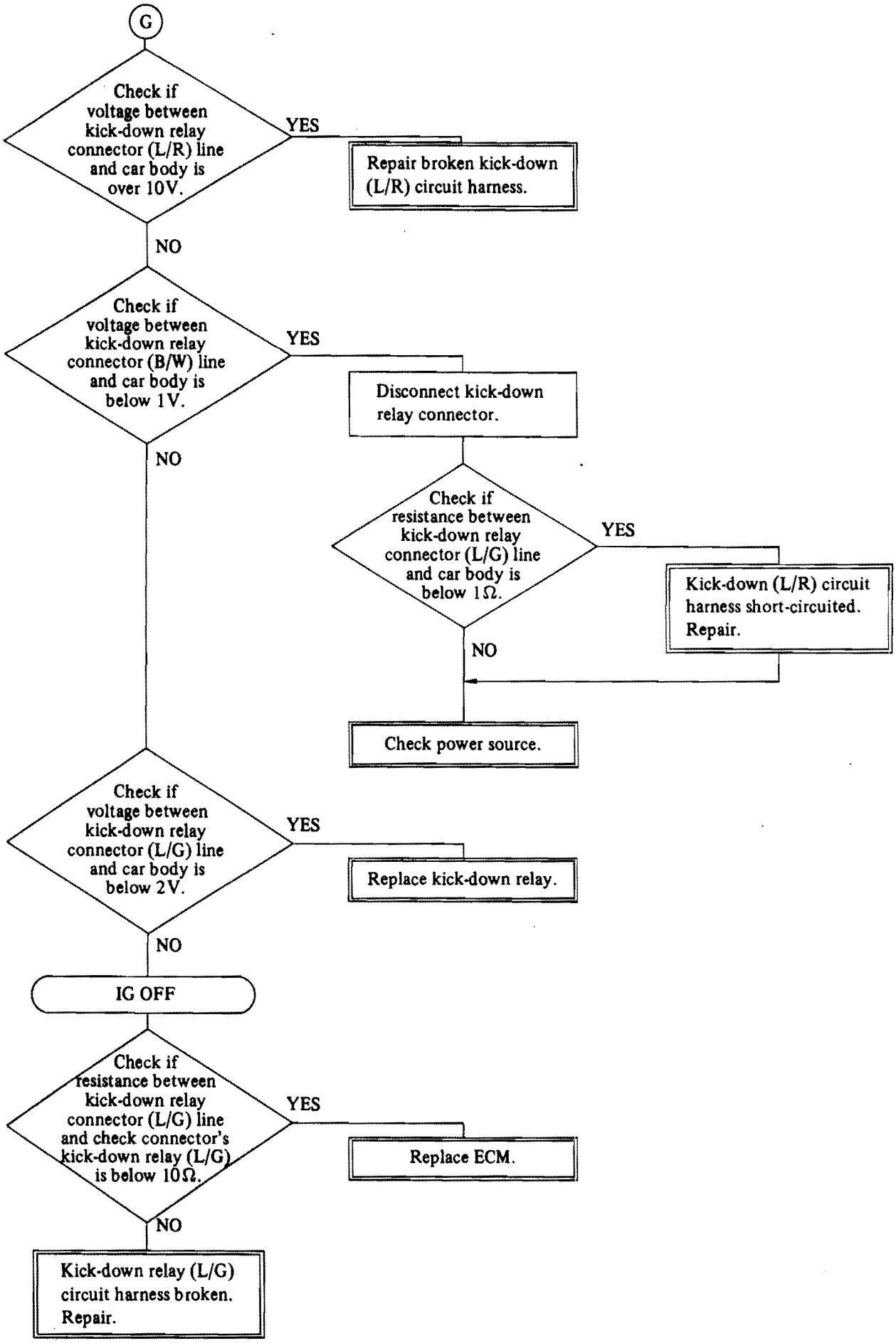

Downloaded from www.Manualslib.com manuals search engine

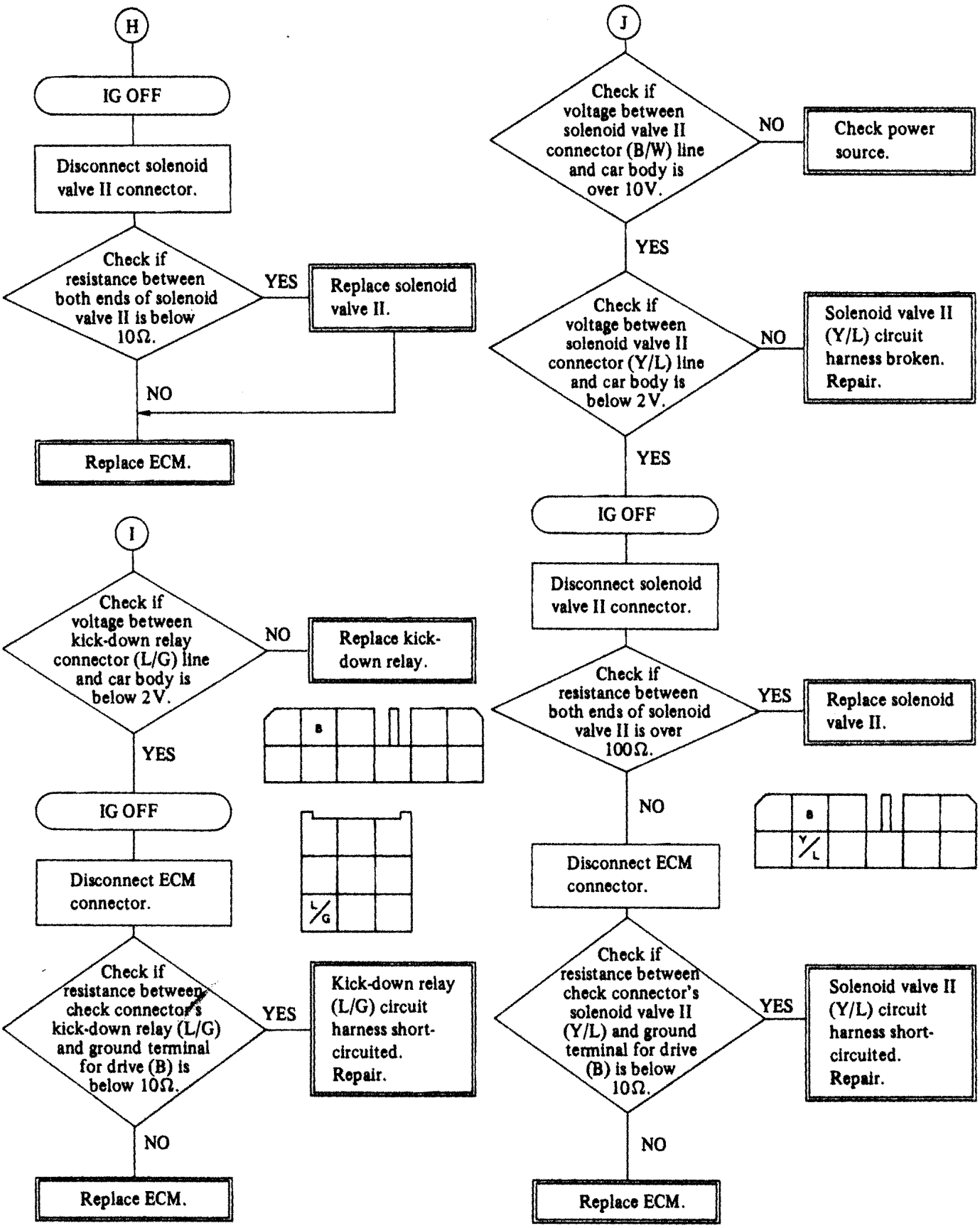

Downloaded from www.Manualslib.com manuals search engine

Trouble code 23

E/G OFF

IG ON

Disconnect cord from O_2 sensor.

Connect dry cell ⊕ pole to O_2 sensor cord and ⊖ pole to car body.

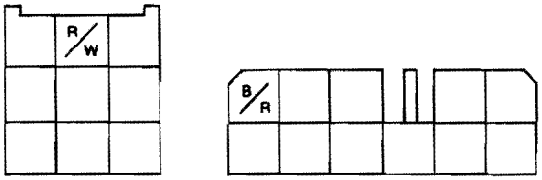

Check if voltage between check connector's O_2 monitor (R/W) and ground terminal for control (B/R) is over 2V.

YES → O_2 sensor defective. Replace.

NO

Check if voltage between check connector's O_2 monitor (R/W) and ground terminal for control (B/R) is below 1V.

NO → Repair open O_2 sensor cord.

YES

Remove dry cell.

E/G OFF

Check if resistance between O_2 sensor cord and car body is below 10Ω.

YES → O_2 sensor cord short-circuited. Repair.

NO

Replace ECM.

Downloaded from www.Manualslib.com manuals search engine

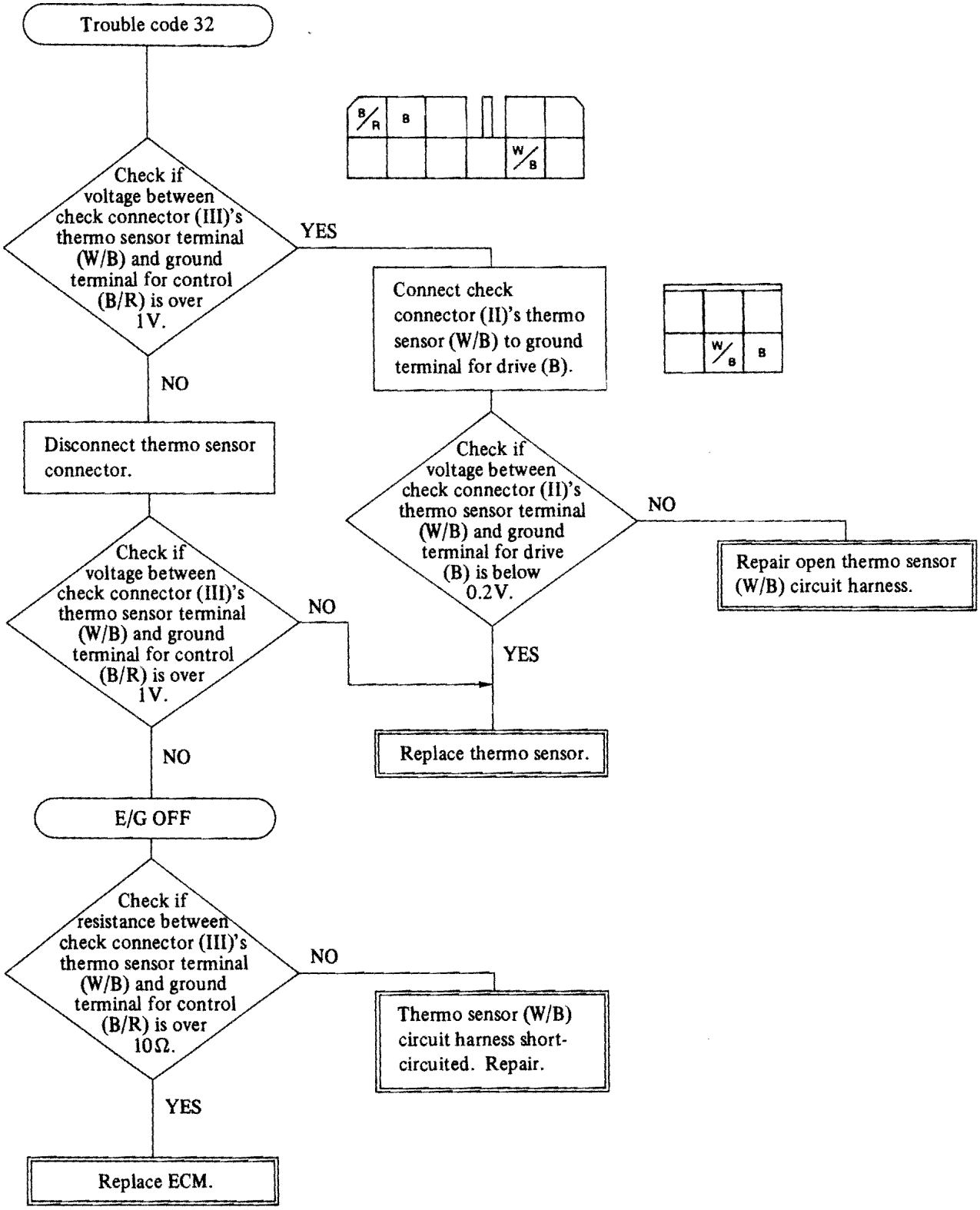

Downloaded from www.Manualslib.com manuals search engine

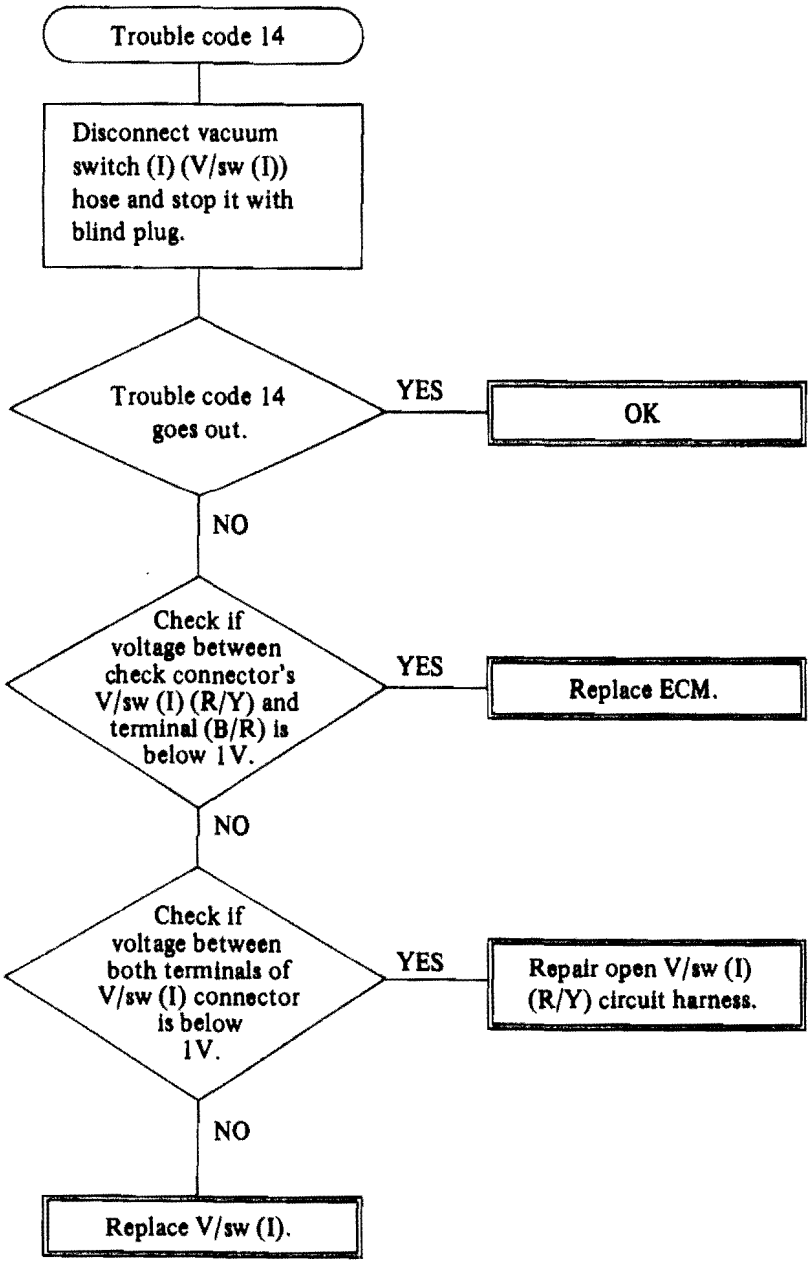

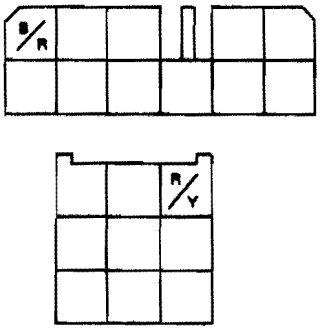

Downloaded from www.Manualslib.com manuals search engine

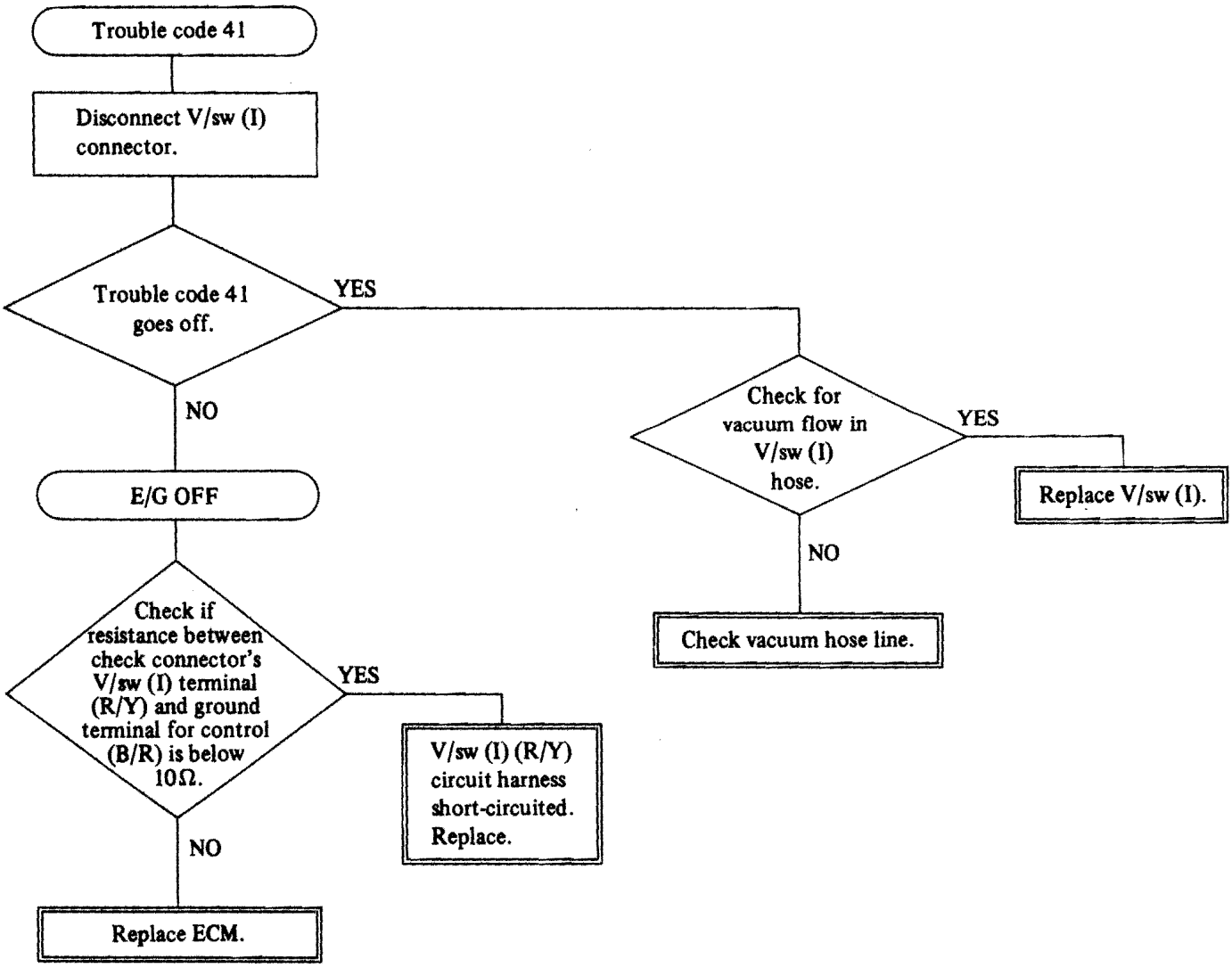

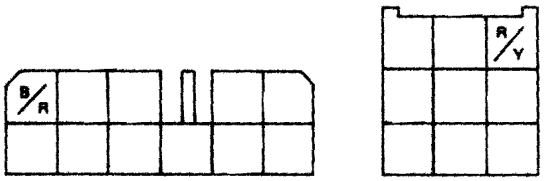

Downloaded from www.Manualslib.com manuals search engine

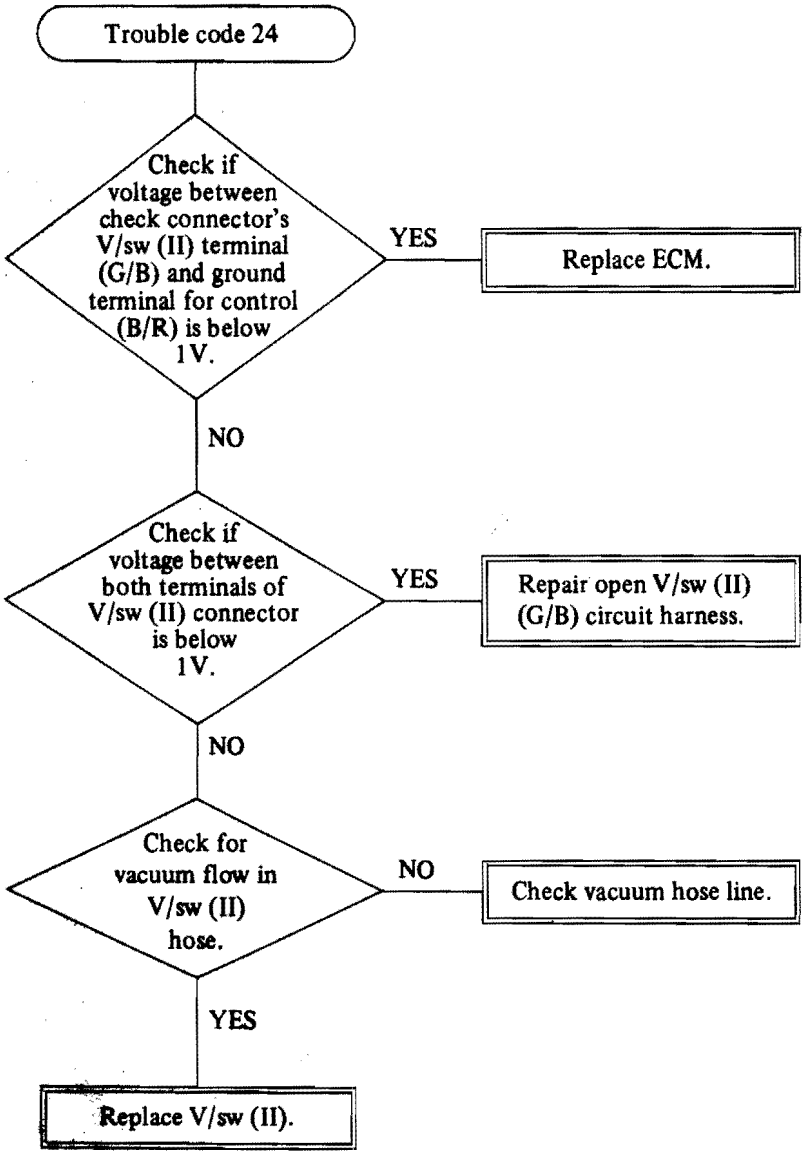

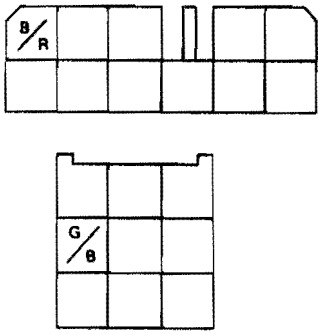

Downloaded from www.Manualslib.com manuals search engine

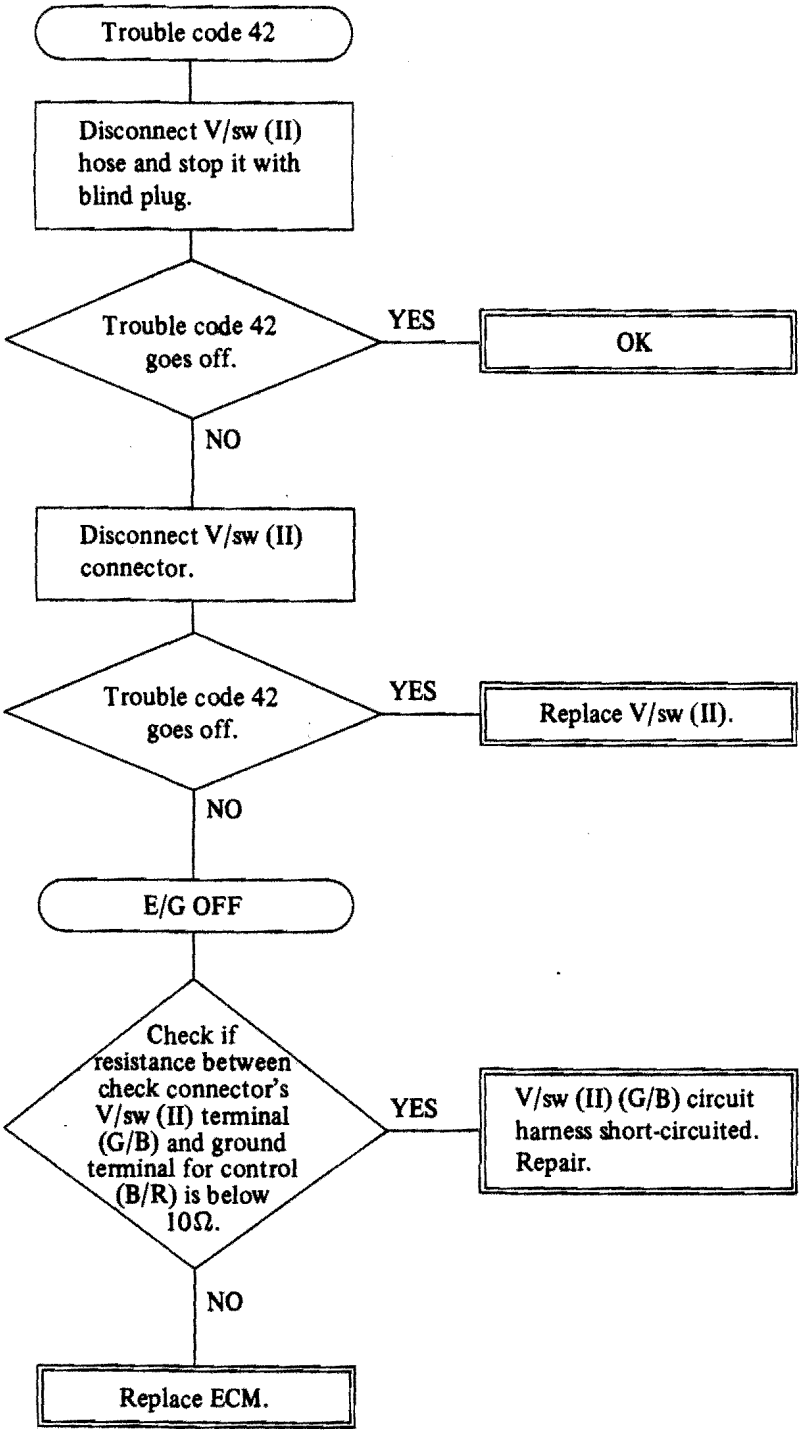

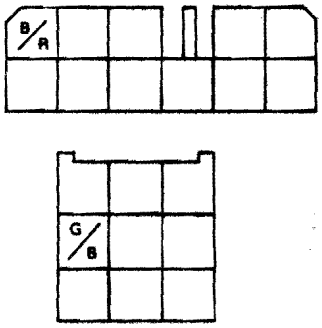

Downloaded from www.Manualslib.com manuals search engine

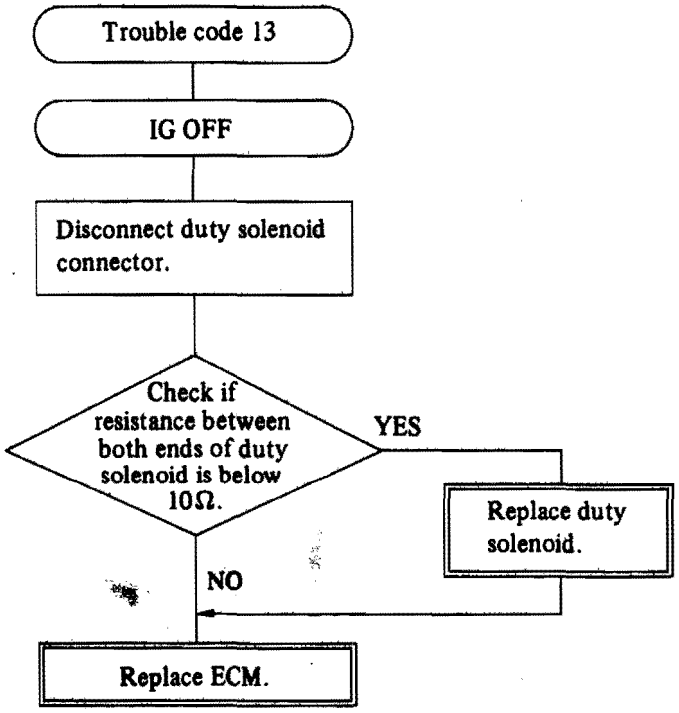

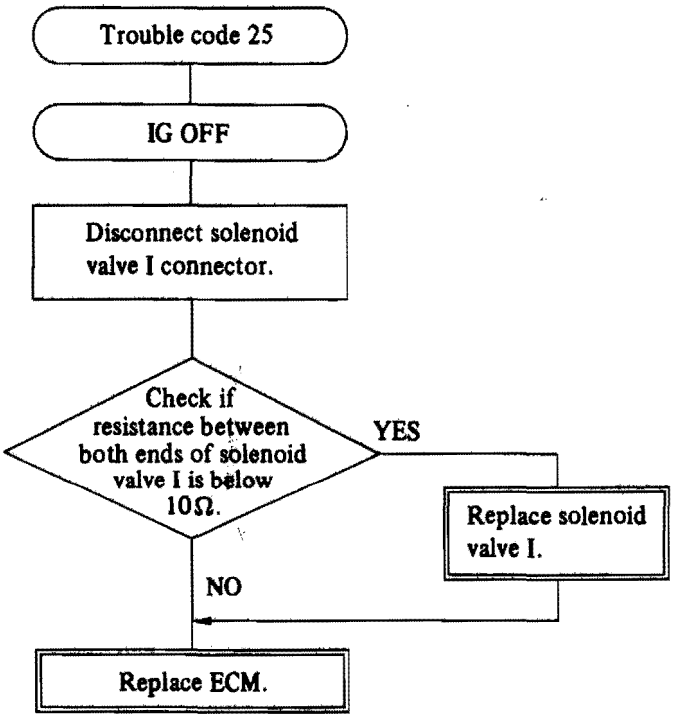

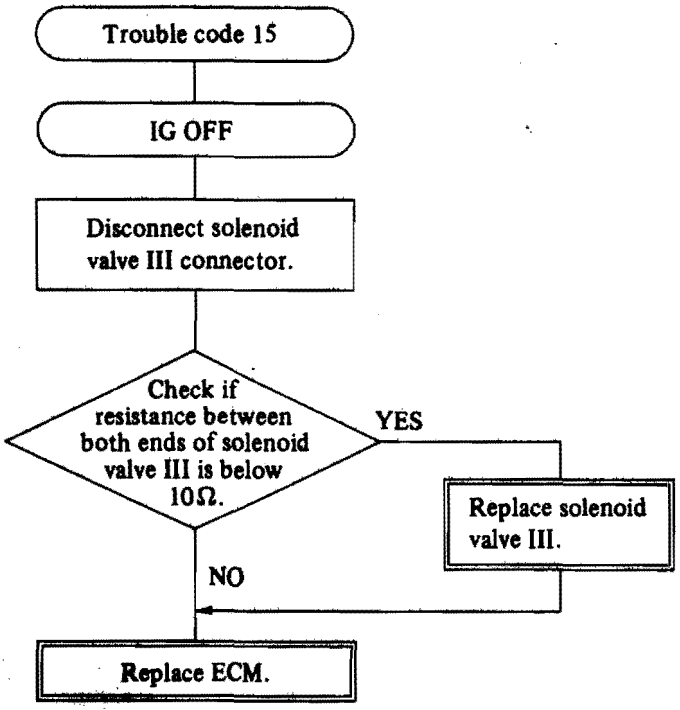

Downloaded from www.Manualslib.com manuals search engine

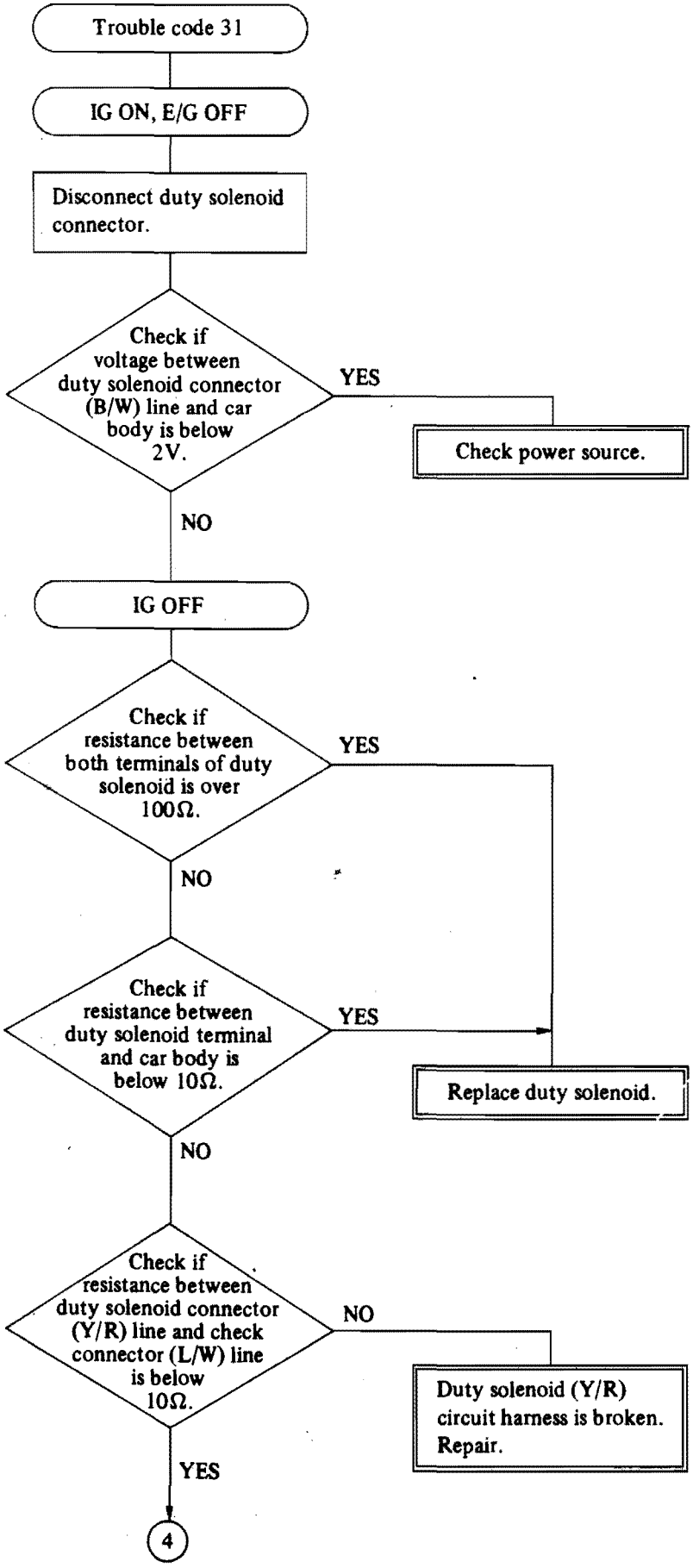

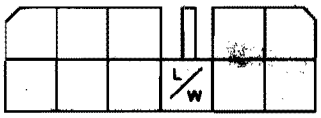

Downloaded from www.Manualslib.com manuals search engine

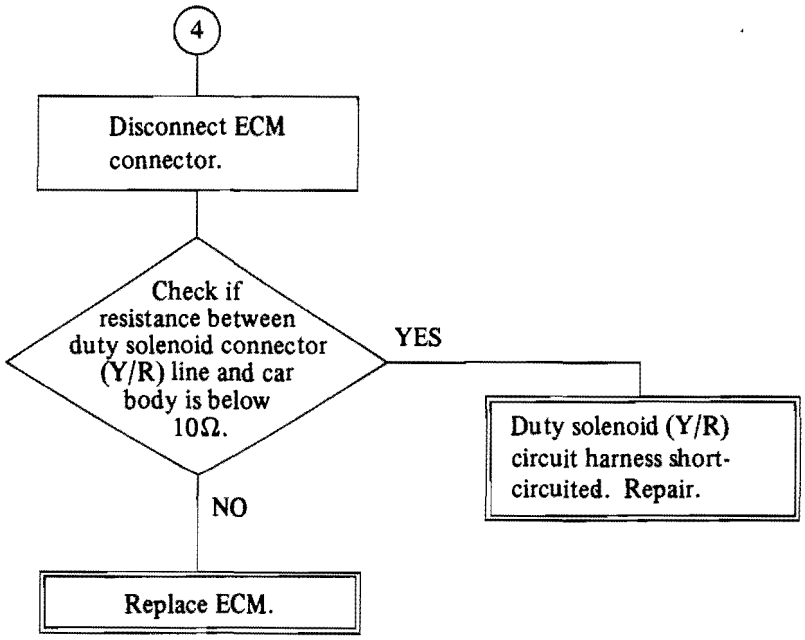

Downloaded from www.Manualslib.com manuals search engine

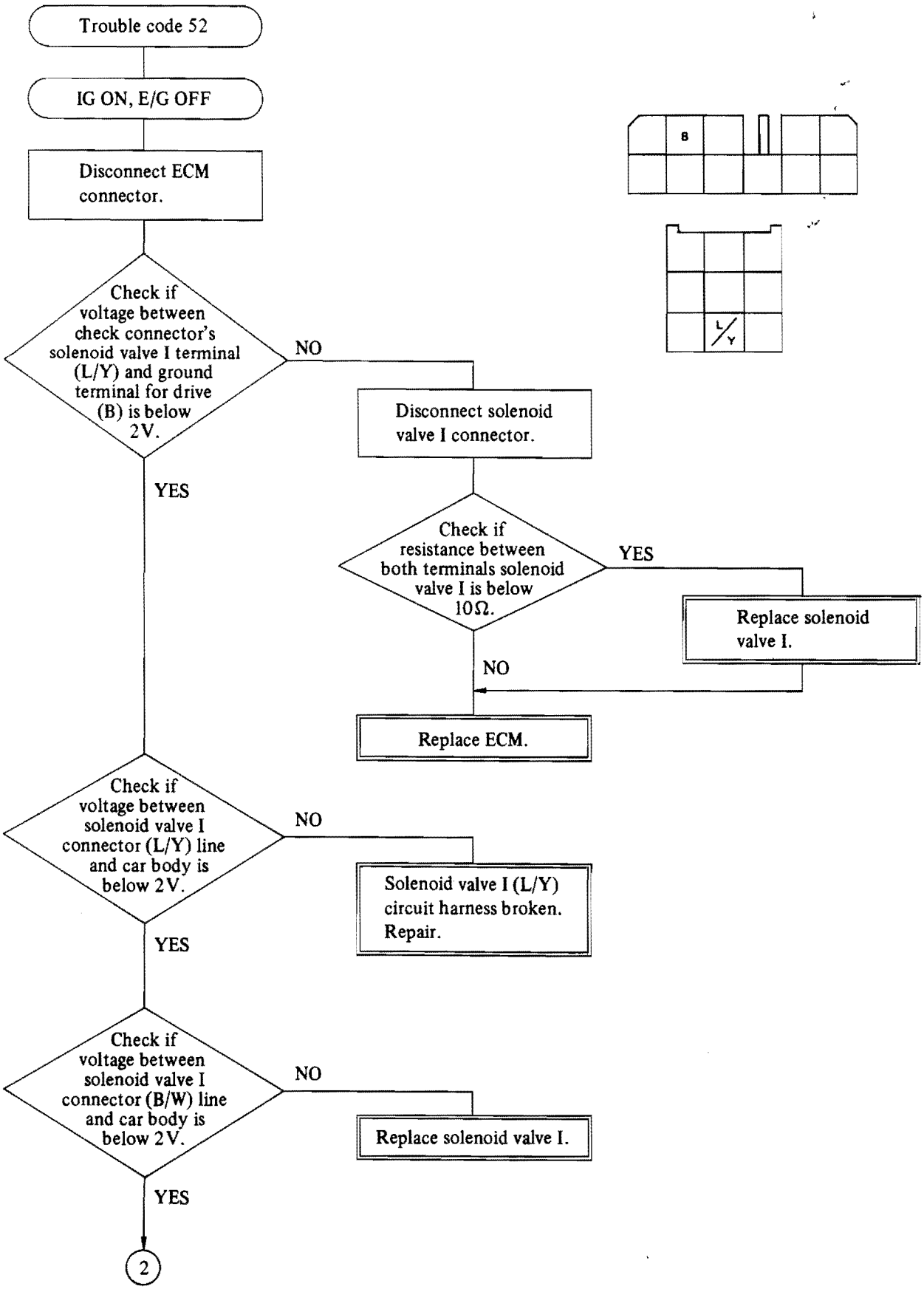

Downloaded from www.Manualslib.com manuals search engine

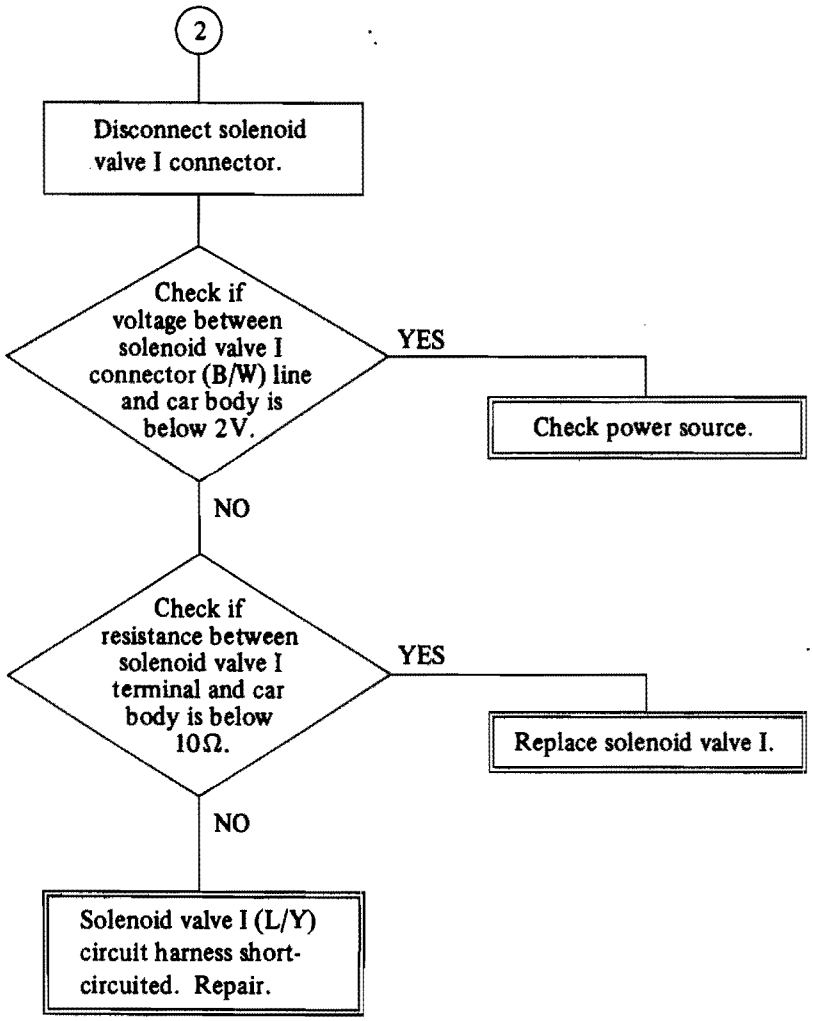

Downloaded from www.Manualslib.com manuals search engine

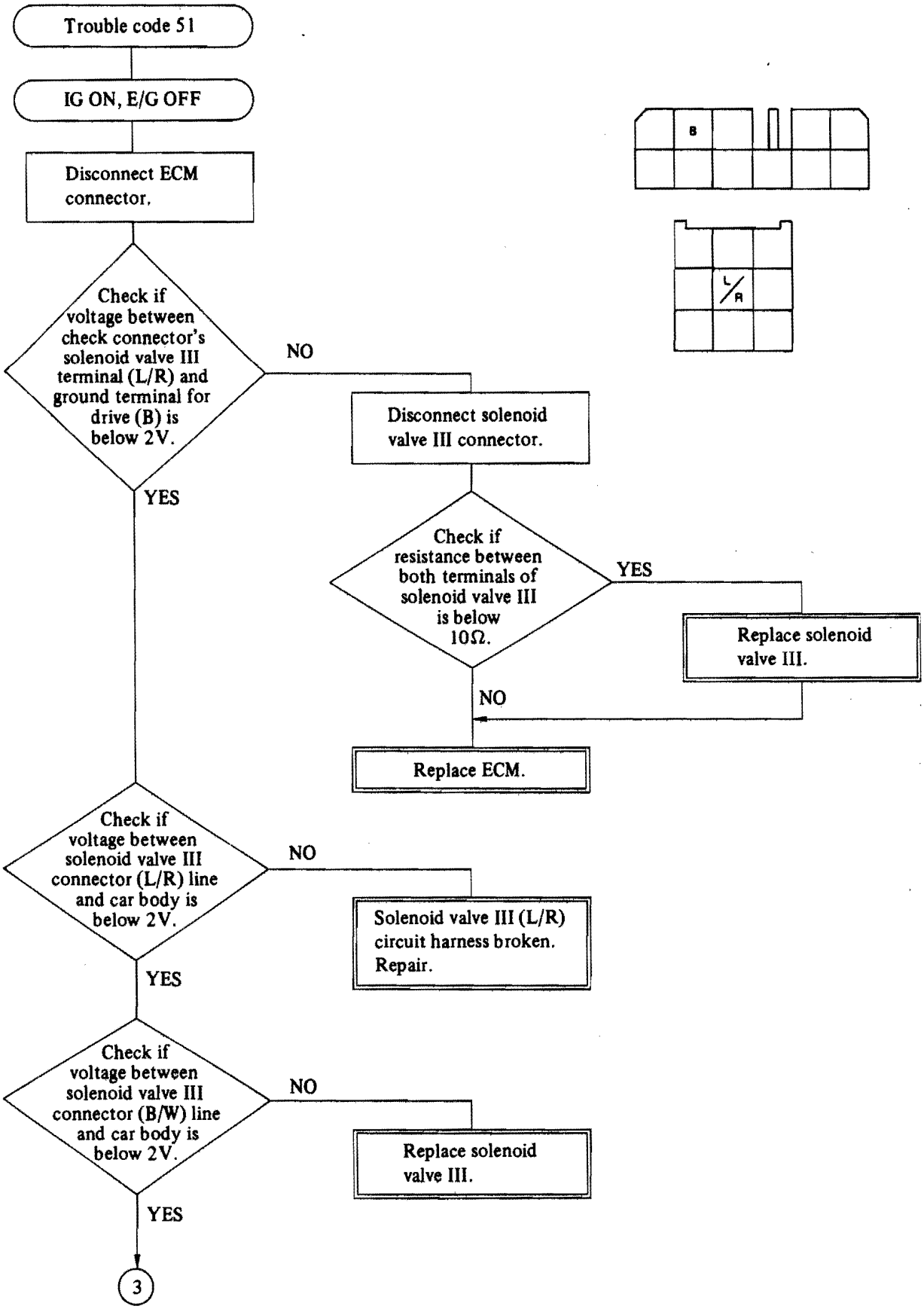

Downloaded from www.Manualslib.com manuals search engine

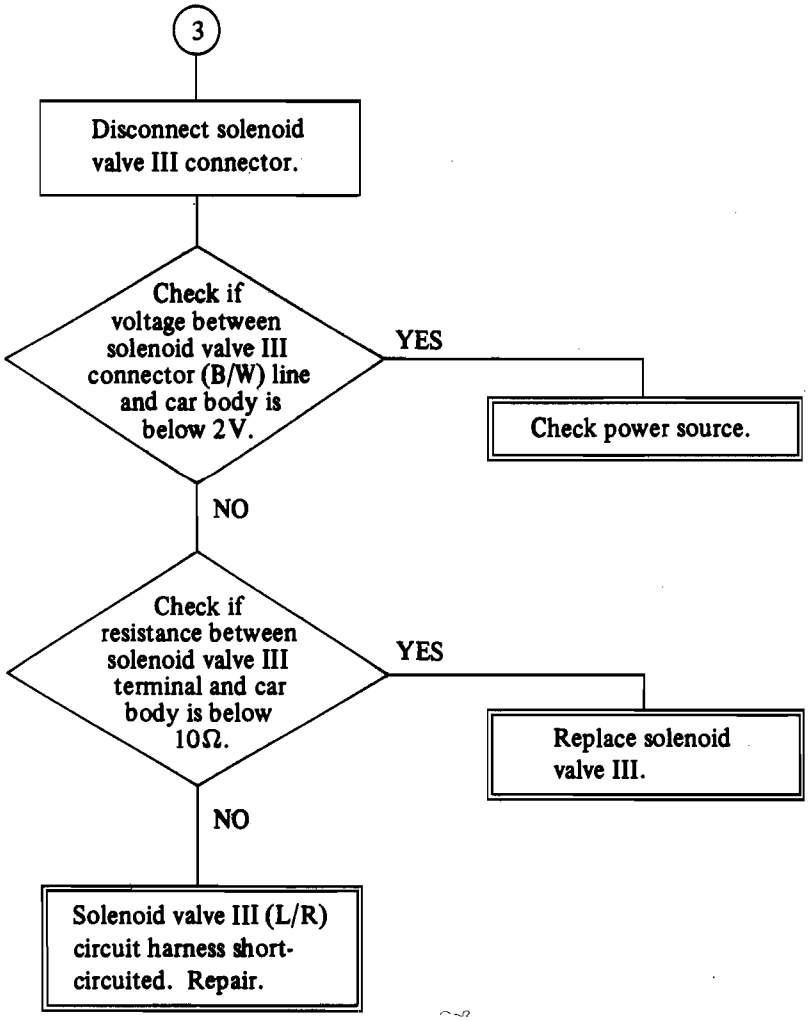

Downloaded from www.Manualslib.com manuals search engine

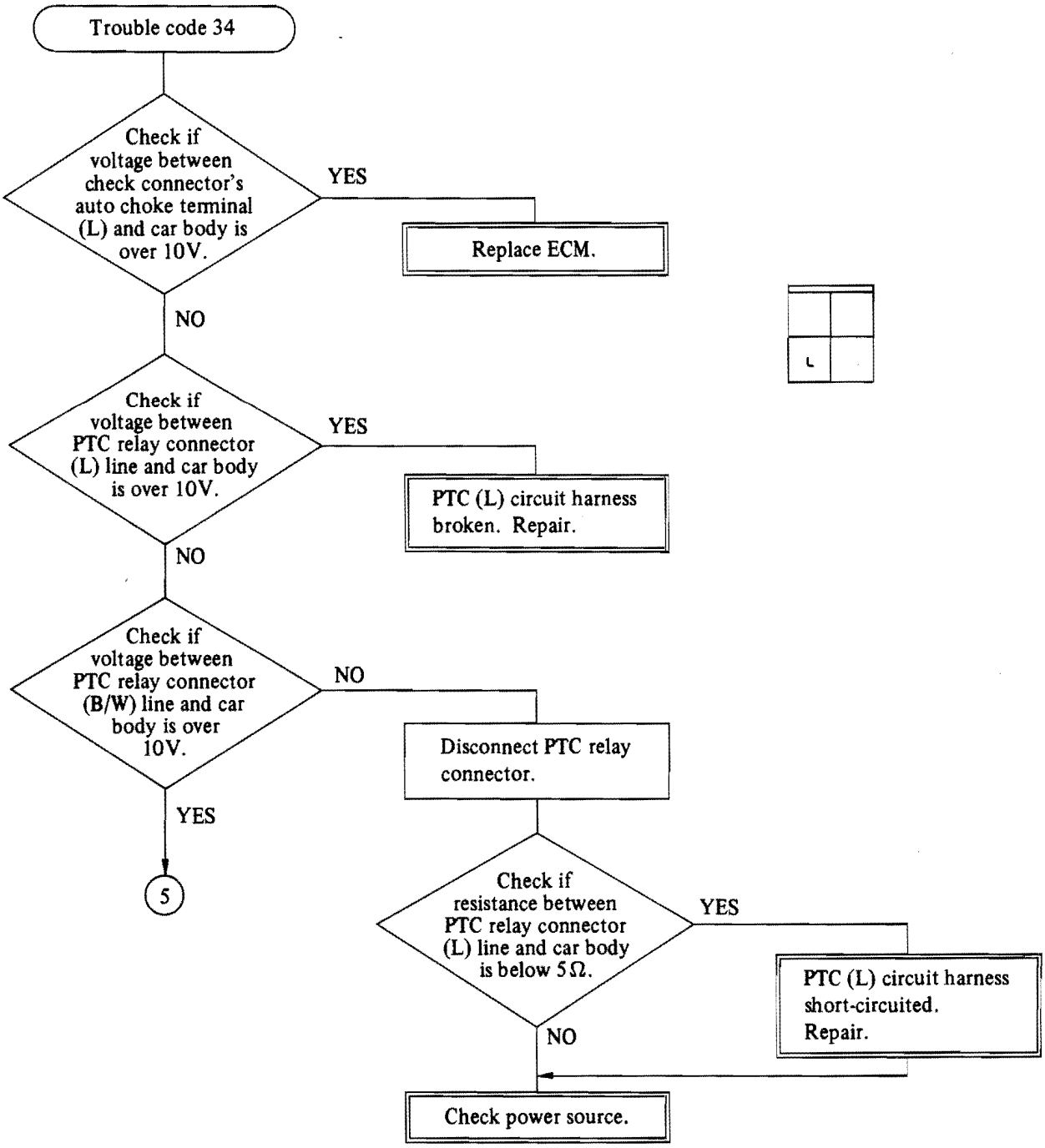

Downloaded from www.Manualslib.com manuals search engine

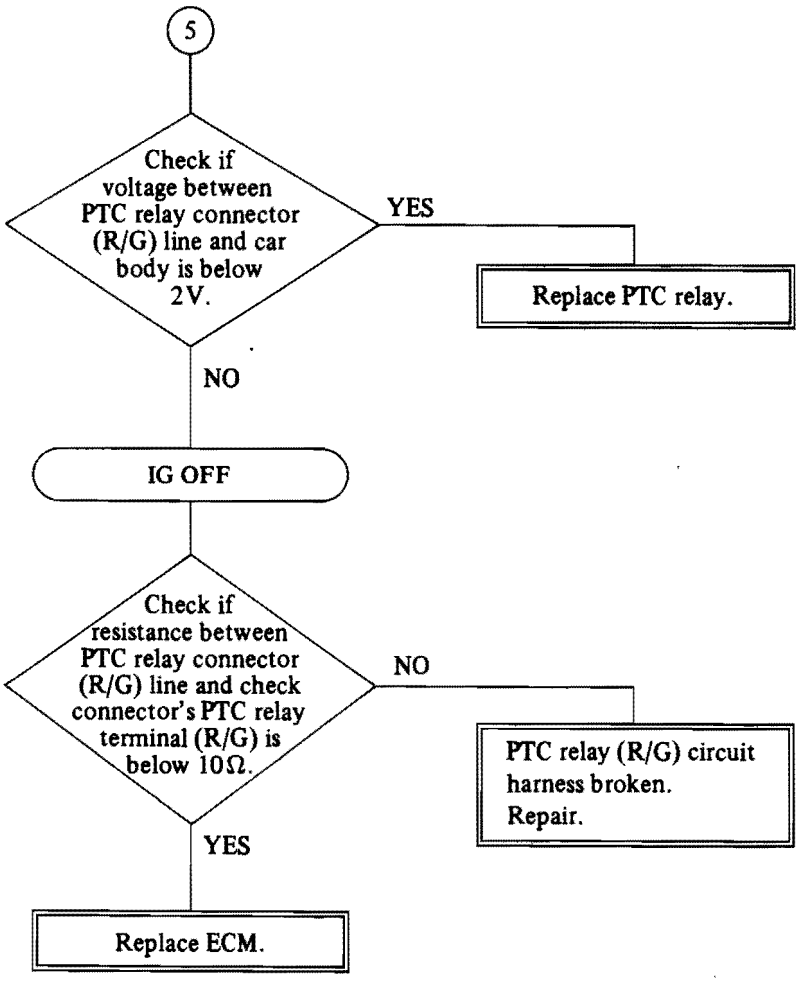

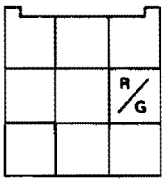

Downloaded from www.Manualslib.com manuals search engine

Trouble code 43

IG ON, E/G OFF

Check if voltage between check connector's auto choke terminal (L) and ground terminal for drive (B) is below 1V.

YES → Replace ECM.

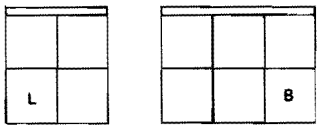

NO

Check if voltage between check connector's PTC relay terminal (R/G) and ground terminal for drive (B) is below 2V.

NO → Replace PTC relay.

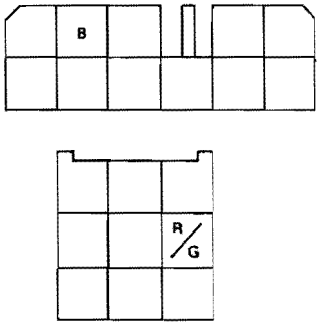

NO

IG OFF

Disconnect ECM connector.

Check if resistance between check connector's PTC relay terminal (R/G) and ground terminal for drive (B) is below 10Ω.

YES → PTC relay (R/G) circuit harness short-circuited. Repair.

NO

Replace ECM.

Trouble code 33

Main duty system malfunctioned. Repair.

Downloaded from www.Manualslib.com manuals search engine

5-4. Evaporative Emission Control System

1. Schematic Drawing

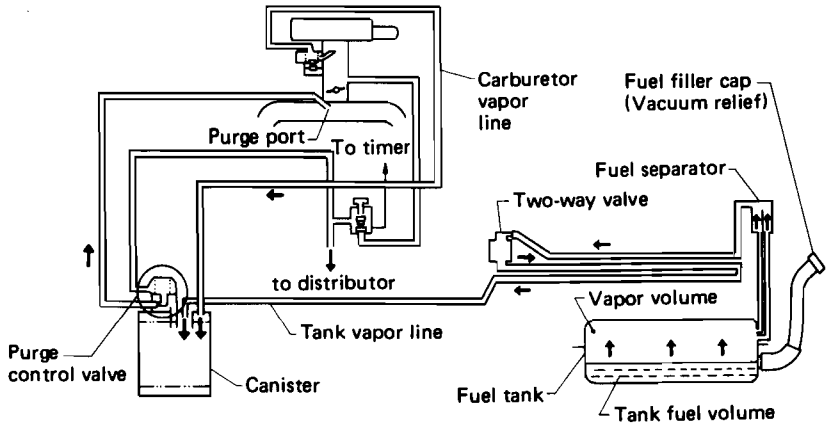

Fig. 5-58

2. Description

The evaporative emission control system is employed to prevent evaporative fuel from being discharged into ambient atmosphere. This system includes a canister, a two-way valve, a fuel separator, their connecting lines etc.

Gasoline vapor evaporated from the fuel in the fuel tank is introduced into the canister located in the engine compartment through the tank fuel line, and is absorbed on activated carbon in it. A two-way valve and a vapor separator are also incorporated on the tank vapor line.

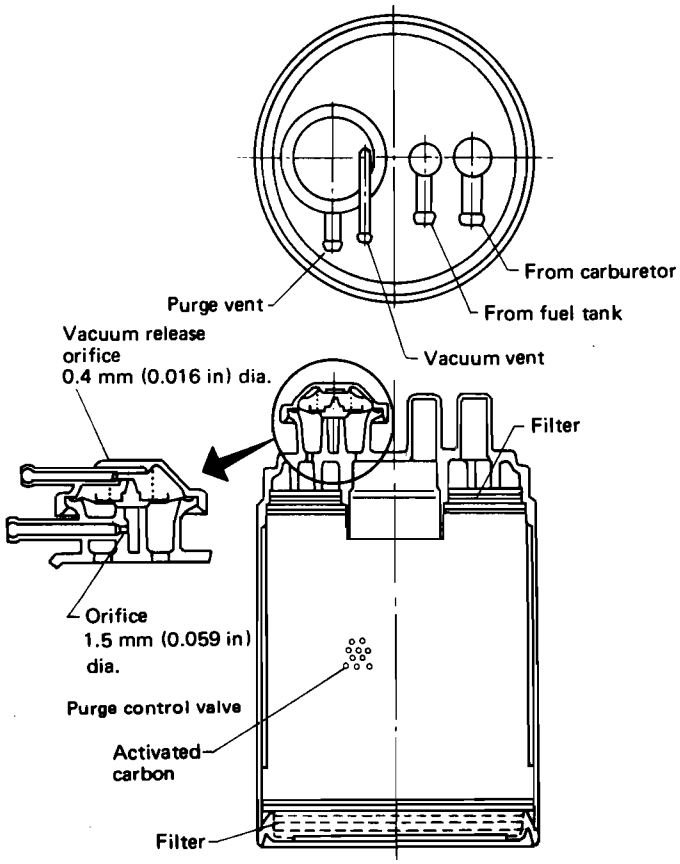

Fig. 5-59

The carburetor vapor line, connecting between the carburetor float chamber and the canister, is employed in addition to the tank vapor line. Gasoline vapor evaporated from the float chamber is inducted into the canister through solenoid valve (II) at all positions except "ON" and "START" positions of ignition-starter switch.

1) Canister

The purge control valve on the canister is controlled by carburetor vacuum. When the purge control valve is opened, the adsorbed vapor is introduced from the canister into the intake manifold.

When the engine is not running, the purge control valve is closed by the return spring.

Gasoline vapor does not purge to intake manifold within the specified temperature [15 to 35°C (59 to 95°F)] because the carburetor vacuum is leaked.

2) Two-way valve

The two-way valve is located in the fuel vapor line and functions to control the pressure in the fuel tank.

When the fuel tank pressure is positive above a certain point, the valve A is open to permit the fuel vapor to the canister, and when the fuel tank pressure is negative below a certain point, the valve B is open to introduce fresh air into the fuel tank.

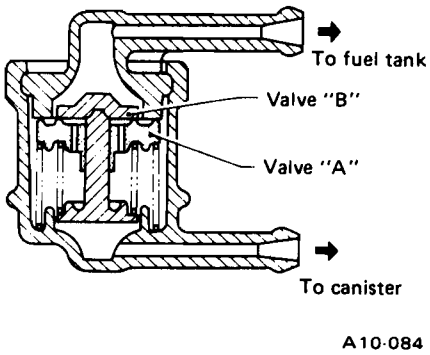

Fig. 5-60 Two-way valve

3) Fuel separator

The vapor separator is to prevent liquid fuel from flowing into the canister in case of abrupt cornering, etc.

Downloaded from www.Manualslib.com manuals search engine

All models except Hatchback

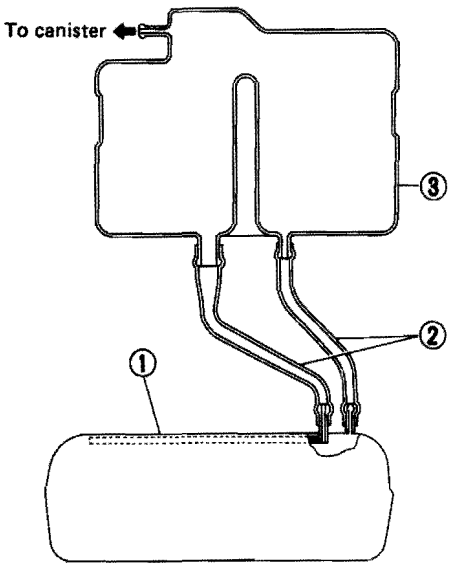

A10-078

Hatchback

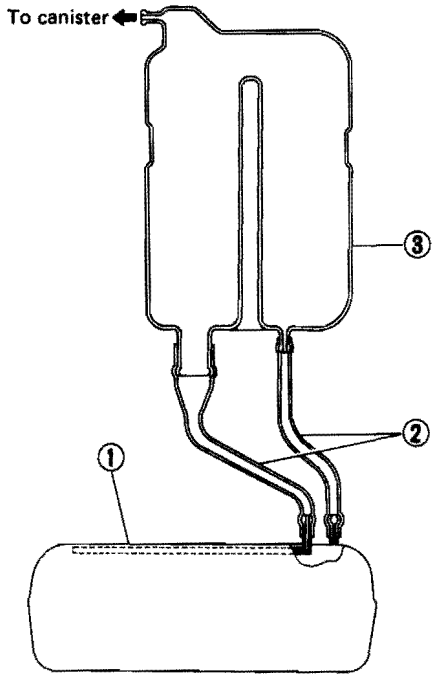

A10-079

1 Fuel tank
2 Breather hose
3 Vapor separator

Fig. 5-61

4) Fuel filler cap with vacuum relief valve

The relief valve is adopted to prevent the development of vacuum in the fuel tank which may occur in case of trouble in the fuel vapor line.

In normal condition, the filler pipe is sealed at Ⓐ and at the packing pressed against the filler pipe end. As vacuum develops in the fuel tank, atmospheric pressure forces the spring down to open the valve; consequently air is led into the fuel tank controlling the inside pressure.

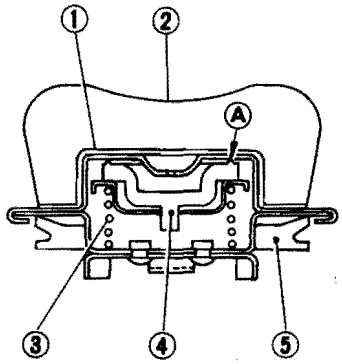

1 Seal
2 Filler cap
3 Spring
4 Valve
5 Packing

A10-205

Fig. 5-62

3. Inspection

Inspect evaporative emission control system in accordance with chapter 2, 2-2, 11.

5-5. Special Tool

499990100			
SOCKET			
Oxygen (O_2) sensor			
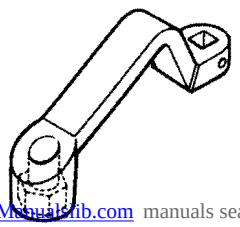			

Downloaded from www.Manualslib.com manuals search engine

Downloaded from www.Manualslib.com manuals search engine

CHAPTER 6

MANUAL TRANSMISSION AND DIFFERENTIAL

		Page
6–1.	SPECIFICATIONS AND SERVICE DATA	6– 2
	1. Specifications	6– 2
	2. Service Data	6– 3
6–2.	CLUTCH	6– 7
	1. Component Parts	6– 7
	2. On-car Service	6– 7
	3. Removal	6– 8
	4. Inspection	6– 9
	5. Installation	6–12
6–3.	MANUAL TRANSMISSION AND DIFFERENTIAL	6–13
	1. Cross Sectional View	6–13
	2. Component Parts	6–15
	3. On-car Service	6–24
	4. Dismounting	6–25
	5. Removal	6–26
	6. Disassembly	6–29
	7. Inspection	6–32
	8. Assembly	6–34
	9. Installation	6–42
	10. Remounting	6–59
6–4.	TRANSMISSION CONTROL SYSTEM	6–62
	1. Component Parts	6–62
	2. Removal and Disassembly	6–64
	3. Inspection	6–65
	4. Assembly	6–65
	5. Installation	6–67
6–5.	TROUBLESHOOTING	6–70
	1. Clutch	6–70
	2. Manual Transmission and Differential	6–73
6–6.	SPECIAL TOOLS	6–75
	1. Clutch	6–75
	2. Manual Transmission and Differential	6–76

SUBARU

Downloaded from www.Manualslib.com manuals search engine

6-1. Specifications and Service Data

1. Specifications

				1600		1800			
						5-speed			
				4-speed	5-speed	All models except Station Wagon	Station Wagon	4WD	4WD Dual-range
Clutch	Clutch disc	Type		Dry single plate					
		Facing	Dimension (Outer diameter × inner diameter × thickness)	200 × 130 × 3.5 mm (7.87 × 5.12 × 0.138 in)				225 × 150 × 3.5 mm (8.86 × 5.91 × 0.138 in)	
			Surface area	181 × 2 cm² (28.1 × 2 sq in)				220 × 2 cm² (34.1 × 2 sq in)	
			Material	Woven asbestos					
		Disc	Compression thickness	7.8 mm (0.307 in)					
			Free thickness	8.8 mm (0.346 in)		8.5 mm (0.335 in)			
		Hub spline		21.5 × 21 × 1.0					
	Clutch cover	Spring	Type	Diaphragm					
			Outer diameter	168 mm (6.61 in)					
			Plate thickness	1.96 mm (0.0772 in)		2.04 mm (0.0803 in)			
			Setting load	2,942 N (300 kg, 662 lb)		3,432 N (350 kg, 772 lb)			
		Driving type of pressure plate		Strap plate type					
	Clutch play	At the nut center located on the clutch fork end		2 – 3 mm (0.08 – 0.12 in)					
Transmission	Type			4-forward speeds with synchro-mesh and 1-reverse	5-forward speeds with synchro-mesh and 1-reverse	5-forward speeds with synchromesh and 1-reverse		4-forward speeds with synchro-mesh and 1-reverse	4-forward speeds with synchro-mesh and 1-reverse (dual-range)
	Transmission gear ratio (Tooth number of gear)		1st	3.666 (44/12)	3.666 (44/12)	3.307 (43/13)	3.307 (43/13)	3.636 (40/11)	
			2nd	2.157 (41/19)	2.157 (41/19)	1.950 (39/20)	1.950 (39/20)	1.950 (39/20)	
			3rd	1.266 (38/30)	1.266 (38/30)	1.266 (38/30)	1.266 (38/30)	1.193 (37/31)	
			4th	0.885 (31/35)	0.885 (31/35)	0.885 (31/35)	0.885 (31/35)	0.769 (30/39)	
			5th		0.725 (29/40)	0.725 (29/40)	0.725 (29/40)		
			Reverse	4.100 (19/10 × 41/19)	4.100 (19/10 × 41/19)	3.583 (23/12 × 43/23)	3.583 (23/12 × 43/23)	3.583 (23/12 × 43/23)	
	Auxiliary transmission gear ratio (Tooth number of gear)		High						1.000
			Low						1.462 (22/19 × 24/19)
	Front reduction gear	Final	Type of gear	Hypoid					
			Gear ratio (Tooth number of gear)	3.700 (37/10)				3.889 (35/9)	
	Rear reduction gear	Transfer	Type of gear					Helical	
			Gear ratio (Tooth number of gear)					1.000 (34/34)	
		Final	Type of gear					Hypoid	
			Gear ratio (Tooth number of gear)					3.900 (39/10)	
	Front differential	Type and number of gears		Straight bevel gear (Pinion: 2, Side gear: 2)					
		Tooth number	Side gear	18		14			
			Pinion gear	13		10			
	Rear differential	Type and number of gears						Straight bevel gear (Pinion: 2, Side gear: 2)	
		Tooth number	Side gear					16	
			Pinion gear					10	
	Transmission oil capacity			2.7ℓ (2.9 US qt, 2.4 Imp qt)				3.0ℓ (3.2 US qt, 2.6 Imp qt)	
	Rear differential gear oil capacity			—				0.8ℓ (0.8 US qt, 0.7 Imp qt)	

Downloaded from www.Manualslib.com manuals search engine

2. Service Data

Clutch	Clutch pedal full stroke		129 – 137 mm	(5.08 – 5.39 in)
	Pad surface position of clutch pedal		Above brake pedal level by 15 mm (0.59 in)	
	Release fork stroke		17 – 18 mm	(0.67 – 0.71 in)
	Play at release fork center		2.0 – 3.0 mm	(0.079 – 0.118 in)
	Depth of rivet head	STD	1.4 mm	(0.055 in)
		Sinking limit	0.3 mm	(0.012 in)
Manual transmission	Aluminum gasket thickness (Neutral position adjustment)			
	Part No.	Remarks		
	803922021	Neutral position approahces reverse gear side	0.5 mm	(0.020 in)
	037022000	Standard	1.0 mm	(0.039 in)
	803922022	Neutral position approaches 1st/2nd gear side	1.5 mm	(0.059 in)
	803922023	Neutral position approaches 1st/2nd gear side	2.0 mm	(0.079 in)
	Dimension 'C' of reverse accent shaft			
	for 1600	Part No. / Mark / Contact clearance		
	442747001	1 becomes smaller	16.2 – 16.4 mm	(0.638 – 0.646 in)
	442747002	2 ↑	16.6 – 16.8 mm	(0.654 – 0.661 in)
	442747003	–	17.0 – 17.2 mm	(0.669 – 0.677 in)
	442747004	4	17.4 – 17.6 mm	(0.685 – 0.693 in)
	442747005	5 ↓	17.8 – 18.0 mm	(0.701 – 0.709 in)
	442747006	6 becomes larger	18.2 – 18.4 mm	(0.717 – 0.724 in)
	for 1800	Part No. / Mark		
	442747101	1 becomes smaller	12.2 – 12.4 mm	(0.480 – 0.488 in)
	442747102	2 ↑	12.6 – 12.8 mm	(0.496 – 0.504 in)
	442747103	–	13.0 – 13.2 mm	(0.512 – 0.520 in)
	442747104	4	13.4 – 13.6 mm	(0.528 – 0.535 in)
	442747105	5 ↓	13.8 – 14.0 mm	(0.543 – 0.551 in)
	442747106	6 becomes larger	14.2 – 14.4 mm	(0.559 – 0.567 in)
	Transmission main shaft snap ring (out-22) thickness			
		Part No.		
		805022010	2.45 mm	(0.0965 in)
		805022011	2.48 mm	(0.0976 in)
		805022012	2.51 mm	(0.0988 in)
		805022013	2.54 mm	(0.1000 in)
		805022014	2.57 mm	(0.1012 in)
		805022015	2.60 mm	(0.1024 in)
		805022016	2.63 mm	(0.1035 in)
		805022017	2.66 mm	(0.1047 in)
		805022018	2.69 mm	(0.1059 in)
		805022019	2.85 mm	(0.1122 in)
		805022030	2.42 mm	(0.0953 in)
		805022031	2.39 mm	(0.0941 in)

Downloaded from www.Manualslib.com manuals search engine

Manual transmission (continued)

Washer thickness (Washer to case wall clearance adjustment)					
		Part No.			
		803015081		0.6 – 0.8 mm	(0.024 – 0.031 in)
		803015082		1.0 – 1.2 mm	(0.039 – 0.047 in)
		803015083		1.4 – 1.6 mm	(0.055 – 0.063 in)
		803015084		1.8 – 2.0 mm	(0.071 – 0.079 in)
		803015085		2.2 – 2.4 mm	(0.087 – 0.094 in)
Main shaft rear plate thickness					
for 1600	Dimension 'A'	Part No.	Stamp		
	3.50 – 3.63 mm (0.1378 – 0.1429 in)	441342112	T71-2	5.0 mm	(0.197 in)
	3.37 – 3.50 mm (0.1327 – 0.1378 in)	441342113	T71-3	5.13 mm	(0.2020 in)
for 1800	Dimension 'A'	Part No.	Stamp		
	4.50 – 4.63 mm (0.1772 – 0.1823 in)	441347001	T81-1	5.0 mm	(0.197 in)
	4.37 – 4.50 mm (0.1720 – 0.1772 in)	441347002	T81-2	5.13 mm	(0.2020 in)
Synchronizer ring face to gear facing gap			STD	1.5 mm	(0.059 in)
				1.0 mm	(0.039 in) ... High-low synchroring of 4WD Dual-range
			Limit	0.5 mm	(0.020 in)
Drive pinion shim thickness					
for 1600		Part No.			
		841968601		0.140 – 0.160 mm	(0.0055 – 0.0063 in)
		841968602		0.190 – 0.210 mm	(0.0075 – 0.0083 in)
		841968603		0.240 – 0.260 mm	(0.0094 – 0.0102 in)
		841968604		0.290 – 0.310 mm	(0.0114 – 0.0122 in)
		841968605		0.490 – 0.510 mm	(0.0193 – 0.0201 in)
		841968606		0.165 – 0.185 mm	(0.0065 – 0.0073 in)
		841968607		0.215 – 0.235 mm	(0.0085 – 0.0093 in)
		841968608		0.265 – 0.285 mm	(0.0104 – 0.0112 in)
for 1800		Part No.			
		441967101		0.15 mm	(0.0059 in)
		441967102		0.175 mm	(0.0069 in)
		441967103		0.20 mm	(0.0079 in)
		441967104		0.225 mm	(0.0089 in)
		441967105		0.25 mm	(0.0098 in)
		441967106		0.275 mm	(0.0108 in)
		441967107		0.30 mm	(0.0118 in)
		441967108		0.50 mm	(0.0197 in)
Input shaft cotter thickness (4WD Dual-range)					
		Part No.			
		447257000		2.43 mm	(0.0957 in)
		447257001		2.51 mm	(0.0988 in)
		447257002		2.59 mm	(0.1020 in)
Snap ring (In-56) thickness (4WD Dual-range)					
		Part No.			
		805156020		1.75 mm	(0.0689 in)
		805156021		1.83 mm	(0.0720 in)
		805156022		1.91 mm	(0.0752 in)

Downloaded from www.Manualslib.com manuals search engine

Manual transmission (continued)	Input shaft holder shim quantity (4WD Dual-range)		
	Dimension 'D'		
	50.39 mm (1.9839 in) or more		Nothing
	50.38 – 49.89 mm (1.9835 – 1.9642 in)		1
	49.88 mm (1.9638 in) or less		2
	Reverse shifter rail arm remarks (4-speed)		
	Part No.	Mark	
	842004101	1	Moves toward case wall (L.H.)
	842004102	No mark	Standard
	842004103	3	Recedes from case wall (L.H.)
	1st–2nd shifter fork remarks		
	for 1600	Part No.	Mark
	842024121	1	Moves 0.4 mm (0.016 in) toward 2nd gear
	842024122	No mark	Standard
	842024123	3	Moves 0.4 mm (0.016 in) toward 1st gear
	842024124	4	Moves 0.2 mm (0.008 in) toward 2nd gear
	842024125	5	Moves 0.2 mm (0.008 in) toward 1st gear
	for 1800	Part No.	Mark
	442027001	1	Remarks
	442027002	2	Moves 0.4 mm (0.016 in) toward 2nd gear
	442027003	No mark	Moves 0.2 mm (0.008 in) toward 2nd gear
	442027004	4	Standard
	442027005	5	Moves 0.2 mm (0.008 in) toward 1st gear
			Moves 0.4 mm (0.016 in) toward 1st gear
	3rd–4th shifter fork remarks		
	for 1600	Part No.	Mark
	842014121	1	Moves 0.4 mm (0.016 in) toward 4th gear
	842014122	No mark	Standard
	842014123	3	Moves 0.4 mm (0.016 in) toward 3rd gear
	842014124	4	Moves 0.2 mm (0.008 in) toward 4th gear
	842014125	5	Moves 0.2 mm (0.008 in) toward 3rd gear
	for 1800	Part No.	Mark
	442017001	1	Remarks
	442017002	2	Moves 0.4 mm (0.016 in) toward 4th gear
	442017003	No mark	Moves 0.2 mm (0.008 in) toward 4th gear
	442017004	4	Standard
	442017005	5	Moves 0.2 mm (0.008 in) toward 3rd gear
			Moves 0.4 mm (0.016 in) toward 3rd gear
	5th shifter fork remarks		
	for 1600	Part No.	Mark
	342031711	1	Moves 0.4 mm (0.016 in) toward gear side
	342031712	2	Moves 0.2 mm (0.008 in) toward gear side
	342031713	No mark	Center
	342031714	4	Recedes 0.2 mm (0.008 in) from gear side
	342031715	5	Recedes 0.4 mm (0.016 in) from gear side
	for 1800	Part No.	Mark
	442037011	1	Moves 0.4 mm (0.016 in) toward gear side
	442037012	2	Moves 0.2 mm (0.008 in) toward gear side
	442037013	No mark	Center
	442037014	4	Recedes 0.2 mm (0.008 in) from gear side
	442037015	5	Recedes 0.4 mm (0.016 in) from gear side

Downloaded from www.Manualslib.com manuals search engine

Manual transmission (continued)	Reverse shifter lever remarks				
	for 1600	Part No.	Mark		
		340621701	1	Recedes from the case wall	
		340621702	No mark	Center	
		340621703	3	Moves toward the case wall	
	for 1800	Part No.	Mark		
		440627101	1	Recedes from the case wall	
		440627102	No mark	Center	
		440627103	3	Moves toward the case wall	
	Shifter rail spring free length				
	for 1600		Color		
		Reverse/5th	Colorless	32.1 mm	(1.264 in)
		3rd/4th	Colorless	32.1 mm	(1.264 in)
		1st/2nd	Yellow	33.6 mm	(1.324 in)
	for 1800 (Except 4WD)		Color		
		Reverse/5th	Colorless	32.1 mm	(1.264 in)
		3rd/4th	Blue	33.8 mm	(1.331 in)
		1st/2nd	Colorless	32.1 mm	(1.264 in)
	for 1800 4WD		Color.		
		Reverse	Colorless	32.1 mm	(1.264 in)
		3rd/4th	Red	33.3 mm	(1.311 in)
		1st/2nd	Colorless	32.1 mm	(1.264 in)
	Side gear to pinion backlash (Differential)				
		1600	STD	0.05 – 0.15 mm	(0.0020 – 0.0059 in)
		1800	STD	0.13 – 0.18 mm	(0.0051 – 0.0071 in)
	Washer (35.1 x 45 x t mm) thickness				
		Part No.			
		803135011		0.925 – 0.950 mm	(0.0364 – 0.0374 in)
		803135012		0.950 – 0.975 mm	(0.0374 – 0.0384 in)
		803135013		0.975 – 1.000 mm	(0.0384 – 0.0394 in)
		803135014		1.000 – 1.025 mm	(0.0394 – 0.0404 in)
		803135015		1.025 – 1.050 mm	(0.0404 – 0.0413 in)
	Pinion shaft to axle drive shaft tip clearance		STD	0 – 0.2 mm	(0 – 0.008 in)
	Snap ring (Out-26) thickness				
		Part No.			
		805026010		1.00 – 1.10 mm	(0.0394 – 0.0433 in)
		031526000		1.15 – 1.25 mm	(0.0453 – 0.0492 in)
	Drive pinion to crown gear backlash				
		1600	STD	0.1 – 0.18 mm	(0.004 – 0.0071 in)
		1800	STD	0.13 – 0.18 mm	(0.0051 – 0.0071 in)

Downloaded from www.Manualslib.com manuals search engine

1. Component Parts

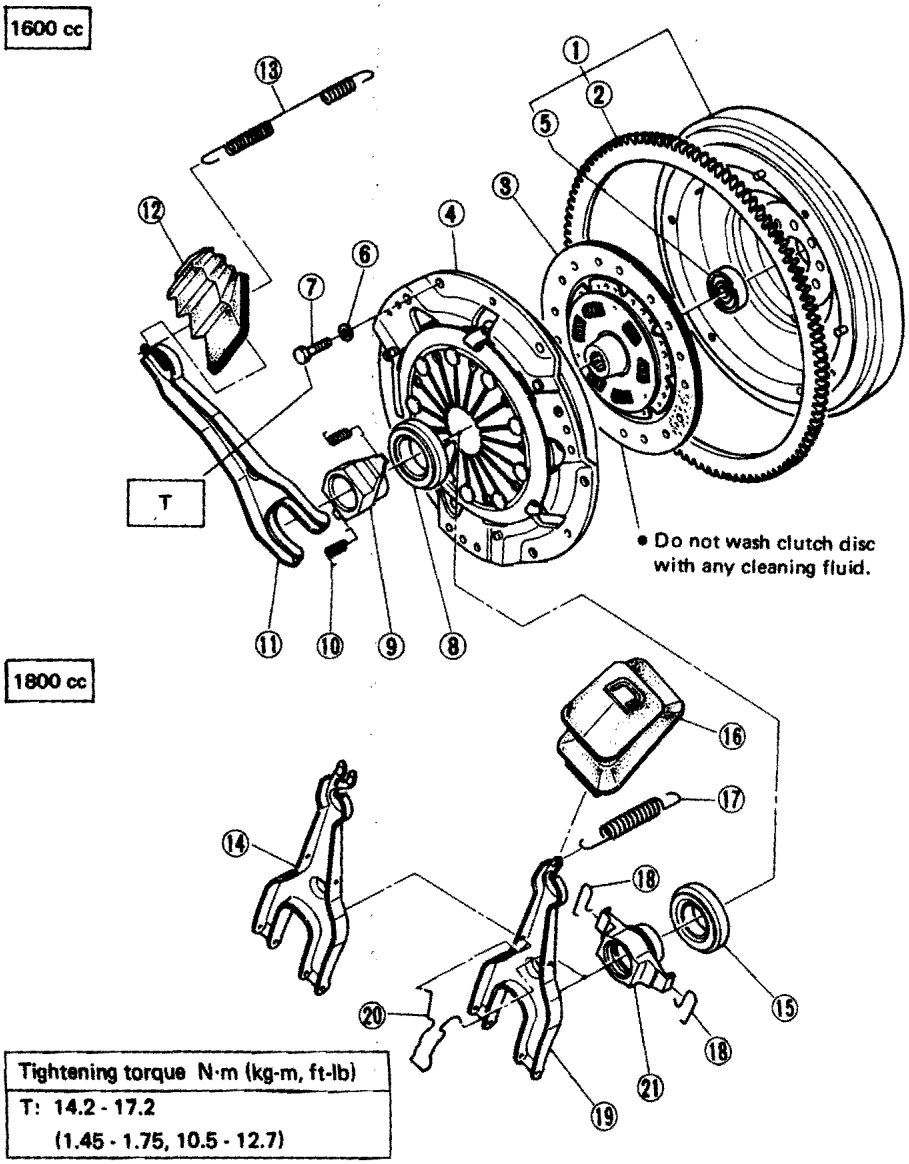

Tightening torque N·m (kg-m, ft-lb)
T: 14.2 - 17.2 (1.45 - 1.75, 10.5 - 12.7)

1 Flywheel complete
2 Starter ring gear
3 Clutch disc
4 Clutch cover
5 Ball bearing
6 Spring washer
7 Bolt
8 Clutch release bearing
9 Release bearing holder
10 Release bearing holder spring
11 Clutch release fork
12 Clutch release fork sealing
13 Release fork spring
14 Clutch release fork (For hill holder)
15 Clutch release bearing
16 Clutch release fork sealing
17 Release fork spring
18 Clip
19 Clutch release fork
20 Retainer spring
21 Release bearing holder

A12-436

Fig. 6-1

2. On-car Service

CLUTCH CONTROL

1) Adjustment of Clutch Play

1) Remove release fork return spring from fork.
2) Adjust spherical nut so that the play is within the specified value at the fork end (center of spherical nut).

NOTE:
Take care not to twist the cable during adjustment.

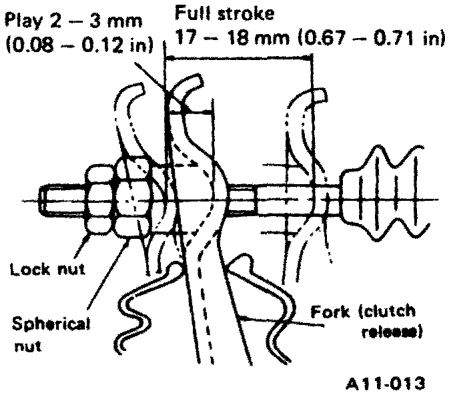

Fig. 6-2 Adjusting clutch play

2) Check

1) Upon completion of adjustment, securely lock spherical nut with lock nut.
2) Install return spring on fork.

NOTE:
Hook the long spring side of the release spring with the fork. (1600)

3) Depress clutch pedal to assure there is no abnormality in the clutch system.

NOTE:
Standard dimensions of clutch control system are as follows:

Downloaded from www.Manualslib.com manuals search engine

Service item	Standard
Full stroke of clutch pedal	129 – 137 mm (5.08 – 5.39 in)
Pad surface position of clutch pedal	Above brake pedal level by 15 mm (0.59 in)
Release fork stroke	17 – 18 mm (0.67 – 0.71 in)
Play at release fork center	2 – 3 mm (0.08 – 0.12 in)

3) Precautions

When reinstallation, pay attention to the following items.
1) Check the routing of clutch cable for smoothness.
2) Excessive tighteness or looseness of clutch cable have a bad influence upon the cable durability.
3) Apply grease sufficiently to the connecting portion of clutch pedal.
4) Apply grease sufficiently to the release fork portion.
5) Position clutch cable through the center of toeboard hole and route it smoothly. Adjustment is done by moving the outer cable.
6) Make sure not to make clutch chattering at starting forward or rearward. If clutch chattering occurs, readjust so that the bend of clutch outer cable becomes flatter.

3. Removal

1) Clutch cover CP and clutch disc CP.

NOTE:
a. Take care not to allow oil on the clutch disc facing.
b. Do not disassemble either clutch cover CP or clutch disc CP.

2) Release bearing holder and clutch release fork.

1600

1. Release bearing holder springs
2. Release bearing holder
3. Clutch release fork and sealing

1800

1. Two clips from fork
2. Release bearing holder
3. Retainer spring from pivot
4. Clutch release fork and sealing

NOTE:
Be careful not to deform clutch fork & holder clip and clutch fork retaining spring.

Downloaded from www.Manualslib.com manuals search engine

4. Inspection

Inspect all the disassembled parts for wear or damage, and repair or replace if necessary.

No.	Parts	Inspection	Corrective action
1	Clutch disc CP.	(1) Wear of facing	Measure the depth of rivet head from the surface of facing. Replace if facings are worn locally or worn down to less than the specified value. Depth of rivet head Standard value: 1.4 mm (0.055 in) Limit of sinking: 0.3 mm (0.012 in) **NOTE:** **Do not wash clutch disc with any cleaning fluid.**
		(2) Hardened facing	Correct by using emery paper or replace.
		(3) Oil soakage on facing	Replace clutch disc and inspect transmission front oil seal, transmission case mating surface, engine rear oil seal and other points for oil leakage.
		(4) Deflection of facing	If deflection exceeds the specified value at the outer circumference of facing, repair or replace. Limit for deflection 0.7 mm (0.028 in) at R = 95 mm (3.74 in) ... 1600 and non-4WD of 1800 R = 107 mm (4.21 in) ... 1800 4WD 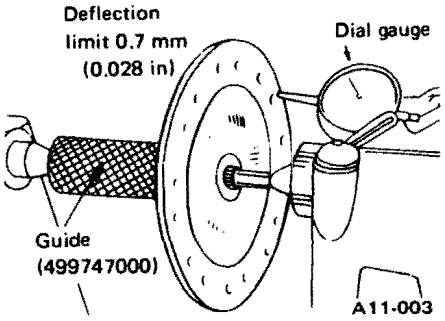 *Fig. 6-3 Measuring clutch disc deflection*
		(5) Worn spline, loose rivets and torsion spring failure.	Replace.

Downloaded from www.Manualslib.com manuals search engine

No.	Parts	Inspection	Corrective action
2	Clutch cover CP	Visually check for the following items without disassembling. 1) Loose thrust rivet ①. 2) Damaged or worn bearing contact area at center of diaphragm spring ②. 3) Damaged or worn disc contact surface of pressure plate ③. 4) Loose strap plate setting bolt ④. 5) Worn diaphragm sliding surface ⑤. 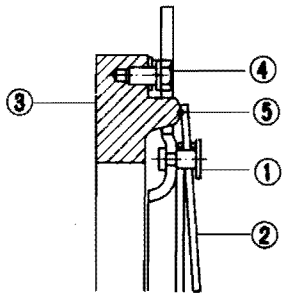 *Fig. 6-4*	Repair or replace.
3	Clutch release bearing. **NOTE:** **Since this bearing is grease-sealed and is of a non-lubrication type, do not wash with gasoline or any solvent when servicing the clutch.**	(1) Smoothness of rotation Rotate bearing applying pressure in thrust direction.	Repair or replace.
		(2) Wear and damage of holder surface contacting with fork	Repair or replace. Replacing of clutch release bearing 1) Remove bearing out of holder. 2) Press bearing. **NOTE:** **Do not depress outer race.** 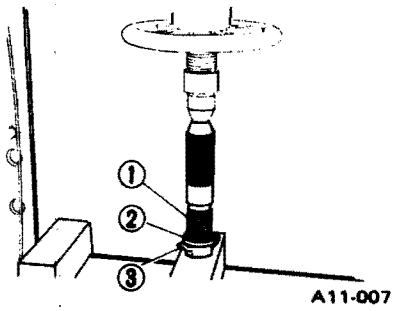 1 Press (899754112) 2 Bearing (Clutch release) 3 Holder (Release bearing) *Fig. 6-5 Installing clutch release bearing*
4	Clutch release fork.	Check fork pivot portion and the point of contact with holder for wear.	Repair or replace.

Downloaded from www.Manualslib.com manuals search engine

No.	Parts	Inspection	Corrective action
5	Flywheel CP **NOTE:** **Since this bearing is grease-sealed and is of a non-lubrication type, do not wash with gasoline or any solvent.**	(1) Damage of facing	Replace.
		(2) Smoothness of rotation Rotate ball bearing applying pressure in thrust direction.	Repair or replace. Pressing of ball bearing Press bearing into flywheel until bearing end surface is flush with flywheel. **NOTE:** **Do not press inner race.** 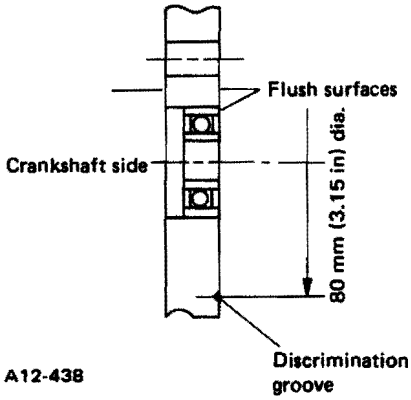 *Fig. 6-6 Pressing bearing* **NOTE:** **a. 1600 cc flywheel has discrimination groove on its surface of clutch cover side.** **b. Clutch pilot bearing spec. is as follows:**

	Parts No.	Size	Color
1800	806212020	12x32x10mm (0.47x1.26x 0.39 in)	Black
1600	806212030	12x32.5x10 mm (0.47x1.28x 0.39 in)	Brown

Downloaded from www.Manualslib.com manuals search engine

5. Installation

1) Install clutch release fork and release bearing holder.

NOTE:
Before or during assembling, lubricate the following points with a light coat of grease.
a. Inner groove of release bearing holder.
b. Contact surface of fork and pivot.
c. Contact surface of fork and holder.
d. Transmission main shaft spline. (Use grease containing molybdenum disulphide.)

1600

a. Install clutch release fork and release bearing holder CP, and then retain with two release bearing holder springs.

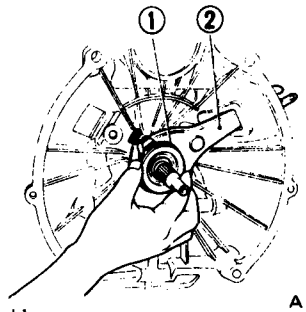

1 Holder
2 Fork

Fig. 6-7 Installing holder and fork

b. Install clutch release fork sealing.

1800

a. Install retainer spring into fork.
b. While pushing fork to pivot and twisting it to both sides, fit retainer spring onto the constricted portion of pivot.

NOTE:
Confirm that retainer spring is securely fitted by seeing through the main case hole.

c. Install holder and fasten it with two clips.
d. Install clutch release fork sealing.

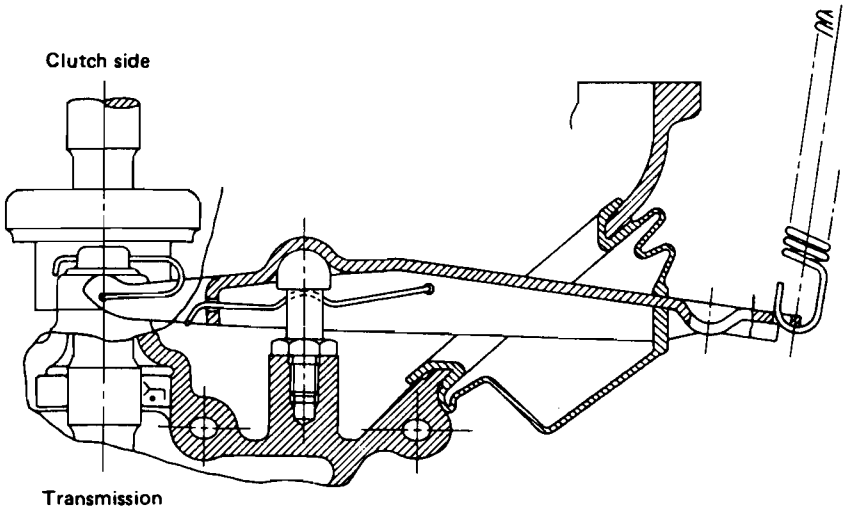

Fig. 6-8 Installing of clutch release fork and relative parts

2) Insert Guide (499747000) into clutch disc CP and install them on flywheel by inserting the end of Guide into pilot bearing.
Install clutch cover CP on flywheel and tighten bolts to the specified torque.

Torque	14.2 – 17.2 N·m (1.45 – 1.75 kg·m, 10.5 – 12.7 ft-lb)

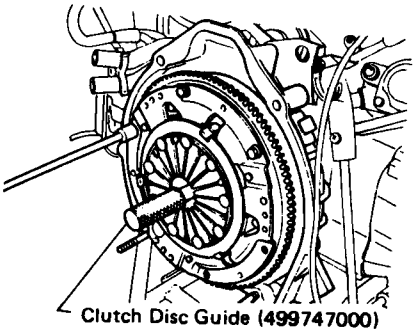

Fig. 6-9 Installing clutch cover

NOTE:
a. When installing the clutch cover on the flywheel, position the clutch cover so that there is a gap of 120° or more between "0" marks on the flywheel and clutch cover.
("0" marks indicate the directions of residual unbalance.)
b. Note the front and rear of the clutch disc when installing.
c. Tighten clutch cover installing bolts gradually.
Each bolt should be tightened in a crisscross fashion to the specified torque.

3) After remounting engine and transmission on body, make adjustment with the nut at the fork end so that the clutch release fork end play is 2 to 3 mm (0.08 to 0.12 in).

NOTE:
Take care not to twist the cable during adjustment.

4) Install release fork return spring.

NOTE:
Hook up the long spring side of the release spring with the fork. (1600)

Downloaded from www.Manualslib.com manuals search engine

6-3. Manual Transmission and Differential

1. Cross Sectional View

- 1800 5-Speed

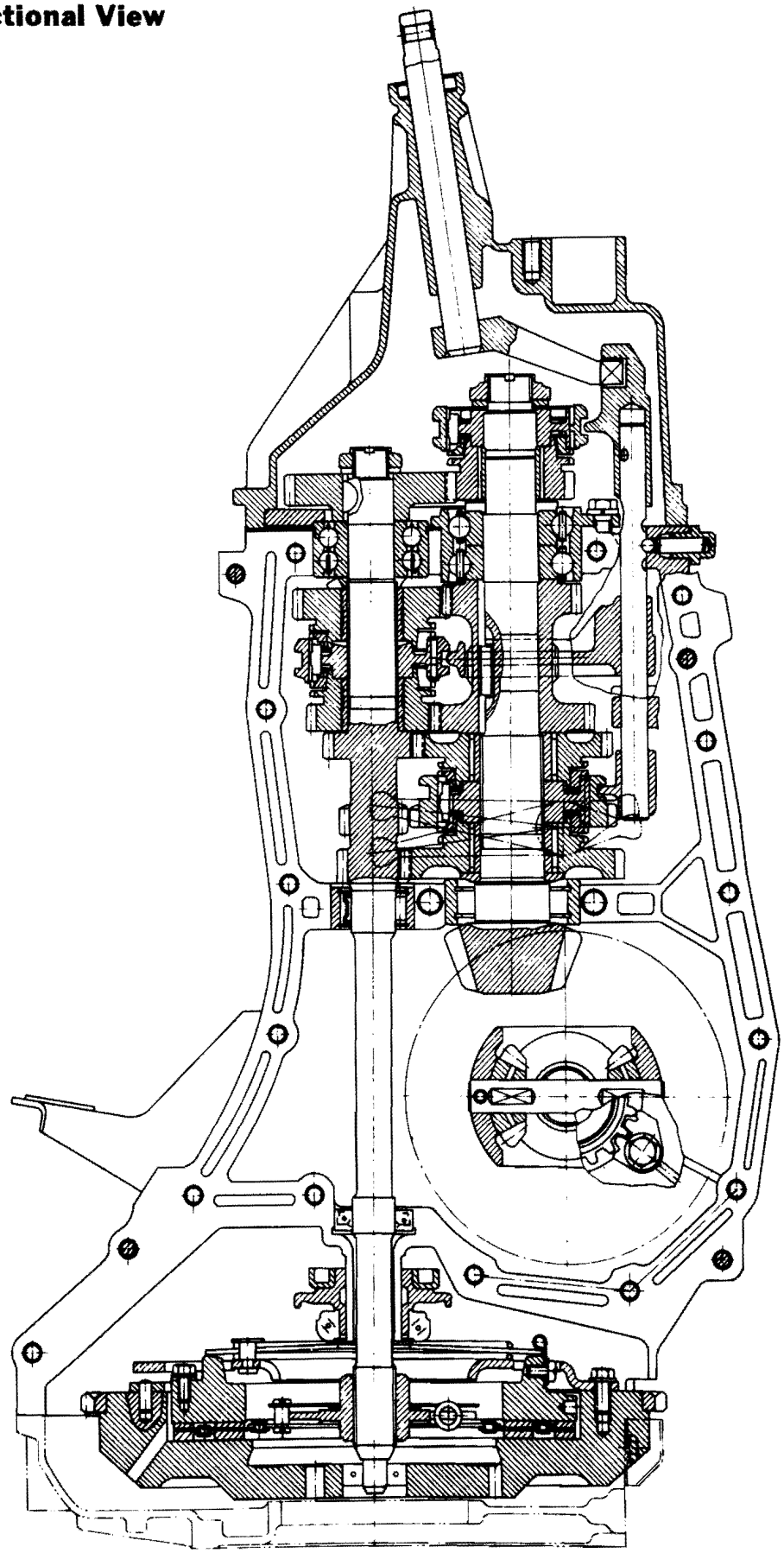

A12-471

Fig. 6-10

Downloaded from www.Manualslib.com manuals search engine

- **1800 4WD Dual-range**

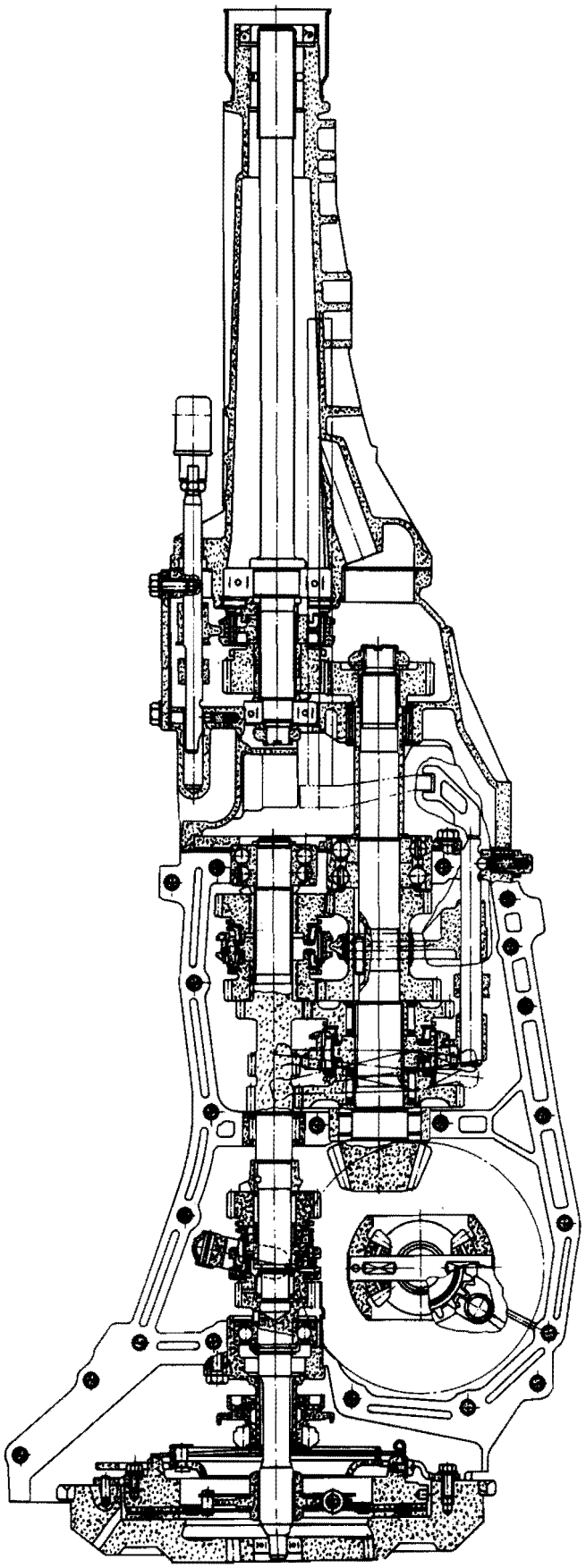

A12-472

Fig. 6-11

Downloaded from www.Manualslib.com manuals search engine

2. Component Parts

1) Transmission Main Case

1600

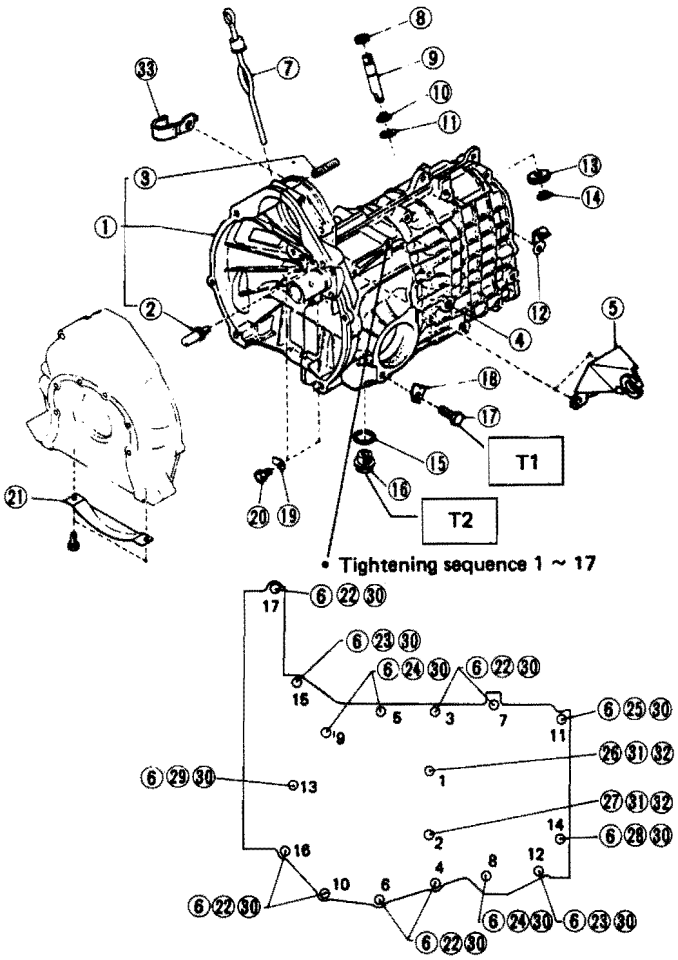

No. 1, 2	36 - 42 N·m (3.7 - 4.3 kg-m, 27 - 31 ft-lb)
No. 3 ~ 17	23 - 26 N·m (2.3 - 2.7 kg-m, 17 - 20 ft-lb)

Tightening torque N·m (kg-m, ft-lb)
T1: 22 -27 (2.2 - 2.8, 16 - 20)
T2: 41 - 47 (4.2 - 4.8, 30 - 35)

1 Transmission main case assembly
2 Pivot
3 Stud
4 Straight pin
5 Clutch cable bracket
6 Nut
7 Oil gauge
8 Oil seal
9 Speedometer shaft
10 Snap ring
11 Washer
12 Back-up light clip
13 Speedometer driven gear
14 Snap ring
15 Gasket
16 Drain plug
17 Bolt
18 Oil seal holder lock plate
19 Release spring bracket
20 Bolt
21 Clutch housing cover
22 Bolt (8 x 62 x 18 mm)
23 Bolt (8 x 110 x 18 mm)
24 Bolt (8 x 130 x 22 mm)
25 Bolt (8 x 119 x 18 mm)
26 Bolt (10 x 152 x 18 mm)
27 Bolt (10 x 168 x 18 mm)
28 Bolt (8 x 152 x 18 mm)
29 Bolt (8 x 168 x 18 mm)
30 Washer
31 Washer
32 Nut
33 Oxygen sensor harness clip

Fig. 6-12

A12-441

1800

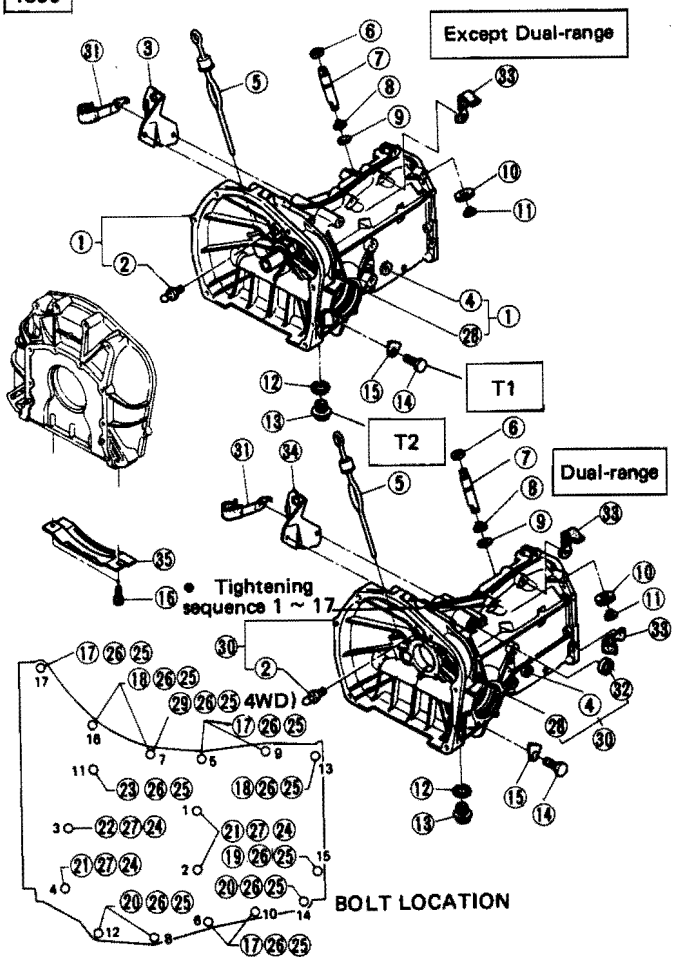

No. 1 ~ 4	36 - 42 N·m (3.7 - 4.3 kg-m, 27 - 31 ft-lb)
No. 5 ~ 17	23 - 26 N·m (2.3 - 2.7 kg-m, 17 - 20 ft-lb)

Tightening torque N·m (kg-m, ft-lb)
T1: 22 - 27 (2.2 - 2.8, 16 - 20)
T2: 41 - 47 (4.2 - 4.8, 30 - 35)

1 Transmission main case assembly
2 Pivot
3 Clutch cable bracket
4 Straight pin
5 Oil gauge complete
6 Oil seal
7 Speedometer shaft
8 Snap ring
9 Washer
10 Speedometer driven gear
11 Snap ring
12 Gasket
13 Oil drain plug
14 Bolt
15 Lock plate
16 Bolt
17 Bolt (8 x 62 x 18 mm)
18 Bolt (8 x 130 x 22 mm)
19 Bolt (8 x 168 x 18 mm)
20 Bolt (8 x 110 x 18 mm)
21 Bolt (10 x 168 x 18 mm)
22 Bolt (10 x 198 x 18 mm)
23 Bolt (8 x 152 x 18 mm)
24 Washer
25 Washer
26 Nut
27 Nut
28 Stud
29 Bolt (8 x 119 x 18 mm)
30 Transmission main case assembly (Dual-range)
31 Oxygen sensor harness clip
32 Back-up light clip
34 Clutch cable bracket (Dual-range)
35 Clutch housing cover (4WD)

A12-442

Downloaded from www.Manualslib.com manuals search engine

2) Rear Case

Tightening torque N·m (kg-m, ft-lb)
T1: 9 - 11 (0.9 - 1.1, 6.5 - 8.0)
T2: 31 - 37 (3.2 - 3.8, 23 - 27)
T3: 23 - 26 (2.3 - 2.7, 17 - 20)
T4: 16 - 20 (1.6 - 2.0, 12 - 14)

*Selective parts

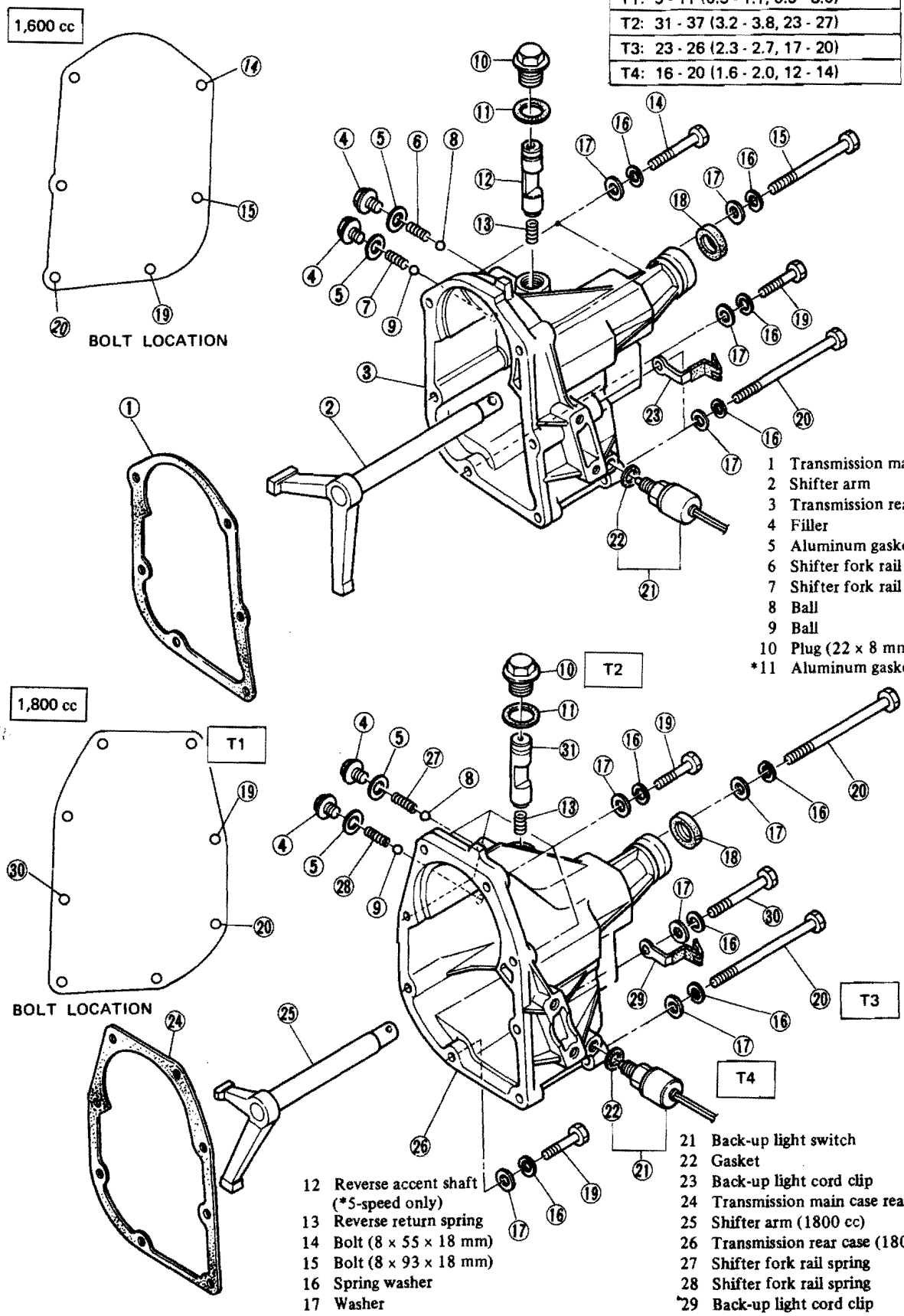

1 Transmission main case rear gasket
2 Shifter arm
3 Transmission rear case
4 Filler
5 Aluminum gasket
6 Shifter fork rail spring
7 Shifter fork rail spring
8 Ball
9 Ball
10 Plug (22 x 8 mm)
*11 Aluminum gasket
12 Reverse accent shaft (*5-speed only)
13 Reverse return spring
14 Bolt (8 x 55 x 18 mm)
15 Bolt (8 x 93 x 18 mm)
16 Spring washer
17 Washer
18 Oil seal
19 Bolt (8 x 38 x 18 mm)
20 Bolt (8 x 119 x 18 mm)
21 Back-up light switch
22 Gasket
23 Back-up light cord clip
24 Transmission main case rear gasket (1800 cc)
25 Shifter arm (1800 cc)
26 Transmission rear case (1800 cc)
27 Shifter fork rail spring
28 Shifter fork rail spring
29 Back-up light cord clip
30 Bolt (8 x 65 x 20 mm)
31 Reverse accent shaft (1800 cc) (*5-speed only)

A12-443

Fig. 6-13

Downloaded from www.Manualslib.com manuals search engine

3) Transfer Case

4WD

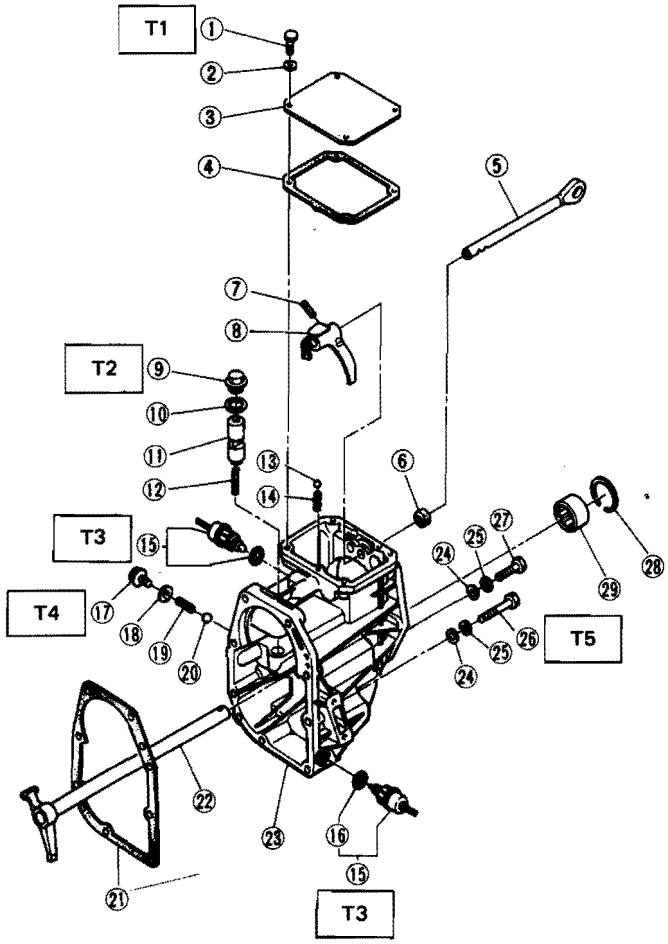

Tightening torque N·m (kg-m, ft-lb)
T1: 18 - 22 (1.8 - 2.2, 13 - 16)
T2: 31 - 37 (3.2 - 3.8, 23 - 27)
T3: 16 - 20 (1.6 - 2.0, 12 - 14)
T4: 9 - 11 (0.9 - 1.1, 6.5 - 8.0)
T5: 22 - 27 (2.2 - 2.8, 16 - 20)

1 Bolt
2 Spring washer
3 Transfer case cover
4 Transfer cover gasket
5 Transfer shifter rail
6 Oil seal
7 Straight pin
8 Transfer shifter fork
9 Plug (22 x 8 mm)
10 Gasket
11 Reverse accent shaft
12 Reverse return spring
13 Ball
14 Shifter fork rail spring
15 Back-up light switch assembly
16 Aluminum gasket
17 Filler
18 Aluminum gasket
19 Reverse accent spring
20 7.144 ball
21 Transmission gasket
22 Shifter arm CP
23 Transfer case
24 Washer
25 Spring washer
26 Bolt
27 Bolt
28 Snap ring
29 Needle bearing

Fig. 6-14

A12-444

4WD Dual-range

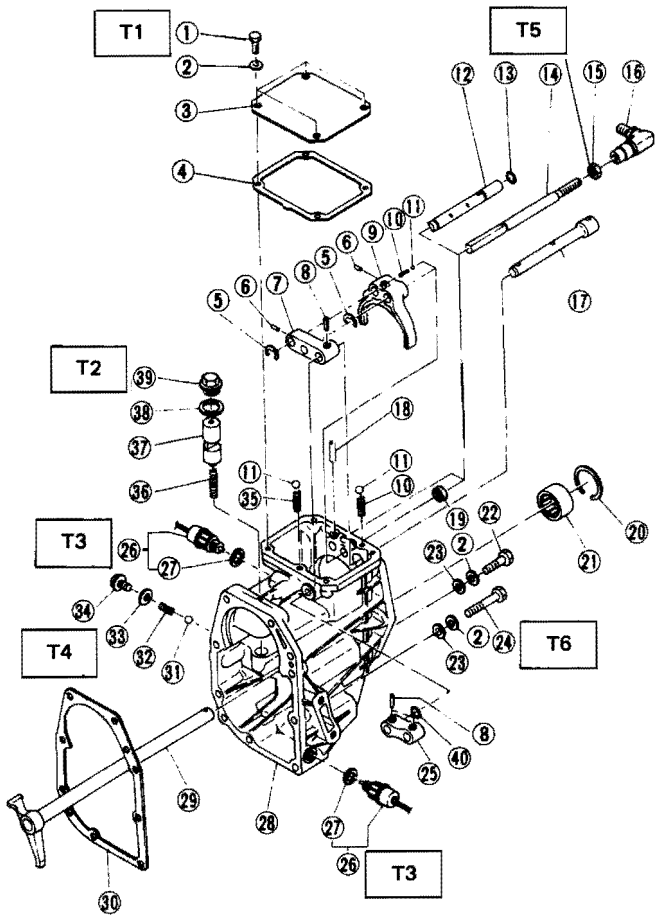

Tightening torque N·m (kg-m, ft-lb)
T1: 18 - 22 (1.8 - 2.2, 13 - 16)
T2: 31 - 37 (3.2 - 3.8, 23 - 27)
T3: 16 - 20 (1.6 - 2.0, 12 - 14)
T4: 9 - 11 (0.9 - 1.1, 6.5 - 8.0)
T5: 30 - 36 (3.1 - 3.7, 22 - 27)
T6: 22 - 27 (2.2 - 2.8, 16 - 20)

1 Bolt
2 Spring washer
3 Transfer case cover
4 Transfer cover gasket
5 Clip
6 5.56 x 10.1 plunger
7 High-low shifter arm
8 Straight pin (5 x 22)
9 Transfer shifter fork
10 Spring
11 6.350 ball
12 Interlock rail
13 O-ring (10 x 2)
14 Transfer shifter rail
15 Nut
16 Transfer ball joint assembly
17 High-low shifter rail
18 Knock pin
19 Oil seal (13 x 22 x 6)
20 Snap ring (Inner-45)
21 Needle bearing
22 Bolt (8 x 38 x 18)
23 Washer
24 Bolt (8 x 65 x 20)
25 Rod arm
26 Back lamp switch
27 Gasket
28 Transfer case unit
29 Shifter arm complete
30 Main case rear gasket
31 7.1438 ball
32 Reverse accent spring
33 Gasket
34 Filler
35 Shifter fork spring
36 Reverse return spring
37 Reverse accent shaft
38 Gasket
39 Plug
40 O-ring

A12-445

Downloaded from www.Manualslib.com manuals search engine

4) Extension

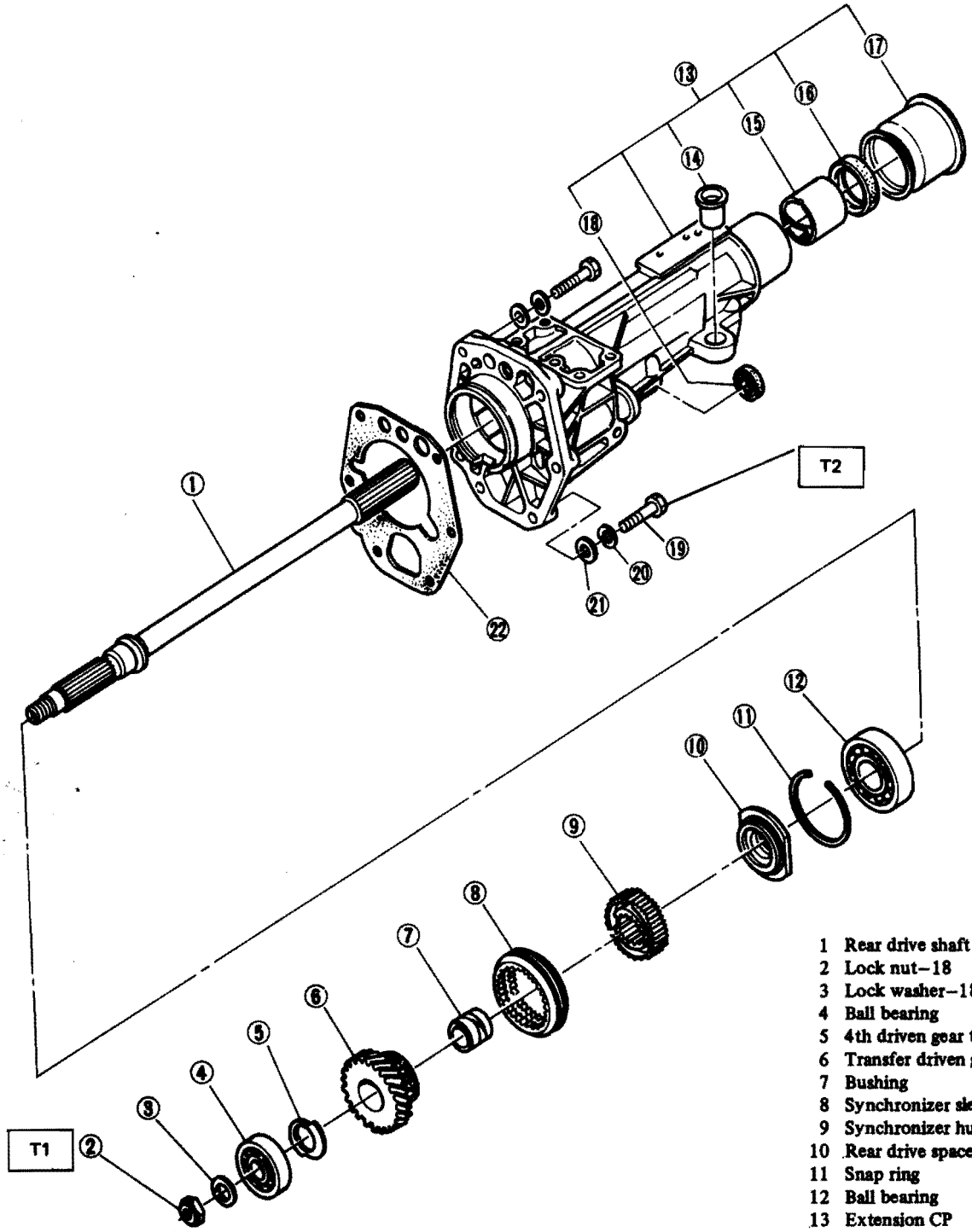

- Use Socket Wrench (899988608) and Holder (899884100)

Tightening torque N·m (kg-m, ft-lb)
T1: 73 - 84 (7.4 - 8.6, 54 - 62)
T2: 34 - 40 (3.5 - 4.1, 25 - 30)

1 Rear drive shaft
2 Lock nut–18
3 Lock washer–18
4 Ball bearing
5 4th driven gear thrust plate
6 Transfer driven gear
7 Bushing
8 Synchronizer sleeve
9 Synchronizer hub
10 Rear drive spacer
11 Snap ring
12 Ball bearing
13 Extension CP
14 Change rod bushing
15 Bushing
16 Oil seal
17 Extension dust cover
18 Oil seal
19 Bolt
20 Spring washer
21 Washer
22 Transfer rear gasket

Fig. 6-15

A12-446

Downloaded from www.Manualslib.com manuals search engine

5) Shifter Fork and Shifter Rail

* Selective parts

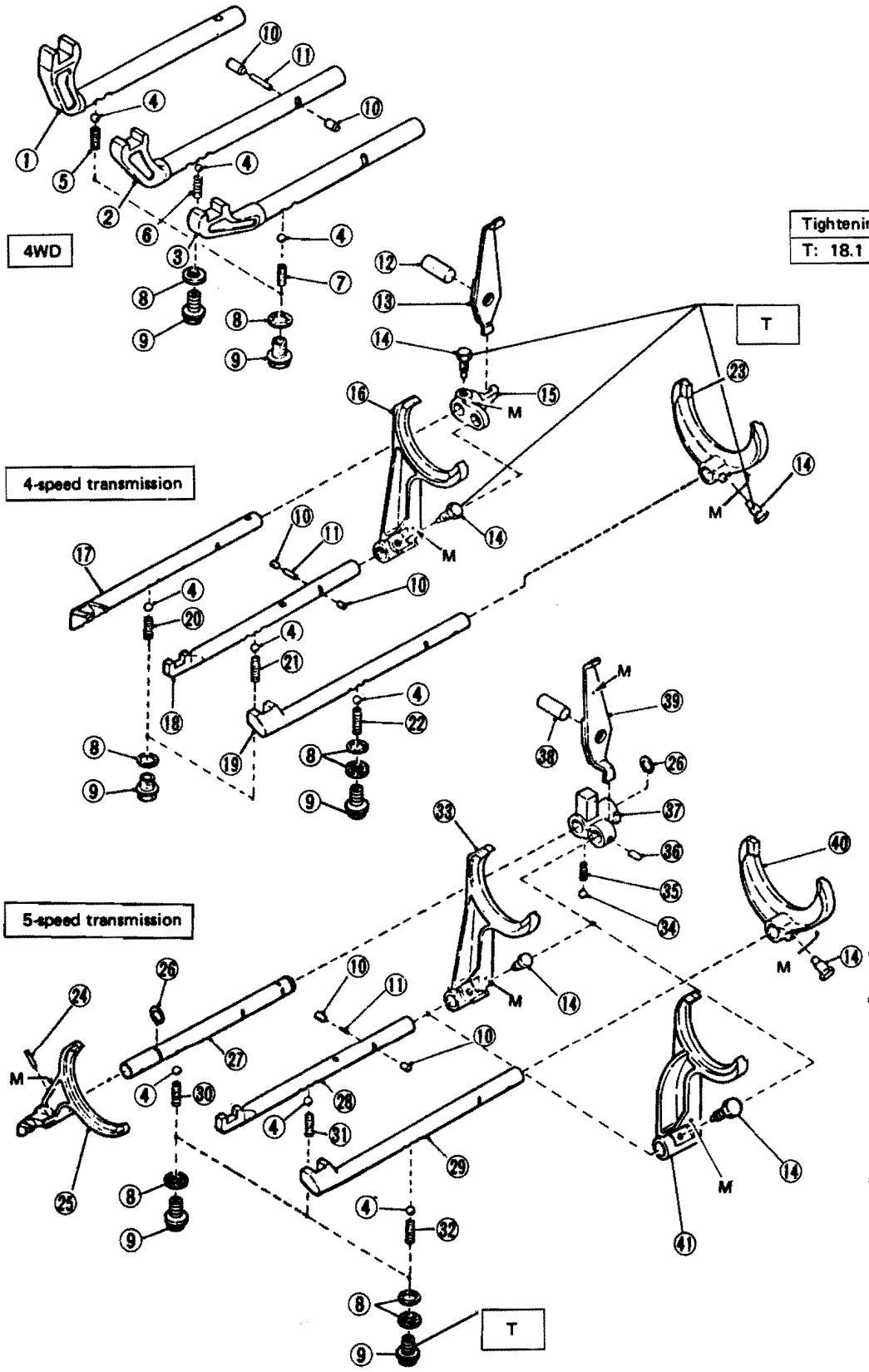

Tightening torque N·m (kg-m, ft-lb)
T: 18.1 - 21.1 (1.85 - 2.15, 13.4 - 15.6)

1 Reverse shifter rail
2 3rd-4th shifter rail
3 1st-2nd shifter rail
4 7.144 ball
5 Shifter fork spring
6 Shifter fork spring
7 Shifter fork spring
8 Aluminum gasket
9 Plug
10 5.56 x 10.1 plunger
11 3 x 11.9 plunger
12 Straight pin
13 Reverse lever CP
14 Shifter fork set screw
*15 Reverse shifter arm
*16 3rd-4th shifter fork
17 Reverse shifter rail
18 3rd-4th shifter rail
19 1st-2nd shifter rail
20 Shifter fork spring
21 Shifter fork spring
22 Shifter fork spring
*23 1st-2nd shifter fork
24 Spring pin
*25 5th shifter fork
26 Snap ring
27 Reverse shifter rail
28 3rd-4th shifter rail
29 1st-2nd shifter rail
30 Shifter fork spring
31 Shifter fork spring
32 Shifter fork s ring
*33 3rd-4th shifte fork
34 5.556 ball
35 Reverse shifter arm spring
36 5.56 x 10.1 plunger
37 Reverse shifter arm
38 Straight pin
*39 Reverse lever CP
*40 1st-2nd shifter fork
*41 3rd-4th shifter fork (1,800 cc)

Fig. 6-16

A12-447

Downloaded from www.Manualslib.com manuals search engine

6) Transmission Main Shaft

* Selective parts

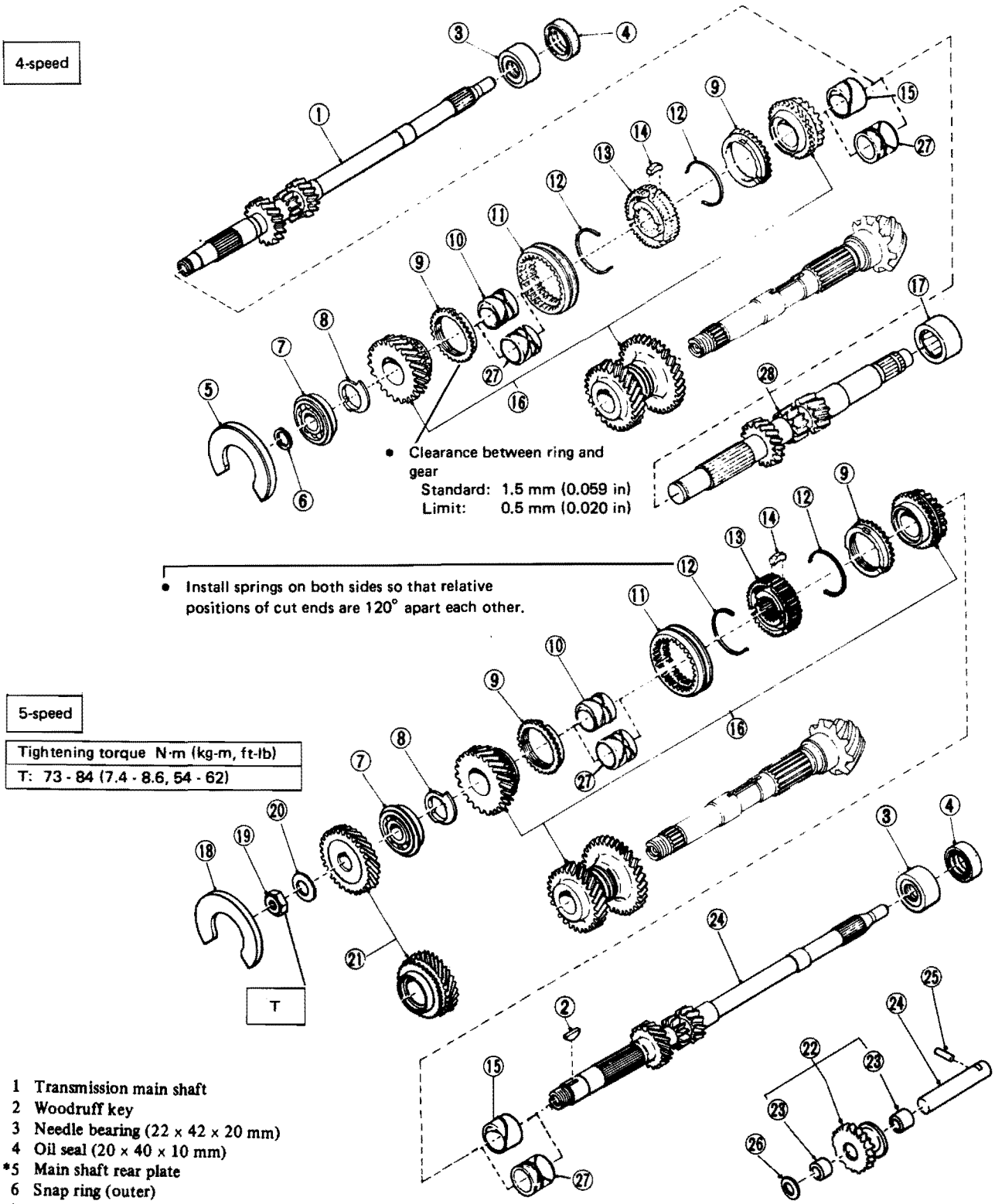

1 Transmission main shaft
2 Woodruff key
3 Needle bearing (22 x 42 x 20 mm)
4 Oil seal (20 x 40 x 10 mm)
*5 Main shaft rear plate
6 Snap ring (outer)
7 Ball bearing (22 x 58 x 25 mm)
8 4th drive gear thrust plate
9 Synchronizer ring
10 4th drive gear bushing
11 Synchronizer sleeve
12 Synchronizer hub spring
13 Synchronizer hub
14 Synchronizer hub insert
15 3rd drive gear bushing
16 4th-3rd gear set
17 Needle bearing
*18 Main shaft rear plate
19 Lock nut-18
20 Lock washer-18
21 5th gear set
22 Reverse idler gear CP
23 Reverse idler gear bushing
24 Reverse idler gear shaft
25 Knock pin
26 Washer (* 5-speed only)
27 3rd-4th drive gear bushing
28 Transmission main shaft (4WD)

Fig. 6-17

A12-448

Downloaded from www.Manualslib.com manuals search engine

7) Drive Pinion

4-speed, 4WD

* Selective parts

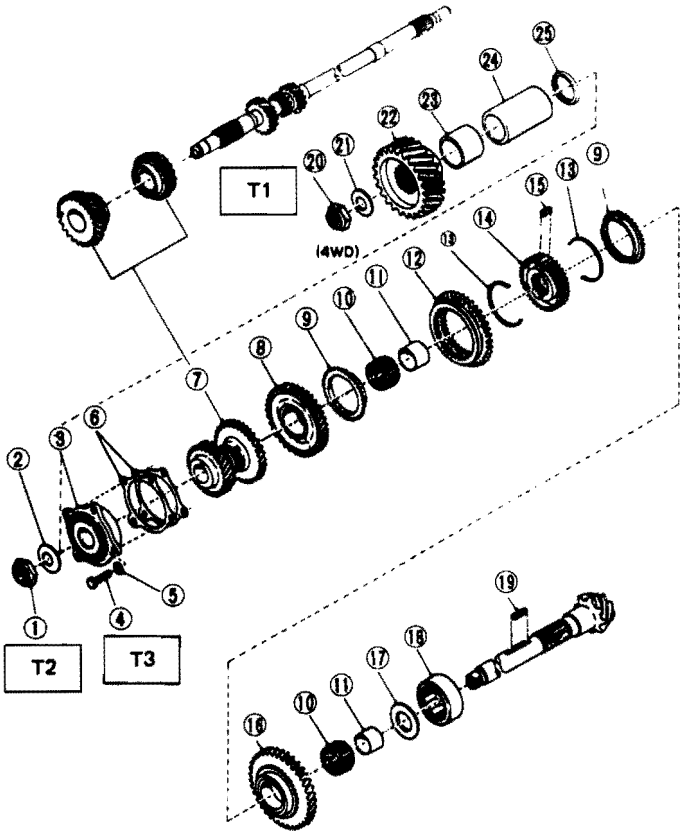

Tightening torque N·m (kg-m, ft-lb)
T1: 110 - 126 (11.2 - 12.8, 81 - 93)
T2: 73 - 84 (7.4 - 8.6, 54 - 62)
T3: 26 - 32 (2.7 - 3.3, 20 - 24)

1 Lock nut-22
2 Lock washer-22
3 Ball bearing (25 x 70 x 30 mm)
4 Bolt (8 x 28 x 23 mm)
5 Spring washer
*6 Drive pinion shim
7 4th-3rd gear set
8 2nd driven gear
9 1st-2nd synchronizer ring
10 Needle bearing (37 x 42 x 23.8 mm)
11 1st-2nd needle bearing race
12 Reverse driven gear
13 1st-2nd synchronizer spring
14 1st-2nd synchronizer hub
15 1st-2nd synchronizer insert
16 1st driven gear
17 1st driven gear thrust plate
18 Roller bearing (37.5 x 67 x 22 mm)
19 Key
20 Lock nut-22
21 Lock washer-22
22 Transfer drive gear
23 Transfer needle bearing race
24 Drive pinion collar
25 Washer

A12-449

5-speed

* Selective parts

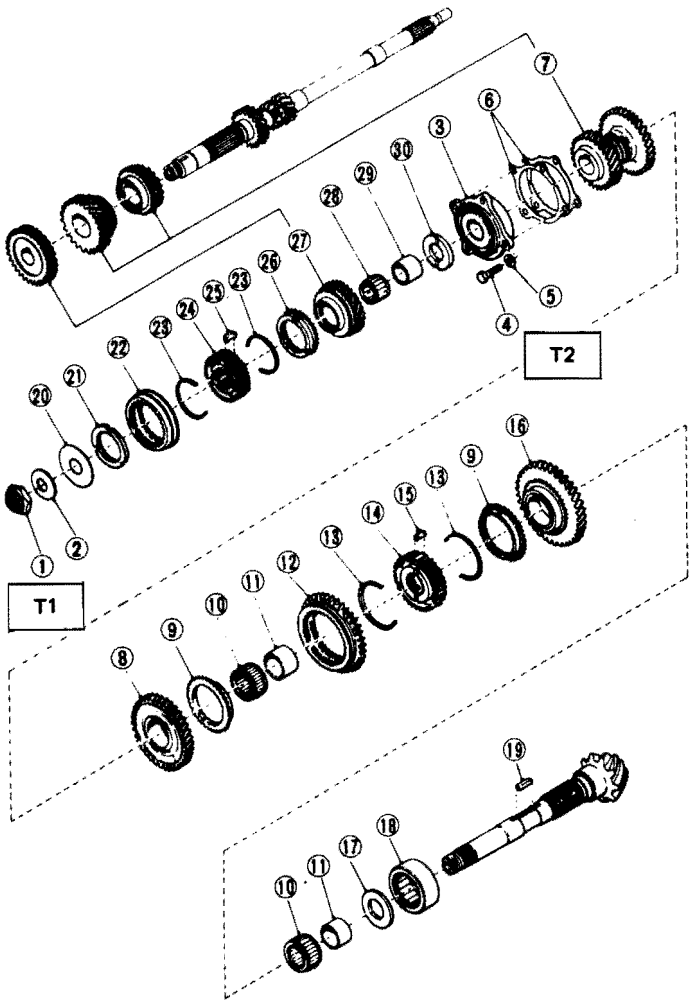

Tightening torque N·m (kg-m, ft-lb)
T1: 73 - 84 (7.4 - 8.6, 54 - 62)
T2: 26 - 32 (2.7 - 3.3, 20 - 24)

1 Lock nut-22
2 Lock washer-22
3 Ball bearing (25 x 70 x 30 mm)
4 Bolt (8 x 28 x 23 mm)
5 Spring washer
*6 Drive pinion shim
7 4th-3rd gear set
8 2nd driven gear
9 1st-2nd synchronizer ring
10 Needle bearing (37 x 42 x 23.8 mm)
11 1st-2nd needle bearing race
12 Reverse driven gear
13 1st-2nd synchronizer spring
14 1st-2nd synchronizer hub
15 1st-2nd synchronizer insert
16 1st driven gear
17 1st driven gear thrust plate
18 Roller bearing (37.5 x 67 x 22 mm)
19 Key
20 Insert stopper plate
21 Insert guide
22 Synchronizer sleeve
23 Synchronizer hub spring
24 Synchronizer hub
25 Synchronizer hub insert
26 Synchronizer ring
27 5th gear set
28 Needle bearing (29 x 33 x 23.8 mm)
29 5th needle bearing race
30 5th driven gear thrust plate

A12-450

Fig. 6-18

Downloaded from www.Manualslib.com manuals search engine

8) Auxiliary Transmission and High-low Shift Linkage

* Selective parts

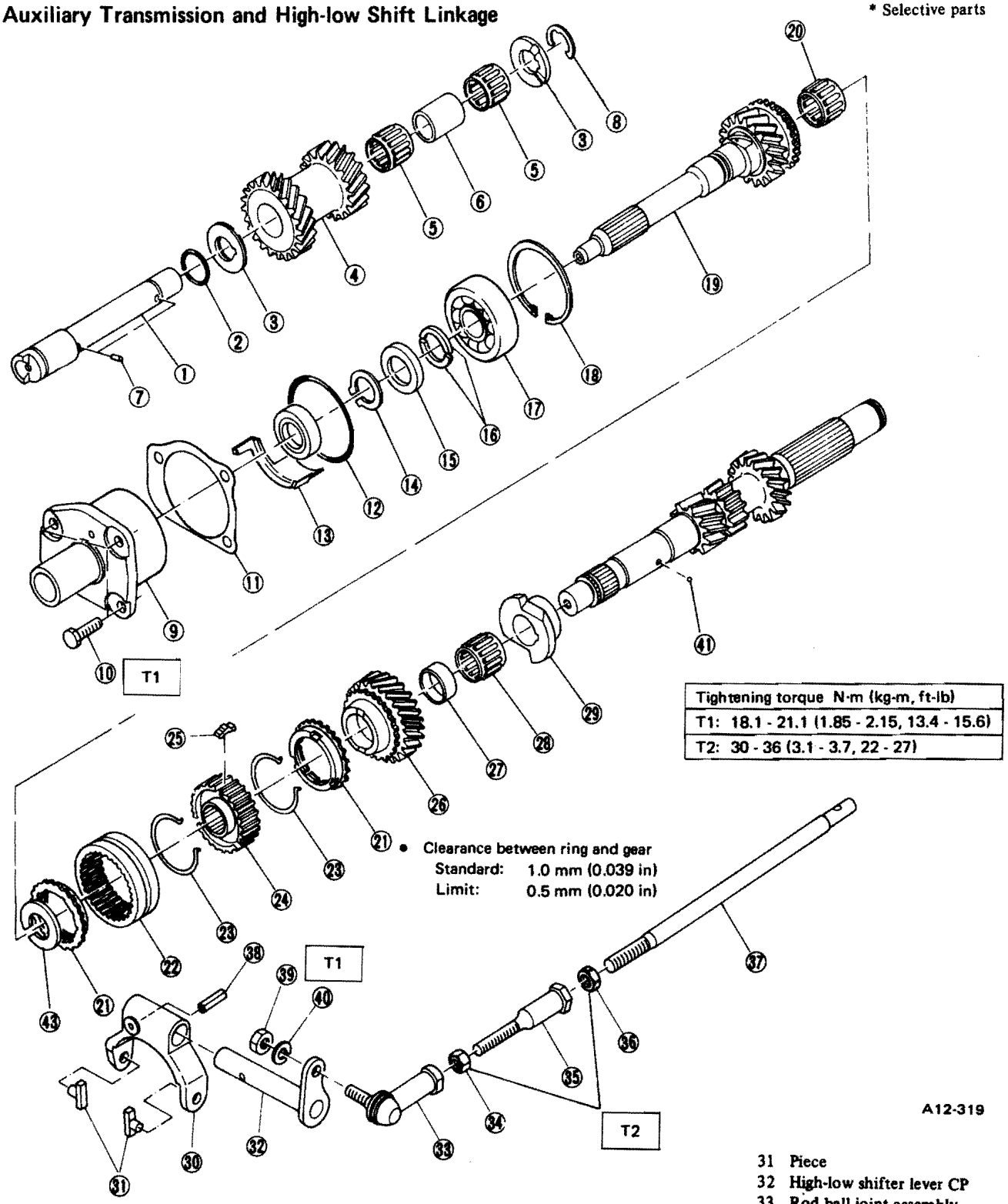

Tightening torque N·m (kg-m, ft-lb)
T1: 18.1 - 21.1 (1.85 - 2.15, 13.4 - 15.6)
T2: 30 - 36 (3.1 - 3.7, 22 - 27)

1 Counter gear shaft
2 O-ring
3 Counter gear washer
4 Counter gear
5 Needle bearing
6 Counter gear collar
7 Knock pin
8 Clip
9 Input shaft holder
10 Bolt
11 Input shaft shim (0 – 2 sheets)
12 O-ring
13 Oil guide
14 Snap ring (Outer)
15 Input shaft retainer
*16 Input shaft cotter
17 Ball bearing (22 x 56 x 16)
*18 Snap ring (Inner-56)
19 Input shaft
20 Needle bearing
21 High-low synchronizer ring
22 High-low synchronizer sleeve
23 Spring
24 High-low synchronizer hub
25 High-low synchronizer insert
26 Input low gear
27 Input low gear collar
28 Needle bearing
29 Input low gear spacer
30 High-low shifter fork
31 Piece
32 High-low shifter lever CP
33 Rod ball joint assembly
34 Nut
35 Rod adjusting screw
36 Nut (Left-hand threaded)
37 High-low shifter rod
38 Spring pin
39 Nut
40 Spring washer
41 3.9688 ball
42 Oil seal (22 x 40 x 10)
*43 Snap ring (Outer-22)

Fig. 6-19

A12-451

Downloaded from www.Manualslib.com manuals search engine

9) Differential

* Selective parts

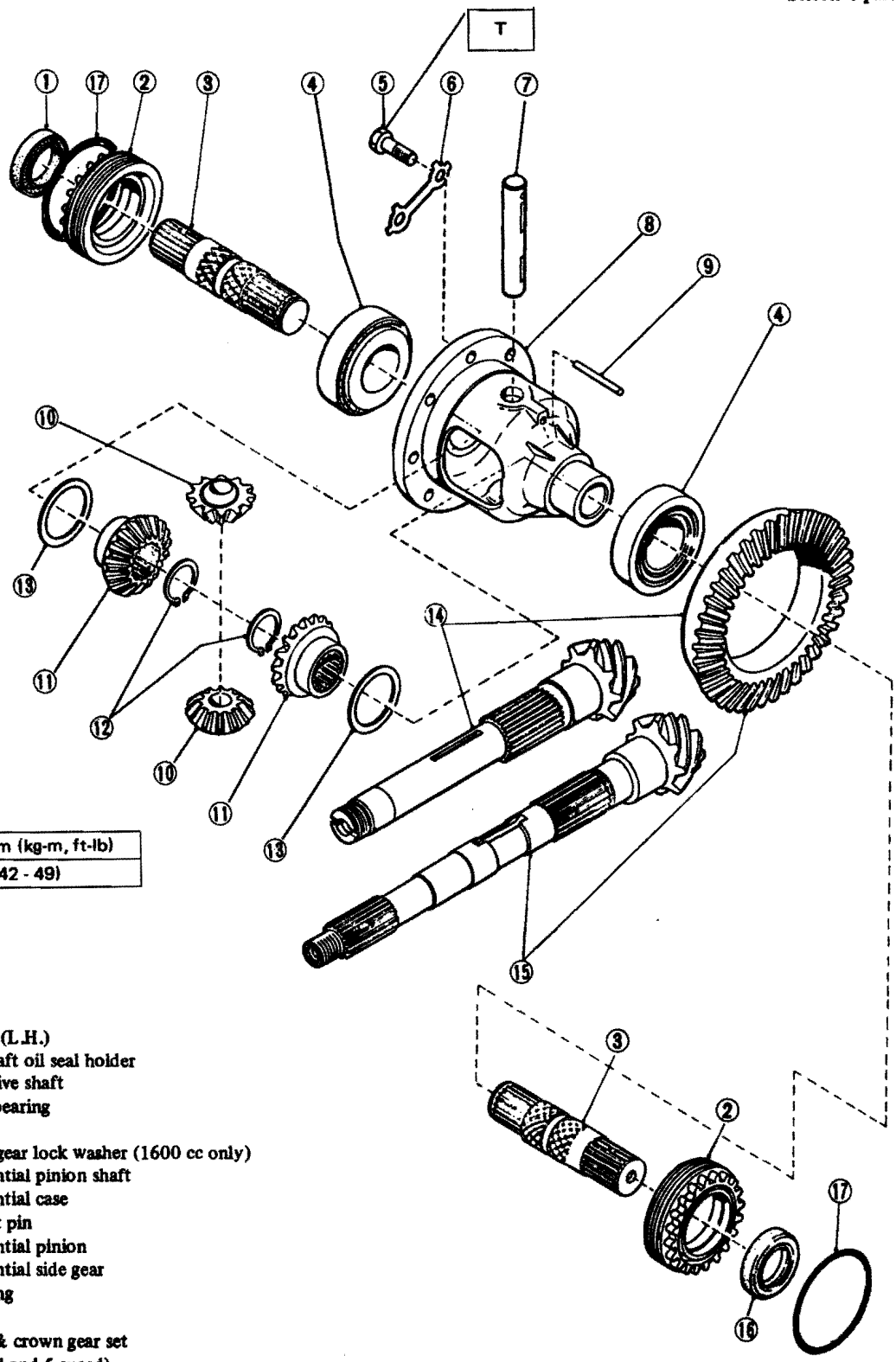

Tightening torque N·m (kg-m, ft-lb)
T: 57 - 67 (5.8 - 6.8, 42 - 49)

1 Oil seal (L.H.)
2 Axle shaft oil seal holder
3 Axle drive shaft
4 Roller bearing
5 Bolt
6 Crown gear lock washer (1600 cc only)
7 Differential pinion shaft
8 Differential case
9 Straight pin
10 Differential pinion
11 Differential side gear
*12 Snap ring
*13 Washer
14 Pinion & crown gear set (4-speed and 5-speed)
15 Pinion & crown gear set (4WD)
16 Oil seal (R.H.)
17 O-ring

A12-452

Fig. 6-20

Downloaded from www.Manualslib.com manuals search engine

3. On-car Service

ADJUSTMENT OF HIGH-LOW SHIFT LINKAGE (WITH TRANSMISSION MOUNTED ON THE BODY)

In case of power not transmitting to axle shaft when select lever is shifted into 'FWD', '4WD HI' or '4WD LO' position, there is a possibility that high-low shift linkage is not adjusted properly. Readjust it according to the following.

NOTE:
Before adjustment, confirm that clutch operates properly.

1) Remove starter.
2) Disconnect harness for back-up light switch and '4WD LO' switch from rear clip on transmission case.

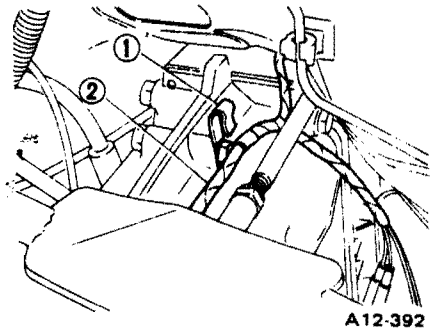

1 Clip
2 Harness

Fig. 6-21 Disconnecting harness

3) Loosen front nut of rod adjusting screw first that connects high-low shifter rod with rod ball joint ASSY, and then loosen rear nut.

NOTE:
Since rear nut is left-hand threaded, pay attention to the rotation direction.

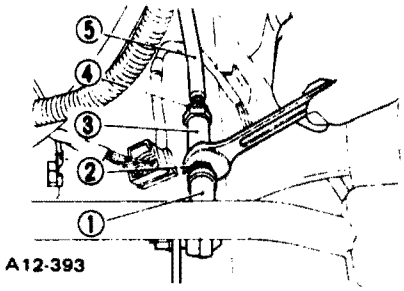

1 Rod ball joint assembly
2 Nut
3 Rod adjusting screw
4 Nut (Left-hand threaded)
5 High-low shifter rod

Fig. 6-22 Loosening nut

4) Shorten the linkage length by turning rod adjusting screw (turnbuckle) clockwise one or two turns.

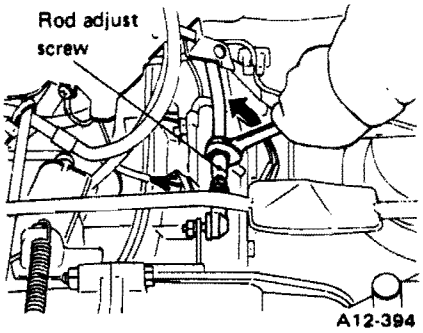

Fig. 6-23 Turning rod adjusting screw

5) Shift select lever into '4WD LO' range.

NOTE:
Pull select lever to its full stroke.

6) Loosen main case attaching bolt and nut that connects the above clip together until the clearance between bolt and case surface becomes 7 mm (0.28 in).

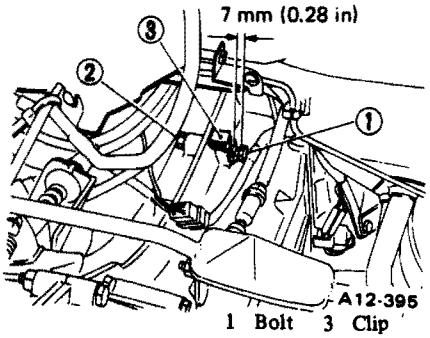

1 Bolt 3 Clip
2 Nut

Fig. 6-24 Loosening bolt and nut

7) Fit Bracket (499167001) included in Stopper ASSY (499167001) on main case.

NOTE:
Before fitting Bracket, bend clip a little in order not to interfere with Bracket.

8) Tighten bolt and nut after the rear end surface of Bracket hits on the main case flange.

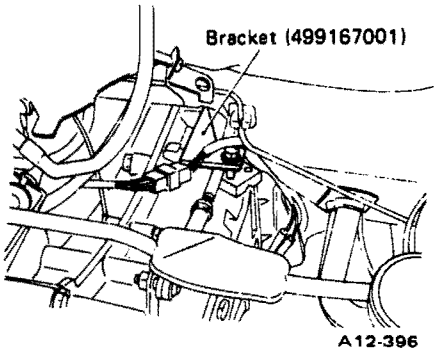

Fig. 6-25 Tightening bolt and nut

9) Fit Holder (499167002) included in Stopper ASSY (499167000) with two bolts to Bracket.

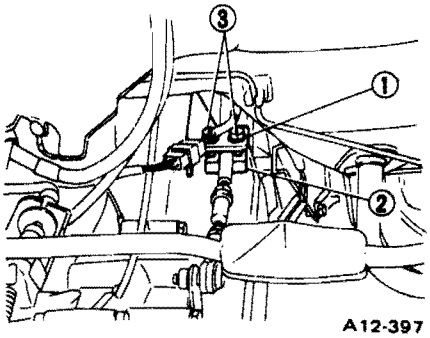

1 Bracket (499167001)
2 Holder (499167002)
3 Bolt

Fig. 6-26 Fitting holder

10) Confirm that select lever does not move.
11) While holding ball joint ASSY, turn rod adjusting screw counterclockwise (This lengthens the linkage length.) and then turn it back 90° clockwise at the point where ball joint movement becomes tight. [Rod adjust screw tightening torque is 2.0 N·m (0.2 kg-m, 1.4 ft-lb).]

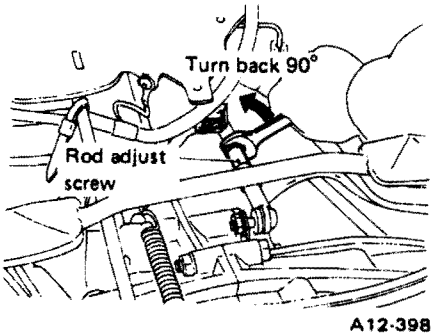

Fig. 6-27 Turning adjusting screw

Downloaded from www.Manualslib.com manuals search engine

12) Tighten rear nut (left-hand threaded) at first, and then tighten front nut while holding rod ball joint ASSY.

Torque	30 – 36 N·m (3.1 – 3.7 kg·m, 22 – 27 ft·lb)

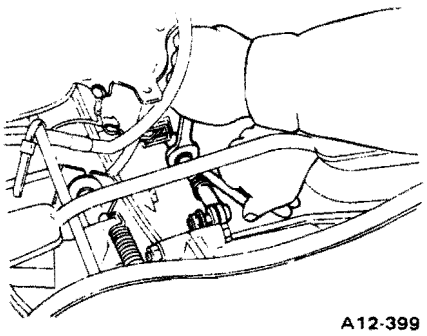

Fig. 6-28 Tighten nut

13) Remove Stopper ASSY and tighten main case attaching bolt and nut.

Torque	23 – 26 N·m (2.3 – 2.7 kg·m, 17 – 20 ft·lb)

14) Restore clip to the original state, and install harness.
15) Install starter.
16) Confirm that there is no abnormality in shift mechanism by operating select lever.

4. Dismounting

1) Open engine hood and hold it securely by a stay.
2) Remove spare wheel.

NOTE:
Do not put the spare wheel or a hand on the air cleaner case to prevent damage of air cleaner case.

3) Disconnect battery cable from negative (–) terminal.
4) Remove spare wheel supporter.
5) Disengage clutch cable as follows.
a. Remove clutch cable return spring.
b. Remove both lock nut and adjusting nut from clutch cable.
c. Unfasten clip which retains outer cable.
d. Detach rubber boot.
6) Disconnect speedometer cable, and unfasten clip on speedometer cable.
7) Disconnect wiring connections.
a. Back-up light switch connector.
b. Ground cable (on the car body).
c. Starter harness.

NOTE:
Do not disconnect the battery cable from the starter.

8) Remove starter with battery cable, and put it on bulkhead.
9) Remove the upper bolts which secure engine to transmission; loosen the lower nuts.

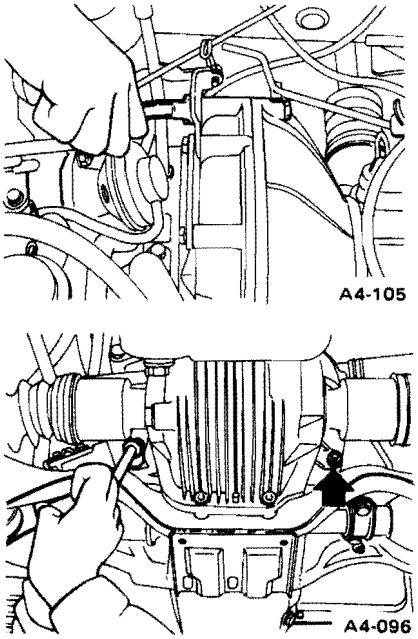

Fig. 6-29 Removing upper bolts and loosening lower nuts

10) Loosen nut [by approximately 10 mm (0.39 in)] which retains pitching stopper to the transmission side, and tighten nut by an equal amount on the engine side. Slightly tilt engine backward in order to facilitate removal of transmission.

NOTE:
Do not tighten the nut more than 10 mm (0.39 in).

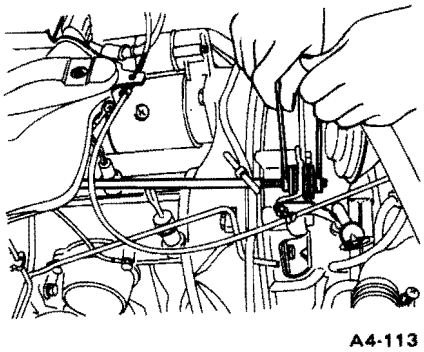

Fig. 6-30

11) On 4WD, separate both the 4WD selector system and gearshift system from transmission as follows.
a. Remove hand brake tray cover, and then hand brake cover.
b. Remove rod cover.
c. Set the drive selector lever at "4WD" position.
d. Remove nut connecting rod B with rod A.

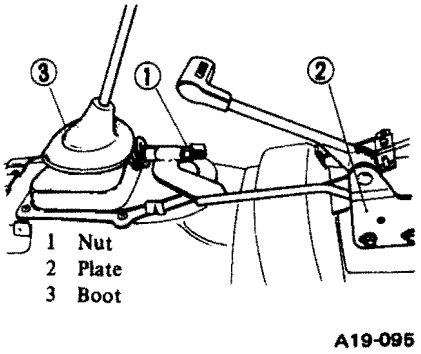

Fig. 6-31

e. Remove two nuts to separate rod B and drive selector lever from plate.
f. Remove boot installing screws.
g. Remove nut connecting gearshift lever with lever, and pull up gearshift lever with boot.
12) Disconnect O_2 sensor harness and unclamp it.
13) Raise the front end of car by placing a jack on the jack-up point in front of side sill.
14) Remove front exhaust pipe ASSY as follows:
a. Disconnect hot air intake hose.
b. Loosen nuts which secure exhaust pipe ASSY to the exhaust port of engine.

Downloaded from www.Manualslib.com manuals search engine

c. Remove bolts which secure front exhaust pipe to rear exhaust pipe.
d. Remove bolts which secure front exhaust pipe to bracket on car body.
e. Supporting front exhaust pipe ASSY, remove nuts from the exhaust port of engine. Exhaust pipe ASSY can now be removed.

NOTE:
Be careful not to strike the oxygen sensor against any adjacent parts during removal.

15) On 4WD remove bolts which secure propeller shaft to rear differential gear, and detach propeller shaft.

NOTE:
a. When disconnecting the propeller shaft, plug the open end of the drive shaft with a cap to prevent the oil from running out of the drive shaft.
b. Be careful not to damage the oil seal located at the end of the propeller shaft.

16) Remove bolts (at two places) which secure the gearshift system to free it from transmission. (except 4WD)
17) Remove stabilizer.
18) Remove bolts which secure left and right transverse links to front crossmember, and lower transverse links.
19) Drive both left and right spring pins out of axle shaft.

NOTE:
Discard and do not re-use the spring pins.

20) Pushing wheels toward the outer side, separate axle shaft from drive shaft.
21) Unfasten clamp on the left side of hand brake cable, in order to facilitate the removal of center crossmember.
22) Remove nuts which secure left and right transmission mount rubber cushions.
23) Securely support transmission by placing a jack under it.
24) Remove crossmember.
25) Remove two nuts which secure engine to transmission, and move transmission away from engine just enough so that transmission main shaft does not interfere with engine.

Lower jack and dismount transmission, exercising care not to strike it against any adjacent parts.

5. Removal

1) Install Stand Set (399295120).
2) Extension and transfer case.

4WD

1. Transfer case cover.
2. Straight pin with Remover II (398791600).
3. Transfer shifter rail, transfer shifter fork, 6.350 ball and shifter fork rail spring.

NOTE:
When pulling out transfer shifter rail, be careful that 6.350 ball does not fly out from transfer case.

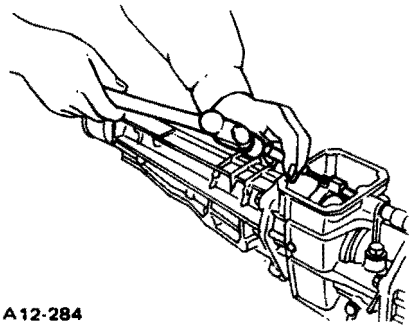

A12-284

Fig. 6-32

4. Extension ASSY by tapping it with a plastic hammer.
5. Lock nut with Socket Wrench (499987003) while fixing transmission main shaft with Stopper (498787000).

NOTE:
a. Before turning lock nut, be sure to release the staked part of nut.
b. Shift the gear to the "1st" position to prevent the shaft from turning.

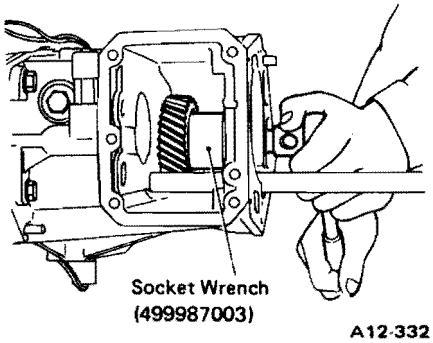

A12-332

Fig. 6-33

6. Transfer drive gear.
7. Transfer case and main shaft rear plate by tapping it with a plastic hammer.

4WD Dual-range

1. Transfer case cover.
2. Separate high-low shifter rod from rod arm with Remover II (39879-1600).

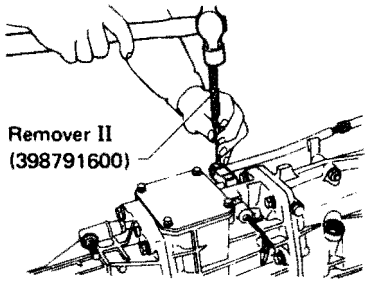

A12-321

Fig. 6-34

3. Clip on transfer shifter rail by using screwdriver or the like, after shifting transfer shifter rail into '4WD-LO' position.
4. Transfer shifter rail.

NOTE:
a. When pulling out transfer shifter rail, set both high-low shifter arm and transfer shifter fork in '4WD-HI' position in order to prevent double meshing.
b. When pulling it out, be careful of 6.350 ball.

5. Pin and clip on interlock rail with pliers or the like.
6. Interlock rail by turning 90°.

NOTE:
a. When pulling out interlock rail, be careful of spring and 6.350 ball.
b. Be careful not to damage O-ring on rail.

7. Transfer shifter fork while turning it in order not to interfere with high-low shifter rail.

NOTE:
Be careful not to drop 6.350 ball, spring and 5.56 x 10.1 plunger in transfer shifter fork.

8. Extension ASSY.
9. Loosen front nut of rod adjusting screw and then loosen rear nut.

Downloaded from www.Manualslib.com manuals search engine

NOTE:
Since rear nut has a left-hand thread, pay attention to the rotation direction.

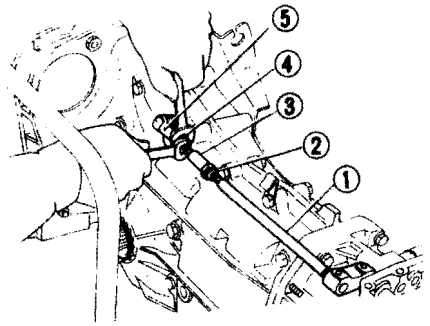

A12-328

1 High-low shifter rod
2 Nut (Left-hand threaded)
3 Rod adjusting screw
4 Nut
5 Rod ball joint assembly

Fig. 6-35

10. Disconnect high-low shifter rod from rod arm by turning rod adjust screw clockwise, and disconnect rod ball joint ASSY from high-low shifter lever CP.

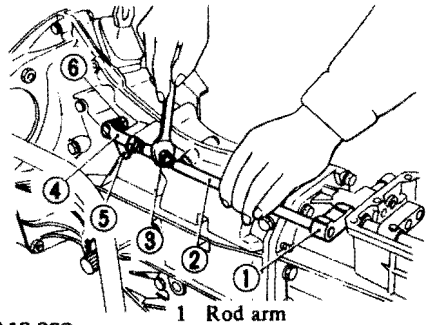

A12-329

1 Rod arm
2 High-low shifter rod
3 Rod adjust screw
4 Rod ball joint assembly
5 High-low shifter lever CP
6 Nut

Fig. 6-36

11. Rod arm with Remover II (398791600).

NOTE:
Turn high-low shifter rail so as to strike out spring pin.

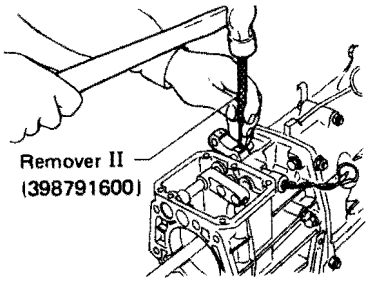

A12-330

Fig. 6-37

12. High-low shifter rail and high-low shifter arm with Remover II (398791600).

NOTE:
a. When pulling out high-low shifter rail, be careful of spring and 6.350 ball.
b. Be careful not to drop 5.56 x 10.1 plunger in high-low shifter arm.

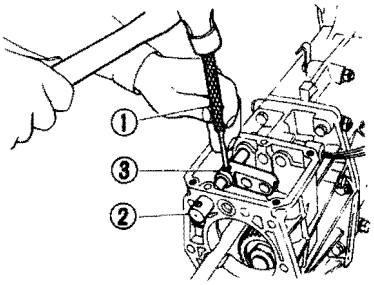

A12-331

1 Remover II (398791600)
2 High-low shifter rail
3 High-low shifter arm

Fig. 6-38

13. Lock nut-22 with Socket Wrench (499987003) while fixing transmission main shaft with Stopper (498787000).

NOTE:
a. Before turning lock nut, be sure to release the staked part of the nut.
b. Shift the gear to "1st" position to prevent the shaft from turning.

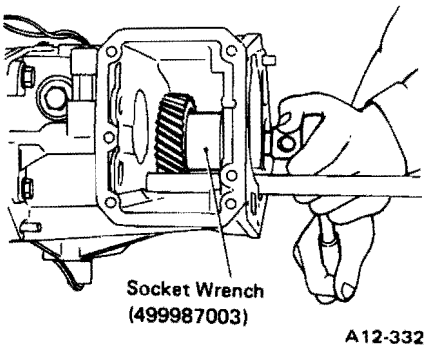

A12-332

Fig. 6-39

14. Transfer drive gear after pulling out transfer case by approx. 10 mm (0.39 in) by tapping it with a plastic hammer.

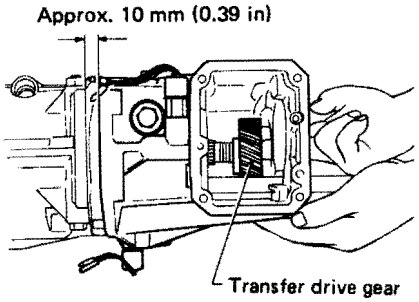

A12-333

Fig. 6-40

15. Transfer case unit and main shaft rear plate by tapping it with a plastic hammer.

3) Other than 4WD & 4WD Dual-range

Transmission rear case and main shaft rear plate.

4) Ball bearing attaching bolts at the drive pinion rear portion.

5) 4WD Dual-range

Input shaft holder attaching bolts.

6) Clean spline portion of axle drive shaft on both right and left sides with white gasoline, and then wrap vinyl tape around the spline portions. Cover sufficient area from the root of oil seal to the shaft end.

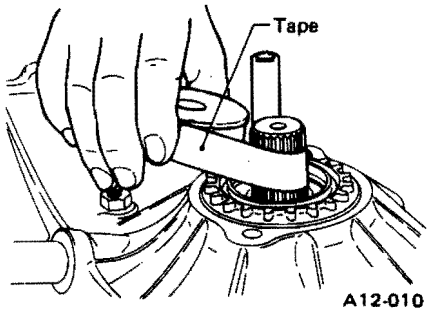

A12-010

Fig. 6-41

7) Separate transmission main case into the right half and left half.

NOTE:
Perform job with nut side facing upward.

Downloaded from www.Manualslib.com manuals search engine

8) 4WD Dual-range

High-low shifter lever CP with Remover II (398791700).

NOTE:

Pay special attention to oil seal in transmission main case (L.H.).

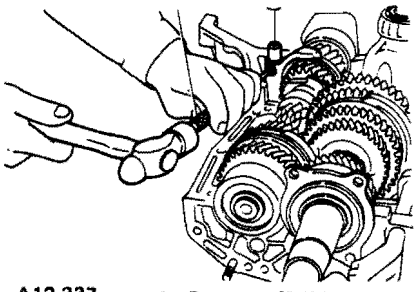

A12-337

1 Remover II (398791700)
2 High-low shifter lever CP.

Fig. 6-42

9) 4WD Dual-range

High-low shifter fork by turning 90°.

NOTE:

Be careful not to drop two high-low shifter pieces.

10) Drive pinion.

NOTE:

Job will be facilitated if the shank of a hammer is used.

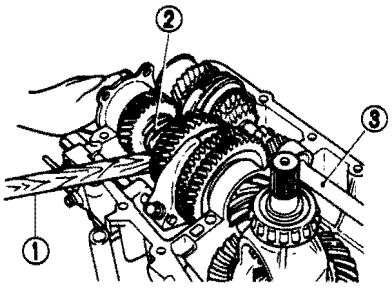

1 Hammer
2 Drive pinion
3 Main shaft

A12-013

Fig. 6-43

11) Transmission main shaft ASSY.

NOTE:

Be careful not to drop input shaft and main shaft as they are separable. (4WD Dual-range)

12) Differential.

NOTE:

a. Take care not to mix up R.H. and L.H. sides of roller bearing [37 x 72 x 18.25 mm].

b. Take care not to damage the axle shaft oil seal.

13) 5-speed

5th shifter fork with Remover II (398791700).

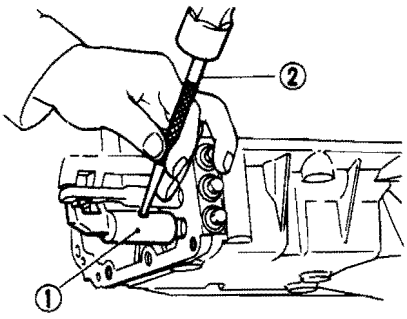

1 5th shifter fork
2 Remover II (398791700)

A12-420

Fig. 6-44

NOTE:

Pay attention to the springs and balls in the plug.

14) Shifter rail spring plugs from case.

15) Shifter forks and shifter rails for 3rd-4th and 1st-2nd.

NOTE:

a. When pulling out a rail, keep other rails placed in neutral position.

b. Pull the rail for 3rd-4th by turning 90° in order not to drop plunger.

c. The cross section of the interlocking device is as shown in the figure. When a rail is shifted, 5.56 x 10.1 plunger will move into the notched groove of other rails to prevent double engagement.

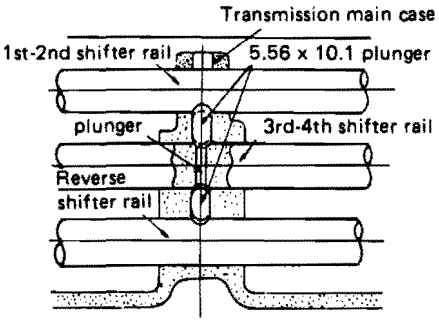

A12-018

Fig. 6-45

16) Knock pin, reverse idler gear shaft, reverse idler gear and shifter lever.

17) Other than 5-speed

Reverse shifter rail arm and reverse shifter rail.

18) 5-speed

Outer snap ring, reverse shifter rail arm, reverse shifter rail, 5.556 ball, arm spring and 5.56 x 10.1 plunger.

NOTE:

Make sure that the ball housed in arm does not pop out when taking out the reverse shifter rail arm.

19) Axle shaft oil seal holders with Wrench (399780111).

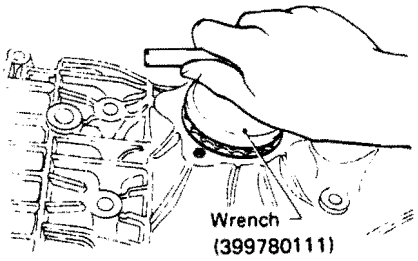

A12-020

Fig. 6-46

20) Snap ring, speedometer driven gear, shaft and washer.

NOTE:

Knock speedometer shaft outside case by tapping lightly. Oil seal will come out together.

21) 4WD Dual-range

Pull out counter gear shaft forwards until it hits on transmission main case (R.H.), and remove clip with screwdriver or the like.

22) 4WD Dual-range

Slide counter gear washer at the rear, and remove knock pin from counter gear shaft.

23) 4WD Dual-range

Counter gear shaft from main case.

NOTE:

a. Be careful not to damage O-ring.

b. Be careful not to drop knock pin at the front, counter gear and two washers.

Downloaded from www.Manualslib.com manuals search engine

24) 4WD Dual-range

Counter gear from main case (R.H.).

NOTE:

Be careful that two needle bearings and counter gear collar in counter gear do not drop.

6. Disassembly

1) Transmission Main Shaft Assembly

1) 4WD Dual-range

Separate main shaft ASSY from input shaft CP, and remove high-low synchronizer ring at this time.

NOTE:

Be careful not to drop needle bearing in input shaft.

2) Other than 4WD Dual-range

Wrap vinyl tape around the main shaft spline portions, and then pull out oil seal and needle bearing.

3) Other than 5-speed

Snap ring with Expander (899474100).

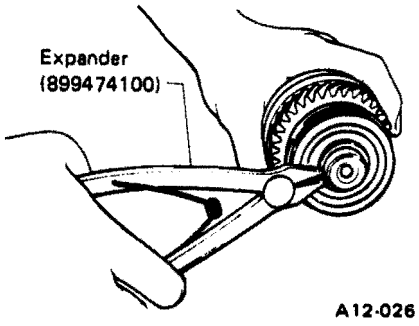

Fig. 6-47

4) 5-speed

Raise the lock nut staking portions, and then remove lock nut with Socket Wrench (899988608) and Holder (898938600).

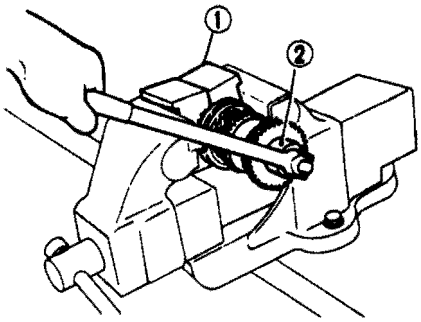

1 Holder (898938600)
2 Socket wrench (899988608)

Fig. 6-48

5) 5-speed

5th drive gear with Retainer (89971-4110) and then woodruff key.

6) Remove the following parts with Remover (899864100) and Retainer (899714110).

- Ball bearing
- 4th drive gear thrust plate
- 4th drive gear
- 4th drive gear bushing
- Synchronizer hub
- 3rd drive gear

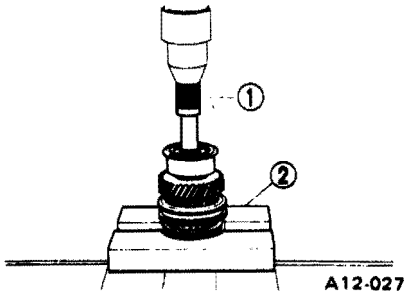

1 Remover (899864100)
2 Retainer (899714110)

Fig. 6-49

7) 3rd drive gear bushing may be left fitted, if there is no problem. But if replacement is required, cut a groove with grinder and drive it with chisel or the like. When bushing moves a little, remove it with press using Remover (899864100) and Retainer II (89985-8600).

8) 4WD Dual-range

Snap ring (Outer-22) from main shaft with Expander (899474100).

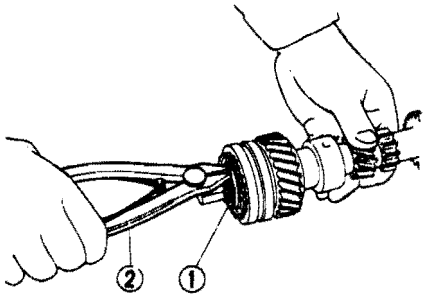

1 Snap ring
2 Expander (899474100)

Fig. 6-50

9) 4WD Dual-range

Remove the following parts by hand.

- High-low synchronizer hub
- High-low synchronizer ring
- Input low gear
- Input low gear collar
- Needle bearing (22 x 28 x 23)
- Input low gear spacer
- Ball (3.9688)
- Needle bearing (25 x 42 x 20)

2) Drive Pinion Assembly

1) Other than 4WD & 4WD Dual-range

Lock nut-22 with Socket Wrench (899984103), Holder (899884100) and bench vise.

NOTE:

a. Raise the lock nut staking portions before removing lock nut.

b. The gear should be supported after removing the lock nut, as some ball bearings are installed on the drive pinion without press-fit tightness.

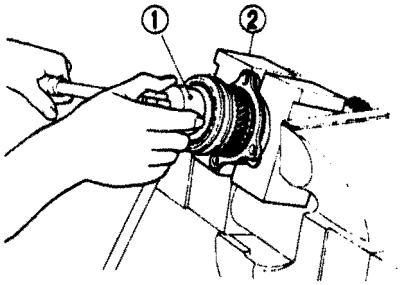

1 Socket Wrench (899984103)
2 Holder (899884100)

Fig. 6-51

Downloaded from www.Manualslib.com manuals search engine

2) 4-speed

Remove the following parts with Remover (899864100) and Retainer (899714110).

- Ball bearing
- 3rd-4th driven gear

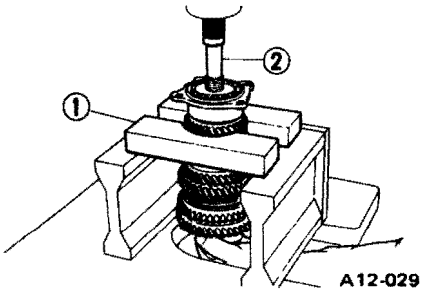

1 Retainer (899714110)
2 Remover (899864100)

Fig. 6-52

3) 5-speed

Remove the following parts.

- Insert stopper plate
- Insert guide
- Synchronizer hub
- 5th driven gear
- Needle bearing

4) 5-speed

Remove the following parts with Remover (899864100) and Retainer (899714110).

- 5th needle bearing race
- 5th driven gear thrust plate
- Ball bearing
- 3rd-4th driven gear

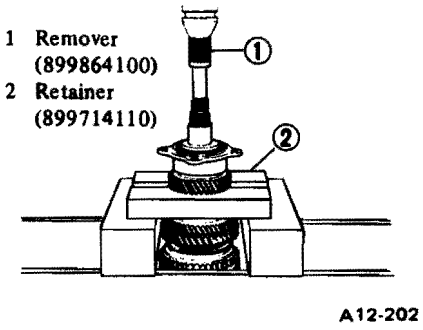

1 Remover (899864100)
2 Retainer (899714110)

Fig. 6-53

5) 4WD & 4WD Dual-range

Remove the following parts with Remover (899864100) and Retainer (899714110).

- Transfer needle bearing race
- Drive pinion collar
- Washer
- Ball bearing
- 3rd-4th driven gear

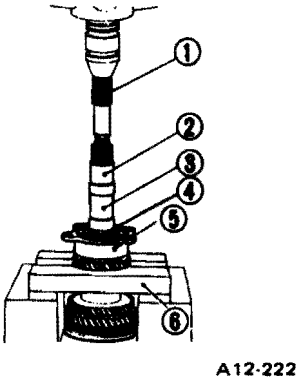

1 Remover (899864100)
2 Race
3 Collar
4 Washer
5 Ball bearing (25 x 70 x 30)
6 Retainer (899714110)

Fig. 6-54

6) 2nd driven gear and needle bearing by hand.

7) Remove the following parts with Retainer (899714110).

- 1st driven gear
- 1st-2nd needle bearing race
- 1st-2nd synchronizer hub

NOTE:
Take out key before removing needle bearing race.

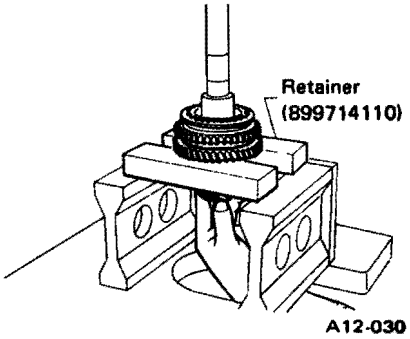

Fig. 6-55

8) Remove the following parts with Retainer II (899858600) for 1600 or Replacer (498517000) for 1800.

- 1st-2nd needle bearing race
- 1st driven gear thrust plate

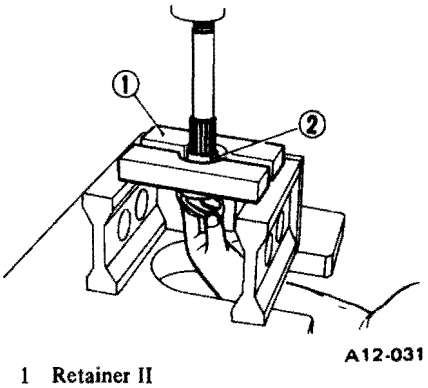

1 Retainer II (899858600)
2 Race

Fig. 6-56

3) Differential Assembly

1) R.H. and L.H. snap rings, and axle drive shafts.

NOTE:
Take care not to interchange R.H. and L.H. axle drive shafts.

2) Crown gear

1600

1. Straighten crown gear lock washer.
2. 8 bolts and crown gear.

1800

10 bolts and crown gear.

3) Drive out straight pin toward crown gear with Remover (899904-100).

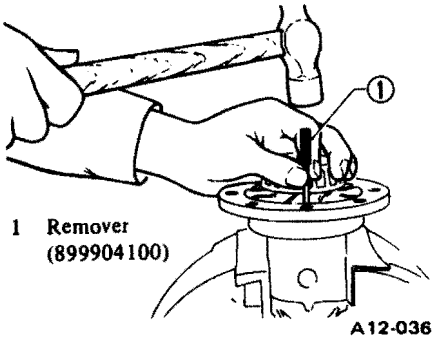

1 Remover (899904100)

Fig. 6-57

4) Differential pinion shaft, differential pinions, differential side gears and washers.

Downloaded from www.Manualslib.com manuals search engine

5) Roller bearing with Puller ASSY included in Puller Set (899524100), and Seat (399520105).

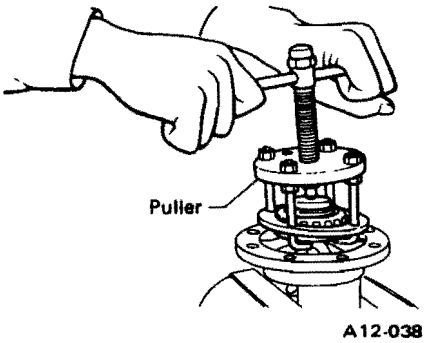

Fig. 6-58

4) Transmission Rear Case Assembly
(Other than 4WD & 4WD Dual-range)

1) Fillers, gaskets, springs and balls.

NOTE:
There is no spring and ball in the lower filler hole for 4-speed.

2) Plug, gasket, reverse accent shaft and reverse return spring.
3) Back-up light switch.

5) Transfer Case Assembly
(4WD & 4WD Dual-range)

1) Shifter arm.
2) Filler, gasket, reverse accent spring and ball.
3) Plug, gasket, reverse accent shaft and spring.
4) Snap ring with screwdriver or the like.
5) Strike out needle bearing with an aluminum rod.
6) Back-up light switch.

6) Extension Assembly
(4WD & 4WD Dual-range)

1) Snap ring (inner 72) from extension with screwdriver or the like.
2) Punch out rear drive shaft with a hammer and an aluminum rod.

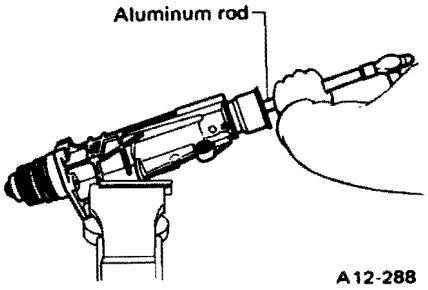

Fig. 6-59

3) Lock nut-18 with Holder (89988-4100) and Socket Wrench (89998-8608).

NOTE:
a. Raise the staked portion before rotating the lock nut.
b. Shift sleeve into drive position.

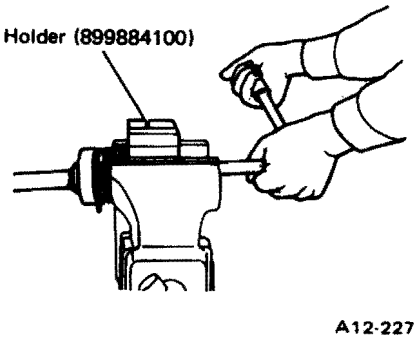

Fig. 6-60

4) Remove the following parts with Remover (899864100) and Retainer (899714110).
- Ball bearing
- Thrust plate
- Transfer driven gear
- Bushing
- Sleeve and hub
- Spacer
- Ball bearing

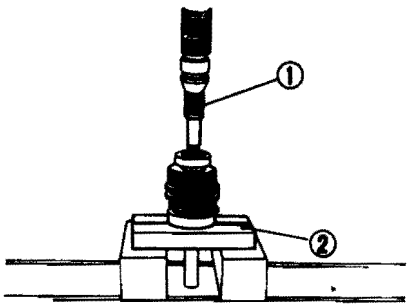

1 Remover (899864100)
2 Retainer (899714110)

Fig. 6-61

7) Input Shaft Complete
(4WD Dual-range)

1) Oil guide and input shaft holder shim.

NOTE:
The quantity of selective shim is 0 to 2 sheets.

2) Wind vinyl tape on the spline of input shaft.
3) Snap ring (IN-56) with Pliers (398663600).

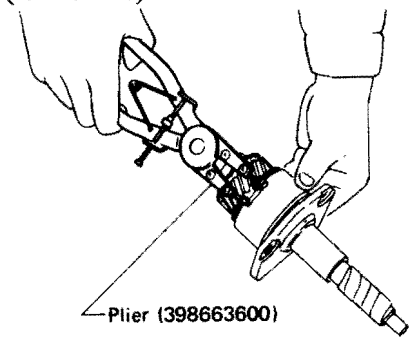

Fig. 6-62

4) Take out input shaft by tapping the shaft end with plastic hammer, while holding input shaft holder.

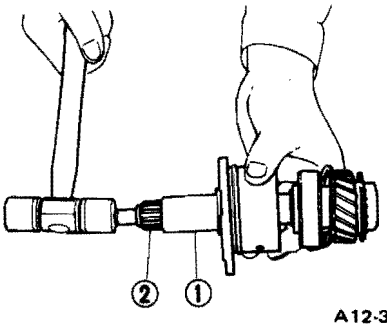

1 Input shaft holder
2 Input shaft

Fig. 6-63

5) Snap ring (Outer), input shaft retainer and input shaft cotter.
6) Ball bearing with Remover II (899858600).

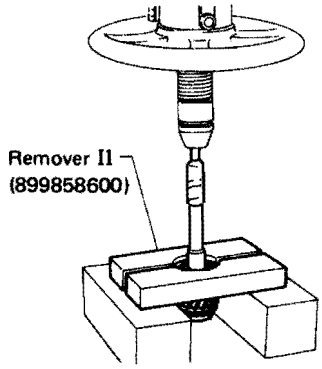

Fig. 6-64

Downloaded from www.Manualslib.com manuals search engine

7. Inspection

Disassembled parts should be thoroughly washed and carefully checked.

No.	Parts	Inspection	Corrective action
1	Bearing	(1) Broken, damaged or rusted ball, outer race or cage.	Replace.
		(2) Excessively worn bearing at any part.	Replace.
		(3) Lubricate bearings with gear oil and rotate. Rotation is not smooth or unusual noise develops. **NOTE:** **Ball bearing for drive pinion rear (1600: 25 x 70 x 30, 1800: 27 x 70 x 35) should be checked to see if it rotates smoothly before disassembling drive pinion. Since preload is applied to this bearing, its rotation may be felt to be a little heavier than other bearings.**	Replace.
		(4) Any other problems.	Replace.
2	Gear	(1) Break, damage or excessive wear on tooth surface.	Replace.
		(2) Rough or damaged cone that mates with synchronizer ring.	Correct or replace.
		(3) Damaged inner or end surface of gear.	Correct or replace.
3	Synchronizer ring	(1) The contacting surface (three grooves) with synchronizer hub insert is worn into steps or unusually worn.	Replace.
		(2) The clearance shown in the figure is extremely small when ring is forced against the gear cone. 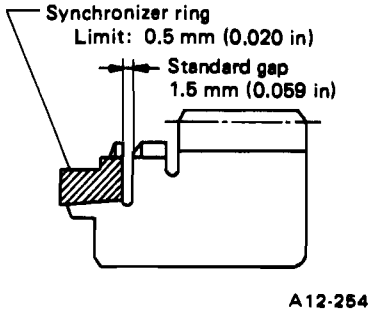 *Fig. 6-65*	Replace.

Downloaded from www.Manualslib.com manuals search engine

No.	Parts	Inspection	Corrective action
		(3) Damaged inner surface or tooth surface.	Replace.
		(4) Unusual wear or uneven wear on ring inner surface.	Replace.
4	Synchronizer hub and insert	(1) Excessive wear into steps on hub spline or excessive wear on hub end face.	Replace.
		(2) Deformed or excessive worn hub inserts.	Replace.
		(3) Any other problems.	Replace.
5	Bushing and race	(1) Damage or unusual wear on sliding part.	Replace.
		(2) Unusual wear on the inner face.	Replace.
6	Oil seal	(1) Damage, hardening and excessive wear on the lip.	Replace.
		(2) Any other problems.	Replace.
7	O-ring	(1) Deformation, hardening, damage or excessive wear on seal surface.	Replace.
		(2) Any other problems.	Replace.
8	Gear shift mechanism	(1) Damage, excessive wear or bend.	Correct or replace.
		(2) Any other problems.	Correct or replace.
9	Differential gear	(1) Damaged, excessively worn or seized tooth surfaces of crown gear and drive pinion.	Replace.
		(2) Excessively worn or damaged roller bearing contact surface of drive pinion.	Replace.
		(3) Damaged, worn or seized differential pinion, side gear, washer (35.1 x 45 x t), differential pinion shaft and straight pin.	Correct or replace.
		(4) Cracked, worn or damaged differential case.	Correct or replace.
		(5) Excessively worn or damaged axle drive shaft journals contacting the differential case.	Correct or replace.

Downloaded from www.Manualslib.com manuals search engine

No.	Parts	Inspection	Corrective action
10	Rear extension bushing	Excessive wear or considerable scratches.	Replace. **NOTE:** **a. When pulling out the bushing, cut it with a hacksaw blade and pull it out from the front to the rear.** **b. When press-fitting a new bushing into extension, the groove on extension and the oil hole of the bushing should be aligned correctly.** **c. After the bushing has been replaced, finish the inner surface of bushing with a reamer to conform with the outside diameter of the end yoke of propeller shaft if necessary.** Inner dia. of finished bushing hole mm (in): 35.000 – 35.039 (1.3780 – 1.3795) Used reamer size (for reference) mm (in): 35.009 – 35.020 (1.3783 – 1.3787)

8. Assembly

NOTE:
Gaskets should be replaced with new ones.

1) Transmission Main Shaft Assembly

NOTE:
a. Before assembling main shaft, apply transmission oil to needle bearing, ball bearing and bushings sufficiently.
b. Pay attention to the assembling direction of bushing.

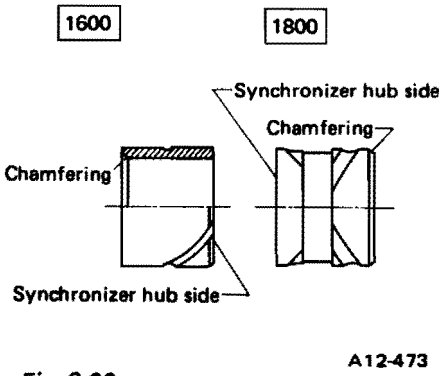

Fig. 6-66

1) Install 3rd drive gear bushing with the following special tools.

4-speed
- Installer (899580100)
- Remover (899714110)

5-speed
- Installer (899580100)
- Installer (899874100)
- Remover (899714110)

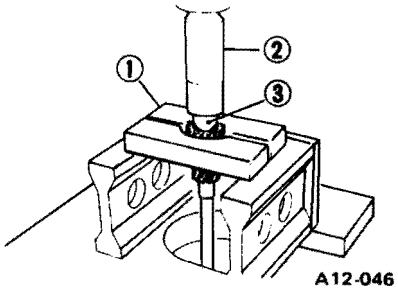

1 Retainer (899714110)
2 Installer (899580100)
3 Bushing

Fig. 6-67

2) Install three synchronizer inserts, synchronizer sleeve and two synchronizer springs on synchronizer hub in advance.

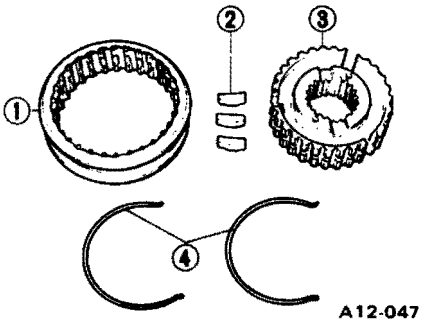

1 Sleeve (Synchronizer)
2 Insert (Synchronizer)
3 Hub (Synchronizer)
4 Spring (Synchronizer hub)

Fig. 6-68

NOTE:
Install springs on both sides so that relative positions of cut ends are 120° apart.

3) Install 3rd drive gear and synchronizer rings and hub which were subassembled in 2).

NOTE:
a. If the hub cannot be inserted by hand, use a press to install. Take care so that the insert is in line with the synchronizer ring groove.

Downloaded from www.Manualslib.com manuals search engine

b. Be sure to use 3rd drive gear having discrimination groove on its tooth surface.

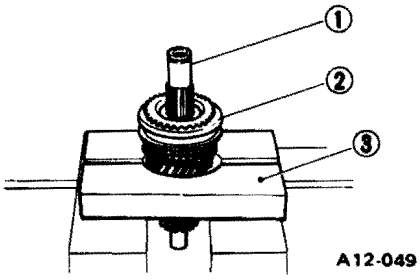

1 Main shaft
2 Synchronizer hub
3 Retainer (899714110)

Fig. 6-69

NOTE:
Pay attention to the assembling direction of bushing.

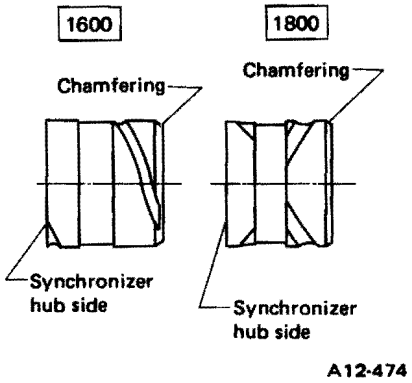

Fig. 6-70

4) Install 4th drive gear bushing with Retainer (899714110) and Installer (899874100).

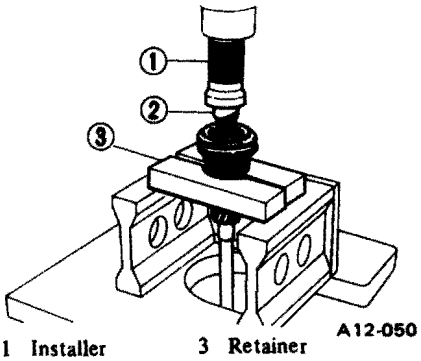

1 Installer (899874100)
2 Bushing
3 Retainer (899714110)

Fig. 6-71

5) Install 4th drive gear and 4th drive gear thrust plate.

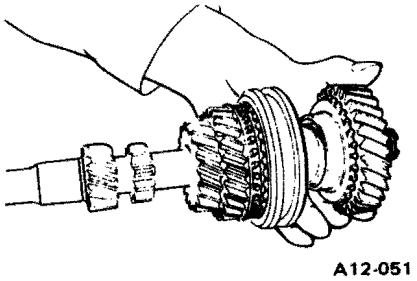

Fig. 6-72

NOTE:
a. Pay attention to the assembling direction.

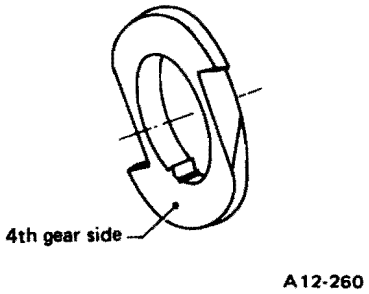

Fig. 6-73

b. Be sure to use 4th drive gear having discrimination groove on its tooth surface.

6) Install ball bearing with the following special tools.

1600
- Remover (899714110)
- Press ASSY (899754110)

1800
- Remover (899714110)
- Installer (899874100)

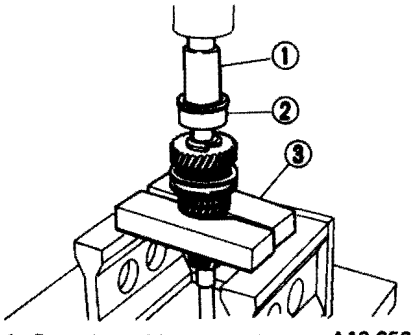

1 Press Assembly (899754110)
2 Bearing
3 Retainer (899714110)

Fig. 6-74

7) Other than 5-speed

Assemble snap ring with Press ASSY (899754110).

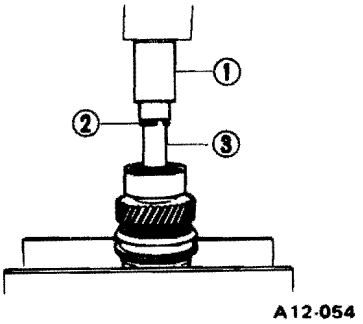

1 Press
2 Snap ring
3 Guide

Fig. 6-75

NOTE:
a. When reassembling a snap ring, always replace it with a new one.
b. Select a suitable snap ring from the following table so that the play in the axial direction is 0 to 0.05 mm (0 to 0.0020 in).

Part No.	Thickness mm (in)
805022010	2.45 (0.0965)
805022011	2.48 (0.0976)
805022012	2.51 (0.0988)
805022013	2.54 (0.1000)
805022014	2.57 (0.1012)
805022015	2.60 (0.1024)
805022016	2.63 (0.1035)
805022017	2.66 (0.1047)
805022018	2.69 (0.1059)
805022019	2.85 (0.1122)
805022030	2.42 (0.0953)
805022031	2.39 (0.0941)

Downloaded from www.Manualslib.com manuals search engine

8) 5-speed

Assemble woodruff key and then 5th drive gear with Retainer (899714110) and Press (899754110).

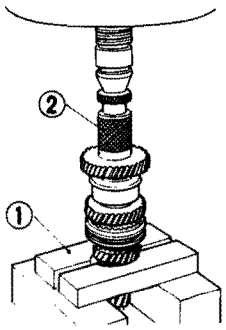

A12-475

1 Retainer (899714110)
2 Press (899754110)

Fig. 6-76

NOTE:
When assembling key, pay attention to the groove.

9) 5-speed

Tighten lock nut-18 with Socket Wrench (899988608) and Holder (898938600).

Torque	73 – 84 N·m (7.4 – 8.6 kg-m, 54 – 62 ft-lb)

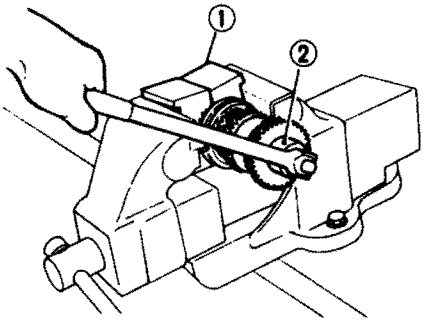

A12-145

1 Holder (898938600)
2 Socket wrench (899988608)

Fig. 6-77

NOTE:
After tightening the lock nut, stake it.

10) 4WD Dual-range

Install three high-low synchronizer inserts, sleeve and two springs on synchronizer hub.

NOTE:
a. Install springs so that the relative positions of cut ends are 120° apart.
b. Pay attention to the assembling direction of hub.

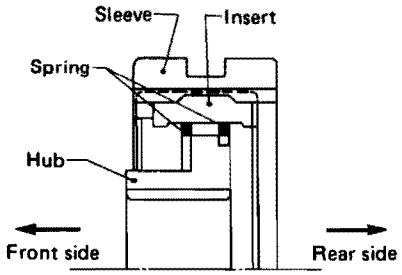

A12-476

Fig. 6-78

11) 4WD Dual-range

Install the following parts onto transmission main shaft.

1 Needle bearing (25 x 42 x 20)
2 Ball (3.9688)
3 Input low gear spacer
4 Needle bearing (22 x 28 x 23)
5 Input low gear collar
6 Input low gear
7 High-low synchronizer ring
8 High-low synchronizer hub sub-assembled in 10).

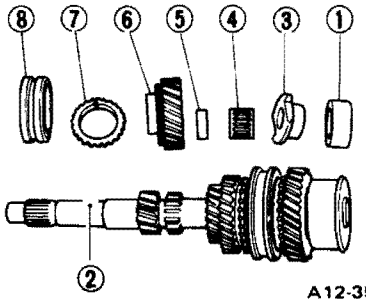

A12-352

Fig. 6-79

NOTE:
a. Be careful not to hit needle bearing on the stepped portion of main shaft.
b. When installing high-low synchronizer ring, align the ring groove and insert.

12) 4WD Dual-range

Install snap ring (Outer-22) onto main shaft with Guide (499257000) and Press (899754112) included in Press ASSY (899754110).

NOTE:
a. When assembling a snap ring, always replace it with a new one.
b. Select a suitable snap ring from the following table so that the play in the axial direction is 0.060 to 0.100 mm (0.0024 to 0.0039 in).

Part No.	Thickness mm (in)
805022010	2.45 (0.0965)
805022011	2.48 (0.0976)
805022012	2.51 (0.0988)
805022013	2.54 (0.1000)
805022014	2.57 (0.1012)
805022015	2.60 (0.1024)
805022016	2.63 (0.1035)
805022017	2.66 (0.1047)
805022018	2.69 (0.1059)
805022019	2.85 (0.1122)
805022030	2.42 (0.0953)
805022031	2.39 (0.0941)

c. If input low gear rotates heavily, tap the gear end surface forward with a plastic hammer, and make sure to rotate lightly by means of proper side clearance.

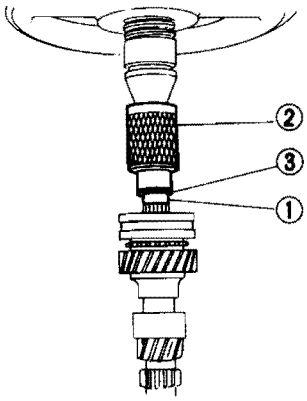

A12-353

1 Guide (499257000)
2 Press (899754112)
3 Snap ring (Outer-22)

Fig. 6-80

Downloaded from www.Manualslib.com manuals search engine

2) Drive Pinion Assembly

1) Fit roller bearing in drive pinion. Install 1st driven gear thrust plate with Installer (499277000) and Installer (899580100).

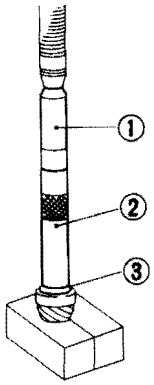

1 Installer (899580100)
2 Installer (499277000)
3 1st driven gear thrust plate

A12-453

Fig. 6-81

NOTE:
Installer (899874100) and Installer (899278600) are available instead of Installer (499277000).

2) Install 1st-2nd needle bearing race with Installer (499277000) and Installer (899580100).

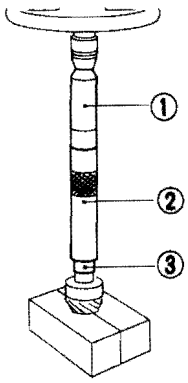

1 Installer (899580100)
2 Installer (499277000)
3 1st-2nd needle bearing race

A12-454

Fig. 6-82

3) Install three 1st-2nd synchronizer inserts, reverse driven gear and two springs on 1st-2nd synchronizer hub.

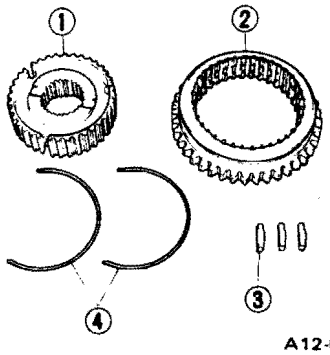

A12-056

1 1st-2nd synchronizer hub
2 Reverse driven gear
3 1st-2nd synchronizer insert
4 1st 2nd synchronizer spring

Fig. 6-83

NOTE:
a. Install the springs so that the relative positions of cut ends are 120° apart.
b. Pay attention to the 1st-2nd synchronizer hub assembling direction.

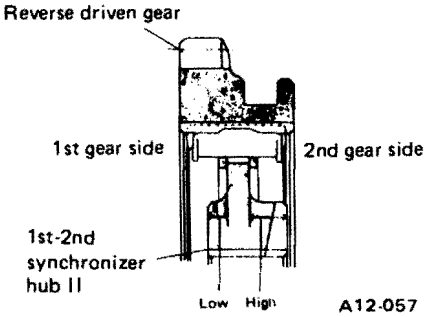

A12-057

Fig. 6-84

4) Install needle bearing, 1st driven gear, 1st-2nd synchronizer rings and 1st-2nd synchronizer hub subassembled in 3).

NOTE:
a. If 1st-2nd synchronizer hub cannot be installed by hand, use a press to install.
b. Take care so that 1st-2nd synchronizer ring groove is in line with the insert.
c. Be sure to use 1st driven gear having discrimination groove on its hollowed surface.

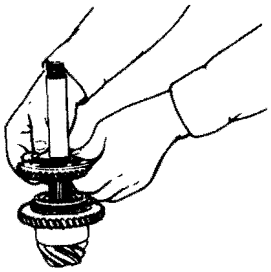

Fig. 6-85

A12-059

5) Install 1st-2nd needle bearing race with Installer (499277000) and Installer (899580100).

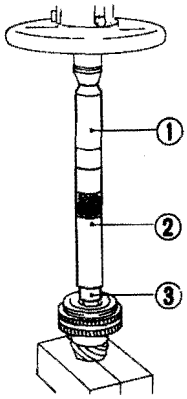

A12-455

1 Installer (899580100)
2 Installer (499277000)
3 1st-2nd needle bearing race

Fig. 6-86

6) Install needle bearing, 2nd driven gear and inner key into the groove on drive pinion.

NOTE:
Be sure to use 2nd driven gear having discrimination groove on its hollowed surface.

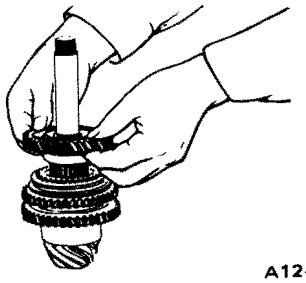

A12-061

Fig. 6-87

7) Install 3rd-4th driven gear with Installer (899580100).

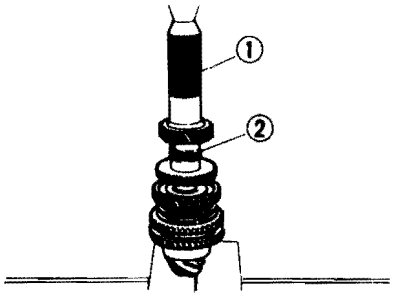

A12-062

1 Installer (899580100)
2 4th 3rd driven gear

Fig. 6-88

Downloaded from www.Manualslib.com manuals search engine

8) Install ball bearing with the following special tools.

4-speed • Installer (899580100)
5-speed • Installer (899580100)
• Installer (899874100)

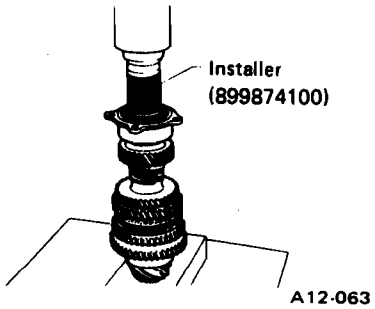

Fig. 6-89

NOTE:
Some ball bearings may be installed in the drive pinion without press tightness, but it causes no problem in practical operation.

9) 4-speed
Install lock washer-22, and tighten lock nut with Socket Wrench (89998-4103) and Holder (899884100).

Torque	78 N·m (8 kg-m, 58 ft-lb)

NOTE:
Stake the lock nut at two portions to prevent it from getting loose.

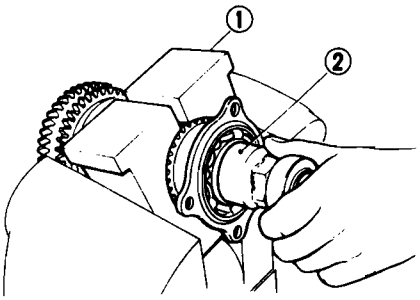

1 Holder (4th/3rd driven gear) (899884100)
2 Socket wrench (899984103)

Fig. 6-90

10) 5-speed
Install 5th driven gear thrust plate and then, install 5th needle bearing race with Installer (899874100).

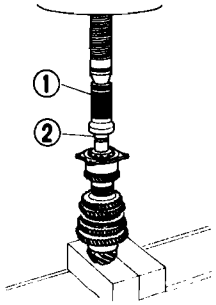

1 Installer (899874100)
2 5th needle bearing race

Fig. 6-91

11) 5-speed
Install needle bearing, 5th driven gear, synchronizer hub, insert guide, insert stopper plate, lock washer-22 and lock nut-22.

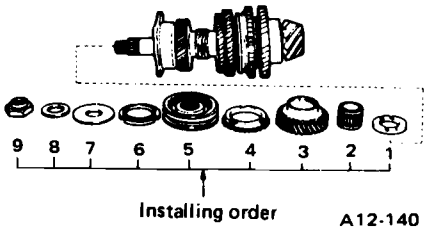

Fig. 6-92

NOTE:
Pay attention to the synchronizer hub assembling direction.

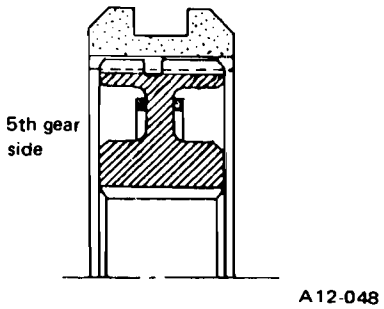

Fig. 6-93

12) 5-speed
Tighten lock nut-22 with Socket Wrench (899984103) and Holder (899884100).

Torque	73 – 84 N·m (7.4 – 8.6 kg-m, 54 – 62 ft-lb)

NOTE:
Stake the lock nut at 2 points.

13) 4WD & 4WD Dual-range
Install washer, drive pinion collar, transfer needle bearing race and transfer drive gear to drive pinion with Installer (899580100).

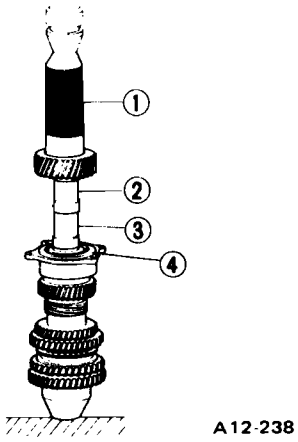

1 Installer (899580100)
2 Race
3 Collar
4 Washer

Fig. 6-94

14) 4WD & 4WD Dual-range
Tighten lock nut-22 with lock washer-22 temporarily.

NOTE:
Be sure not to stake the nut at this time.

Downloaded from www.Manualslib.com manuals search engine

3) Differential Assembly

1) Install differential side gears and differential pinions together with washers (35.1 x 45 x t mm) on differential case, and then insert differential pinion shaft.

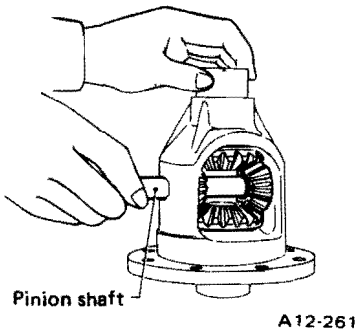

Fig. 6-95

2) Measure backlash between gear and pinion with Magnet Base (49824-7001) and Dial Gauge (498247100).
If the backlash is inappropriate, make adjustment by using proper washers.

Unit: mm (in)

Standard backlash	1600	0.05 – 0.15 (0.0020 – 0.0059)
	1800	0.13 – 0.18 (0.0051 – 0.0071)

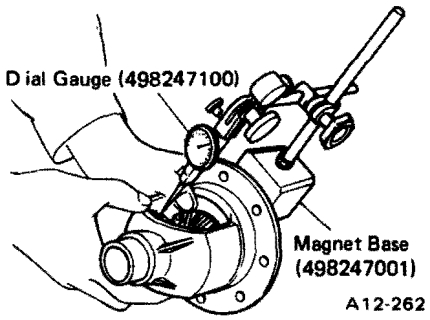

Fig. 6-96

Washers (35.1 x 45 x t mm)	
Part No.	Thickness mm (in)
803135011	0.925 – 0.950 (0.0364 – 0.0374)
803135012	0.950 – 0.975 (0.0374 – 0.0384)
803135013	0.975 – 1.000 (0.0384 – 0.0394)
803135014	1.000 – 1.025 (0.0394 – 0.0404)
803135015	1.025 – 1.050 (0.0404 – 0.0413)

3) Align the differential pinion shaft hole with the holes on differential case and drive straight pin (4 x 44 mm) by tapping lightly with hammer from the crown gear side. Finally drive pin until it falls in about 1 mm (0.04 in) with Remover (899904100).

NOTE:
Stake the hole portion after driving it into the differential case.

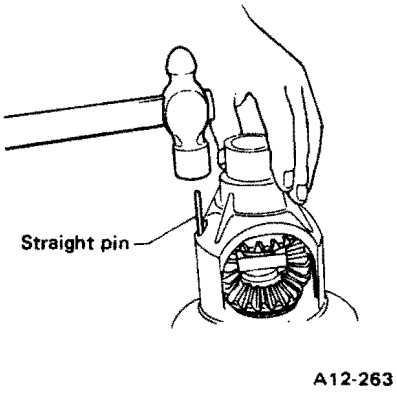

Fig. 6-97

4) Install bearing cone on differential case with Installer (399790110) and Seat (399520105).

NOTE:
Notice that the cups of roller bearings are provided as a set.

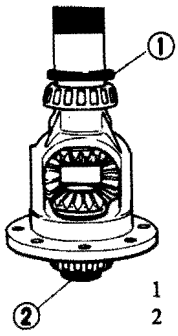

Fig. 6-98

5) Install crown gear on case.

1600

Install crown gear with lock washers.

Torque	57 – 67 N·m (5.8 – 6.8 kg-m, 42 – 49 ft-lb)

NOTE:
a. Replace lock washers with new ones.
b. Bend lock washers to prevent bolts from working loose after tightening bolts.

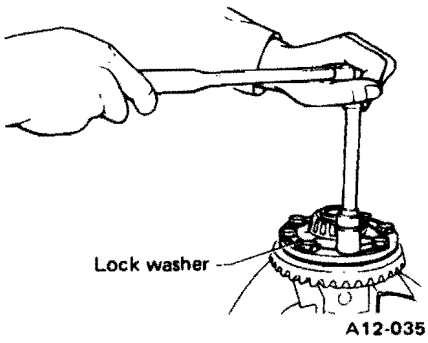

Fig. 6-99

1800

Install crown gear.

Torque	57 – 67 N·m (5.8 – 6.8 kg-m, 42 – 49 ft-lb)

6) Install axle drive shafts and lock it with snap rings. Select proper snap ring so that the clearance between differential pinion shaft and tip of axle drive shaft is within the specified range.

Downloaded from www.Manualslib.com manuals search engine

Standard clearance	0 – 0.2 mm (0 – 0.008 in)

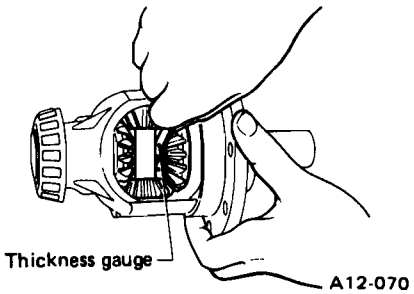

Fig. 6-100

Outer snap ring	
Part No.	Thickness mm (in)
805026010	1.00 – 1.10 (0.0394 – 0.0433)
031526000	1.15 – 1.25 (0.0453 – 0.0492)

4) Transmission Rear Case Assembly

(**Other than 4WD & 4WD Dual-range**)

1) Install back-up light switch with aluminum gasket and tighten it.

Torque	16 – 20 N·m (1.6 – 2.0 kg-m, 12 – 14 ft-lb)

2) Fit reverse return spring and reverse accent shaft and then tighten plug with aluminum adjusting gasket.

Torque	31 – 37 N·m (3.2 – 3.8 kg-m, 23 – 27 ft-lb)

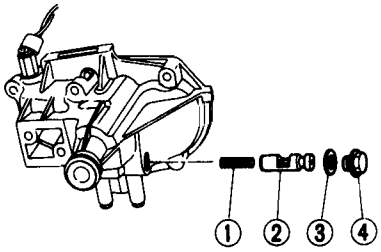

1 Spring
2 Reverse accent shaft
3 Gasket
4 Plug

A12-253

Fig. 6-101

3) Fit 7.144 balls and reverse accent springs and then tighten fillers with gaskets.

Torque	9 – 11 N·m (0.9 – 1.1 kg-m, 6.5 – 8.0 ft-lb)

NOTE:

a. Make certain that the upper spring is yellow and lower one is red.

b. There is no spring and ball in the lower filler hole for 4-speed.

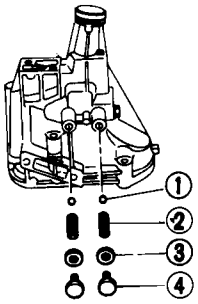

1 Ball
2 Spring
3 Gasket
4 Filler

A12-251

Fig. 6-102

5) Transfer Case Assembly

(**4WD & 4WD Dual-range**)

1) Install needle bearing into transfer case with Press ASSY (899754110), and fit snap ring with your fingers.

NOTE:

When installing the needle bearing, put a jig on the side with the stamped marking.

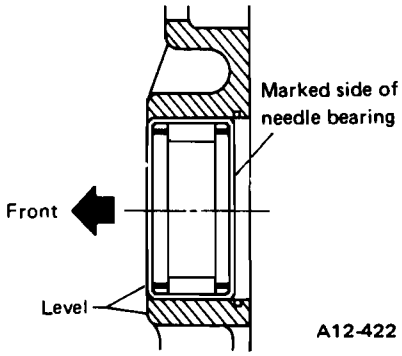

Fig. 6-103

2) Install the following parts.

- Reverse return spring
- Reverse accent shaft
- Aluminum gasket
- Plug

Torque	31 – 37 N·m (3.2 – 3.8 kg-m, 23 – 27 ft-lb)

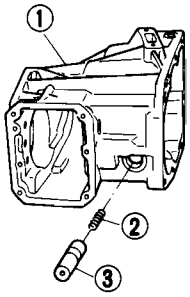

1 Transfer case
2 Reverse return spring
3 Reverse accent shaft

A12-478

Fig. 6-104

3) Install the following parts.

- 7.144 ball
- Reverse accent spring
- Aluminum gasket
- Filler

Torque	9 – 11 N·m (0.9 – 1.1 kg-m, 6.5 – 8.0 ft-lb)

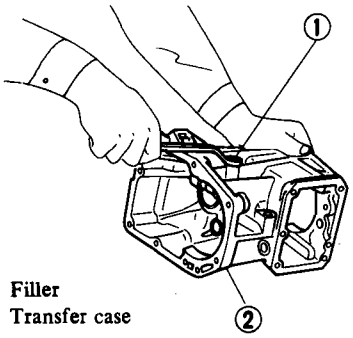

1 Filler
2 Transfer case

Fig. 6-105

A12-479

Downloaded from www.Manualslib.com manuals search engine

4) Install back-up light switch with aluminum gasket.

Torque	16 – 20 N·m (1.6 – 2.0 kg-m, 12 – 14 ft-lb)

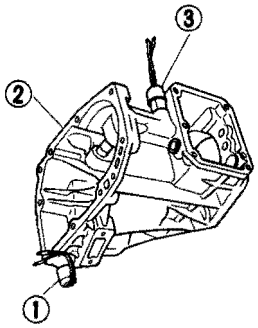

A12-480

1 Back-up light switch
2 Transfer case
3 Switch for 4WD indicator light

Fig. 6-106

5) Install oil seal on transfer case.

NOTE:
Be sure that oil seal does not protrude from the case end surface.

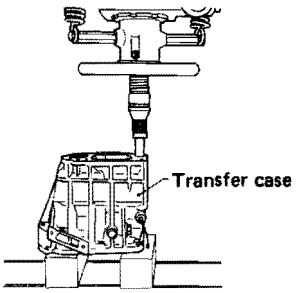

A12-481

Fig. 6-107

6) Extension Assembly (4WD & 4WD Dual-range)

1) Install ball bearing onto rear drive shaft with Installer (899580100) and Retainer (899714110).

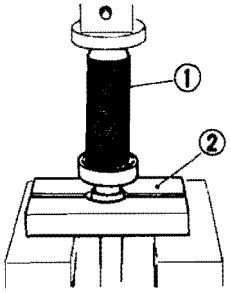

1 Installer (899580100)
2 Retainer (899714110)

A12-163

Fig. 6-108

2) Hammer rear drive shaft into extension with a plastic hammer.

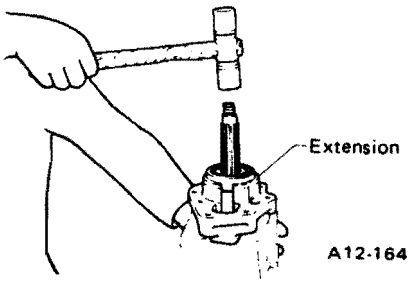

A12-164

Fig. 6-109

3) Fit snap ring to the groove inside of extension.
4) Install rear drive spacer, synchronizer hub and sleeve onto rear drive shaft.

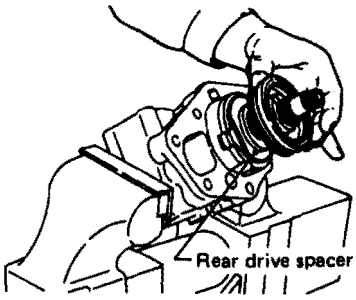

A12-229

Fig. 6-110

5) Install transfer driven gear bushing onto rear drive shaft with Installer (899874100) and Stand (398405200).

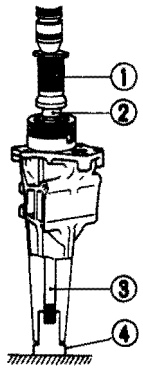

1 Installer (899874100)
2 Bushing
3 Rear drive shaft
4 Stand (398405200)

A12-241

Fig. 6-111

6) Install transfer driven gear and thrust plate onto rear drive shaft.
7) Install ball bearing onto rear drive shaft with Press ASSY (899754110) and Stand (398405200).

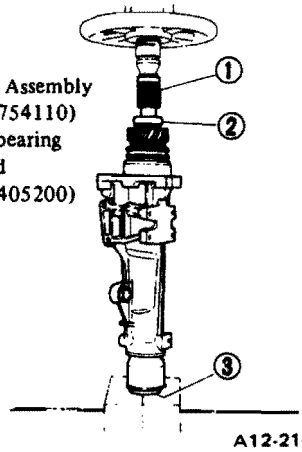

1 Press Assembly (899754110)
2 Ball bearing
3 Stand (398405200)

A12-210

Fig. 6-112

8) Shift sleeve to the drive position and tighten lock nut-18 with Holder (899884100) and Socket Wrench (899988608).

Torque	73 – 84 N·m (7.4 – 8.6 kg-m, 54 – 62 ft-lb)

NOTE:
Stake the lock nut at four positions after tightening.

Downloaded from www.Manualslib.com manuals search engine

7) Input Shaft Complete (4WD Dual-range)

NOTE:
Before pressing, insert snap ring (Inner-56) between input shaft gear and ball bearing.

1) Install ball bearing onto input shaft with Installer (899580100) and Press (899754112) included in Press ASSY (899754110).

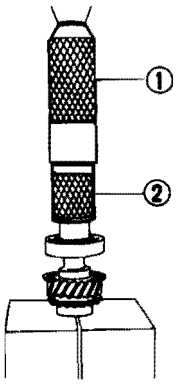

A12-354
1 Installer (899580100)
2 Press (899754112)

Fig. 6-113

2) Install input shaft cotter, input shaft retainer and snap ring (Outer) onto input shaft.

NOTE:
Select a suitable cotter from the following table so that the play in the axial direction is 0 to 0.08 mm (0 to 0.0031 in).

Part No.	Thickness mm (in)
447257000	2.43 (0.0957)
447257001	2.51 (0.0988)
447257002	2.59 (0.1020)

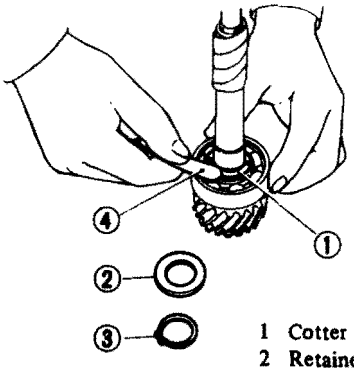

A12-355
1 Cotter
2 Retainer
3 Snap ring (Outer)
4 Thickness gauge

Fig. 6-114

3) Install oil seal into input shaft holder with Dummy Collar (39850-7703).

NOTE:
Apply grease onto the lip portion.

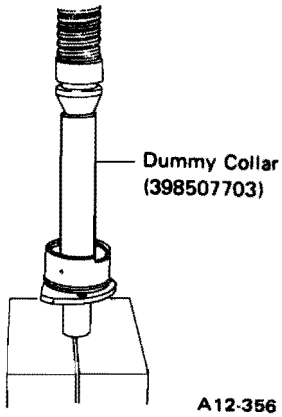

A12-356

Fig. 6-115

4) Install input shaft into holder by tapping it lightly by hand.

NOTE:
Wind vinyl tape on the spline portion of input shaft.

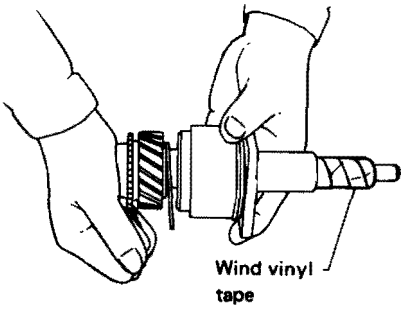

A12-357

Fig. 6-116

5) Install snap ring (Inner-56) into holder with Pliers (398663600).

NOTE:
Select a suitable snap ring from the following table so that the play in the axial direction is 0 to 0.08 mm (0 to 0.0031 in).

Part No.	Thickness mm (in)
805156020	1.75 (0.0689)
805156021	1.83 (0.0720)
805156022	1.91 (0.0752)

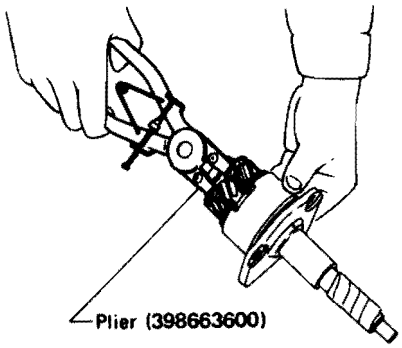

A12-348

Fig. 6-117

6) Install O-ring and oil guide onto input shaft holder.

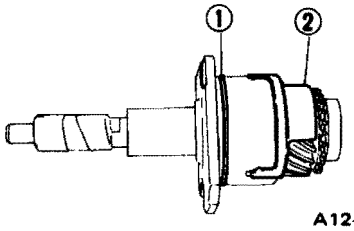

A12-358
1 O-ring (55.7 x 2.4)
2 Oil guide

Fig. 6-118

9. Installation

1) Matchmarks on Drive Pinion and Crown Gear, and Proper Values for Shims and Backlash

Drive pinion

The lower figure is the match number for combining it with crown gear.
The upper figure is for shim adjustment.

NOTE:
If no upper figure is shown, the value is zero.

Crown gear

The first figure indicates a number for combination with drive pinion.
The following figure indicates a value of appropriate backlash.

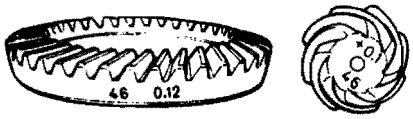

Fig. 6-119

A12-413

Downloaded from www.Manualslib.com manuals search engine

2) Adjustment of Drive Pinion Shim

1) Place drive pinion on transmission main case (R.H.) without shim and tighten drive pinion.

Torque	26 – 32 N·m (2.7 – 3.3 kg-m, 20 – 24 ft-lb)

2) Inspection and adjustment of Gauge ASSY (1600: 899914100, 1800: 499917100).

a. Loosen the two bolts and adjust so that the scale indicates 0.5 correctly when the plate end and the scale end are on the same level.

b. Tighten two bolts.

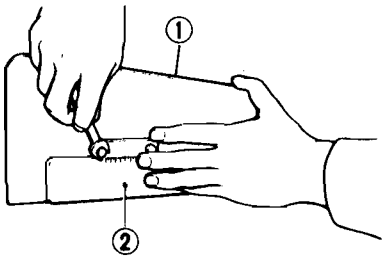

A12-073

1 Plate
2 Scale

Fig. 6-120

3) Position the gauge by inserting the knock pin of gauge into the knock hole in the transmission case.

4) Slide the drive pinion gauge scale with finger tip and read the value at the point where it matches with the end face of drive pinion.

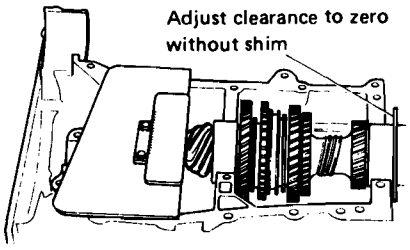

A12-074

Fig. 6-121

5) The thickness of shim shall be determined by adding the value indicated on drive pinion to the value indicated on the gauge. (Add if the figure on drive pinion is prefixed by + and subtract if the figure is prefixed by –.)

Select one to three shims from the next table for the value determined as described above and take a shim thickness which is closest to the said value.

Drive pinion shim 1600

Part No.	Thickness mm (in)
841968601	0.15 (0.0059)
841968606	0.175 (0.0069)
841968602	0.20 (0.0079)
841968607	0.225 (0.0089)
841968603	0.25 (0.0098)
841968608	0.275 (0.0108)
841968604	0.30 (0.0118)
841968605	0.50 (0.0197)

Drive pinion shim 1800

Part No.	Thickness mm (in)
441967101	0.15 (0.0059)
441967102	0.175 (0.0069)
441967103	0.20 (0.0079)
441967104	0.225 (0.0089)
441967105	0.25 (0.0098)
441967106	0.275 (0.0108)
441967107	0.30 (0.0118)
441967108	0.50 (0.0197)

Example
0.45 + 0.1 = 0.55
Where
0.45 = Value measured by the scale
+0.1 = Value on the drive pinion

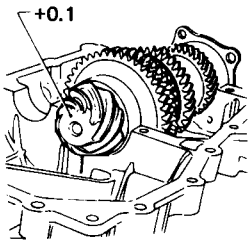

A12-075

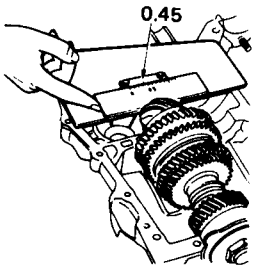

A12-076

Fig. 6-122

Downloaded from www.Manualslib.com manuals search engine

3) Adjustment of Input Shaft Holder Shim (4WD Dual-range)

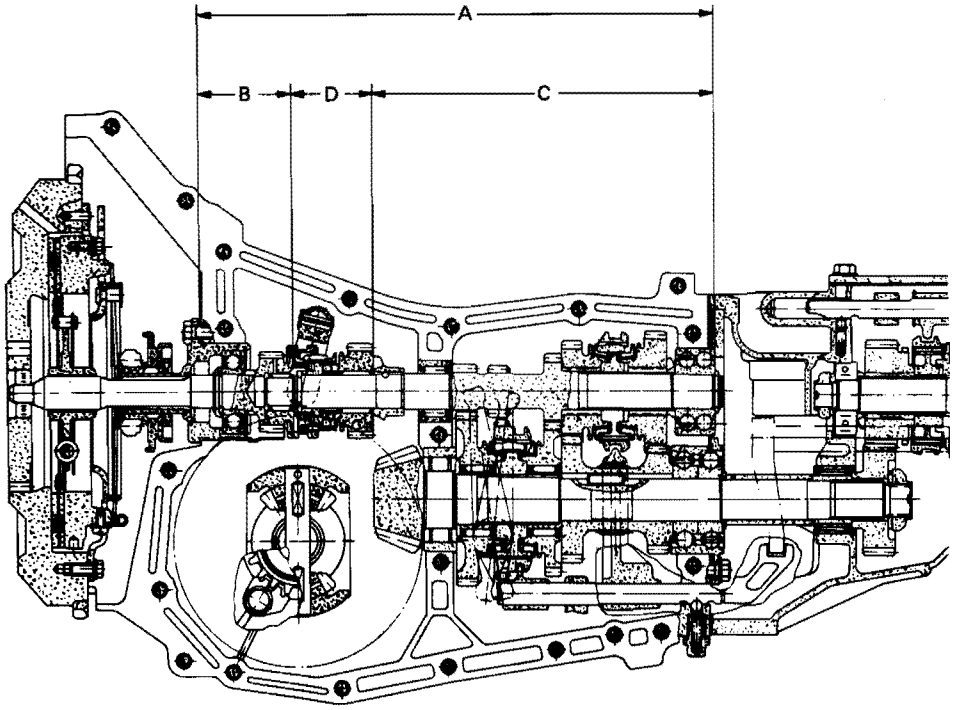

Fig. 6-123

1) Place transmission main shaft ASSY and input shaft CP on transmission main case without shim.
2) The proper number of shim can be determined as follows:

$$D = A - (B + C)$$

A: Main case length as shown in the figure.
A = 339 mm (13.35 in)
B: Input shaft CP length as shown in the figure.
C: Main shaft ASSY length as shown in the figure.

D mm (in)	Number of shim
50.39 and more (1.9839)	Nothing
49.89 – 50.38 (1.9642 – 1.9835)	1
49.88 and less (1.9638)	2

NOTE:
The thickness of shim is 0.48 to 0.52 mm (0.0189 to 0.0205 in).

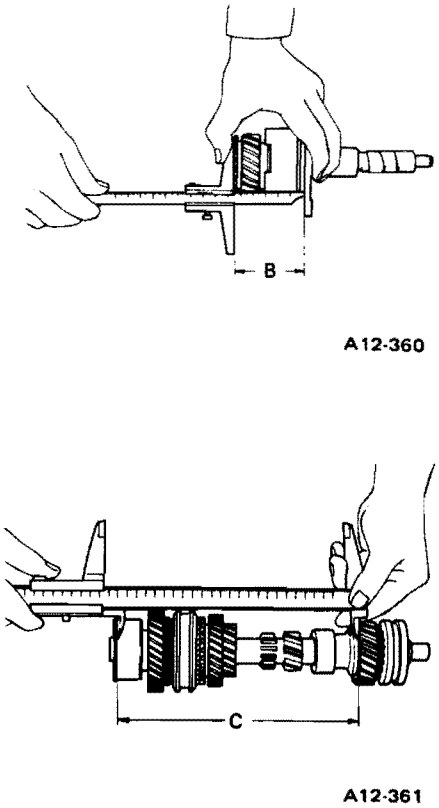

Fig. 6-124

4) Installation of Transmission Component Parts

1) Install oil seal into axle shaft oil seal holder with Installer (399790110).

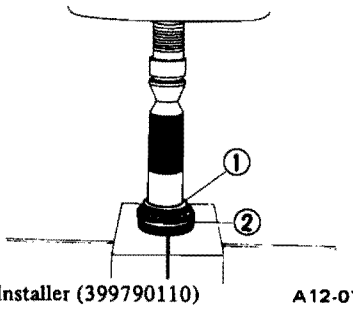

1 Installer (399790110)
2 Holder
A12-077

Fig. 6-125

2) Install transmission main case (L.H.) on Stand (399935100).
Screw axle shaft oil seal holder without O-ring into case from the bottom by using Wrench (399780111).

Downloaded from www.Manualslib.com manuals search engine

NOTE:

a. Stop screwing when the thread is entirely embedded before the holder reaches the specified position.

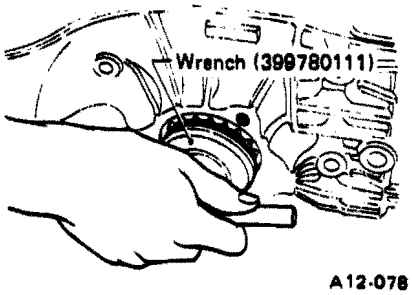

Fig. 6-126

b. Make sure to install the holder with 'L' marked oil seal.

3) After installing outer snap ring and washer onto speedometer shaft, fit them into case. Install speedometer driven gear on shaft and retain with snap ring.

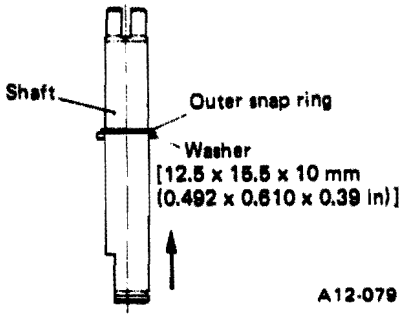

Fig. 6-127

NOTE:

When installing the outer snap ring (805012020) onto the speedometer drive shaft, insert it from the driven gear side as shown in the above figure.

4) Drive in oil seal with Press (499827000).

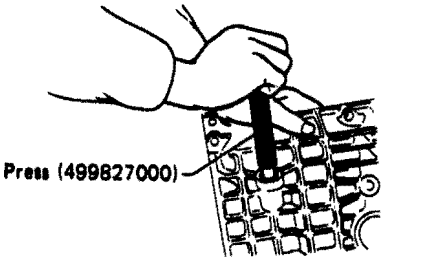

Fig. 6-128

5) 4WD Dual-range

Install oil seal in transmission main case (L.H.).

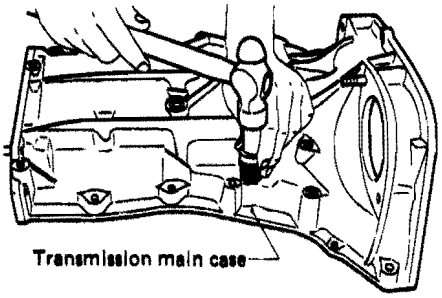

Fig. 6-129

6) Other than 5-speed

Install reverse shifter rail arm to the end of reverse shifter lever. Fit reverse shifter rail and tighten shifter fork set screw.

Torque	18.1 – 21.1 N·m (1.85 – 2.15 kg-m, 13.4 – 15.6 ft-lb)

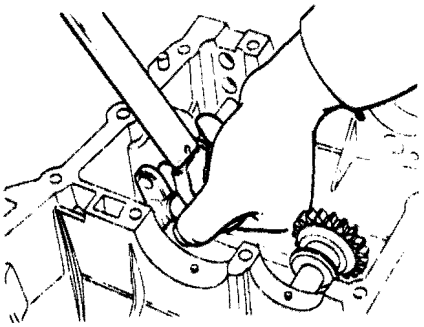

Fig. 6-130

7) 5-speed

Put reverse shifter arm spring and ball in reverse shifter rail arm.

Install reverse shifter rail into case and arm with Installer (399411700) and then fit snap ring (outer).

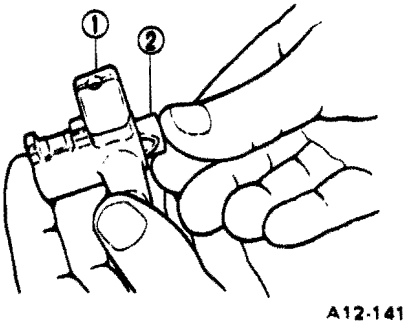

1 Arm (reverse shifter rail)
2 Installer (399411700)

Fig. 6-131

8) Install reverse idler gear and reverse idler gear shaft and retain with knock pin.

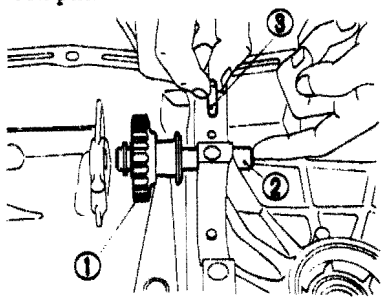

1 Reverse idler gear
2 Shaft
3 Knock pin

Fig. 6-132

9) 4WD Dual-range

Install the following parts onto counter gear shaft.

1 O-ring
2 Knock pin (at front side)

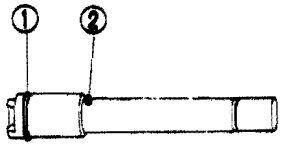

1 O-ring (21.5 x 1.5)
2 Knock pin (4 x 6)

Fig. 6-133

10) 4WD Dual-range

Install the following parts onto counter gear shaft as installing shaft into main case (R.H.), and push it perfectly into case.

1 Two counter gear washers
2 Two needle bearings
3 Counter gear collar
4 Counter gear
5 Knock pin
6 Clip

NOTE:

Make sure that cut-out end surface of counter gear shaft does not protrude above the end surface of the case.

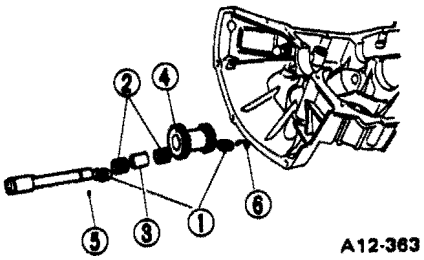

Fig. 6-134

Downloaded from www.Manualslib.com manuals search engine

11) 4WD Dual-range

Position the cut-out portion of counter gear shaft as shown in the figure.

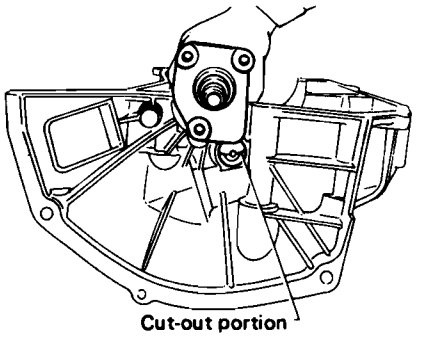

Fig. 6-135

12) For reverse shifter rail, install ball, spring and gasket into case and tighten plug.

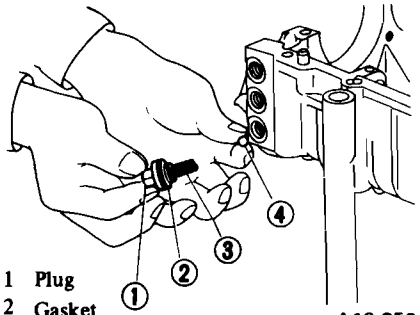

1 Plug
2 Gasket
3 Spring
4 Ball

Fig. 6-136

13) Adjustment of reverse idler gear position.

Shift reverse shifter rail and select reverse shifter rail arm (4-speed) or reverse shifter lever (5-speed) so that the clearance between reverse idler gear and case wall becomes the specified value.

Clearance	1.5 – 3.0 mm (0.059 – 0.118 in)

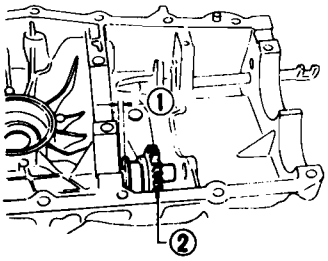

1 Clearance: 1.5 – 3.0 mm (0.059 – 0.118 in)
2 Reverse idler gear

Fig. 6-137

Other than 5-speed

Reverse shifter rail arm		
Part No.	Mark	Remarks
842004101	1	Approach to the wall of case (L.H.)
842004102	No mark	Standard
842004103	3	Recede from the wall of case (L.H.)

5-speed

Reverse shifter lever (1600)		
Part No.	Mark	Remarks
340621701	1	Further from the case wall
340621702	No mark	Center
340621703	3	Closer to the case wall

Reverse shifter lever (1800)		
Part No.	Mark	Remarks
440627101	1	Further from the case wall
440627102	No mark	Center
440627103	3	Closer to the case wall

14) 5-speed

Adjustment of gap

After selecting reverse shifter lever, shift it to the neutral position, then select the washer (15.5 x 21 x t mm) out of 5 kinds of washer so that the gap between washer and case wall becomes the specified value.

Gap	0 – 0.5 mm (0 – 0.020 in)

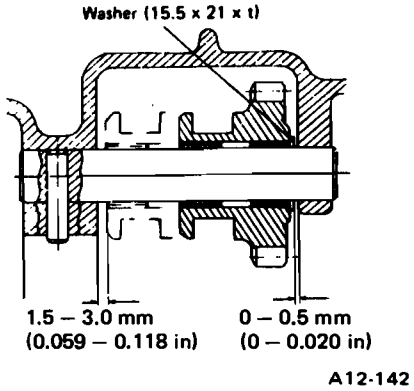

Fig. 6-138

Washer (15.5 x 21 x t mm)	
Part No.	Thickness mm (in)
803015081	0.6 – 0.8 (0.024 – 0.031)
803015082	1.0 – 1.2 (0.039 – 0.047)
803015083	1.4 – 1.6 (0.055 – 0.063)
803015084	1.8 – 2.0 (0.071 – 0.079)
803015085	2.2 – 2.4 (0.087 – 0.094)

15) Installation of 5.56 x 10.1 plunger.

Other than 5-speed

Install the plunger into the case.

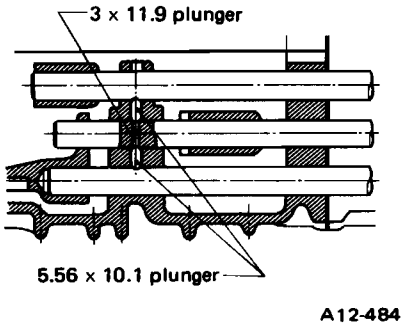

Fig. 6-139

5-speed

Install plugs into the case and reverse shifter rail arm.

Downloaded from www.Manualslib.com manuals search engine

NOTE:
Be sure to insert the correct plunger.

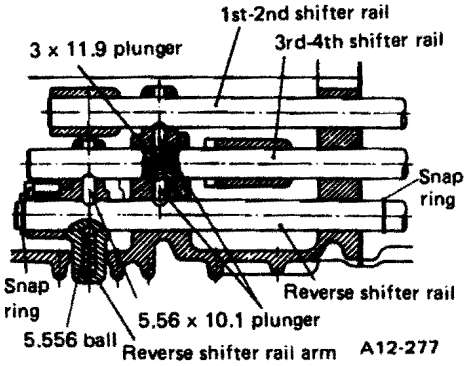

Fig. 6-140

16) 5-speed
Install 5th shifter fork on reverse shifter rail and secure with spring pin.

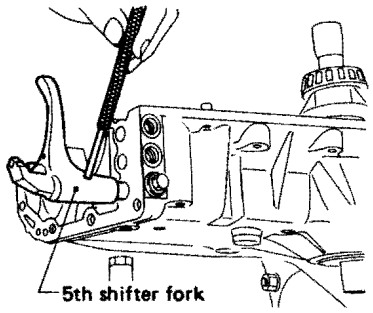

Fig. 6-141

17) Install differential.

NOTE:
Before installation, wind vinyl tape around the splines of R.H. and L.H. axle drive shafts.

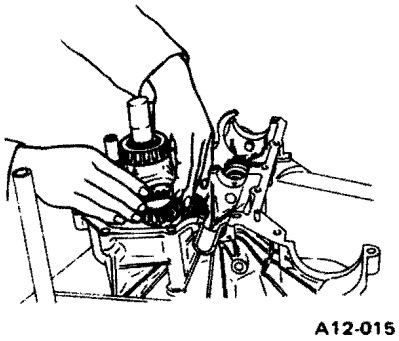

Fig. 6-142

18) Other than 4WD Dual-range
After installing needle bearing and oil seal on transmission main shaft, install main shaft ASSY into transmission case.

NOTE:
a. Wind vinyl tape around the clutch spline.
b. Ensure that the knock pin of the case is fitted into the hole in the needle bearing outer race.

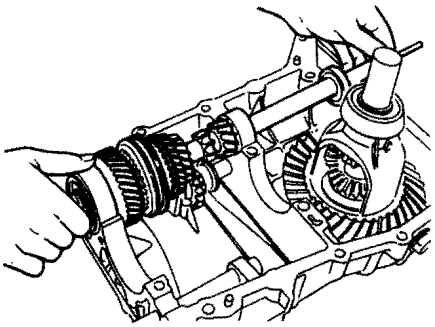

Fig. 6-143

c. In order to prevent the flange of bearing from damage, place the open end of moving flange on the ball bearing as shown in the figure.

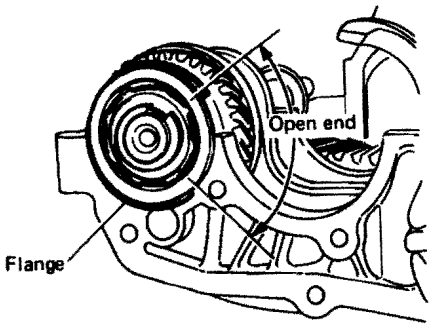

Fig. 6-144

19) 4WD Dual-range
Put main shaft ASSY, needle bearing, high-low synchronizer ring and input shaft CP together.

NOTE:
a. When installing high-low synchronizer ring, align the ring groove and insert.
b. Be sure to install the input shaft holder shims (0 to 2 sheets) selected before.
c. Apply gear oil on the needle bearing race surface.

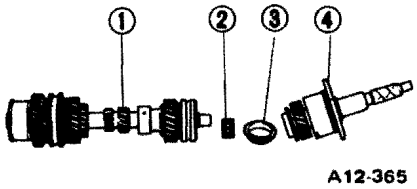

1 Main shaft assembly
2 Needle bearing
3 High-low synchronizer ring
4 Input shaft CP

Fig. 6-145

20) 4WD Dual-range
Install transmission main shaft ASSY prepared in 19) into main case.

NOTE:
a. Be careful not to separate input shaft CP from main shaft ASSY.
b. Make sure that oil guide is positioned in the groove of main case (L.H.).

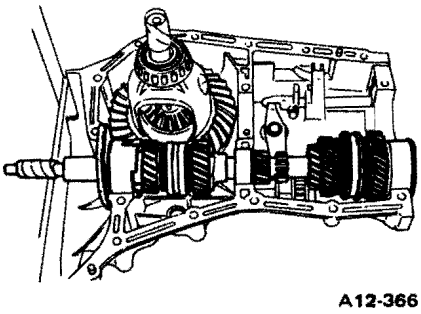

Fig. 6-146

21) 4WD Dual-range
Install high-low shifter fork with two pieces into high-low synchronizer sleeve, and turn it upward by 90°.

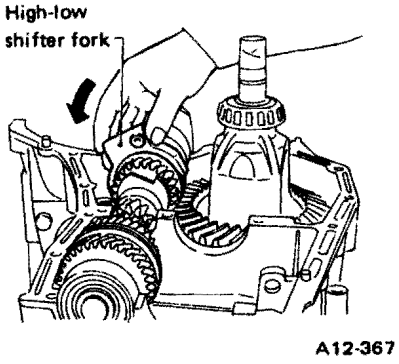

Fig. 6-147

Downloaded from www.Manualslib.com manuals search engine

22) 4WD Dual-range

Install high-low shifter lever CP into high-low shifter fork through main case (L.H.), and then strike in spring pin.

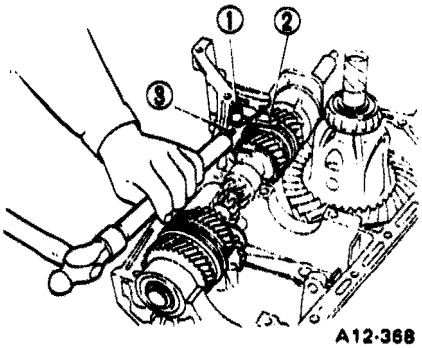

A12-368

1 High-low shifter lever CP.
2 High-low shifter fork
3 Spring pin (5 x 22)

Fig. 6-148

23) Install 3rd-4th shifter fork and 3rd-4th shifter rail with 3 x 11.9 plunger and tighten set screw.

Torque	18.1 – 21.1 N·m (1.85 – 2.15 kg-m, 13.4 – 15.6 ft-lb)

NOTE:

a. When installing rail, shift the another rail (reverse shifter rail) into neutral position.

b. When installing rail, turn 3rd-4th shifter rail by 90° so that the plunger does not drop.

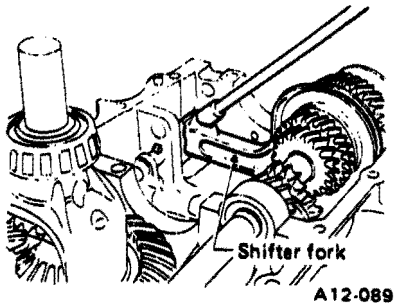

A12-089

Fig. 6-149

24) Install drive pinion with shims selected before into transmission case.

NOTE:

a. Ensure that the knock pin of the case is fitted into the hole in the bearing outer race.

To facilitate the operation, use the following method.

① Position the knock hole to the edge of case and put a mark on the top of outer race.

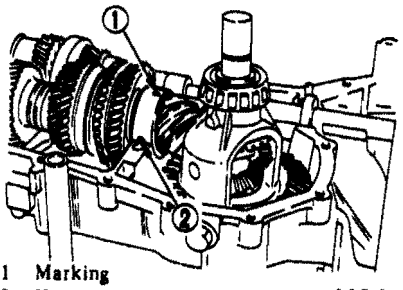

1 Marking
2 Knock pin hole

A12-092

Fig. 6-150

② Turn outer race so that the mark comes to the edge of case while slightly lifting up the drive pinion, then slightly move outer race right and left and front and rear until knock pin is fitted into the knock hole.

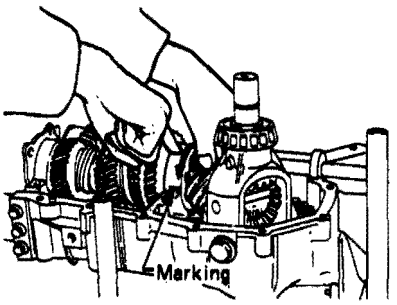

A12-093

Fig. 6-151

b. When using more than two shims for adjustment, place thinner one to flange side, and do not place shim cut end on the same side in order to facilitate the job.

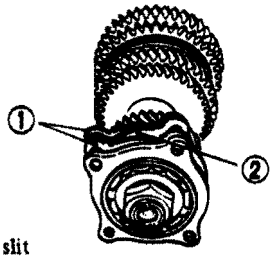

1 No slit
2 Slit

A12-091

Fig. 6-152

25) Fit 5.56 x 10.1 plunger into the case.

26) Install 1st-2nd shifter fork and 1st-2nd shifter rail, and tighten set screw.

Torque	18.1 – 21.1 N·m (1.85 – 2.15 kg-m, 13.4 – 15.6 ft-lb)

NOTE:

When installing rail, shift the other rails into neutral position.

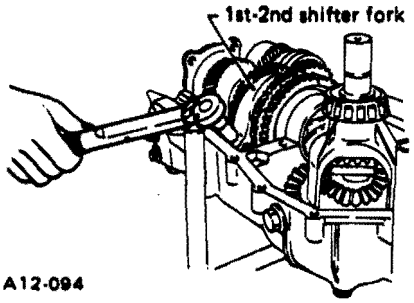

A12-094

Fig. 6-153

27) For 3rd-4th shifter rail and 1st-2nd shifter rail, install balls, springs and gaskets into the case, and tighten plugs.

Torque	18.1 – 21.1 N·m (1.85 – 2.15 kg-m, 13.4 – 15.6 ft-lb)

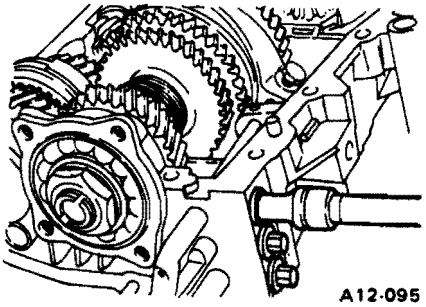

A12-095

Fig. 6-154

Downloaded from www.Manualslib.com manuals search engine

28) Selecting 3rd-4th shifter fork and 1st-2nd shifter fork.
Select 3rd-4th shifter fork and 1st-2nd shifter fork so that synchronizer sleeve and reverse driven gear are positioned as shown below when transmission main shaft and drive pinion are placed in normal position (both the main shaft and drive pinion are forced against the forward side without any clearance).

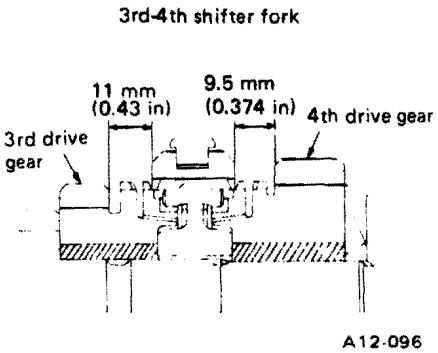

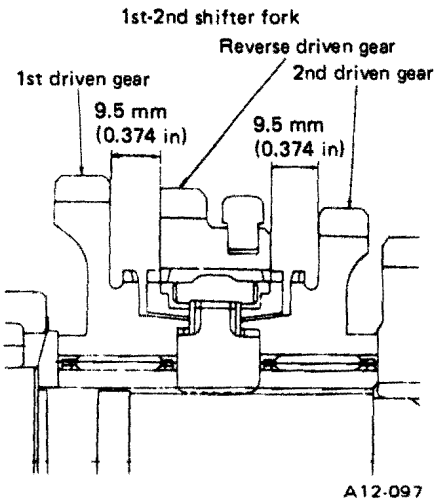

Fig. 6-155

1600

3rd-4th shifter fork		
Part No.	Identification Mark	Remarks
842014121	1	Approach to 4th gear by 0.4 mm (0.016 in)
842014122	2 or no mark	Standard
842014123	3	Approach to 3rd gear by 0.4 mm (0.016 in)
842014124	4	Approach to 4th gear by 0.2 mm (0.008 in)
842014125	5	Approach to 3rd gear by 0.2 mm (0.008 in)

1st-2nd shifter fork		
Part No.	Identification Mark	Remarks
842024121	1	Approach to 2nd gear by 0.4 mm (0.016 in)
842024122	2 or no mark	Standard
842024123	3	Approach to 1st gear by 0.4 mm (0.016 in)
842024124	4	Approach to 2nd gear by 0.2 mm (0.008 in)
842024125	5	Approach to 1st gear by 0.2 mm (0.008 in)

1800

3rd-4th shifter fork		
Part No.	Identification Mark	Remarks
442017001	1	Approach to 4th gear by 0.4 mm (0.016 in)
442017002	2	Approach to 4th gear by 0.2 mm (0.008 in)
442017003	No mark	Standard
442017004	4	Approach to 3rd gear by 0.2 mm (0.008 in)
442017005	5	Approach to 3rd gear by 0.4 mm (0.016 in)

Downloaded from www.Manualslib.com manuals search engine

1st-2nd shifter fork		
Part No.	Identification Mark	Remarks
442027001	1	Approach to 2nd gear by 0.4 mm (0.016 in)
442027002	2	Approach to 2nd gear by 0.2 mm (0.008 in)
442027003	No mark	Standard
442027004	4	Approach to 1st gear by 0.2 mm (0.008 in)
442027005	5	Approach to 1st gear by 0.4 mm (0.016 in)

29) 5-speed

Selecting 5th shifter fork.

Select 5th shifter fork so that synchronizer sleeve is positioned as shown below.

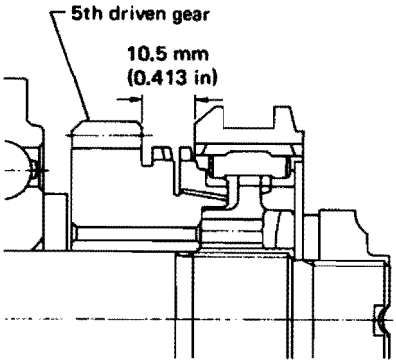

Fig. 6-156

1600

5th shifter fork		
Part No.	Identification Mark	Remarks
342031711	1	Become closer to gear side by 0.4 mm (0.016 in)
342031712	2	Become closer to gear side by 0.2 mm (0.008 in)
342031713	3 or no mark	Center
342031714	4	Become distant from gear side by 0.2 mm (0.008 in)
342031715	5	Become distant from gear side by 0.4 mm (0.016 in)

1800

5th shifter fork		
Part No.	Identification Mark	Remarks
442037011	1	Become closer to gear side by 0.4 mm (0.016 in)
442037012	2	Become closer to gear side by 0.2 mm (0.008 in)
442037013	3 or no mark	Center
442037014	4	Become distant from gear side by 0.2 mm (0.008 in)
442037015	5	Become distant from gear side by 0.4 mm (0.016 in)

Downloaded from www.Manualslib.com manuals search engine

30) Check the clearances 'A' and 'B' at the end of each rail. If dimensions 'A' and 'B' are not within specification, replace rail, fork and set screw so that specified value is obtained.

Unit: mm (in)

		A	B
Non-4WD	1600	0.3 – 1.6 (0.012 – 0.063)	0.3 – 1.6 (0.012 – 0.063)
	1800		1.8 – 3.1 (0.071 – 0.122)
4WD	1800	0.3 – 2.1 (0.012 – 0.083)	

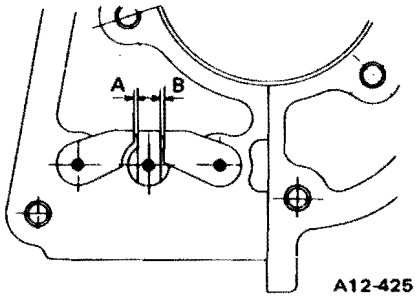

Fig. 6-157

31) Position oil seal.

a. When positioning oil seal, fit the oil seal end surface to the case end surface A.

b. When joining case (R.H.) to case (L.H.), be careful not to let oil seal tilt.

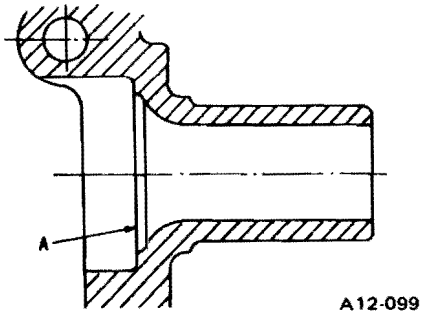

Fig. 6-158

32) Wipe off grease, oil and dust on the mating surfaces of transmission cases with white gasoline, and apply liquid gasket (Fuji Bond "C" or equivalent), and then put case (R.H.) and (L.H.) together.

NOTE:

a. Remove the outer race of upper roller bearing.

b. Put cases together so that drive pinion shim and input shaft holder shim are not caught up in between.

c. Confirm that counter gear and speedometer gear are meshed, and high-low shifter lever shaft is inserted perfectly.

d. Apply liquid gasket (Fuji Bond "C" or equivalent) with no break in the middle.

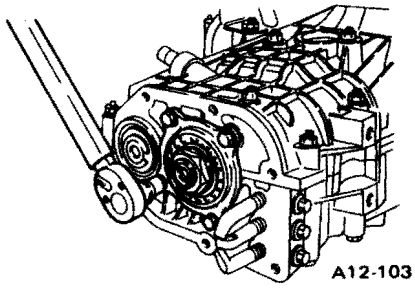

Fig. 6-159

33) Tighten bolts with bracket, clip, etc., in the following sequence.

Torque	
8 mm bolt	23 – 26 N·m (2.3 – 2.7 kg-m, 17 – 20 ft-lb)
10 mm bolt	36 – 42 N·m (3.7 – 4.3 kg-m, 27 – 31 ft-lb)
1600	8 mm bolt . . . . 15 pcs 10 mm bolt . . . . 2 pcs
1800	8 mm bolt . . . . 13 pcs 10 mm bolt . . . . 4 pcs

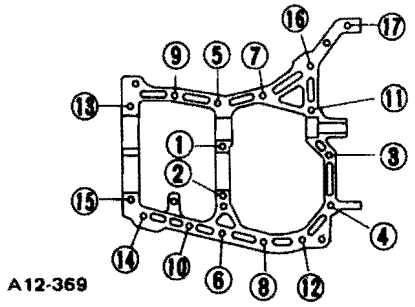

Fig. 6-160

NOTE:

Insert bolts from the bottom and tighten nuts at the top.

34) Tighten ball bearing attaching bolts at the drive pinion rear.

Torque	26 – 32 N·m (2.7 – 3.3 kg-m, 20 – 24 ft-lb)

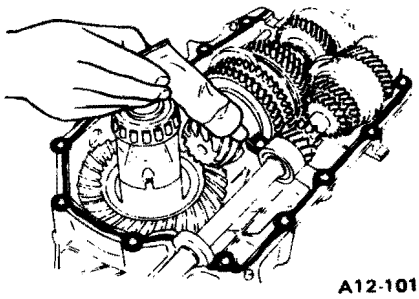

Fig. 6-161

35) 4WD Dual-range

Tighten three input shaft holder attaching bolts.

Torque	18.1 – 21.1 N·m (1.85 – 2.15 kg-m, 13.4 – 15.6 ft-lb)

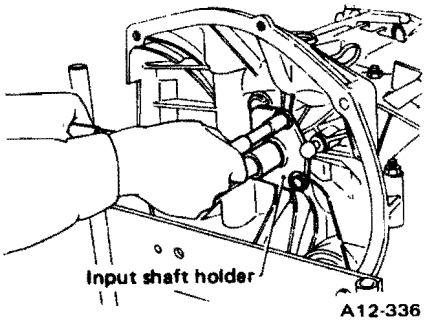

Fig. 6-162

36) Install upper bearing cup.

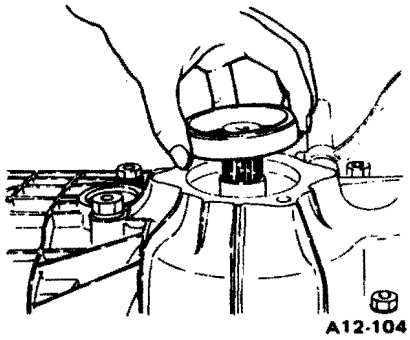

Fig. 6-163

Downloaded from www.Manualslib.com manuals search engine

37) Backlash adjustment of hypoid gear and preload adjustment of roller bearing.

a. Place the transmission with case (L.H.) facing downward and put Weight (399780104) on bearing cup.

b. Screw axle shaft oil seal holder into case (L.H.) from the bottom with Wrench (399780111). Fit Handle (499927000) on the transmission main shaft. Shift gear into 4th or 5th and turn the shaft several times. Screw in the holder while turning Handle until a slight resistance is felt on Wrench.
This is the contact point of crown gear and drive pinion. Repeat the above sequence several times to ensure the contact point.

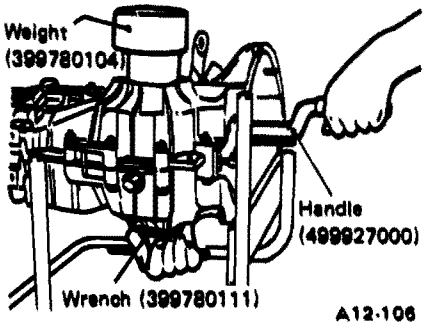

Fig. 6-164

c. Remove weight and screw in holder without O-ring on the upper side and stop at the point where slight resistance is felt.

NOTE:
At this point, the backlash between the crown gear and drive pinion is zero.

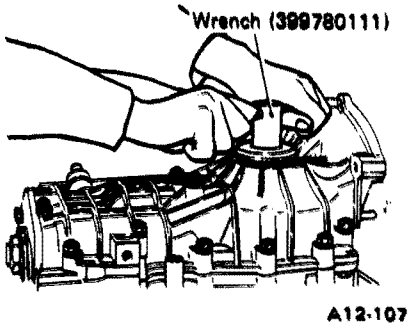

Fig. 6-165

d. Fit lock plate. Loosen the holder on the lower side by 1½ notches of lock plate and turn in the holder on the upper side by the same amount in order to obtain the backlash.

NOTE:
The notch of the lock plate moves by ½ notch if the plate is turned upside down.

e. Turn in the holder on the upper side additionally by ½ to 1 notch in order to apply preload on taper roller bearing.

f. Tighten temporarily both the upper and lower lock plates and mark both holder and lock plate for later readjustment.

g. Turn transmission main shaft dozens of turns while tapping around axle shaft bearing holder lightly with plastic hammer.

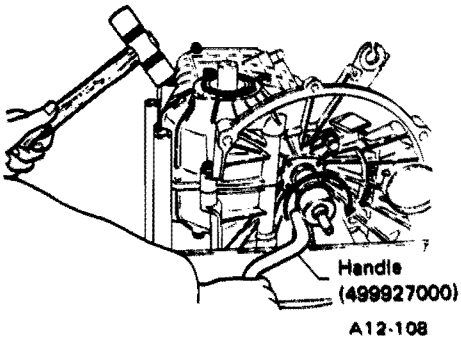

Fig. 6-166

h. Set Dial Gauge (498247100) and Magnet Base (498247001). Insert the needle through transmission oil drain plug hole so that the needle comes in contact with the tooth surface at a right angle and check the backlash.

Backlash	1600	0.1 – 0.18 mm (0.004 – 0.0071 in)
	1800	0.13 – 0.18 mm (0.0051 – 0.0071 in)

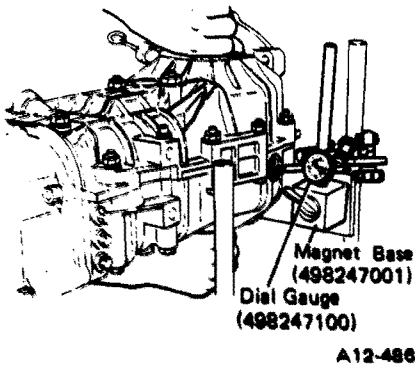

Fig. 6-167

38) Checking tooth contact of crown gear.
Apply a uniform thin coat of red lead on both tooth surfaces of 3 or 4 teeth of the crown gear. Move the crown gear back and forth by turning the transmission main shaft until a definite contact pattern is developed on crown gear, and judge whether face contact is correct. If it is incorrect, make the following correction.

NOTE:
Gear should be shifted into 4th gear.

a. Tooth contact is correct.

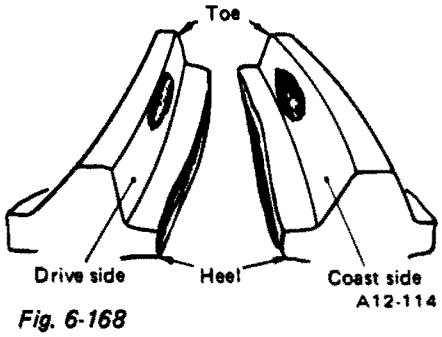

Fig. 6-168

b. Backlash is excessive.
To reduce backlash, loosen holder on the upper side (case R.H. side) and turn in the holder on the lower side (case L.H. side) by the same amount.

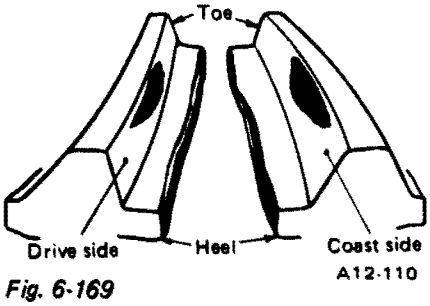

Fig. 6-169

c. Backlash is insufficient.
To increase backlash, loosen holder on the lower side (case L.H. side) and turn in the holder on the upper side (case R.H. side) by the same amount.

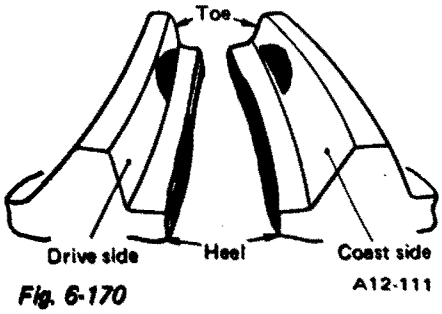

Fig. 6-170

Downloaded from www.Manualslib.com manuals search engine

d. The drive pinion shim selected before is too thick. Reduce its thickness.

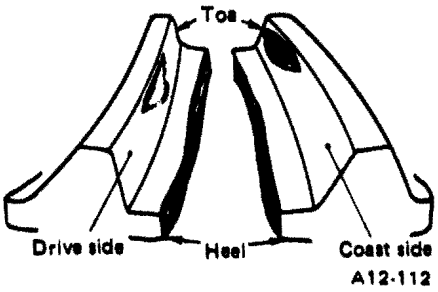

Fig. 6-171

e. The drive pinion shim selected before is too thin. Increase its thickness.

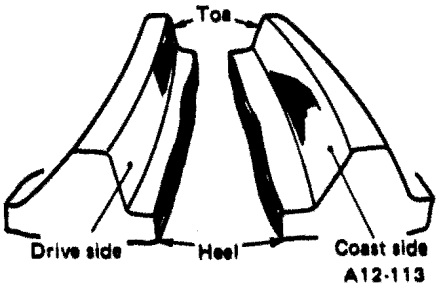

Fig. 6-172

39) After checking the tooth contact of crown gears, remove the lock plate. Then loosen axle shaft holder until the O-ring groove appears. Fit O-ring into the groove and tighten holder into the position where holder has been tightened in.
Tighten lock plate.

Torque	22 – 27 N·m (2.2 – 2.8 kg·m, 16 – 20 ft·lb)

NOTE:
Carry out this job on both upper and lower holders.

40) 4WD & 4WD Dual-range
Remove lock nut, lock washer and transfer drive gear from drive pinion.

41) 4WD & 4WD Dual-range
Install shifter arm into transfer case.

NOTE:
Apply gear oil on it.

42) Selecting of proper plate.
Using Depth Gauge (498147000), measure the amount (A) of ball bearing protrusion from transmission main case surface and select the proper plate in the following table.

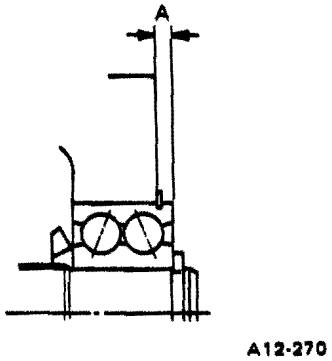

Fig. 6-173

1600

Dimension A mm (in)	Part Number	Thickness mm (in)	Discrimination stamp
3.50 – 3.63 (0.1378 – 0.1429)	441342112	5.0 (0.197)	T71-2
3.37 – 3.50 (0.1327 – 0.1378)	441342113	5.13 (0.2020)	T71-3

1800

Dimension A mm (in)	Part Number	Thickness mm (in)	Discrimination stamp
4.50 – 4.63 (0.1772 – 0.1823)	441347001	5.0 (0.197)	T81-1
4.37 – 4.50 (0.1720 – 0.1772)	441347002	5.13 (0.2020)	T81-2

NOTE:
Before measuring, tap the end of main shaft by the plastic hammer lightly in order to make the clearance zero between the main case surface and the moving flange of bearing.

43) Other than 4WD & 4WD Dual-range
Install shifter arm in transmission rear case and install them to main case with gasket and plate.

Torque	23 – 26 N·m (2.3 – 2.7 kg·m, 17 – 20 ft·lb)

NOTE:
For easier fitting of rear case, shift 1st-2nd shifter rail to 2nd position and put the shifter arm in the groove of 1st-2nd shifter rail.

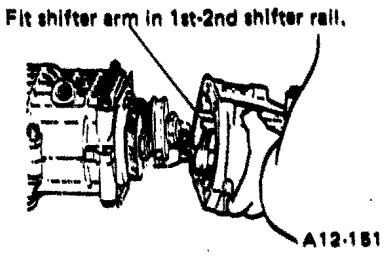

Fig. 6-174

Downloaded from www.Manualslib.com manuals search engine

44) 4WD & 4WD Dual-range

Install transfer case ASSY to main case with gasket and plate.

Torque	22 – 27 N·m (2.2 – 2.8 kg-m, 16 – 20 ft-lb)

NOTE:

Transfer drive gear should be installed when the clearance between main case and transfer case becomes approx. 10 mm (0.39 in).

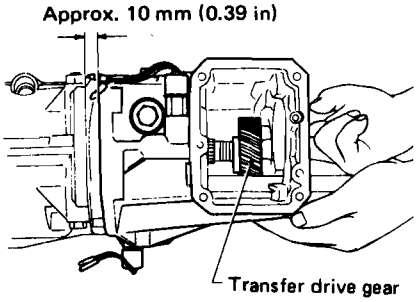

Fig. 6-175

45) 4WD & 4WD Dual-range

Install lock washer and lock nut on drive pinion, and tighten lock nut while fixing main shaft with Stopper (498787000).

Torque	110 – 126 N·m (11.2 – 12.8 kg-m, 81 – 93 ft-lb)

NOTE:

a. When tightening, gear should be shifted to '1st' position, and high-low shifter lever should be shifted to 'HI' or 'LO' position.

b. After tightening lock nut, stake it to prevent it from turning.

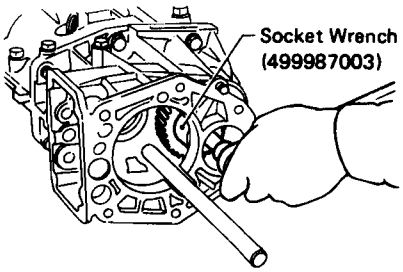

Fig. 6-176

46) 4WD Dual-range

Install O-ring in the inside of high-low shifter rail bushing.

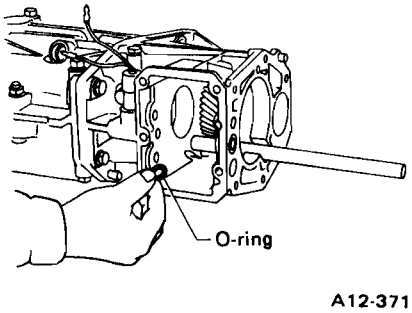

Fig. 6-177

47) 4WD Dual-range

Fit 5.56 x 10.1 plunger into high-low shifter arm.

NOTE:

Apply grease to plunger so that it will not drop off.

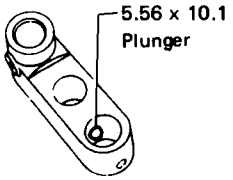

Fig. 6-178

48) 4WD Dual-range

Fit shifter fork rail spring and ball in transfer case, and install high-low shifter rail with high-low shifter arm.

NOTE:

Apply gear oil to rail.

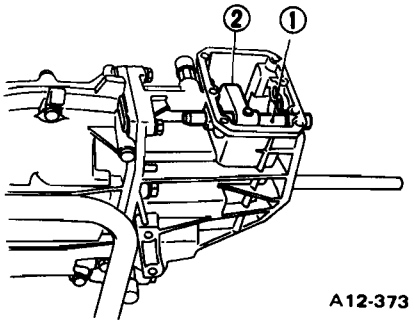

1 High-low shifter rail
2 High-low shifter arm

Fig. 6-179

49) 4WD Dual-range

Strike straight pin into high-low shifter rail.

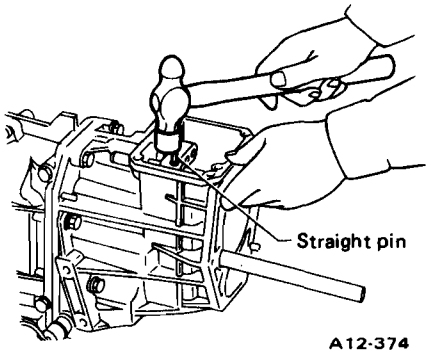

Fig. 6-180

50) 4WD & 4WD Dual-range

Install extension ASSY with transfer rear gasket and tighten bolts.

Torque	34 – 40 N·m (3.5 – 4.1 kg-m, 25 – 30 ft-lb)

NOTE:

a. Before tightening bolts, confirm that shifter arm can be shifted smoothly to any select direction.

b. Apply gear oil to shifter arm and make sure that oil seal fits in with shifter arm.

c. While installing, the gears (transfer drive and driven) should engage each other.

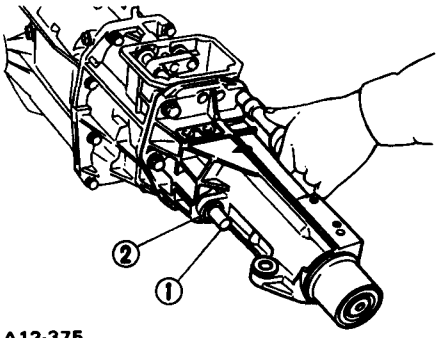

1 Shifter arm CP
2 Oil seal (16 x 26 x 5)

Fig. 6-181

Downloaded from www.Manualslib.com manuals search engine

51) 4WD

Install the following parts in transfer case.

a. Transfer shifter fork
b. Shifter fork rail spring
c. Ball
d. Transfer shifter rail

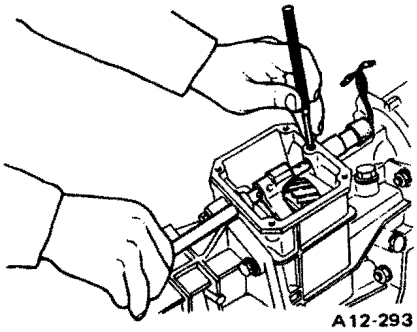

Fig. 6-182

NOTE:

a. Apply grease to the ball to prevent it from moving.
b. When installing the ball, press it down by using the end of transfer shifter rail while forcing the rail into the case with the round side down. And then rotate the rail by 180° to its proper position.

52) 4WD

Strike in straight pin.

NOTE:

After the straight pin has been struck in, move transfer shifter rail and check the accent.

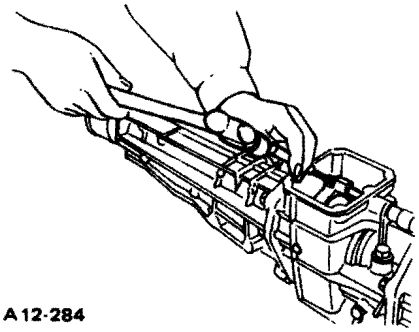

Fig. 6-183

53) 4WD Dual-range

Install the following parts into transfer shifter fork.

a. 5.56 x 10.1 plunger
b. Shifter fork rail spring
c. 6.350 ball

And then install it onto synchronizer sleeve.

NOTE:

a. Apply grease to plunger and ball so that they will not drop off.
b. Install fork diagonally so that it does not interfere with high-low shifter rail.

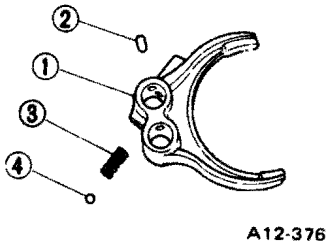

1 Fork
2 5.56 x 10.1 Plunger
3 Spring
4 6.350 ball

Fig. 6-184

54) 4WD Dual-range

Fit O-ring onto interlock rail and insert rail into transfer case.

NOTE:

a. Apply grease to rail.
b. Push ball in transfer shifter fork by applying the tapered end.

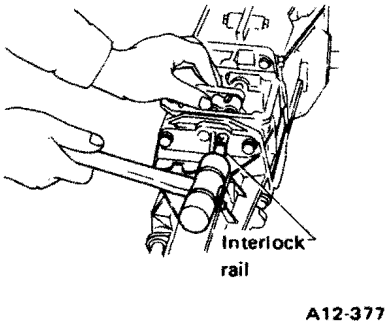

Fig. 6-185

55) 4WD Dual-range

Strike in clip onto interlock rail groove, and insert knock pin into the interlock rail hole.

NOTE:

Insert knock pin smoothly by aligning the holes of case and rail.

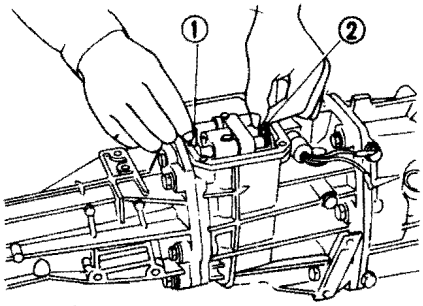

1 Knock pin
2 Clip

Fig. 6-186

56) 4WD Dual-range

Install transfer ball joint ASSY to transfer shifter rail to the specified length and tighten nut.

Torque	30 – 36 N·m (3.1 – 3.7 kg-m, 22 – 27 ft-lb)

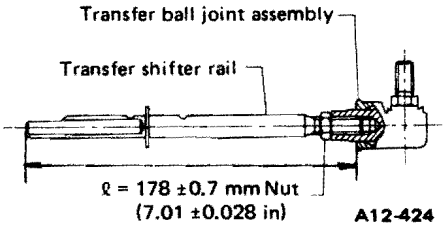

Fig. 6-187

57) 4WD Dual-range

Fit shifter fork rail spring and 6.350 ball in transfer case, and install transfer shifter rail.

NOTE:

a. Apply gear oil to rail.
b. Apply grease to ball.
c. Install rail while pressing the ball downward with proper rod.
d. When installing rail, align the rail and the hole of high-low shifter arm.
e. Perform this job at the position of '4WD HI' so that the interlock mechanism does not operate.

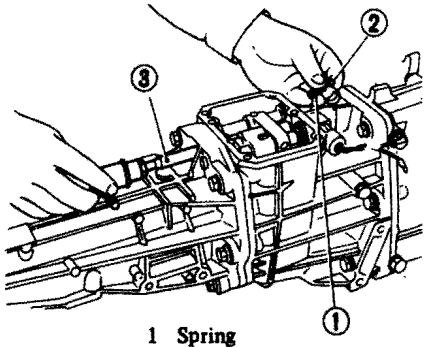

1 Spring
2 Ball
3 Transfer shifter rail CP

Fig. 6-188

Downloaded from www.Manualslib.com manuals search engine

58) 4WD Dual-range

Fit clip onto the transfer shifter rail groove.

NOTE:

a. When finding no groove, move arm or fork.

b. After fitting clip, confirm the accent in each shift position. (4WD LO ↔ 4WD HI ↔ FWD)

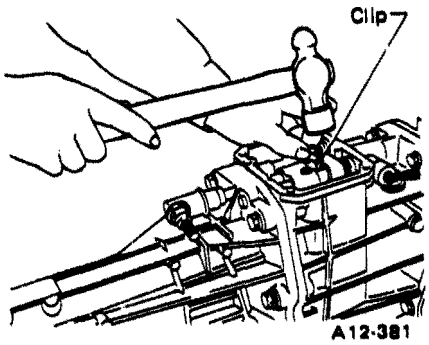

Fig. 6-189

59) 4WD Dual-range

Assemble the following parts and shorten linkage length by turning the rod adjusting screw (turn buckle) clockwise.

① High-low shifter rod
② Nut (Left-hand threaded)
③ Rod adjusting screw
④ Nut (Right-hand threaded)
⑤ Rod ball joint ASSY

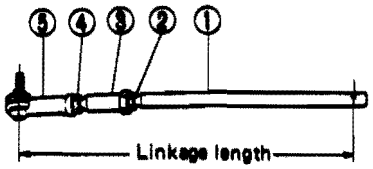

1 High-low shifter rod
2 Nut (Left-hand threaded)
3 Rod adjusting screw
4 Nut (Right-hand threaded)
5 Rod ball joint ASSY

Fig. 6-190

60) 4WD Dual-range

Insert rod arm into the rear portion of high-low shifter rod, and strike in straight pin.

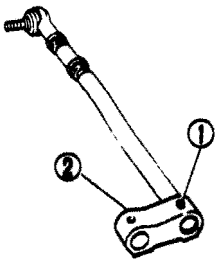

1 Straight pin (5 x 22)
2 Rod arm

Fig. 6-191

61) 4WD Dual-range

Connect rod ball joint ASSY with high-low shifter lever and tighten nut.

Torque	18.1 – 21.1 N·m (1.85 – 2.15 kg·m, 13.4 – 15.6 ft-lb)

NOTE:

Confirm the high-low shift operation by moving high-low shifter rod back and forth.

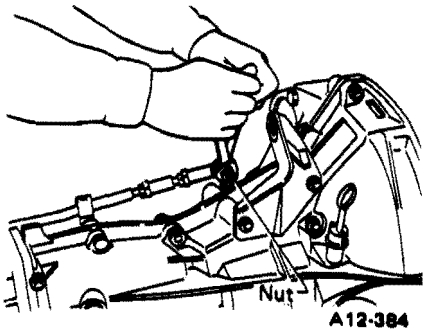

Fig. 6-192

62) 4WD Dual-range

Shift transfer shifter rail into '4WD LO' position and fix high-low shifter rail by inserting Stopper Pin (49926-7000) into its hole.

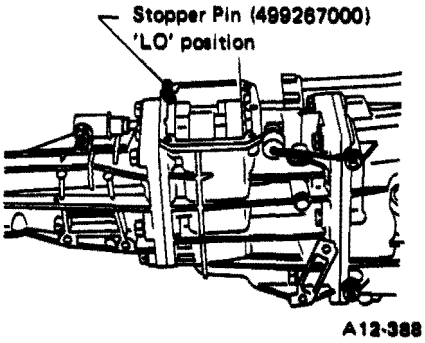

Fig. 6-193

63) 4WD Dual-range

Shift high-low shifter lever into 'LO' position and lengthen linkage length by turning rod adjusting screw (turn buckle) counter-clockwise while holding high-low shifter rod.

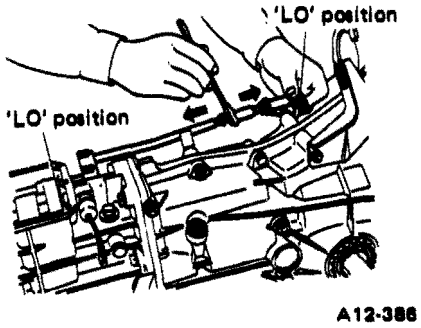

Fig. 6-194

64) 4WD Dual-range

Align the holes of rod arm and high-low shifter rod, and then strike in straight pin.

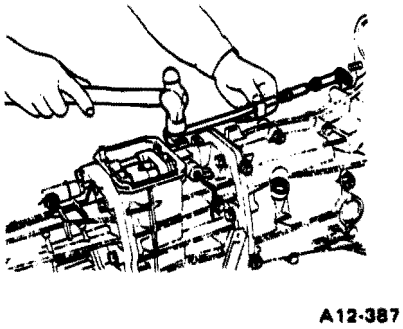

Fig. 6-195

65) 4WD Dual-range

While holding rod ball joint ASSY, turn rod adjusting screw counterclockwise, and then turn it back 90° clockwise at the point where ball joint movement becomes tight. (Rod adjusting screw tightening torque is 2 N·m (0.2 kg·m, 1.4 ft-lb).

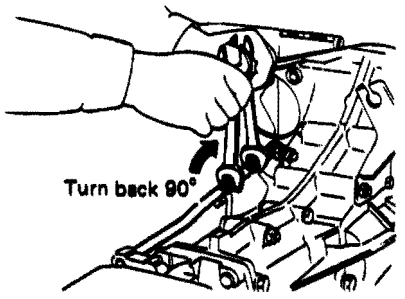

Fig. 6-196

Downloaded from www.Manualslib.com manuals search engine

66) 4WD Dual-range

Tighten rear nut (left-hand thread) at first, and then tighten front nut while holding rod ball joint ASSY.

NOTE:

a. Pull out Stopper Pin (499267000) after tightening the nuts.

b. Confirm the accent in each shift position by shifting transfer shifter rail.

Torque	30 – 36 N·m (3.1 – 3.7 kg-m, 22 – 27 ft-lb)

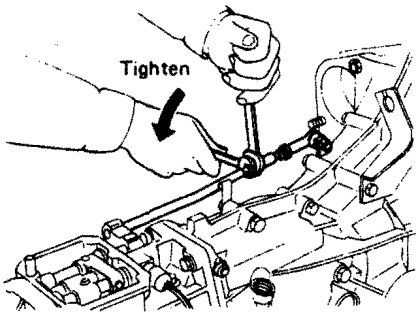

A12-389

Fig. 6-197

67) 4WD & 4WD Dual-range

Install transfer case cover with gasket and tighten bolts.

Torque	18.1 – 21.1 N·m (1.85 – 2.15 kg-m, 13.4 – 15.6 ft-lb)

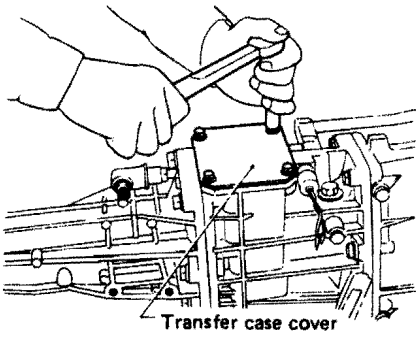

A12-390

Fig. 6-198

68) 5-speed

5th-gear position adjustment.

(1) Shift shifter shaft to the 5th-gear position after installing transmission rear case on transmission main case.

a. The case of smooth shifting.
Remove plug and set dial gauge and Magnet Base (498247001) as shown in the figure with the tip of dial gauge stem resting on the top of reverse accent shaft, when in the 5-speed position. Turn shifter shaft to the reverse side lightly and contact reverse accent shaft to the ball as shown in the figure.
Measure the contact clearance.

NOTE:

When shifter shaft is turned hard until it stops, the resistance will be felt, where the ball climbs on reverse accent shaft.

Measure it at the point that reverse accent shaft contacts to the ball.

b. The case that shifter shaft is shifted to the 5th position after the second resistance (ball climbing resistance on the shaft) is felt.
In this case the contact clearance is zero, so replace the proper reverse accent shaft in order to increase the contact clearance. Then perform the above measurement described in a.

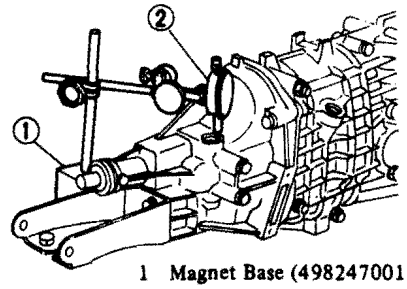

1 Magnet Base (498247001)
2 Dial gauge

A12-279

Fig. 6-199

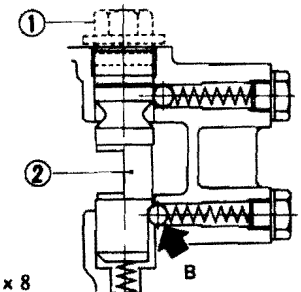

1 Plug 22 x 8
2 Reverse accent shaft

A12-280

Fig. 6-200

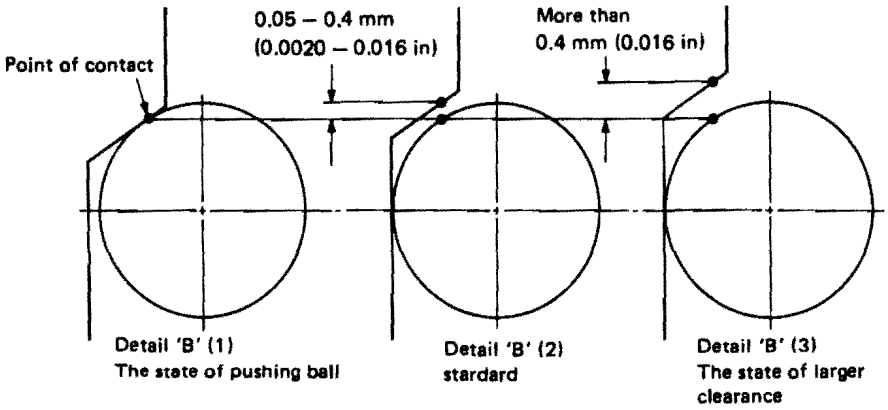

Fig. 201

A12-281

(2) Select reverse accent shaft so that the contact clearance is within 0.05 to 0.4 mm (0.0020 to 0.016 in).

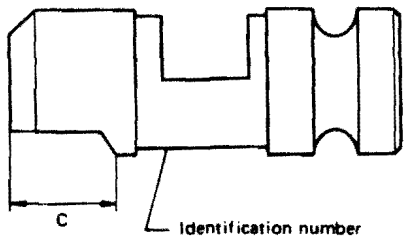

A12-213

Fig. 6-202

Downloaded from www.Manualslib.com manuals search engine

1600

No.	Part Number	Dimension C mm (in)	Contact clearance
1	442747001	16.2 – 16.4 (0.638 – 0.646)	become smaller
2	442747002	16.6 – 16.8 (0.654 – 0.661)	↑
–	442747003	17.0 – 17.2 (0.669 – 0.677)	
4	442747004	17.4 – 17.6 (0.685 – 0.693)	
5	442747005	17.8 – 18.0 (0.701 – 0.709)	
6	442747006	18.2 – 18.4 (0.717 – 0.724)	become larger

1800

No.	Part Number	Dimension C mm (in)	Contact clearance
1	442747101	12.2 – 12.4 (0.480 – 0.488)	become smaller
2	442747102	12.6 – 12.8 (0.496 – 0.504)	↑
–	442747103	13.0 – 13.2 (0.512 – 0.520)	
4	442747104	13.4 – 13.6 (0.528 – 0.535)	
5	442747105	13.8 – 14.0 (0.543 – 0.551)	
6	442747106	14.2 – 14.4 (0.559 – 0.567)	become larger

69) Neutral position adjustment.
(1) After completing the 5th-gear position adjustment (5-speed), shift gear into 3rd gear position.
(2) Shifter arm turns lightly toward the 1st/2nd gear side but heavily toward the reverse gear side because of the function of the return spring, until arm contacts the stopper.
(3) Make adjustment so that the heavy stroke (reverse side) is a little more than the light stroke (1st/2nd side).
(4) To adjust, remove the plug on rear case and change the thickness of aluminum gasket.

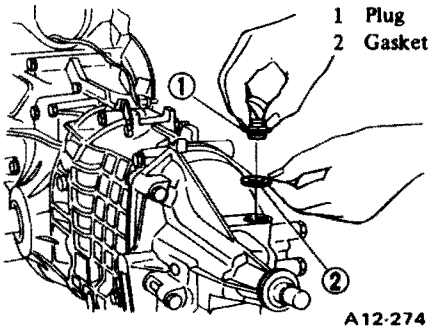

Fig. 6-203

Downloaded from www.Manualslib.com manuals search engine

Part Number	Thickness mm (in)	Remarks
803922021	0.5 (0.020)	Neutral position approaches reverse gear side
037022000	1.0 (0.039)	Standard
803922022	1.5 (0.059)	Neutral position approaches 1st/2nd gear side
803922023	2.0 (0.079)	Neutral position approaches 1st/2nd gear side

70) Install bearing holder and release fork.

1600

Install the following parts.
1. Clutch release fork
2. Release bearing holder
3. Release bearing holder springs
4. Clutch release fork sealing

NOTE:
Fill the internal groove of the holder with grease.

1800

1. Install retainer spring into fork.
2. While pushing fork to pivot and twisting it to both sides, fit retainer spring onto the constricted portion of pivot.

NOTE:
Confirm that retainer spring is securely fitted by seeing through the main case hole.

3. Install holder and fasten it with two clips.
4. Install clutch release fork sealing.

NOTE:
Before or during assembling, lubricate the following points with a light coat of grease.
a. Inner groove of release bearing holder.
b. Contact surface of fork and pivot.
c. Contact surface of fork and holder.
d. Input shaft spline. (Use grease containing molybdenum disulphide.)

71) Remove Stand Set (399295120), from transmission ASSY.

10. Remounting

1) With car body and engine in the same position as when they were removed, support transmission on jack just behind engine.
2) Carefully raise jack until transmission is aligned with engine, and secure it to engine. Be careful not to allow transmission to strike any adjacent parts while raising jack.

NOTE:
a. Apply a coat of grease to the splines of the transmission main-shaft in advance.
b. If the main shaft is hard to align with the engine, simultaneously turn the left and right transmission drive shafts until the main shaft splines engage with the engine.

3) Install center crossmember on car body as follows:
a. Align left and right rubber cushion guides for transmission mounts with guides on crossmember, and temporarily retain crossmember to car body.
b. Tighten rubber cushion retaining nuts.

Torque	34 – 47 N·m (3.5 – 4.8 kg-m, 25 – 35 ft-lb)

c. Tighten crossmember by using self-locking nuts.

Torque	20 – 25 N·m (2.0 – 2.6 kg-m, 14 – 19 ft-lb)

NOTE:
Always use new self-locking nuts.

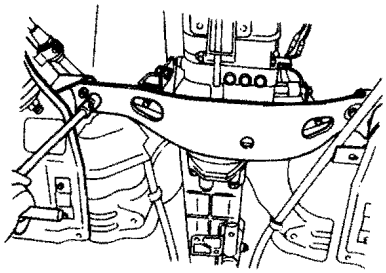

A4-133

Fig. 6-204 Installing crossmember

4) Remove jack from transmission.
5) Clamp parking brake cable to body.
- Tightening torque for cable clamp:

Torque	6.4 – 9.3 N·m (0.65 – 0.95 kg-m, 4.7 – 6.9 ft-lb)

6) Align the spring pin holes on axle shaft and drive shaft, and drive spring pin into the holes.

NOTE:
Always install a new spring pin.

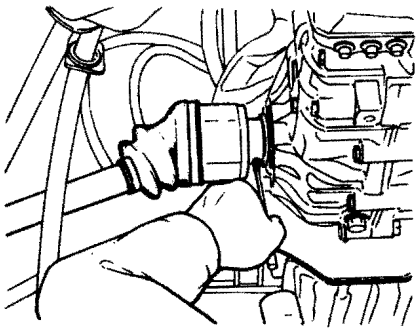

A15-015

Fig. 6-205 Installing axle shaft

Downloaded from www.Manualslib.com manuals search engine

7) Using a screwdriver, properly align the bolt holes on both left and right transverse links with crossmember, and insert bolts into the holes from the front side. Tighten nuts securely.

NOTE:

a. Always use new nuts.

b. Tighten the nuts to the specified torque after finishing all work and lowering the car to the floor.

Torque	59 – 69 N·m (6.0 – 7.0 kg-m, 43 – 51 ft-lb)

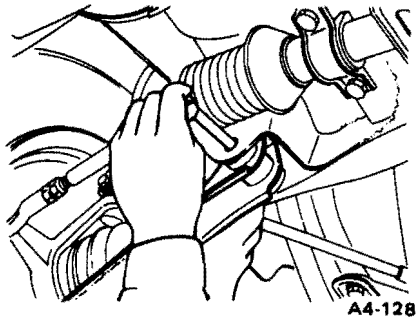

Fig. 6-206 Installing transverse link

8) Install stabilizer.

Be sure to position two center bushings with their slits facing the rear side of car and two outer bushings with their slits facing the inside.

Torque	18 – 22 N·m (1.8 – 2.2 kg-m, 13 – 16 ft-lb)

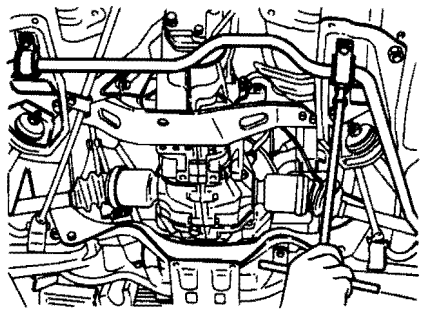

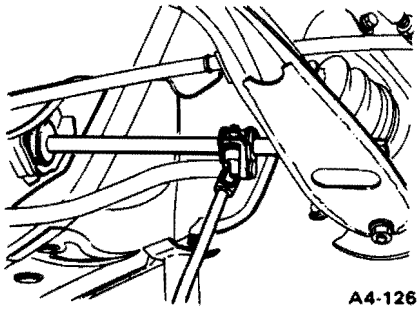

Fig. 6-207 Installing stabilizer

9) Install the gearshift system on transmission. (except 4WD)

Torque	14 – 22 N·m (1.4 – 2.2 kg-m, 10 – 16 ft-lb)

NOTE:

Always use new self-locking nuts.

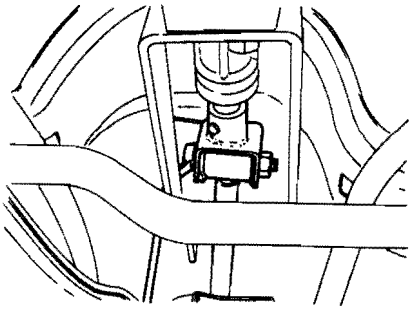

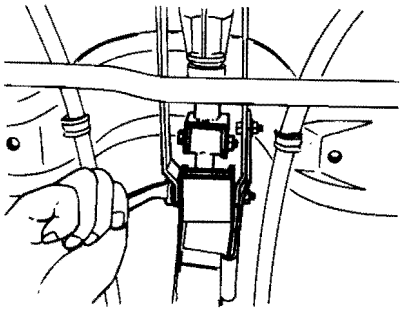

Fig. 6-208 Connecting gearshift system

10) On 4WD, remove drive shaft cap, install propeller shaft, and then securely tighten differential gear flange using bolts and nuts.

Torque	18 – 25 N·m (1.8 – 2.5 kg-m, 13 – 18 ft-lb)

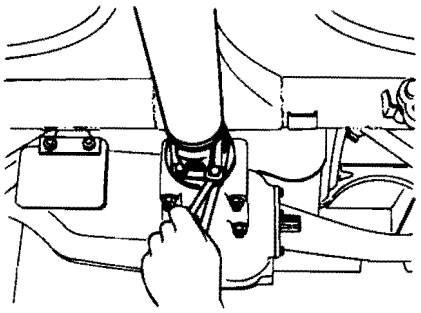

Fig. 6-209 Installing propeller shaft

11) Install front exhaust pipe ASSY as follows:

a. Position exhaust pipe on bracket on car body, and secure it with bolts.

b. Install a new gasket to the exhaust port of engine, and temporarily tighten exhaust pipe retaining nuts.

c. Temporarily tighten front and rear exhaust pipes with new gasket in place.

d. After making sure that exhaust pipe ASSY is properly positioned, re-tighten bolts and nuts securely.

Torque
Front exhaust pipe to engine: 25 – 29 N·m (2.6 – 3.0 kg-m, 19 – 22 ft-lb) Front exhaust pipe to rear exhaust pipe: 42 – 52 N·m (4.3 – 5.3 kg-m, 31 – 38 ft-lb) Front exhaust pipe to bracket: *4WD 25 – 34 N·m (2.5 – 3.5 kg-m, 18 – 25 ft-lb) *Non-4WD (10 – 18 N·m (1.0 – 1.8 kg-m, 7 – 13 ft-lb)

NOTE:

Be careful not to strike the oxygen sensor against any adjacent parts during installation.

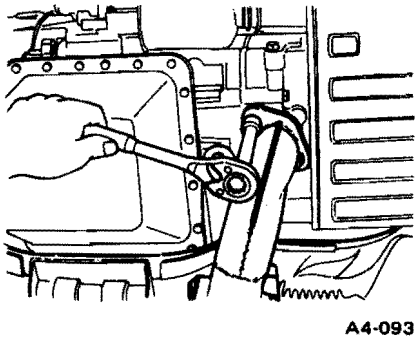

Fig. 6-210

12) Securely connect O_2 sensor harness to O_2 sensor and clamp it.

13) Connect hot air intake hose.

14) Lower car body to the floor.

15) Tighten bolts and nuts which retain engine to transmission to the specified torque. Also install starter.

Torque	46 – 54 N·m (4.7 – 5.5 kg-m, 34 – 40 ft-lb)

Downloaded from www.Manualslib.com manuals search engine

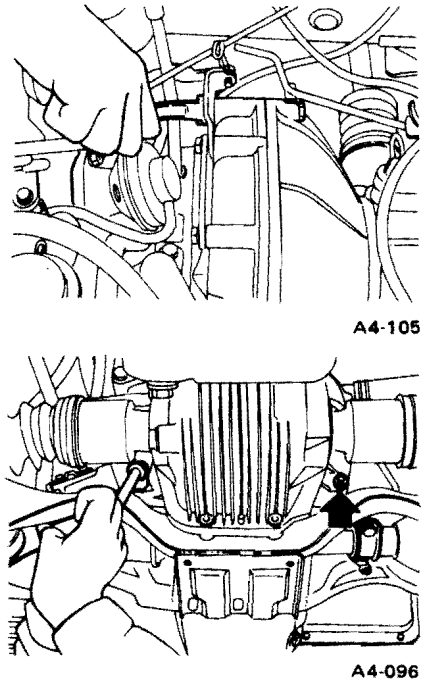

Fig. 6-211 Tightening bolts and nuts

16) Adjust pitching stopper as follows:
a. Loosen nut until pitching stopper on bracket (on the engine side) is free to move.
b. Tighten rear nut until the rubber cushion-to-washer clearance is within specified value.

Specified clearance
0.8 – 1.2 mm (0.031 – 0.047 in)

c. Attach a wrench to rear nut, and tighten front nut securely.

Torque	10 – 18 N·m (1.0 – 1.8 kg-m, 7 – 13 ft-lb)

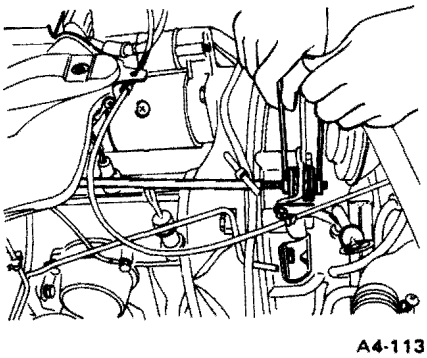

Fig. 6-212 Adjusting pitching stopper

17) Connect speedometer cable to transmission, and tighten it hard with your fingers. Then, using pliers, re-tighten cable by approximately 30°.

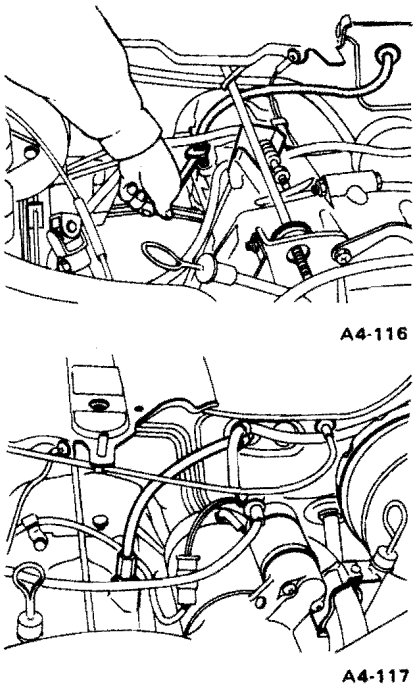

Fig. 6-213 Connecting speedometer

18) Route speedometer cable underneath pitching stopper with battery cable, and clamp it on pitching stopper.
19) Make all necessary wiring connections.

NOTE:
Be sure to connect the ground cable.

20) Connect clutch cable and adjust the free play of cable.
21) On 4WD, connect both the 4WD selector system and gearshift system with transmission as follows:
a. Insert gearshift lever into dust seal, and connect gearshift lever with lever.
(Use new self-locking nut.)

Torque (Self- locking nut)	14 – 22 N·m (1.4 – 2.2 kg-m, 10 – 16 ft-lb)

NOTE:
Insert the dust seal upper end into the groove of gearshift lever firmly.

b. Insert rod A into boot, and fix boot to body.
c. Install rod B and drive selector lever to plate.
(Use new self-locking nuts.)

Torque (Self- locking nut)	14 – 22 N·m (1.4 – 2.2 kg-m, 10 – 16 ft-lb)

d. Connect rod A with rod B by tightening nut while holding rod A with a wrench.

Torque (Nut)	48 – 49 N·m (4.9 – 5.0 kg-m, 35 – 36 ft-lb)

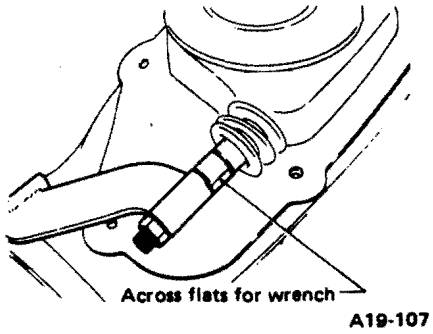

Fig. 6-214

e. Install rod cover.
f. Install hand brake cover, and then hand brake tray cover.
22) Connect battery ground cable.
23) Check the transmission oil level and, if necessary, add oil.
24) Start engine. Check exhaust pipe connections to ensure there is no gas leakage.
25) Check the operation of clutch for smooth engagement and disengagement.
26) Check the operation of shift lever or select lever for smooth gearshifting.
27) After all work has been completed, install spare tire.

Downloaded from www.Manualslib.com manuals search engine

6-4. Transmission Control System

1. Component Parts

Except 4WD

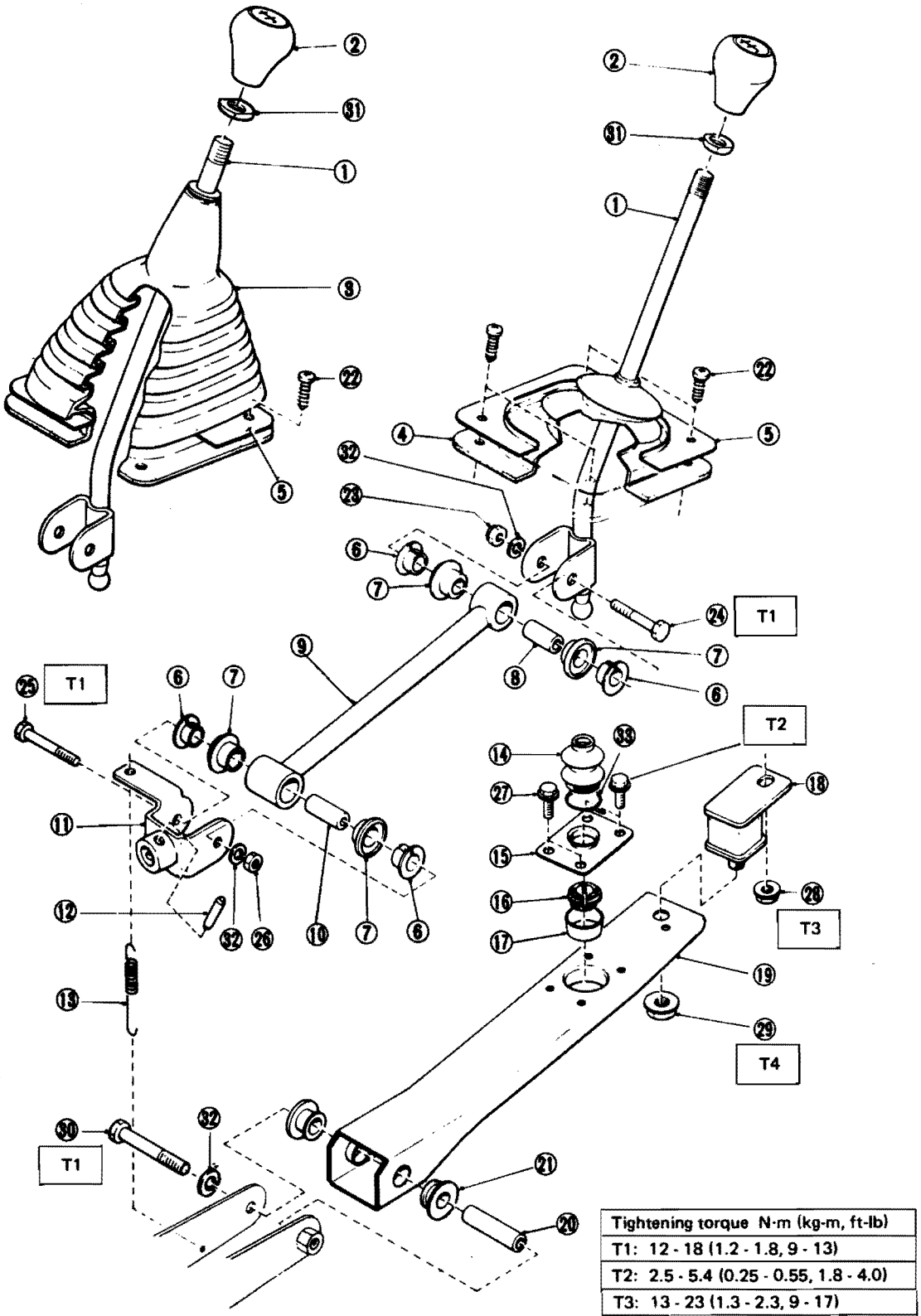

Tightening torque N·m (kg-m, ft-lb)
T1: 12 - 18 (1.2 - 1.8, 9 - 13)
T2: 2.5 - 5.4 (0.25 - 0.55, 1.8 - 4.0)
T3: 13 - 23 (1.3 - 2.3, 9 - 17)
T4: 20 - 29 (2 0 - 3.0, 14 - 22)

1 Lever
2 Knob
3 Boot
4 Boot
5 Plate
6 Bushing (Resin)
7 Bushing (Rubber)
8 Spacer
9 Rod
10 Spacer
11 Joint
12 Spring pin
13 Neutral set spring
14 Dust seal
15 Plate
16 Bushing
17 Cushion
18 Cushion rubber
19 Stay
20 Spacer
21 Bushing (Rubber)
22 Flange tapping screw
23 Nut
24 Bolt
25 Bolt
26 Nut
27 Flange bolt
28 Flange nut
29 Flange nut
30 Bolt
31 Nut
32 Spring washer
33 Lock wire

A19-129

Fig. 6-215

Downloaded from www.Manualslib.com manuals search engine

4WD

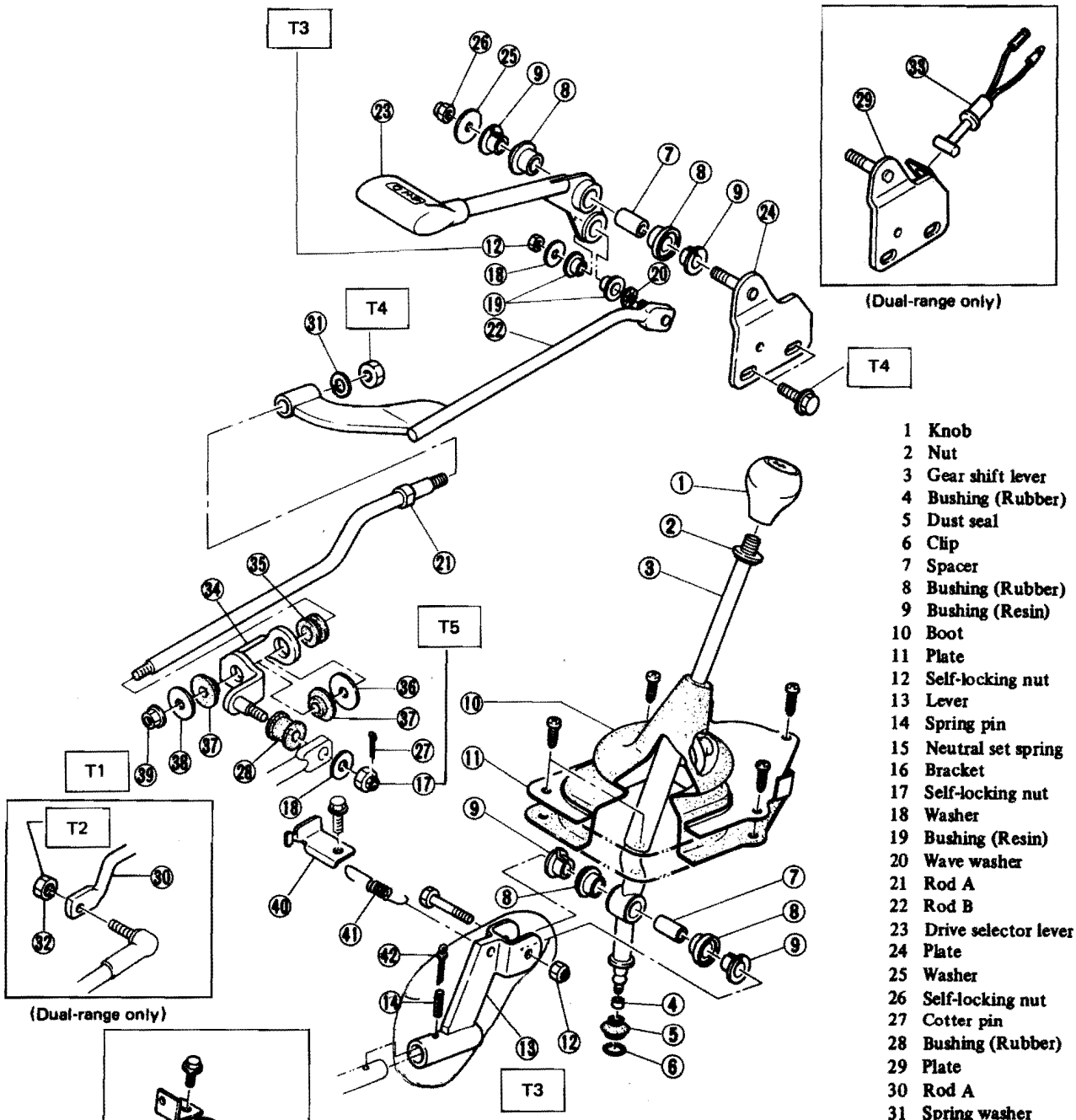

Tightening torque N·m (kg-m, ft-lb)
T1: 12 - 16 (1.2 - 1.6, 9 - 12)
T2: 23 - 36 (2.3 - 3.7, 17 - 27)
T3: 14 - 22 (1.4 - 2.2, 10 - 16)
T4: 39 - 49 (4.0 - 5.0, 29 - 36)
T5: 5 - 9 (0.5 - 0.9, 3.6 - 6.5)

1 Knob
2 Nut
3 Gear shift lever
4 Bushing (Rubber)
5 Dust seal
6 Clip
7 Spacer
8 Bushing (Rubber)
9 Bushing (Resin)
10 Boot
11 Plate
12 Self-locking nut
13 Lever
14 Spring pin
15 Neutral set spring
16 Bracket
17 Self-locking nut
18 Washer
19 Bushing (Resin)
20 Wave washer
21 Rod A
22 Rod B
23 Drive selector lever
24 Plate
25 Washer
26 Self-locking nut
27 Cotter pin
28 Bushing (Rubber)
29 Plate
30 Rod A
31 Spring washer
32 Self-locking nut
33 Switch
34 Bracket
35 Bush B
36 Washer
37 Bush A
38 Washer
39 Self-locking nut
40 Bracket
41 Neutral set spring
42 Cotter pin

A19-151

Fig. 6-216

Downloaded from www.Manualslib.com manuals search engine

2. Removal and Disassembly

Except 4WD

1) Gearshift lever knob.
2) Front exhaust pipe.
3) Removal of gearshift lever ASSY.
a. Neutral set spring
b. Stay (from engine rear mounting bracket)
c. Rod (from joint)
d. Cushion rubber
4) Disassembly of gearshift lever ASSY.
a. Rod from lever
b. Spacer, bushing (rubber) and bushing (resin) from rod
c. Lever from stay
d. Cushion, bushing, plate and dust seal from lever
e. Spacer, bushing and cushion rubber from stay

4WD

1) Exhaust system.
2) Rod cover, parking brake cover and tray.
3) Gearshift lever knob.
4) Nut which connects rod B with rod A.
5) Plate from body.
6) Boot and neutral set spring.
7) Separate rod A from transfer rail of transmission.

NOTE:
Be careful not to lose bushing. (except Dual-range)

8) Gearshift lever from lever.
9) Lever from shifter arm by taking out cotter pin and driving out spring pin.
10) Dust seal.
11) Disassembly of gearshift lever.
a. Spacer
b. Bushing (resin)
c. Bushing (rubber)
12) Separate plate from drive selector lever. For dual-range, remove switch from plate.
13) Remove the parts shown in figure from drive selector lever.

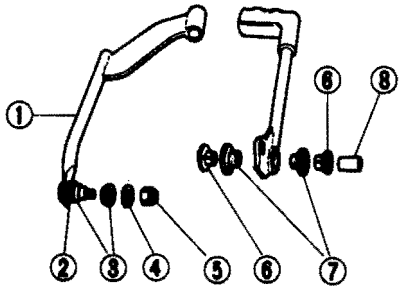

1 Rod B
2 Wave washer
3 Bushing
4 Washer
5 Self-locking nut
6 Bushing (resin)
7 Bushing (rubber)
8 Spacer

A19-100

Fig. 6-217

14) Remove the following parts from rod A as shown in the illustration.

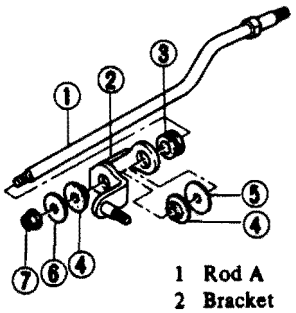

1 Rod A
2 Bracket
3 Bush
4 Bush
5 Washer
6 Washer
7 Self-locking nut

A19-153

Fig. 6-218

Downloaded from www.Manualslib.com manuals search engine

3. Inspection

Inspect the following parts by comparing with new ones for deformation, damage and wear. Correct or replace if defective.

Except 4WD

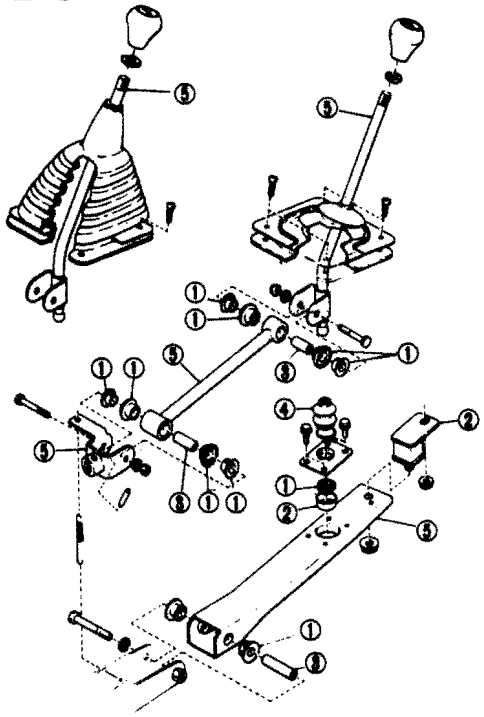

A19-130

1 Bushing
2 Cushion
3 Spacer
4 Dust seal
5 Joint, rod, lever and stay

Fig. 6-219

4WD

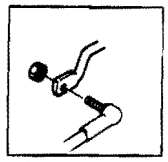

(Dual-range)

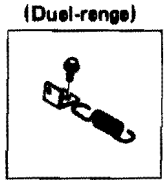

(Dual-range)

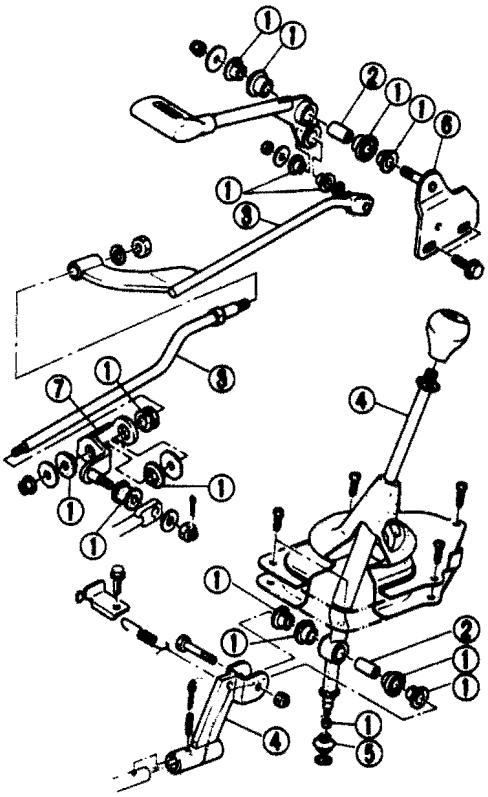

A19-154

1 Bushing
2 Spacer
3 Rod
4 Lever
5 Dust seal
6 Plate
7 Bracket

4. Assembly

Except 4WD

1) Clean all parts before assembly.
2) Assemble following parts to stay.

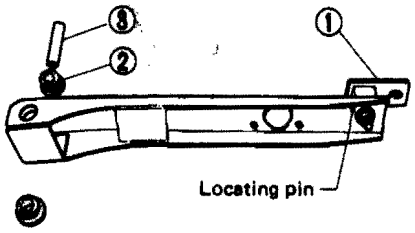

1 Cushion rubber
2 Bushing
3 Spacer

A19-068

Fig. 6-220

a. Cushion rubber
Be sure to fit the locating pin of cushion rubber into the stay hole.

Torque (Flange nut)	20 – 29 N·m (2.0 – 3.0 kg·m, 14 – 22 ft-lb)

b. Bushing
Face its smaller flange inward.

c. Spacer

3) Assemble plate and dust seal. Wind 1 mm dia. wire round dust seal to fix it, and twist the ends of wire so as to tighten them.

NOTE:
Face the ends of wire toward the longer periphery side of plate.

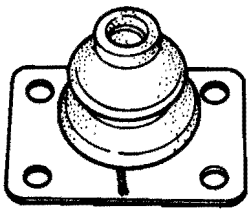

A19-069

Fig. 6-221

Downloaded from www.Manualslib.com manuals search engine

4) Assemble following parts to lever.

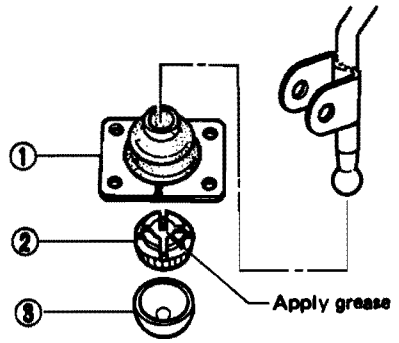

1 Dust seal
2 Bushing
3 Cushion

A19-097

Fig. 6-222

a. Dust seal
b. Bushing
Apply grease to inside of bushing.
c. Cushion

5) Assemble the lever assembled in 4) to stay.

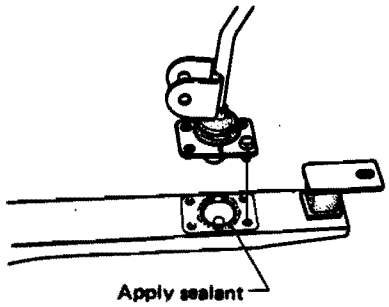

A19-070

Fig. 6-223

a. Apply sealant to the plate mating surface of stay around the recess on stay but inside four thread holes.
*Sealant: Butyle rubber (string) [1.5 mm (0.059 in) dia.]
b. Install plate to stay so that the ends of dust seal fixing wire come to the left side (1st/2nd gear side).

Torque (Flange bolt)	2.5 – 5.4 N·m (0.25 – 0.55 kg-m, 1.8 – 4.0 ft-lb)

c. After assembling, check lever for smooth movement.

6) Assemble bushing (rubber), bushing (resin) and spacer to rod.

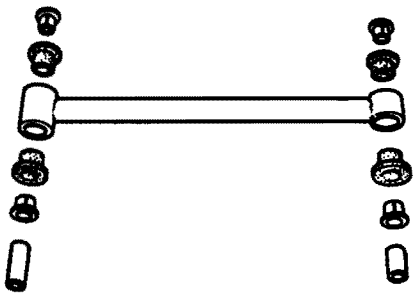

A19-063

Fig. 6-224

a. When assembling spacer, apply grease to the inside and side surfaces of bushing.
b. Assemble chromium plated spacer to the lever side of rod and zinced spacer to the transmission side respectively.
c. One end with wider width of rod is for the transmission side and the other end is for lever side.

7) Connect lever with rod.

Torque	12 – 18 N·m (1.2 – 1.8 kg-m, 9 – 13 ft-lb)

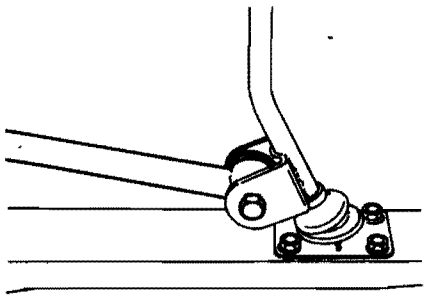

A19-062

Fig. 6-225

Maximum yawing torque	2.7 N·m (0.28 kg-m, 2.0 ft-lb)

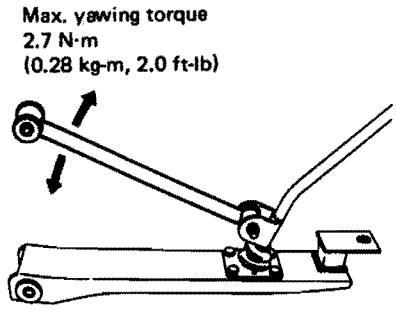

A19-071

Fig. 6-226

8) Make sure that each portion has no looseness and moves smoothly.

4WD

1) Clean all parts before assembly.
2) Assemble bushings and a spacer to gearshift lever.
(Be sure to apply grease to the sliding part of bushing.)

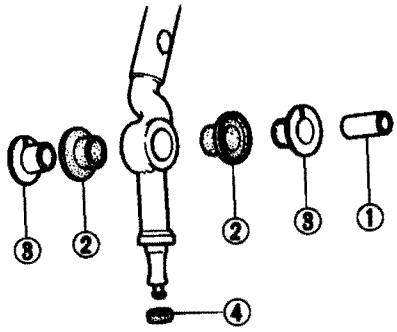

1 Spacer
2 Bushing (rubber)
3 Bushing (resin)
4 Bushing (rubber)

A19-098

Fig. 6-227

3) Assemble the parts shown in figure to drive selector lever.

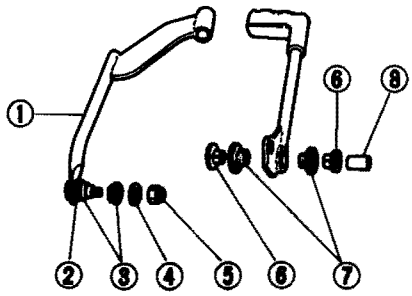

1 Rod B
2 Wave washer
3 Bushing
4 Washer
5 Self-locking nut
6 Bushing (resin)
7 Bushing (rubber)
8 Spacer

A19-100

Fig. 6-228

Downloaded from www.Manualslib.com manuals search engine

a. Be sure to apply grease to the sliding part of bushing.
b. Use new self-locking nut.

Torque (Self-locking nut)	14 – 22 N·m (1.4 – 2.2 kg-m, 10 – 16 ft-lb)
Maximum yawing torque (Lever to rod B)	1 N·m (0.1 kg-m, 0.7 ft-lb)

4) Assemble drive selector lever assembled in 3) to plate. For dual-range, install switch onto plate.

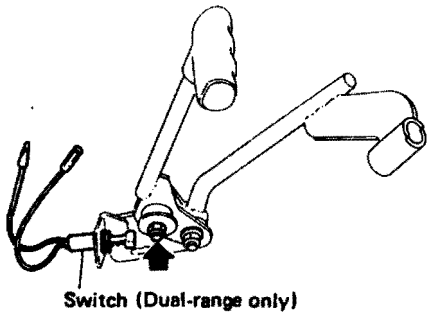

Fig. 6-229

a. Be sure to apply grease to the sliding part of bushing.
b. Use new self-locking nut.

Torque (Self-locking nut)	14 – 22 N·m (1.4 – 2.2 kg-m, 10 – 16 ft-lb)
Maximum yawing torque (Lever to plate)	2.7 N·m (0.28 kg-m, 2.0 ft-lb)

5) Assemble the following parts onto rod A as shown in the illustration.

Torque (Self-locking nut)	12 – 16 N·m (1.2 – 1.6 kg-m, 9 – 12 ft-lb)

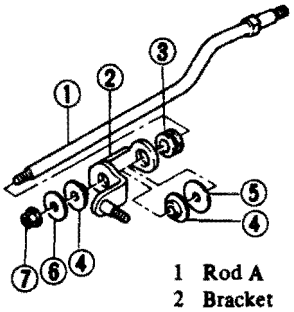

Fig. 6-230

NOTE:
Use new self-locking nut.

5. Installation

Except 4WD

1) Connect rod with joint after inserting bolt from the right hand.

Torque	12 – 18 N·m (1.2 – 1.8 kg-m, 9 – 13 ft-lb)

2) Connect stay with engine rear mounting bracket.

Torque	12 – 18 N·m (1.2 – 1.8 kg-m, 9 – 13 ft-lb)

3) Connect cushion rubber with body.

Torque (Flange nut)	13 – 23 N·m (1.3 – 2.3 kg-m, 9 – 17 ft-lb)

4) Install neutral set spring.
5) Install lock nut and knob.
a. Screw in knob to the extent that it can not be screwed in lightly.
b. Screw in knob further (less than one rotation) so that the shift pattern (on the head of knob) matches the movement of lever.
c. Then tighten lock nut.

Minimum torque (Nut)	4 N·m (0.4 kg-m, 2.9 ft-lb)

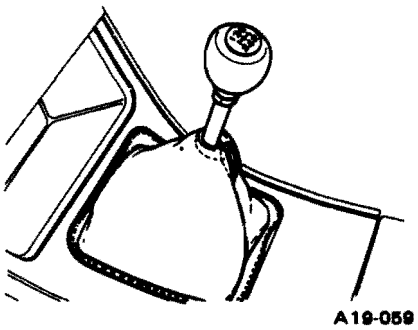

Fig. 6-231

6) Check lever for smooth movement.
7) Attach front exhaust pipe.

4WD

1) Install following parts to transfer rail.

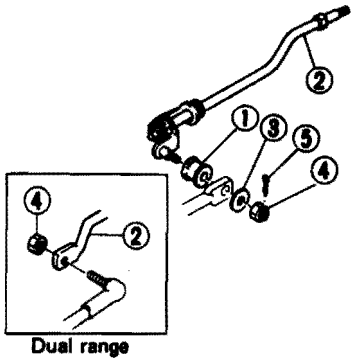

1 Bushing
2 Rod A
3 Washer
4 Self-locking nut
5 Cotter pin

Fig. 6-232

Downloaded from www.Manualslib.com manuals search engine

a. Insert rod A from the right side of transfer rail.
b. Use new self-locking nut.

4WD	5 – 9 N·m (0.5 – 0.9 kg-m, 3.6 – 6.5 ft-lb)
4WD dual-range	23 – 36 N·m (2.3 – 3.7 kg-m, 17 – 27 ft-lb)

c. Be sure to bend cotter pin ends.

NOTE:
Before installation, set the transfer rail at the frontmost position (i.e. 4WD is engaged).

2) Apply grease to transmission bushing. Install dust seal to transmission and fix it with clip.

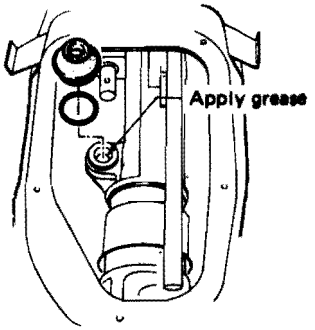

A19-103

Fig. 6-233 Installing dust seal

3) Install lever to shifter rod.

NOTE:
a. Before installation, set the shifter rod in the 3rd-gear position.
b. Drive the spring pin in securely.
c. Be sure to bend cotter pin ends.

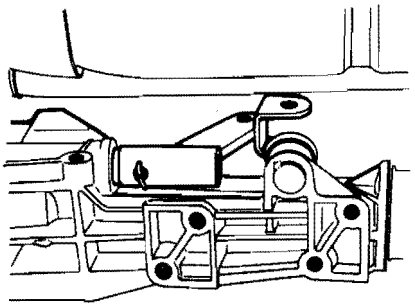

A19-155

Fig. 6-234

4) Install gearshift lever.
(Use new self-locking nut.)

Torque (Self-locking nut)	14 – 22 N·m (1.4 – 2.2 kg-m, 10 – 16 ft-lb)

NOTE:
Insert the dust seal upper end into the groove of lever firmly.

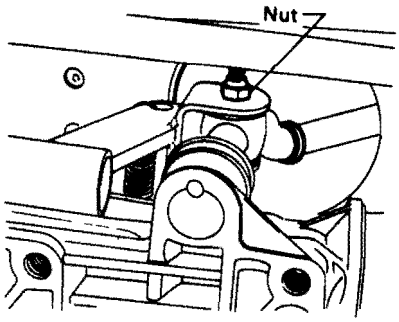

A4-142

Fig. 6-235

5) Install neutral set spring.
6) Install boot and plate to gearshift lever, and then insert rod A into boot.

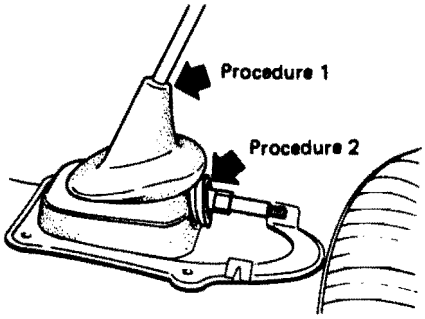

A19-105

Fig. 6-236

7) Install plate to body so as to fix boot to body.
8) Install lock nut and knob to gearshift lever.
(Set knob so that the shift pattern matches with the movement of lever. Then tighten lock nut.)

Torque (Nut)	2.9 – 4.9 N·m (0.30 – 0.50 kg-m, 2.2 – 3.6 ft-lb)

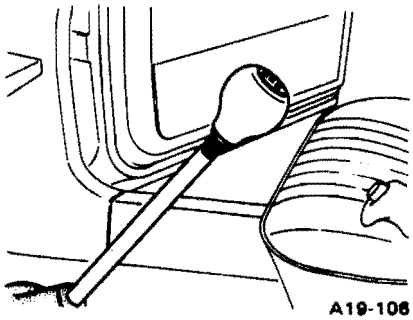

A19-106

Fig. 6-237

9) Connect rod A with rod B by tightening nut while holding rod A with a wrench.

Torque (Nut)	39 – 49 N·m (4.0 – 5.0 kg-m, 29 – 36 ft-lb)

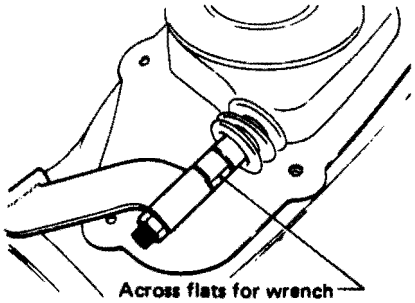

A19-107

Fig. 6-238

10) Install plate to body as follows.
a. Confirm that transfer rail is set at the frontmost position.
b. Align the hole of plate and notch on drive selector lever, and insert 8 mm (0.31 in) dia. pin to fix them.

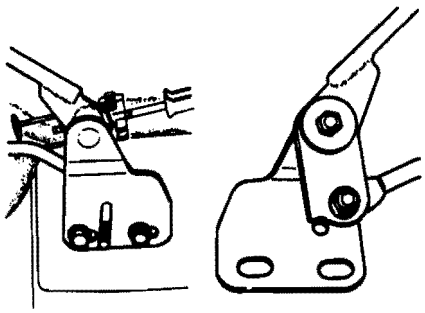

A19-108

Fig. 6-239

Downloaded from www.Manualslib.com manuals search engine

c. Install plate to body.

Torque	20 – 29 N·m (2.0 – 3.0 kg-m, 14 – 22 ft-lb)

d. Pull out 8 mm (0.31 in) dia. pin.

11) Make sure that gearshift lever and drive selector lever can be operated smoothly in their full stroke.

12) Install rod cover etc.

NOTE:
For dual-range, confirm that the distance between grip lower surface of drive selector lever and rod cover upper surface is approx. 40 mm (1.57 in). If without specification, readjust plate position. [Readjust plate position without the pin [8 mm (0.31 in) dia.] in case of need.]

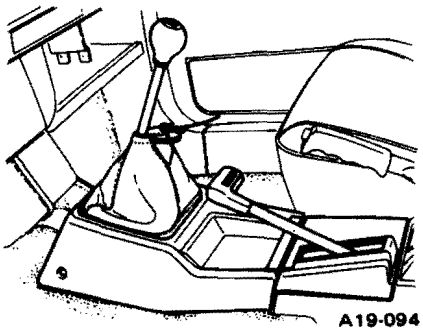

Fig. 6-240

13) Install exhaust system.

Downloaded from www.Manualslib.com manuals search engine

6-5. Troubleshooting

1. Clutch

Condition	Possible cause and testing	Corrective action
1. Clutch slippage	It is hard to perceive clutch slippage in the early stage, but pay attention to the following symptoms. (a) Engine revs up when shifting. (b) High speed driving is impossible; especially rapid acceleration impossible and vehicle speed does not increase in proportion to an increase in engine speed. (c) Power falls, particularly when ascending a slope, and there is a smell of burning of the clutch facing. • Method of testing: Put the car in stationary condition with parking brake fully applied. Disengage the clutch and shift the transmission gear into the first. Gradually allow the clutch to engage while gradually increasing the engine speed. The clutch function is satisfactory if the engine stalls. However, the clutch is slipping if the car does not start off and the engine does not stall.	
	(a) No clutch pedal play	Readjust.
	(b) No release fork end play	Readjust.
	(c) Clutch facing smeared by oil	Replace.
	(d) Worn clutch facing	Replace.
	(e) Deteriorated diaphragm spring	Replace.
	(f) Distorted pressure plate or flywheel	Correct or replace.
	(g) Defective release bearing holder	Correct or replace.
	(h) Defective pedal and cable system	Correct or replace.
2. Clutch drags	As a symptom of this trouble, a harsh scratching noise develops and control becomes quite difficult when shifting gears. The symptom becomes more apparent when shifting into the first gear. However, because much trouble of this sort is due to defective synchronization mechanism, carry out the test as described after. • Method of testing: Refer to diagnostic diagram on page after.	
	It may be judged as insufficient disengagement of clutch if any noise occurs during this test.	
	(a) Excessive clutch pedal play	Readjust.
	(b) Excessive clutch release fork play	Readjust.
	(c) Worn or rusty clutch disc hub spline	Replace clutch disc.
	(d) Excessive deflection of clutch disc facing	Correct or replace.
	(e) Seized crankshaft pilot needle bearing	Replace.
	(f) Malfunction of pedal and cable system	Correct or replace.
	(g) Cracked clutch disc facing	Replace.
	(h) Sticked clutch disc (smeared by oil or water)	Replace.

Downloaded from www.Manualslib.com manuals search engine

Condition	Possible cause and testing	Corrective action
3. Clutch chatters	Clutch chattering is an unpleasant vibration to the whole body when the vehicle is just started with clutch partially engaged.	
	(a) Improper clutch cable routing	Correct.
	(b) Adhesion of oil on the facing	Replace clutch disc.
	(c) Weak or broken torsion spring	Replace clutch disc.
	(d) Defective facing contact or excessive disc deflection	Replace clutch disc.
	(e) Warped pressure plate or flywheel	Correct or replace.
	(f) Loose disc rivets	Replace clutch disc.
	(g) Loose engine mounting	Retighten or replace mounting.
	(h) Improper adjustment of pitching stopper	Adjustment.
4. Noisy clutch	Examine whether the noise is generated when the clutch is disengaged, engaged, or partially engaged.	
	(a) Broken, worn or unlubricated release bearing	Replace release bearing.
	(b) Insufficient lubrication of pilot bearing	Apply grease.
	(c) Loose clutch disc hub	Replace clutch disc.
	(d) Loose torsion spring retainer	Replace clutch disc.
	(e) Deteriorated or broken torsion spring	Replace clutch disc.
5. Clutch grabs	When starting the vehicle with the clutch partially engaged, the clutch engages suddenly and the car jumps instead of making a smooth start.	
	(a) Grease or oil on facing	Replace clutch disc.
	(b) Deteriorated cushioning spring	Replace clutch disc.
	(c) Worn or rusted spline of clutch disc or main shaft	Take off rust, apply grease or replace clutch disc or mainshaft.
	(d) Deteriorated or broken torsion spring	Replace clutch disc.
	(e) Loose engine mounting	Retighten or replace mounting.
	(f) Deteriorated diaphragm spring	Repalce.

Downloaded from www.Manualslib.com manuals search engine

Diagnostic Diagram of Clutch Drags

Test (1)

Disengage the clutch and shift quickly from neutral to reverse in idling condition

↓

Gear noise → No → Sufficient disengagement of clutch

↓ Yes

Test (2)

Shift to reverse after 0.5 to 1.0 sec of clutch disengagement.

↓

Gear noise → No → Defective transmission or excessive clutch drag torque

[Cause]

1. Defective pilot bearing
2. Excessive disc deflection
3. Defective transmission
4. Defective clutch disc hub spline

↓ Yes

Test (3)

Shift the gear N ⇄ R several times during disengaging clutch as test (2)

↓

Gear noise → No → Sticked clutch disc

[Cause]

1. Clutch disc smeared by oil
2. Clutch disc smeared by rust
3. Defective clutch disc hub spline

↓ Yes

Clutch drags

[Cause]

1. Cracked clutch disc facing
2. Damaged or worn clutch cover
3. Malfunction of clutch release system
4. Insufficient clutch release amount
5. Excessive clutch pedal play

Downloaded from www.Manualslib.com manuals search engine

2. Manual Transmission and Differential

Condition and possible cause	Corrective action
1. Gears are difficult to intermesh. The cause for difficulty in shifting gears can be classified into two kinds: one is malfunction of the gear shift system and the other is malfunction of the transmission. However, if the operation is heavy and engagement of the gears is difficult, defective clutch disengagement may also be responsible. Check whether the clutch is correctly functioning, before checking the gear shift system and transmission.	
(a) Worn, damaged or burred chamfer of internal spline of sleeve and reverse driven gear.	Replace.
(b) Worn, damaged or burred chamfer of spline of gears.	Replace.
(c) Worn or scratched bushings.	Replace.
(d) Incorrect contact between synchronizer ring and gear cone or wear.	Correct or replace.
2. Gear slips out. (1) Gear slips out when coasting on rough road. (2) Gear slips out during acceleration.	
(a) Defective pitching stopper adjustment.	Adjust.
(b) Loose engine mounting bolts.	Tighten or replace.
(c) Worn fork shifter, broken shifter fork rail spring.	Replace.
(d) Worn or damaged ball bearing.	Replace.
(e) Excessive clearance between splines of synchronizer hub and synchronizer sleeve.	Replace.
(f) Worn tooth step of synchronizer hub (responsible for slip-out of 3rd gear).	Replace.
(g) Worn 1st driven gear, needle bearing and race.	Replace.
(h) Worn 2nd driven gear, needle bearing and race.	Replace.
(i) Worn 3rd drive gear and bushing.	Replace.
(j) Worn 4th drive gear and bushing.	Replace.
(k) Worn reverse idler gear and bushing.	Replace.
3. Unusual noise from transmission. If an unusual noise is heard when the car is parked with its engine idling and if the noise ceases when the clutch is disengaged, it may be considered that the noise comes from the transmission.	
(a) Insufficient or improper lubrication.	Lubricate or replace with specified oil.
(b) Worn or damaged gears and bearings. (NOTE) If the trouble is only wear of the tooth surfaces, merely a high roaring noise will occur at high speeds, but if any part is broken, rhythmical knocking sound will be heard even at low speeds.	Replace.

Downloaded from www.Manualslib.com manuals search engine

Condition and possible cause	Corrective action
4. Broken differential (case, gear, bearing, etc.) Abnormal noise will develop and finally it will become impossible to continue to run due to broken pieces obstructing the gear revolution.	
(a) Insufficient or improper oil. (b) Use of vehicle under severe conditions such as excessive load and improper use of clutch.	Disassemble differential and replace broken components and at the same time check other components for any trouble, and replace if necessary.
(c) Improper adjustment of taper roller bearing. (d) Improper adjustment of drive pinion and crown gear.	Readjust bearing preload and backlash and face contact of gears.
(e) Excessive backlash due to worn differential side gear, washer (35.1 x 45 x t mm) or differential pinion. (f) Loose crown gear clamping bolts.	Add recommended oil to specified level. Do not use vehicle under severe operating conditions.
5. Differential and hypoid gear noises. Troubles of the differential and hypoid gear always appear as noise problems. Therefore noise is the first indication of the trouble. However noises from the engine, muffler, tire, exhaust gas, bearing, body, etc. are easily mistaken for the differential noise. Pay special attention to the hypoid gear noise because it is easily confused with other gear noises. There are following four kinds of noises. (1) Gear noise when driving: If noise increases as vehicle speed increases it may be due to insufficient gear oil, incorrect gear engagement, damaged gears, etc. (2) Gear noise when coasting: Damaged gears due to maladjusted bearings and incorrect shim adjustment. (3) Bearing noise when driving or when coasting: Cracked, broken or damaged bearings. (4) Noise which mainly occurs when turning: Unusual noise from differential side gear, differential pinion, differential pinion shaft, etc.	
(a) Insufficient oil	Lubricate.
(b) Improper adjustment of crown gear and drive pinion.	Check tooth contact.
(c) Worn teeth of crown gear and drive pinion.	Replace in a set.
(d) Loose roller bearing (35 x 72 x 18.25)	Readjust bearing preload. Readjust crown gear to drive pinion backlash and check tooth contact.
(e) Distorted crown gear or differential case.	Replace.
(f) Worn washer (35.1 x 45 x t) and differential pinion shaft.	Replace.

Downloaded from www.Manualslib.com manuals search engine

6-6. Special Tools

1. Clutch

499747000	899754112		
Guide	Press		
Clutch disc	Clutch release bearing holder		
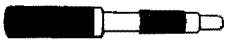 *Fig. 6-241* A11-014	*Fig. 6-242* A11-025		

Downloaded from www.Manualslib.com manuals search engine

2. Manual Transmission and Differential

399295120	899714110	899904100	899874100
Stand Set	Retainer	Remover	Installer
Transmission main case	Transmission main shaft, Drive pinion Rear drive shaft	Straight pin (Differential)	Transmission main shaft, Drive pinion, Transfer drive gear bushing
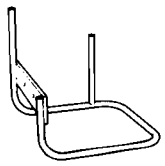 *Fig. 6-243* A12-169	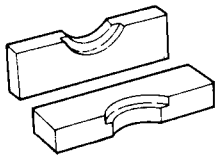 *Fig. 6-247* A12-181	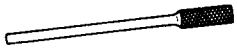 *Fig. 6-251* A12-187	*Fig. 6-255* A12-185
399780111	899858600	899524100	899754110
Wrench	Retainer II	Puller Set	Press Assembly
Axle shaft oil seal holder	Transmission main shaft, Drive pinion	Roller bearing (Differential)	Transmission main shaft Needle bearing (transfer case), Rear drive shaft
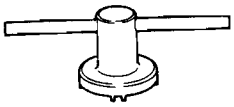 *Fig. 6-244* A12-168	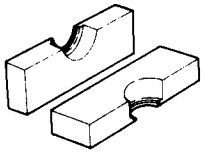 *Fig. 6-248* A12-183	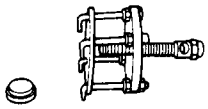 *Fig. 6-252* A5-142	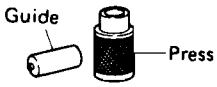 *Fig. 6-256* A12-182
899474100	899984103	399520105	899278600
Expander	Socket Wrench	Seat	Installer
Snap ring (Transmission main shaft)	Drive pinion lock nut (4-speed, 5-speed)	Roller bearing (Differential)	Drive pinion
Fig. 6-245 A12-178	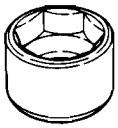 *Fig. 6-249* A12-190	*Fig. 6-253* A12-171	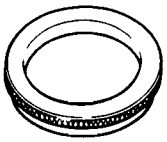 *Fig. 6-257* A12-177
899864100	899884100	899580100	498247001
Remover	Holder	Installer	Magnet Base
Transmission main shaft, Drive pinion	Drive pinion, Rear drive shaft Extension assembly	Transmission main shaft, Drive pinion, Ball bearing (Rear drive shaft)	Backlash between side gear and pinion, Hypoid gear backlash
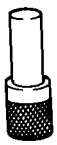 *Fig. 6-246* A12-184	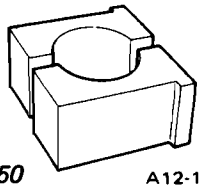 *Fig. 6-250* A12-186	*Fig. 6-254* A12-179	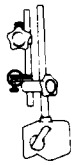 *Fig. 6-258* ST-156

Downloaded from www.Manualslib.com manuals search engine

498247100	399780104	499277000	398405200
Dial Gauge	Weight	Installer	Stand
Backlash between side gear and pinion, Hypoid gear backlash	Preload on roller bearing	Drive pinion	Rear drive shaft
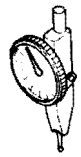 *Fig. 6-259* ST-157	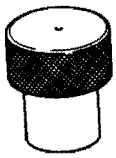 *Fig. 6-263* A12-172	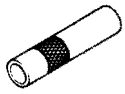 *Fig. 6-267* A12-296	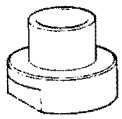 *Fig. 6-271* ST-144
399790110	498147000	399411700	499927000
Installer	Depth Gauge	Installer	Handle
Roller bearing, (Differential) Axle shaft oil seal	Main shaft axial end play adjustment	Reverse shifter rail arm	Transmission main shaft input shaft
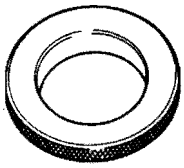 *Fig. 6-260* A12-175	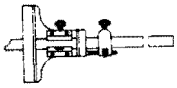 *Fig. 6-264* ST-146	*Fig. 6-268* A12-170	*Fig. 6-272* A12-189
899914100	899988608	398791600	499267000
Gauge Assembly	Socket Wrench	Remover II	Stopper Pin
Drive pinion shim	Transmission main shaft, Rear drive shaft (4WD)	Straight pin (Transfer shifter fork)	High-low shifter rail
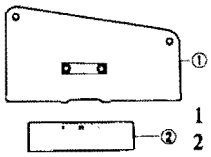 1 Plate 2 Scale *Fig. 6-261* A12-188	*Fig. 6-265* A12-191	*Fig. 6-269* A12-174	*Fig. 6-273* A12-401
499827000	898938600	398791700	499167000
Press	Holder	Remover II	Stopper Assembly
Oil seal (Speedometer)	Transmission main shaft	Spring pin (5-speed)	High-low shifter rod and main case
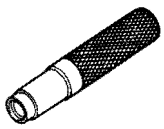 *Fig. 6-262* ST-147	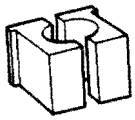 *Fig. 6-266* A12-176	*Fig. 6-270* A12-174	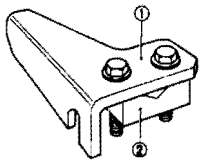 1 Bracket (499167001) 2 Holder (499167002) *Fig. 6-274* A12-402

Downloaded from www.Manualslib.com manuals search engine

498787000	499257000		
Stopper	Guide		
Transmission main shaft	Main shaft snap ring		
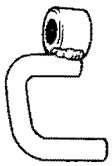 *Fig. 6-275* A12-173	*Fig. 6-279* A12-400		
499987003	398507703		
Socket Wrench	Dummy Collar		
Drive pinion (4WD)	Oil seal of input shaft holder		
Fig. 6-276 A12-191	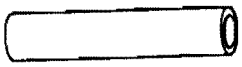 *Fig. 6-280* A14-082		
398663600	499917100		
Pliers	Gauge Ass'y 2		
Input shaft snap ring	Drive pinion shim		
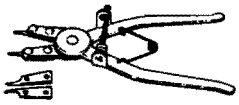 *Fig. 6-277* A13-205	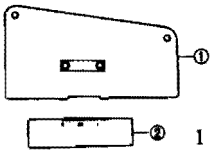 1 Plate 2 Scale *Fig. 6-281* A12-188		
498517000			
Replacer			
Drive pinion thrust plate and needle bearing race			
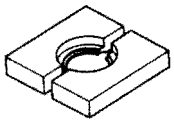 *Fig. 6-278* ST-151			

Downloaded from www.Manualslib.com manuals search engine

CHAPTER 7

AUTOMATIC TRANSMISSION AND DIFFERENTIAL

		Page
7–1.	SPECIFICATIONS AND SERVICE DATA	7– 2
	1. Specifications	7– 2
	2. Service Data	7– 4
7–2.	AUTOMATIC TRANSMISSION AND DIFFERENTIAL	7– 9
	1. Cross Sectional View	7– 9
	2. Construction and Operation	7–11
	3. Component Parts	7–20
	4. Troubleshooting and On-car Service	7–28
	5. Dismounting	7–41
	6. Disassembly, Inspection and Assembly	7–42
	7. Remounting	7–68
7–3.	TRANSMISSION CONTROL SYSTEM	7–72
	1. Component Parts	7–72
	2. Removal	7–73
	3. Disassembly	7–73
	4. Inspection	7–73
	5. Assembly	7–73
	6. Installation	7–75
7–4.	SPECIAL TOOLS	7–77
	1. Special Tools for Differential	7–77
	2. Special Tools for Transmission	7–80

SUBARU

Downloaded from www.Manualslib.com manuals search engine

7-1. Specifications and Service Data

1. Specifications

			Non-4WD	4WD
Torque converter	Type		Symmetric, 3-element, single stage, 2-phase torque converter coupling	
	Stall torque ratio		2:1	
	Nominal diameter		236 mm (9.29 in)	
	Stall speed		2,100 – 2,300 rpm	
	One-way clutch		Sprag type one-way clutch	
Automatic transmission	Transmission	Type	3-forward, 1-reverse, multiple planetary gear transmission	
		Control element	Multi-disc clutch	2 sets
			Multi-disc brake	1 set
			Band brake	1 set
			One-way clutch	1 set
		Reduction gear ratio	1st	2.600
			2nd	1.505
			3rd	1.000
			Reverse	2.167
		Tooth number of planetary gear	Reverse sun gear	36
			Forward sun gear	30
			Short pinion	20
			Long pinion	21
			Output gear	78
		Selector position	P (park)	Transmission in neutral, output shaft immovable, and engine start possible.
			R (reverse)	Transmission in reverse for backing.
			N (neutral)	Transmission in neutral, and engine start possible.
			D (drive)	Automatic gear change 1st ↔ 2nd ↔ 3rd (Forward)
			2 (second)	2nd gear locked.
			1 (first)	Deceleration from 2nd to 1st (1st gear locked).
		Control method	Hydraulic remote control	
	Oil pump	Type	Internal involute gear pump	
		Number	1 unit	
		Drive system	Engine drive	

Downloaded from www.Manualslib.com manuals search engine

				Non-4WD	4WD
Automatic Transmission (continued)	Hydraulic control	Type		Automatic shift control over 3 forward speeds based on intake-manifold vacuum and output shaft speed	
		Fluid		Automatic transmission fluid (ATF) TEXACO : Texamatic Fluid 6673 Dexron CALTEX : Texamatic Fluid 6673 Dexron CASTROL : Castrol TQ Dexron BP : BP Autran Dexron MOBIL : Mobil ATF 220	
		Fluid capacity		5.6 – 6.0ℓ (5.9 – 6.3 US qt, 4.9 – 5.3 Imp qt)	6.0 – 6.4ℓ (6.3 – 6.8 US qt, 5.3 – 5.6 Imp qt) (Including transfer section)
	Lubrication	Lubrication system		Forced feed lubrication with oil pump	
		Oil		Automatic transmission fluid (above-mentioned)	
	Cooling	Cooling system		Liquid-cooled oil cooler incorporated in radiator	
Transfer section	Transfer gear ratio			–	0.948 (37/39)
	Transfer clutch			–	Hydraulic multi-disc clutch
	Control method			–	Hydraulic remote control
	Lubricant			–	The same Automatic transmission fluid used in Automatic transmission
Final reduction mechanism	1st reduction gear ratio			0.974 (38/39)	1.026 (39/38)
	2nd reduction gear ratio		Front drive	3.700 (37/10)	
			Rear drive	3.900 (39/10)	
	Governor gear ratio			1.090 (12/11)	
	Speedometer gear ratio			3.181 (35/11)	3.272 (36/11)
	Lubricating oil			API. GL-5, 75W–80	
	Oil capacity		Front drive	1.2ℓ (1.3 US qt, 1.1 Imp qt)	
			Rear drive	–	0.8ℓ (0.8 US qt, 0.7 Imp qt)

Downloaded from www.Manualslib.com manuals search engine

2. Service Data

1) Service Standard Value

Measuring location				Standard value
Idling speed (N or P position)				800 ± 100 rpm
Stall speed				2,100 – 2,300 rpm
Brake band adjusting screw				Turning screw back two turns after tightening it to the torque of 9 N·m (0.9 kg-m, 6.5 ft-lb)
Axial clearance between governor cover and governor body				0.2 – 0.8 mm (0.008 – 0.031 in)
Clutch	Forward/Reverse clutch	Facing	Thickness	1.6 mm (0.063 in)
			Number	4 (Forward clutch)
				3 (Reverse clutch)
		Steel plate	Thickness	2.0 mm (0.079 in)
			Number	4 (Forward clutch)
				3 (Reverse clutch)
		Dish plate	Thickness	1.8 mm (0.071 in)
			Warping	1.2 mm (0.047 in)
		Clutch clearance	Forward clutch	1.0 – 1.5 mm (0.039 – 0.059 in)
			Reverse clutch	1.6 – 1.8 mm (0.063 – 0.071 in)
	Low and reverse brake clutch	Facing	Thickness	2.3 mm (0.091 in)
			Number	4
			Wave height	0.18 mm (0.0071 in)
		Steel plate	Thickness	1.8 mm (0.071 in)
			Number	4
		Clutch clearance		0.5 – 1.2 mm (0.020 – 0.047 in)
	Transfer clutch	Facing	Thickness	2.9 mm (0.114 in)
			Number	3
		Steel plate	Thickness	1.8 mm (0.071 in)
			Number	2
		Clutch clearance		0.4 – 0.8 mm (0.016 – 0.031 in)
Oil pump	Clearance between inner/outer gear and transmission cover			0.02 – 0.04 mm (0.0008 – 0.0016 in)
	Clearance between cresent and tooth tip of outer gear			0.14 – 0.21 mm (0.0055 – 0.0083 in)
	Radial clearance between outer gear and oil pump carrier			0.05 – 0.20 mm (0.0020 – 0.0079 in)
	Clearance between seal ring and groove			0.04 – 0.16 mm (0.0016 – 0.0063 in)
Clearance between planetary carrier and planetary pinion washer				0.15 – 0.60 mm (0.0059 – 0.0236 in)

Downloaded from www.ManualsLib.com manuals search engine

Measuring location		Standard value
Clearance between manual plate and spacer		0.3 mm or less (0.012 in or less)
Clearance between rear shaft and intermediate case		0 – 0.3 mm (0 – 0.012 in)
End play	Total axial end play	0.25 – 0.50 mm (0.0098 – 0.0197 in)
	Reverse clutch drum end play	0.50 – 0.80 mm (0.0197 – 0.0315 in)
Run-out at the tip of reduction drive gear shaft		0.08 mm or less (0.0031 in or less)
Starting friction torque of drive pinion		1.23 – 1.62 N·m (12.5 – 16.5 kg-cm, 10.9 – 14.3 in-lb)
Distance from the final reduction case face to the end face of the reduction drive gear		19.6 – 19.8 mm (0.772 – 0.780 in)
Run-out of converter drive plate surface		0.5 mm or less (0.020 in or less)

2) Automatic Shift Characteristics (Non-4WD)

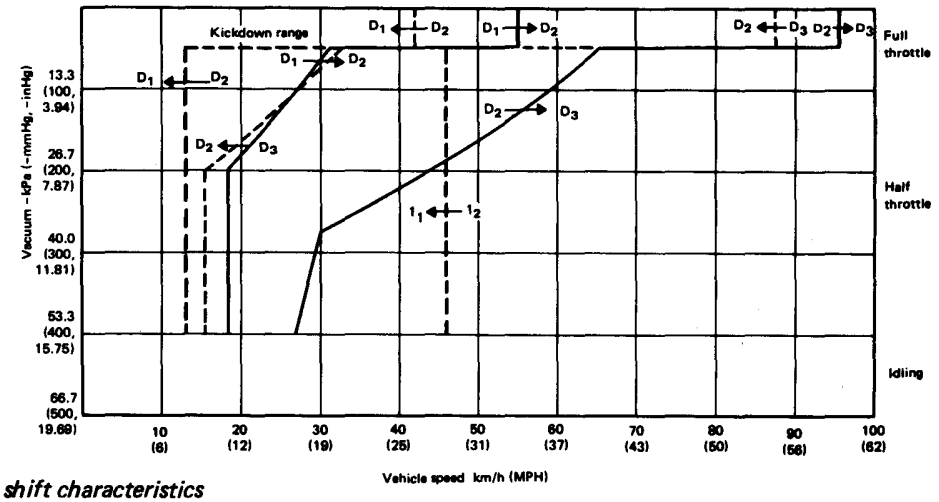

Fig. 7-1 Automatic shift characteristics

A13-254

3) Line Pressure

1) Line pressure characteristics

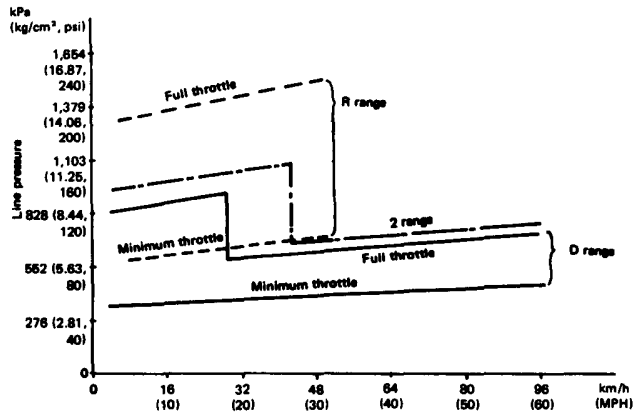

Fig. 7-2 Line pressure characteristics

A13-220

Downloaded from www.Manualslib.com manuals search engine

2) Line pressure in each range

Unit: kPa (kg/cm², psi)

Throttle / Range	Full-throttle [-4.0 – -6.7 kPa (-30 – -50 mmHg, -1.18 – -1.97 inHg)]		Minimum-throttle [-57.3 – -60.0 kPa (-430 – -450 mmHg, -16.93 – -17.72 inHg)]	
	before cut-down	after cut-down	before cut-down	after cut-down
D	834 – 981 (8.5 – 10.0, 121 – 142)	539 – 637 (5.5 – 6.5, 78 – 92)	294 – 392 (3.0 – 4.0, 43 – 57)	294 – 392 (3.0 – 4.0, 43 – 57)
2	1,000 – 1,157 (10.2 – 11.8, 145 – 168)	579 – 677 (5.9 – 6.9, 84 – 98)	1,000 – 1,157 (10.2 – 11.8, 145 – 168)	579 – 677 (5.9 – 6.9, 84 – 98)
R	1,373 – 1,569 (14.0 – 16.0, 199 – 228)		461 – 559 (4.7 – 5.7, 67 – 81)	

NOTE:

a. Line pressures in each of D, 2 and R ranges will change in steps at certain points (where pressure modifier valve functions) and these points are called "Cut-down point". "Before cut-down" stated in the above table implies slow driving condition [less than 15.3 km/h (9.5 MPH)] and "after cut-down" implies the vehicle speed of more than 35.4 km/h (22.0 MPH).

b. The line pressure during idling of the engine corresponds to the oil pressure before cut-down operation with the minimum throttle.

3) Change of line pressure with intake manifold vacuum (N, D ranges)

Intake manifold vacuum: -kPa (-mmHg, -inHg)	Line pressure: kPa (kg/cm², psi)
37.3 (280, 11.02)	510 – 588 (5.2 – 6.0, 74 – 85)
40.0 (300, 11.81)	481 – 559 (4.9 – 5.7, 70 – 81)
44.0 (330, 12.99)	441 – 520 (4.5 – 5.3, 64 – 75)
46.7 (350, 13.78)	412 – 490 (4.2 – 5.0, 60 – 71)
50.7 (380, 14.96)	363 – 441 (3.7 – 4.5, 53 – 64)
53.3 (400, 15.75)	333 – 412 (3.4 – 4.2, 48 – 60)
57.3 (430, 16.93)	314 – 363 (3.2 – 3.7, 46 – 53)
60.0 (450, 17.72)	314 – 324 (3.2 – 3.3, 46 – 47)

Downloaded from www.Manualslib.com manuals search engine

4) Location and Dimension of Adjusting Parts

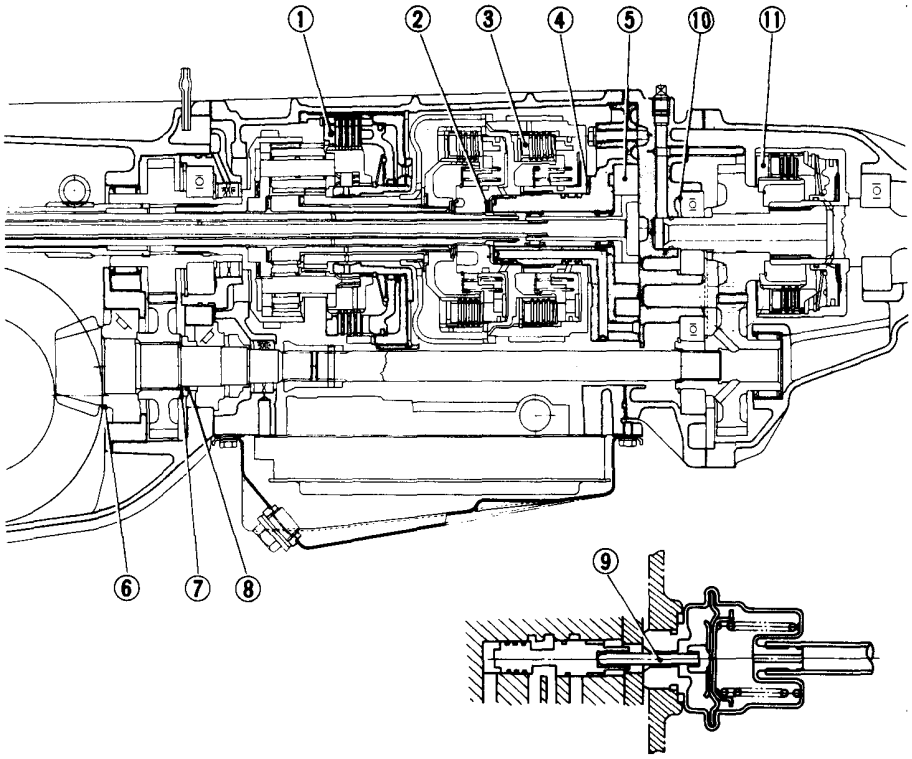

Fig. 7-3

A13-397

No.	Part Name	Part Number	Dimension mm (in)	Application
1	Retaining plate 2	444267001 – 8	7.2, 7.4, 7.6, 7.8, 8.0, 8.2, 7.0, 6.8 (0.283, 0.291, 0.299, 0.307, 0.315, 0.323, 0.276, 0.268)	Adjusting clearance of low and reverse brake
2	Washer (21 x 31.2 x t)	803021048 803021049 803021040	1.0, 1.2, 1.4 (0.039, 0.047, 0.055)	Adjusting total end play
	Washer (21 x 31.5 x t)	803021044 – 7	1.6, 1.8, 2.0, 2.2 (0.063, 0.071, 0.079, 0.087)	
3	Retaining plate	456712900 – 6	5.0, 5.2, 5.4, 5.6, 5.8, 6.0, 6.2 (0.197, 0.205, 0.213, 0.220, 0.228, 0.236, 0.244)	Adjusting clearance of reverse clutch
4	Washer	452810100 – 6	1.9, 2.1, 2.3, 2.5, 2.7, 1.5, 1.7 (0.075, 0.083, 0.091, 0.098, 0.106, 0.059, 0.067)	Adjusting end play of reverse clutch drum
5	Oil pump gear	Inner gear 434610100 – 2 Outer gear 434710100 – 2	16.00 – 15.99 (0.6299 – 0.6295) 15.99 – 15.98 (0.6295 – 0.6291) 15.98 – 15.97 (0.6291 – 0.6287)	Adjusting side clearance of oil pump
6	Shim 2	442182511 – 8	0.15, 0.175, 0.20, 0.225, 0.25 (0.0059, 0.0069, 0.0079, 0.0089, 0.0098) 0.275, 0.30, 0.50 (0.0108, 0.0118, 0.0197)	Adjusting drive pinion height
7	Shim	441967001 – 3	0.6, 0.8, 1.0 (0.024, 0.031, 0.039)	Adjusting preload of drive pinion bearing
8	Spacer	446107001 – 8	9.600, 9.625, 9.650, 9.675 (0.3780, 0.3789, 0.3799, 0.3809) 9.700, 9.725, 9.750, 9.775 (0.3819, 0.3829, 0.3839, 0.3848)	Adjusting preload of drive pinion bearing
9	Vacuum diaphragm rod	493210110 – 4	34, 34.5, 35, 35.5, 36 (1.339, 1.358, 1.378, 1.398, 1.417)	Adjusting line pressure
10	Washer (42 x 51 x t)	803242010 – 1	0.2, 0.5 (0.008, 0.020)	Adjusting end play of rear drive shaft
11	Front pressure plate	447677000 – 4	4.7, 5.0, 5.3, 5.6, 5.9 (0.185, 0.197, 0.209, 0.220, 0.232)	Adjusting clearance of transfer clutch

Downloaded from www.Manualslib.com manuals search engine

5) Backlash

Planetary gear	Forward sun gear to Short pinion	0.15 – 0.22 mm (0.0059 – 0.0087 in)
	Reverse sun gear to Long pinion	0.15 – 0.22 mm (0.0059 – 0.0087 in)
	Short pinion to Long pinion	0.15 – 0.22 mm (0.0059 – 0.0087 in)
	Long pinion to Planetary output gear	0.18 – 0.25 mm (0.0071 – 0.0098 in)
1st reduction gears		0.05 – 0.12 mm (0.0020 – 0.0047 in)
2nd reduction gears		0.13 – 0.18 mm (0.0051 – 0.0071 in)
Governor gears		0.30 – 0.81 mm (0.0118 – 0.0319 in)
Speedometer gears		0.30 – 0.81 mm (0.0118 – 0.0319 in)
Transfer gears		0.051 – 0.125 mm (0.0020 – 0.0049 in)

Downloaded from www.Manualslib.com manuals search engine

7-2. Automatic Transmission and Differential

1. Cross Sectional View

Non-4WD

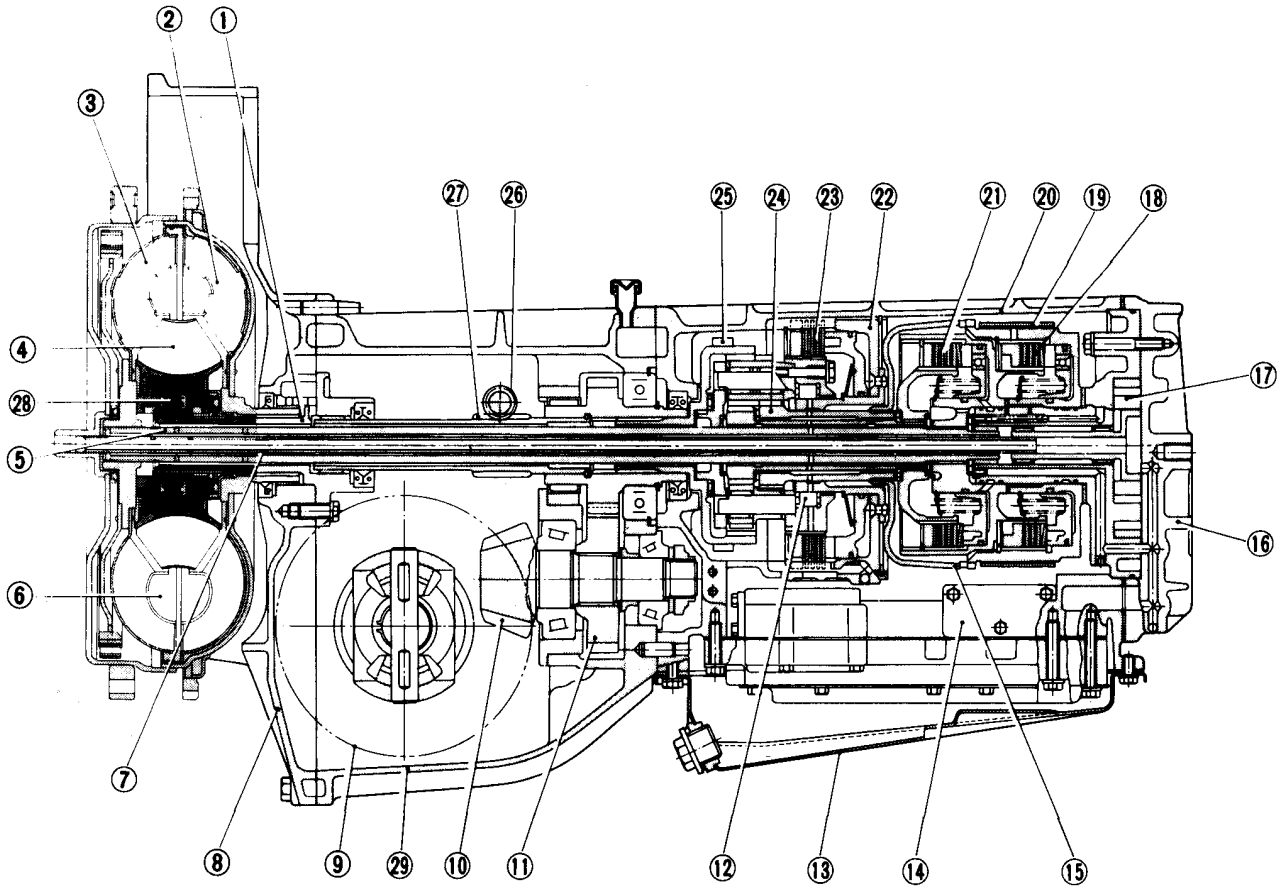

1 Stator shaft
2 Impeller
3 Turbine
4 Stator
5 Turbine shaft
6 Torque converter
7 Oil pump drive shaft
8 Converter housing
9 Crown gear
10 Drive pinion
11 Reduction gear
12 One-way clutch
13 Oil pan
14 Control valve
15 Connecting shell
16 Transmission cover
17 Oil pump
18 Reverse clutch
19 Brake band
20 Transmission case
21 Forward clutch
22 Center support
23 Low & reverse brake
24 Planetary gear
25 Parking gear
26 Governor drive shaft
27 Governor shaft
28 One-way clutch
29 Final reduction case

A13-398

Fig. 7-4

Downloaded from www.Manualslib.com manuals search engine

4WD

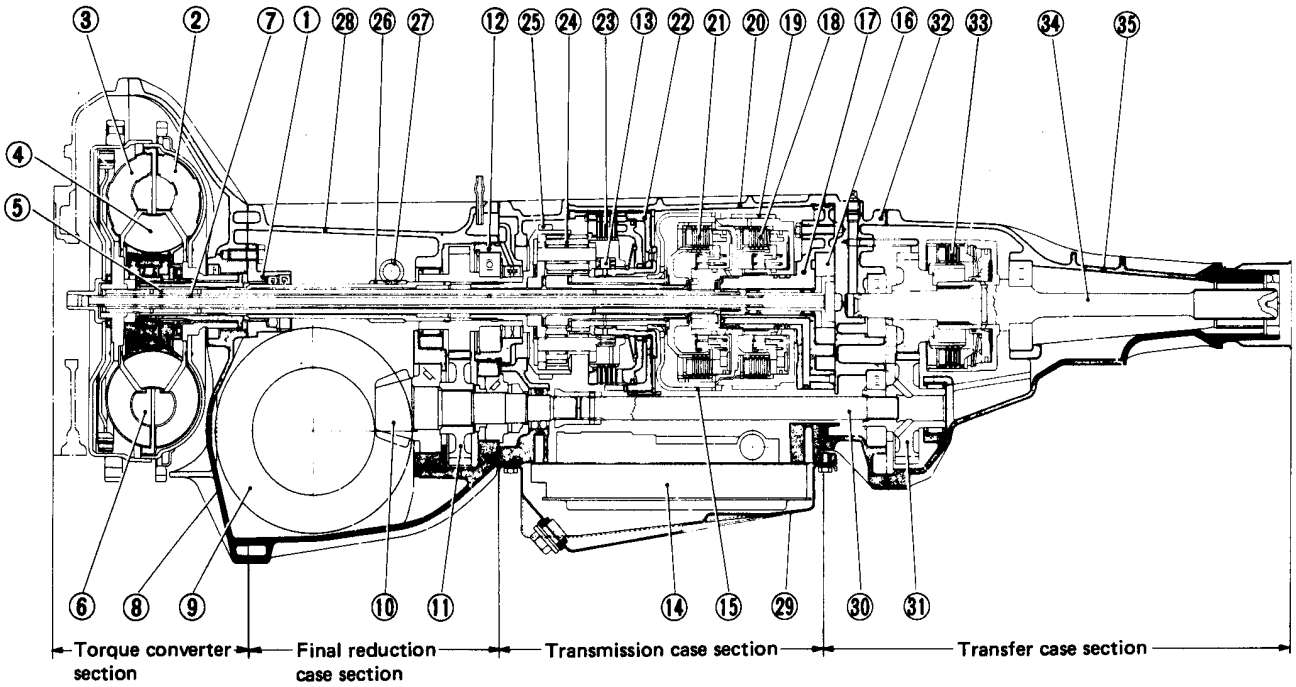

1	Stator shaft	13	One-way clutch	25	Parking gear
2	Impeller	14	Control valve	26	Speedometer & governor drive gear
3	Turbine	15	Connecting shell	27	Governor shaft
4	Stator	16	Oil pump	28	Final reduction case
5	Turbine shaft	17	Oil pump carrier	29	Oil pan
6	Torque converter	18	Reverse clutch	30	Transfer drive shaft
7	Oil pump drive shaft	19	Brake band	31	Transfer gear
8	Converter housing	20	Transmission case	32	Intermediate case
9	Crown gear	21	Forward clutch	33	Transfer clutch
10	Drive pinion	22	Center support	34	Rear drive shaft
11	Reduction gear	23	Low & reverse brake	35	Extension case
12	Oil seal holder	24	Planetary gear		

A13-399

Fig. 7-5

Downloaded from www.Manualslib.com manuals search engine

2. Construction and Operation

1 4WD AT

1. Construction

1) Overall Construction

The 4WD automatic transmission is basically composed of the conventional SUBARU 1800 automatic transmission, the transfer gear and rear wheel hydraulic driving clutch attached to the rear end of the transmission, and the hypoid pinion and transfer gear are connected by the transfer drive shaft. The transmission route of power is unchanged from that of the SUBARU 1800 4WD model (with manual transmission).

2) Front Drive Portion

The basic construction is unchanged from the current automatic transmission. Along with the adoption of a 4 wheel drive system, the final reduction case and transmission case have been changed thoroughly, and an oil seal holder has been newly introduced in the reduction drive gear portion. The hydraulic clutch, planetary gear, control valve and other elementary components of the automatic transmission section are unchanged from those of the current automatic transmission.

3) Rear Drive Portion

1) Transfer

The transfer consists of a hydraulic multi-disc clutch, transfer clutch valve and solenoid, and these units are housed in the extension case together with the transfer gear.

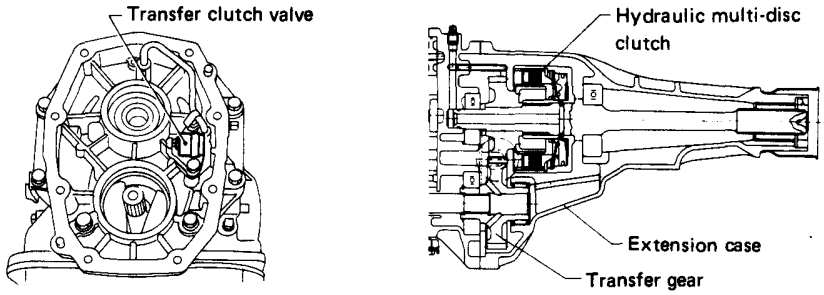

A13-400 A13-401

Fig. 7-6 Transfer

The current to the solenoid is controlled by the 4WD selector switch located on the selector lever.

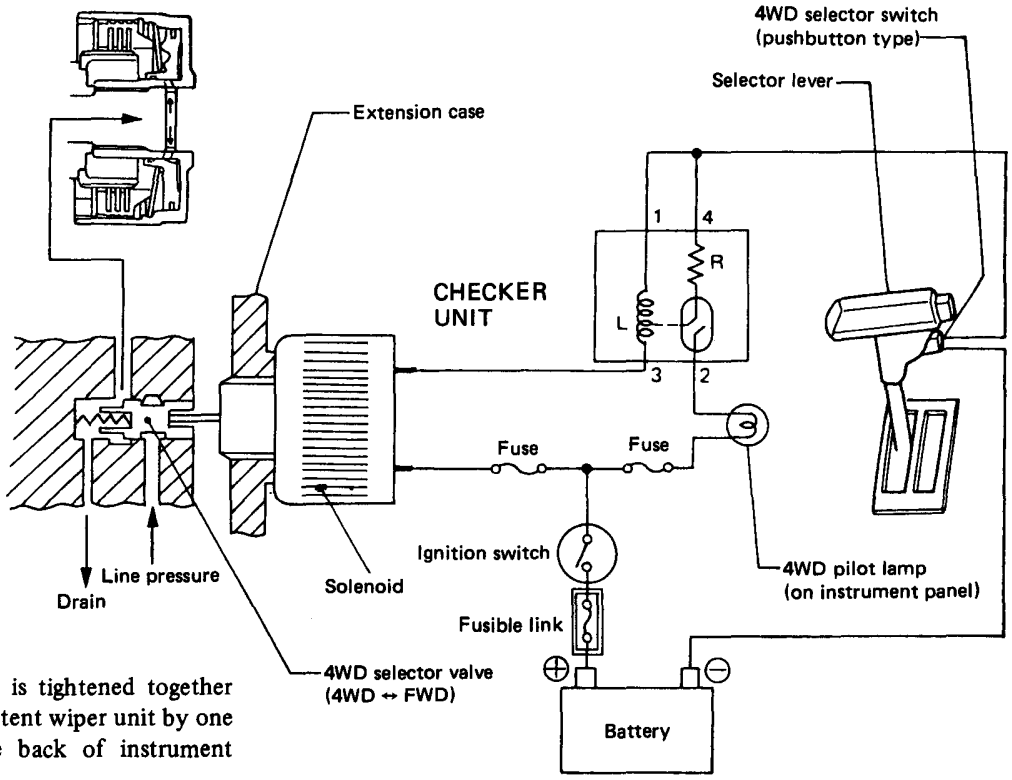

* Checker unit is tightened together with intermittent wiper unit by one screw at the back of instrument panel.

Fig. 7-7 Transfer clutch control system

A13-402

Downloaded from www.Manualslib.com manuals search engine

2) Rear differential

The rear differential is unchanged from the SUBARU 1800 4WD (manual type). The difference in gear ratio with the front side differential is adjusted by the transfer gear (gear ratio 37/39 = 0.948) so that the front and rear wheels will rotate at the same speed.

3) Transfer clutch control circuit

The transfer clutch circuit and transfer valve have been added to the line pressure circuit between the oil pump discharge side and control valve. Along with this change, the oil supply circuit to the torque converter and the lubricating circuit to the clutch and planetary gear portions have been partially modified.

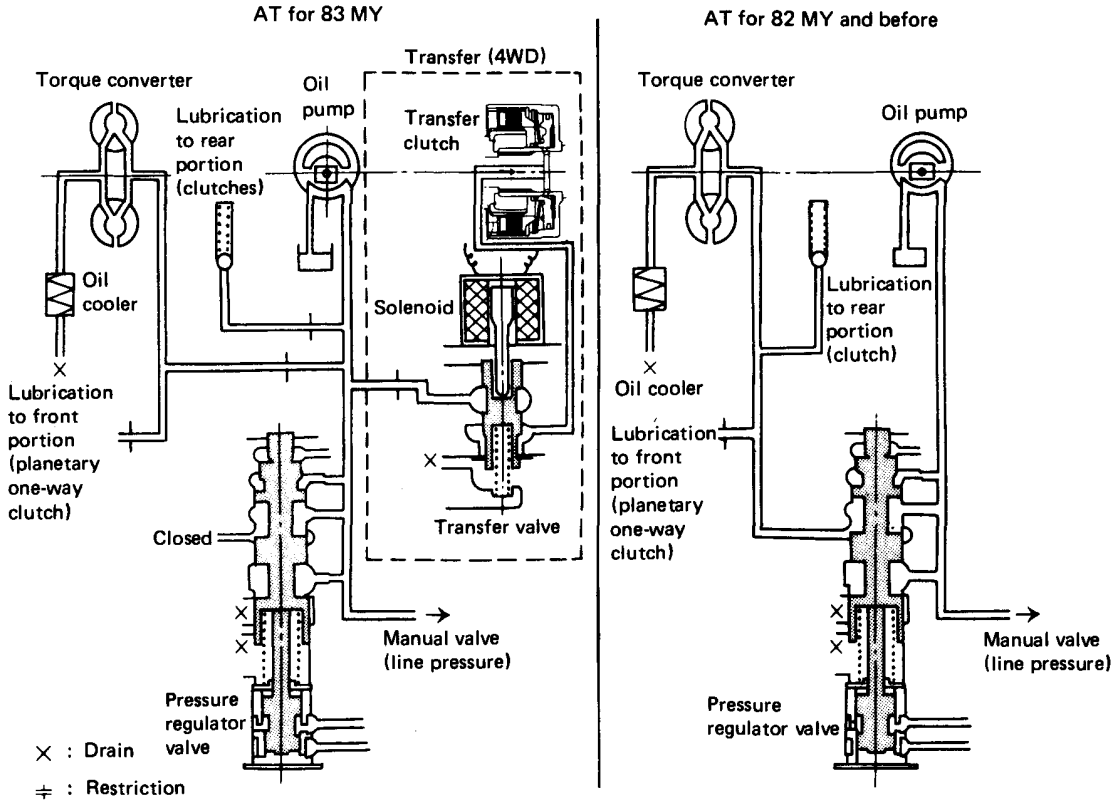

Fig. 7-8 Comparison of hydraulic circuits

4) Transfer valve

The transfer valve is an of-off valve which opens and closes the line pressure circuit to the transfer clutch, and this valve is operated by the solenoid.
In the FWD mode, the solenoid push rod and valve are set at the right side by the spring positioned on the left side, and the line pressure to the clutch is disconnected.
If the solenoid is energized by depressing of the 4WD selector switch, the push rod is activated and the valve is pressed to the left against the pressure of the spring. As the valve is moved, the transfer clutch circuit opens while the drain circuit closes, and the line pressure is led to the transfer clutch circuit to engage the transfer clutch.

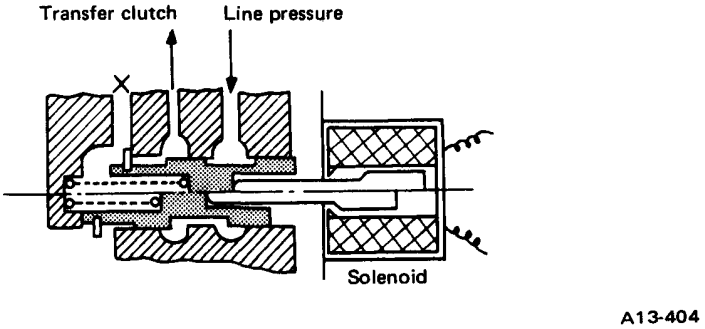

Fig. 7-9 Transfer valve

Downloaded from www.Manualslib.com manuals search engine

2. Operation

1) Front Wheel Drive (FWD)

- The line pressure to the transfer clutch is disconnected by the transfer valve, and the clutch is kept in the disconnected state.
- All power is transmitted from the transmission to the front wheels through the front hypoid gear. During operation, both the drive member and driven member of the transfer clutch are rotating at the same speed.

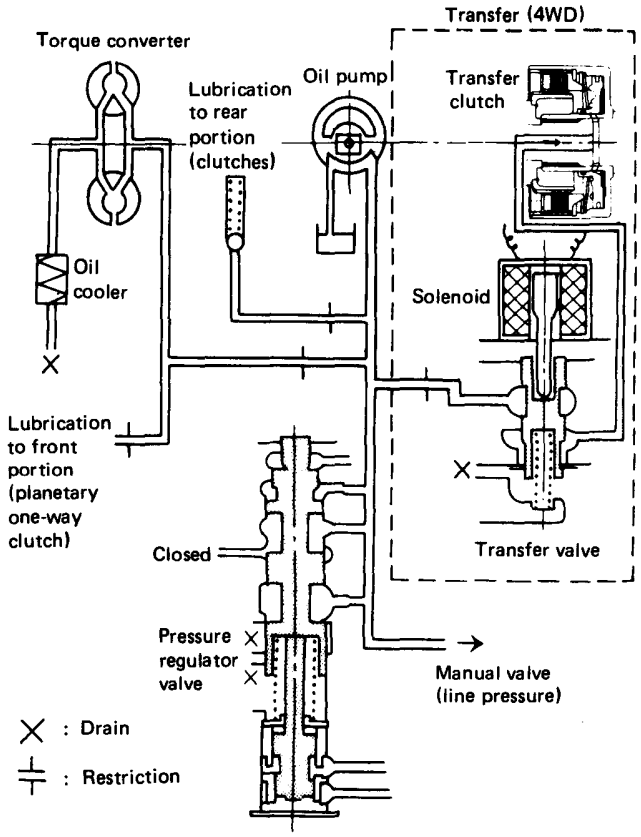

Fig. 7-10 Hydraulic circuit in FWD mode

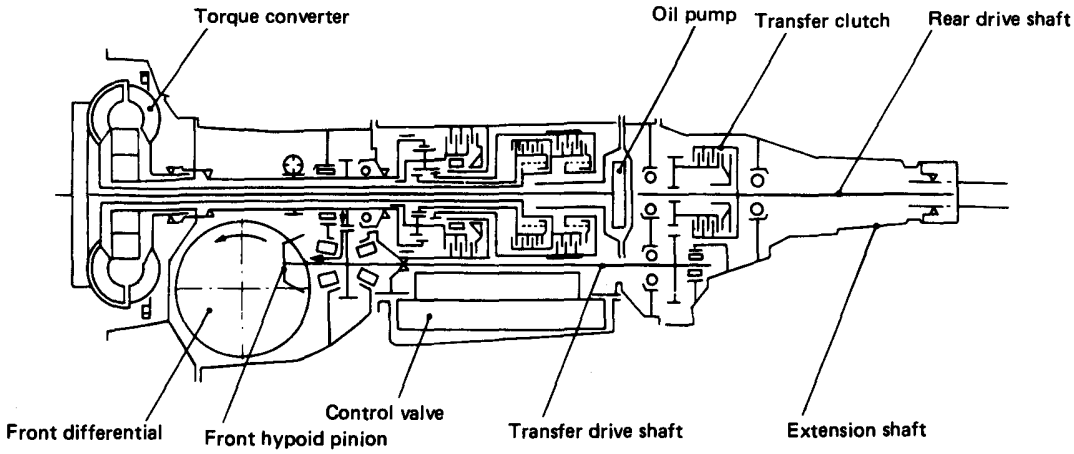

Fig. 7-11 Transmission of power in FWD mode

Downloaded from www.Manualslib.com manuals search engine

2) 4-wheel Drive (4WD)

If the pushbutton on the selector lever is set to the 4WD position from the FWD position, the transfer valve opens the circuit to the transfer clutch as the solenoid is activated, and, at the same time, the green 4WD pilot lamp illuminates on the meter panel.
The line pressure, led through; transfer pipe → intermediate case → rear drive shaft, connects the transfer clutch (hydraulic clutch).
The power is branched to the front and to the rear on the front hypoid pinion. The power branched to the rear from the shaft end of the pinion is led through; transfer drive shaft → transfer gear → transfer clutch → rear drive shaft → propeller shaft → rear differential, and transmitted to the rear wheels.

These characteristics have been established as being necessary to transmit the power from the engine to the rear wheels. If an excessive brake torque is created on the front and rear wheels in a tight cornering operation, the transfer clutch acts as a torque limitter (that is, the clutch slips), and weakens the braking torque, and also protects the driving members. As shown in the characteristic curve in the figure, the torque limiting function is more effective when the line pressure is lower (that is, when the throttle opening is smaller).

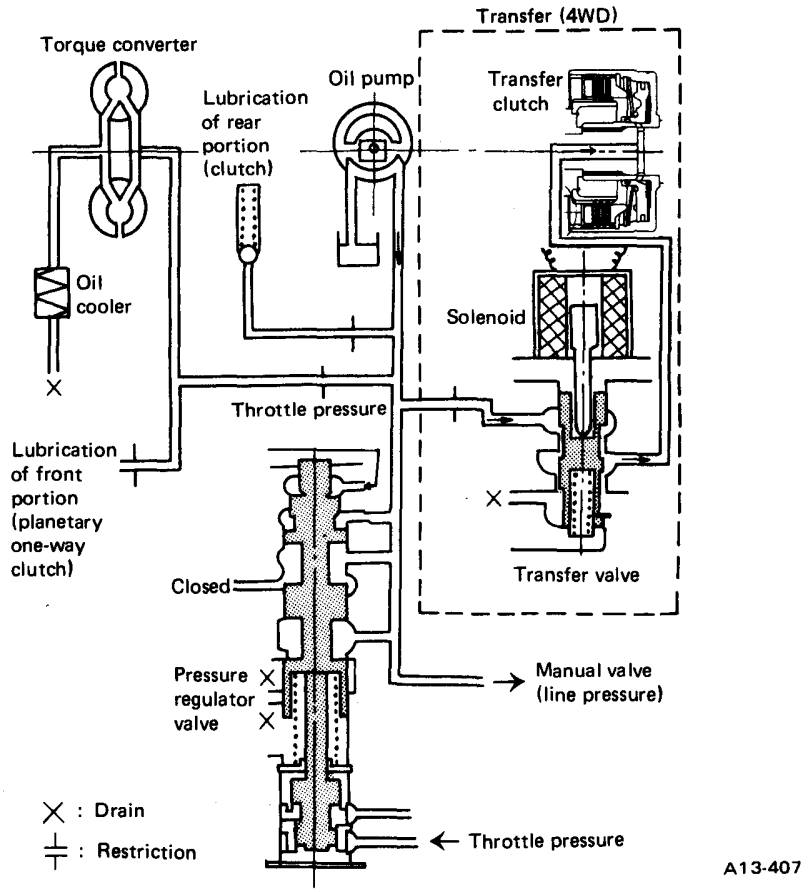

Fig. 7-12 Hydraulic circuit in 4WD mode

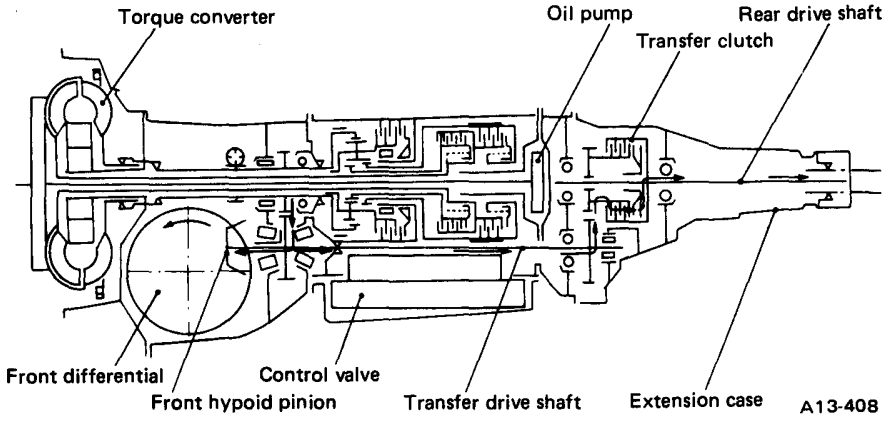

Fig. 7-13 Transmission of power in 4WD mode

3) Characteristics of Transfer Clutch

The line pressure is applied to the transfer clutch, and the clutch capacity varies, like the other hydraulic clutches, with the throttle opening and vehicle speed, as shown in the characteristic curve in the figure.

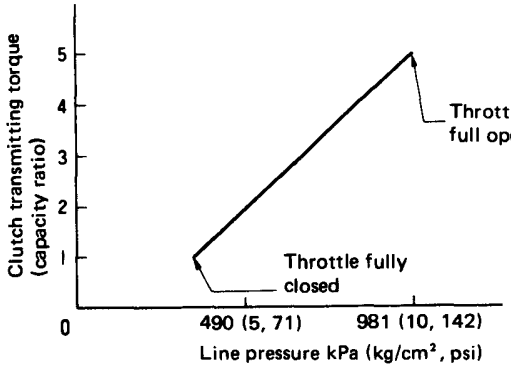

Fig. 7-14 Characteristics of the transfer clutch (before D range "cut down")

Downloaded from www.Manualslib.com manuals search engine

3. Precautions for 4WD automatic transmission

1) Be sure to use recommended automatic transmission fluid (ATF). The use of any other fluid may cause chattering of the transfer clutch.
2) If the driving mode is changed from 4WD to FWD while making a turn, a light shock may be felt in the vehicle body. This shock is caused by the releasing of the tight corner braking feature, and is a normal phenomenon.
A similar shock may also be felt when changing from 4WD to FWD after a sudden stop.
3) If the pilot lamp remains off even after operating the 4WD selector switch, the 4WD operating electrical circuit may be faulty; the circuit must be checked and repaired.
4) If the front wheels must be engaged with the front end of the vehicle jacked up, or on a roller, be sure to set the 4WD selector switch to the FWD position, or disconnect the transfer solenoid harness connector in the engine compartment.
Remember, if the switch is kept in the 4WD position, the vehicle may be moved as the engine is started.
When disconnecting the harness in the engine compartment, use extreme care not to confuse the connectors.
5) The use of different sized tires will cause a shock when releasing the 4WD mode even when driving straight ahead, or will result in deteriorated fuel consumption. Be sure to use tires of the same size on all of four wheels. The tire inflation pressure must be set to the specifications.
6) When attempting to get out of a immobile state by switchback operation (switchover between "D" and "R"), avoid racing the engine with the lever set in the N position.
7) If the engine or transmission has failed, the vehicle must be towed with the front wheels lifted up. In such an event, the 4WD selector switch must be set in the FWD position.

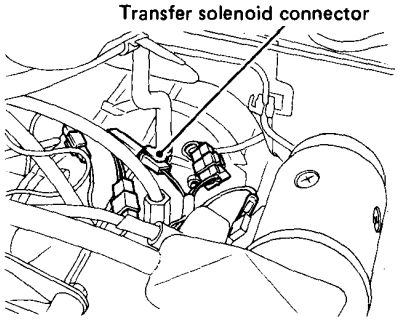

A13-411

Fig. 7-15 Transfer solenoid harness connector

2 LOCK UP TORQUE CONVERTER

1. Construction

An installation drawing in which the centrifugal lock up clutch is built into the torque converter and a view of the shoe section as seen from the front of the engine are shown below.
This lock up clutch transmits torque by the centrifugal force acting on the shoes that slide along the inner circumference of the turbine cover. It has a very simple construction, consisting of five components: shoes and weights with paper facings pasted on their outer surfaces, two leaf springs (main and retractor springs) and pins. Eight shoes are used.

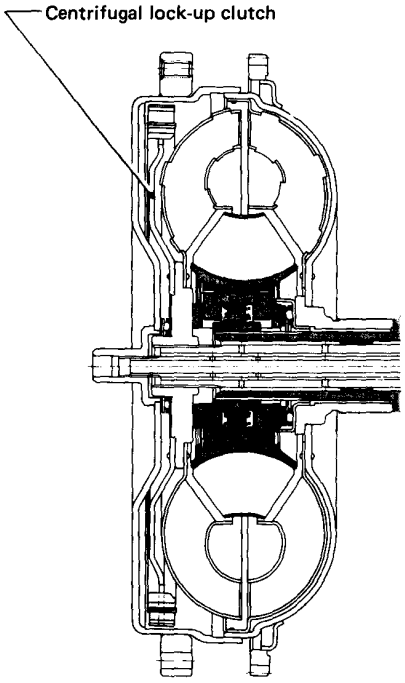

Fig. 7-16

A13-413

Downloaded from www.Manualslib.com manuals search engine

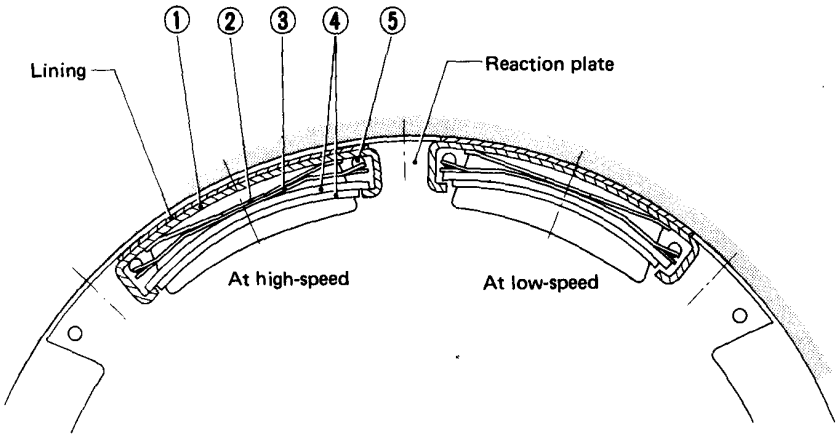

1 Shoe
2 Main spring
3 Retractor spring
4 Weight
5 Pin

Fig. 7-17

A13-414

● Operation of each component

Shoe ... The shoe rotates at the same speed as the torque converter turbine, and slides along the inner circumference of the turbine cover. The shoe sometimes becomes completely engaged with the turbine cover, however, it usually slides in a half-clutch condition. The engine torque is transmitted from the turbine cover through the shoe to the reaction plate and then to the output shaft. Paper is used for the facing.

Weight ... Using the centrifugal force produced by the rotation of the weight, the clutch transmits torque. The weight's primary purpose is to increase the transfer torque capacity in the medium- and low-speed ranges.

Main spring ... The centrifugal force acting on the weight is transmitted to the shoe through the main spring. In the medium- and low-speed ranges, the load of the spring increases in proportion to the centrifugal force of the weight, so that torque capacity also increases. In the medium- and high-speed ranges, however, the spring load becomes constant regardless of the centrifugal force of the weight, functioning as a torque limiter.

Retractor spring ... This spring always functions to pull the shoe inward, which, in the low-speed range where the centrifugal force is small, prevents the shoe from touching the drum.

Pin ... The pin fixes the shoe in place so that it will not come off the reaction plate, and also serves as the weight stopper.

2. Operation

1) First range (low-speed, non-operating range)

Because the return force of the retractor spring is greater than the centrifugal force acting on the shoe and weight, the shoe is drawn inward and kept away from the drum. Thus, torque is not transmitted through the shoe.

As the revolution increases and when the centrifugal force becomes greater than the return force of the spring, the shoe contacts the drum and begins to transfer torque (lower figure).

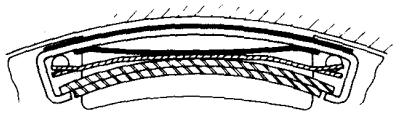

A13-415

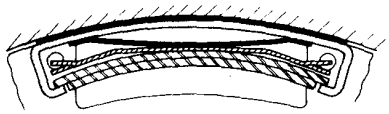

A13-416

Fig. 7-18

2) Second range (medium- and low-speed range, centrifugal clutch range)

The centrifugal force of the weight deflects the main spring, and the weight floats up off the concavity at each end of the shoe (portion Ⓐ in Fig. 7-19).

Although a portion of the weight's centrifugal force is transmitted from the retractor spring to the pin, the greater part of it pushes the shoe through the main spring, working as the power that transmits torque.

On the other hand, the centrifugal force acting on the shoe itself becomes the force that pushes the drum regardless of the movements of the weight. Therefore, the press of the shoe necessary to transmit torque in this range becomes: Shoe's centrifugal force + (Weight's centrifugal force - Retractor spring's return force).

When the speed of rotation goes still higher, the centrifugal force of the weight increases further, and the main spring deflects more, both ends of the weight butt against the pins (through the retractor spring), so that the weight will not move toward the circumference.

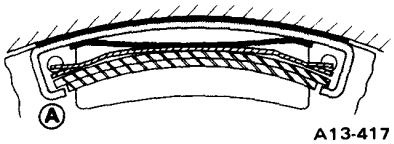

A13-417

Fig. 7-19

3) Third range (medium- and high-speed ranges, torque limiter range)

Because the speed of rotation is high, the weight is stopped, completely pressed against the pins at both ends. The centrifugal force acting on the weight at this time is carried directly from the weight to the pins and then to the reaction plate, and therefore it is not transmitted to the shoe. Accordingly, in this range the transfer torque of the clutch is the frictional force produced by the centrifugal force of

Downloaded from www.Manualslib.com manuals search engine

the shoe. The increasing rate of torque due to an increase in the rotational speed is considerably lower than in the second range; consequently, this is what is called a torque limiter condition.

Further, the centrifugal force of the main spring is balanced and offset by the force with which the spring is pushed, and there is no change in the force pushing the shoe.

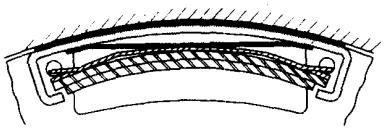

A13-418

Fig. 7-20

4) Fourth range (high-speed range)

The main spring deflects outward due to its own centrifugal force, and separates from the weight. Thus, the upward pressing load with which the weight pushes the spring dies away.

In the third range the centrifugal force of the main spring is offset by the pressing load of the weight. In the fourth range, however, because the centrifugal force of the main spring is carried to the shoe as it is, the transfer torque of the clutch greatly increases as does the torque capacity somewhat increases accordingly.

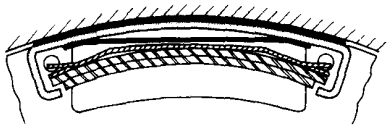

A13-419

Fig. 7-21

Downloaded from www.Manualslib.com manuals search engine

3 OIL PRESSURE CIRCUIT

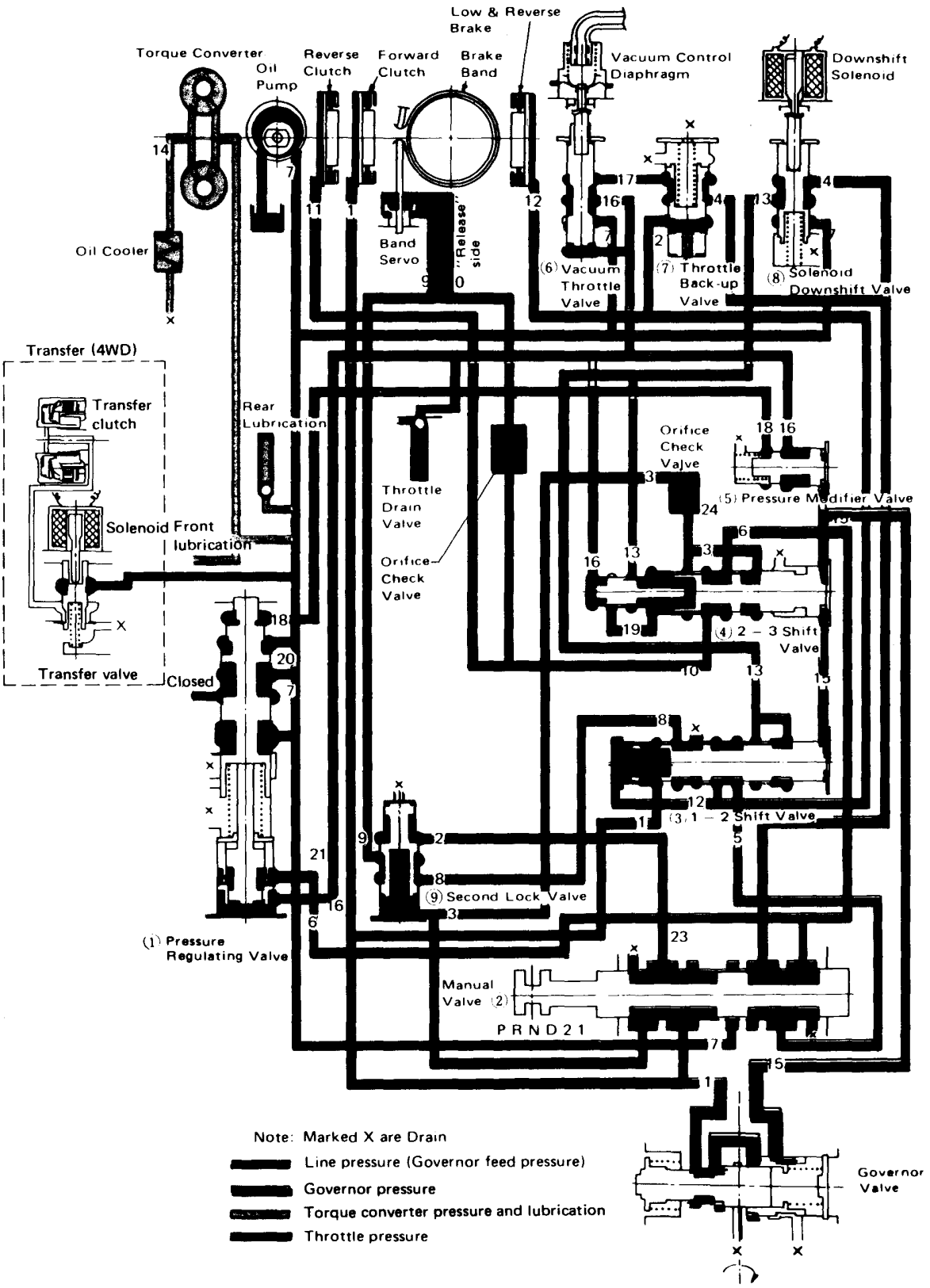

Fig. 7-22

A13-420

Downloaded from www.Manualslib.com manuals search engine

4 FLUID PASSAGES

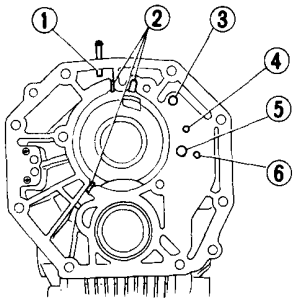

1 Oil seal air breather
2 Oil seal air breather circuit
3 Line pressure (Governor feed pressure)
4 Governor pressure
5 Drain
6 Governor pressure (To test plug)

A13-421

Fig. 7-23 Final reduction case

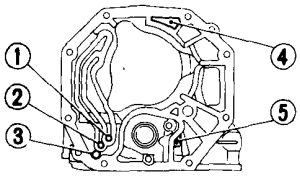

1 Governor pressure
2 Line pressure (Governor feed pressure)
3 Drain
4 To circuit breather
5 To oil seal air breather

A13-422

Fig. 7-24 Transmission case front side

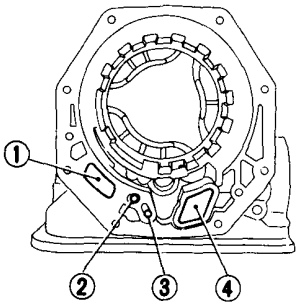

1 Oil pump inlet port
2 Reverse clutch pressure
3 Forward clutch pressure
4 Oil pump outlet port

A13-423

Fig. 7-25 Transmission case rear side

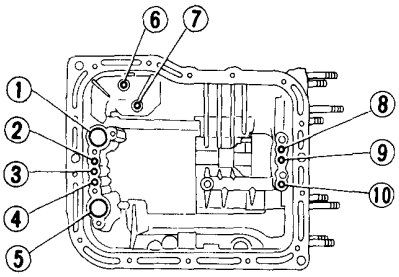

1 Oil pump outlet port
2 Blind hole
3 Forward clutch pressure
4 Reverse clutch pressure
5 Oil pump inlet port
6 Servo connecting pressure
7 Servo release pressure
8 Governor pressure
9 Line pressure (Governor feed pressure)
10 Low & reverse brake pressure

A13-424

Fig. 7-26 Transmission case bottom side

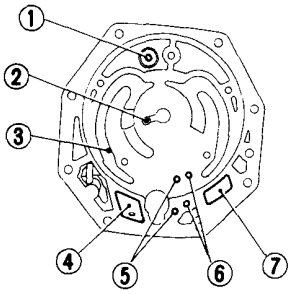

1 Air breather hole
2 To torque converter
3 To transfer clutch
4 Oil pump outlet port
5 Forward clutch pressure
6 Reverse clutch pressure
7 Oil pump inlet port

A13-425

Fig. 7-27 Intermediate case front side

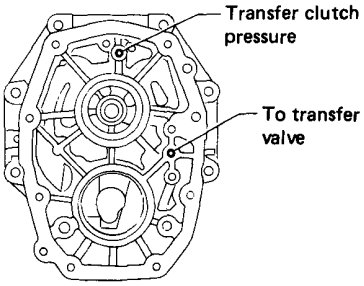

A13-426

Fig. 7-28 Intermediate case rear side

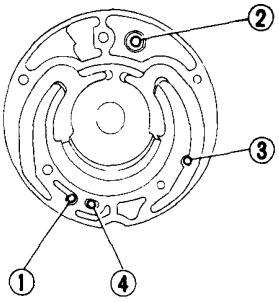

1 Reverse clutch pressure
2 Air breather hole
3 Rear portion lubricating hole
4 Forward clutch pressure

A13-427

Fig. 7-29 Oil pump carrier

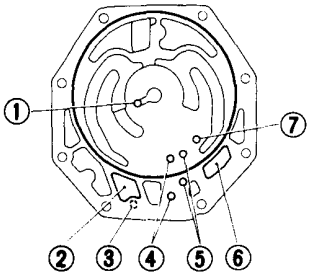

1 To torque converter
2 Oil pump outlet port
3 Line pressure inspection hole
4 Forward clutch pressure
5 Reverse clutch pressure
6 Oil pump inlet port
7 Reverse clutch pressure inspection hole

A13-428

Fig. 7-30 Transmission cover front side

Downloaded from www.Manualslib.com manuals search engine

3. Component Parts

1) Torque Converter & Housing and Gauge & Piping System

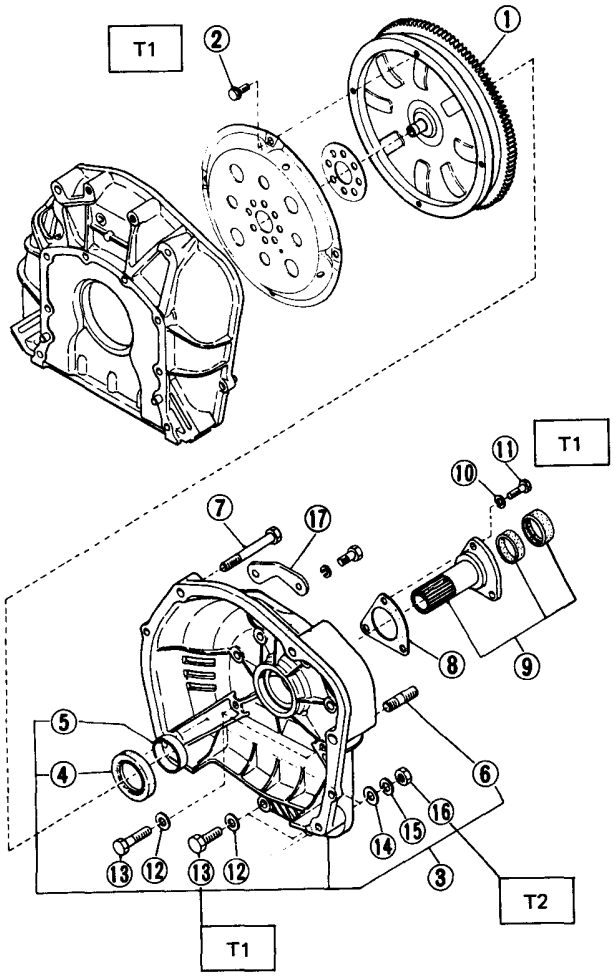

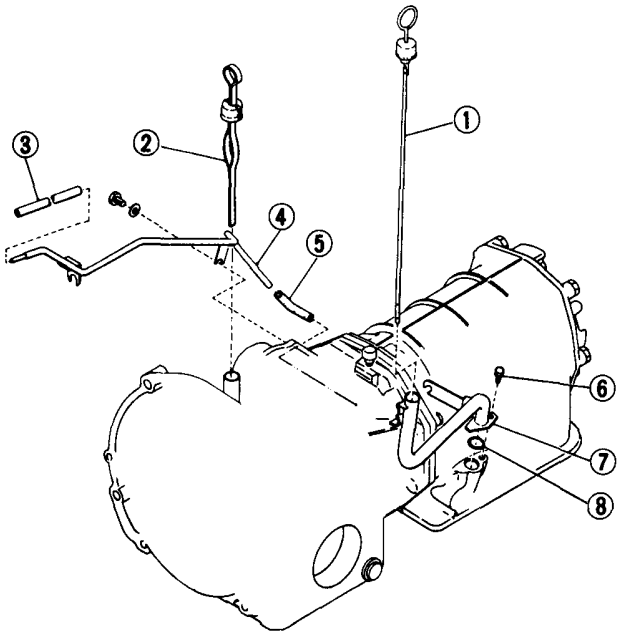

1 ATF oil gauge CP
2 Oil gauge CP
3 Hose
4 Vacuum pipe CP
5 Vacuum hose
6 Bolt & washer ASSY
7 Oil supply pipe CP
8 O-ring

Tightening torque N·m (kg-m, ft-lb)
T1: 23 - 26 (2.3 - 2.7, 17 - 20)
T2: 46 - 54 (4.7 - 5.5, 34 - 40)

1 Torque converter ASSY
2 Bolt
3 Connector housing CP
4 Oil seal (42 x 60 x 9 mm)
5 Bushing
6 Stud
7 Bolt
8 Stator shaft gasket
9 Stator shaft CP
10 Spring washer
11 Bolt
12 Washer
13 Bolt
14 Washer
15 Spring washer
16 Nut
17 Hanger

A13-429

Fig. 7-31

Downloaded from www.Manualslib.com manuals search engine

2) Final Reduction Case and Differential Gear

*Selective parts

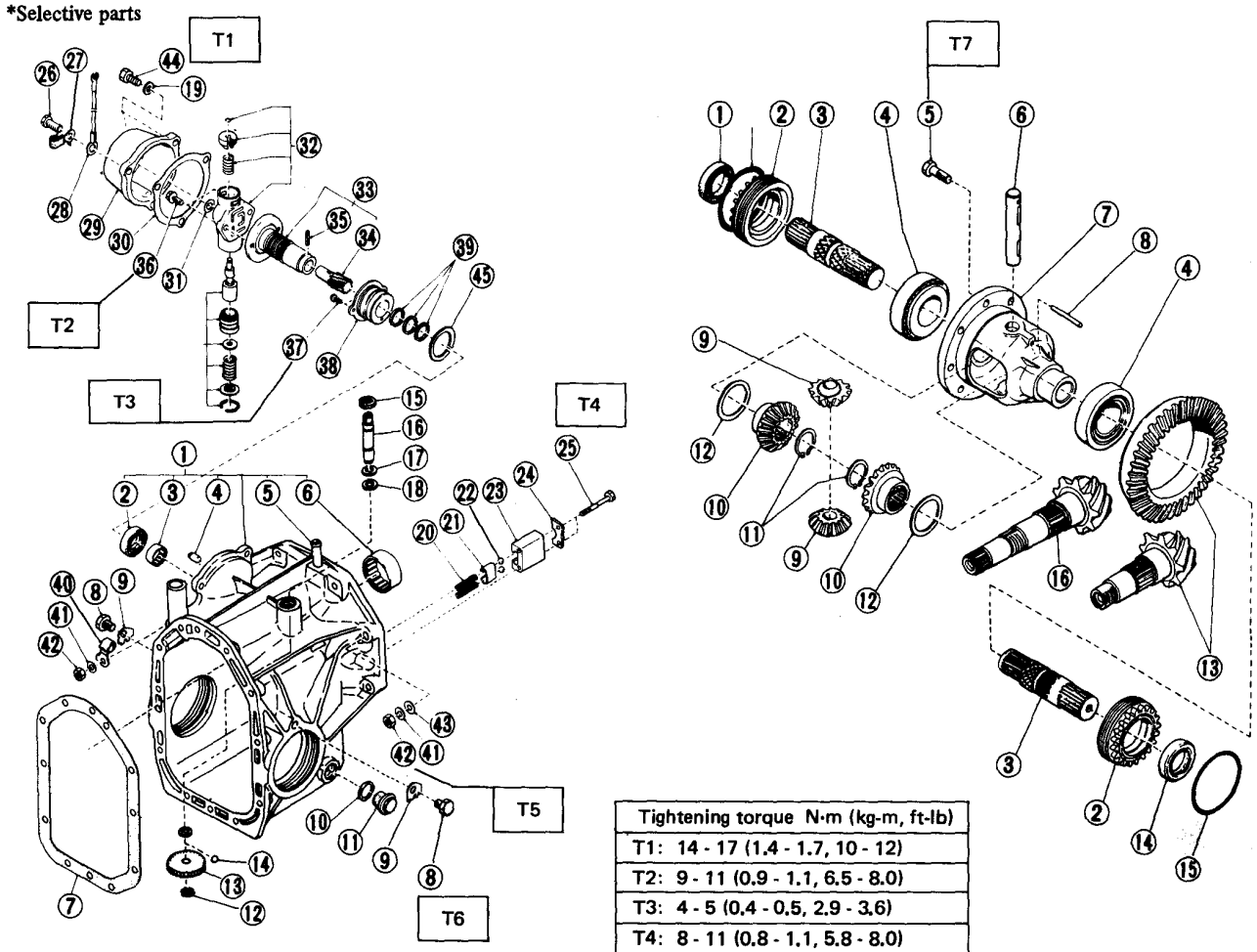

Tightening torque N·m (kg-m, ft-lb)
T1: 14 - 17 (1.4 - 1.7, 10 - 12)
T2: 9 - 11 (0.9 - 1.1, 6.5 - 8.0)
T3: 4 - 5 (0.4 - 0.5, 2.9 - 3.6)
T4: 8 - 11 (0.8 - 1.1, 5.8 - 8.0)
T5: 23 - 26 (2.3 - 2.7, 17 - 20)
T6: 22 - 27 (2.2 - 2.8, 16 - 20)
T7: 57 - 67 (5.8 - 6.8, 42 - 49)

1 Final reduction case
2 Oil seal (22 x 40 x 10 mm)
3 Needle bearing (22 x 28 x 12 mm)
4 Plug
5 Nipple
6 Needle bearing (45 x 55 x 20 mm)
7 Converter housing gasket
8 Bolt
9 Oil seal holder lock plate
10 Oil drain gasket
11 Oil drain plug
12 Snap ring
13 Ball
14 Speedometer driven gear
15 Oil seal (12 x 17.5 x 8 mm)
16 Speedometer shaft
17 Snap ring
18 Washer
19 Washer
20 Parking ball spring
21 Spring retainer
22 Ball
23 Parking actuator support
24 Ball retaining plate
25 Bolt
26 Bolt
27 Oxygen sensor harness clip
28 Earth cord
29 Governor cover
30 Governor cover gasket
31 Washer
32 Governor body
33 Governor shaft
34 Governor driven gear
35 Spring pin
36 Bolt
37 Bolt
38 Governor shaft sleeve
39 Governor seal ring
40 Vacuum hose clamp
41 Spring washer
42 Nut
43 Washer
44 Bolt
45 Seal ring

1 Oil seal (LH)
2 Axle shaft oil seal holder
3 Axle drive shaft
4 Roller bearing
5 Bolt
6 Differential pinion shaft
7 Differential case
8 Straight pin
9 Differential pinion
10 Differential side gear
*11 Snap ring
*12 Washer
13 Pinion & crown gear set (Non-4WD)
14 Oil seal (RH)
15 O-ring
16 Pinion & crown gear set (4WD AT)

Fig. 7-32

A13-430

Downloaded from www.Manualslib.com manuals search engine

3) Transmission Case and Control Valve

*Selective parts

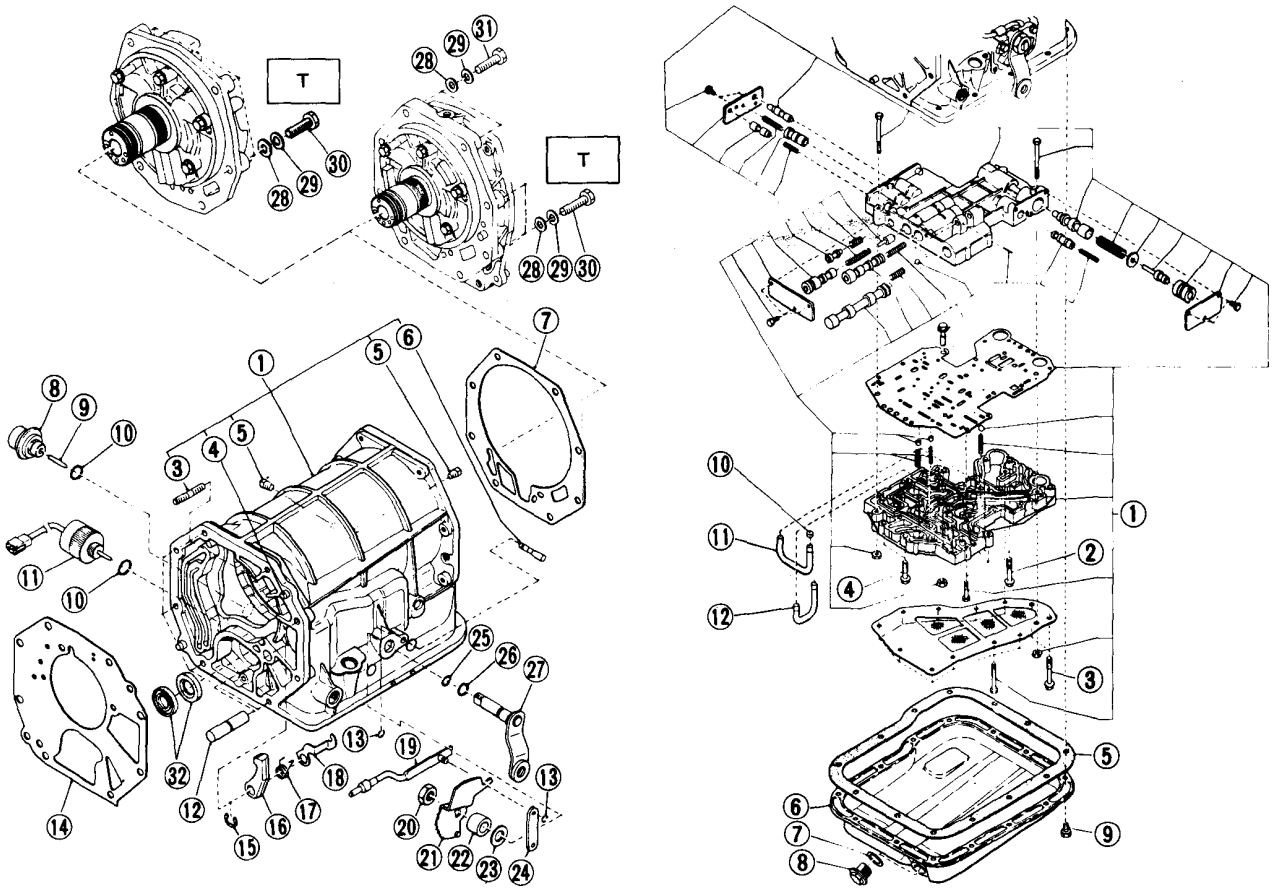

Tightening torque N·m (kg-m, ft-lb)
T: 23 - 26 (2.3 - 2.7, 17 - 20)

1 Transmission case CP

3 Stud bolt (8 x 47 x 12 mm)
4 Straight pin (8 x 18 mm)
5 Plug (1/8 in)
6 Parking lever pin
7 Transmission cover gasket (4WD AT)
8 Vacuum diaphragm ASSY
*9 Diaphragm rod
10 O-ring (22 mm)
11 Downshift solenoid ASSY
12 Parking pawl shaft
13 Clip
14 Transmission case gasket (4WD AT)
15 Clip
16 Parking pawl
17 Parking pawl return spring
18 Parking shaft support plate
19 Parking rod
20 Nut
21 Manual plate
22 Manual shaft spacer
23 Washer (15.2 x 26 x 0.2 mm)
24 Parking lever
25 O-ring (10 mm)
26 Dust seal
27 Selector arm
28 Washer
29 Spring washer
30 Bolt
31 Bolt

1 Control valve ASSY
2 Bolt (6 x 36 x 18 mm)
3 Bolt (6 x 40 x 16 mm)
4 Bolt (6 x 25 x 16 mm)
5 Gasket
6 Oil pan CP
7 Oil drain gasket
8 Oil drain plug
9 Bolt & washer
10 Orifice
11 Servo-apply pipe
12 Servo-release pipe

A13-431

Fig. 7-33

Downloaded from www.Manualslib.com manuals search engine

4) Shaft & Reduction Gear

*Selective parts

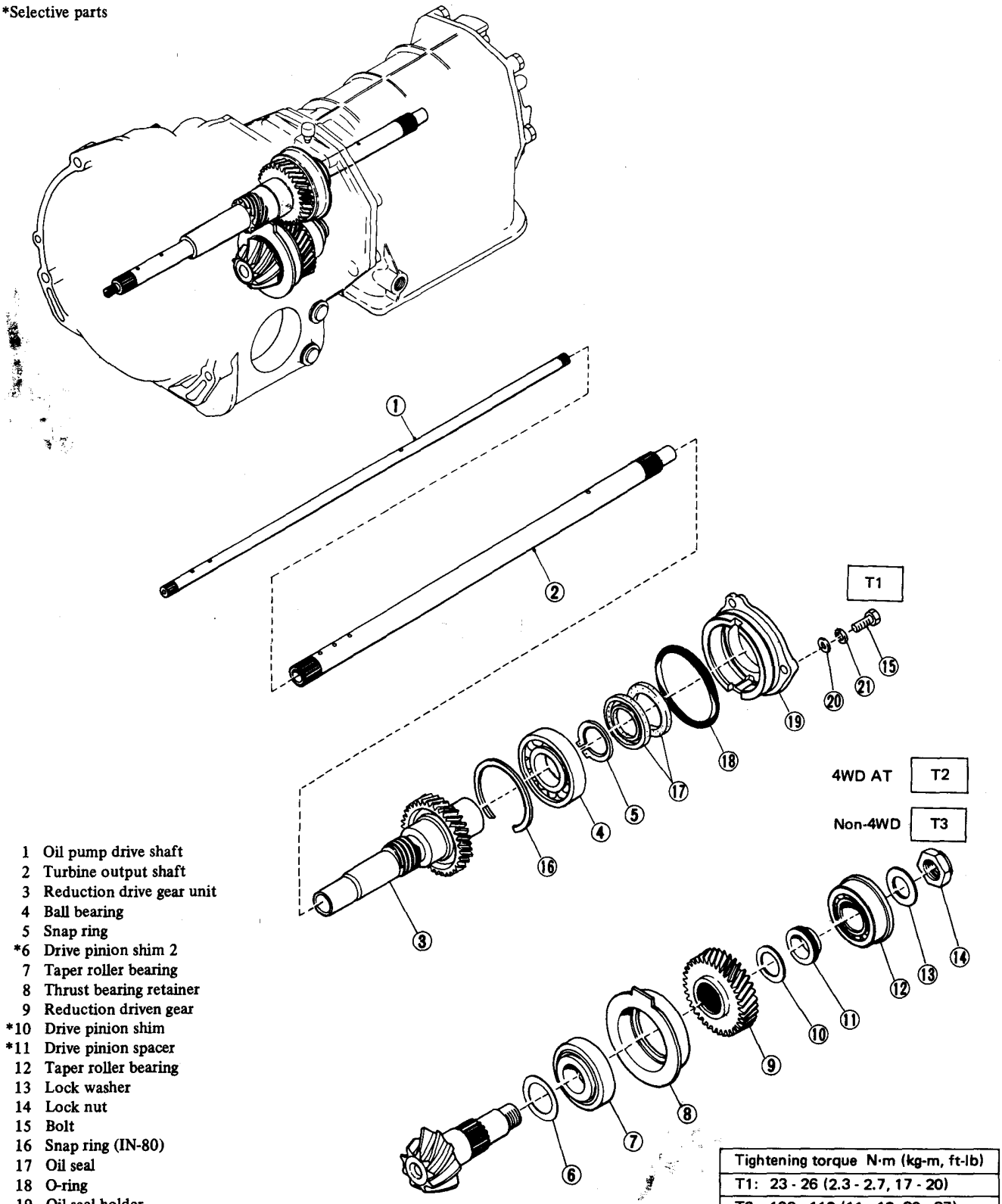

1 Oil pump drive shaft
2 Turbine output shaft
3 Reduction drive gear unit
4 Ball bearing
5 Snap ring
*6 Drive pinion shim 2
7 Taper roller bearing
8 Thrust bearing retainer
9 Reduction driven gear
*10 Drive pinion shim
*11 Drive pinion spacer
12 Taper roller bearing
13 Lock washer
14 Lock nut
15 Bolt
16 Snap ring (IN-80)
17 Oil seal
18 O-ring
19 Oil seal holder
20 Washer
21 Spring washer

Tightening torque N·m (kg-m, ft-lb)
T1: 23 - 26 (2.3 - 2.7, 17 - 20)
T2: 108 - 118 (11 - 12, 80 - 87)
T3: 92 - 104 (9.4 - 10.6, 68 - 77)

A13-432

Fig. 7-34

Downloaded from www.Manualslib.com manuals search engine

5) Planetary Gear and Low & Reverse Brake

*Selective parts

Tightening torque N·m (kg-m, ft-lb)
T: 14 - 16 (1.4 - 1.6, 10 - 12)

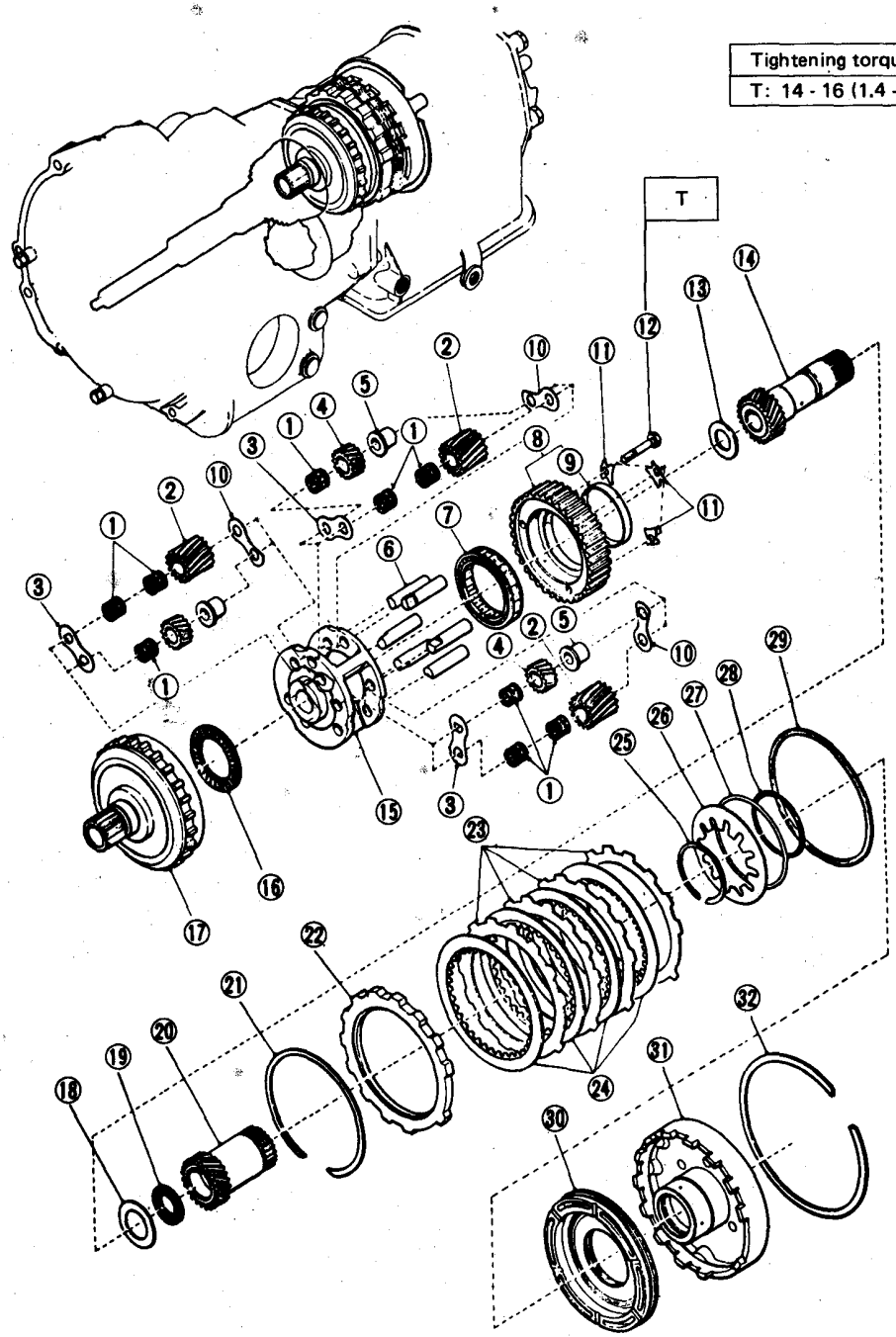

1 Needle bearing
2 Planetary pinion 2
3 Planetary pinion washer
4 Planetary pinion
5 Planetary pinion spacer
6 Planetary pinion pin
7 Low free wheel
8 Free wheel outer race
9 Planetary bushing
10 Planetary pinion washer
11 Free wheel race lock plate
12 Bolt
13 Thrust bearing
14 Planetary input gear
15 Planetary carrier
16 Thrust bearing
17 Planetary output gear
18 Washer
19 Thrust beairing
20 Planetary input gear 2
21 Circlip
*22 Retaining plate 2
23 Clutch driven plate 2
24 Clutch drive plate 2
25 Outer snap ring (55 mm)
26 Low & reverse return spring
27 Thrust spring ring
28 O-ring (56 mm)
29 Lathe cut seal ring (132 mm)
30 Clutch piston 2
31 Center support
32 Inner snap ring (144 mm)

Fig. 7-35

A13-375

Downloaded from www.Manualslib.com manuals search engine

6) Forward Clutch & Reverse Clutch

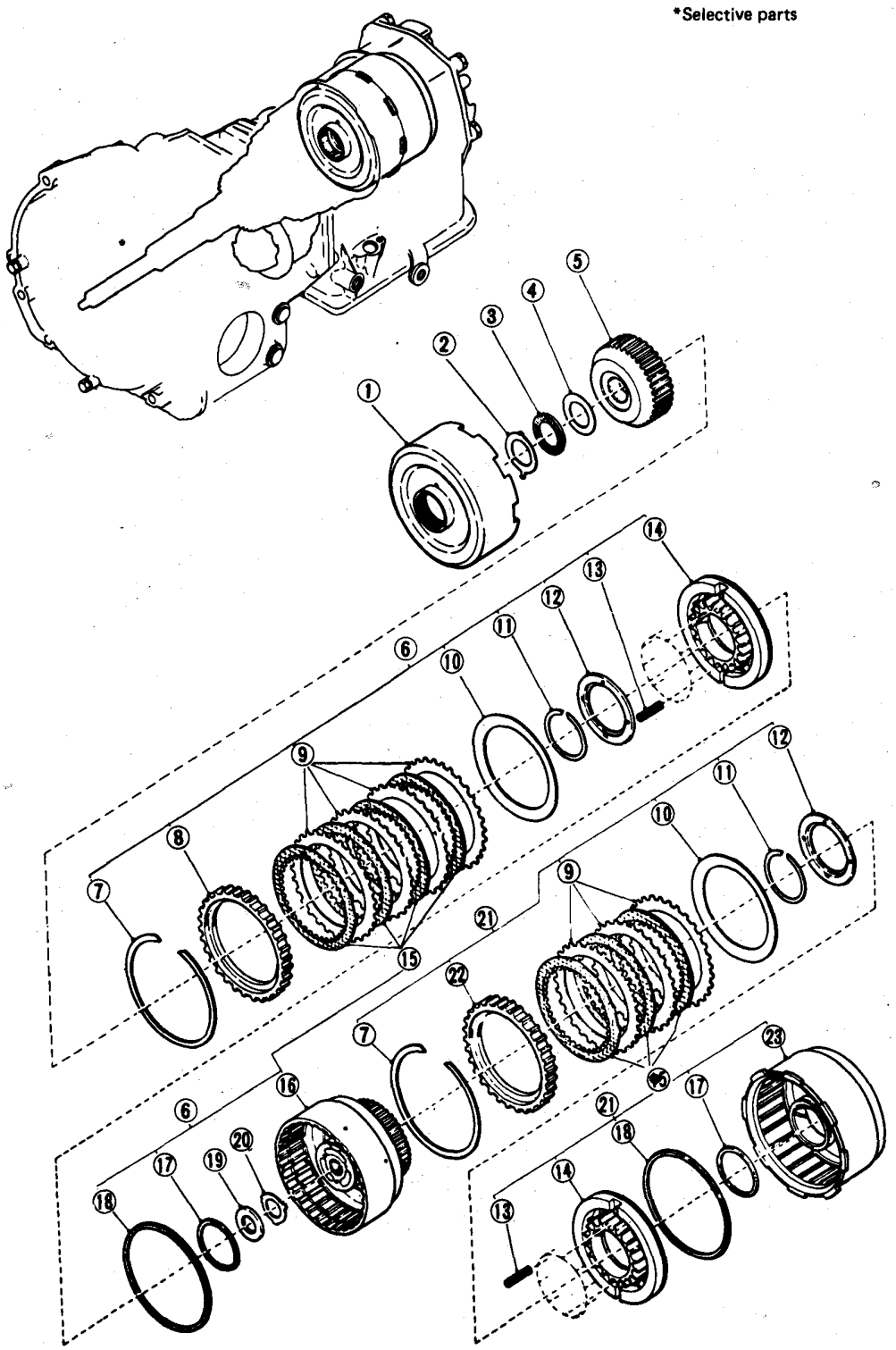

1 Connecting shell
2 Lock washer
3 Thrust bearing
4 Washer
5 Clutch hub
6 Forward clutch assembly
7 Snap ring
8 Retainer plate
9 Driven plate 115
10 Dished plate
11 Snap ring
12 Spring retainer
13 Spring
14 Clutch piston assembly
15 Drive plate 115
16 Forward clutch drum
17 Seal ring
18 Lathe cut seal ring
19 Thrust bearing
20 Washer
21 Reverse clutch assembly
*22 Retainer plate
23 Reverse clutch drum

Fig. 7-36

Downloaded from www.Manualslib.com manuals search engine

7) Band Servo & Oil Pump

*Selective parts

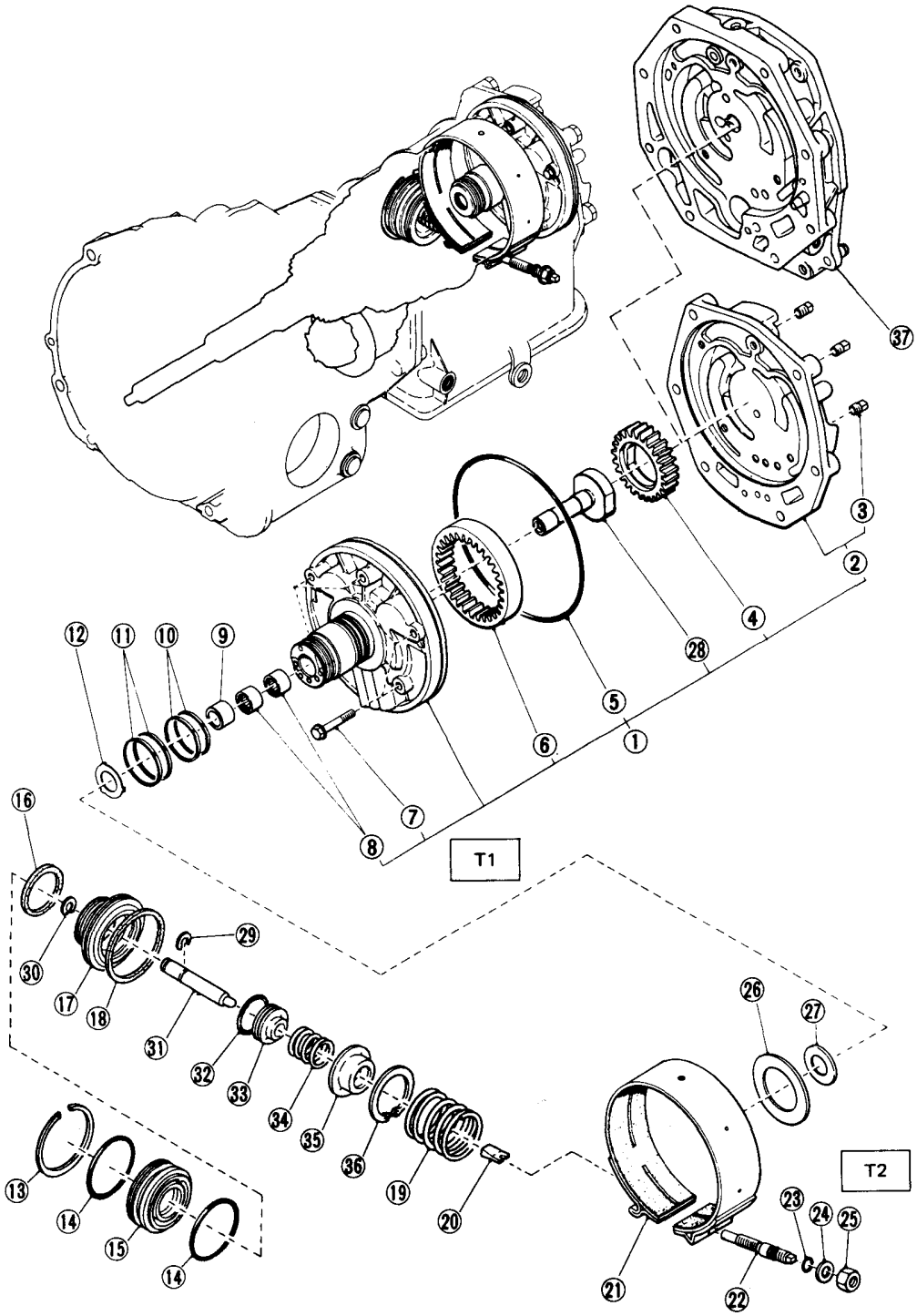

1 Oil pump ASSY
2 Transmission cover CP
3 Plug
*4 Oil pump inner gear
5 O-ring
*6 Oil pump outer gear
7 Bolt
8 Needle bearing
9 Oil pump carrier bushing
10 Seal ring
11 Seal ring
*12 Washer
13 Snap ring
14 O-ring
15 Servo-piston cover
16 Seal ring
17 Servo-piston CP
18 Seal ring
19 Servo return spring
20 Brake band strut
21 Brake band ASSY
22 Brake band adjust screw
23 O-ring
24 Washer
25 Nut
*26 Thrust washer
27 Thrust bearing
28 Oil pump drive shaft 2
29 Snap ring (Inner)
30 Snap ring (Outer)
31 Servo piston rod
32 O-ring
33 Accumulator piston
34 Accumulator spring
35 Accumulator supporter
36 Band servo clip
37 Intermediate case

Tightening torque N·m (kg-m, ft-lb)
T1: 6 - 8 (0.6 - 0.8, 4.3 - 5.8)
T2: 25 - 28 (2.5 - 2.9, 18 - 21)

- Adjusting brake band
  Tighten adjusting screw to a torque of 9 N·m (0.9 kg-m, 6.5 ft-lb), then turn it back two turns.
  Tighten lock nut to secure the adjustment.

Fig. 7-37

A13-433

Downloaded from www.Manualslib.com manuals search engine

8) Extension Case

*Selective parts

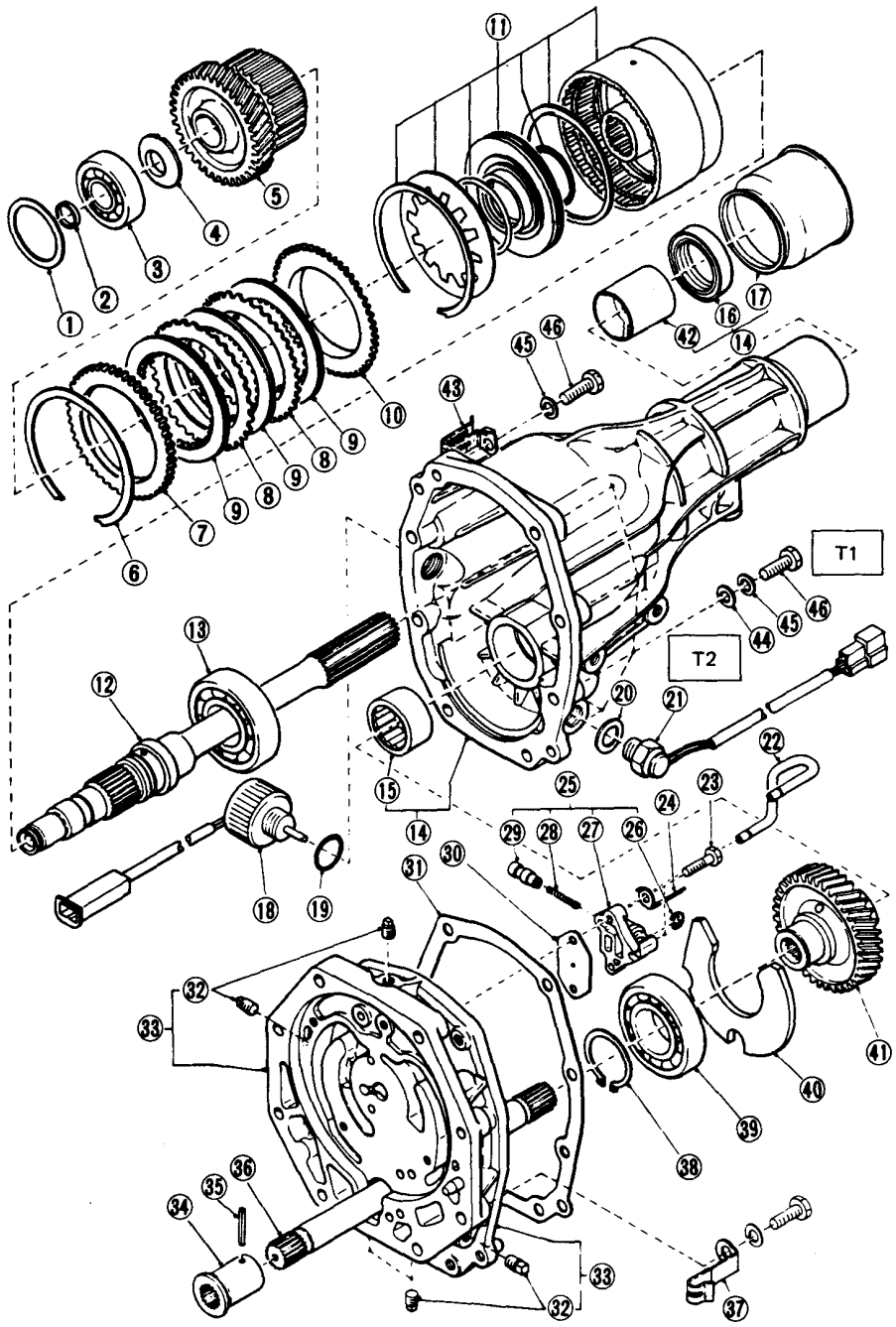

*1 Washer
2 Seal ring
3 Ball bearing
4 Washer
5 Transfer driven gear UN
6 Snap ring (IN 98.5)
*7 Pressure plate (F)
8 Driven plate 3
9 Drive plate 3
10 Pressure plate (R)
11 Transfer clutch drum
12 Rear drive shaft
13 Ball bearing
14 Externsion case CP
15 Needle bearing
16 Oil seal
17 Dust cover
18 Transfer clutch solenoid
19 O-ring
20 Gasket
21 Temperature switch ASSY
22 Pipe
23 Bolt
24 Clip
25 Transfer clutch valve ASSY
26 Clip
27 Transfer valve body
28 Transfer valve spring
29 Transfer clutch valve
30 Plate
31 Extension gasket
32 Plug
33 Intermediate case CP
34 Coupling
35 Straight pin
36 Transfer drive shaft
37 Clamp
38 Snap ring (OUT 30)
39 Ball bearing
40 Thrust plate
41 Transfer drive gear
42 Bushing
43 Clip
44 Washer
45 Spring washer
46 Bolt

Tightening torque N·m (kg-m, ft-lb)
T1: 23 - 26 (2.3 - 2.7, 17 - 20)
T2: 16 - 20 (1.6 - 2.0, 12 - 14)

A13-434

Fig. 7-38

Downloaded from www.Manualslib.com manuals search engine

4. Troubleshooting and On-car Service

1 TROUBLESHOOTING

Many troubles of the automatic transmission may be corrected by performing the basic inspection and adjustment procedures. Before starting the regular troubleshooting operation, carry out the following preliminary inspection.

1. Necessary Test Gauges

1) Tachometer (It is desirable to be able to read to 50 rpm.)
2) Vacuum gauge (It is used for measuring intake manifold vacuum.)
3) Oil pressure gauge [0 to 2,452 kPa (0 to 25 kg/cm^2, 0 to 356 psi) range].
Set above gauges so that the driver can see them.

2. Preliminary Inspection

1) Confirm that the engine tune-up has been completed. Check the idling speed and idling boost.
If engine is out of adjustment, check also the stall speed.
2) Check that the linkage between the accelerator pedal and the carburetor is functioning properly. (Check the full-opened and fully closed positions.)
3) Ensure that the vacuum pipe is not disconnected.
4) See that no fluid is leaking from the ATF cooler circulation pipe.
5) Check that the kickdown switch functions at the normal pedal position.
6) Check that the electrical circuits of the kickdown solenoid, transfer solenoid and inhibitor switch are functioning properly.
7) Confirm that the manual linkage adjustment has been completed.
8) See that no fluid is leaking out of the transmission.
9) See that the ATF level and differential oil level are normal.
After completing the above listed operations, perform checks on the items listed in 4. according to the Troubleshooting chart.

NOTE:
Chattering of transfer clutch
- **If considerable chattering is felt in the transfer clutch when making a turn in 4WD mode, replace two to three liters of transmission oil with the recommended ATF.**

Downloaded from www.Manualslib.com manuals search engine

3. Troubleshooting

Trouble	On the car check item	Off the car check item
Large shock when shifting "N" → "D"	G, J	j
Car will not run, slip, or acceleration is very poor in "D", "2", or "1". (Car runs in "R".)	G, J	j, r
Car will not run, slip, or acceleration is very poor in "R". (Car runs in "D", "2", and "1".)	G, J	n, k, r
Car will not run in any range.	G, J	q, r, v
Slip is felt when starting in FWD D range. (Car runs in "1" range.)	G, J	r, t
Slip is felt when starting in 4WD mode. (Car runs in FWD mode.)		e
Car runs even in "N".	J	j, k
Low maximum speed, or poor acceleration.	H, L, G	m, n, h
Car is braked if lever is set in "R".	L	j, m, v
No shift from 1st to 2nd.	K, M, J, X	m, r
No shift from 2nd to 3rd.	K, L, M, J	k, r
Shift points too high from 1-2 and 2-3.	G, J	r
Shift occurs from 1 to 3.	L, K, G, M, J	m, r
Large shock when shifting 1-2.	L, G, J	m
Large shock when shifting 2-3.	L, G, M, J	k, m
No shock when shifting 1-2, or slip occurs.	L, G, M, J	m, r
No shock when shifting 2-3, or slip occurs. Engine races.	L, G, M, J	k, r
Car is braked when shifting 1-2.	J	n, k, t
Car is braked when shifting 2-3.	L, J	m
No shift from 3rd to 2nd.	K, G, M, J	k, m, r
No shift from 2nd to 1st, or from 3rd to 1st.	K, L, J	m, t
Large shock is felt when car speed decreases when accelerator pedal released.	K, G, J	r
3-2 shift point or 2-1 shift point is too high.	K, G, J	r
No kickdown occurs when accelerator pedal is depressed from 3rd. (Within kickdown limit speed.)	K, M, J	m, r
Kick down occurs or engine overruns when accelerator pedal is depressed from 3rd. (Above kickdown limit.)	G, K, J	k, r
Engine races when gear is changed from 3rd to 2nd and accelerator pedal is depressed.	L, G, M, J	k, m, r
Gear remains in 3rd and is not changed to 2nd even when lever is set to "2".	L, G, M, J	m, r
No shock is felt, or engine races when shifted from "1" to "2".	L, N, M, J	m

Downloaded from www.Manualslib.com manuals search engine

Trouble	On the car check item	Off the car check item
Gear remains in 3rd and is not changed to 2nd even when lever is set to "1".	L, K, G, J	k, m, r
No engine brake is applied in 1st gear.	G, J	n, r
Gear shift 1-2 or 2-3 occurs in "1".	J	r
Gear shift 2-1 does not occur in "1".	K, L, J	n, r
Car begins to move even when lever is set to "P", or parking gear remains engaged even when lever is moved from "P".		v
Transmission overheats.	G, H, L	k, m, n, h, j
Fluid spouts out while running. Car exhaust emits white smoke while running.	H, G, W	k, m, n, h, j
Unusual smell from oil supply pipe.	N	j, k, m, n
Large noise in "P" or "N".		q
Large noise in "2", "1", or "R".		q, t, l
Differential gear oil is contaminated with automatic transmission fluid.		z, r, g
Automatic transmission fluid is contaminated with differential gear oil.		z, g
Large noise when running in FWD 3rd gear.		w, x
Large noise when running in 4WD 3rd gear.		l'

4. Inspection Items

1) Inspection Items with Automatic Transmission Mounted on Vehicle

G Oil pressure check
H Stall speed
J Control valve
K Governor valve
L Brake band adjustment
M Servo pipe
N Inspection of fluid by draining
W Vacuum diaphragm
X Nylon gear

2) Inspection Item with Automatic Transmission Detached from Vehicle

e Transfer valve, transfer pipe, rear drive shaft seal ring
f Transfer clutch
g Drive pinion rear oil seal
h Torque converter one-way clutch
j Forward clutch
k Reverse clutch
l Planetary gear
l' Transfer gear
m Brake band and band support
n Low & reverse brake
q Oil pump
r Leak from hydraulic circuit
t Power train one-way clutch
v Parking linkage
w Hypoid gear
x Reduction gear
z Stator shaft and reduction drive gear oil seals and O-rings, and governor shaft oil seal

2 ON-CAR SERVICE

1. Method of Inspection and Adjustment

1) Fluid Level Check and Fluid Replacement

1) Automatic transmission fluid (ATF)

1) Checking fluid level

a. Raise the ATF temperature to 60 to 80°C (140 to 176°F). [This temperature may be attained by running a distance of 5 to 10 km (3 to 6 miles)].

NOTE:
The level of ATF varies with fluid temperature. Pay attention to the fluid temperature when checking oil level. A change in the ATF level by oil temperature is shown in the following figure.

b. Ensure the vehicle is level and set the selector lever in "P" range. Measure fluid level with the engine idling.

NOTE:
After running, idle the engine for one or two minutes before measurement.

c. If the fluid level is below the lower limit mark, add the recommended ATF until the fluid level is found within the specified range (within upper and lower limit marks). When the transmission is hot, the level should be above the center of upper and lower marks, and when it is

Downloaded from www.Manualslib.com manuals search engine

cold, the level should be found below the center of these two marks.

NOTE:

a. Use care not to exceed the upper limit level shown in item 2) below.

b. Check the ATF level when delivering a car to a customer.

2) ATF level

a. ATF level varies with temperature as shown in figure. Remember that the addition of fluid to the upper limit mark when the transmission is cold will result in the overfilling of fluid.

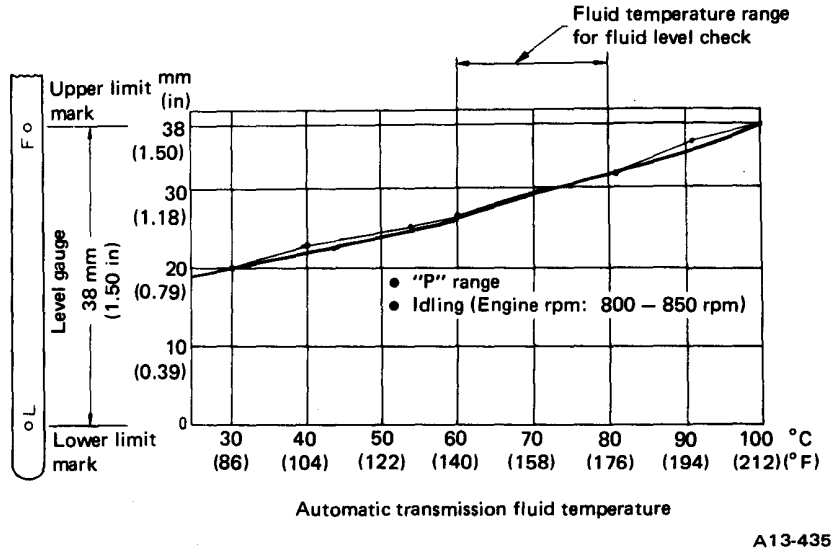

Fig. 7-39 Automatic transmission fluid level (4WD AT)

b. Fluid temperature rising speed

- By idling the engine
  Time for rising temperature to 60°C (140°F) with atmospheric temperature of 0°C (32°F): More than 25 minutes

(Reference)

Time for temperature rise to 30°C (86°F) with atmospheric temperature of 0°C (32°F): Approx. 8 minutes

- By running the vehicle
  Time for temperature rise to 60°C (140°F) with atmospheric temperature of 0°C (32°F): More than 10 minutes

c. Method for checking fluid level upon delivery or at periodic inspection.
Check fluid level after a warm-up run of approx. 10 minutes. During this warm-up period, the automatic transmission functions can also be checked.

3) Inspection and replacement intervals

Inspection	At delivery, after initial 1,600 km (1,000 miles) and every 24,000 km (15,000 miles) or 15 months
Replacement	Every 48,000 km (30,000 miles) or 30 months

4) Replacement of ATF

a. After allowing the engine to cool for 3 to 4 hours, remove the fluid pan drain plug, and drain oil thoroughly.

NOTE:

a. The fluid will be discharged to the front as the drain plug is removed. To avoid the stream of fluid, the worker should stand under the oil pan toward the front of the car performing this procedure.

b. The amount of fluid that can be drained is approx. 4ℓ (4.2 US qt, 3.5 Imp qt) of the total capacity of 6.0 to 6.4ℓ (6.3 to 6.8 US qt, 5.3 to 5.6 Imp qt) for 4WD and 5.6 to 6.0ℓ (5.9 to 6.3 US qt, 4.9 to 5.3 Imp qt) for non-4WD. Some fluid will remain in the torque converter, oil passage, or in the valve body.

b. Tighten the drain plug. [Tightening torque: 25 N·m (2.5 kg-m, 18 ft-lb)].

NOTE:

Be sure to replace the gasket with a new one.

c. Pour 4ℓ (4.2 US qt, 3.5 Imp qt) of recommended ATF into the case through the oil supply pipe.

d. Run the vehicle until the fluid temperature rises to 60 to 80°C (140 to 176°F), and then add fluid until the oil level can be found within the specified range.

NOTE:

a. If the drained fluid is black or thick, it indicates that some components in the transmission are faulty. Disassemble and check the transmission.

b. Be sure to use recommended ATF when changing the transmission fluid.

2) **Differential gear oil**

- Checking oil level

1) Ensure the vehicle is level.

NOTE:

Do not check the oil level nor add oil to the case with the front end of the vehicle jacked up; this will result in an incorrect reading of the oil level.

2) Check whether the oil level is between the upper and lower marks. If it is below the lower limit mark, add oil until the level reaches the upper mark. The difference in level between upper and lower marks corresponds to 0.4ℓ (0.8 US pt, 0.7 Imp pt).

- Oil to be used
  Recommended gear oil

API classification	GL-5
SAE viscosity No.	75W-80

Downloaded from www.Manualslib.com manuals search engine

- Inspection and replacement interval

Inspection	Every 12,000 km (7,500 miles) or 7.5 months
Replacement	Every 48,000 km (30,000 miles) or 30 months

- Replacement of oil
  Remove the drain plug located on the left side of the final reduction case, and drain the oil completely. Tighten the plug to a torque of 25 N·m (2.5 kg-m, 18 ft-lb), and remove the oil gauge, and pour new oil into the case through the opening until the oil level reaches the upper level mark [total quantity of oil: 1.2ℓ (1.3 US qt, 1.1 Imp qt)].

2) Oil Leakage Check Points

It is difficult to accurately determine the precise position of a oil leak, since the surrounding area also becomes wet with oil. The places where oil seals and gaskets are used are as follows:

1) Jointing portion of the case

- Transmission case and final reduction case jointing portion
- Final reduction case and converter housing jointing portion
- Transmission case and transmission cover (or intermediate case) jointing portion
- Intermediate case and extension case jointing portion

2) Converter housing

- Engine crankshaft oil seal
- Torque converter impeller sleeve oil seal
- ATF pipe connector

3) Final reduction case

- Final reduction case and governor cover
- Axle shaft oil seal
- O-ring on the outside diameter of axle shaft oil seal holder
- Differential oil filler port
- Differential oil drain plug
- Speedometer cable mounting portion
- Governor test plug
- Air breather

4) Automatic transmission case

- Mating surface of oil pan and transmission case
- O-ring on the outer diameter of servo piston cover
- Test plug (Servo connecting side and servo release side)
- Oil supply pipe connections
- ATF pipe connector
- Vacuum diaphragm location
- Downshift solenoid location
- O-ring on the outer diameter of servo adjusting screw
- Oil pan drain plug
- Governor pressure and line pressure checking blind plugs (steel ball)

5) Intermediate case

- Test plugs (two plugs for line pressure, and plugs on forward clutch, reverse clutch, and transfer clutch)
- Blind plug (steel ball)

6) Extension

- Rear drive shaft oil seal
- Transfer solenoid location
- Thermoswitch location

The points listed above should be checked for fluid leak. Checking method is as follows:

- Place the vehicle in the pit, and check whether the leaking oil is ATF or not. The ATF is wine red in color, and can be discriminated easily from engine oil and gear oil.
- Wipe clean the leaking oil and dust from a suspectable area, using a noninflammable organic solvent such as carbon tetrachloride.
- Run the engine to raise the fluid temperature, and set the selector lever to "D" in order to increase the fluid pressure and quickly detect a leaking point.

3) Checking the Engine Idling rpm

Excessively low engine idling rpm will lead to rough engine operation and excessively high idling rpm will lead to a sudden shift shock or creeping when shifting from N to D or R.

Idling rpm for automatic transmission cars (N or P range)	800 ± 100 rpm

4) Checking and Adjusting the Kickdown Switch and Downshift Solenoid

Set the ignition switch to ON, and fully depress the accelerator pedal to see whether the solenoid functions or not. If no kickdown occurs, or if the shift point occurs with the throttle half open, check the kickdown switch, downshift solenoid and associated wires. If kickdown failure occurs infrequently, it may be due to malfunction of the solenoid contaminated with dirt. Wash the inside of solenoid while moving the push rod. After washing, carefully check the operation of the solenoid.

NOTE:
Before removing or installing the solenoid, drain approx. 2ℓ (2.1 US qt, 1.8 Imp qt) of ATF.

5) Checking Negative Intake Pressure

Check whether pressure is over -60.0 kPa (-450 mmHg, -17.72 inHg) at idling speed of engine, and whether pressure decreases in proportion to increase of engine speed when accelerator pedal is depressed.

6) Checking Creeping

Check whether car exhibits a certain amount of creeping when it is brought to a temporary stop with selector lever in "D", "2", "1" or "R" position.

7) Checking and Adjusting the Manual Linkage

Adjustment of the manual linkage, like the inspection of fluid level, is an important operation in the automatic transmission service. Remember that improper adjustment may lead to a damaged transmission.

Downloaded from www.Manualslib.com manuals search engine

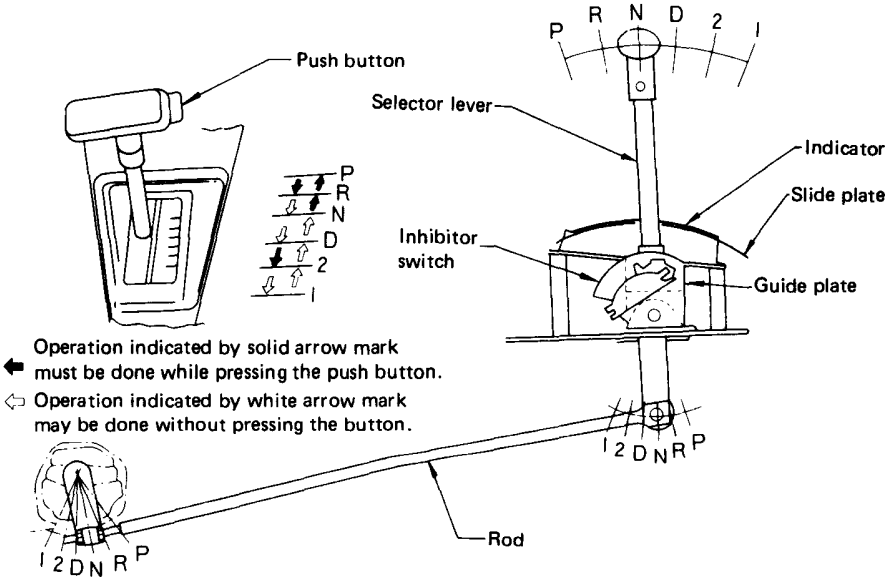

A13-436

Fig. 7-40 Selector system

1) Inspection

1) While pressing the release button, move the selector lever from the "P" to "1" range; a click will be heard in each position. This clicking sound is caused by a detent of the manual valve in the transmission, and it indicates the correct selector lever position. Check to see that the indicator needle is aligned to this position, and also see that it is aligned with the groove of the guide plate when the release button and selector lever are released.
2) Confirm that the selector lever cannot be moved into "R" from "N" when pushed lightly, without first pressing the release button.
3) Confirm that the engine can only be started in "P" and "N" ranges.
4) Confirm that the backup lamp will light only when the selector lever is moved to the "R" range.
5) Place the vehicle on a slope, and set the selector lever to "P" and check whether the vehicle is locked properly.

2) Adjustment

If the manual valve detent position is not aligned with the guide plate groove position, perform the adjustment as follows.
1) Set the selector lever to "N".
2) Loosen the adjusting nut of the linkage rod.
3) Set the detent position so the selector arm is aligned with the "N" locating mark of the transmission case [within the range of a 6 mm (0.24 in) dia. boss].

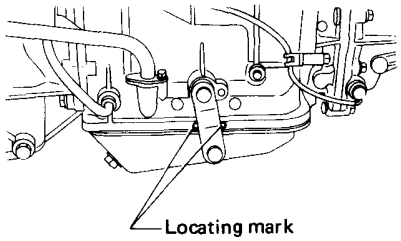

A13-437

Fig. 7-41 Adjusting rod

4) Adjust the rod so that the "N" mark of the guide plate is aligned correctly with this detent position.
5) If the indicator needle is not aligned with the guide plate marking, remove the console box, loosen the four indicator mounting screws and adjust the position of the indicator ASSY.

8) Checking the Vacuum Diaphragm and Vacuum Hose

A loose or disconnected vacuum hose will result in rough engine idling and an abrupt shifting shock even with light acceleration. In such a case, check the vacuum hose for cracks or check the vacuum hose joint. Excessively large shift shocks and the emission of white exhaust smoke while running may indicate a broken vacuum diaphragm. If such symptoms occur, loosen the two bolts securing the vacuum pipe (at governor cover and at the engine and transmission jointing), and turn the vacuum pipe upward around the bracket of the diaphragm joint until the bracket comes free from the bolts.
Pull the vacuum hose and vacuum pipe out toward you and drain approx. 2ℓ (2.1 US qt, 1.8 Imp qt) of ATF. Remove the vacuum diaphragm by rotating by hand.

NOTE:
a. Be sure to remove the vacuum diaphragm when the transmission is cold. (To avoid a burn.)
b. Also take out the diaphragm rod.

9) Checking, Correcting, Disassembling, and Reassembling the Governor Valve

If automatic shifting is not performed normally while running in the D range, or if acceleration is possible only up to 50 to 60 km/h (31 to 37 MPH) in the D range, it is often attributable to malfunctioning of the governor valve.
Such malfunctioning may be caused by sticking of the valve due to clogged dirt, burrs or nicks on the valve body, etc.

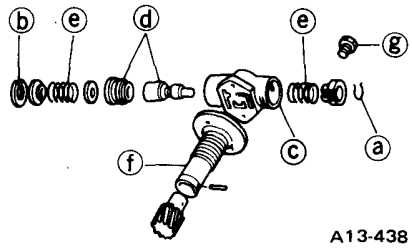

A13-438

Fig. 7-42 Component of governor valve

1) Disassembly

1) Remove the three governor cover mounting bolts from the right side of the final reduction case, and remove the governor cover by turning it slightly in order to avoid interference from the vacuum pipe bracket.

Downloaded from www.Manualslib.com manuals search engine

2) Pull the governor valve out while carefully turning clockwise.
3) Remove the E-clip ⓐ snap ring ⓑ then remove the valve ⓓ, spring ⓔ and other parts from the body ⓒ.
4) Remove two bolts ⓖ securing the shaft ⓕ and body ⓒ and disassemble them.

NOTE:
Be sure to perform the steps 3) and 4) after pulling the governor valve out from the final reduction case.

2) Checking

Check the governor valve and body visually and by feeling with a finger for burrs and dents, and repair as necessary. If the sliding surface of the body or valve is defective, replace the governor body ASSY with a new one.

3) Correcting

1) To correct the governor valve and governor valve 2, lightly apply a fine grained oil stone to the burred edge as shown in the figure, and rotate the valve one or two turns. Check whether or not the burrs have been removed by feeling with a finger.
Repeat this operation until the burrs are no longer felt.

NOTE:
a. Note that the finishing of the end face is not chamferring, but it is light deburring. A sharp edge having no burrs is desirable.
b. Replace the valve ASSY if flaws and dents are noted on the sliding surface.

2) Burrs and nicks at the edge of the valve body groove should be removed by using a small standard screwdriver.
3) Clean the repaired parts in clean lamp oil or white gasoline. Fit the governor valve and governor valve 2 into the valve body, and check for smooth sliding of these parts by lightly pressing them to the inside of the valve body while rotating.

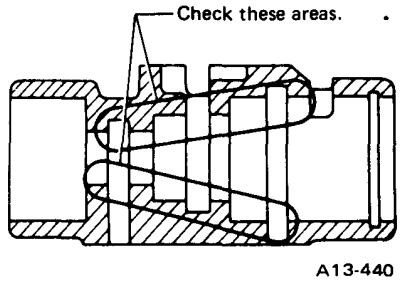

Fig. 7-44 Checking the edge of the governor body groove

NOTE:
If the governor valve checks out to operate normally, the seal ring of governor sleeve must be checked.

4) Reassembling

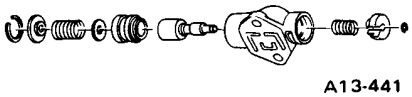

Fig. 7-45 Reassembling the governor valve

1) Reassemble the governor valve components by referring to the figure shown above.
Pay attention to the orientation of the weight.

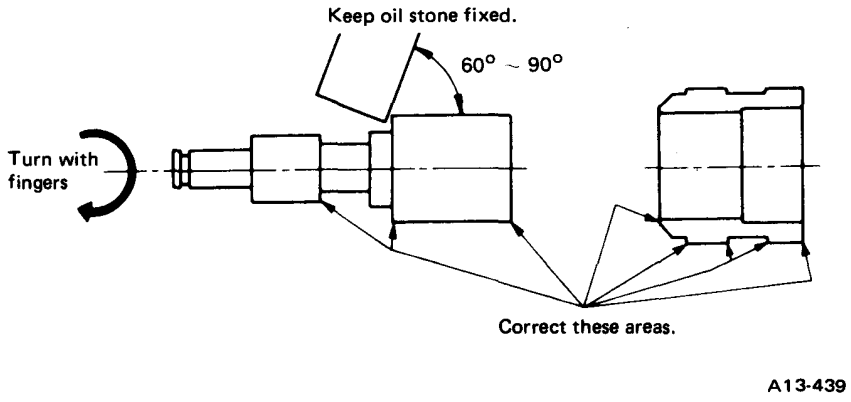

Fig. 7-43 Correcting valve

2) Confirm that there is no foreign matter in the oil passage of the governor shaft, and tighten the shaft to the governor body after washing.

Tightening torque	9 – 11 N·m (0.9 – 1.1 kg-m, 6.5 – 8.0 ft-lb)

NOTE:
When tightening, fix the flange of the shaft, and be careful not to damage the nylon gear of the shaft.

3) When assembling the governor valve to the final reduction case, it is unnecessary to dry out the governor valve. However, the governor valve should be assembled after confirming that the seal ring is normal.

NOTE:
When assembling, use special care not to damage the seal ring, and the lip of the oil seal installed inside the case.

4) Before assembling the governor cover, replace the gasket (governor cover) and confirm that the washer is included.

Tightening torque	14 – 17 N·m (1.4 – 1.7 kg-m, 10 – 12 ft-lb)

10) Adjusting the Brake Band

If the following abnormal shifting conditions are noted in a road test, the brake band must be adjusted.

1) Shift state and adjustment

1) The 2nd gear state can be achieved but:
- the engine rpm increase excessively shifting up from 2 to 3.
- a shift delay (over 0.7 sec) accompanies at kickdown from 3 to 2.

If any of these problems occurs, it is attributable to excessive clearance between the reverse clutch drum and brake band: Tighten the adjust screw by turning it clockwise.
2) The 2nd gear state can be achieved, but:
- the shifting shock is too small at shifting up from 1 to 2.
- a braking phenomenon is noted when shifting up from 2 to 3.

Downloaded from www.Manualslib.com manuals search engine

If any of these phenomena are noted, it is attributable to excessively small brake band clearance: Loosen the adjust screw by turning it counter-clockwise.

3) When accelerating, direct shift up from 1st to 3rd occurs:
..... Excessively large clearance.
When shifting up from 2nd to 3rd, tire slip occurs:
..... Excessively small clearance.

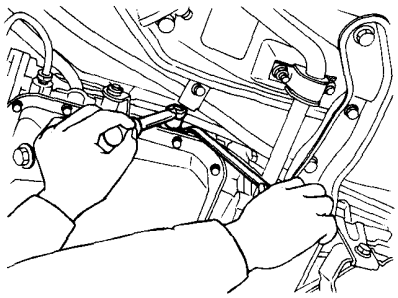

A13-442

Fig. 7-46 Adjusting the adjusting screw

2) Adjustment of the adjusting screw

1) Using a socket wrench, immobilize the end of the 10 mm screw projecting on the left side of the transmission case, and loosen the nut with a double-end wrench.
In the case of occurrence of problems 1) and 2) mentioned previously, perform the adjustment by loosening or tightening the nut within a range of 3/4 turn from this state.

NOTE:

Tool No.	Tool name
398603610	Socket wrench

Do not loosen excessively; otherwise, the band strut on the servo piston will drop off.

2) In case of the occurrence of problem 3) mentioned previously, perform the adjustment as follows:
Adjusting procedure: Tighten adjust screw to 9 N·m (0.9 kg-m, 6.5 ft-lb) torque, then back off two turns.

NOTE:
Do not tighten the adjusting screw with an excessively large torque.

3) With the adjusting screw immobilized, tighten the lock nut to 26±2 N·m (2.7±0.2 kg-m, 20±1.4 ft-lb) torque.

11) Inspection, Removal and Installation of the Transfer Solenoid (4WD Models)

If the 4WD pilot lamp on the instrument panel remains off even when the 4WD pushbutton switch has been depressed, check the transfer solenoid and wiring.
If the 4WD mode is not achieved with the lamp illuminated, the solenoid may be malfunctioning. Check the solenoid and transfer valve as follows.

- **Removal and installation of solenoid (transfer valve)**

■ Removal

1) Open the hood.
2) Disconnect the battery ground cable.
3) Remove the spair tire.
4) Loosen the pitching stopper (to a position just before it comes off).
5) Disconnect the 4WD selector solenoid harness. (Keep the disconnected harness suspended.)

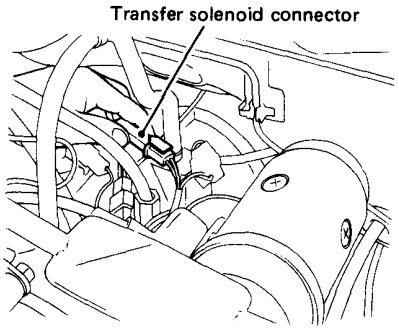

A13-443

Fig. 7-47 Removing the 4WD selector solenoid harness

6) Remove the uppercover. [This is necessary for removing the exhaust pipe (F).]
7) Remove the exhaust pipe (F).
8) Remove the intermediate side cable clamp.
9) Drain the torque converter oil (one liter).
(The oil will not come out of the case when the valve is removed, if one liter of oil has been drained. Measure the drained amount so that the amount to be added after completing the inspection can be easily determined.)
10) Remove the rear crossmember. (To ensure safety, support the oil pan with a transmission jack.)
11) Remove the side cable from the body clip. (Move it downward as far as possible.)
12) Push the transmission to the left. (Insert a piece of wood between the clearance thus achieved.)
13) Remove the solenoid valve.

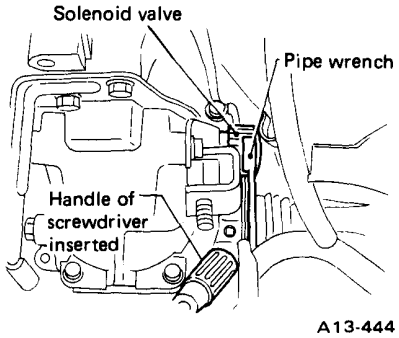

A13-444

Fig. 7-48 Removing the solenoid valve

■ Installation
Reverse the sequence of removal procedure.

12) Disassembly, Inspection and Assembly of the Transfer Section (4WD Model)

1) Disassembly

1) Completely drain the AFT.
2) Remove the transfer solenoid. Refer to the Removal and Installation of the Transfer Solenoid for details.
3) Remove the temperature switch harness from the clamp.
4) Remove the eight 8 mm bolts and extract the transfer section and extension ASSY as a unit from the intermediate case.

NOTE:
a. Be careful not to drop the internal component parts.
b. Place a container to collect the remaining oil.

Downloaded from www.Manualslib.com manuals search engine

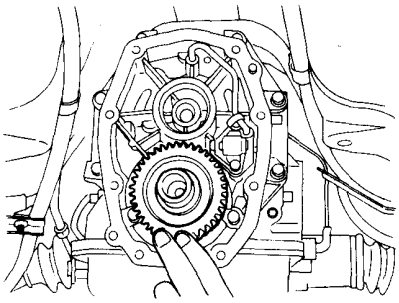

A13-445

Fig. 7-49 Removing the extension ASSY

5) Separate the clamp from the pipe at the bent position and disconnect the transfer pipe from the valve body and intermediate case.

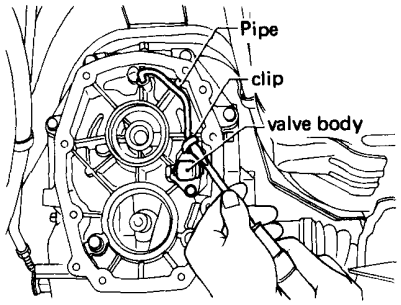

A13-446

Fig. 7-50 Removing the clip and pipe

6) Remove the two 6 mm bolts securing the valve body.
7) Remove the E-clip and remove the transfer valve from the body.

NOTE:
Be careful not to lose the coil spring.

2) Inspection

- Visually check all peripheries to ensure they are free from burrs, dirt, metal chips, etc.
- Cleaning all parts by washing them and install them in the valve body. Ensure these parts move smoothly without binding.
- If the valve body or the frictional surface of the valve is faulty, replace with a new one.

3) Assembly

1) To assemble the transfer valve parts, refer to the following figure.

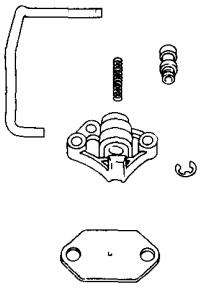

A13-447

Fig. 7-51 Valve component parts

2) Attach the valve body to the intermediate case and tighten with the two 6 mm bolts.

Tightening torque	6 – 8 N·m (0.6 – 0.8 kg-m, 4.3 – 5.8 ft-lb)

NOTE:
a. Do not forget to install the plate.
b. Pay attention to the direction of the valve body.
c. Do not forget to install the clamp.

3) Insert the transfer pipe into the intermediate case and tighten the clamp by bending.

NOTE:
Always use a new pipe and clamp.

4) To assemble the transfer unit, reverse the order of disassembly.

NOTE:
Be sure to install the rear drive shaft seal ring.

5) Replenish ATF and check the level.

13) Inspection of the Control Valve Assembly

1) Disassembly

1) Raise the vehicle with a jack and drain ATF.
2) Disconnect the vacuum hose, and remove the downshift solenoid and vacuum diaphragm.

NOTE:
Also remove the diaphragm rod together with the vacuum diaphragm.

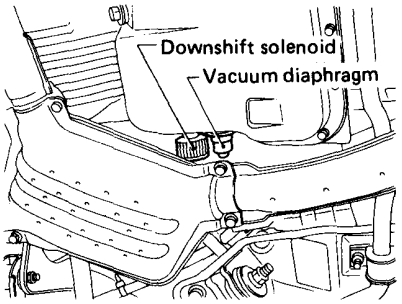

A13-448

Fig. 7-52 Removing the solenoid, diaphragm, etc.

3) Remove the converter oil pan. Be sure to place a container under the oil pan to collect ATF remaining in the oil pan.
4) Disconnect the servo pipes.

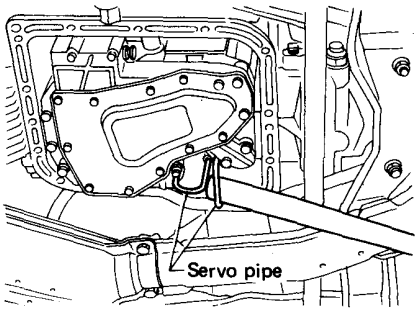

A13-449

Fig. 7-53 Removing the servo pipe

5) Remove the six 6 mm bolts (shown by the arrow) and detach the control valve ASSY.

NOTE:
a. Be careful not to drop the manual valve.
b. Be careful not to damage the oil strainer.
c. Be careful not to allow dust or dirt from getting into the valve ASSY.

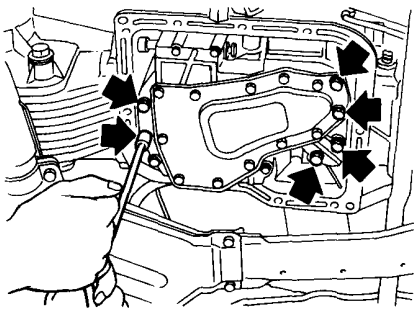

A13-450

Fig. 7-54 Removing the control valve

Downloaded from www.Manualslib.com manuals search engine

2) Inspection

Refer to the Control Valve ASSY section.

3) Assembly

1) Install the control valve ASSY.

NOTE:
Be sure to tighten the bolts equally – one at a time – using a torque wrench.

Tightening torque	6 – 8 N·m (0.6 – 0.8 kg-m, 4.3 – 5.8 ft-lb)

2) Connect the servo pipes.

NOTE:
Always install new servo pipes.

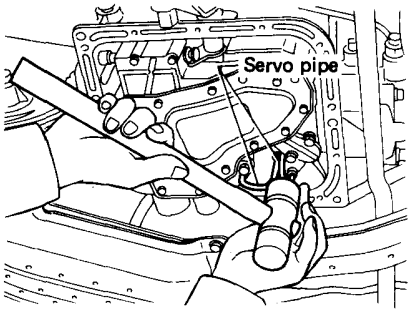

Fig. 7-55 Installing the servo pipe

3) Align the mating surfaces of the converter oil pan and converter to ensure no clearance exists at any point. The gasket should not be used at this point.
4) Wipe any oil from the mating surfaces and install the converter oil pan with the gasket in place.

NOTE:
Always use a new gasket.

Tightening torque	3.4 – 4.4 N·m (0.35 – 0.45 kg-m, 2.5 – 3.3 ft-lb)
Drain plug tightening torque	25 N·m (2.5 kg-m, 18 ft-lb)

5) Using the Diaphragm Rod Gauge Set, check the length of the diaphragm rod is within specifications and, if the length is correct, install the vacuum diaphragm.
For selection of a suitable diaphragm rod, refer to "5. TRANSMISSION CASE SECTION".
6) Install the downshift solenoid and connect the vacuum hose.

NOTE:
Do not forget to install the "O" ring.

7) Replenish ATF and check the oil level. The amount of ATF to be replenished is approximately 4 liters (4.2 US qt, 3.5 Imp qt).

2. Various Test Methods

1) Stall Tests and Interpretation of Test Results

The stall test is of extreme importance in diagnosing the condition of the automatic transmission and the engine. It should be conducted to measure the engine stall speeds in all shift ranges except the P and N ranges.

1) Purposes of the stall test

1) To check the operation of the automatic transmission clutch and brake band.
2) To check the operation of the torque converter.
3) To check engine performance.

2) Test methods

Prior to the stall tests, check to ensure the carburetor throttle valve opens fully, and that the levels of engine oil, cooling water and ATF are correct. Set the select lever in the P range and idle the engine at 1,200 rpm for several minutes until the ATF reaches approximately 60°C (140°F).
1) Install an engine tachometer at a location visible from the driver's compartment and mark the stall speed range of 2,100 to 2,300 on the tachometer scale.

Stall speed	2,100 – 2,300 rpm

2) Place the wheel chocks at the front and rear of all wheels and engage the parking brake.
3) Move the manual linkage to ensure it operates properly, and shift the select lever to the D range.
4) While forcibly depressing the foot brake pedal, gradually depress the accelerator pedal until the engine operates at full throttle.
5) When the engine speed is stabilized, read that speed quickly and release the accelerator pedal.
6) Shift the select lever to Neutral, and cool down the engine by idling it for more than one minute.
7) Record the stall speed.
8) Perform the stall tests with the select lever in the 2, 1 and R ranges.

NOTE:
a. Do not continue the stall test for MORE THAN FIVE SECONDS at a time (from closed throttle, fully open throttle to stall speed reading). Failure to follow this instruction causes the engine oil and ATF to deteriorate and the clutch and brake band to be adversely affected.
Be sure to cool down the engine for at least one minute after each stall test with the select lever set in the P or N range and with the idle speed lower than 1,200 rpm.
b. If the stall speed is higher than the specified range, attempt to finish the stall test in as short a time as possible, in order to prevent the automatic transmission from sustaining damage.

Downloaded from www.Manualslib.com manuals search engine

3) Interpretation of stall test results

Stall speed	Assessment	Cause	Remarks
Higher than 2,300 rpm	Slippage of automatic transmission clutch, brake band, etc. (Further stall tests are not necessary.)	• Low line pressure (If stall speed is higher than specified range at any shift position). • One-way clutch slippage. (If stall speed is higher than specified range only in the D range.) • *1: Brake band slippage (If stall speed is higher than specified range only in the 2 range.) • *2: Slippage of low & reverse brake or reverse brake (If stall speed is higher than specified range only in the R range.)	*1: Brake band slippage cannot be judged by stall tests; however, if it slips, engine speed is higher than specified rpm while car is being driven in the 2 range. *2: Slippage of reverse clutch/ low & reverse brake can be judged by road tests. If engine compression can be used as a brake with select lever in the 1 range, reverse clutch is slipping; if it cannot be used, low & reverse brake is slipping.
2,100 – 2,300 rpm	• Control members are in good order in the D, 2, 1 and R ranges. • Engine in good order.		• One-way clutch can be checked for condition by road tests.**
Lower than 2,100 rpm	• Throttle not fully opened. • Erroneous engine operation or one-way clutch slippage.		
** Road test	• Acceleration is not properly made up to 50 km/h (31 MPH). • Car speed does not attain more than 80 km/h (50 MPH). • Operation is not proper at all car speeds.	One-way clutch slippage. *3: One-way clutch jamming. Erroneous engine operation.	*3: Abnormal temperature rise occurs.

Downloaded from www.Manualslib.com manuals search engine

2) Road Test

Road tests should be conducted to properly diagnose the condition of the automatic transmission.

1) Speed change characteristics

The standard speed change characteristics are indicated in the following table.

Negative pressure -kPa (-mmHg, -inHg)	Shift	Car speed km/h (MPH)
Kickdown 4.0 – 6.7 (30 – 50, 1.18 – 1.97)	$D_1 \rightarrow D_2$	50 – 59 (31 – 37)
	$D_2 \rightarrow D_3$	89 – 99 (55 – 62)
	$D_3 \rightarrow D_2$	82 – 92 (51 – 57)
	$D_2 \rightarrow D_1$	37 – 47 (23 – 29)
Half-throttle 26.7 (200, 7.87)	$D_1 \rightarrow D_2$	15 – 22 (9 – 14)
	$D_2 \rightarrow D_3$	41 – 51 (25 – 32)
	$D_3 \rightarrow D_2$ or $D_3 \rightarrow D_1$	13 – 22 (8 – 14)
	$D_2 \rightarrow D_1$	10 – 17 (6 – 11)
Full-throttle 4.0 – 6.7 (30 – 50, 1.18 – 1.97)	*$1_2 \rightarrow 1_1$	41 – 51 (25 – 32)
Minimum throttle 57.3 – 60.0 (430 – 450, 16.93 – 17.72)	*$1_2 \rightarrow 1_1$	41 – 51 (25 – 32)

*1: Reduce the car speed by shifting to 1st range from D range [while car speed is 50 km/h (31 MPH) or thereabout].

2) Shift characteristics

Pay careful attention to ensure the shift is made smoothly at the proper car speed at which shifting begins.
1) Shifting shocks are encountered or smooth shifting does not occur.
2) Shifting occurs slowly in response to the condition of the engine throttle.
The above two problems are due to incorrect throttle pressure or other factors involved in throttle pressure.

3) Checking for shift patterns

1) In the D range, shifting should be made as $D_1 \rightarrow D_2 \rightarrow D_3$ smoothly and vice versa; it should not be made in the R range.
2) Kick down should activate properly.
3) When the select lever is shifted from the D range to the 2 or 1 range, shifting should be made as $D_2 \rightarrow 2\,(1_2) \rightarrow 1_1$. Engine compression can be utilized as a brake at 1_2 and 1_1.
4) Shifting should not occur while the select lever is at the 1 range.
5) With the shift lever in the 2 range, the 2nd gear is engaged and 2nd speed is maintained.
6) The select lever should be locked when placed in the P range.

In road tests, if any abnormality is noticed in the 2 range, it is necessary to adjust the brake band. If by inspection the brake band is in good order, check the servo piston for any sign of oil leakage from the seal.

4) Check for the 4WD function

With the car in the 4WD mode, turn the vehicle in a circle while lightly depressing the accelerator pedal, and then shift the vehicle into the FWD mode. When the vehicle is shifted into the FWD mode, a light shock should be felt.
Whenever the transfer clutch facing is replaced with a new one, the above test should be conducted, for the run-in purpose, two to three times with the vehicle set in the 4WD mode and with the steering wheel fully turned.

3) Line Pressure Tests

If the clutch or the brake band shows a sign of slippage or shifting sensation is not correct, the line pressure should be checked.

- Excessive shocks during upshifting or shifting takes place at a higher point than under normal circumstances, may be due to the line pressure being too high.
- Slippage or inability to operate the car may, in most cases, be due to loss of oil pressure for the operation of the clutch, brake band or control valve.

1) Measuring the line pressure

1) Temporarily attach the Oil Pressure Gauge ASSY to a suitable place in the driver's compartment, remove the blind plug located in front of the toeboard and pass the hose of the Gauge ASSY to the engine compartment.

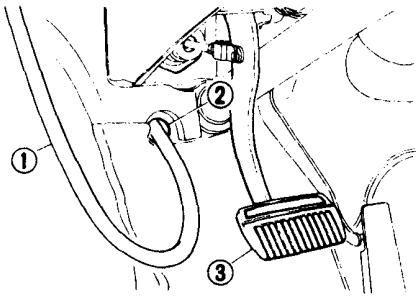

1 Pressure gauge hose
2 Hole in toe board (blank cap hole)
3 Brake pedal

A13-223

Fig. 7-56 Measurement of line pressure

Downloaded from www.Manualslib.com manuals search engine

Tool No.	Tool Name
398573600	Oil pressure gauge ASSY

2) Using the socket wrench (7), remove the pressure check plug from transmission cover (or intermediate case.)

3) Attach an oil pressure adapter to the pressure check plug hole in transmission cover (or intermediate case.)

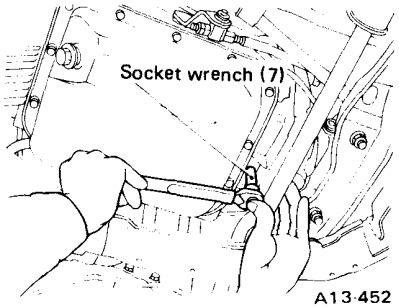

Fig. 7-57 Removing the pressure check plug

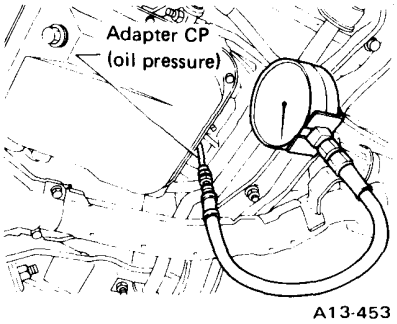

Fig. 7-58 Installing the oil pressure adapter

Tool No.	Tool Name
498897000	Oil pressure adapter
498597000	Socket wrench (7)

4) Connect the oil pressure adapter and the tip end of the gauge ASSY.

5) Run the engine and check the line pressures with the engine at a minimum-throttle and full-throttle operations.

2) Line pressure in each select range

The following table indicates the relationship between the line pressure and throttle position in each select range.

Unit: kPa (kg/cm², psi)

Throttle position / Range	Full throttle -4.0 – 6.7 kPa (-30 – 50 mmHg, -1.18 – 1.97 inHg)		Minimum throttle *2	
	Before*1 cutdown	After cutdown	Before cutdown	After cutdown
D	834 – 981 (8.5 – 10.0, 121 – 142)	539 – 637 (5.5 – 6.5, 78 – 92)	294 – 392 (3.0 – 4.0, 43 – 57)	294 – 392 (3.0 – 4.0, 43 – 57)
2	1,000 – 1,157 (10.2 – 11.8, 145 – 168)	579 – 677 (5.9 – 6.9, 84 – 98)	1,000 – 1,157 (10.2 – 11.8, 145 – 168)	579 – 677 (5.9 – 6.9, 84 – 98)
R	1,373 – 1,569 (14.0 – 16.0, 199 – 228)		461 – 559 (4.7 – 5.7, 67 – 81)	

NOTES:

***1: The "cutdown point" refers to those points where the line pressure in each shift range (1, D, 2 and R) changes in steps or where the pressure modifier valve activates. The "before cutdown" refers to the state of the line pressure in which the engine is running at low speeds and the car speed is below approximately 15 km/h (9 MPH), while the "after cutdown" refers to the state of line pressure in which the engine is running at high speeds and the car speed is above approximately 35 km/h (22 MPH).**

***2: The line pressure, while the engine is idling, corresponds to the oil pressure of the "before cutdown" with the engine at the minimum throttle operation.**

3) Interpretation of line pressure

1) Car in the FWD (front-wheel drive) mode

	Symptom	Probable cause
Engine at idle (1,500 rpm) in N range	Low	• Oil pump worn or clearance improperly adjusted. • Leakage in oil pressure circuit. • Pressure regulator valve inoperative.
	High	• Leakage at vacuum hose or vacuum diaphragm or diaphragm too long. • Pressure regulator valve jamming.
Engine at full throttle	Pressure will not rise.	• If pressure fails to rise even though vacuum pressure drops, check to see if diaphragm rod was not installed.
	Pressure rises but does not enter specified range.	• In most cases problems may be due to jamming of vacuum throttle valve, pressure regulator valve or pressure regulator plug.

NOTE:

Change of the diaphragm rod by one rank or [0.5 mm (0.020 in)] causes the line pressure to change approximately 29 kPa (0.3 kg/cm², 4 psi).

Downloaded from www.Manualslib.com manuals search engine

2) Car in the 4WD mode
If an abnormality occurs in the 4WD operation, check the line pressure in the transfer clutch oil circuit to determine the cause of the problem.

	Symptom	Probable cause
Engine at idle (1,500 rpm) in Neutral	Pressure difference between 4WD and FWD operation modes is more than 29 kPa (0.3 kg/cm², 4 psi).	• Transfer pipe disconnected. • Rear shaft seal ring not installed.
	Pressure difference between 4WD and FWD operation modes is less than 29 kPa (0.3 kg/cm², 4 psi).	• Solenoid or transfer valve inoperative.

4) Governor Pressure Test

If the governor valve operation is questionable as a result of road tests, conduct the governor pressure test.
1) Remove the test plug from the right side of the final reduction case and, in its place, install the Adapter.

Tool No.	Tool Name
398893600	Adapter

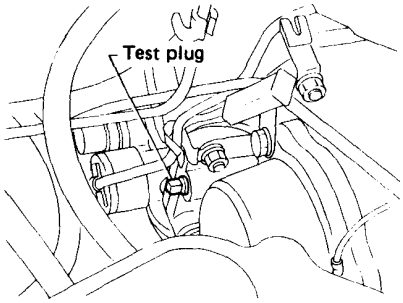

A13-454

Fig. 7-59 Checking governor pressure

2) Install the Gauge ASSY in a suitable location in the driver's compartment and pass the gauge hose to the engine compartment and attach the Adapter to the hose end.
3) Warm up the engine by idling for several minutes until the oil reaches its operating temperature. While the car is being driven, shift to the 2 range and check the governor pressure.

Standard governor pressure

Car speed km/h (MPH)	Governor pressure kPa (kg/cm², psi)
Less than 10 (6)	0 (0, 0)
40 (25)	127 – 186 (1.3 – 1.9, 18 – 27)
80 (50)	363 – 461 (3.7 – 4.7, 53 – 67)

[For reference]
Locations of other oil pressure check holes.

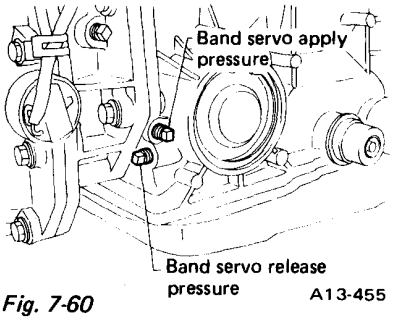

A13-455

Fig. 7-60

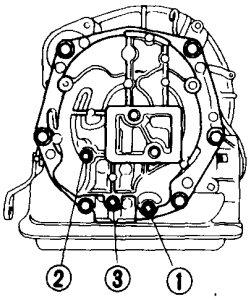

1 Line pressure
2 Reverse clutch pressure
3 Forward clutch pressure

A13-337

Fig. 7-61

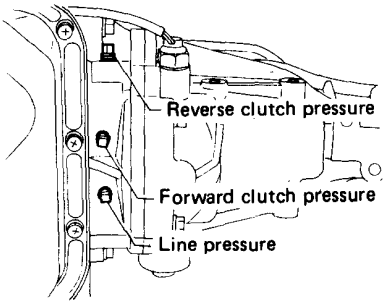

A13-456

Fig. 7-62

5. Dismounting

1) Open engine hood and hold it securely by a stay.
2) Remove spare wheel.

NOTE:
Do not put the spare wheel or a hand on the air cleaner case to prevent damage of air cleaner case.

3) Disconnect battery cable from negative (-) terminal.
4) Remove spare wheel supporter.
5) Disconnect diaphragm vacuum hose.
6) Disconnect speedometer cable, and unfasten clip on speedometer cable.
7) Disconnect wiring connections.
a. Back-up lamp switch connector.
b. Ground cable (on the car body).
c. Starter harness.

NOTE:
Do not disconnect the battery cable from the starter.

8) Remove four bolts connecting torque converter to drive plate through timing hole.

NOTE:
Be careful that the bolts do not fall into the converter housing.

9) Disconnect oil cooler hose from transmission.

NOTE:
To prevent the oil from running out of the hose, plug the open end of the hose.

10) Remove starter with battery cable, and put it on bulkhead.
11) Remove upper bolts which secure engine to transmission; loosen lower nuts.
12) Loosen nut [by approximately

Downloaded from www.Manualslib.com manuals search engine

10 mm (0.39 in)] which retains pitching stopper to the transmission side, and tighten nut by an equal amount on the engine side. Slightly tilt engine backward in order to facilitate removal of transmission.

NOTE:
Do not tighten the nut more than 10 mm (0.39 in).

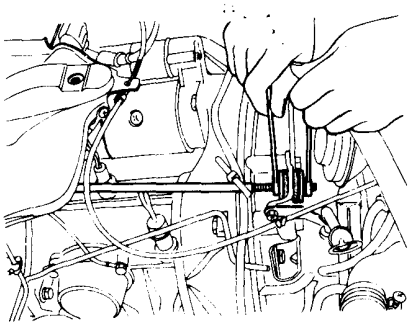

A4-113

Fig. 7-63

13) Disconnect O_2 sensor harness and unclamp it.
14) Raise the front end of car by placing a jack on the jack-up point in front of side sill.
15) Remove front exhaust pipe ASSY as follows:
a. Disconnect hot air intake hose.
b. Loosen nuts which secure exhaust pipe ASSY to the exhaust port of engine.
c. Remove bolts which secure front exhaust pipe to rear exhaust pipe.
d. Remove bolts which secure front exhaust pipe to bracket on car body.
e. Supporting front exhaust pipe ASSY, remove nuts from the exhaust port of engine. Exhaust pipe ASSY can now be removed.

NOTE:
Be careful not to strike the oxygen sensor against any adjacent parts during removal.

16) Drain out ATF and then disconnect oil supply pipe.

NOTE:
Be careful not to damage the O-ring.

17) Move the select lever to the "P" position, and at this point, mark the location of the connector nut and separate the manual lever from the linkage rod.
18) Remove stabilizer.
19) Remove bolts which secure left and right transverse links to front crossmember, and lower transverse links.
20) Drive both left and right spring pins out of axle shaft.

NOTE:
Discard and do not re-use the spring pins.

21) Pushing wheels toward the outer side, separate axle shaft from drive shaft.
22) Remove mount retaining nut from rear crossmember.
23) Securely support transmission by placing a jack under it.
24) Remove crossmember.
25) Remove two nuts which secure engine to transmission, and move transmission away from engine just enough so that transmission mainshaft does not interfere with engine.
Lower jack and dismount transmission, exercising care not to strike it against any adjacent parts.

6. Disassembly, Inspection and Assembly

1 GENERAL DESCRIPTION

When disassembling or assembling the automatic transmission, observe the following instructions.
1) Workshop
Provide a place that is clean and free from dust. Principally the conventional workshop is suitable except for a dusty place.
In a workshop where grinding work, etc. which produces fine particles is done, make independent place divided by the vinyl curtain or the equivalent.
2) Worktable
The size of 1 x 1.5 m (40 x 60 in) is large enough to work, and it is more desirable that its surface be covered with flat plate like iron plate which is not rusted too much.
3) Cleaning of exterior
Clean the exterior surface of transmission with steam and/or kerosene prior to disassembly, however it should be noted that a cap be placed on the airbreather to prevent infiltration of the steam into the transmission and also the cleaning job be done away from the place of disassembly and assembly.
4) Disassembly, assembly and cleaning
a. Disassemble and assemble the transmission while inspecting the parts in accordance with the Troubleshooting.
b. During job, don't use gloves.
Don't clean the parts with rags: Use chamois or nylon cloth.
c. Pay special attention to the air to be used for cleaning.
Get the moisture and the dust rid of the air as much as possible.
d. Complete the job from cleaning to completion of assembly as continuously and speedily as possible in order to avoid occurrence of secondary troubles caused by dust. When stopping the job unavoidably cover the parts with clean chamois or nylon cloth to keep them away from any dust.
e. Use kerosene, white gasoline or the equivalent as washing fluid.
Use always new fluid for cleaning the automatic transmission parts and never reuse. The used fluid is usable in disassemble and assemble work of engine and manual transmission.
f. Although the cleaning should be done by dipping into the washing fluid or blowing of the pressurized washing fluid, the dipping is more desirable. Assemble the parts immediately after the cleaning without exposure to the air for a while. Besides in case of washing rubber parts, perform the job quickly not to dip them into the washing fluid for long time.
g. Apply the automatic transmission fluid (ATF) onto the parts immediately prior to assembly, and the specified tightening torque should be observed carefully.
h. Use vaseline if it is necessary to hold parts in the position when assembling.
i. Refer to the Service Data in Chapter 2. for the serviceable limit.

Downloaded from www.Manualslib.com manuals search engine

j. Replace gaskets, seals, lock washers, staking nuts, servo apply pipe and servo release pipe with new ones whenever they are disassembled.
k. Drain ATF and differential gear oil into a saucer so that the conditions of fluid and oil can be inspected.

2 TORQUE CONVERTER SECTION

As torque converter is welded all around it, it is impossible to disassemble it.

1) Removal

1) Remove oil pan drain plug and drain the ATF.

NOTE:
Check the volume and state (color, smell, etc.) of the ATF.

2) Take out the torque converter ASSY from converter housing taking care of the following.
a. Prepare the appropriate saucer under converter housing to receive the ATF which pours out from the torque converter ASSY, turbine shaft and/or oil pump drive shaft.
b. When taking out torque converter, turbine shaft and oil pump drive shaft may come out together.
In this case take them out straight and gradually not to bend them.

2) Inspection

1) Check the one-way clutch function of stator with the spline of stator shaft engaged into stator and replace if defective.
It is normal that when turning stator shaft counterclockwise, one-way clutch is engaged, and when clockwise, the clutch is released.
2) Check for the exterior damage, oil leakage, bend and depression, and replace if defective.
3) Completely take off the rust on the pilot and/or sleeve of converter.
4) If the ATF is soiled or excessively deteriorated, wash the interior of torque converter as follows.
a. Take off the remained ATF in torque converter.
b. Pour 0.5ℓ (0.5 US qt, 0.4 Imp qt) of gasoline. (unleaded gasoline or kerosene)
c. Blow in the compressed air to wash the interior and then drain the gasoline.
d. Pour 0.5ℓ (0.5 US qt, 0.4 Imp qt) of ATF.
e. Blow in the compressed air and drain the ATF.

3) Installation

Install torque converter straight onto shaft while turning it slowly.

3 DISASSEMBLING THE ENTIRE AUTOMATIC TRANSMISSION

1) Transfer Section (4WD Models)

1) Remove the rear engine mount (rubber cushion) and place the transfer unit on a work bench with the oil pan facing down.

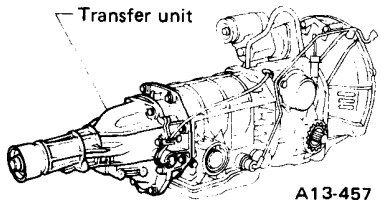

Fig. 7-64 Transfer unit

2) Remove the solenoid from the transfer unit by turning it by hand.

NOTE:
a. Be sure to remove the solenoid first.
b. Ensure that the harness is detached from the clamp before separating the transfer unit from the engine.
c. Remove the "O" ring together with the harness.

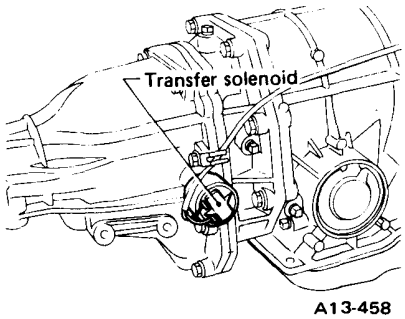

Fig. 7-65 Removing the solenoid

3) Remove the temperature switch with a wrench.

NOTE:
Ensure that the harness is detached from the clamp in advance.

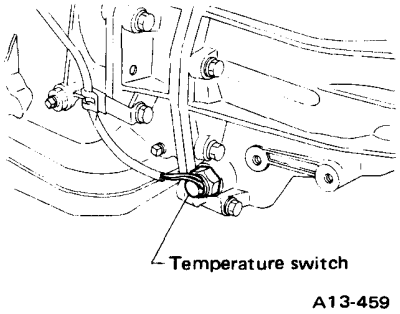

Fig. 7-66 Removing the temperature switch

4) Remove the extension ASSY.
To do this, remove the eight 8 mm bolts and extract the transfer section together with the extension ASSY.

NOTE:
a. Place a container to receive ATF remaining in the extension.
b. Be careful not to drop the rear drive gear thrust plate and transfer drive gear ASSY.
c. Remove the washer from the bearing bore on the upper side of the intermediate case.
d. Do not place the opening of the extension ASSY down, as this may cause the rear shaft ASSY to drop.

2) Transmission Case Section

1) Remove the rear extension ASSY. (4WD)
2) Drain AFT. (AFT should be drained when the transmission is dismounted from the vehicle.)
3) Carefully pull the turbine output shaft and oil pump drive shaft straight out.
If they are hard to remove by hand, wrap their splines with a cloth or vinyl tape and extract them using pliers. Be careful not to damage the splines.
4) Disconnect the oil cooler pipe from the transmission case.
5) Remove the lead wire clips.
To do this, remove the nuts which secure the transmission case to the final reduction case, and remove the

Downloaded from www.Manualslib.com manuals search engine

downshift solenoid, transfer solenoid and temperature switch lead wire clips.
6) Remove the vacuum pipe and ground lead wire.
To do this, remove the bolts which retain the governor cover and disconnect the vacuum pipe and ground lead wire.
7) Remove the oil supply pipe.
Disconnect the oil supply pipe from the transmission case. Ensure that ATF is drain out before disconnecting the pipe.

NOTE:
Be careful not to lose the "O" ring located at the end of the pipe.

8) Drain the differential gear oil completely.
9) Also drain ATF remaining in the transmission case and place the transmission on a bench with the housing down, as shown in the figure.

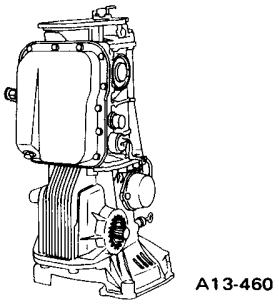

Fig. 7-67 Placing the transmission on a bench

NOTE:
a. The automatic transmission and the differential sections are not separated from each other under normal circumstances.
b. However, if the two must be separated, follow the disassembly procedure of the final reduction case section to separate the two, and place the automatic transmission section on Stand (399933610).

3) Final Reduction Case Section

1) Remove extension ASSY. (4WD)
2) Remove oil pan and control valve. (4WD)
3) Wrap vinyl tape around the spline portions of the drive pinion rear end in order not to damage the oil seal. (4WD)
4) Separate the transmission case section from the final reduction case section.

4 TRANSFER CASE SECTION (4WD)

1) Disassembly

1) Remove the washer from the upper surface of the intermediate case at the bearing bore location.

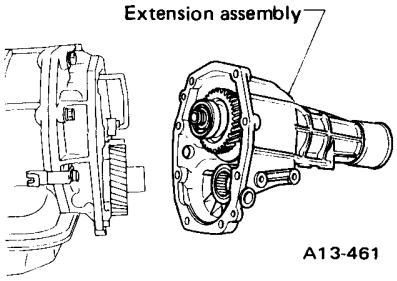

Fig. 7-68 Removing the extension ASSY

2) Remove the rear shaft ASSY from the extension case.

NOTE:
Be careful not to damage the oil seal located at the rear of the extension.

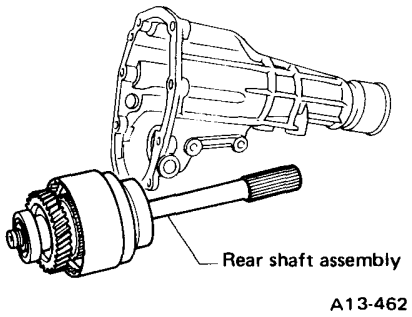

Fig. 7-69 Removing the rear shaft ASSY

3) Remove the seal ring.
4) Using Removers (899864100) and (499717000), drive out the ball bearing (20x52x15), washer (20x38x4) and transfer driven gear UN.

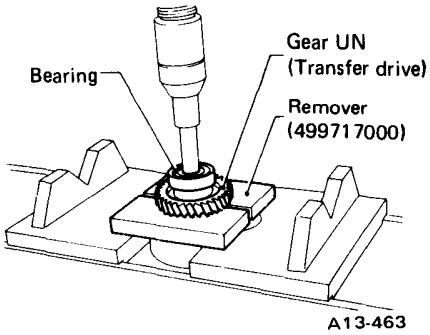

Fig. 7-70 Removing the ball bearing and driven gear UN

5) Remove drum AY using Remover (499717000).

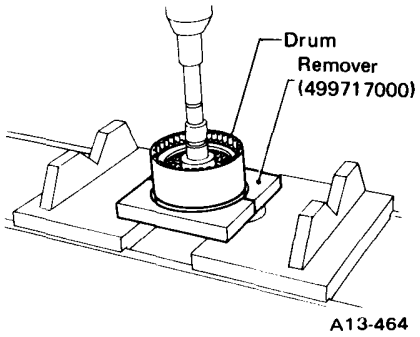

Fig. 7-71 Removing the drum

6) Drive the ball bearing (30x72x12) out, using Remover (499717000).

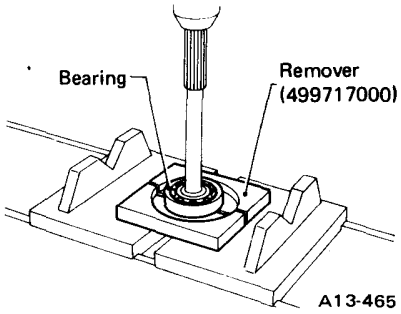

Fig. 7-72 Removing the ball bearing

7) Disassemble the transfer clutch ASSY. Pry off the snap ring (inner: 98.5) and remove the front pressure plate, three plates UN3, two plates 3 and rear pressure plate.

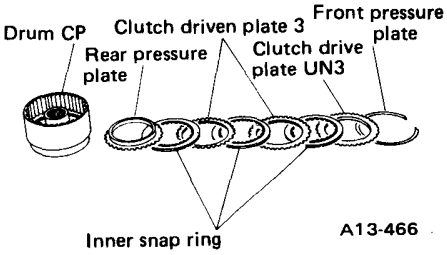

Fig. 7-73 Component parts of the transfer clutch ASSY

Downloaded from www.ManualsHub.com manuals search engine

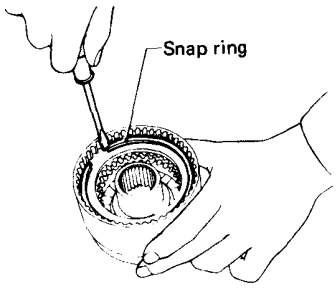

A13-467

Fig. 7-74 Removing the snap ring

2) Inspection

Wash the disassembled parts and check for the following:

1) Bearings

Replace any bearing if:

a. The balls, outer race or inner race are damaged or rusted.
b. Various parts of the bearing are worn excessively.
c. The bearing does not spin smoothly or is noisy even after being lubricated with gear oil.
d. Other abnormalities are noticed.

2) Transfer gear

Backlash	0.051 – 0.125 mm (0.0020 – 0.0049 in)

Replace the transfer gear if:

a. The surface is chipped, worn or otherwise damaged.
b. The roller surface is worn or otherwise damaged.
c. The bore of the transfer driven gear UN or the end face is damaged.

3) Rear drive shaft

Repair or replace if the sliding surface of the transfer driven gear UN is excessively damaged.

4) Plates UN3 and 3

Replace if plates or surfaces are worn* or damaged.

NOTE:

***: If the measured clutch clearance during disassembly exceeds 1.3 mm (0.051 in).**

- **Always replace plates UN3 together with the pressure plate and adjacent steel plates.**

5) Extension oil seal (35x50x11)

Replace the oil seal if the sealing lip is deformed, hardened, worn or otherwise damaged.

6) Rear drive shaft seal ring

Replace if the seal ring is worn or otherwise damaged.

3) Assembly

1) Transfer clutch ASSY

Apply a coat of recommended ATF to all parts and assemble all parts in the order of disassembly.

a. Assemble the bearing (30x72x19) and drum ASSY to the rear shaft.
b. Install the rear pressure plate, plates 3, plates UN3 and front pressure plate.

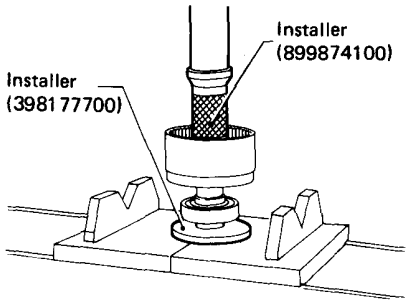

A13-468

Fig. 7-75 Assembling the drum ASSY

NOTE:

a. Use a suitable Installer when driving the drum into place.

Special tool:	**Installer 899874100**
Special tool:	**Installer 499277000**
Special tool:	**Installer 398177700**

b. Direct compressed air into the oil hole to ensure that the piston moves properly.

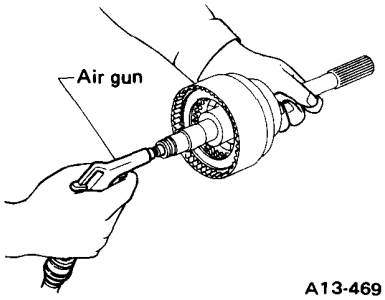

A13-469

Fig. 7-76 Checking the piston for proper movement

NOTE:

a. Pay attention to the directions of the front and rear pressure plates.
b. Always use recommended ATF to coat parts with oil.

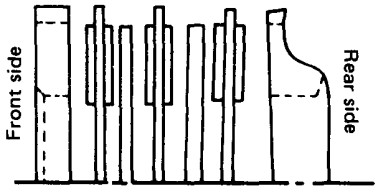

A13-470

Fig. 7-77 Relative locations of the pressure plates

c. After parts have been assembled, measure the clearance between the outer snap ring (98.5) and front pressure plate and select a suitable pressure plate to ensure the clearance is within specifications.

Transfer clutch clearance	0.4 – 0.8 mm (0.016 – 0.031 in)

Available front pressure plates

Part number	Plate thickness mm (in)
447677000	4.7 (0.185)
447677001	5.0 (0.197)
447677002	5.3 (0.209)
447677003	5.6 (0.220)
447677004	5.9 (0.232)

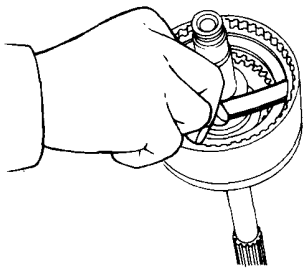

A13-471

Fig. 7-78 Measuring the clearance

NOTE:

Direct compressed air through the oil hole to move the drum two to three times.

2) Using the installer, install the transfer drive gear UN, washer (20x38x4) and ball bearing (20x52x15).

Special tool:	Installer	398177700
Special tool:	Snap ring press	899754102

Downloaded from www.Manualslib.com manuals search engine

NOTE:
Before installing, apply a coat of recomended ATF to the sliding surfaces of transfer drive gear UN and rear drive shaft.

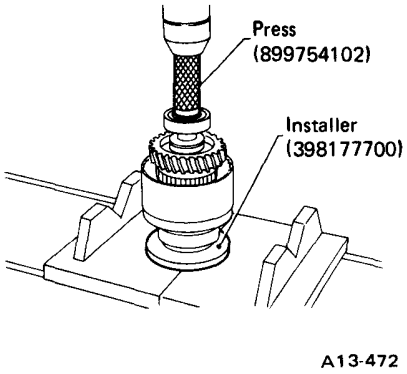

Fig. 7-79 Installing gear UN and ball bearing

3) Install the seal ring onto the rear drive shaft.
4) Install the rear shaft ASSY in the extension case.

NOTE:
a. Be careful not to damage the bushing and oil seal near the rear end of the rear drive shaft.
b. After the rear shaft ASSY has been installed, do not place the opening of the case down as this may cause the rear shaft ASSY to drop.

5) Select a suitable washer (42x51xt) so that the clearance between the rear shaft ASSY and intermediate case is with specifications.

Standard clearance between rear shaft ASSY and intermediate case	0 – 0.3 mm (0 – 0.012 in)

a. Measure dimension "m" (shown in the figure) using Depth Gauge (498147001) and Low & Reverse Brake Gauge (398643600).

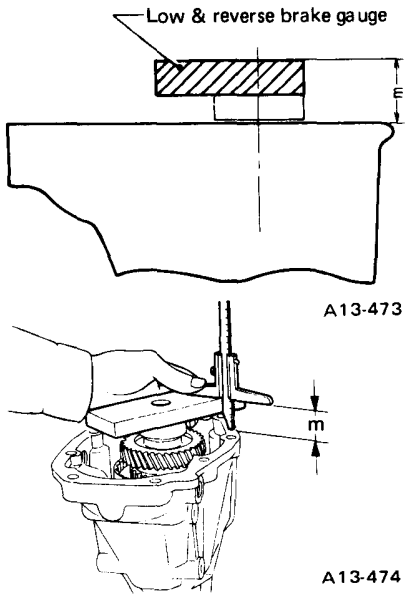

Fig. 7-80 Measruing dimension "m"

b. Using the same tools described in item a. above, measure dimension "M".

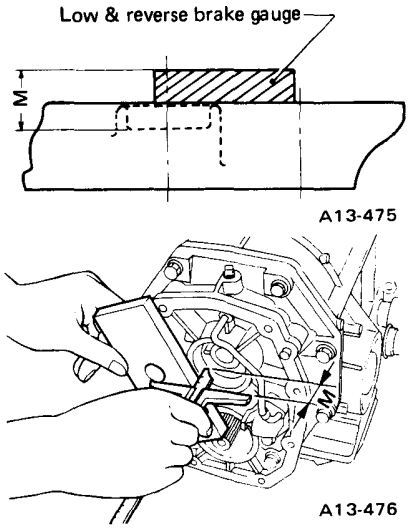

Fig. 7-81 Measuring dimension "M"

c. The thickness (t) of the washer (42x51xt) can be determined by the following equation:
t = (M + 0.2) - (0 to 0.3) - m
Select suitable washers (up to three pieces) from the table on the right to obtain the specified thickness.

Part number	Thickness mm (in)
803242010	0.2 (0.008)
803242011	0.5 (0.020)

6) Install the rear drive gear thrust plate and transfer drive gear CP onto the intermediate case.

NOTE:
When installing the thrust plate, be sure to align the notch in the plate with the mounting bolt.

5 TRANSMISSION CASE SECTION

1) Disassembly

1) Remove the converter oil pan.
2) Remove the downshift solenoid and vacuum diaphragm.

NOTE:
a. Also remove the diaphragm rod.
b. Remove each O-ring at the same time.

3) Remove the servo apply pipe and servo release pipe.
4) Remove the control valve ASSY.
5) Remove the transfer valve.
To remove, separate the bending portion of the transfer pipe clip from the transfer pipe, disconnect the pipe and remove the two bolts which secure the transfer clutch body.
For disassembly, inspection and inspection of the transfer valve, refer to the instructions under the heading "On-Car Service".

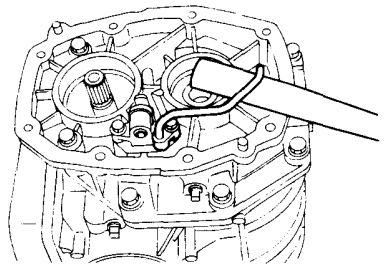

Fig. 7-82 Removing the transfer pipe

NOTE:
Always install new transfer pipe and its clip during each ASSY.

6) Remove the oil pump ASSY.
a. Tighten the adjusting screw until the reverse clutch is lightly held by the brake band.
b. Remove bolts which secure transmission cover (intermediate case) and, using a plastic hammer, lightly tap the periphery of the case until the oil pump ASSY is removed.

Downloaded from www.Manualslib.com manuals search engine

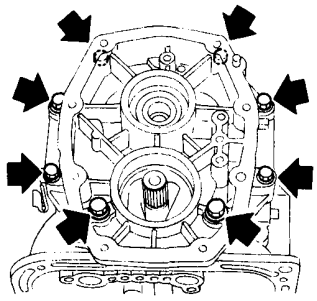

A13-478

Fig. 7-83 Removing the intermediate case

NOTE:

a. Be careful not to lose the thrust washer located at the end of the oil pump carrier.

b. There are six needle thrust bearings, three thrust washers and three toothed thrust washers in the removal steps until 16). Be careful not to lose these parts during disassembly.

7) Move the transfer drive shaft upward and remove transfer coupling from the rear spline of the drive pinion. Then, extract the transfer drive shaft as shown in the figure below.

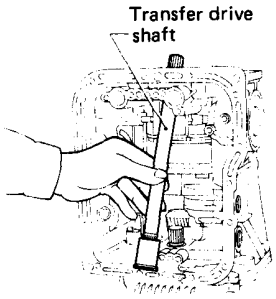

A13-479

Fig. 7-84 Removing the transfer drive shaft

8) Remove the band servo piston CP with Plier (398663600).

9) Remove the strut band.

10) Remove the brake band ASSY, reverse clutch ASSY and forward clutch ASSY.

11) Remove the connecting shell.

12) Remove the center support ASSY by using two 6 mm bolts.

13) Remove the planetary input gear and planetary input gear 2.

14) Remove the planetary gear ASSY and low & reverse brake plates.

15) Remove retaining plate 2.

16) Remove the planetary output gear.

NOTE:

Perform steps 17), 18) and 20) below, if needed.

17) Remove the selector arm.

18) Remove the manual plate and parking rod.

19) Remove the transmission case.

a. Wrap a vinyl tape around the rear splines of the drive pinion to prevent damage to the oil seal.

b. Remove the nuts securing the transmission case to the final & reduction case, and separate the transmission case from the final & reduction case by lightly tapping the periphery of the former case with a plastic hammer.

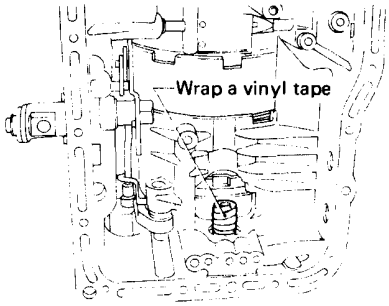

A13-480

Fig. 7-85 Removing the transmission case

20) Remove the parking pawl, parking pawl shaft and parking shaft support plate.

2) Inspection

1) Transmission case and transmission cover (intermediate case).

a. Replace transmission case and/or transmission cover (intermediate case) if cracks, damage, etc. are noticed.

b. Repair if the mounting surface is dented or gouged.

c. Check the drive pinion oil seal (21x33x6.5) and oil seal breather for scratches at the passage location and, if necessary, replace.

To remove the oil seal, always use Oil Seal Puller (398308700) and drive the oil seal out as shown in the figure.

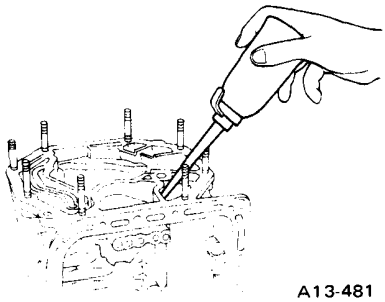

A13-481

Fig. 7-86 Checking the passage in the air breather

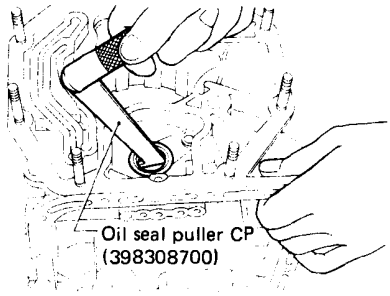

A13-482

Fig. 7-87 Correct direction of the oil seal

When installing the oil seal, use Drive Pinion Oil Seal Installer (499247000).

NOTE:

a. Pay attention to the direction of the oil seal.

b. Before installing the oil seal, apply a coat of oil to its periphery.

c. Tilting of the oil seal should be kept to a minimum.

Tool No.	Tool Name
398308700	Oil seal puller
499247000	Drive pinion oil seal installer

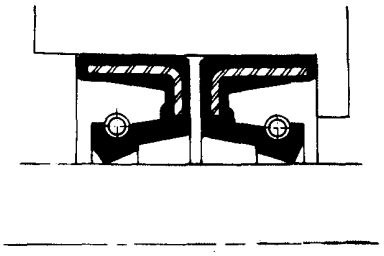

A13-483

Fig. 7-88 Removing the oil seal

Downloaded from www.Manualslib.com manuals search engine

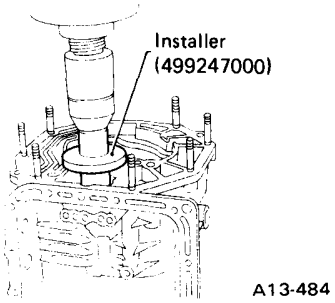

Fig. 7-89 Installing the oil seal

2) Low & reverse brake and brake band.
If facing is excessively worn or otherwise damaged, replace the brake and/or brake band.
3) Gaskets, "O" rings and seal rings.
a. Install new gaskets during each ASSY.
b. If the "O" ring and seal ring are folded, cracked or otherwise damaged, replace.
c. Check for tightness of the two straight pins (8x18) driven into the transmission case used for alignment with the differential. If found loose, remove the two using a wooden or plastic hammer and install new ones.

NOTE:
Before installing the straight pins, apply a coat of Lock Tite to their mating surfaces and drive them into the transmission case 9 mm (0.35 in).

3) Assembly

To assemble, reverse the order of disassembly.
1) Installation of parking pawl and parking pawl shaft
Install parking rod support plate, parking pawl return spring and parking pawl to case in that order and retain with clip after inserting parking pawl shaft from the front side.
2) Installation of parking rod and parking lever
Connect parking rod and parking lever and retain with clip.
After hanging parking rod on the notched portion of parking shaft support plate with its cam portion positioned at the back of parking pawl, install parking lever to parking lever pin and retain with clip.

3) Connect the transmission case and final reduction case.
Install Drive Pinion Oil Seal Guide 499257100 onto the splines of the drive pinion rear end and secure the transmission case to the final reduction case with the eight 8 mm nuts.

Tightening torque	25 N·m (2.5 kg-m, 18 ft-lb)

NOTE:
a. Be careful not to damage the sealing lip of the oil seal.
b. Apply a thin coat of ATF to the guide in advance.

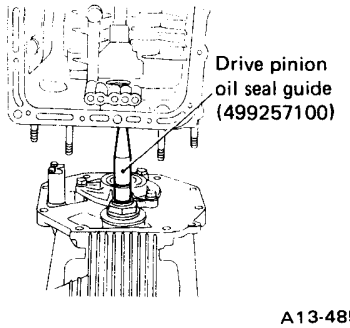

Fig. 7-90 Connecting the transmission and final reduction cases

4) Checking the operation of one-way clutch
Make certain that the clutch turns clockwise only, as viewed from the front side with the planetary carrier ASSY assembled to the center support.
5) Installation of the planetary gear ASSY
6) Selection of retaining plate 2
This is for determining the proper retaining plate 2 so that the clearance between piston 2 and driven plate is within specifications. Putting the component parts on Base (499687000) as shown in the figure, select a proper retaining plate 2 so that "H" is within specifications.

H = 73.45 – 74.05 mm (2.8917 – 2.9153 in)

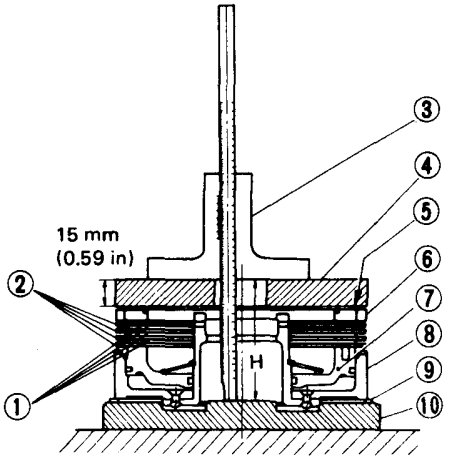

1	Driven plate	6	Retaining plate 2
2	Drive plate	7	Piston 2
3	Depth gauge	8	Center support
4	Gauge (398643600)	9	Snap ring
5	Snap ring	10	Base (499687000)

Fig. 7-91

Retaining plate 2	
Part No.	Thickness mm (in)
444267001	7.2 (0.283)
444267002	7.4 (0.291)
444267003	7.6 (0.299)
444267004	7.8 (0.307)
444267005	8.0 (0.315)
444267006	8.2 (0.323)
444267007	7.0 (0.276)
444267008	6.8 (0.268)

7) Installation of low & reverse brake parts
Install snap ring, retaining plate 2, drive plates, driven plates, center support ASSY and snap ring into case in that order.

Quantity of drive plates 4
Quantity of driven plates 4

NOTE:
a. When installing the center support, screw the 6 mm bolts in the center support, and then install it into the transmission case while turning the center support gradually.

Downloaded from www.Manualslib.com manuals search engine

b. The center support is engaged with the transmission case by splines at one position. When installing the center support, be careful not to damage the one way clutch and bushing by the end of the center support.

c. Install the snap ring (134 mm) with its open ends positioned sideward or upward.

d. If difficulty is encountered in installing the center support, loosen the bolt that fixes the transmission case to stand.

8) Measuring the clearance between piston 2 and driven plate

After assembly, measure the clearance between piston 2 and driven plate. The clearance should be within the specifications.

Low & reverse brake clearance	0.50 – 1.20 mm (0.0197 – 0.0472 in)

9) Checking the operation of low & reverse brake

Apply air into the oil hole in low & reverse brake to see that the piston moves properly.

10) Installation of connecting shell and clutch hub

Install connecting shell and clutch hub as an ASSY to the spline of reverse sun gear and forward sun gear.

11) Installation of forward clutch ASSY and reverse clutch ASSY

Install forward clutch ASSY and reverse clutch ASSY in that order.

Make certain that the thickness of washer which is installed between forward clutch ASSY and clutch hub is 1.2 mm (0.047 in).

12) Installation of brake band

Match the projected portions of the brake band with the knotches in the transmission case to install the brake band.

NOTE:

When handling the brake band, be careful not to open its open end too much.

Too much opening causes separation and damage of the facing.

13) Measure the total end play in the axial direction. Determine the thickness of the washer (21x31.2xt) to be used at the oil pump carrier end. The total end play should be within specifications.

Total end play	0.25 – 0.5 mm (0.0098 – 0.020 in)

a. Measure dimension "L", as shown, using Depth Gauge 498147001 and Low & Reverse Brake Gauge 398643600.

NOTE:

When measuring dimension "L", ensure that the thrust bearing (20x35x2.8) is not installed.

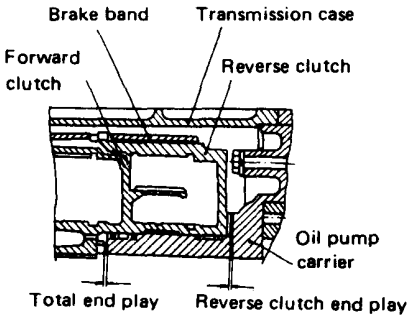

Fig. 7-92 Measuring position of end plays

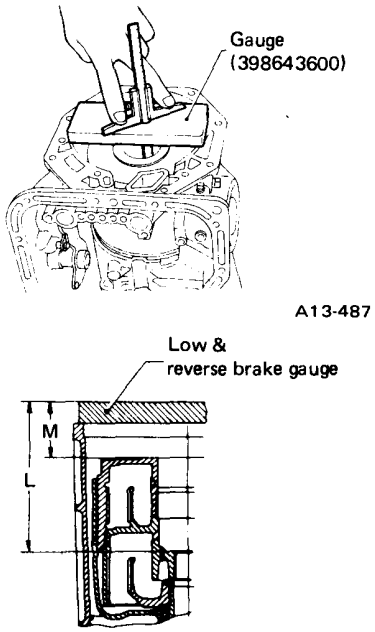

Fig. 7-93 Measuring dimensions "L" and "M"

b. Using the same tools as those in a. above, measure dimension "ℓ". The thrust bearing (20x35x2.8) should be installed.

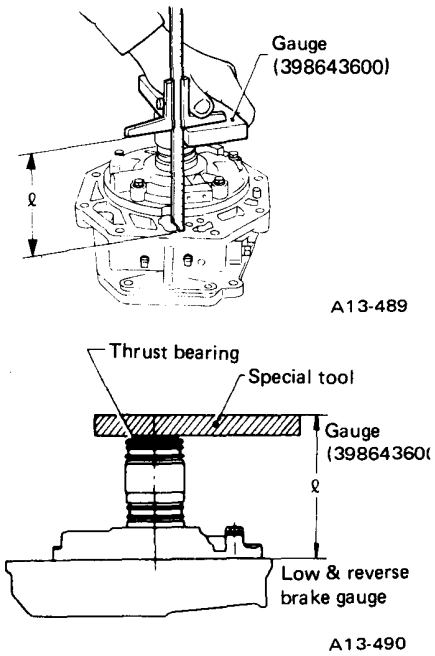

Fig. 7-94 Measuring end play "ℓ"

c. Determine thickness T of the thrust race by the following equation and select the suitable washer (21x31.2xt) from those listed in table on the right.

$$T = (L + 0.4) - (0.25 \text{ to } 0.50) - \ell$$

Part No.	Thickness [mm (in)]
803021048	1.0 (0.039)
803021049	1.2 (0.047)
803021040	1.4 (0.055)
803021044	1.6 (0.063)
803021045	1.8 (0.071)
803021046	2.0 (0.079)
803021047	2.2 (0.087)

14) Measure the end play of the reverse clutch drum.

Select a suitable thrust front clutch washer so that the end play between the reverse clutch drum and oil pump carrier is within specifications.

Reverse clutch end play	0.5 – 0.8 mm (0.020 – 0.031 in)

a. Measure dimension "M", as shown, using Depth Gauge 498147001 and Low & Reverse Brake Gauge 398643600.

Downloaded from www.Manualslib.com manuals search engine

b. Using the same tools as in a. above, measure dimension "m".

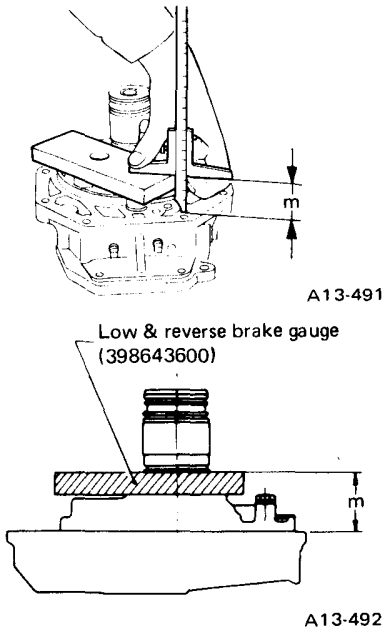

Fig. 7-95 Measuring end play "m"

c. Thickness t of the thrust front clutch washer to be used can be determined by the following equation.

t = (M + 0.4) - (0.5 to 0.8) - m

Select a suitable washer from those listed in the table on the right.

15) Installing the transfer drive shaft.
Secure the transfer coupling to the transfer drive shaft with the spring pin and engage the shaft with the drive pinion at the splines.

NOTE:
Always use a new spring pin.

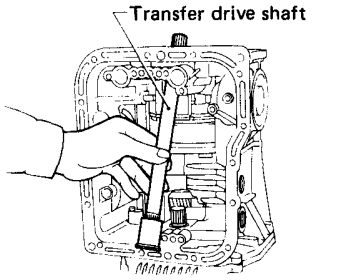

Fig. 7-96 Installing the transfer drive shaft

16) Assembling the oil pump ASSY.
Assemble the thrust bearing (20x35x2.8) to the forward clutch. Apply vaseline to the washers which have been selected in steps 13) and 14) and affix them to the oil pump carrier. Install the oil pump ASSY, being careful not to drop the washers. Before installing the oil pump ASSY, ensure that the mating surfaces of transmission cover (intermediate) and transmission case gaskets are clean from oil.

Tightening torque of case mounting bolts	23 – 26 N·m (2.3 – 2.7 kg-m, 17 – 20 ft-lb)

17) Assembling the band servo piston and servo piston cover.
With the band servo piston assembled to the servo piston cover, insert the transmission case into place, using the piston rod as a guide, and attach the servo piston cover with the inner snap ring.

NOTE:
a. Be careful not to damage the "O" ring located at the periphery of the servo piston cover.
b. Be sure to install the servo return spring on the piston in advance, paying attention to its orientation.

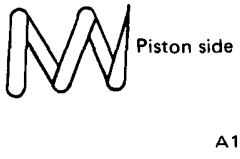

Fig. 7-97 Servo return spring

18) Adjusting the brake band ASSY.
Install the brake band strut correctly. Tighten the brake band adjusting screw to a torque of 9 N·m (0.9 kg-m, 6.5 ft-lb) and back-off the screw two rotations. Then tighten the lock nut (10x8) to 26±2 N·m (2.7±0.2 kg-m, 20±1.4 ft-lb).

NOTE:
Do not tighten both the adjusting screw and lock nut to more than their specified torque settings.

19) Installation of manual plate
Adjust the clearance between manual plate and spacer by shim(s) until it is within 0.3 mm (0.012 in), and install manual plate.
Tighten nut to the specified torque.

Torque	34 – 44 N·m (3.5 – 4.5 kg-m, 25 – 33 ft-lb)

20) Installation of control valve ASSY
Adjust the groove ① to the manual plate pin ②, and install to transmission case.

Torque (Valve body attaching bolt)	6 – 8 N·m (0.6 – 0.8 kg-m, 4.3 – 5.8 ft-lb)

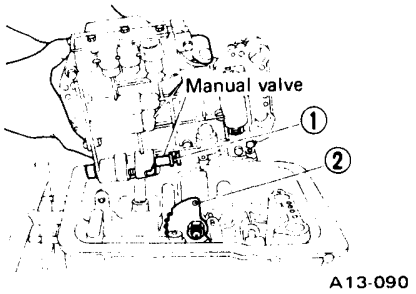

Fig. 7-98 Installing control valve ASSY

21) Assemble the vacuum diaphragm ASSY.
a. Attach the Rod Diaphragm Gauge Set to the transmission case and screw it in until it butts up against the throttle valve.
b. Read the scale of the Rod Diaphragm Gauge where it aligns with the end face of the holder, and select a suitable diaphragm rod from those listed in the following table.

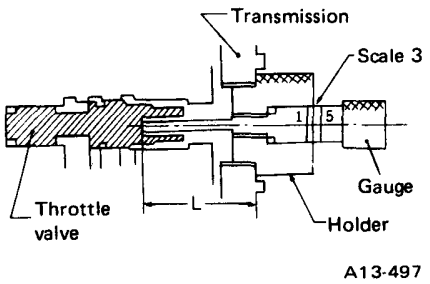

Fig. 7-99 Construction of the gauge set

Downloaded from www.ManualsHub.com manuals search engine

Gauge Indication	Part No.	Diaphragm rod length mm (in)	Dimension "L" (Measured) mm (in)
1	493210110	34 (1.34)	Below 30.5 (1.201)
Between 1 and 3	493210111	34.5 (1.358)	30.65 – 31.05 (1.2067 – 1.2224)
3	493210112	35 (1.38)	31.15 – 31.55 (1.2264 – 1.2421)
Between 3 and 5	493210113	35.5 (1.398)	31.65 – 32.05 (1.2461 – 1.2618)
5	493210114	36 (1.42)	Above 32.05 (1.2618)

Install the vacuum diaphragm together with the selected rod.

NOTE:
Do not forget to install the "O" ring.

22) Assembling the downshift solenoid ASSY.
Install the downshift solenoid ASSY in the bore on the front side of the transmission case turning it by hand.

NOTE:
Do not forget to install the "O" ring.

23) Assembling the servo apply pipe and servo release pipe.
Lightly drive the pipes into their proper positions. Ensure that the pipes' height (at points where the pipes are supported by the oil pan) does not exceed 41 mm (1.61 in) as measured from the mating surface of the converter oil pan.

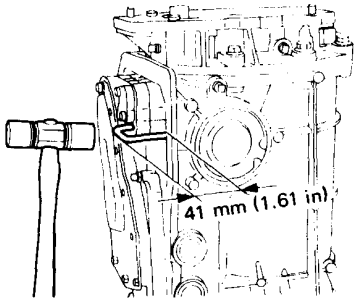

A13-498

Fig. 7-100 Installing the servo apply pipe

NOTE:
a. Be careful not to deform or bend the pipe.
b. Install new pipes at each assembly.

24) Installing the converter oil pan.
Before installing the oil pan, be sure to clean the oil from the mating surface of the oil pan and gasket.

NOTE:
Install a new gasket at each assembly.

Tightening torque of converter oil pan	3.4 – 4.4 N·m (0.35 – 0.45 kg-m, 2.5 – 3.3 ft-lb)

6 TRANSMISSION COMPONENTS

The transmission section contains many small parts which are similar in configuration and are machined accurately. Before assembling and/or installing these parts, place them in neat order so that they may be assembled properly to their proper positions. Be sure to check the operation of parts.

1) Reverse Clutch

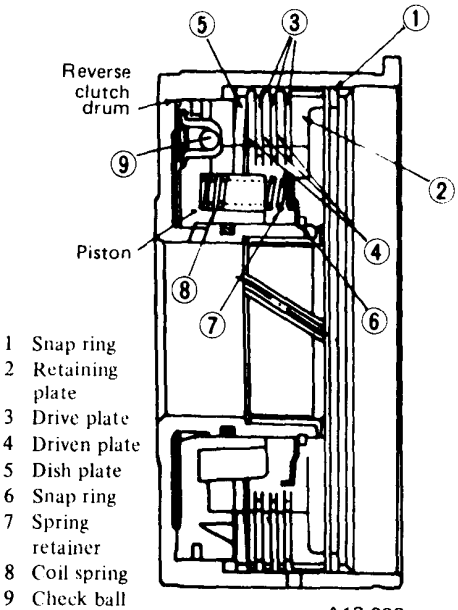

A13-093

Fig. 7-101 Sectional view of reverse clutch

1) Disassembly
Pry off the snap ring ① with a screwdriver, and remove the retaining plate ②, drive plates ③, driven plates ④, and dish plate ⑤. Using Clutch Spring Compressor (398673600) and Pliers (399893600), pry off the snap ring ⑥ from the coil spring retainer ⑦.
Remove the coil spring retainer ⑦ and coil springs ⑧. Apply air into the oil hole to remove the piston.

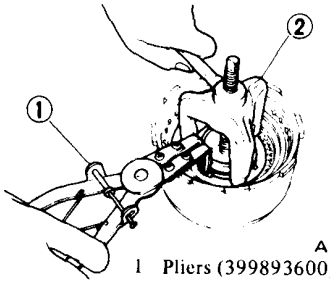

A13-094
1 Pliers (399893600)
2 Compressor (398673600)

Fig. 7-102 Removing snap ring

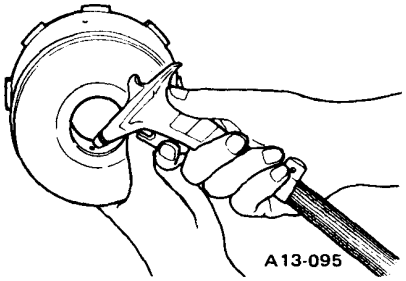

A13-095

Fig. 7-103 Blowing out piston

Downloaded from www.Manualslib.com manuals search engine

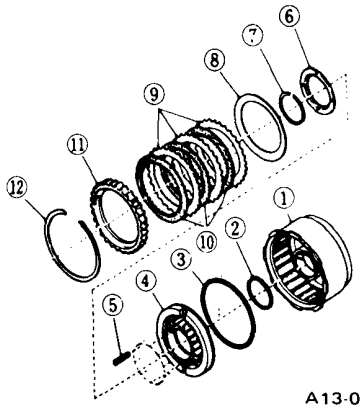

① Reverse clutch drum
② O-ring
③ Lathe cut seal ring
④ Reverse clutch piston
⑤ Return spring
⑥ Spring retainer
⑦ Snap ring
⑧ Dish plate
⑨ Driven plate
⑩ Drive plate
⑪ Retaining plate
⑫ Snap ring

Fig. 7-104 Reverse clutch components

2) Inspection

a. Replace the clutch drive plate if the facing is worn or damaged.

b. Replace defective parts if snap ring is worn, return spring is fatigued or broken or spring retainer is deformed.

3) Assembly

To assemble, reverse the disassembling procedure, applying the ATF onto all the parts.

a. Install the driven plates to the clutch drum. Be sure to align the driven plate missing tooth portion with the oil hole in the clutch drum.

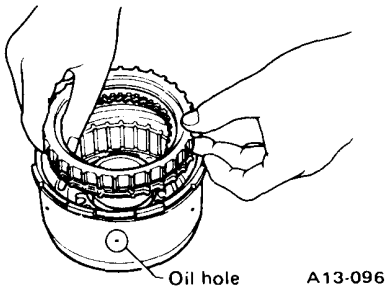

Fig. 7-105 Inserting clutch plates

b. Check the clearance between the snap ring ① and retaining plate ② to ensure that it is within the specifications. If it is not, change the retaining plate with a proper one.

Reverse clutch clearance	1.60 – 1.80 mm (0.0630 – 0.0709 in)

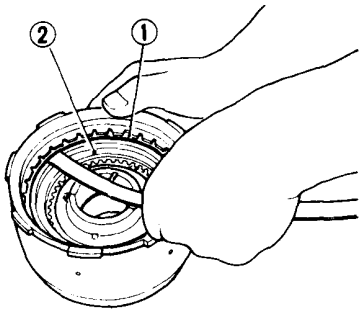

1 Snap ring
2 Retaining plate

Fig. 7-106 Measuring ring-to-plate clearance

NOTE:
Retaining plates are available in six different sized as follows:

Retaining plate	Part No.
10.6 mm (0.417 in)	453710100
10.8 mm (0.425 in)	453710101
11.0 mm (0.433 in)	453710102
11.2 mm (0.441 in)	453710103
11.4 mm (0.449 in)	453710104
11.6 mm (0.457 in)	453710105

c. Install the reverse clutch ASSY to the oil pump carrier. Apply air into the oil hole to see that the reverse clutch moves properly as shown in the figure.

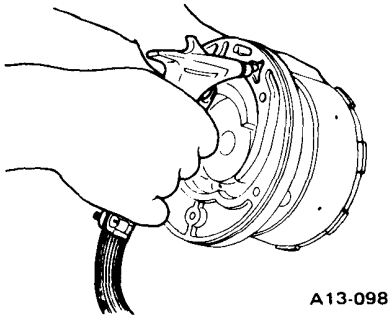

Fig. 7-107 Testing reverse clutch

2) Forward Clutch

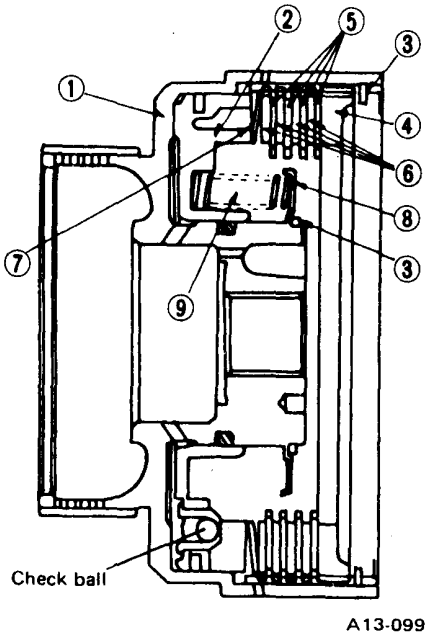

① Forward clutch drum
② Piston
③ Snap ring
④ Retaining plate
⑤ Drive plate
⑥ Driven plate
⑦ Dish plate
⑧ Coil spring retainer
⑨ Coil spring

Fig. 7-108 Sectional view of forward clutch

1) Disassembly

a. Using the same disassembling procedure as that for the reverse clutch, remove the snap ring ③, retaining plate ④, drive plates ⑤, driven plates ⑥ and dish plate ⑦. Remove the snap ring from the coil spring retainer ⑧.

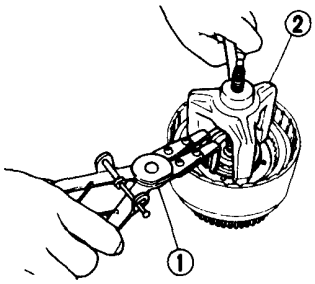

1 Pliers (39989600)
2 Compressor (398673600)

Fig. 7-109 Removing snap ring

b. Drive the piston out by applying air into the oil hole.

Downloaded from www.Manualslib.com manuals search engine

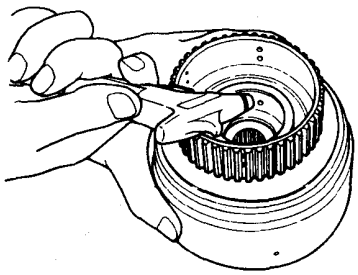

A13-101

Fig. 7-110, Blowing out piston

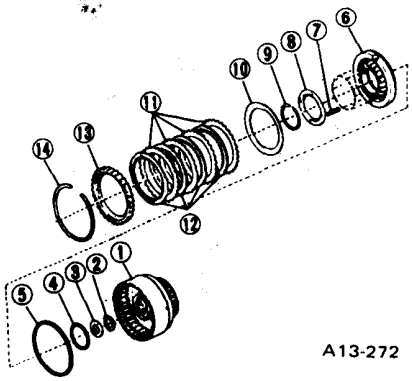

A13-272

① Forward clutch drum
② Washer
③ Thrust bearing
④ O-ring
⑤ Lathe cut seal ring
⑥ Forward clutch piston
⑦ Return spring
⑧ Spring retainer
⑨ Snap ring
⑩ Dished plate
⑪ Driven plate
⑫ Drive plate
⑬ Retaining plate
⑭ Snap ring

Fig. 7-111 Forward clutch components

2) Inspection

Refer to the topic under the reverse clutch previously described.

3) Assembly

To assemble forward clutch, reverse the order of disassembly.

Be sure to apply the ATF to all parts when assembling.

a. After assembly, check the clearance between the snap ring ① and retaining plate ② to see that it is within the specifications.

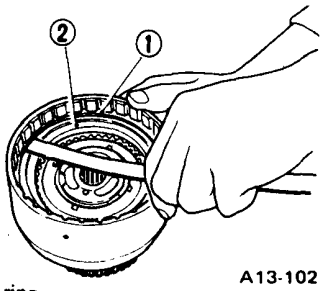

A13-102

1 Snap ring
2 Retaining plate

Fig. 7-112 Measuring ring-to-plate clearance

Forward clutch clearance	1.00 – 1.50 mm (0.0394 – 0.0591 in)

b. Install the forward and reverse clutch assemblies to the oil pump carrier. Apply air into the oil hole to see that the forward clutch moves properly.

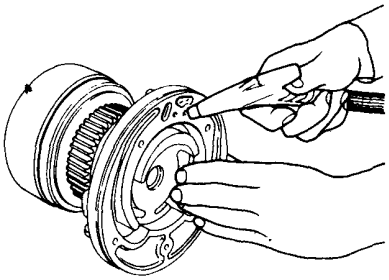

A13-103

Fig. 7-113 Testing forward clutch

3) Center Support Assembly

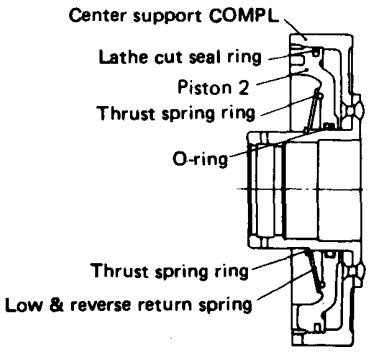

A13-104

Fig. 7-114 Cross-section view of center support

1) Disassembly

a. Use the following tools to remove the snap ring from the center support.

Seat	(398623600)
Compressor	(398673600)
Pliers	(399893600)

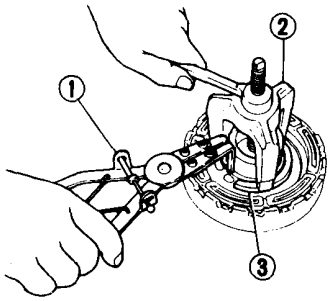

A13-105

1 Pliers (399893600)
2 Compressor (398673600)
3 Seat (398623600)

Fig. 7-115 Removing snap ring

b. Remove clutch piston 2 by applying air into the oil hole in center support.

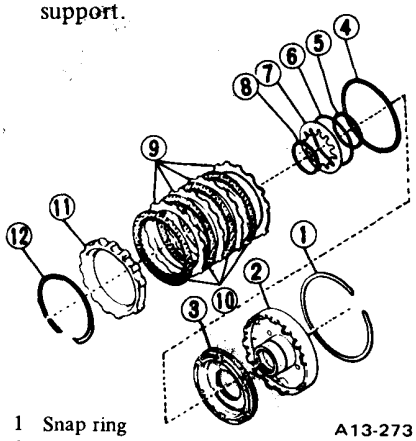

A13-273

1 Snap ring
2 Center support
3 Piston
4 Lathe cut seal ring
5 O-ring
6 Thrust spring ring
7 Low & Reverse return spring
8 Snap ring
9 Driven plate
10 Drive plate
11 Retaining plate
12 Snap ring

Fig. 7-116 Low and reverse brake components

2) Inspection

a. Replace low & reverse return spring if it is fatigued.

b. Check seal ring and O-ring for damage. If necessary, replace.

c. Replace other parts which are worn or damaged.

Downloaded from www.Manualslib.com manuals search engine

3) Assembly
To assemble the center support ASSY, reverse the order of disassembly.
Be sure to apply the ATF onto all parts when assembling.

NOTE:
For center support ASSY, use the same tools as those used during disassembly, and be careful not to damage the seal ring during assembly.

4) Oil Pump Assembly

1) Disassembly
Remove the bolts and disassemble the oil pump carrier and transmission cover (intermediate case).
Remove the inner and outer gears from the oil pump carrier.

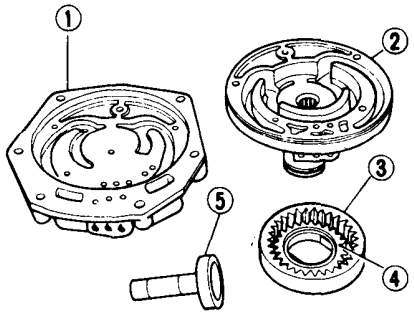

A13-109

1 Transmission cover
2 Oil pump carrier
3 Outer gear
4 Inner gear
5 Oil pump drive shaft II

Fig. 7-117 Oil pump components

NOTE:
When disassembling the oil pump, note the positions of the side faces of inner gear and outer gear so that they may be installed with their side faces facing the same way.

2) Inspection
a. Check the inner and outer gear tooth faces for damage or wear. If necessary, replace.
Replace the O-ring and seal rings if they are damaged.

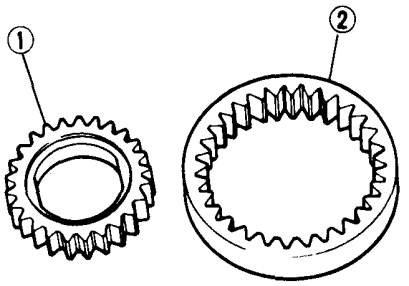

1 Inner gear
2 Outer gear

A13-110

Fig. 7-118

b. Check the bushing and two needle roller bearings (15 x 21 x 12 mm) located in the oil pump carrier. If they are damaged, replace.
c. Replace oil pump carrier and/or transmission cover if the contacting surface with inner gear or outer gear is damaged.
d. Replace oil pump shaft 2 if the shaft portion or contacting surface with inner gear is damaged.
3) Removal and installation of needle bearing and bushing
a. Removal of needle bearing and bushing
Set up the oil pump carrier as shown in the figure, and drive out the bushing and two roller bearings at one time with Needle Bearing Remover 2 (399903600).

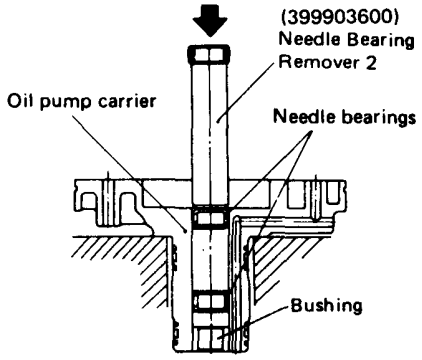

A13-111

Fig. 7-119 Removing bushing and needle roller bearings

b. Installation of needle bearing and bushing
(i) When installing the middle needle roller bearing, use Installer (399543600) and Installer 2 (398863600) as shown in the figure.

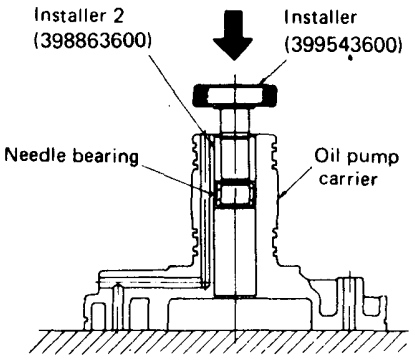

A13-112

Fig. 7-120 Installing needle bearing

(ii) When installing the bushing and remaining needle roller bearing, use Installer (399543600), as shown in the figure.

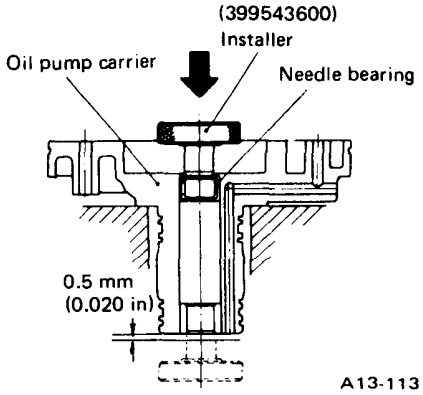

A13-113

Fig. 7-121 Installing needle roller bearing and bushing

4) Measurement of clearances
To check clearances, use Gauge (398643600) and Thickness Gauge (499667000).
a. Clearance between inner/outer gear and transmission cover (intermediate case).

Standard clearance	0.02 – 0.04 mm (0.0008 – 0.0016 in)

Replace the gears as a set if the clearance exceeds 0.08 mm (0.0031 in).

Downloaded from www.Manualslib.com manuals search engine

Inner gear	434610100	434610101	434610102
Outer gear	434710100	434710101	434710102
Thickness mm (in)	16 – 15.99 (0.6299 – 0.6295)	15.99 – 15.98 (0.6295 – 0.6291)	15.98 – 15.97 (0.6291 – 0.6287)

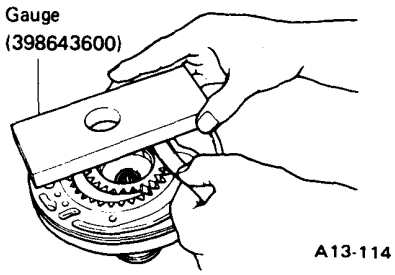

Fig. 7-122 Measuring clearance (1)

b. Clearance between cresent and tooth tip of outer gear.

Standard clearance	0.14 – 0.21 mm (0.0055 – 0.0083 in)

Replace the gears as a set if the clearance exceeds 0.25 mm (0.0098 in).

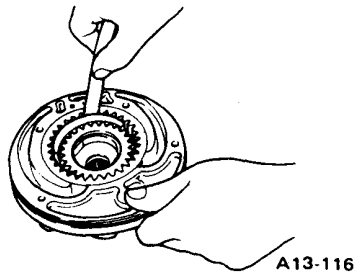

Fig. 7-123 Measuring clearance (2)

c. Radial clearance between outer gear and oil pump carrier.

Standard clearance	0.05 – 0.20 mm (0.0020 – 0.0079 in)

If the clearance exceeds 0.25 mm (0.0098 in), replace the gears as a set.

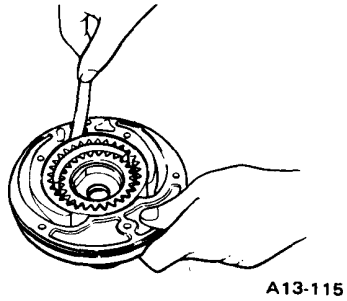

Fig. 7-124 Measuring clearance (3)

d. Clearance between seal ring and groove.

Standard clearance	0.04 – 0.16 mm (0.0016 – 0.0063 in)

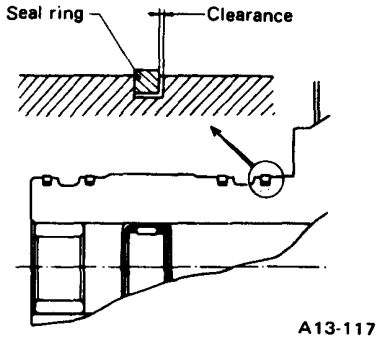

Fig. 7-125 Measuring clearance (4)

5) Assembly

a. Place the oil pump carrier as shown in the figure, set the inner and outer gears properly, and insert the oil pump drive shaft II into the oil pump carrier.

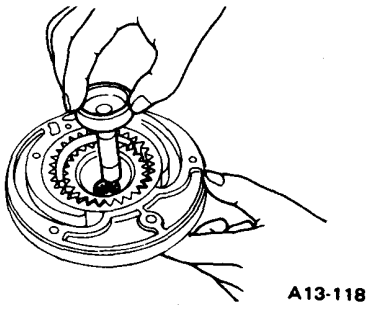

Fig. 7-126 Assembling oil pump (1)

NOTE:

a. When installing the inner and outer gears, be sure that the faces of the gears face as before disassembly.

b. Apply the ATF to the side faces of the gears.

b. Apply the ATF to the O-ring located on the periphery of the oil pump carrier.
When installing the transmission cover, be sure to align the bolt holes. Then, tighten the cover with the bolts.

Torque	6 – 8 N·m (0.6 – 0.8 kg-m, 4.3 – 5.8 ft-lb)

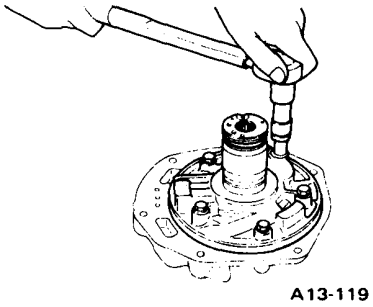

Fig. 7-127 Assembling oil pump (2)

NOTE:

a. When inserting the oil pump carrier into the cover, press gradually so as not to damage the O-ring.

b. After installing the oil pump to the transmission case, fit the oil pump drive shaft to the oil pump drive shaft II and then check that the oil pump gears can easily be rotated with hand.

c. When assembling the intermediate case and oil pump carrier, pay attention to the assembling direction of the O-ring.

Downloaded from www.Manualslib.com manuals search engine

5) Planetary Gear

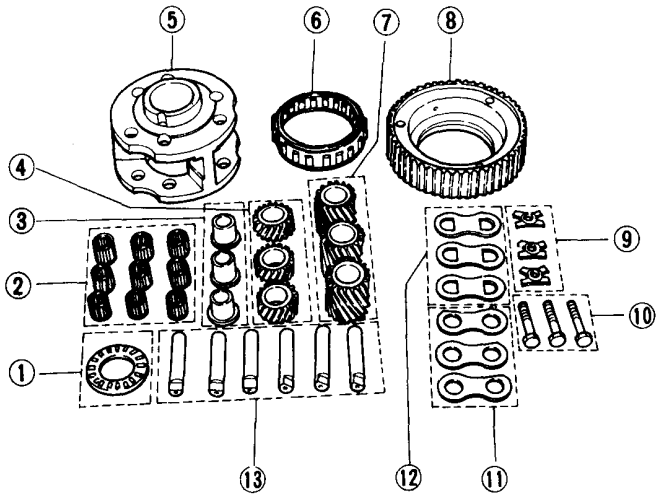

A13-307

1 Thrust bearing
2 Needle bearing
3 Spacer
4 Short pinion
5 Planetary carrier
6 One-way clutch
7 Long pinion
8 Outer race
9 Lock plate
10 Bolt
11 Thrust washer II (Rear)
12 Thrust washer (Front)
13 Planetary pinion pin

Fig. 7-128 Component parts of planetary gear

1) Disassembly

Remove the bolts securing the one-way clutch outer race to the planetary carrier.

Push the pinion pin out toward the one-way clutch side, and detach the short pinions, long pinions, thrust washers, thrust washer IIs, needle roller bearings, spacers, and thrust bearing.

Remove the one-way clutch from the outer race.

2) Inspection

Check gear faces for damage.

Check the needle bearings and thrust washers for damage. If necessary, replace.

Check the one-way clutch sprag for wear or damage. If necessary, replace.

Check the bushing at the one-way clutch outer race for wear or damage. If necessary, replace.

Check the planetary carrier-to-thrust washer clearance to see that it is within the specifications.

Standard clearance	0.15 – 0.60 mm (0.0059 – 0.0236 in)

If the clearance exceeds 0.70 mm (0.0276 in), replace.

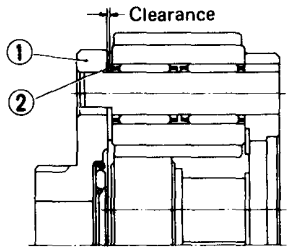

1 Carrier
2 Thrust washer 2.

A13-308

Fig. 7-129 Measuring clearance

3) Assembly

a. Install thrust bearing to planetary carrier.

b. To assemble the planetary gear, reverse the order of disassembly. Pay particular attention to see that the installed parts face properly.

c. When installing the one-way clutch on the outer race, push the T bar with finger to insert the one-way clutch until a snap is felt on the finger. Secure the one-way clutch retainer in the outer race.

Torque	14 – 16 N·m (1.4 – 1.6 kg-m, 10 – 12 ft-lb)

6) Control Valve Assembly

The control valve is composed of parts which are accurately machined to a high degree and should be handled carefully during disassembly and assembly. As these parts are similar in shape, they should be arranged in neat order on a table after disassembly so that they can be easily installed to their original positions. Spring-loaded parts should be also handled carefully, as springs may jump out of place when the parts are disassembled or removed. Extreme care should be taken so as not to drop valves on the floor. Before assembling, the parts and valves should be dipped in a container filled with the ATF.

Make sure that the valves are clean and free from any foreign material before assembly. Torque specifications should also be observed.

NOTE:

If clutch seizure, brake band burning, or oil contamination is encountered, disassemble the control valve ASSY for inspection. When reassembling, flush all parts.

1) Disassembly

a. Oil strainer

Remove the bolts and nut securing the oil strainer, and detach the oil strainer. The nut is marked "⬇" and the bolt is marked (⬇) in the figure.

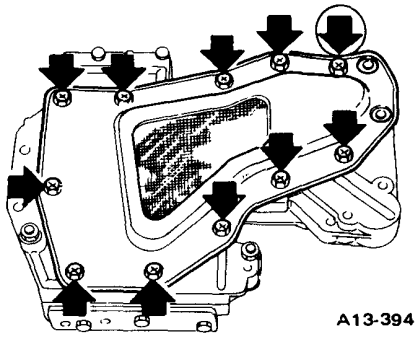

A13-394

Fig. 7-130 Removal of oil strainer

NOTE:

Do not use a cross-head screwdriver.

b. Valve bodies and plate

Remove the bolts, and separate the lower valve body, plate and upper valve body.

Downloaded from www.Manualslib.com manuals search engine

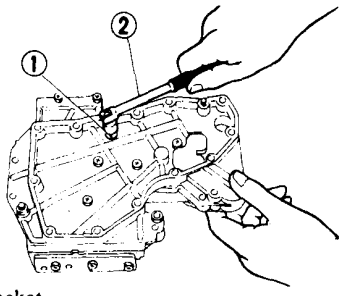

1 Socket
2 Spinner handle

A13-125

Fig. 7-131 Removal of lower valve body

When removing the plate, be careful not to lose the following parts located in the lower valve body: Orifice check valve, spring, throttle relief spring and steel ball.

c. Manual valve

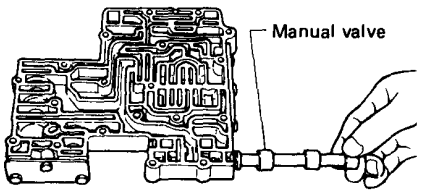

A13-127

Fig. 7-132 Removal of manual valve

d. 1-2 shift and 2-3 shift valves and pressure modifier valve.

NOTE:
Do not use a cross-head screwdriver.

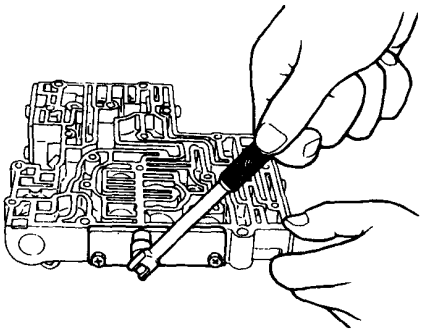

A13-128

Fig. 7-133 Removal of side plate

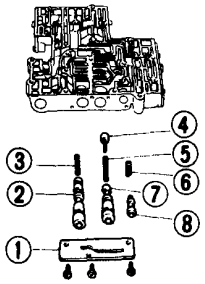

A13-129

1 Side plate
2 1-2 shift valve
3 1-2 shift spring
4 2-3 shift plug
5 2-3 shift spring
6 Pressure modifier spring
7 2-3 shift valve
8 Pressure modifier valve

Fig. 7-134 Exploded view of shift and modifier valves

e. Pressure regulating valve and second lock valve.

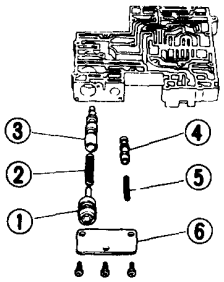

A13-130

1 Pressure regulating sleeve (including plug and spring seat)
2 Pressure regulating spring
3 Pressure regulating valve
4 Second lock valve
5 Second lock spring
6 Side plate

Fig. 7-135 Exploded view of pressure regulating and second lock valves

f. Solenoid downshaft valve, throttle back-up valve and vacuum throttle valve.

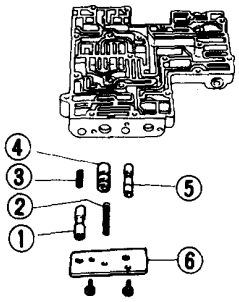

A13-367

1 Solenoid downshift valve
2 Throttle back-up spring
3 Solenoid downshift spring
4 Throttle back-up valve
5 Vacuum throttle valve
6 Side plate

Fig. 7-136 Exploded view of solenoid downshift, throttle back-up and vacuum throttle valves

2) Inspection

Replace the control valve ASSY as a set if excessive defect is found in the following parts.

- Seized valves
- Fatigued valve spring or check valve
- Damaged oil strainer
- Leaky plate
- Valve body with damaged oil passages
- Valve body with damaged threads

Description of springs in valves.

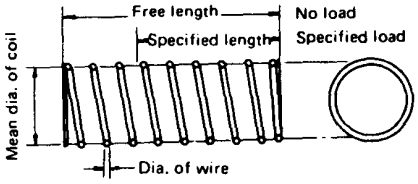

A13-132

Fig. 7-137 Spring

Downloaded from www.Manualslib.com manuals search engine

Specifications of springs in control valve ASSY						
Spring name	Wire Dia. mm (in)	Mean Dia. of coil mm (in)	Effective turn	Free length mm (in)	When installed	
					Specified length mm (in)	Specified load N (kg, lb)
Detent manual	1.3 (0.051)	6.0 (0.236)	15.0	32.4 (1.276)	26.5 (1.043)	53.9 (5.5, 12.1)
Pressure regulating	1.2 (0.047)	10.5 (0.413)	13.0	43.0 (1.693)	23.5 (0.925)	27.5 (2.8, 6.2)
Pressure modifier	0.4 (0.016)	8.0 (0.315)	5.0	18.5 (0.728)	9.0 (0.354)	1.0 (0.1, 0.2)
1-2 shift	0.6 (0.024)	6.0 (0.236)	16.0	32.0 (1.260)	16.0 (0.630)	6.129 (0.625, 1.378)
2-3 shift	0.7 (0.028)	6.2 (0.244)	18.0	41.0 (1.614)	17.0 (0.669)	13.73 (1.40, 3.09)
Throttle back-up	0.8 (0.031)	6.5 (0.256)	14.0	36.0 (1.417)	18.8 (0.740)	18.83 (1.92, 4.23)
Solenoid downshift	0.55 (0.022)	5.0 (0.197)	12.0	22.0 (0.866)	12.5 (0.492)	5.88 (0.60, 1.32)
Second lock	0.55 (0.022)	5.0 (0.197)	16.0	33.5 (1.319)	21.0 (0.827)	5.88 (0.60, 1.32)
Throttle relief	0.9 (0.035)	5.6 (0.220)	14.0	26.8 (1.055)	19.0 (0.748)	21.48 (2.19, 4.83)
Orifice check	0.2 (0.008)	4.8 (0.189)	15.0	21.5 (0.846)	11.5 (0.453)	0.10 (0.01, 0.02)

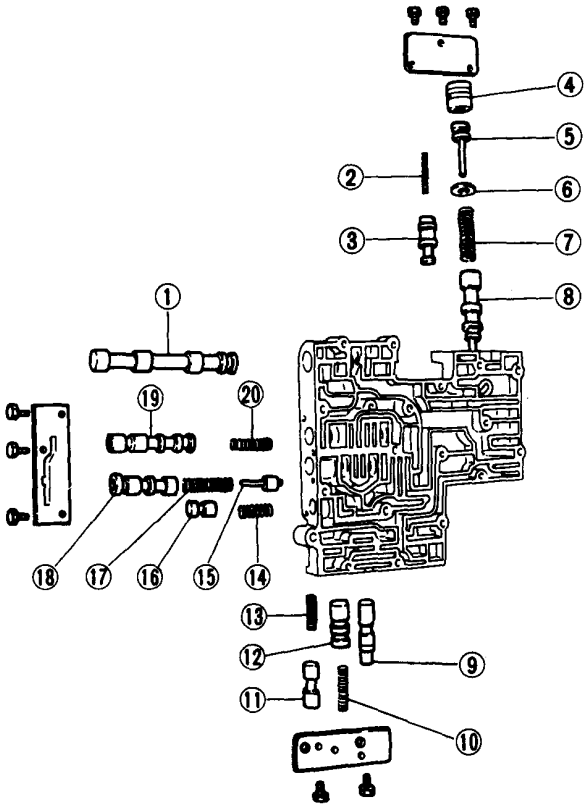

1 Manual valve
2 Second lock spring
3 Second lock valve
4 Pressure regulating sleeve
5 Pressure regulating plug
6 Spring seat
7 Pressure regulating spring
8 Pressure regulating valve
9 Vacuum throttle valve
10 Throttle back-up spring
11 Solenoid downshift valve
12 Throttle back-up valve
13 Solenoid downshift spring
14 Pressure modifier spring
15 2-3 Shift plug
16 Pressure modifier valve
17 2-3 Shift spring
18 2-3 Shift valve
19 1-2 Shift valve
20 1-2 Shift spring

A13-368

Fig. 7-138 General exploded view of control valve ASSY

Downloaded from www.Manualslib.com manuals search engine

3) Assembly

To assemble the control valve ASSY, reverse the order of disassembly. Observe the following instructions.

When assembling minor parts, such as valve springs, and valves, refer to the general exploded view and detailed description of valve springs, in figure before. Apply the ATF to all valves when installing.

When tightening parts, be sure to observe the specified torques.

Do not force valves into place, but lightly push them into place with hand.

a. Be sure to install the side plates:

Torque (Side plate attaching screw)	2.5 – 3.4 N·m (0.25 – 0.35 kg-m, 1.8 – 2.5 ft-lb)

b. Install the orifice check valves, spring, throttle relief spring and steel ball to the lower valve body.

NOTE:

Do not misplace the check valve and relief valve.

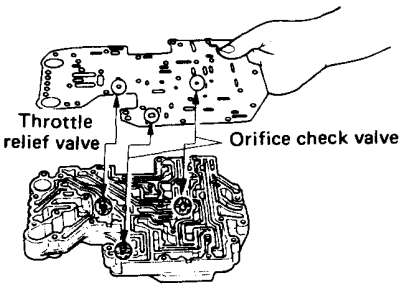

Fig. 7-139 Installation of orifice check and throttle relief valves

c. Assemble the upper and lower valve bodies.

NOTE:

Before tightening bolts to combine the upper and lower valve bodies, fix them in position by two reamer bolts at ⬇-marks in the figure.

Torque (Control valve bolt)	2.5 – 3.4 N·m (0.25 – 0.35 kg-m, 1.8 – 2.5 ft-lb)

Torque (Reamer bolt)	3.4 – 4.4 N·m (0.35 – 0.45 kg-m, 2.5 – 3.3 ft-lb)

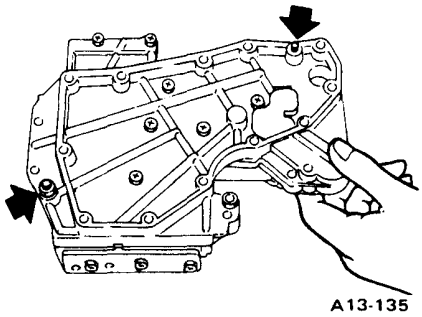

Fig. 7-140 Reamer bolts for positioning valve bodies

d. Install the oil strainer.

Torque (Oil strainer bolt)	3 – 4 N·m (0.3 – 0.4 kg-m, 2.2 – 2.9 ft-lb)

NOTE:

After completing assembly of control valve ASSY, wrap it in paper to prevent dust from accumulating on it.

7 FINAL REDUCTION CASE SECTION

1) Removal

1) Place the final reduction ASSY with gasket on Stand (499937000). Then secure them with the two appropriate bolts and nuts.

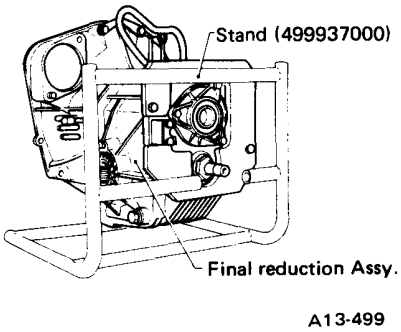

Fig. 7-141 Differential unit

2) Remove the 10 bolts combining the final reduction case and the converter housing. A small amount of oil will flow out when separating the cases. Place a container to receive the oil.

3) Remove the bolts securing the governor cover, and detach the governor body ASSY as shown in the figure.

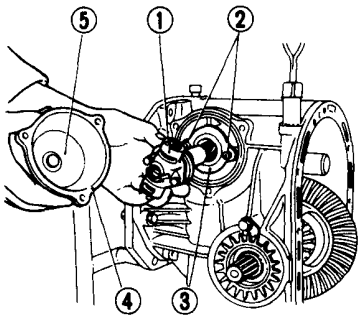

1 Governor body assembly
2 Bolts
3 Governor sleeve
4 Gasket
5 Governor cover

Fig. 7-142 Removal of governor valve assembly

NOTE:

When pulling out governor ASSY, turn it to the right slowly.

4) Parking actuator.

5) Remove the 3 bolts securing reduction gear oil seal holder.

6) Pry out the snap rings from the axle drive shafts in the differential case.

7) Remove the lock plates, and detach the axle shaft oil seal holders and the axle drive shafts as an ASSY.

NOTE:

Wrap vinyl tape over the shaft splines to avoid damaging the oil seal.

8) Move the differential ASSY to one side, and take it out of the final reduction case.

NOTE:

a. Do not confuse the right roller bearing (37 x 72 x 18.25 mm) with the left one.

b. Remove oil level gauge before removing differential ASSY.

9) Drive pinion.

a. Put Shaft (398653600) into the reduction drive gear, and engage it with Stopper (398781600) to securely lock the reduction drive gear.

b. Remove the drive pinion lock nut

Downloaded from www.Manualslib.com manuals search engine

with Socket Wrench (35 mm) (499987100).

NOTE:
The staking may be left as it is.

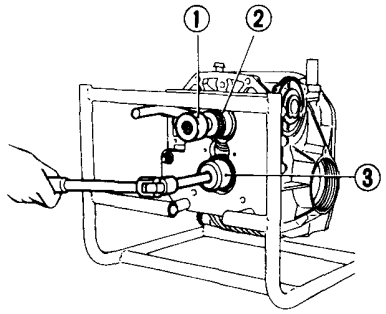

1 Stopper (398781600)
2 Shaft (398653600)
3 Socket Wrench (899984103)
A13-313

Fig. 7-143 Loosening drive pinion lock nut

c. Remove final reduction case from Stand, and press out drive pinion. Pay attention to the reduction drive gear end which protrudes from the mating surface.
d. Press out the reduction driven gear and bearing retainer as an ASSY from the transmission side by pressing the driven gear with an appropriate size of steel rod or pipe.
During this operation, pay attention to keep the reduction driven gear free from interfering with the case.
10) Speedometer driven gear.
a. Remove the snap ring from the end of the speedometer shaft, and detach the driven gear and steel ball.
b. Remove the snap ring from the speedometer shaft.
11) Reduction drive gear.
12) Stator shaft

2) Check

Wash all parts and carefully inspect them as follows:
1) Cases
Replace if cracked or damaged.
Repair if a mating surface is scored or seized.
Replace seized or cocked bushings.
2) Gaskets, oil seals, O-rings
Replace gaskets at every removal.
Replace O-rings if the sealing lips are folded, torn of deformed.
Replace oil seals if getting loose of spring, deformation of lip or any other abnormality are recognized.
3) Bearings
Check bearings for damaged roller face and abnormal wear.
If necessary, replace bearings as an ASSY.
Replace bearings which show abnormal color on the roller face.
4) Gears
If damage or abnormality are recognized on the tooth surface of hypoid gear, differential gear, reduction gear and governor gear, replace them with new ones.

NOTE:
Check the gears carefully, because worn tooth surface of abnormal tooth contact, which is difficult to find on external appearance, will become a cause of gear noise.

3) Installation

1) When final reduction components are disassembled, assemble them properly.
2) Press thrust bearing retainer with front bearing cup preset in it and reduction driven gear into final reduction case by using Installer (499427000) and Handle (498477000).

NOTE:
a. Be sure to align the projection of retainer flange with the groove of case.
b. Press the retainer until the end surface of retainer flange reaches that of case.

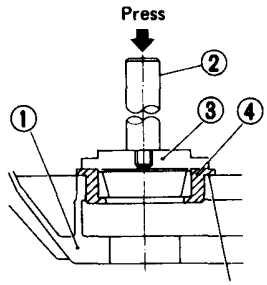

1 Final reduction case
2 Handle (498477000)
3 Installer (499427000)
4 Thrust bearing retainer
Contact this surface closely
A13-315

Fig. 7-144 Pressing retainer

3) Install the transmission case's front gasket and reduction drive gear on the final reduction case, and snugly tighten the 8 mm bolts at three places.

NOTE:
Do not forget to install the "O" ring on the periphery of the holder.

4) Using Reduction Bearing Installer (499247200), press the holder into the bore in the final reduction case.

NOTE:
Be careful not to damage the gasket.

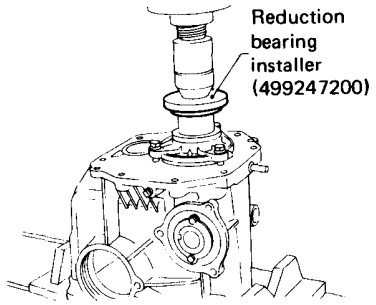

A13-500

Fig. 7-145 Installing the holder

5) Secure the final reduction case to the Differential Stand with two bolts [tightening torque: 10 N·m (1.0 kg-m, 7 ft-lb)] and tighten the three holder retaining bolts to the specified torque.

Tightening torque of holder	25 N·m (2.5 kg-m, 18 ft-lb)

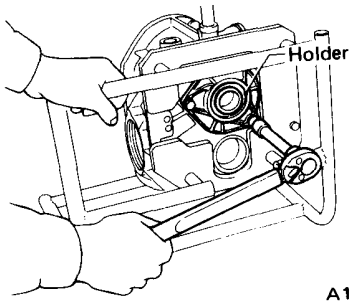

A13-501

Fig. 7-146 Tightening the holder

6) Install speedometer driven gear.
7) Make certain that the run-out at the tip of reduction drive gear shaft is within specifications by turning it with Shaft (398653600) and Handle (899924100).

Downloaded from www.Manualslib.com manuals search engine

Run-out (reduction drive gear shaft)	0 – 0.08 mm (0 – 0.0031 in)

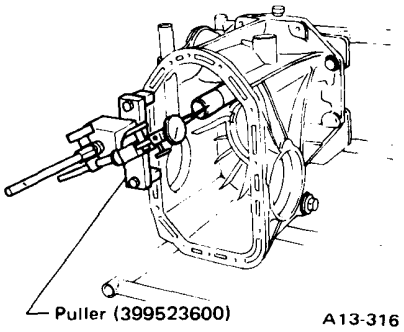

Fig. 7-147 Measuring of run-out

NOTE:
Use Puller (399523600) as an attachment.

8) Preload adjustment of drive pinion bearings

a. Install the front bearing cone, Spacer (399913604), and rear bearing cone in this order onto Master 2 (499917200) in final reduction case as shown in the figure. Using Socket Wrench (499987100) tighten Holder (399913603) with an open end wrench put inside the case to lock as shown in the figure.

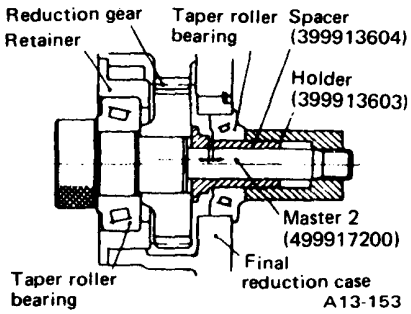

Fig. 7-148 Preload adjustment of drive pinion

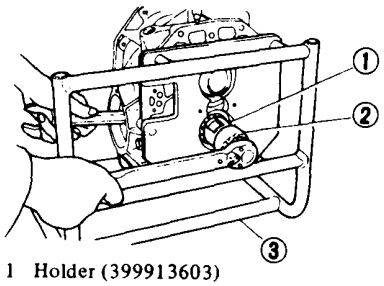

1 Holder (399913603)
2 Socket Wrench (899984103)
3 Stand (399933610)

Fig. 7-149 Tighten holder

b. Attach Pulley (498567000) on the hexagonal head of Holder, and tighten Holder so that the tension of the spring balance reads 29 to 39 N (3 to 4 kg, 7 to 9 lb) to give the specified preload.

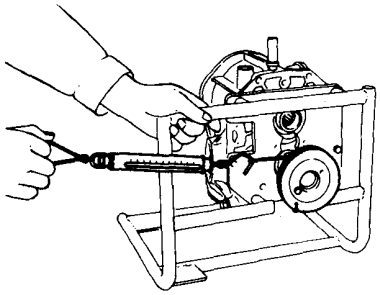

Fig. 7-150 Measurement of preload

NOTE:
a. Don't tighten Holder excessively.
b. The torque to give the specified preload is approximately 10 to 12 N·m (1.0 to 1.2 kg-m, 7 to 9 ft-lb).
c. The starting friction torque of the drive pinion is 1.23 to 1.62 N·m (12.5 to 16.5 kg-cm, 10.9 to 14.3 in-lb).

c. Measure the maximum clearance between Spacer and the rear bearing which is preloaded (that is, with the tool installed) by sliding Spacer in the axial direction to the extremes with the help of Magnet Base (498247001) attached Dial Gauge (498247100) as shown in the figure.

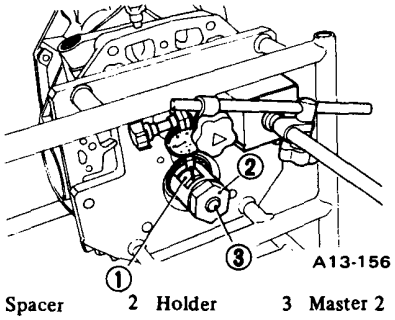

1 Spacer (399913604) 2 Holder (399913603) 3 Master 2 (499917200)

Fig. 7-151 Measurement of clearance to select a shim and spacer

d. Select a combination of a shim and a spacer from those in the following table.

Thickness of shim plus spacer to be installed should be determined by the following formula.

$$t = 10 + h + [\pm H \times 0.001] + 0.07$$

unit: mm

t : Thickness of shim plus spacer to be installed
H : Number stamped on Spacer (399913604)
h : Movement of Spacer (399913604) in axial direction (dial gauge reading)

Unit: mm (in)

Drive pinion spacer	
Part number	t
446107001	9.600 (0.3780)
446107002	9.625 (0.3789)
446107003	9.650 (0.3799)
446107004	9.675 (0.3809)
446107005	9.700 (0.3819)
446107006	9.725 (0.3829)
446107007	9.750 (0.3839)
446107008	9.775 (0.3848)

Unit: mm (in)

Drive pinion shim	
Part number	t
441967001	0.6 (0.024)
441967002	0.8 (0.031)
441967003	1.0 (0.039)

NOTE:
a. If the shim and spacer which are installed are thinner than the thickness calculated by the formula, the preload will be greater than what is indicated by the spring balance.
If the selected thickness is thicker than the calculated one, the preload will be smaller than the reading on the spring balance.
b. Dial Gauge should be fixed firmly as shown in the previous figure.
c. The selected shim and spacer should be installed after adjusting the pinion height.

Downloaded from www.Manualslib.com manuals search engine

9) Adjustment of drive pinion height

a. Drive pinion height adjustment is made by shim(s) inserted between the front bearing cone and the back face of the pinion gear.

With the devices for preload measurement installed and tightened as described in "f", set Master (399913601) and Gauge (398643600) to measure the clearance N between Master and Gauge using Thickness Gauge (499667000) as shown in the following figures.

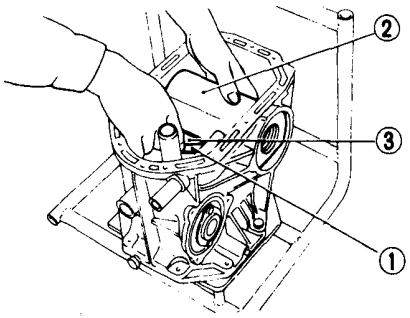

1 Gauge (398643600)
2 Master (399913601)
3 Thickness gauge

A13-317

Fig. 7-152 Measurement of drive pinion height clearance

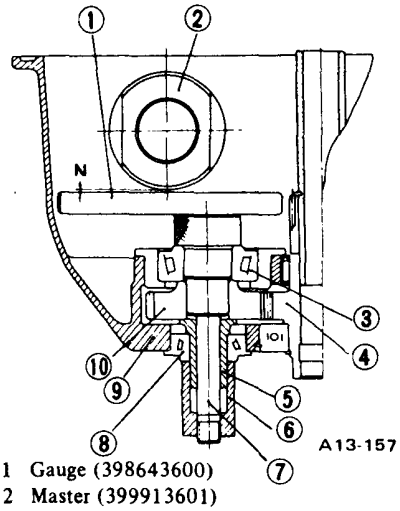

A13-157

1 Gauge (398643600)
2 Master (399913601)
3 Taper roller bearing
4 Reduction drive gear
5 Spacer (399913604)
6 Holder (399913603)
7 Master 2 (499917200)
8 Taper roller bearing
9 Case (differential & reduction)
10 Reduction driven gear

Fig. 7-153 Adjustment of drive pinion height

NOTE:

a. When inserting Master into the hole of the final reduction case be careful not to damage the hole surface. Damaged surface must be reconditioned with oil stone, etc. since it can result in oil leakage from the periphery of the axle shaft oil seal holder.

b. Applying oil around Master makes its setting easier.

b. Thickness of adjusting shim(s) (1 to 3 pieces) to be installed can be obtained by the following formula.

$$T = N + [\pm G \times 0.001] + [\pm L \times 0.001]$$

T : Shim thickness
N : Measurement by thickness gauge
G : Figure on Gauge (398643600)
L : Figure on Master (499917002)
Unit: mm

c. Select shim(s) from those in the table.

Unit: mm (in)

Shim 2	
Part number	t
442182511	0.150 (0.0059)
442182512	0.175 (0.0069)
442182513	0.200 (0.0079)
442182514	0.225 (0.0089)
442182515	0.250 (0.0098)
442182516	0.275 (0.0108)
442182517	0.300 (0.0118)
442182518	0.500 (0.0197)

10) Installation of drive pinion.

a. Install the shim(s) selected in the drive pinion height adjustment to the drive pinion, and press the front bearing cone (the same one as used in the preload adjustment previously described) into drive pinion using Installer (899580100) and Installer (899874100).

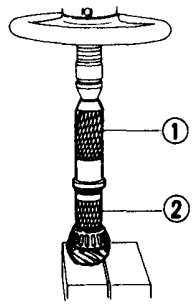

1 Installer (899580100)
2 Installer (899874100)

A13-318

Fig. 7-154 Installation of front bearing cone

NOTE:

Do not press the bearing retainer with Installer.

b. Install the drive pinion with the reduction driven gear in place and install the shim and spacer determined during the preload adjustment, and the rear bearing cone onto the drive pinion.

c. Install the lock washer and lock nut.

Using Shaft (398653600), Stopper (398781600), and Socket Wrench (499987100), tighten the nut to specification as shown in the figure and stake the lock nut.

Torque (Lock nut)	118 N·m (12 kg-m, 87 ft-lb)

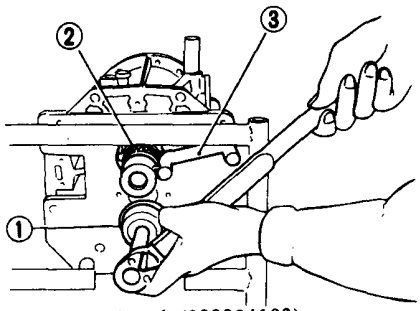

1 Socket Wrench (899984103)
2 Shaft (398653600)
3 Stopper (398781600)

A13-345

Fig. 7-155 Tightening of drive pinion lock nut

11) Recheck of preload.

a. Recheck the preload by attaching Pulley (498567000) to the lock nut as shown in the figure. If the reading of the spring balance is not within 29 to 39 N (3 to 4 kg, 7 to

Downloaded from www.Manualslib.com manuals search engine

9 lb) select another shim and spacer combination.

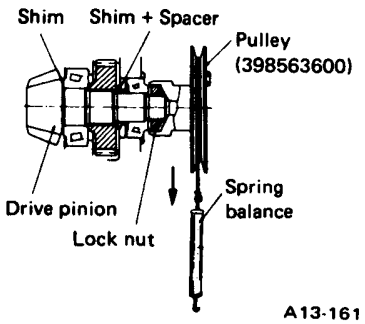

Fig. 7-156 Recheck of preload

b. When rechecking the preload by using Socket Wrench (499987100) and beam type torque wrench, observe whether the starting friction torque is within the following range.

1.23 – 1.62 N·m (12.5 – 16.5 kg-cm, 10.9 – 14.3 in-lb)

NOTE:
Before measuring preload, insert Shaft (398653600) into the splined end of the reduction drive gear, and install Handle (899924100) to give the shaft 2 or 3 turns.
After rechecking the preload, stake the lock nut at two points.

12) Installation of differential ASSY.

a. Insert the differential ASSY without axle shaft into final reduction case.

NOTE:
Pay attention not to damage the axle shaft oil seal holder bores in final reduction case.

b. Install the right and left axle shafts and secure with the snap rings.
Check the clearance between the differential pinion shaft and the axle drive shaft to see that it is within the specifications.

Specified clearance	0 – 0.2 mm (0 – 0.008 in)

Two snap rings are available for the adjustment of the above clearance.

Snap ring	
Part number	Thickness: mm (in)
805026010	1.00 – 1.10 (0.0394 – 0.0433)
031526000	1.15 – 1.25 (0.0453 – 0.0492)

c. Install axle shaft oil seal holder with Wrench (399780111).

NOTE:
a. Pay attention to the R and L marks of the oil seal.
b. Remove the O-rings on the axle shaft oil seal holders.

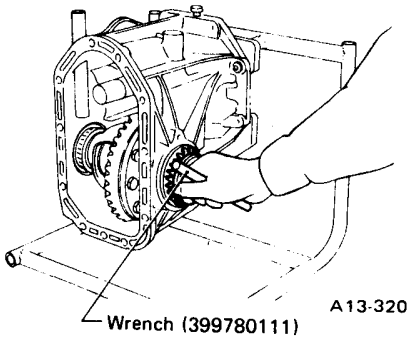

Fig. 7-157

d. Install Handle (899924100) and Shaft (398653600) to the reduction drive gear, and turn the gear several times, and screw in the holder on the crown gear side until it lightly bottoms.
Repeat this operation several times to locate the proper position.

e. Screw in the other holder until it bottoms.

f. Attach oil seal holder lock plate and back off holder on the crown gear side approx. 1.5 notches, and tighten holder on the opposite side.

g. Temporarily tighten the lock plate on the crown gear side.

h. Screw in the holder opposite the crown gear by 0.5 to 1 notch, and tighten the lock plate temporarily.

13) Measurement of backlash between crown gear and drive pinion.
Turn Handle (899924100) several times, and attach Magnet Base (498247001) with Dial Gauge (498247100) to Stand.
Check the hypoid gear backlash to see if it is within the specifications.

Backlash between crown gear and drive pinion	0.10 – 0.18 mm (0.0039 – 0.0071 in)

14) Crown gear tooth contact patterns.
Apply a coat of Prussian blue over the three or four tooth faces of the crown gear, move the gear in forward and backward directions to obtain gear contact patterns.
Refer to the figure for various gear contact patterns.
If proper gear contact patterns are not obtained, readjust. If correct adjustment has been made, loosen the holder until the O-ring groove is appeared, then fit the O-ring into the groove and tighten in the holder to the position where the holder has been tightened to. Place the lock plate on the holder and tighten it to the specified torque. Perform the same job with the opposite axle shaft oil seal holder.

Torque (Lock plate)	22 – 27 N·m (2.2 – 2.8 kg-m, 16 – 20 ft-lb)

15) Installation of governor ASSY.

a. Apply a coat of vaseline to needle bearing for governor shaft and the sealing lip of oil seal. Install governor ASSY.

NOTE:
When installing the governor valve, be careful not to damage the seal ring and oil seal lip inside of the final reduction case.

b. Install gasket and governor cover with the mating surface of governor cover clean.
Tighten cover attaching bolts to the specified torque.

Torque	14 – 17 N·m (1.4 – 1.7 kg-m, 10 – 12 ft-lb)

NOTE:
a. Before installing the cover, attach the washer to the governor cover with vaseline.
b. Replace the gasket with new one at every disassembly.

Downloaded from www.Manualslib.com manuals search engine

Crown Gear Tooth Contact Pattern

Checking item	Contact pattern	Corrective action
Correct tooth contact Tooth contact pattern slightly shifted toward toe under no-load rotation (When loaded, contact pattern moves toward heel.)		
Face contact Backlash is too large.	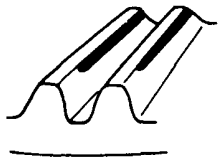 This may cause noise and chipping at tooth ends.	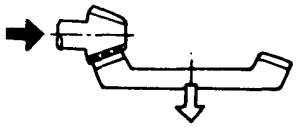 Increase thickness of drive pinion hight adjusting shim in order to bring drive pinion close to crown gear.
Flank contact Backlash is too small.	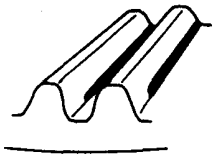 This may cause noise and stepped wear on surfaces.	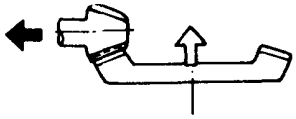 Reduce thickness of drive pinion hight adjusting shim in order to move drive pinion away from crown gear.
Toe contact (Inside end contact)	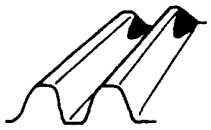 Contact area is small. This may cause chipping at toe ends.	Adjust as for flank contact. 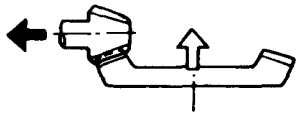
Heel contact (Outside end contact)	Contact area is small. This may cause chipping at heel ends. 	Adjust as for face contact. 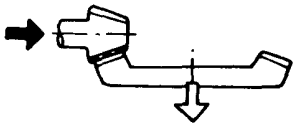

A13-164

Fig. 7-158 Tooth contact of crown gear

16) Installation of stator shaft.
Install the stator shaft to the converter housing with the gasket in place and with the flange of the shaft facing upward.

Torque	23 – 26 N·m (2.3 – 2.7 kg-m, 17 – 20 ft-lb)

17) Mating of final reduction case and converter housing.
a. Clean the mating surface.
b. Apply a coat of differential gear oil on the reduction drive gear shaft before mating the cases to facilitate the insertion of the reduction drive gear shaft into the stator shaft oil seal.
c. Replace the gasket with new one.

Torque	23 – 26 N·m (2.3 – 2.7 kg-m, 17 – 20 ft-lb)

18) Installation of parking actuator.
Install the actuator with the spacer on final reduction case.

Downloaded from www.Manualslib.com manuals search engine

Torque	8 – 11 N·m (0.8 – 1.1 kg-m, 5.8 – 8.0 ft-lb)

NOTE:
When separating the final reduction case from Stand, be careful not to damage the gasket.

8 FINAL REDUCTION COMPONENTS

1) Reduction Drive Gear

When gears, bearings, oil seals, etc. are damaged or when the passage in the air breather for the oil seal is blocked, disassemble and correct.

Disassembly

1) Using a flat-bladed screwdriver, detach snap ring.

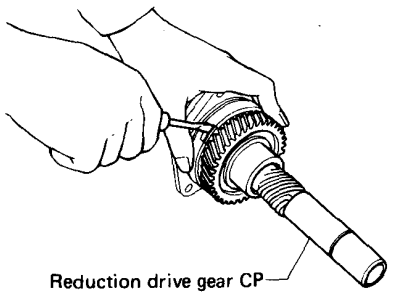

Fig. 7-159 Removing the snap ring

2) Press the drive gear and ball bearing (from the holder) out, using Guide (498847000).

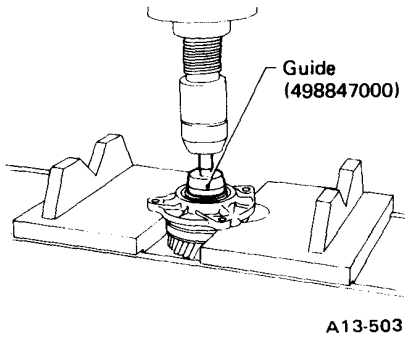

Fig. 7-160 Removing the drive gear

3) Press the oil seal out.
4) Pry the snap ring off the reduction drive gear, using the special tool and remove the bearing using Guide (498847000) and Remover (499717000).

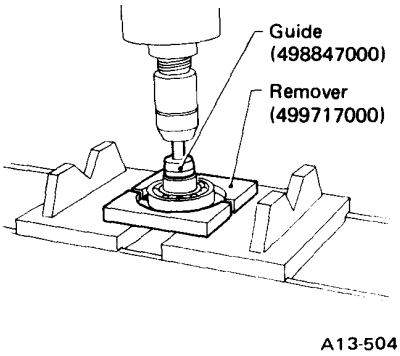

Fig. 7-161 Removing the bearing

Assembly

1) Press the bearing into the holder and install the snap ring.

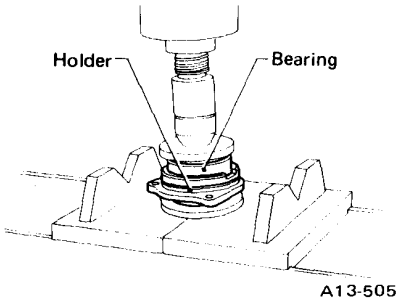

Fig. 7-162 Installing the bearing

2) Using a press, drive the bearing holder (incl. the bearing) into the reduction drive gear.

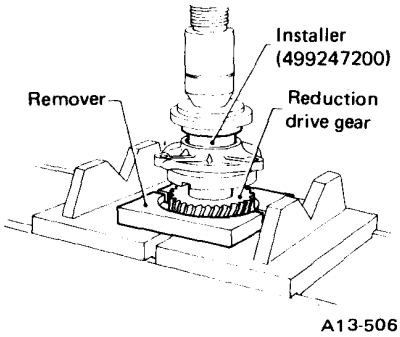

Fig. 7-163 Installing the reduction drive gear

3) Install the snap ring and, using Installer 499247100, Guide 498847000 and Spacer 499267100, drive the oil seal into holder.

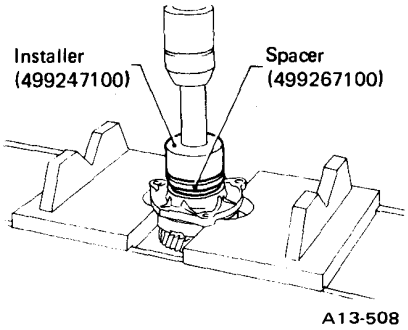

Fig. 7-164 Driving the oil seal into place

NOTE:
a. When installing the snap ring, be careful not to damage the oil seal surface.
b. Always install the two oil seals with their backs facing each other.

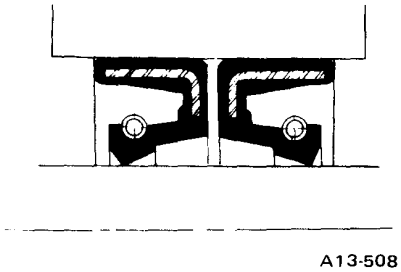

Fig. 7-165

2) Governor Valve Assembly

Refer to "9." in 2. On-car Service.

3) Differential Assembly

Refer to Chapter 6 "Manual Transmission and Differential".

4) Drive Pinion Rear Bearing Cup

Attach Installer (399513600) to the end face of the bearing cup from the inside of the case, and press it out.
Installer is also used when installing the bearing cup.

Downloaded from www.Manualslib.com manuals search engine

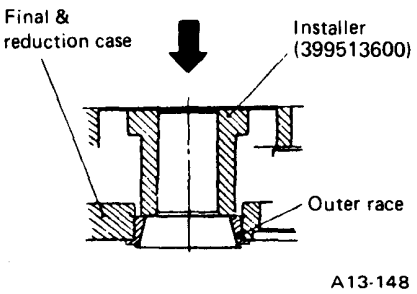

Fig. 7-166 Removal of drive pinion rear bearing cup

NOTE:
When assembling, be sure to press the bearing cup until its end surface of flange contacts the final reduction case.

5) Drive Pinion Front Bearing Cone

Using Replacer (498517000), remove drive pinion front bearing cone as shown in the figure.

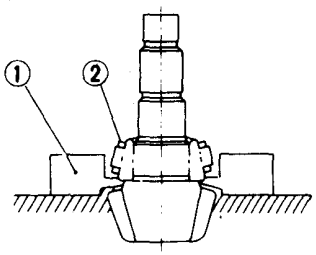

Fig. 7-167

When assembling, press it with Installer (899580100) and Installer (899874100).

NOTE:
Don't press the bearing retainer with Installer.

6) Drive Pinion Front Bearing Cup

Press out drive pinion front bearing cup with Drift (398437700).
In assembling, press the cup with Installer (499427000) until its end surface contacts thrust bearing retainer.

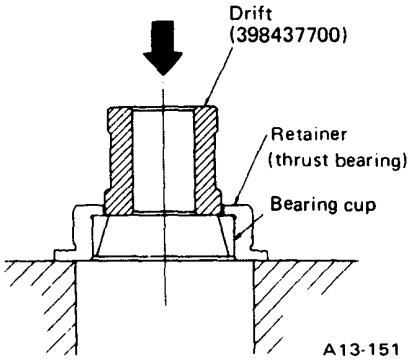

Fig. 7-168 Removal of drive pinion front bearing cup

7) Bearing Cup and Oil Seal in Axle Shaft Oil Seal Holder

1) Bearing cup
a. Remove bearing cup from holder with Puller (399703600) as shown in the figure.

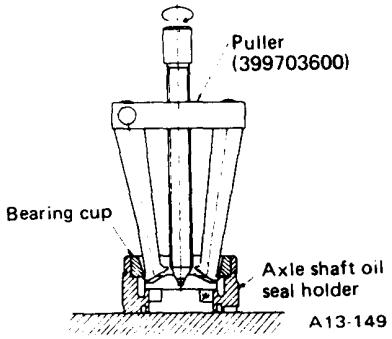

Fig. 7-169 Removal of bearing cup from axle shaft oil seal holder

b. Press bearing cup into holder with Installer (499427000) until its end contacts the end of holder as shown in the figure.

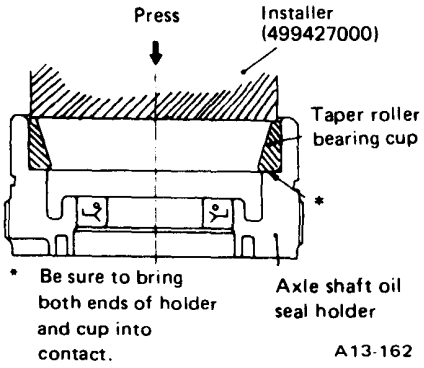

Fig. 7-170 Installing bearing cup

2) Oil seal
a. Remove oil seal from holder with Represser (498107000).
b. Press oil seal into holder with Installer (399790100).

NOTE:
Note that the right and left oil seals are different.
After installation of the oil seal, apply a coat of differential gear oil to the sealing lip.

8) Speedometer Shaft and Oil Seal

Remove the snap ring from the tip of the speedometer shaft, and drive the speedometer shaft out of the case by lightly applying hammer blows to it. The oil seal will be removed together with the shaft.
Remove a washer remaining in the case.
To install, install the speedometer shaft with the washer into the case and drive the oil seal in by applying hammer blows on Press (499827000).

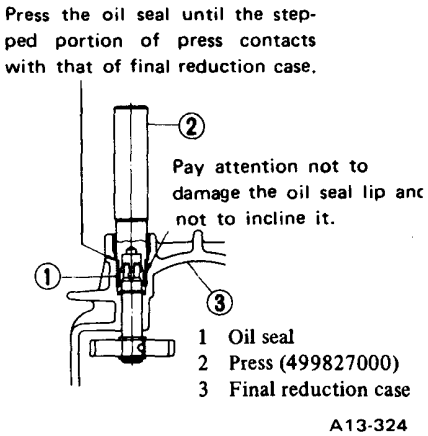

Fig. 7-171

9) Needle Bearing at Reduction Drive Gear

1) Remove bearing from the front side using Remover (399863610) and Handle (498477000) by press.

NOTE:
Make sure to remove governor shaft beforehand.

2) Press bearing into case using Remover (399863610) and Guide (498807000) as shown in the figure.

Downloaded from www.Manualslib.com manuals search engine

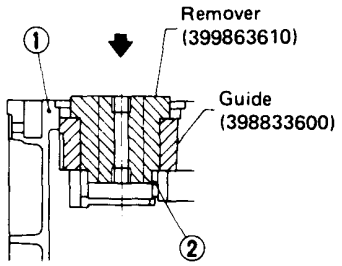

1 Final reduction case
2 Needle bearing
A13-369

Fig. 7-172 Installation of needle bearing

10) Oil Seal and Needle Bearing of Governor Shaft

1) Remove bolts securing governor sleeve to the case and remove the governor sleeve.
2) Remove needle bearing and oil seal with Puller Set (499527000) as shown in the figure.

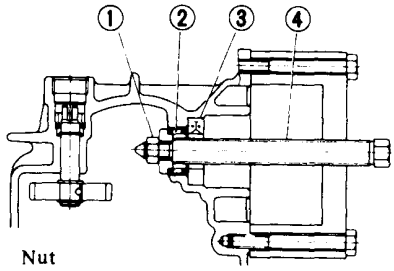

1 Nut
2 Needle bearing
3 Oil seal
4 Puller Set (499527000)
A13-326

Fig. 7-173 Removal of needle bearing and oil seal on governor shaft

3) Install needle bearing with Puller Set (499527000) and Installer (399793600) as shown in the figure.

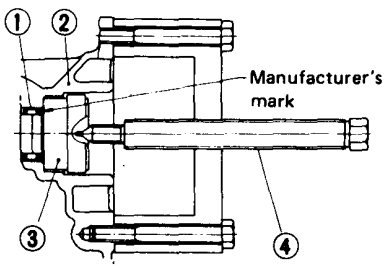

1 Needle bearing
2 Final reduction case
3 Installer (399793600)
4 Puller Set (499527000)
A13-327

Fig. 7-174

4) Install oil seal with Puller Set (499527000) and Installer (399793600) as shown in the figure.

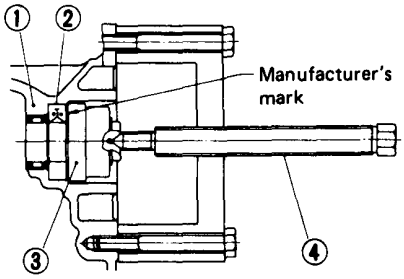

1 Final reduction case
2 Oil seal
3 Installer (399793600)
4 Puller Set (499527000)
A13-328

Fig. 7-175 Installation of oil seal

5) Install governor sleeve to case and tighten bolts to the specified torque.

Torque	4 – 5 N·m (0.4 – 0.5 kg-m, 2.9 – 3.6 ft-lb)

NOTE:
a. Make sure to install governor sleeve into case with its drain hole facing downward.
b. When installing governor sleeve to case, be sure to install seal ring.

11) Bushing and Oil Seal in Converter Housing

1) Remove oil seal from converter housing with thin minus screwdriver or the like.

NOTE:
Pay attention not to damage the contact surface of housing.

2) Remove bushing by using Replacer (498107000) and Handle (498477000) as shown in the figure.

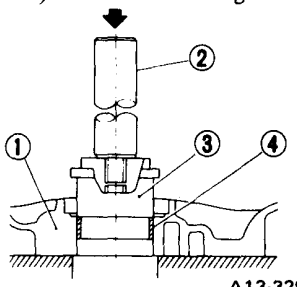

1 Converter housing
2 Handle (498477000)
3 Replacer (498107000)
4 Bushing
A13-329

Fig. 7-176 Removing bushing

3) Press bushing into housing with Replacer upsidedown as shown in the figure.

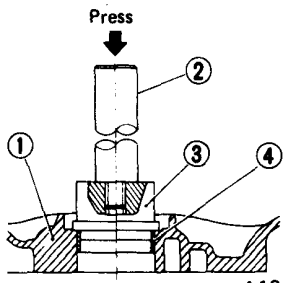

1 Converter housing
2 Handle (498477000)
3 Replacer (498107000)
4 Bushing
A13-330

Fig. 7-177 Pressing bushing

4) Press oil seal into housing by using Drift (398437700) as shown in the figure.

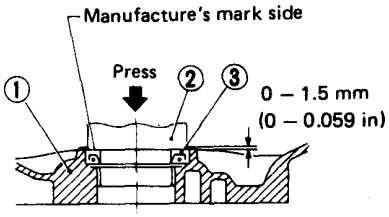

1 Converter housing
2 Drift (398437700) or the equivalent with 58 to 60 mm (2.28 to 2.36 in) outer diameter.
3 Oil seal
A13-331

Fig. 7-178 Pressing oil seal

NOTE:
a. When pressing oil seal, be careful not to incline it.
b. Apply the ATF around the oil seal lip.

9 ASSEMBLY OF THE ENTIRE AUTOMATIC TRANSMISSION

1) Joining the Transmission Case Section to the Final Reduction Case Section

1) Set the final reduction case section with converter housing downward.
2) Clean the mating surfaces of the cases.
3) After putting Guide (499257100) on the spline portion of drive pinion rear end, join the transmission case

Downloaded from www.Manualslib.com manuals search engine

section to the final reduction case section. Also install transfer drive shaft.

Torque	23 – 26 N·m (2.3 – 2.7 kg-m, 17 – 20 ft-lb)

NOTE:

a. Be careful that the parking rod and parking actuator engages properly and the sealing lip is not damaged when assembling the cases.

b. Engagement of the reduction drive gear and planetary output gear will be completed easily by giving a slow and staccato turn to the axle drive shaft.

c. Apply a thin coat of ATF to Guide beforehand.

4) Install the following parts to the transmission case.

a. Control valve
b. Vacuum diaphragm ASSY
c. Down shift solenoid valve
d. Servo apply pipe and servo release pipe
e. Oil pan

5) Install the turbine shaft and oil pump drive shaft to the transmission, with the oil supply ports positioned as shown in the figure.

The turbine shaft and pump drive shaft must be installed from the front of the transmission.

Install the torque converter ASSY onto the stator shaft, turbine shaft and pump drive shaft.

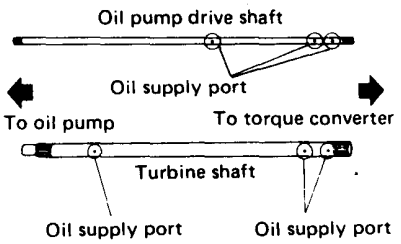

A13-169

Fig. 7-179 Turbine shaft and oil pump drive shaft

NOTE:

Take care not to damage the oil seal in the converter housing.

6) Install vacuum pipe, oil supply pipe, ground wire and oil cooler pipe.

2) Joining the Transfer Case Section to the Transmission Case Section

1) Install the extension ASSY.

Using the selected washer in the intermediate case, install the extension ASSY and tighten the eight 8 mm bolts to the specified torque.

Tightening torque	25 N·m (2.5 kg-m, 18 ft-lb)

NOTE:

a. Tighten the clip (one place) for the transfer solenoid harness with one of the eight bolts.

b. Be sure to install the seal ring.

2) Install the transfer solenoid.

Attach the "O" ring to the bore in the extension case and install the transfer solenoid.

NOTE:

Always install the solenoid securely with your hand—not by any tool.

3) Install the temperature switch.

Install the temperature switch with the gasket in place and tighten to the specified torque.

Tightening torque	18 N·m (1.8 kg-m, 13 ft-lb)

NOTE:

Always use a new gasket.

4) Fasten the harnesses with clamps.

5) Install the rear engine mount rubber cushion and tighten the two 8 mm bolts to the specified torque.

Tightening torque	25 N·m (2.5 kg-m, 18 ft-lb)

7. Remounting

1) With car body and engine in the same position as when they were removed, support transmission on jack just behind engine.

2) Carefully raise jack until transmission is aligned with engine, and secure it to engine. Be careful not to allow transmission to strike any adjacent parts while raising jack.

NOTE:

a. Apply a coat of grease to the splines of the transmission mainshaft in advance.

b. If the mainshaft is hard to align with the engine, simultaneously turn the left and right transmission drive shafts until the mainshaft splines engage with the engine.

3) Install the rear crossmember on the car body as follows:

a. Align the rubber cushion guide with the guide on the crossmember, and secure the crossmember to the car body with the bolts.

Torque	8 mm bolt: 10 – 18 N·m (1.0 – 1.8 kg-m, 7 – 13 ft-lb)
	12 mm bolt: 88 – 118 N·m (9.0 – 12 kg-m, 65 – 87 ft-lb)

b. Tighten the rubber cushion retaining nuts.

Torque	20 – 33 N·m (2.0 – 3.4 kg-m, 14 – 25 ft-lb)

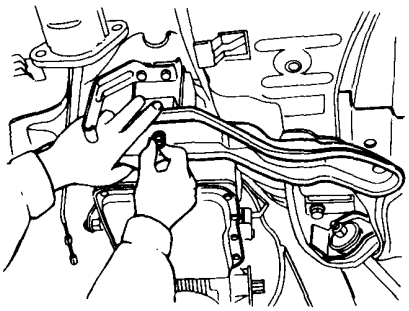

A4-138

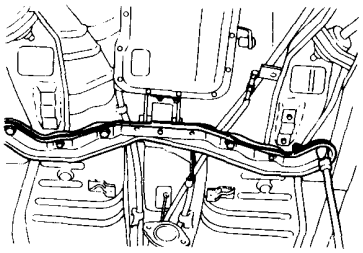

A4-134

Fig. 7-180 Installing crossmember

Downloaded from www.Manualslib.com manuals search engine

4) Remove the jack from underneath the transmission.
5) Clamp the parking brake cable to the body.
- Tightening torque for cable cover:

Torque	3 – 6 N·m (0.3 – 0.6 kg-m, 2.2 – 4.3 ft-lb)

6) Align the spring pin holes on the axle shaft and drive shaft, and drive the spring pin into the holes.

NOTE:
Always install a new spring pin.

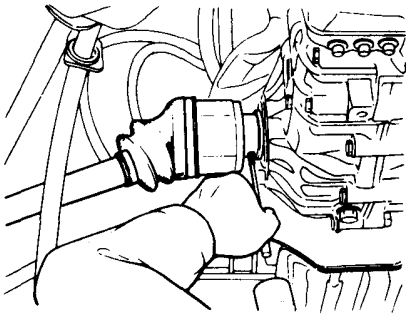

A15-015

Fig. 7-181 Installing axle shaft

7) Using a screwdriver, properly align the bolt holes on both the left and right transverse links with the cross-member, and insert the bolts into the holes from the front side. Tighten the nuts securely.

NOTE:
a. Always use new nuts.
b. Tighten the nuts to the specified torque after finishing all work and lowering the car to the floor.

Torque	59 – 69 N·m (6.0 – 7.0 kg-m, 43 – 51 ft-lb)

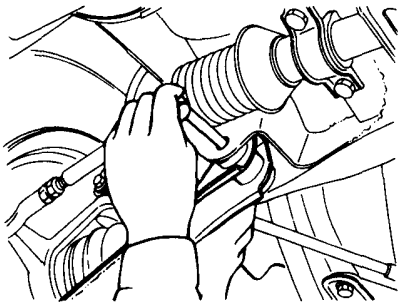

A4-128

Fig. 7-182 Installing transverse link

8) Install the stabilizer.
Be sure to position the two center bushings with their slits facing the rear side of the car and the two outer bushings with their slits facing the inside.

Torque	18 – 22 N·m (1.8 – 2.2 kg-m, 13 – 16 ft-lb)

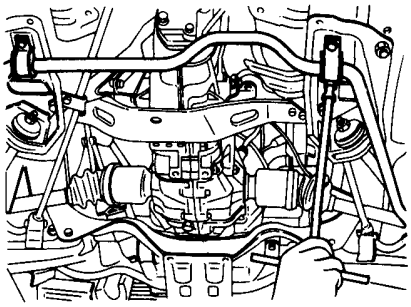

A4-125

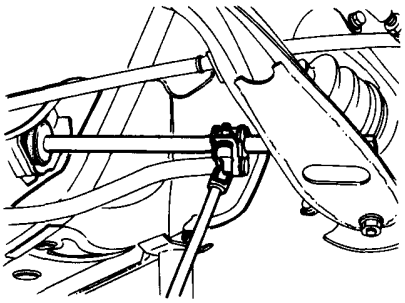

A4-126

Fig. 7-183 Installing stabilizer

9) Move the select lever to the "P" position, insert the linkage rod into the manual lever, set the select lever at "N" position, and then tighten the nut.

Torque	10 – 18 N·m (1.0 – 1.8 kg-m, 7 – 13 ft-lb)

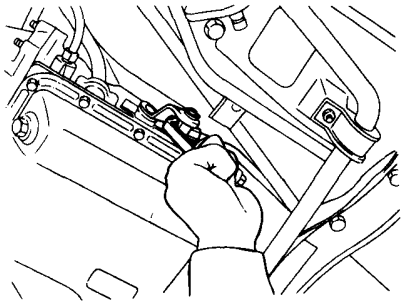

A4-144

Fig. 7-184 Connecting linkage

10) Connect the oil supply pipe.

NOTE:
Be careful not to damage the O-ring.

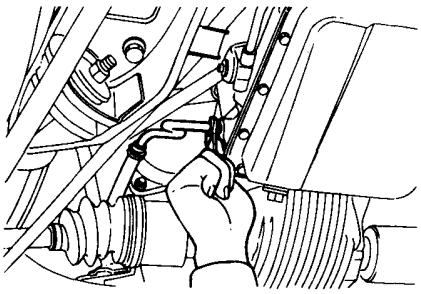

A4-120

Fig. 7-185 Installing oil supply pipe

11) Install the front exhaust pipe ASSY as follows:
a. Position the exhaust pipe on the bracket on the car body, and secure it with the bolts.
b. Install a new gasket to the exhaust port of the engine, and temporarily tighten the exhaust pipe retaining nuts.
c. Temporarily tighten the front and rear exhaust pipes with the new gasket in place.
d. After making sure that the exhaust pipe ASSY is properly positioned, re-tighten the bolts and nuts securely.

Torque
Front exhaust pipe to engine: 25 – 29 N·m (2.6 – 3.0 kg-m, 19 – 22 ft-lb)
Front exhaust pipe to rear exhaust pipe: 42 – 52 N·m (4.3 – 5.3 kg-m, 31 – 38 ft-lb)
Front exhaust pipe to bracket: 25 – 34 N·m (2.5 – 3.5 kg-m, 18 – 25 ft-lb)

Downloaded from www.Manualslib.com manuals search engine

NOTE:
Be careful not to strike the oxygen sensor against any adjacent parts during installation.

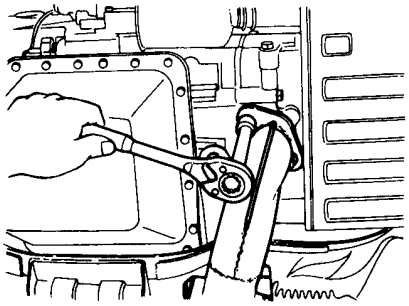

A4-093

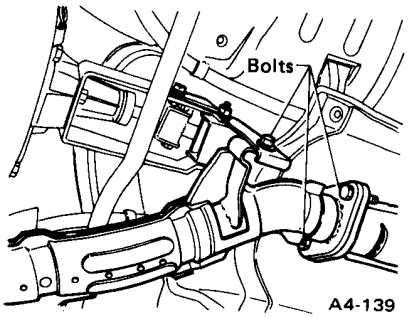

A4-139

Fig. 7-186 Installing front exhaust pipe

12) Securely connect O_2 sensor harness to O_2 sensor and clamp it.
13) Connect the hot air intake hose.
14) Lower the car body to the floor.
15) Tighten the bolts and nuts which retain the engine to the transmission to the specified torque. Also install the starter.

Torque	46 – 54 N·m (4.7 – 5.5 kg-m, 34 – 40 ft-lb)

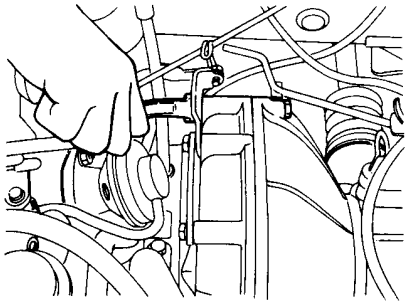

A4-105

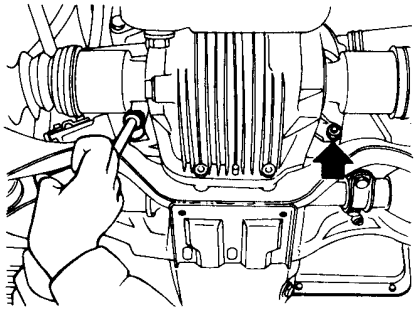

A4-096

Fig. 7-187 Tightening bolts and nuts

16) Install the torque converter and drive plate as follows:
a. Using a jack, raise the car body just enough to clear the floor.
b. Using a wrench, crank the engine until the drive plate mounting hole is brought to the center of the timing hole.
c. Rotate the wheel until the holes on the torque converter and drive plate are properly aligned. Then, install and tighten the bolts.
d. Crank the engine with a wrench and securely tighten all four retaining bolts – one bolt at a time for each turn – to retain the torque converter and drive plate.

Torque	23 – 26 N·m (2.3 – 2.7 kg-m, 17 – 20 ft-lb)

NOTE:
Be careful not to drop the bolts into the torque converter housing.

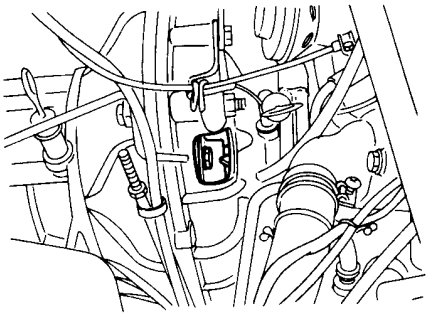

A4-112

Fig. 7-188 Connecting torque converter and drive plate

17) Adjust the pitching stopper as follows:
a. Loosen the nut until the pitching stopper on the bracket (on the engine side) is free to move.
b. Tighten the rear nut until the rubber cushion-to-washer clearance is within specified value.

Specified clearance	1.8 – 2.2 mm (0.071 – 0.087 in)

c. Attach a wrench to the rear nut, and tighten the front nut securely.

Torque	10 – 18 N·m (1.0 – 1.8 kg-m, 7 – 13 ft-lb)

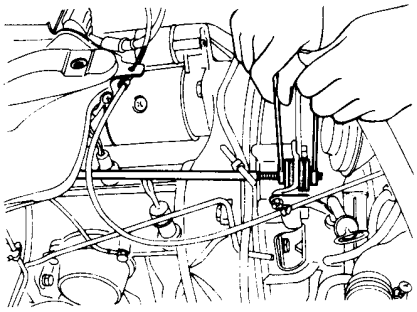

A4-113

Fig. 7-189 Adjusting pitching stopper

18) Connect the speedometer cable to the transmission, and tighten it hard with your fingers. Then, using pliers, retighten the cable by approximately 30°.

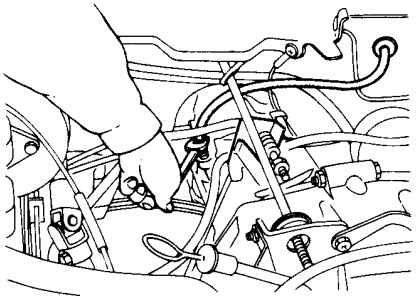

A4-116

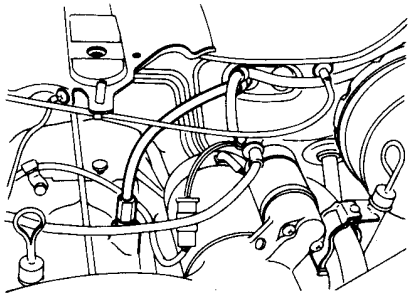

A4-117

Fig. 7-190 Connecting speedometer

Downloaded from www.Manualslib.com manuals search engine

19) Route the speedometer cable underneath the pitching stopper with the battery cable, and clamp it on the pitching stopper.
20) Make all necessary wiring connections.

NOTE:
Be sure to connect the ground cable.

21) Connect the diaphragm vacuum hose and oil cooler hose.

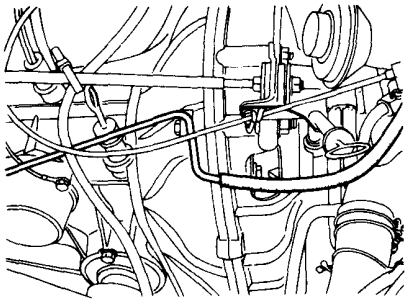

A4-115

Fig. 7-191 Connecting vacuum hose

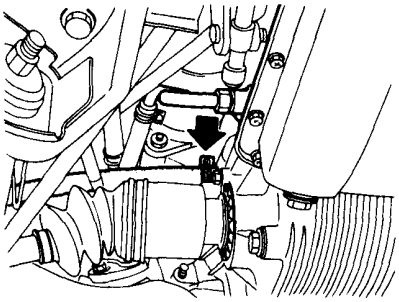

A4-118

Fig. 7-192 Connecting oil cooler hose

22) Connect the battery ground cable.
23) Check the transmission oil level and, if necessary, add oil.
24) Start the engine and add ATF up to the specified level.
25) Start engine. Check exhaust pipe connections to ensure there is no gas leakage.
26) Check the operation of clutch for smooth engagement and disengagement.
27) Check the operation of shift lever or select lever for smooth gearshifting.
28) After all work has been completed, install spare tire.

Downloaded from www.Manualslib.com manuals search engine

7-3. Transmission Control System

1. Component Parts

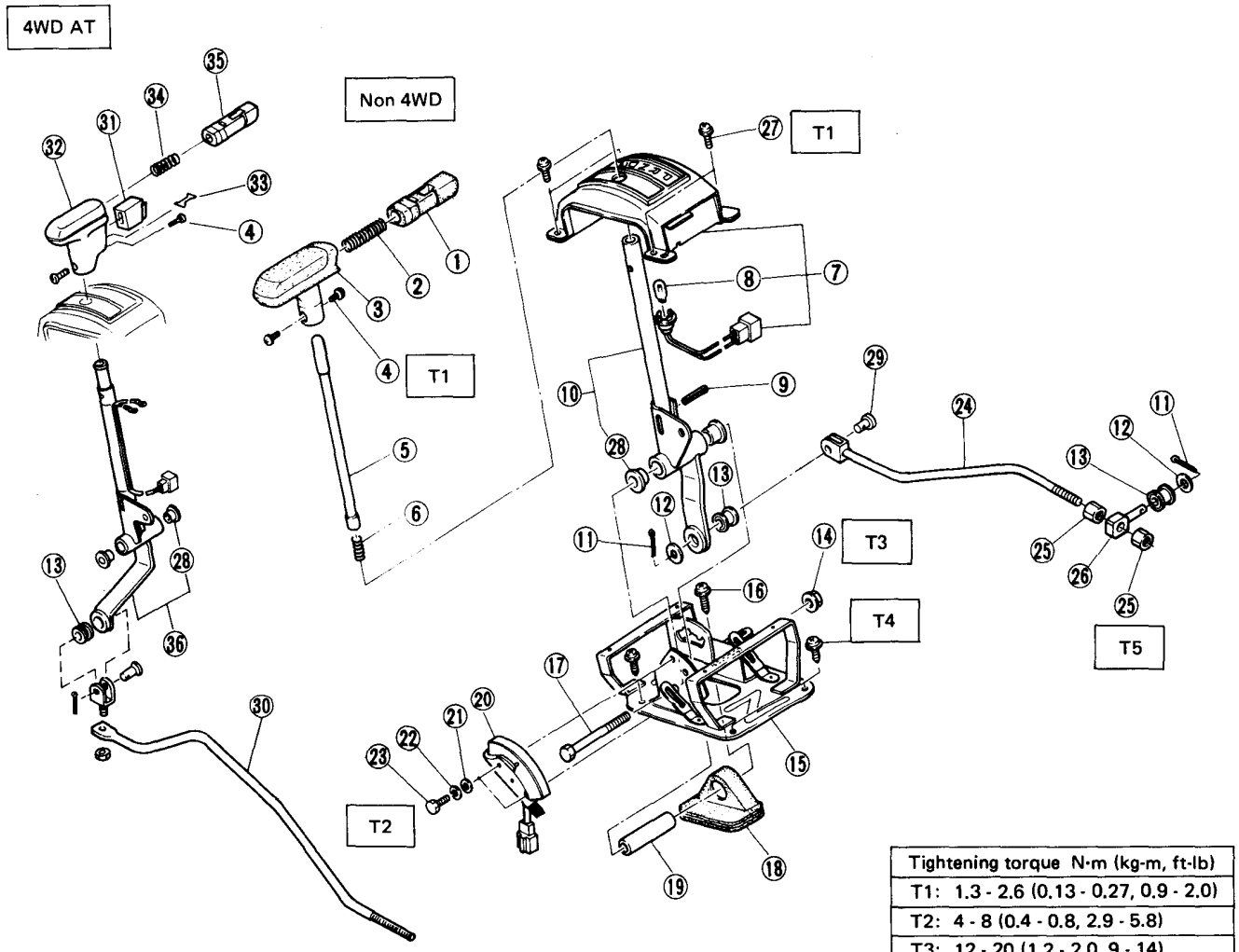

Tightening torque N·m (kg-m, ft-lb)
T1: 1.3 - 2.6 (0.13 - 0.27, 0.9 - 2.0)
T2: 4 - 8 (0.4 - 0.8, 2.9 - 5.8)
T3: 12 - 20 (1.2 - 2.0, 9 - 14)
T4: 4.4 - 7.4 (0.45 - 0.75, 3.3 - 5.4)
T5: 71 - 127 (7.2 - 13, 52 - 94)

1 Botton (Non-4WD)
2 Spring
3 Grip
4 Screw & washer
5 Selector lever rod
6 Speing
7 Indicator ASSY
8 Bulb
9 Spring pin
10 Selector lever CP (Non-4WD)
11 Cotter pin
12 Washer
13 Bushing
14 Flange nut
15 Plate
16 Flange tapping screw
17 Bolt
18 Boot
19 Spacer
20 Inhibitor switch
21 Washer
22 Spring washer
23 Bolt
24 Rod (Non-4WD)
25 Nut
26 Connector
27 Flange screw
28 Bushing
29 Clevis pin
30 Rod (4WD AT)
31 Switch
32 Grip
33 Spring
34 Spring
35 Button (4WD AT)
36 Selector lever CP (4WD AT)

A19-157

Fig. 7-193

Downloaded from www.Manualslib.com manuals search engine

2. Removal

1) Detach parking brake cover and console box.
2) Disconnect electric connectors for inhibitor switch and indicator illumination light.
3) Remove rod from transmission selector arm.

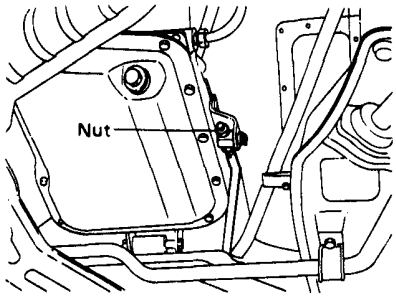

A4-143

Fig. 7-194

4) Remove screws and take out selector lever ASSY.

NOTE:
Before removing, set the selector lever to "N" position.

3. Disassembly

1) Remove rod, grip, indicator and inhibitor switch from selector lever ASSY.

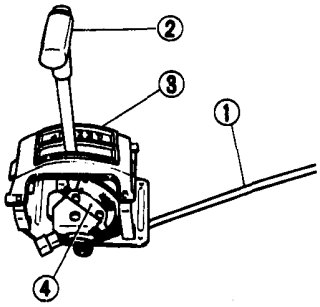

1 Rod
2 Grip
3 Indicator
4 Inhibitor switch

A19-075

Fig. 7-195

2) Drive out the spring pin to the position where it is detached from the guide plate as shown in figure.

NOTE:
Be careful not to damage the connected parts.

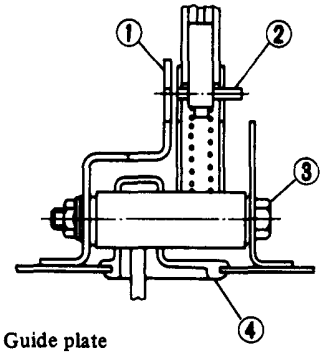

1 Guide plate
2 Spring pin
3 Selector lever installing bolt
4 Boot

A19-076

Fig. 7-196 Driving the spring pin

3) Remove selector lever installing bolt and detach the boot by pushing it from underneath, then disconnect the selector lever from plate.
4) Install the grip and button to the selector lever temporally, and drive the spring pin out from rod, taking care not to make damage on connected parts.

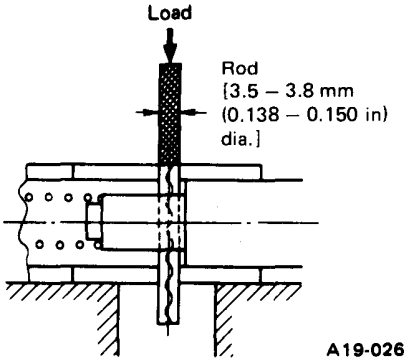

A19-026

Fig. 7-197 Driving out spring pin

NOTE:
Do not remove the bushings from selector lever.

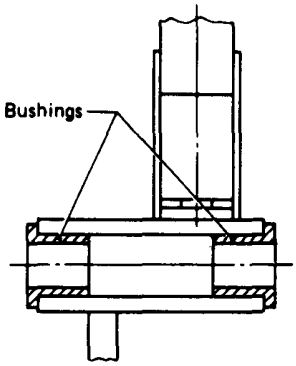

A19-027

Fig. 7-198 Selector lever bushings

4. Inspection

1) Inspect the removed parts by comparing with new ones for deformation, damage and wear. Correct or replace if defective.

2) Confirm the following parts for operating condition before assembly.

a. Sliding condition of the button in the grip. ... they should be moved smoothly.
b. Insertion of the grip on the selector lever ... When pushing the grip on selector lever by hand, the screw holes should be aligned in line.
c. Operation of the selector lever and rod. ... they should be moved smoothly.
d. Insertion of the spacer into the selector lever ... it should be inserted lightly by fingers.
e. The spacer should be inserted between guide plate and bracket.

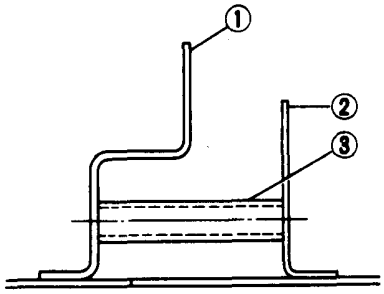

1 Guide plate
2 Bracket
3 Spacer

A19-078

Fig. 7-199

5. Assembly

1) Clean all disassembled parts.
2) Assemble rod to selector lever.
a. Apply grease on both sliding part ends of rod, then insert it into selector lever.

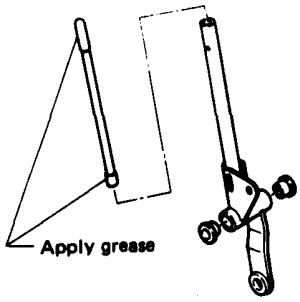

A19-079

Fig. 7-200

Downloaded from www.Manualslib.com manuals search engine

b. Match the oblong hole of selector lever and the spring pin hole of rod.

c. Press the spring pin into the selector lever and rod from arm side.
In order to prevent the spring pin from contacting with the guide plate, stop the spring pin at opposite side surface of the arm as shown in figure.

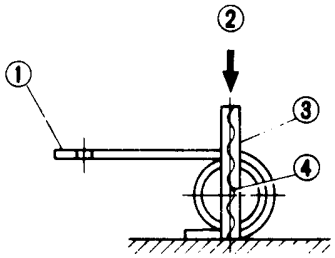

1 Arm
2 Pressing direction
3 Spring pin
4 Rod

A19-029

Fig. 7-201 Installing spring pin

3) Assemble the following parts to selector lever.

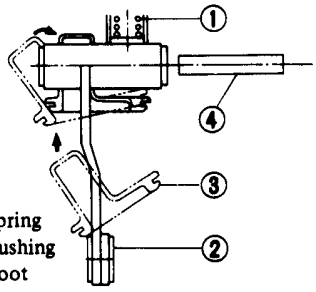

1 Spring
2 Bushing
3 Boot
4 Spacer

A19-080

Fig. 7-202

a. Spring
Apply grease to prevent noise.

b. Bushing

c. Boot
Coat grease on sliding surface of the boot.

d. Spacer
Coat grease on the surface of spacer.

4) Assemble selector lever to plate.

a. Install the selector lever to the plate complete, and insert the bolt. Tighten flange nut to the specified torque.

Torque (Flange nut)	12 – 20 N·m (1.2 – 2.0 kg-m, 9 – 14 ft-lb)

1 Flange nut
2 Spacer
3 Bolt
4 Plate complete

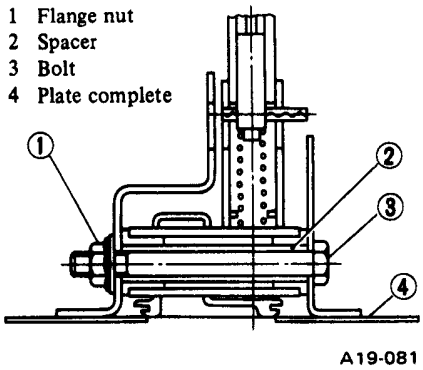

A19-081

Fig. 7-203

b. Insert the boot into the plate by pushing boot edge with fingers.

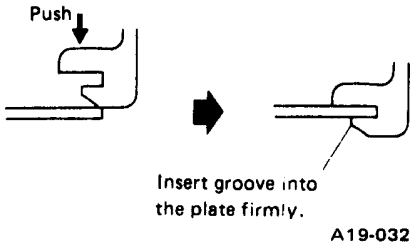

A19-032

Fig. 7-204 Inserting boot

c. Drive in the spring pin to the same level of arm outer surface.

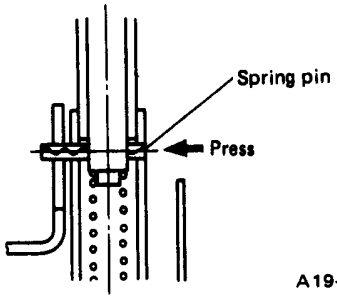

A19-082

Fig. 7-205

5) Assembling inhibitor switch.

a. If there is no knock pin prepared on the inhibitor switch, fix the moving plate by inserting a 2 mm (0.08 in) dia. rod into the knock pin hole while matching a hole of moving plate and knock pin hole at the case.

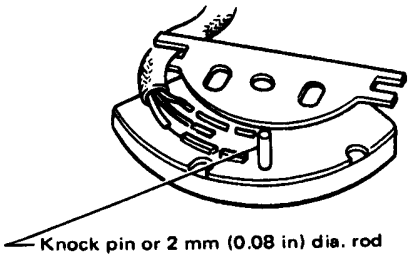

A13-251

Fig. 7-206

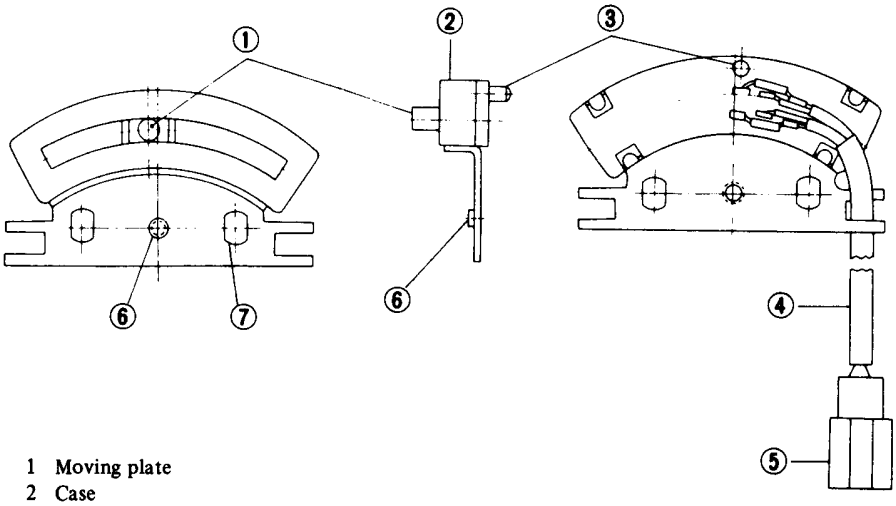

1 Moving plate
2 Case
3 Knock pin
4 Harness
5 Connector
6 Locator
7 Bolt hole

A19-083

Fig. 7-207

Downloaded from www.Manualslib.com manuals search engine

b. At the position where the selector lever is shifted in the "N" range and pushed to the "P" side lightly, match the locator to bracket hole, the moving plate pin to arm hole, then tighten the bolts to the specified torque.

Torque	4 – 8 N·m (0.4 – 0.8 kg-m, 2.9 – 5.8 ft-lb)

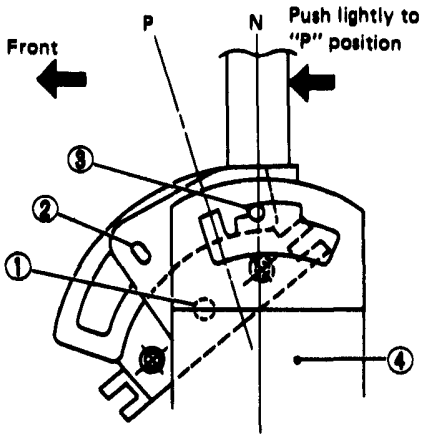

1 Locator
2 Moving plate pin
3 Spring pin position
4 Guide plate

A19-084

Fig. 7-208

c. Pull out the 2 mm (0.08 in) dia. rod (knock pin) at the inhibitor switch.

6) Assemble indicator to plate.

Torque (Flange screw)	1.3 – 2.6 N·m (0.13 – 0.27 kg-m, 0.9 – 2.0 ft-lb)

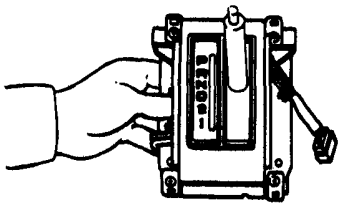

A19-085

Fig. 7-209

7) Assemble the grip, spring and button to selector lever.

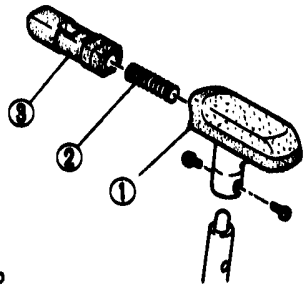

1 Grip
2 Spring
3 Button

A19-086

Fig. 7-210

a. Apply grease on the sliding part of the grip and button, and spring.
b. Insert the spring into the button and insert it into the grip from the spring side.
c. Insert the grip on the selector lever while pushing button in the grip.
d. Set the button to driver's side, then tighten screws to the specified torque with the torque driver.

Torque	1.3 – 2.6 N·m (0.13 – 0.27 kg-m, 0.9 – 2.0 ft-lb)

5 to 6 mm (0.20 to 0.24 in) length screw should be used.

8) After assembly, inspect the following items by shifting the selector lever from "P" to "1" range while pushing the grip button.

- Contact between indicator and selector lever.
- Matching of the pointer and position mark.
- Selector lever shifting force.

9) Assemble the following parts to selector lever.

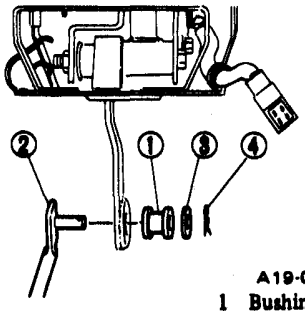

A19-087

1 Bushing
2 Rod
3 Washer
4 Cotter pin

Fig. 7-211

a. Bushing
Apply grease to the inside and side surface of bushing.
b. Rod
c. Washer
d. Cotter pin
After inserting the cotter pin into rod hole, be sure to bend it.

10) Screw in one nut fully to the threaded part of rod.

6. Installation

1) Install the following parts to transmission selector arm.

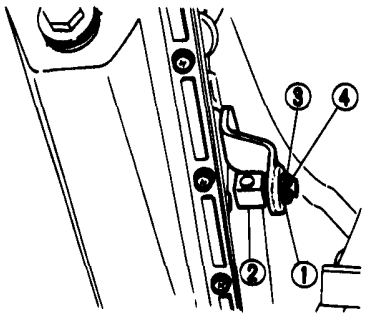

1 Bushing
2 Connector
3 Washer
4 Cotter pin

A19-088

Fig. 7-212

a. Bushing
Apply grease to the inside and side surface of bushing.
b. Connector
Insert the connector from transmission side.
c. Washer
d. Cotter pin
Be sure to bend cotter pin.

2) Pass the rod through connector and tighten a nut temporarily.

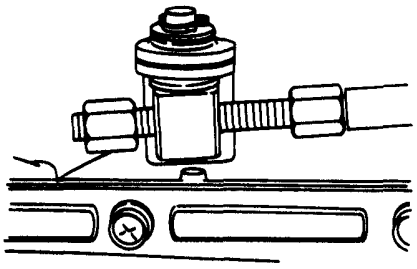

A19-089

Fig. 7-213

Downloaded from www.Manualslib.com manuals search engine

3) Install selector lever assembly to the body.

a. Affix butyl rubber tape around the through hole but inside the four thread holes.

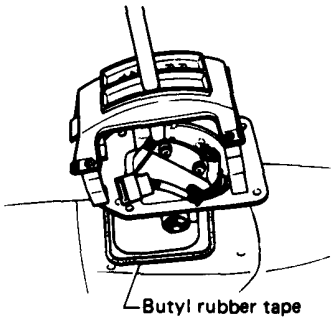

Fig. 7-214

b. Tighten flange tapping screws.

Torque	4.4 – 7.4 N·m (0.45 – 0.75 kg-m, 3.3 – 5.4 ft-lb)

c. Set the selector lever in "N" position.

4) Set the transmission selector arm in "N" position where the center of connector is aligned with the casted boss on transmission case.

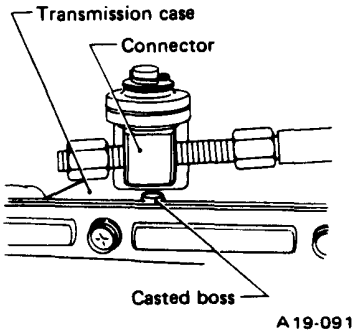

Fig. 7-215

5) Adjust connection of rod with selector arm as follows.

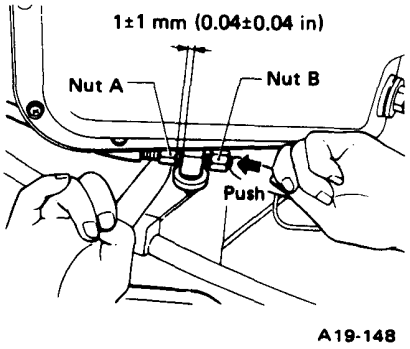

Fig. 7-216

a. While pushing the rod lightly by a finger [2.0 to 6.9 N (0.2 to 0.7 kg, 0.4 to 1.5 lb)], set the nut A apart from the connector by 1 ± 1 mm (0.04 ± 0.04 in) as shown in the above illustration.

b. While holding the nut A with a spanner, tighten the nut B.

Torque (Nut)	10 – 18 N·m (1.0 – 1.8 kg-m, 7 – 13 ft-lb)

6) After completing installation, make sure that the lever operates properly as follows.

a. The lever moves smoothly through all the positions.

b. In "N" or "D" position of the lever with the engine stopped, make sure the operation of the lever according to the following procedure.

① Set the lever to "N" position while pushing the button.

② Take your hand off the lever and button.

③ Try to move the lever to "R" position without pushing the button, and make sure that the lever does not move to "R" position.

NOTE:

At this time, the select lever spring pin must be kept at the position of the guide plate as shown in the following illustration.

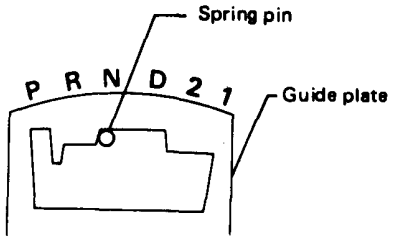

Fig. 7-217

④ Proceed to set the lever to "D" position while pushing the button.

⑤ Take your hand off the lever and button.

⑥ Try to move the lever to "2" position without pushing the button and make sure that the lever does not move to "2" position.

NOTE:

At this time, the select lever pin must be kept at the position of the guide plate as shown in the following illustration.

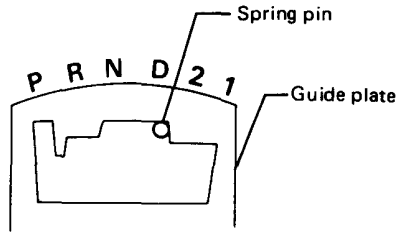

Fig. 7-218

7) Connect electric connectors for inhibitor switch and indicator illumination light.

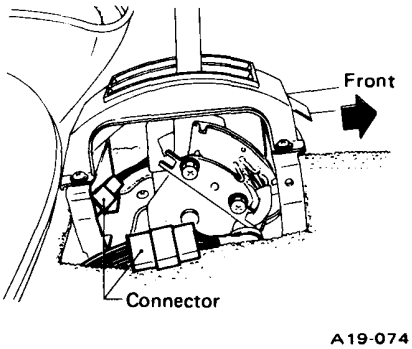

Fig. 7-219

8) Check inhibitor switch operation as follows.

a. The engine can be started with selector lever at only "N" or "P" position.

b. The reverse lamp lights with selector lever at only "R" position.

c. There must be no position between "P" and "N" positions wherein the reverse lamp is lighted, and at the same time, engine can be started.

9) Install the console box and the hand brake cover.

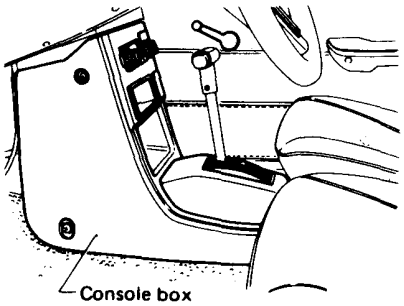

Fig. 7-220

Downloaded from www.Manualslib.com manuals search engine

7-4. Special Tools

1. Special Tools for Differential

499987100	398653600	498517000	399913601
Socket Wrench (35)	Shaft	Replacer	Master
Drive pinion	Drive pinion and reduction drive gear	Drive pinion front bearing core	Drive pinion
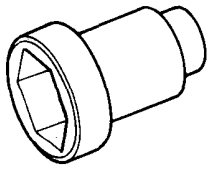 *Fig. 7-221* A13-511	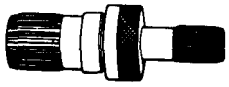 *Fig. 7-225* A13-192	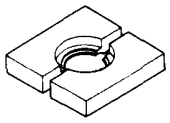 *Fig. 7-229* ST-151	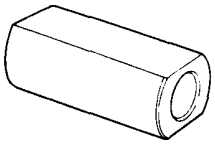 *Fig. 7-233* A13-190
499267100	398833600	498477000	399913603
Spacer	Guide	Handle	Holder
Oil seal holder	Needle bearing	Bearing cup, needle bearing, drive pinion front bearing retainer and impeller bushing.	Drive pinion
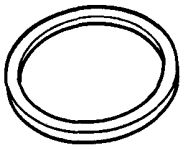 *Fig. 7-222* A13-516	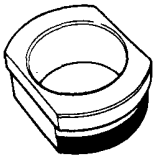 *Fig. 7-226* A13-194	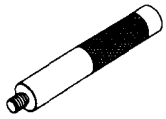 *Fig. 7-230* ST-150	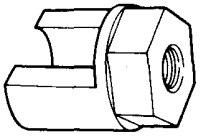 *Fig. 7-234* A13-189
499247200	399513600	399863610	399913604
Installer	Installer	Remover	Spacer
Final reduction case	Drive pinion rear bearing cup	Needle bearing	Drive pinion
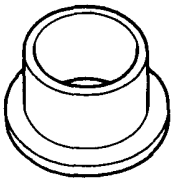 *Fig. 7-223* A13-517	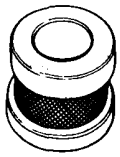 *Fig. 7-227* A13-196	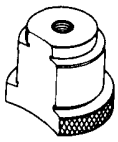 *Fig. 7-231* ST-152	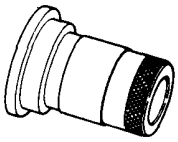 *Fig. 7-235* A13-187
398643600	398437700	499427000	499247000
Gauge	Drift	Installer	Installer
Low & reverse brake, total endplay, oil pump, drive pinion height	Drive pinion front bearing cup	Drive pinion front bearing cup, axle shaft bearing cup and thrust bearing retainer	Drive pinion oil seal
Fig. 7-224 A13-211	*Fig. 7-228* A14-046	*Fig. 7-232* A14-079	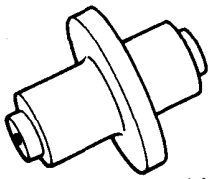 *Fig. 7-236* A13-518

Downloaded from www.Manualslib.com manuals search engine

399780111	899924100	398781600	899580100
Wrench	Handle	Stopper	Installer
Axle shaft oil seal holder	Reduction drive gear	Reduction drive gear	Drive pinion
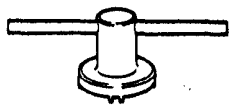 *Fig. 7-237* A12-168	*Fig. 7-241* A12-189	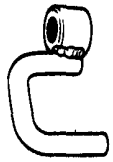 *Fig. 7-245* A12-173	*Fig. 7-249* A12-179
399790110	499897000	899524100	499937000
Installer	Pliers	Puller Set	Differential Stand
Roller bearing (Differential) Axle shaft oil seal	Snap ring	Roller bearing (Differential)	Final reduction section
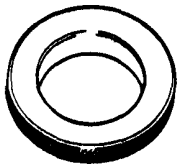 *Fig. 7-238* A12-175	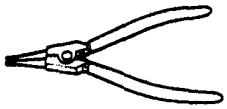 A13-519 *Fig. 7-242*	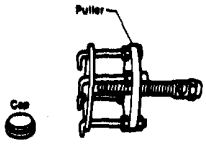 *Fig. 7-246* A5-142	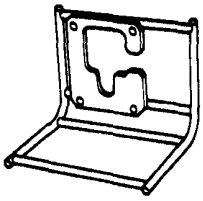 *Fig. 7-250* A13-509
499827000	498247001	399520105	499917200
Press	Magnet Base	Seat	Master 2
Speedometer shaft oil seal	Backlash of gears	Roller bearing (Differential)	Drive pinion
Fig. 7-239 ST-147	*Fig. 7-243* ST-156	*Fig. 7-247* A12-171	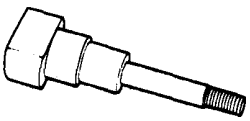 *Fig. 7-251* A13-510
899904100	498247100	399703600	498847000
Remover	Dial Gauge	Puller	Oil seal Guide
Differential case	Backlash of gears	Axle shaft bearing cup	Oil seal holder
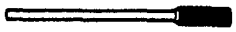 *Fig. 7-240* A12-187	*Fig. 7-244* ST-157	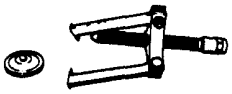 *Fig. 7-248* A13-186	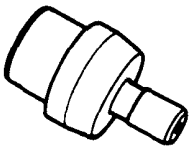 *Fig. 7-252* A13-515

Downloaded from www.Manualslib.com manuals search engine

498807000			
Bearing Guide			
Needle bearing			
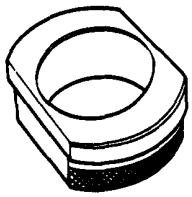 *Fig. 7-253* A13-512			
498567000			
Pulley			
Preload check			
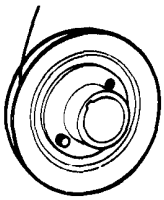 *Fig. 7-254* A13-513			
499247100			
Oil Seal Installer			
Oil seal holder			
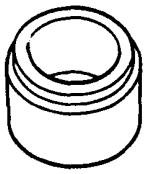 *Fig. 7-255* A13-514			

Downloaded from www.Manualslib.com manuals search engine

2. Special Tools for Transmission

398534800	398603610	399893600	499527000
Adapter 2	Socket	Plier	Puller Set
Line pressure	Brake band	Reverse clutch, forward clutch and low & reverse brake	Final reduction case
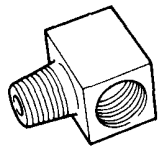 *Fig. 7-256* A13-203	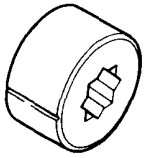 *Fig. 7-260* A13-209	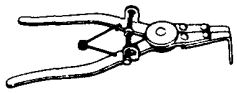 *Fig. 7-264* A13-207	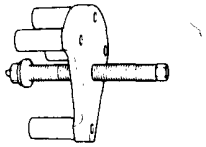 *Fig. 7-268* A13-338
398573600	498147000	499687000	499717000
Oil Pressure Gauge Assembly	Depth Gauge	Base	Remover
Line pressure and governor pressure	Low & reverse brake	Low & reverse brake	Rear shaft bearing
Fig. 7-257 A13-201	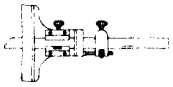 *Fig. 7-261* ST-146	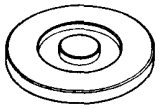 *Fig. 7-265* ST-160	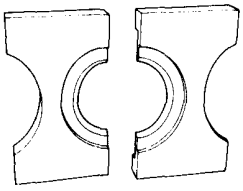 *Fig. 7-269* A13-524
398893600	398623600	499667000	398308700
Adapter	Seat	Thickness Gauge	Puller
Line pressure and governor pressure	Center support assembly	Forward clutch, reverse clutch, low & reverse brake and oil pump etc.	Transmission case oil seal
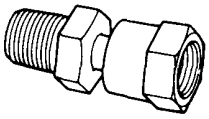 *Fig. 7-258* A13-202	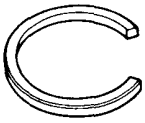 *Fig. 7-262* A13-210	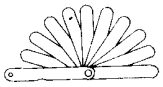 *Fig. 7-266* ST-159	*Fig. 7-270* A13-215
398663600	398673600	399793600	399248700
Plier	Compressor	Installer	Installer 2
Governor valve	Reverse clutch, forward clutch and low & reverse brake	Final reduction case	Transmission case oil seal
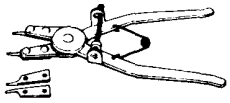 *Fig. 7-259* A13-205	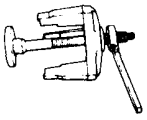 *Fig. 7-263* A13-208	*Fig. 7-267* A13-214	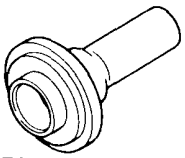 *Fig. 7-271* A13-216

Downloaded from www.Manualslib.com manuals search engine

499337000	399903600	499917300
Vernier Calliper	Remover 2	Gauge Set
Vacuum diaphragm rod selection	Needle bearing and bushing on oil pump carrier	Vacuum diaphragm rod
Fig. 7-272 ST-158	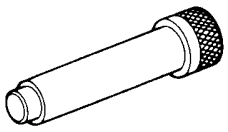 A13-217 *Fig. 7-276*	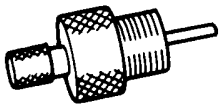 *Fig. 7-280* A13-523
498107000	498597000	
Replacer	Socket Wrench (7)	
Impeller bushing on converter housing	Plug	
Fig. 7-273 ST-155	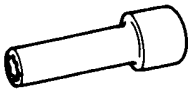 *Fig. 7-277* A13-520	
398863600	498897000	
Installer 2	Adapter	
Needle bearing on oil pump carrier	Measure the line pressure	
Fig. 7-274 A13-213	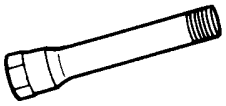 *Fig. 7-278* A13-521	
399543600	499257100	
Installer	Oil Seal Guide	
Needle bearing and bushing on oil pump carrier	Drive pinion oil seal	
Fig. 7-275 A13-212	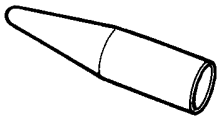 *Fig. 7-279* A13-522	

Downloaded from www.Manualslib.com manuals search engine

Downloaded from www.Manualslib.com manuals search engine

CHAPTER 8

REAR WHEEL DRIVING SYSTEM (4WD MODEL)

		Page
8–1.	SPECIFICATIONS AND SERVICE DATA	8– 2
	1. Specifications	8– 2
	2. Service Data	8– 2
8–2.	COMPONENT PARTS	8– 4
8–3.	REAR DIFFERENTIAL	8– 5
	1. Component Parts of Differential Assembly	8– 5
	2. On-car Services	8– 6
	3. Dismounting Differential Assembly	8– 7
	4. Disassembly	8– 7
	5. Inspection	8– 8
	6. Assembly	8– 9
	7. Mounting	8–13
8–4.	DRIVE SHAFT	8–15
8–5.	PROPELLER SHAFT	8–15
	1. Removal	8–15
	2. Inspection	8–15
	3. Disassembly	8–16
	4. Assembly	8–16
	5. Installation	8–16
8–6.	TROUBLESHOOTING	8–17
	1. Rear Differential	8–17
	2. Propeller Shaft	8–18
8–7.	SPECIAL TOOLS	8–19

8

SUBARU

Downloaded from www.Manualslib.com manuals search engine

8-1. Specifications and Service Data

1. Specifications

		Tooth number of gear	Gear ratio	Type of gear
Rear reduction gear	Final	39/10	3.900	Hypoid
Rear differential	Side gear	16		Straight bevel gear
	Pinion gear	10		

		Hatchback	Station Wagon and Brat
Propeller shaft	Type	2-joint type	
	Distance between joints	1,057 mm (41.61 in)	1,136 mm (44.72 in)
	Tube outer diameter x tube thickness	63.5 x 1.6 mm (2.500 x 0.063 in)	68.9 x 1.6 mm (2.713 x 0.063 in)

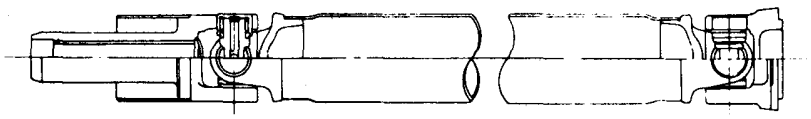

A14-040

Fig. 8-1 Construction of propeller shaft

2. Service Data

Rear differential	Front & rear bearing preload at companion flange bolt hole	New bearing	19.6 – 28.4 N (2.0 – 2.9 kg, 4.4 – 6.4 lb)
		Used bearing	8.34 – 16.67 N (0.85 – 1.7 kg, 1.87 – 3.75 lb)
	Preload adjusting washer length	Part No.	
		383705200	2.59 mm (0.1020 in)
		383715200	2.57 mm (0.1012 in)
		383725200	2.55 mm (0.1004 in)
		383735200	2.53 mm (0.0996 in)
		383745200	2.51 mm (0.0988 in)
		383755200	2.49 mm (0.0980 in)
		383765200	2.47 mm (0.0972 in)
		383775200	2.45 mm (0.0965 in)
		383785200	2.43 mm (0.0957 in)
		383795200	2.41 mm (0.0949 in)
		383805200	2.39 mm (0.0941 in)
		383815200	2.37 mm (0.0933 in)
		383825200	2.35 mm (0.0925 in)
		383835200	2.33 mm (0.0917 in)
		383845200	2.31 mm (0.0909 in)
	Preload adjusting spacer length	Part No.	
		383695201	56.2 mm (2.213 in)
		383695202	56.4 mm (2.220 in)
		383695203	56.6 mm (2.228 in)
		383695204	56.8 mm (2.236 in)
		383695205	57.0 mm (2.244 in)
		383695206	57.2 mm (2.252 in)

Downloaded from www.Manualslib.com manuals search engine

Rear differential (continued)	Pinion height adjusting washer thickness	Part No.	
		383495200	3.09 mm (0.1217 in)
		383505200	3.12 mm (0.1228 in)
		383515200	3.15 mm (0.1240 in)
		383525200	3.18 mm (0.1252 in)
		383535200	3.21 mm (0.1264 in)
		383545200	3.24 mm (0.1276 in)
		383555200	3.27 mm (0.1287 in)
		383565200	3.30 mm (0.1299 in)
		383575200	3.33 mm (0.1311 in)
		383585200	3.36 mm (0.1323 in)
		383595200	3.39 mm (0.1335 in)
		383605200	3.42 mm (0.1346 in)
		383615200	3.45 mm (0.1358 in)
		383625200	3.48 mm (0.1370 in)
		383635200	3.51 mm (0.1382 in)
		383645200	3.54 mm (0.1394 in)
		383655200	3.57 mm (0.1406 in)
		383665200	3.60 mm (0.1417 in)
		383675200	3.63 mm (0.1429 in)
		383685200	3.66 mm (0.1441 in)
	Side gear to thrust washer clearance		0.1 – 0.2 mm (0.004 – 0.008 in)
	Side gear thrust washer thickness	Part No.	
		383445201	0.75 – 0.80 mm (0.0295 – 0.0315 in)
		383445202	0.80 – 0.85 mm (0.0315 – 0.0335 in)
		383445203	0.85 – 0.90 mm (0.0335 – 0.0354 in)
	Side bearing standard width		20.00 mm (0.7874 in)
	Side bearing retainer shim thickness	Part No.	
		383475201	0.20 mm (0.0079 in)
		383475202	0.25 mm (0.0098 in)
		383475203	0.30 mm (0.0118 in)
		383475204	0.40 mm (0.0157 in)
		383475205	0.50 mm (0.0197 in)
	Drive gear to drive pinion backlash		0.10 – 0.20 mm (0.0039 – 0.0079 in)
	Drive gear runout on its back surface	Limit	0.05 mm (0.0020 in)
	Oil capacity		0.8 ℓ (1.7 US pt, 1.4 Imp pt)
Propeller shaft	Tube runout	Limit	0.6 mm (0.024 in)
	Joint bending resistance	Maximum	1.5 N·m (15 kg-cm, 13 in-lb)
	Axial play of journal		0.02 mm (0.0008 in) or less
	Axial play adjusting snap ring thickness		
	Part No.	Paint color	
	622033000	White	2.00 ± 0.01 mm (0.0787 ± 0.0004 in)
	622033010	Yellow	2.02 ± 0.01 mm (0.0795 ± 0.0004 in)
	622033020	Red	2.04 ± 0.01 mm (0.0803 ± 0.0004 in)
	622033030	Green	2.06 ± 0.01 mm (0.0811 ± 0.0004 in)
	622033040	Blue	2.08 ± 0.01 mm (0.0819 ± 0.0004 in)
	622033050	Light Brown	2.10 ± 0.01 mm (0.0827 ± 0.0004 in)
	622033060	No paint	2.12 ± 0.01 mm (0.0835 ± 0.0004 in)
	622033070	Pink	2.14 ± 0.01 mm (0.0843 ± 0.0004 in)

Downloaded from www.Manualslib.com-manuals search engine

8-2. Component Parts

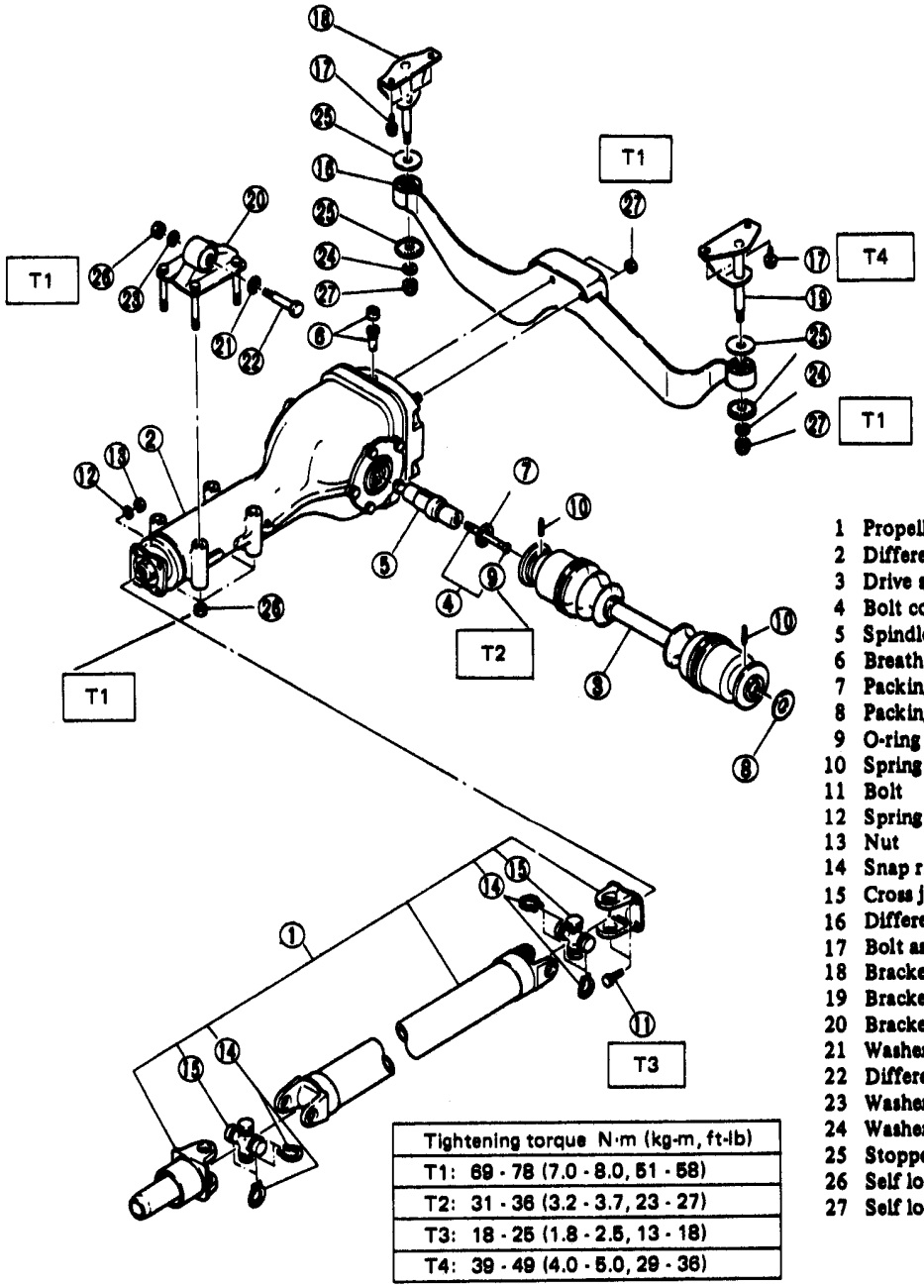

1 Propeller shaft assembly
2 Differential assembly
3 Drive shaft (R) assembly
4 Bolt compl.
5 Spindle
6 Breather cap
7 Packing
8 Packing
9 O-ring
10 Spring pin
11 Bolt
12 Spring washer
13 Nut
14 Snap ring
15 Cross joint assembly
16 Differential mount member assembly
17 Bolt assembly
18 Bracket compl. (R.H.)
19 Bracket compl. (L.H.)
20 Bracket assembly (F)
21 Washer
22 Differential mount bolt
23 Washer
24 Washer
25 Stopper
26 Self lock nut
27 Self lock nut

Tightening torque N·m (kg-m, ft-lb)
T1: 69 - 78 (7.0 - 8.0, 51 - 58)
T2: 31 - 36 (3.2 - 3.7, 23 - 27)
T3: 18 - 25 (1.8 - 2.5, 13 - 18)
T4: 39 - 49 (4.0 - 5.0, 29 - 36)

Fig. 8-2 Construction of rear drive system

Downloaded from www.Manualslib.com manuals search engine

8-3. Rear Differential

1. Component Parts of Differential Assembly

*Selective parts

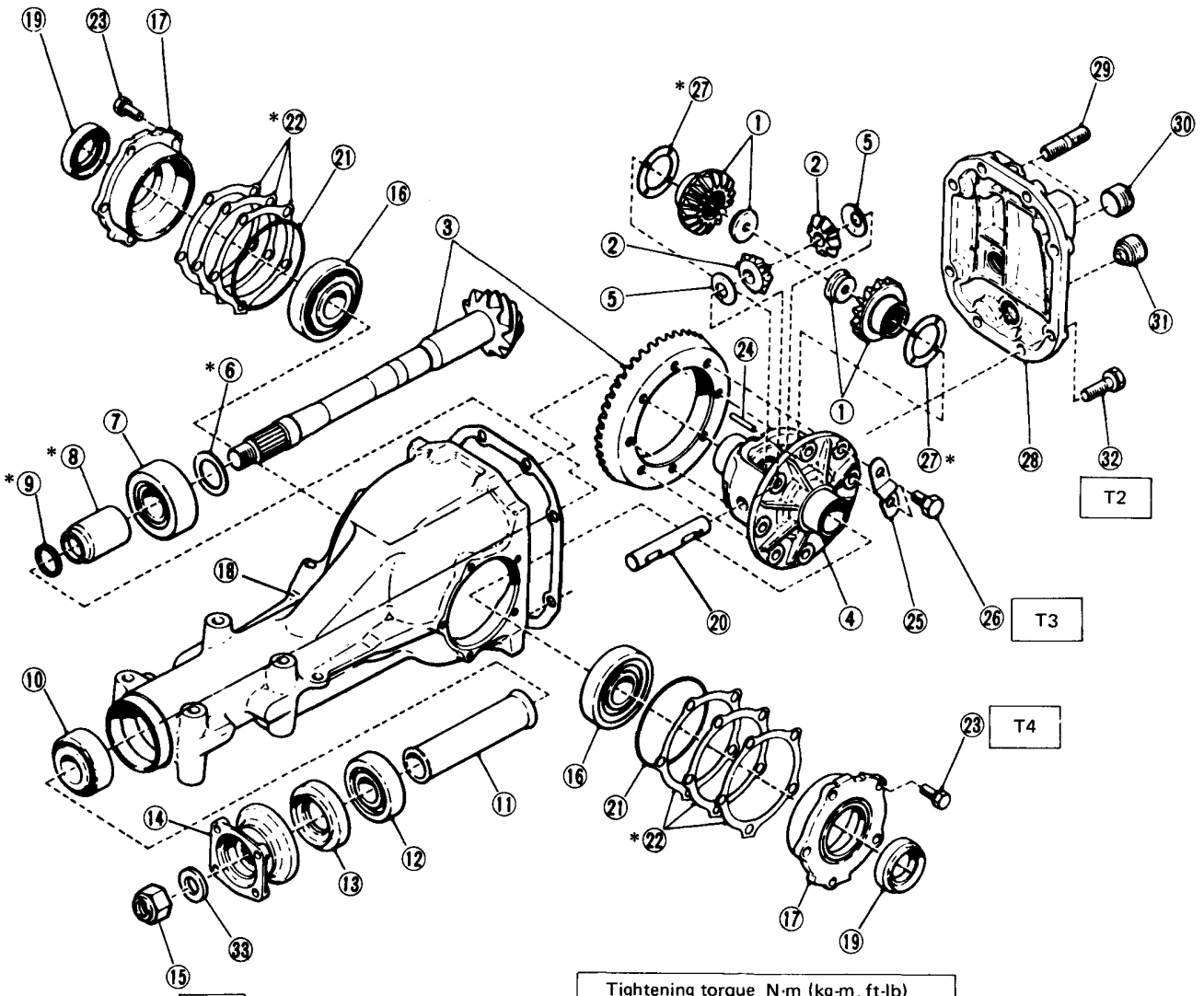

• Stake the pinion nut after tightening

Tightening torque N·m (kg-m, ft-lb)
T1: 167 - 196 (17.0 - 20.0, 123 - 145)
T2: 19 - 25 (1.9 - 2.6, 14 - 19)
T3: 69 - 78 (7.0 - 8.0, 51 - 58)
T4: 9 - 12 (0.9 - 1.2, 6.5 - 8.7)

A14-098

1 Side gear
2 Pinion mate gear
3 Pinion crown gear set
4 Differential carrier
5 Pinion mate gear washer
*6 Pinion height adjusting washer
7 Rear bearing
*8 Bearing preload adjusting spacer
*9 Bearing preload adjusting washer
10 Front bearing
11 Spacer
12 Pilot bearing
13 Front oil seal
14 Companion flange
15 Drive pinion nut
16 Side bearing
17 Side bearing retainer
18 Differential case
19 Side oil seal
20 Pinion mate shaft
21 Side bearing retainer O-ring
*22 Side bearing retainer shim
23 Bolt (8x20x14 mm)
24 Pinion shaft lock pin
25 Lock plate
26 Bolt (10x20x12 mm)
*27 Side gear thrust washer
28 Rear cover
29 Stud bolt
30 Plug
31 Plug cp.
32 Bolt (10x30x18 mm)
33 Washer

Fig. 8-3 Component parts of differential assembly

Downloaded from www.Manualslib.com manuals search engine

2. On-car Services

1) Replacing Front Oil Seal

a. Drain gear oil
b. Jack up rear wheels and support the vehicle body with rigid racks.
c. Detach propeller shaft from companion flange.
d. Measure turning resistance of companion flange.

NOTE:
Measure turning resistance after making sure that the companion flange turns smoothly.

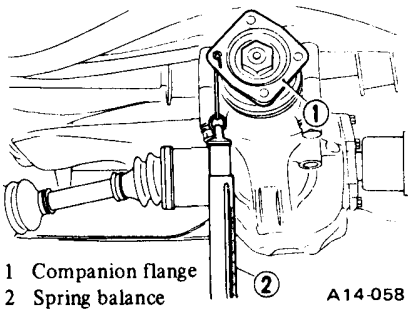

Fig. 8-4 Measuring turning resistance of companion flange

e. Remove drive pinion nut while holding companion flange with Flange Wrench (398427700).

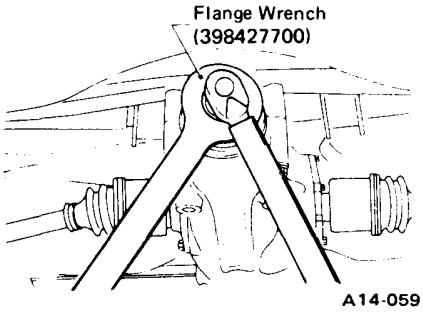

Fig. 8-5 Removing drive pinion nut

f. Extract companion flange with a puller.

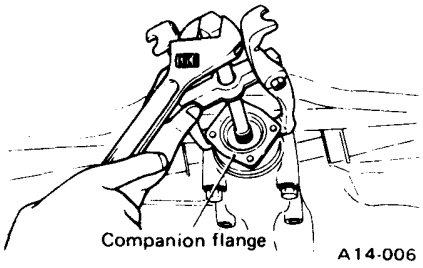

Fig. 8-6 Removing companion flange

g. Remove oil seal.

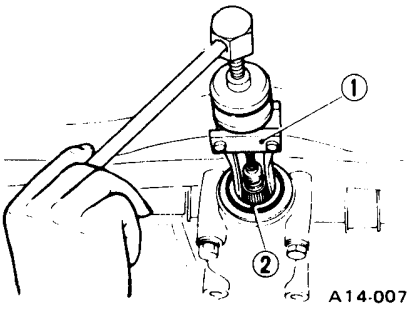

1 Puller Assembly (398527700)
2 Oil seal

Fig. 8-7 Removing oil seal

h. Fit a new oil seal.

NOTE:
Apply chassis grease between the oil seal lips.

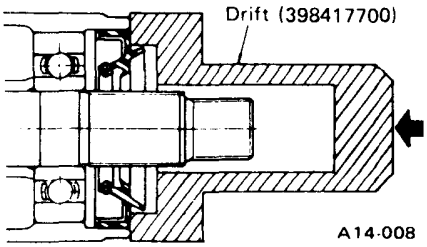

Fig. 8-8 Fitting oil seal

i. Install companion flange.
j. Tighten drive pinion nut within the specified torque range so that the turning resistance of companion flange becomes the same as that before replacing oil seal.

Torque (Drive pinion nut)	167 – 196 N·m (17.0 – 20.0 kg-m, 123 – 145 ft-lb)

k. Reassembling procedure hereafter is the reverse of the disassembling.

NOTE:
Stake drive pinion nut after tightening.

2) Replacing Side Oil Seal

a. Remove two bolts which fix the upper portion of shock absorber to the body in unladen condition.
b. Loosen both wheel nuts.
c. Jack up the vehicle and support it with rigid racks.
d. Remove wheels.
e. Drive out spring pins of inner and outer D.O.J.s by using 6 mm (0.24 in) diameter of steel rod.

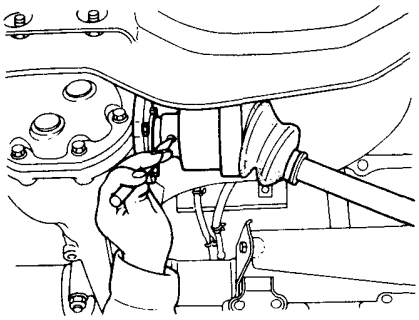

Fig. 8-9 Driving spring pins out

f. Detach outer D.O.J. from spindle of trailing arm with trailing arm lowered fully and detach inner D.O.J. from differential spindle and then remove drive shaft assembly.
g. Loosen differential spindle set bolt by using Wrench (925560000) and remove spindle with packing.
h. Remove oil seal.

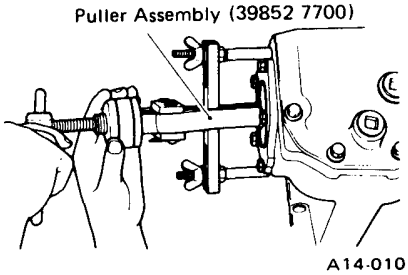

Fig. 8-10 Removing oil seal

i. Drive in a new oil seal with Drift (398437700).

NOTE:
Apply chassis grease between the oil seal lips.

j. Reassembling procedure hereafter is the reverse of the disassembly.

Downloaded from www.Manualslib.com manuals search engine

3. Dismounting Differential Assembly

a. to f.
Follow the same steps as those for "2. 2) Replacing Side Oil Seal."
g. Remove propeller shaft assembly.

NOTE:
a. Prepare an oil can and cap since the mission oil flows out from the extension at removing propeller shaft assembly.
b. When removing propeller shaft assembly, pay attention not to damage the sliding surfaces of rear drive shaft (extension) spline, oil seal and sleeve yoke.
c. Insert the cap into the extension to prevent mission oil from flowing out immediately after removing the propeller shaft assembly.

h. Support differential assembly with jack and remove two nuts at the center of differential mount member assembly.
i. Remove four nuts fixing differential assembly to bracket assembly (F).
j. Dismount differential assembly by lowering jack.

4. Disassembly

1) Inspection before disassembling
To detect real cause of trouble, inspect on the following items before disassembling.
(Refer to "6. Assembly" for inspection procedures.)

a. Tooth contact of hypoid drive gear and pinion, and backlash.
b. Runout of drive gear at its back surface.
c. Turning resistance of drive pinion.

2) Disassembling
a. Set Attachment (398217700) on vise and install the differential assembly to Attachment.

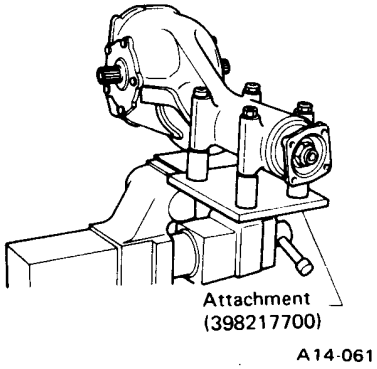

Fig. 8-11 Installing differential

b. Drain gear oil by removing plug.
c. Remove spindles by loosening bolts with Wrench (925560000).
d. Remove rear cover by loosening retaining bolts.

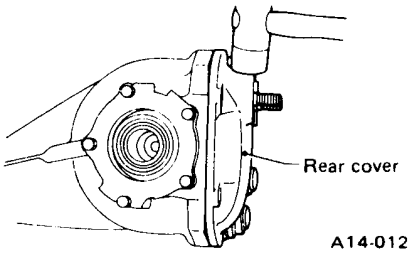

Fig. 8-12 Removing rear cover

e. Mark right and left side bearing retainers in order to identify them at reassembly. Remove side bearing retainer attaching bolts, set Attachment (398457700) to differential carrier, and extract right and left side bearing retainers with a puller.

NOTE:
Each shim, which is installed to adjust the side bearing preload, should be kept together with its mating retainer.

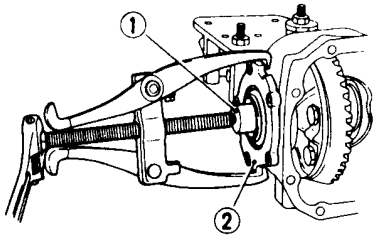

1 Attachment (398457700)
2 Side bearing retainer

Fig. 8-13 Removing side bearing retainer

f. Pull out differential carrier.

NOTE:
Be careful not to permit the teeth to contact with the case.

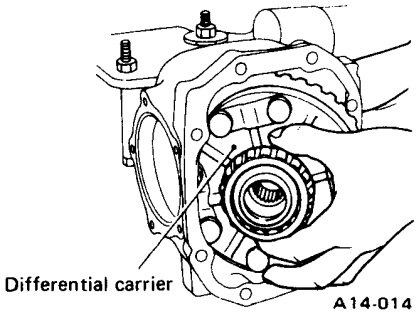

Fig. 8-14 Removing drive gear

g. When replacing side bearing, pull bearing cup from side bearing retainer.

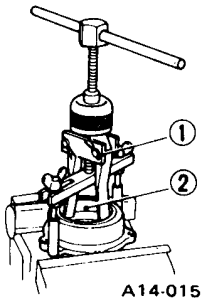

1 Puller Assembly (398527700)
2 Bearing cup

Fig. 8-15 Removing side bearing cup

h. Extract bearing cone with Puller Set (399527700).

NOTE:
a. Set Puller so that its claws catch the edge of the bearing cone.
b. Never mix up the right and left hand bearing cups and cones.
Do not attempt to disassemble the parts unless necessary.

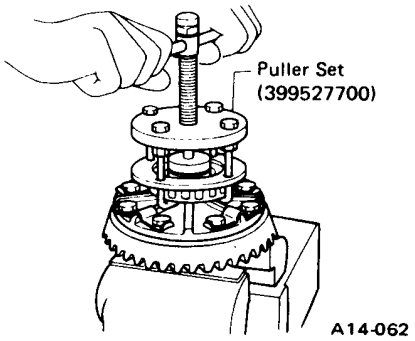

Fig. 8-16 Removing side bearing cone

Downloaded from www.Manualslib.com manuals search engine

i. Remove drive gear by spreading lock plates and loosening drive gear bolts.

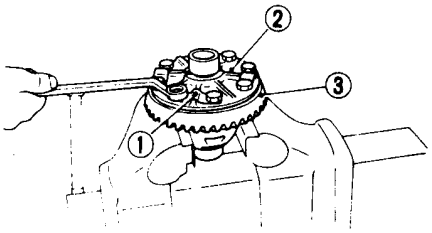

1 Lock plate
2 Differential carrier
3 Drive gear

A14-017

Fig. 8-17 Removing drive gear

j. Drive out pinion shaft lock pin from drive gear side.

NOTE:
The lock pin is staked at the pin hole end on the differential case; do not drive it out forcibly before unstaking it.

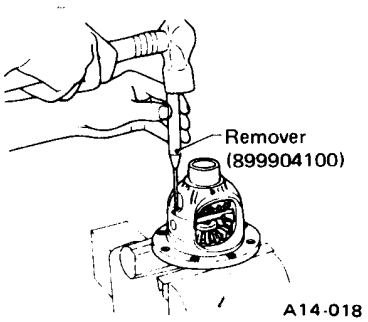

A14-018

Fig. 8-18 Driving out lock pin

k. Draw out pinion mate shaft and remove pinion mate gears, side gears and thrust washers.

NOTE:
The gears as well as thrust washers should be marked or kept separated left and right, and front and rear.

l. Hold companion flange with Flange Wrench (398427700) and remove drive pinion nut.
m. Extract the companion flange with a puller.
n. Press the end of drive pinion shaft and extract it together with rear bearing cone, preload adjusting spacer and washer.

NOTE:
Hold the drive pinion so as not to drop it.

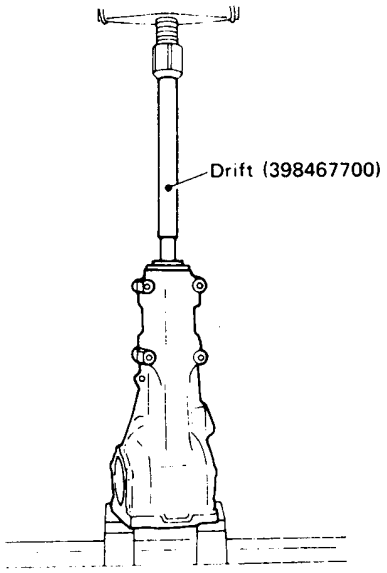

A14-019

Fig. 8-19 Removing drive pinion

o. Remove rear bearing cone from drive pinion by supporting cone with Replacer (398517700).

NOTE:
Place the replacer so that its center-recessed side faces the pinion gear.

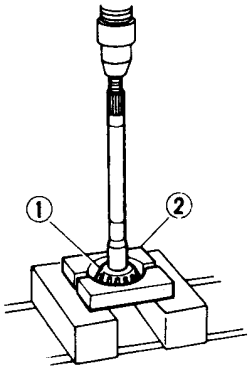

A14-063

1 Rear bearing cone
2 Replacer (398517700)

Fig. 8-20 Removing rear bearing cone

p. Remove front oil seal from differential case.
q. Remove pilot bearing together with front bearing cone.

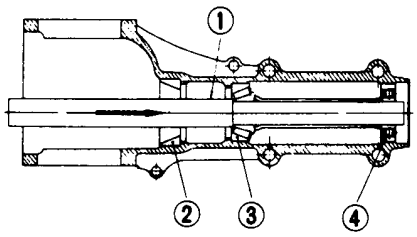

A14-021

1 Drift (398467700)
2 Rear bearing cup
3 Front bearing
4 Pilot bearing

Fig. 8-21 Removing pilot bearing

r. When replacing bearings, tap front bearing cup and rear bearing cup in this order out of case by using a brass bar.

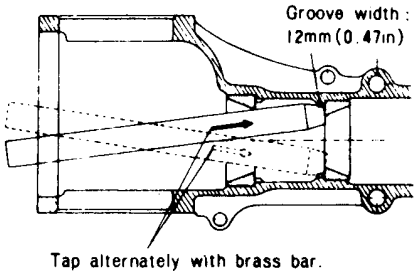

A14-022

Fig. 8-22 Removing cups of front and rear bearing

5. Inspection

Wash all the disassembled parts clean, and examine them for wear, damage, or other defects. Repair or replace defective parts as necessary.

1) Drive gear and drive pinion

a. If abnormal tooth contact is evident, find out the cause and adjust to give correct tooth contact at assembly. Replace the gear if excessively worn or incapable of adjustment.
b. If crack, score, or seizure is evident, replace as a set. Slight damage of tooth can be corrected by oil stone or the like.

2) Side gear and pinion mate gear

a. Replace if crack, score, or other defects are evident on tooth surface.
b. Replace if thrust washer contacting surface is worn or seized. Slight damage of the surface can be corrected by oil stone or the like.

Downloaded from www.Manualslib.com manuals search engine

3) Bearing

Replace if seizure, peeling, wear, rust, dragging during rotation, abnormal noise or other defect is evident.

4) Thrust washers of side gear and pinion mate gear

Replace if seizure, flaw, abnormal wear or other defect is evident.

5) Oil seal

Replace if deformed or damaged, and at every disassembling.

6) Differential case

Replace if the bearing bores are worn or damaged.

7) Differential carrier

Replace if its sliding surfaces are worn or cracked.

8) Companion flange

Replace if the oil seal lip contacting surfaces have flaws.

6. Assembly

1) Precautions for assembling

a. Assemble in the reverse order of disassembling.
Check and adjust each part during assembly.

b. Keep the shims and washers in order, so that they are not misinstalled.

c. Thoroughly clean the surfaces on which the shims, washers and bearings are to be installed.

d. Apply gear oil when installing the bearings and thrust washers.

e. Be careful not to mix up the right and left hand cups of the bearings.

f. Replace the oil seal with new one at every disassembly. Apply chassis grease between the lips (*) when installing the oil seal.

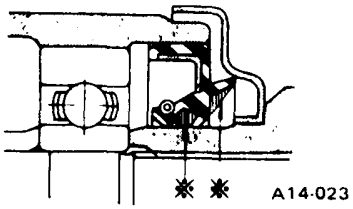

Fig. 8-23 Applying grease to oil seal

2) Adjusting preload for front and rear bearings.

Adjust the bearing preload with spacer and washer between front and rear bearings. Pinion height adjusting washer has nothing to do with this adjustment. The adjustment must be carried out without oil seal.

a. Press front and rear bearing cups into differential case.

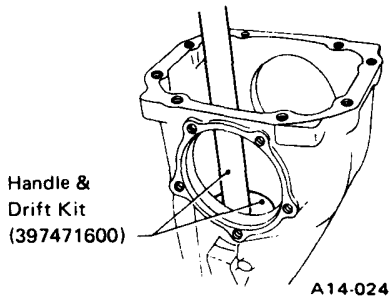

Fig. 8-24 Installing bearing cup

b. Insert Dummy Shaft (398507702) with pinion height adjusting washer and rear bearing cone fitted on it into case.

NOTE:
Reuse the used washer if they show normal tooth contact pattern when checked before disassembly.

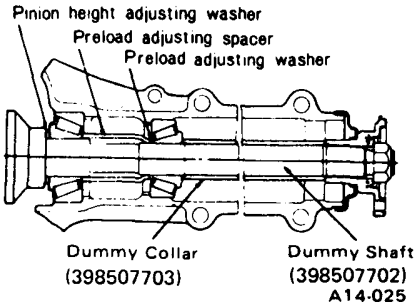

Fig. 8-25 Installing Dummy Shaft

c. Then, install preload adjusting spacer and washer, front bearing cone, Dummy Collar (398507703), companion flange, washer and drive pinion nut.

d. Turn Dummy Shaft with hand to make it seated, and tighten drive pinion nut while measuring the preload with spring balance as shown in the figure. Select preload adjusting washer and spacer so that the specified preload is obtained when nut is tightened to the specified torque.

NOTE:
a. Be careful not to give excessive preload.
b. When tightening the drive pinion nut, lock Dummy Shaft with Block (398507704) as illustrated here.

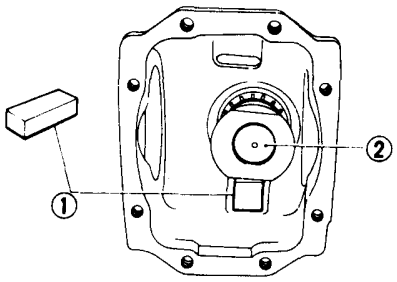

1 Block (398507704)
2 Dummy shaft (398507702)

Fig. 8-26

Torque (Drive pinion nut)	167 – 196 N·m (17.0 – 20.0 kg-m, 123 – 145 ft-lb)

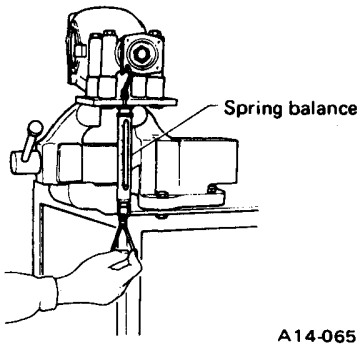

Fig. 8-27 Measuring preload

Front & rear bearing preload
For new bearing: 19.6 – 28.4 N (2.0 – 2.9 kg, 4.4 – 6.4 lb) at companion flange bolt hole
For used bearing: 8.34 – 16.67 N (0.85 – 1.7 kg, 1.87 – 3.75 lb) at companion flange bolt hole

Downloaded from www.Manualslib.com manuals search engine

Preload adjusting washer

Part No.	Length mm (in)
383705200	2.59 (0.1020)
383715200	2.57 (0.1012)
383725200	2.55 (0.1004)
383735200	2.53 (0.0996)
383745200	2.51 (0.0988)
383755200	2.49 (0.0980)
383765200	2.47 (0.0972)
383775200	2.45 (0.0965)
383785200	2.43 (0.0957)
383795200	2.41 (0.0949)
383805200	2.39 (0.0941)
383815200	2.37 (0.0933)
383825200	2.35 (0.0925)
383835200	2.33 (0.0917)
383845200	2.31 (0.0909)

Preload adjusting spacer

Part No.	Length mm (in)
383695201	56.2 (2.213)
383695202	56.4 (2.220)
383695203	56.6 (2.228)
383695204	56.8 (2.236)
383695205	57.0 (2.244)
383695206	57.2 (2.252)

3) Adjusting drive pinion height

Adjust drive pinion height with washer installed between rear bearing cone and the back of pinion gear.

a. Install Dummy Shaft, Collar and Gauge, as shown in the figure and apply the specified preload on the bearings. (Refer to 2) Adjusting preload for front and rear bearings.)

NOTE:
At this time, install a pinion height adjusting washer which is temporarily selected or the same as that used before.

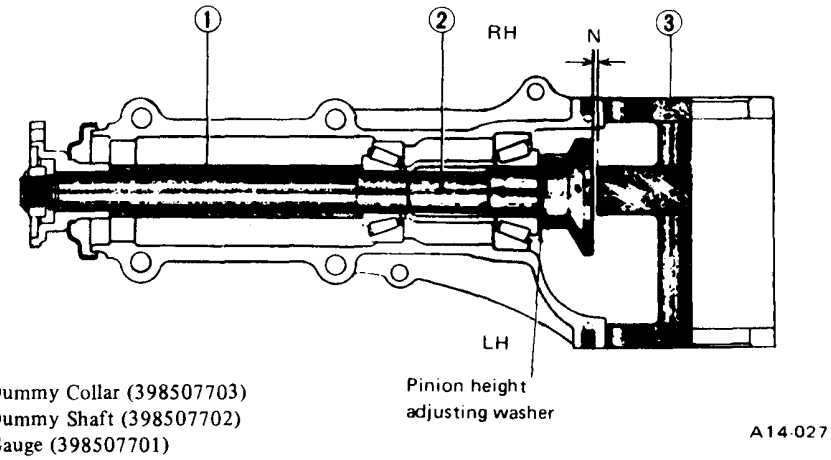

1. Dummy Collar (398507703)
2 Dummy Shaft (398507702)
3 Gauge (398507701)

Fig. 8-28 Installation of Dummy Shaft, Dummy Collar and Gauge

b. Measure the clearance N between the end of Gauge and the end surface of Dummy Shaft by using a thickness gauge.

NOTE:
Make sure that there is no clearance between the case and Gauge.

c. Obtain the thickness of pinion height adjusting washer to be inserted from the following formula and replace the temporarily installed washer with this one.

$$T = To + N - (H \times 0.01) - 0.20 \text{ (mm)},$$

where

T = Thickness of pinion height adjusting washer (mm)
To = Thickness of washer temporarily inserted (mm)
N = Reading of thickness gauge (mm)
H = Figure marked on drive pinion head

(Example of calculation)

To = 2.20 + 1.20 = 3.40 mm
N = 0.23 mm H = +1,
T = 3.40 + 0.23 − 0.01 −0.20 = 3.42

Result : Thickness = 3.42 mm
Therefore use the washer 383605200

Pinion height adjusting washers

Part No.	Thickness mm (in)
383495200	3.09 (0.1217)
383505200	3.12 (0.1228)
383515200	3.15 (0.1240)
383525200	3.18 (0.1252)
383535200	3.21 (0.1264)
383545200	3.24 (0.1276)
383555200	3.27 (0.1287)
383565200	3.30 (0.1299)
383575200	3.33 (0.1311)
383585200	3.36 (0.1323)
383595200	3.39 (0.1335)
383605200	3.42 (0.1346)
383615200	3.45 (0.1358)
383625200	3.48 (0.1370)
383635200	3.51 (0.1382)
383645200	3.54 (0.1394)
383655200	3.57 (0.1406)
383665200	3.60 (0.1417)
383675200	3.63 (0.1429)
383685200	3.66 (0.1441)

4) Install the selected pinion height adjusting washer on drive pinion, and press the rear bearing cone into position with Installer (398177700).

Downloaded from www.Manualslib.com manuals search engine

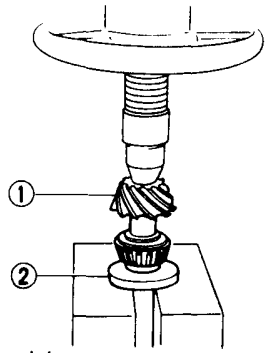

1 Drive pinion
2 Installer (398177700)
A14-066

Fig. 8-29 Installing rear bearing cone

5) Insert drive pinion into differential case, install the previously selected preload adjusting spacer and washer.

6) Press-fit front bearing cone into case.

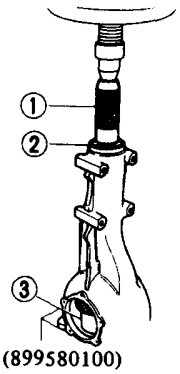

1 Installer (899580100)
2 Dummy collar (398507703)
3 Weight (399780104)
A14-067

Fig. 8-30 Installing front bearing cone

7) Insert spacer, then press-fit pilot bearing with Weight (399780104) and Installer (899580100).

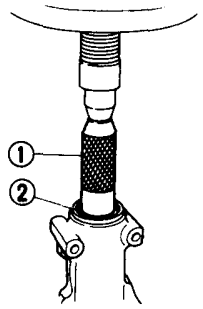

1 Installer (899580100)
2 Pilot bearing
A14-068

Fig. 8-31 Installing pilot bearing

8) Fit a new oil seal with Drift (398417700).

NOTE:
Apply grease between the oil seal lips. (Refer to 1) Precautions for assembling)

9) Press-fit companion flange with Installer (899874100) and Weight (399780104).

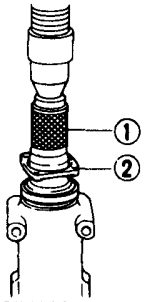

1 Installer (899874100)
2 Companion flange
A14-069

Fig. 8-32 Installing companion flange

10) Install drive pinion nut with washer.

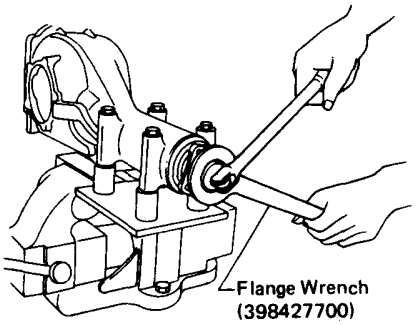

A14-092

Fig. 8-33 Tightening drive pinion nut

Torque (Drive pinion nut)	167 – 196 N·m (17.0 – 20.0 kg-m, 123 – 145 ft-lb)

11) Assembling differential carrier

Install side gears and pinion mate gears, with their thrust washers and pinion mate shaft, into differential carrier.

NOTE:
Apply gear oil on both sides of the washer and on the side gear shaft before installing.
Insert the pinion mate shaft into the differential carrier by aligning the lock pin holes.

a. Measure the clearance between differential carrier and the back of side gear.
b. Adjust the clearance as specified by selecting side gear thrust washer.

Side gear back clearance	0.1 – 0.2 mm (0.004 – 0.008 in)

Side gear thrust washer

Part No.	Thickness mm (in)
383445201	0.75 – 0.80 (0.0295 – 0.0315)
383445202	0.80 – 0.85 (0.0315 – 0.0335)
383445203	(0.85 – 0.90 (0.0335 – 0.0354)

c. Check the condition of rotation after applying oil to the gear tooth surfaces and thrust surfaces.
d. After driving in pinion shaft lock pin, stake the both sides of the hole to prevent pin from falling off.
e. Install drive gear on differential carrier, and bend lock plate.

Torque (Drive gear bolt)	69 – 78 N·m (7.0 – 8.0 kg-m, 51 – 58 ft-lb)

NOTE:
Tighten diagonally while tapping the bolt heads.

12) Before installing side bearing, measure the bearing width by using a dial gauge, Weight (398227700) and Gauge (398237700).

Standard bearing width	20.00 mm (0.7874 in)

Downloaded from www.Manualslib.com manuals search engine

NOTE:
Set the dial gauge needle to zero, using a standard bearing or block of specified height in advance.

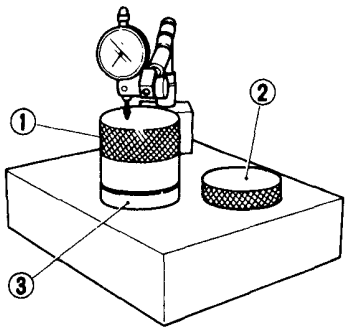

1 Weight (398227700)
2 Gauge (398237700)
3 Side bearing

A14-071

Fig. 8-34 Measuring side bearing width

13) Press side bearing cone onto differential carrier with Drift (398487700) and Adapter (398497701) included in Puller Set (399527700).

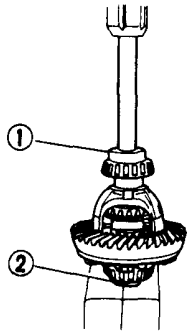

1 Drift (398487700)
2 Adapter (398497701)

A14-072

Fig. 8-35 Installing side bearing

14) Adjusting side bearing retainer shims

a. The drive gear backlash and side bearing preload can be determined by the side bearing retainer shim thickness.
b. When replacing differential carrier, differential case, side bearing, and side bearing retainer, obtain the right and left retainer shim thickness from the following formulas.

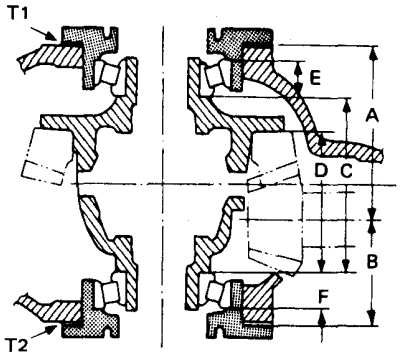

A14-073

Fig. 8-36 Adjustment of side bearing retainer shim

T_1 (Left) = $(A + C + G_1 - D) \times 0.01 + 0.76 - E$ (mm)

T_2 (Right) = $(B + D + G_2) \times 0.01 + 0.76 - F$ (mm)

T_1 & T_2 : Thickness of left and right side bearing retainer shim (mm)

A & B : Number marked on differential case.

C & D : Number marked on differential carrier.

E & F : Difference of width of left and right side bearing from standard width 20.0 mm, expressed in a unit of 0.01 mm.
For example, if the bearing measured width is 19.89 mm, value of E or F is as follows. 20.00 − 19.89 = 0.11 (E or F)

G_1 & G_2 : Number marked on side bearing retainer.

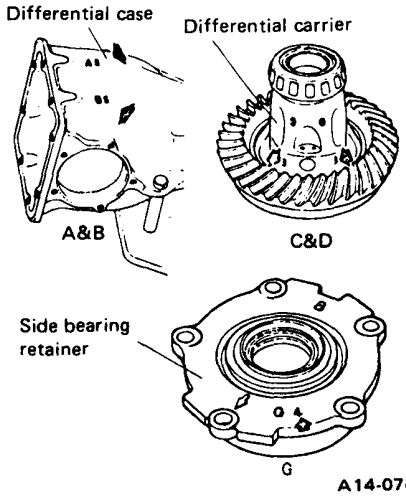

A14-074

Fig. 8-37 Location of markings

If a number is not marked, regard it as zero.

NOTE:
Use several shims to obtain the calculated thickness.

Side bearing retainer shims

Part No.	Thickness mm (in)
383475201	0.20 (0.0079)
383475202	0.25 (0.0098)
383475203	0.30 (0.0118)
383475204	0.40 (0.0157)
383475205	0.50 (0.0197)

Example of calculation

Ex. 1
A = 5, B = 5, C = 3, D = 3,
G_1 = 4, G_2 = 1, E = 0.10 mm
F = 0.15 mm

Left side
$T_1 = (A+C+G_1-D) \times 0.01+0.76-E$
$= (5+3+4-3) \times 0.01+0.76-0.10$
$= 0.09+0.76-0.10$
$= 0.75$ mm

The correct shims are as follows

Thickness		Q'ty	
0.25	x	1	= 0.25
0.50	x	1	= 0.50

Total shim thickness = 0.75 mm

Right side
$T_2 = (B+D+G_2) \times 0.01+0.76-F$
$= (5+3+1) \times 0.01+0.76-0.15$
$= 0.09+0.76-0.15$
$= 0.70$ mm

The correct shims are as follows

Thickness		Q'ty	
0.20	x	1	= 0.20
0.50	x	1	= 0.50

Total shim thickness = 0.70mm

Ex. 2
A = 2, B = 3, C = 0, D = 3, G_1 = 2,
G_2 = 3, E = 0.22 mm,
F = 0.10 mm

Left side
$T_1 = (A+C+G_1-D) \times 0.01+0.76-E$
$= (2+0+2-3) \times 0.01+0.76-0.22$
$= 0.01+0.76-0.22$
$= 0.55$ mm

The correct shims are as follows

Thickness		Q'ty	
0.25	x	1	= 0.25
0.30	x	1	= 0.30

Total shim thickness = 0.55 mm

Downloaded from www.Manualslib.com manuals search engine

Right side

$T_2 = (B+D+G_2)x0.01+0.76-F$
$= (3+3+3)x0.01+0.76-0.10$
$= 0.09+0.76-0.10$
$= 0.75$ mm

The correct shims are as follows

Thickness		Q'ty	
0.25	x	1	= 0.25
0.50	x	1	= 0.50

Total shim thickness = 0.75 mm

c. Install the differential carrier assembly into differential case in the reverse order of disassembling.
d. Fit the selected shims and O-ring on side bearing retainer and install them on differential case with the arrow mark on the retainer directed as shown in Figure.

NOTE:
Be careful that side bearing cup is not damaged by bearing roller.

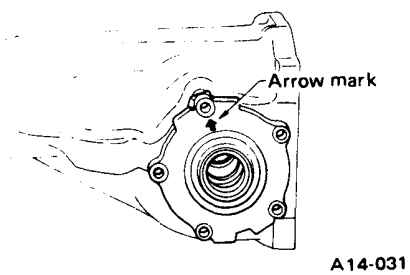

Fig. 8-38 Arrow mark on side bearing retainer

e. Tighten side bearing retainer bolts.

Torque (Side bearing retainer)	9 – 12 N·m (0.9 – 1.2 kg-m, 6.5 – 8.7 ft-lb)

f. Measure the drive gear-to-drive pinion backlash.
If the reading is not within the specified range, correct by decreasing the shim thickness on one side and increasing the shim thickness on the other side the same amount. Total shim thickness must be the same to maintain proper preload.

Backlash	0.10 – 0.20 mm (0.0039 – 0.0079 in)

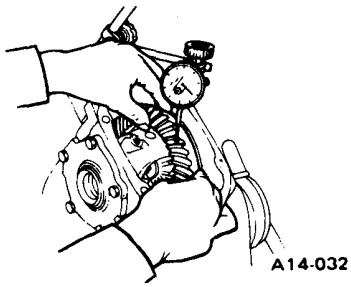

Fig. 8-39 Measuring backlash

g. At the same time, measure the turning resistance of drive pinion. Compared with the resistance when differential carrier is not installed, if the increase of the resistance is not within the specified range, readjust side bearing retainer shims.

Turning resistance increase	0.1 – 0.6 N·m (1 – 6 kg-cm, 0.9 – 5.2 in-lb)

h. Recheck drive gear-to-pinion backlash after readjusting shims.
i. Check the drive gear runout on its back surface, and make sure pinion and drive gear rotate smoothly.

Limit of runout	0.05 mm (0.0020 in)

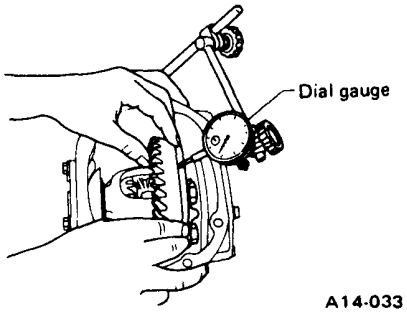

Fig. 8-40 Measuring runout at drive gear back

15) Checking and adjusting tooth contact of drive gear.
a. Paint evenly both sides of three or four teeth on drive gear with red lead. Check the contact pattern after rotating drive gear several revolutions back and forth until definite contact pattern develops on drive gear.
b. When the contact pattern is incorrect, readjust according to the instructions given in "Tooth contact pattern".
Be sure to wipe off red lead completely upon completion of adjustment.
c. After completing the above adjustment, install oil seal in side bearing retainer.

NOTE:
a. Use Drift (398437700) to press the oil seal into position.
b. Apply chassis grease between the oil seal lips.

d. Install rear cover.

Torque (Rear cover bolt	19 – 25 N·m (1.9 – 2.6 kg-m, 14 – 19 ft-lb)

7. Mounting

a. Raise differential assembly using a jack. Remount the differential assembly by temporarily tightening four mounting nuts at the front and two mounting nuts at the rear.
b. Install other parts in the reverse order of dismounting.
c. After installation fill differential case with gear oil to the upper plug level.

Oil capacity	0.8 ℓ (1.7 US pt, 1.4 Imp pt)

d. Torque

Differential assembly mounting nut	69 – 78 N·m (7.0 – 8.0 kg-m, 51 – 58 ft-lb)
Propeller shaft flange yoke to companion flange	18 – 25 N·m (1.8 – 2.5 kg-m, 13 – 18 ft-lb)
Spindle installing bolt	31 – 36 N·m (3.2 – 3.7 kg-m, 23 – 27 ft-lb)

Downloaded from www.Manualslib.com manuals search engine

TOOTH CONTACT PATTERN

Condition	Contact pattern	Adjustment
Correct tooth contact Tooth contact pattern slightly shifted toward toe under no load rotation. (When loaded, contact pattern moves toward heel.)	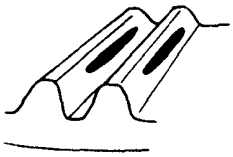	—
Face contact Backlash is too large.	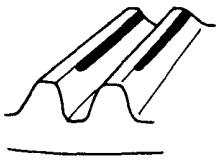 This may cause noise and chipping at tooth ends.	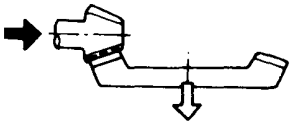 Increase thickness of drive pinion height adjusting washer in order to bring drive pinion closer to drive gear center.
Flank contact Backlash is too small.	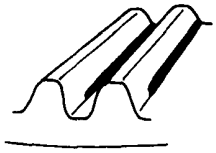 This may cause noise and stepped wear on surfaces.	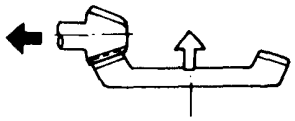 Reduce thickness of drive pinion height adjusting washer in order to move drive pinion away from drive gear.
Toe contact	 Contact area is small. This may cause chipping at toe ends.	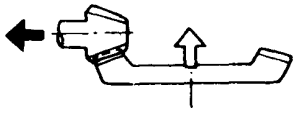 Adjust as for flank contact.
Heel contact	 Contact area is small. This may cause chipping at heel ends.	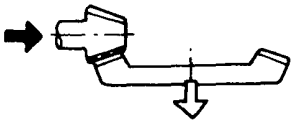 Adjust as for face contact.

Fig. 8-41

A13-164

Downloaded from www.Manualslib.com manuals search engine

8-4. Drive Shaft

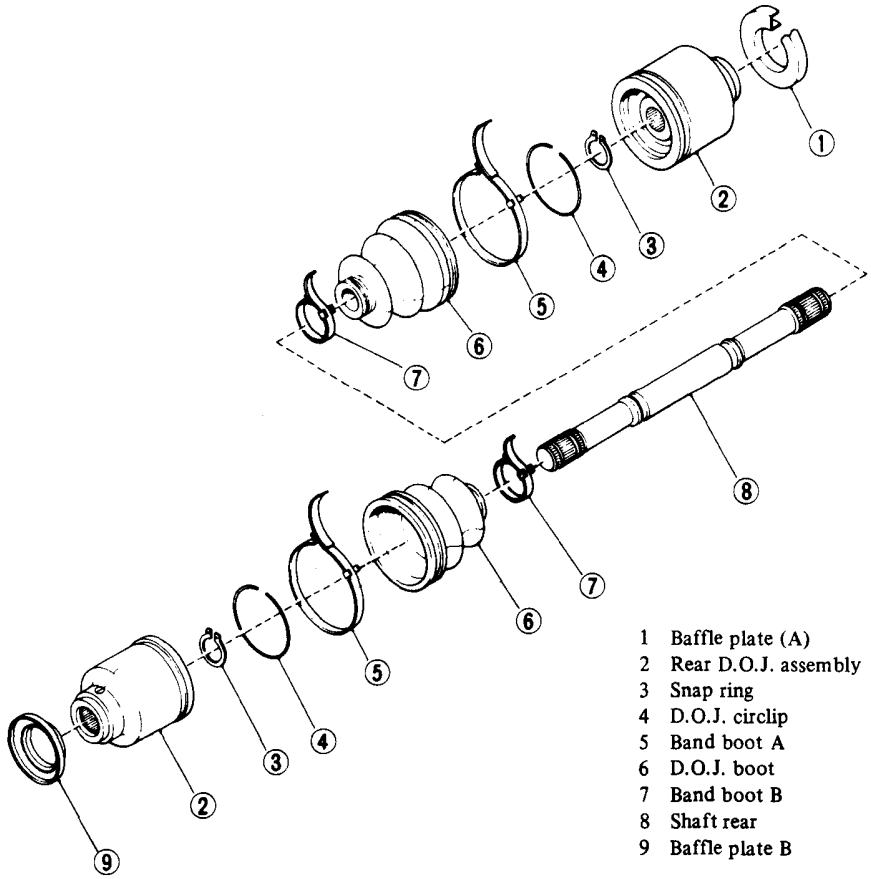

Fig. 8-42 Construction of rear drive shaft

Disassemble and reassemble the rear drive shaft assembly in the same assembling procedure as of the D.O.J. of the front axle shaft.

NOTE:
When replacing band only, winding up type band (not handy type band) is provided.

8-5. Propeller Shaft

1. Removal

a. Jack up the vehicle and support it with rigid racks.
b. Detach propeller shaft flange yoke from companion flange of differential assembly.
c. Take out propeller shaft assembly rearward.

NOTE:
a. Prepare an oil can and cap since the mission oil flows out from extension at removing propeller shaft assembly.
b. When removing propeller shaft assembly, pay attention not to damage the sliding surfaces of rear drive shaft (extension) spline, oil seal and sleeve yoke.
c. Insert the cap into the extension to prevent mission oil from flowing out immediately after removing the propeller shaft assembly.

2. Inspection

As a rule, do not disassemble the propeller shaft assembly since it is balanced. Inspect each part before disassembling, and correct or replace if any fault is evident.
1) Replace if the journal portion is worn, damaged, or abnormal anyway.
2) Replace the snap ring if it is damaged or its tension is insufficient.
3) Correct the loose joint by using a selective snap ring.
4) Replace if any dent or crack is evident on the tube surface.
5) Replace if runout of the tube exceeds the limit when rotating with the both end supported.

Limit of runout	0.6 mm (0.024 in)

6) Correct or replace if joint movement is not smooth or the bending resistance exceeds the limit.

Maximum joint bending resistance	1.5 N·m (15 kg-cm, 13 in-lb)

Downloaded from www.Manualslib.com manuals search engine

3. Disassembly

When disassembling or repairing because of sheer necessity, proceed in the following order, and never forget to provide matching marks on the sleeve yoke, flange yoke, tube, etc. before disassembly.

1) Remove snap ring with a flat blade screw driver.

2) Remove bearing race by tapping the root of yoke with a hammer.

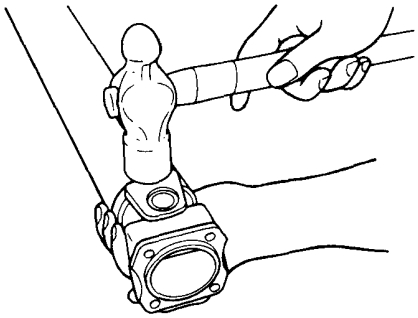

A14-041

Fig. 8-43 Removing bearing race

3) Remove journal from yoke.

NOTE:

Be careful not to damage journal when pulling it out from yoke.

4. Assembly

1) Assemble in the reverse order of disassembling and never fail to align the marks made prior to disassembling.

2) Since this joint is of the maintenance-free type, refill new grease when reassembling.

3) Adjust journal axial play by selecting proper snap rings. The opposing snap rings must be of the same thickness.

Journal axial play	0.02 mm (0.0008 in) or less

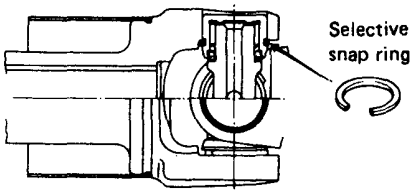

A14-094

Fig. 8-44 Selecting snap rings

5. Installation

1) Reverse removal procedures.

2) Apply grease to the spline and outside of the sleeve yoke.

Torque (Flange yoke to companion flange)	18 – 25 N·m (1.8 – 2.5 kg-m, 13 – 18 ft-lb)

Selective snap rings

Part No.	Thickness mm (in)	Paint color
622033000	2.00 ± 0.01 (0.0787 ± 0.0004)	White
622033010	2.02 ± 0.01 (0.0795 ± 0.0004)	Yellow
622033020	2.04 ± 0.01 (0.0803 ± 0.0004)	Red
622033030	2.06 ± 0.01 (0.0811 ± 0.0004)	Green
622033040	2.08 ± 0.01 (0.0819 ± 0.0004)	Blue
622033050	2.10 ± 0.01 (0.0827 ± 0.0004)	Light Brown
622033060	2.12 ± 0.01 (0.0835 ± 0.0004)	No paint
622033070	2.14 ± 0.01 (0.0843 ± 0.0004)	Pink

Downloaded from www.Mandalsfb.com manuals search engine

8-6. Troubleshooting

1. Rear Differential

Symptom and possible cause	Remedy
Oil leakage	
• Worn, scratched, or incorrectly seated front or side oil seal. Scored, battered, or excessively worn sliding surface of companion flange.	Repair or replace.
• Clogged or damaged air breather.	Clean, repair or replace.
• Loose bolts on differential spindle or side retainer, or incorrectly fitted O-ring.	Tighten bolts to specified torque. Replace O-ring.
• Loose rear cover attaching bolts or damaged gasket.	Tighten bolts to specified torque. Replace gasket and apply liquid packing.
• Loose oil filler or drain plug.	Retighten and apply liquid packing.
• Wear, damage or incorrectly fitting for spindle, side retainer and oil seal.	Repair or replace.
Seizure Seized or damaged parts should be replaced, and also other parts should be thoroughly checked for any defect and repaired or replaced as required.	
• Insufficient backlash for hypoid gear.	Readjust or replace.
• Excessive preload for side, rear, or front bearing.	Readjust or replace.
• Insufficient or improper oil used.	Replace seized part and fill with specified oil to specified level.
Damage Damaged parts should be replaced and also other parts should be thoroughly checked for any defect and repaired or replaced as required.	
• Improper backlash for hypoid gear.	Replace.
• Insufficient or excessive preload for side, rear, or front bearing.	Readjust or replace.
• Excessive backlash for differential gear.	Replace gear or thrust washer.
• Loose bolts and nuts such as drive gear bolt.	Retighten.
• Damage due to overloading.	Replace.
Noises when starting or shifting gears Noises may be caused by differential assembly, universal joint, wheel bearing, etc. Find out what is actually making noise before disassembly.	
• Excessive backlash for hypoid gear.	Readjust.
• Excessive backlash for differential gear.	Replace gear or thrust washer.
• Insufficient preload for front or rear bearing.	Readjust.
• Loose drive pinion nut.	Tighten to specified torque.
• Loose bolts and nuts such as side bearing retainer attaching bolt.	Tighten to specified torque.

Downloaded from www.Manualslib.com manuals search engine

Symptom and possible cause	Remedy
Noises when curving	
• Damaged differential gear. • Excessive wear or damage of thrust washer. • Broken pinion mate shaft. • Seized or damaged side bearing.	Replace. Replace. Replace. Replace.
Gear noises Since noises from engine, muffler, transmission, propeller shaft, wheel bearings, tires, and body are sometimes mistaken for noises from differential assembly, be careful in checking them. Inspection methods to locate noises include coasting, accelerating, cruising, and jacking up all four wheels. Perform these inspections according to condition of trouble. When listening to noises, shift gears into four wheel drive and fourth speed position, trying to pick up only differential noise.	
• Improper tooth contact of hypoid gear. • Improper backlash for hypoid gear. • Scored or chipped teeth of hypoid gear. • Seized hypoid gear. • Improper preload for front or rear bearings. • Seized, scored, or chipped front or rear bearing. • Seized, scored, or chipped side bearing. • Vibrating differential carrier.	Readjust or replace hypoid gear set. Readjust. Replace hypoid gear set. Replace hypoid gear set. Readjust. Replace. Replace. Replace.

2. Propeller Shaft

Trouble and possible cause	Remedy
Vibration of propeller shaft Vibration is caused by propeller shaft during operation and transferred to vehicle body. Generally vibration increases in proportion to vehicle speed.	
• Worn or damaged universal joint needle bearing. • Unbalanced propeller shaft due to bend or dent. • Loose installation of propeller shaft.	Replace. Replace. Retighten.
Tapping when starting and noise while cruising, caused by propeller shaft.	
• Worn or damaged universal joint. • Worn spline of sleeve yoke. • Loose installation of propeller shaft. • Loose installation of joint.	Replace. Replace. Retighten. Adjust snap ring.

Downloaded from www.Manualslib.com manuals search engine

8-7. Special Tools

398427700	398457700	398517700	398507703
Flange Wrench	Attachment	Replacer	Dummy collar
Companion Flange	Side bearing retainer	Rear bearing cone	Pinion height and preload adjustment
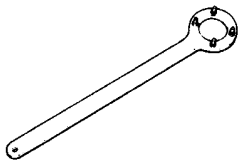 *Fig. 8-45* A14-043	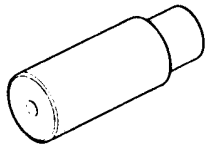 *Fig. 8-49* A14-047	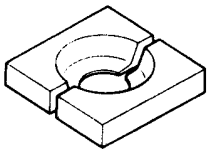 *Fig. 8-53* A14-076	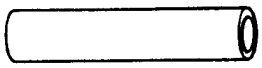 *Fig. 8-57* A14-082
398527700	399527700	397471600	398507704
Pulley Ass'y	Puller Set	Handle & Drift Kit	Block
Oil seal Side bearing cup	Side bearing cone	Front and rear bearing cup	Pinion height and preload adjustment
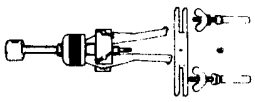 *Fig. 8-46* A14-044	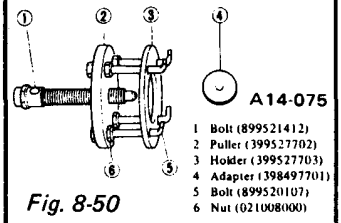 *Fig. 8-50*	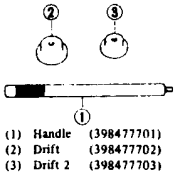 *Fig. 8-54* ST-143	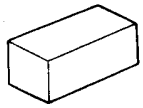 *Fig. 8-58* A14-083
398417700	899904100	398507701	398217700
Drift	Straight Pin Remover	Gauge	Attachment Set
Oil seal	Differential pinion shaft lock pin	Pinion height adjustment	Differential case
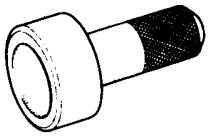 *Fig. 8-47* A14-045	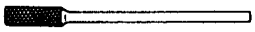 *Fig. 8-51* A12-187	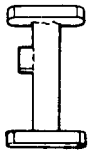 *Fig. 8-55* A14-080	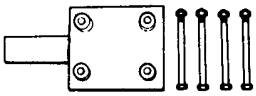 *Fig. 8-59* A14-084
398437700	398467700	398507702	398177700
Drift	Drift	Dummy Shaft	Installer
Oil seal	Drive pinion Pilot bearing Front bearing cone	Pinion height and Preload adjustment	Rear bearing cone
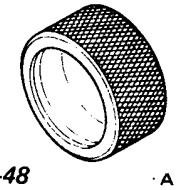 *Fig. 8-48* A14-046	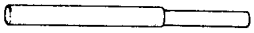 *Fig. 8-52* A14-049	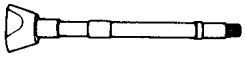 *Fig. 8-56* A14-081	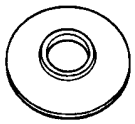 *Fig. 8-60* A14-085

Downloaded from www.Manualslib.com manuals search engine

399780104	398227700		
Weight	Weight		
Front bearing cone Pilot bearing Companion flange	Side bearing		
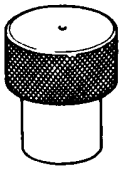 *Fig. 8-61* A12-172	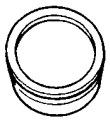 *Fig. 8-65* A14-087		
899580100	398487700		
Installer	Drift		
Front bearing cone Pilot bearing	Side bearing cone		
 Fig. 8-62 A12-179	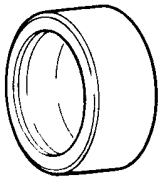 *Fig. 8-66* A14-088		
899874100	925560000		
Installer	Wrench		
Companion flange	Differential spindle set bolt		
 Fig. 8-63 A12-185	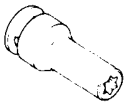 *Fig. 8-67* ST-032		
398237700			
Gauge			
Side bearing			
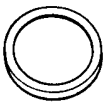 *Fig. 8-64* A14-086			

Downloaded from www.Manualslib.com manuals search engine

CHAPTER 9

SUSPENSION, WHEELS AND AXLES

	Page
• SPECIFICATIONS AND SERVICE DATA	9– 2
• SUSPENSION	
9– 1. COMPONENT PARTS	9– 6
9– 2. FRONT SUSPENSION	9– 8
9– 3. FRONT SUSPENSION DAMPER STRUT	9–13
9– 4. STABILIZER	9–17
9– 5. FRONT CROSSMEMBER	9–17
9– 6. BALL JOINT	9–18
9– 7. REAR SUSPENSION	9–19
9– 8. ADJUSTMENT OF POSTURE (4WD Models Only)	9–23
9– 9. ADJUSTMENT OF REAR ROAD CLEARANCE	9–24
• WHEELS AND AXLES	
9–10. COMPONENT PARTS	9–25
9–11. HOUSING	9–26
9–12. FRONT AXLE SHAFT	9–29
9–13. REPLACEMENT OF D.O.J./D.O.J. BOOT OF FRONT AXLE SHAFT	9–32
9–14. REAR AXLE (Except 4WD)	9–33
9–15. REAR AXLE OF 4WD	9–35
9–16. WHEEL	9–38
• TROUBLESHOOTING	9–41
• SPECIAL TOOLS	9–42

SUBARU

Downloaded from www.Manualslib.com manuals search engine

●SPECIFICATIONS AND SERVICE DATA

Front suspension	Type	McPherson strut type, independent suspension		
	Stabilizer	Bar diameter		20 mm (0.79 in)
	Coil spring	Wire diameter		Other than 4WD: 12.5 mm(0.492 in) 4WD: 12.0 mm (0.472 in)
		Coil diameter		130 mm (5.12 in)
		Free length		319 mm (12.56 in)
		Number of coils	Over all	5.4
			Effective number	3.9
		Coefficient of spring		23.5 N/mm (2.4 kg/mm, 134 lb/in)
	Damper strut	Outer cylinder length		Other than 4WD: 359 mm (14.13 in) 4WD: 376 mm (14.80 in)
		Maximum length		Other than 4WD: 516 mm (20.31 in) 4WD: 521 mm (20.51 in)
		Minimum length		Other than 4WD: 395 mm (15.55 in) 4WD: 412 mm (16.22 in)
		Stroke		Other than 4WD: 121 mm (4.76 in) 4WD: 109 mm (4.29 in)
		Piston rod diameter		20 mm (0.79 in)
		Damping force [at the piston speed 0.3 m/sec (1.0 ft/sec)]	Expansion	785 N (80 kg, 176 lb)
			Compression	490 N (50 kg, 110 lb)
Rear suspension	Type	Semi-trailing arm type, independent suspension		
	Torsion bar spring	Bar diameter		21 mm (0.83 in)
		Inside serration	Number of teeth	37
			Outer diameter	28.5 mm (1.122 in)
		Outside serration	Number of teeth	34
			Outer diameter	26.25 mm (1.0335 in)
	Shock absorber	Cylindrical double action type		
		Maximum length	Hatchback, Sedan and Hardtop	433.8 mm (17.08 in)
			Hatchback 4WD	430.5 mm (16.95 in)
			Station Wagon	448.5 mm (17.66 in)
			Station Wagon 4WD and BRAT	440.1 mm (17.33 in)
		Minimum length	Hatchback, Sedan and Hardtop	307.5 mm (12.11 in)
			Hatchback 4WD	313.5 mm (12.34 in)
			Station Wagon	315 mm (12.40 in)
			Station Wagon 4WD and BRAT	315.8 mm (12.43 in)
		Stroke	Hatchback, Sedan and Hardtop	126.3 mm (4.97 in)
			Hatchback 4WD	117 mm (4.61 in)
			Station Wagon	133.5 mm (5.26 in)
			Station Wagon 4WD and BRAT	124.3 mm (4.89 in)
		Piston rod diameter		10 mm (0.39 in) [SW & SW 4WD: 12.5 mm (0.492 in)]
		Damping force [at the piston speed 0.3 m/sec (1.0 ft/sec)]	Expansion	785 N (80 kg, 176 lb)
			Compression	392 N (40 kg, 88 lb) [SW & SW 4WD: 490 N (50 kg, 110 lb)]

Downloaded from www.Manualslib.com manuals search engine

ITEM				STANDARD	SERVICE LIMIT
SUSPENSION	Damper strut	Piston rod	Bend limit	0.05 mm (0.0020 in)	
			Wear limit of outer diameter	0.02 mm (0.0008 in)	
			Outer diameter (TOKICO)	19.94 to 19.98 mm (0.7850 to 0.7866 in)	
			Outer diameter (KYB)	19.935 to 19.981 mm (0.7848 to 0.7867 in)	
			Outer diameter (SHOWA)	19.98 to 20.01 mm (0.7866 to 0.7878 in)	
			Clearance between outer shell and piston rod	0.8 mm (0.031 in) or less	
		Inner cylinder	Bend limit	0.2 mm (0.008 in)	
			Wear limit of inner diameter	0.1 mm (0.004 in)	
			Inner diameter (TOKICO)	30.05 to 30.15 mm (1.1831 to 1.1870 in)	
			Inner diameter (KYB)	30.20 to 30.28 mm (1.1890 to 1.1921 in)	
			Inner diameter (SHOWA)	30.0 to 30.052 mm (1.1811 to 1.1831 in)	
		Oil quantity	(4WD)	220 cm^3 (220 cc, 13.42 cu in)	
			(Other than 4WD)	205 cm^3 (205 cc, 12.51 cu in)	
	Posture adjustment	Front	(4WD only)	Only upward 25 mm (0.98 in)	
		Rear	(4WD only)	Only upward 30 mm (1.18 in)	

• Wheel Alignment

		Hatchback, Sedan and Hardtop	Station Wagon	Hatchback 4WD	Station Wagon 4WD and BRAT
Front	Camber	45′ to 2°15′	1° to 2°30′	1°40′ to 3°10′	
	Caster	−1°10′ to 20′	−50′ to 40′	−1°15′ to 15′	−1°25′ to 5′
	Toe-in	1 ± 1 mm (0.04 ± 0.04 in)		OUT 5 ± 1 mm (OUT 0.20 ± 0.04 in)	
	Side slip (With one person)	−3 to 3 mm (−0.12 to 0.12 in)		2 to 8 mm (0.08 to 0.31 in)	
	Road clearance*1	240 to 265 mm (9.45 to 10.43 in)	245 to 270 mm (9.65 to 10.63 in)	265 to 290 mm*3 (10.43 to 11.42 in)	
Rear	Camber	−45′ to 45′			−25′ to 1°05′
	Toe-in	−3 to 3 mm (−0.12 to 0.12 in)			
	Side slip (With one person)	−5 to 5 mm (−0.20 to 0.20 in)			
	Road clearance*2	260 to 280 mm (10.24 to 11.02 in)	280 to 300mm (11.02 to 11.81 in)	320 to 340 mm*4 (12.60 to 13.39 in)	335 to 355 mm*5 (13.19 to 13.98 in)

*1 Measure the road clearance at center of front end face of the transverse link attaching bolt.
*2 Measure the road clearance at lower face of the crossmember.
*3 GL model: 270 to 295 mm (10.63 to 11.61 in)
*4 GL model: 325 to 345 mm (12.80 to 13.58 in)
*5 GL model: 340 to 360 mm (13.39 to 14.17 in)

Downloaded from www.Manualslib.com manuals search engine

- **Tire Size and Inflation Pressure**

Model		Tire size	Rim size [Rim offset mm (in)]	Load condition	Tire inflation pressure kPa (kg/cm², psi) Front	Rear	Spare
Hatchback (except 4WD)	STD	155 SR 13	4½-J x 13 [55 (2.17)]		177 (1.8, 26)		
Hatchback, Sedan and Hardtop (except 4WD)	DL						
	GL	175/70 SR 13	5-J x 13 [55 (2.17)]				
Hatchback 4WD	STD	165 SR 13	4½-J x 13 [55 (2.17)]		177 (1.8, 26)		—
*1		T135/70 D 15	4T x 15 [35 (1.38)]		—		412 (4.2, 60)
	GL	185/70 SR 13	5-J x 15 [42 (1.65)]		177 (1.8, 26)		—
*1		T135/70 D 15	4T x 15 [35 (1.38)]		—		412 (4.2, 60)
Station Wagon (except 4WD)	DL	155 SR 13	4½-J x 13 [55 (2.17)]	Light Load	177 (1.8, 26)	177 (1.8, 26)	216 (2.2, 32)
				Full Load		216 (2.2, 32)	
	GL	175/70 SR 13	5-J x 13 [55 (2.17)]	Light Load	177 (1.8, 26)	177 (1.8, 26)	
				Full Load		216 (2.2, 32)	
Station Wagon 4WD and BRAT	DL	165 SR 13	4½-J x 13 [55 (2.17)]	Light Load	177 (1.8, 26)	177 (1.8, 26)	—
				Full Load		216 (2.2, 32)	
*1		T135/70 D 15	4T x 15 [35 (1.38)]	—	—		412 (4.2, 60)
	GL	185/70 SR 13	5-J x 13 [42 (1.65)]	Light Load	177 (1.8, 26)	177 (1.8, 26)	
				Full Load		216 (2.2, 32)	
*1		T135/70 D 15	4T x 15 [35 (1.38)]	—	—		412 (4.2, 60)

*1: "T-type" tire (T135/70 D 15) for temporary use is prepared for 4WD vehicles as a spare tire.

Downloaded from www.Manualslib.com manuals search engine

● Rear Suspension

1. Other than 4WD

Tightening torque N·m (kg-m, ft-lb)
T1: 74 – 93 (7.5 – 9.5, 54 – 69)
T2: 88 – 118 (9 – 12, 65 – 87)
T3: 88 – 127 (9 – 13, 65 – 94)
T4: 118 – 147 (12 – 15, 87 – 108)
T5: 31 – 39 (3.2 – 4.0, 23 – 29)

1 [illegible]member CP
2 [illegible]r bush
3 [illegible]ont bush
4 Torsion bar
5 Outer bush
6 Outer arm
7 Inner bush
8 Inner arm
9 Shock absorber
10 Helper

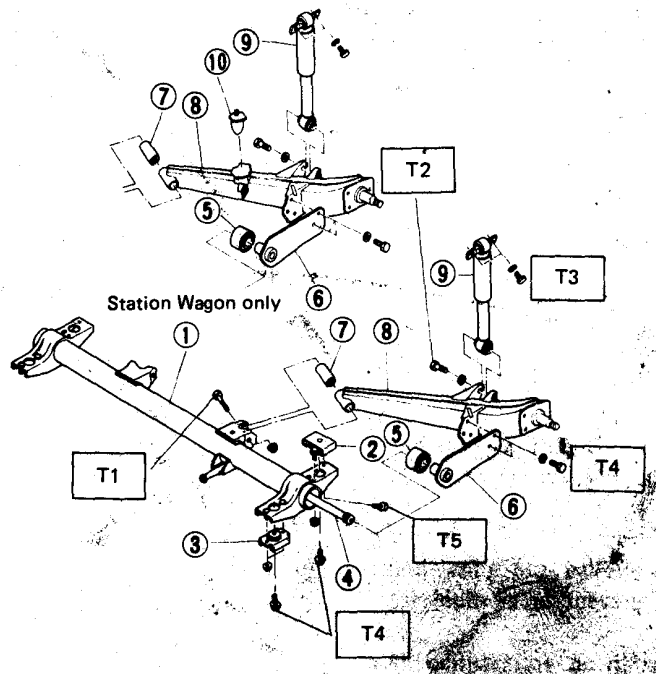

Fig. 9-3 Component parts of rear suspension (Except 4WD)

2. 4WD

Tightening torque N·m (kg-m, ft-lb)
T1: 74 – 93 (7.5 – 9.5, 54 – 69)
T2: 88 – 118 (9 – 12, 65 – 87)
T3: 88 – 127 (9 – 13, 65 – 94)
T4: 118 – 147 (12 – 15, 87 – 108)
T5: 31 – 39 (3.2 – 4.0, 23 – 29)

1 Crossmember CP
2 Rear bush
3 Front bush
4 Torsion bar
5 Outer bush
6 Outer arm
7 Inner bush
8 Inner arm
9 Shock absorber
10 Center arm
11 Center arm bolt
12 Helper
13 Castle nut
14 Pin

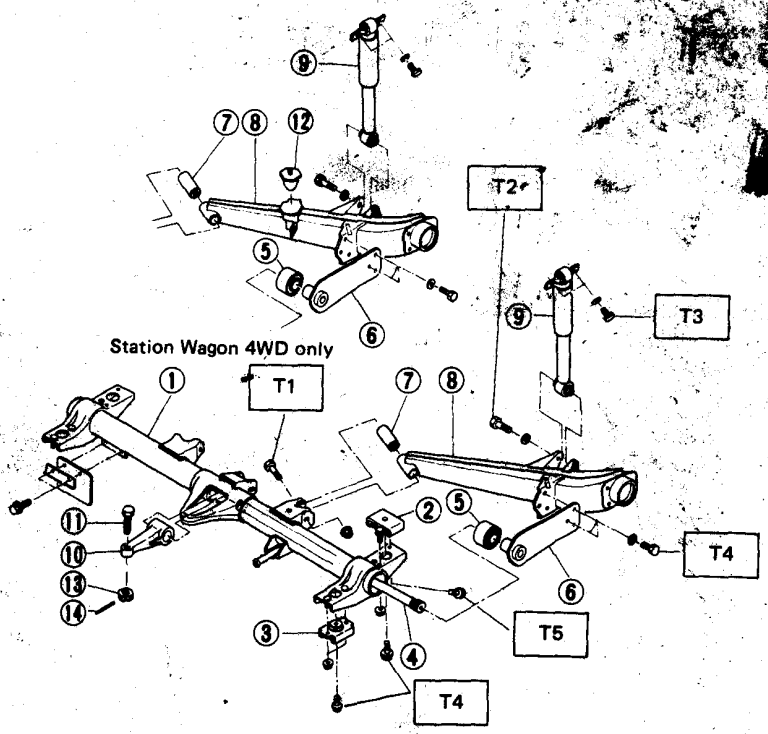

Fig. 9-4 Component parts of rear suspension (4WD)

A15-159

Downloaded from www.Manualslib.com manuals search engine

9-2. Front Suspension

1. Removal

1) Disconnect ground cable from battery.
2) Apply parking brake.
3) Loosen front wheel nuts.
4) Jack up vehicle, support it with safety stands (rigid racks) and remove front tires & wheels.
5) Release parking brake.
6) Remove parking brake cable bracket from transverse link.
7) Disconnect parking brake cable from brake caliper.
8) Disconnect brake hose from brake pipe at apron bracket.

NOTE:
a. Fit air bleeder cap onto brake pipe to prevent brake fluid from pouring.
b. When removing or installing flare nut, use flare nut wrench without fail.

9) Drive out spring pin of D.O.J. at inner end by using a steel rod of 6 mm diameter.
10) Disconnect front end of stabilizer from leading rod.
11) Remove leading rod from rear crossmember.
12) Disconnect transverse link bush from front crossmember.
13) Take out transverse link along with leading rod.
14) Remove castle nut and ball stud of tie-rod end.
15) Loosen nuts connecting strut mount to body, then pull D.O.J. out of differential spindle, and remove front suspension assembly from body.

2. Inspection

Check the removed parts for any wear, damage and crack, and correct or replace if defective.

3. Installation

1) Install strut mount to body.

Torque	29 – 39 N·m (3.0 – 4.0 kg-m, 22 – 29 ft-lb)

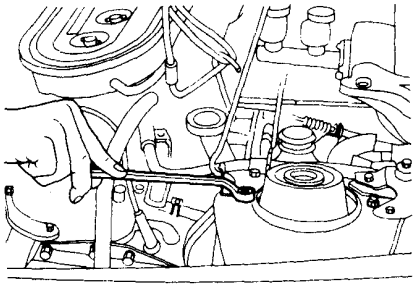

A15-076

Fig. 9-5

NOTE:
Take care of the installing direction of strut mount.

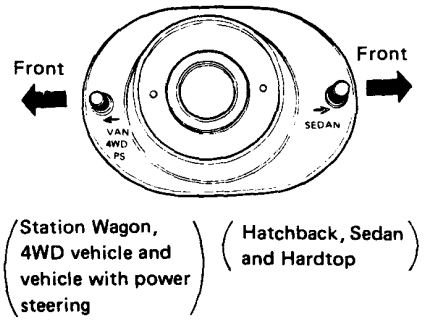

A15-146

Fig. 9-6 Installing direction of strut mount

2) Align the spring pin holes of D.O.J. and differential spindle, and insert D.O.J. to differential spindle.

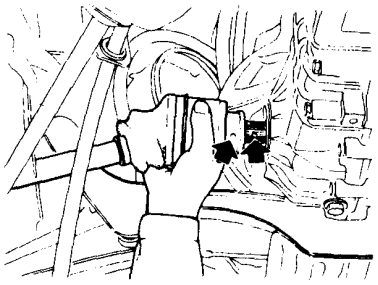

A15-011

Fig. 9-7 Inserting D.O.J. to drive shaft

3) Install leading rod to rear cross-member according to the following procedure.
(1) Install a bushing to leading rod.
(2) Install leading rod to rear cross-member, besides install a bushing, a plate and a self-locking nut.
(3) Tighten self-locking nut.

Torque	36 – 42 N·m (3.7 – 4.3 kg-m, 27 – 31 ft-lb)

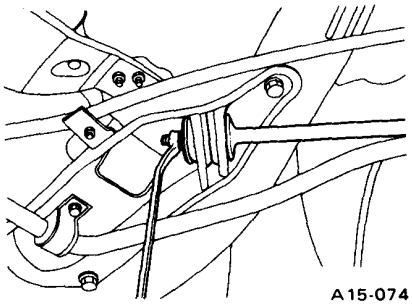

A15-074

Fig. 9-8

NOTE:
a. Self-locking nuts should be replaced with new one whenever it is removed.
b. Before installing the bushing to the leading rod, soak the bushing to the soap solution for easy installing the bushing to correct position.

Downloaded from www.Manualslib.com manuals search engine

c. In case that the creaking noise breaks out during the self-locking nut fully tightening, there is possibility that the rubber bushing is pinched between the pipe and the washer. Then, loosen the self-locking nut at once and retighten the nut after centering the leading rod.

4) Connect D.O.J. and differential spindle by driving spring pin in.

NOTE:

a. Make sure that the holes are aligned before driving the spring pin in.

b. When driving the spring pin in, always use new one.

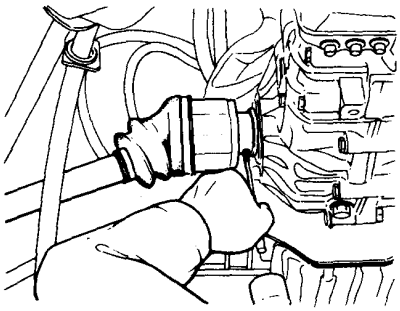

A15-015

Fig. 9-9 Driving spring pin in

5) Install transverse link temporarily to crossmember by using bolt and self-locking nut.

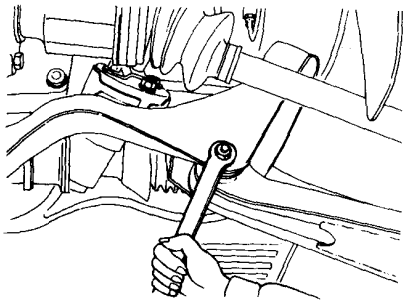

A15-077

Fig. 9-10 Installing transverse link

6) Install tie rod end ball joint to housing knuckle arm.

Torque (Castle nut)	25 – 29 N·m (2.5 – 3.0 kg-m, 18 – 22 ft-lb)

NOTE:

After tightening the nut to the specified torque, adjust groove on the nut and hole on the ball joint by retightening the nut from 0 to 60 degrees.

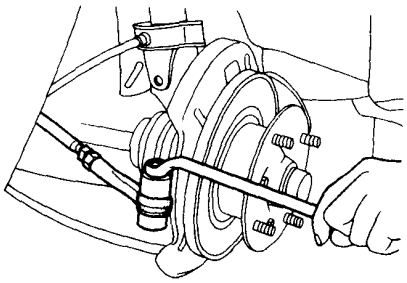

A15-078

Fig. 9-11 Installing tie rod end

7) After then, install new cotter pin into the hole, and bend it firmly.

8) Connect stabilizer front end through bracket to leading rod.

Torque	18 – 31 N·m (1.8 – 3.2 kg-m, 13 – 23 ft-lb)

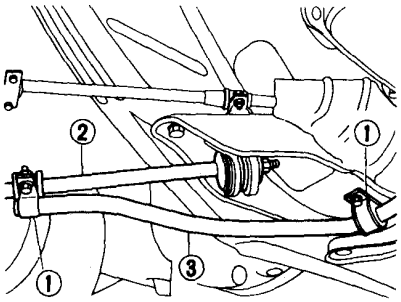

1 Bracket
2 Leading rod
3 Stabilizer

A15-073

Fig. 9-12

9) Attach brake hose to apron bracket by using clip, and then connect brake hose to brake pipe.

Torque	12 – 18 N·m (1.2 – 1.8 kg-m 9 – 13 ft-lb)

10) Install hand brake cable bracket to transverse link.

Torque (Hand brake cable bracket installing bolt)	6.4 – 9.3 N·m (0.65 – 0.95 kg-m, 4.7 – 6.9 ft-lb)

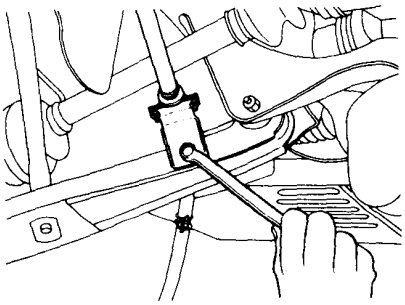

A15-069

Fig. 9-13 Installing hand brake cable bracket

11) Install hand brake outer cable by attaching outer cable clip to brake caliper.

Install the hand brake cable end to the caliper lever.

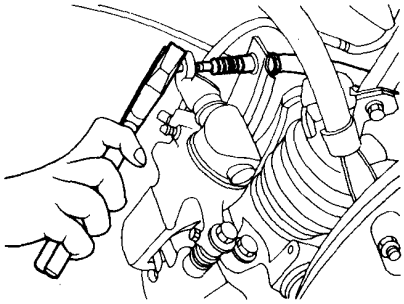

A15-070

Fig. 9-14

12) Install wheels.

Torque (wheel nut)	78 – 98 N·m (8 – 10 kg-m, 58 – 72 ft-lb)

13) Bleed air from brake system.

14) Lower vehicle and tighten self-locking nut which installs transverse link to crossmember.

Torque (self-locking nut)	59 – 69 N·m (6.0 – 7.0 kg-m, 43 – 51 ft-lb)

Downloaded from www.Manualslib.com manuals search engine

4. Adjustment

Make sure to measure wheel alignment when removing and reinstalling the suspension. Wheel alignment should be adjusted or checked to the specified values.

5. Inspection and Adjustment

The following chart outlines the basic inspection and adjustment procedures for the entire front suspension system. Regarding specific procedures for individual parts, refer to the applicable instructions set forth in this manual.

Item to be checked	Description	Remarks
Coil spring	Vehicle posture Park the vehicle on a level, solid surface, and check for lateral inclination of the vehicle. **NOTE:** **a. Make sure that all tires are inflated to the specified pressure.** **b. If any noticeable lateral vehicle inclination is detected visually, determine whether it is due to permanent deformation of coil spring(s), improper body alignment, or other factors.** **c. If vehicle inclination (to either side) is due to permanent deformation of coil spring, remove the coil spring and measure its free length.** **If the free length is not within the specification, replace the coil spring.** Specified free length: 319 mm (12.56 in) **d. Replace the coil spring if it is cracked, broken or damaged.**	Visual inspection
Damper strut	Damping Force/Noise Rock the left side of the vehicle up and down, and then rock the right side, to check for noise or variances in vehicle posture. **NOTE:** **If the up-and-down movement (when hands have been released) continues longer than usual or if any abnormal noise is detected, check the condition of the strut itself.** **Refer to instructions for inspection procedures.** Oil leakage Check for oil leaks at or around the lower portion of the strut and oil seal assembly. **NOTE:** **It is normal for a trace of oil to be oozing at the oil seal assembly.** Cracks, Damage or Deformity Check the strut housing for any cracks, damage or deformity. Replace the dust cover if it is damaged.	Visual and tactile inspection

Downloaded from www.Manualslib.com manuals search engine

Item to be checked	Description	Remarks
Wheel alignment	**Preliminary Inspection** Before checking/adjusting front wheel alignment, be sure to make a prior inspection of the following points and repair/replace the damaged portions/parts as necessary. • Tire pressure • Wear or damage of tires • Wheel balance • Looseness on suspension • Looseness and smooth operation on axle linkage and connection • Looseness and smooth operation on steering linkage and connection • Shock absorber operation and oil leakage • Damage, deformation etc. on body attaching portion of suspension, axle and steering linkage and connection • Vehicle height [It is recommended that the difference of vehicle height between the front and rear ends, or the left and right sides is less than 10 mm (0.39 in) in the unloaded condition.] • Stain, rust, grease leakage etc. on front end parts **Toe-in Adjustment** Loosen both the left and right lock nuts ①. If toe-in is not within the specified value, turn the left and right tie rods ② equal amounts until the toe-in is within the specified range. 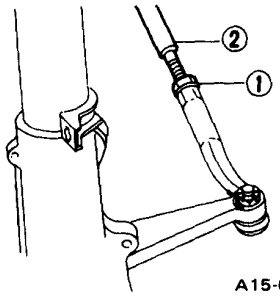 1 Lock nut 2 Tie rod A15-079 *Fig. 9-15* Torque (lock nut): 78 – 88 N·m (8 – 9 kg-m, 58 – 65 ft-lb) **NOTE:** **a. If the tie rod and the tie rod end have been disassembled, assemble these parts in advance so that the toe-in is near the specified range.** **b. Both the left and right tie rods are right-hand threaded. To increase toe-in, turn both tie rods counterclockwise equal amounts (as viewed from the outside of the vehicle).** **c. If the side slip is not within the specified range but although the toe-in within the specified value, check the steering gear box, ball joints, and wheel bearings for play, and repair or replace the part(s) if defective.** **d. Always adjust the toe-in after steering angle adjustment.** **e. Refer to the Specifications for the specified toe-in.**	Toe-in gauge

Downloaded from www.Manualslib.com manuals search engine

Item to be checked	Description	Remarks
Wheel alignment (continued)	Camber and Caster Neither camber nor caster can be adjusted. To measure camber and caster, place the wheel to be measured on the turning radius gauges ①, and make sure the vehicle is level. Set Adapter Assembly ③ (925621000 for steel wheel) into the center of the wheel, and then install the alignment gauge ②. 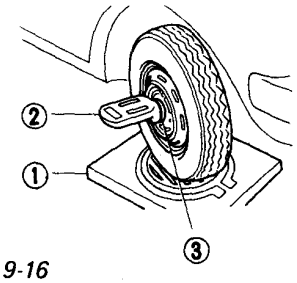 *Fig. 9-16* **NOTE:** **a. Refer to the Specifications for the camber and caster values.** **b. If the camber or caster measurement is not within the specified range, check for body alignment, deformed transverse link or faulty parts. Repair or replace the parts, if necessary.**	
General	Looseness Check each mounting portion of the following for looseness and inspect the castle nuts for missing cotter pins. (1) Strut mount to car body (2) Damper strut piston rod to strut mount (3) Damper strut to housing (4) Housing to ball joint (5) Ball joint to transverse link (6) Transverse link to leading rod (7) Leading rod to crossmember (rear) (8) Transverse link to crossmember (front) (9) Crossmember to body (10) Stabilizer to leading rod (11) Stabilizer to crossmember (rear)	
	Cracks, Damage or Deformity Check the following parts for cracks, damage or deformity. (1) Crossmembers (front and rear) (2) Damper strut (3) Housing (4) Ball joint (5) Transverse link (6) Leading rod (7) Stabilizer	Visual inspection
	Rubber Parts Check the following parts for deterioration, cracks or damage. (1) Strut mount (2) Damper strut dust cover (3) Ball joint boot (4) Transverse link bushing (5) Leading rod bushing (6) Stabilizer bushing	Visual inspection

Downloaded from www.Manualslib.com manuals search engine

9-3. Front Suspension Damper Strut

1. Removal and Disassembly

1) Disconnect ground cable from battery.
2) Apply parking brake.
3) Loosen front wheel nuts.
4) Jack up vehicle, support it with safety stands (rigid racks) and remove front tires & wheels.
5) Release parking brake.
6) Disconnect parking brake hose from brake pipe at apron bracket.

NOTE:
a. Fit air bleeder cap onto brake pipe to prevent brake fluid from pouring.
b. Whenever removing or installing flare nut, use flare nut wrench without fail.

7) Disconnect brake hose from caliper body, and detach brake hose.
8) Remove two damper strut installing bolts.
9) Pull strut out of housing gradually and carefully with housing assembly placed downward.

NOTE:
If strut is rusted, apply sufficient "CRC" on housing and strut before pulling strut out.

10) Remove nuts clamping strut mount to body.
11) Set damper strut assembly on Puller [included in Puller & Wrench (925651000)].
Fit the hook of Puller to the upper end of coil spring.

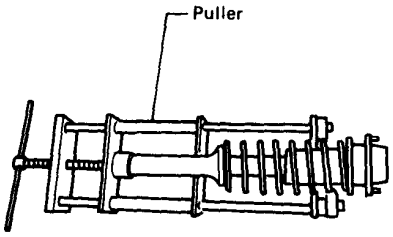

A15-018

Fig. 9-17

12) Hold damper strut assembly in a horizontal state.
Carefully turn in the thread of Puller and compress spring until the strut upper seat surface is separated from spring.
13) Loosen self-locking nut connecting rod of damper to strut mount by using Wrench [included in Puller & Wrench (925651000)] and 17 mm box wrench.

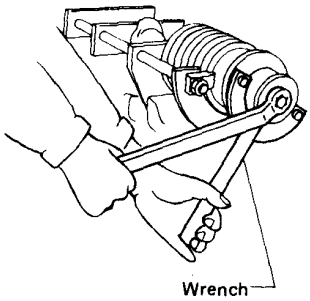

A15-084

Fig. 9-18

14) Pull strut mount out of rod.
15) Remove thrust washer with oil seal and washer (thrust bearing).

NOTE:
Take care not to drop them.

16) Remove spring retainer (upper).
17) Carefully return coil spring unscrewing Puller to the original position and remove Puller after spring is completely extended.
18) Remove coil spring.

NOTE:
Do not strike rod of damper.

19) Remove oil seal assembly by using special tool (Wrench 925390000).

NOTE:
a. Compress damper strut to its minimum length to prevent piston rod from damage.
b. When vising the damper strut at its connecting portion to housing, vise it through something like wooden block to prevent it from damage.
c. Start the job after cleaning around the oil seal assembly.

20) Pull out piston rod a little, and remove packing.

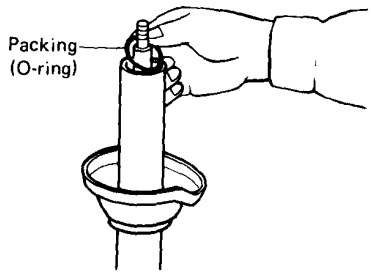

A15-086

Fig. 9-19

21) Pull out piston rod and rod guide.

NOTE:
Don't pull out piston rod quickly or along with inner cylinder to prevent oil spillage.

22) Remove inner cylinder slowly.
23) Pour oil out completely by turning outer shell upside down.
24) After cleaning disassembled parts with thinner or kerosene, blow off any dust, sludge etc., by compressed air.

NOTE:
Don't use thinner or kerosene for non-metalic parts. Clean them by using compressed air only.

2. Inspection

Check the disassembled parts for crack, damage and wear, and replace with new parts if defective.

1) Damper strut

1) Insert inner cylinder and piston rod into outer shell, and check if they move smoothly.
2) If not, check the following.

a. Oil seal assembly
If oil leakage is found around oil seal assembly while piston rod and inner cylinder are normal, replace oil seal as seal kit.

Downloaded from www.Manualslib.com manuals search engine

NOTE:
Oozing out of oil is normal, and there is no necessity for replacing oil seal.

b. Piston rod

Replace it with new damper strut if defective.

(1) If leaked oil spreads to near spring seat, check piston rod carefully for damage, uneven wear and bend.

NOTE:
Since slight scratch can cause oil leak, check piston rod as carefully as possible.

(2) Measure bend and wear as shown.

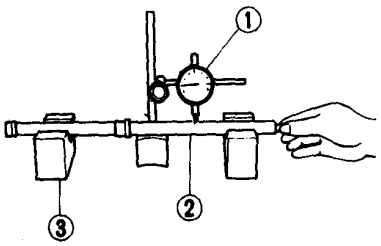

1 Dial gauge Bend Measuring
2 Piston rod
3 V-block

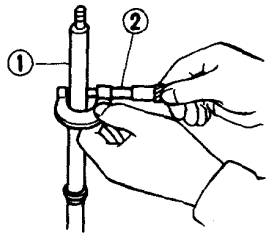

Wear Measuring

1 Piston rod
2 Micro meter

A15-090

Fig. 9-20 Measuring piston rod

Bend limit	0.05 mm (0.0020 in)
Wear limit	0.02 mm (0.0008 in)
Specified outer diameter	"TOKICO" 19.94 – 19.98 mm (0.7850 – 0.7866 in) "KYB" 19.935 – 19.981 mm (0.7848 – 0.7867 in) "SHOWA" 19.98 – 20.01 mm (0.7866 – 0.7878 in)

(3) Check piston rod-to-outer shell total clearance as shown.

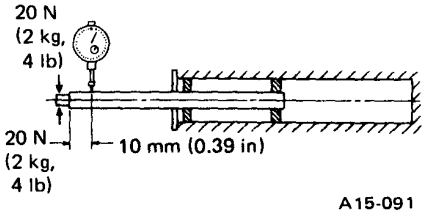

A15-091

Fig. 9-21 Measuring clearance

Clamp outer shell, and pull out piston rod to its maximum stroke. Set dial gauge, and apply 20 N (2 kg, 4 lb) of force upwards and downwards at its free end through spring balance, and read dial gauge.

Indication of dial gauge	0.8 mm or less (0.031 in)

c. Inner cylinder

Replace it with new damper strut if defective.

(1) Check for wear and damage on inner surface and for bend.
(2) Measure wear and bend as shown.

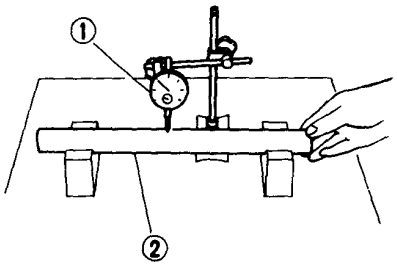

1 Dial gauge
2 Inner cylinder

A15-092

Fig. 9-22 Measuring of bend

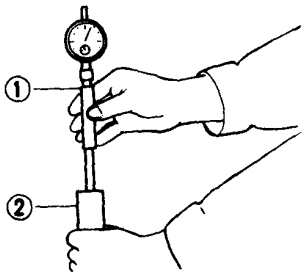

1 Cylinder gauge
2 Cylinder

A15-093

Fig. 9-23 Measuring bore of cylinder

Bend limit	0.2 mm (0.008 in)
Wear limit	0.1 mm (0.004 in)
Specified inner diameter	"TOKICO" 30.05 – 30.15 mm (1.1831 – 1.1870 in) "KYB" 30.20 – 30.28 mm (1.1890 – 1.1921 in) "SHOWA" 30.0 – 30.052 mm (1.1811 – 1.1831 in)

d. Outer shell

Replace it with new damper strut if defective.

(1) Distortion, crack and damage.
(2) Oil leakage around welded portion at its lower end.

2) Strut mount

1) Check rubber part for creep, crack and deterioration, and replace it with new one if defective.
2) If distortion is found on its connecting surface to body, replace it with new one.

3) Thrust washer

1) Check for wear, distortion, damage etc., and replace it with new one if defective.
2) If any scratch is found on sliding surface, replace it along with washer with new pair.

4) Oil seal

Check the lip of oil seal for wear, damage and deterioration, and replace it with new one if defective.

5) Dust cover

If any crack or damage is found, replace it with new one.

6) Coil spring

One having permanent strain should be replaced with new one. When vehicle posture is uneven although there is not considerable reasons like tyre puncture, uneven loading etc., check coil springs for its free length, crack etc., with referring to specifications.

Downloaded from www.Manualslib.com manuals search engine

3. Assembly Damper Strut

1) Insert piston rod into inner cylinder gradually.

NOTE:

a. Since all parts are made with accuracy, be careful not to drop it or to damage by using plier etc.

b. Be careful not to use glove or cloth to prevent it from getting dust.

c. When inserting piston rod into inner cylinder, compress piston ring slowly into cylinder by fingers not to damage it.

2) Insert inner cylinder with piston rod into outer shell slowly.

3) Pour oil into outer shell by using measuring cylinder.

Oil quantity	All models except 4WD 205 cm³ (205 cc, 12.51 cu in)
	4WD 220 cm³ (220 cc, 13.42 cu in)

NOTE:

a. Use always new oil, which is available as genuine parts "seal kit".

b. Measure oil with accuracy by using measuring cylinder.

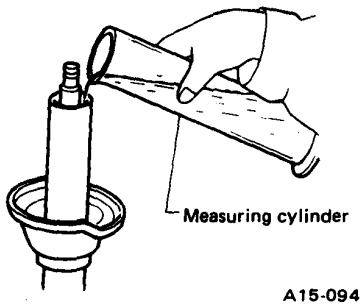

Fig. 9-24 Pouring oil

4) Attach packing to rod guide as rod guide assembly.

5) Install rod guide assembly to inner cylinder firmly with care of not damaging it by thread of piston rod.

NOTE:

a. Be careful not to spill oil.

b. After installing, make sure that packing does not rise from rod guide.

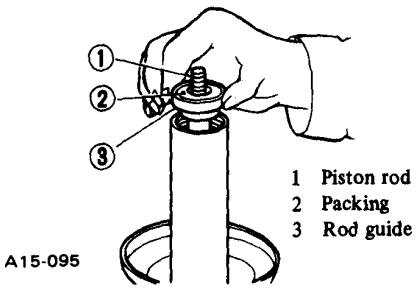

Fig. 9-25 Installing rod guide

6) Install oil seal assembly to piston rod with fitting Installer (925380000) on thread portion of piston rod.

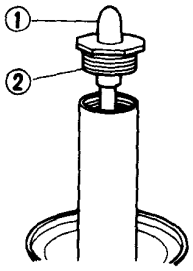

Fig. 9-26 Installing oil seal assembly

NOTE:

a. Apply grease to lip of oil seal.

b. Use genuine grease contained in "seal kit" for respective make of damper strut.

c. When installing oil seal, use special tool (Installer 925380000) without fail to prevent oil seal lip from being damaged.

7) Tighten oil seal assembly by using special tool (Wrench: 925390000)

Torque	98 – 118 N·m (10.0 – 12.0 kg-m, 72 – 87 ft-lb)

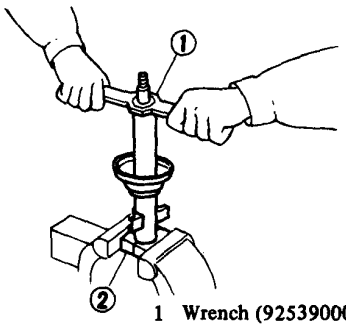

Fig. 9-27 Tightening oil seal assembly

NOTE:

a. Tighten oil seal assembly with piston rod being stretched to its maximum stroke.

b. Use something like wooden block to clamp outer shell not to damage it.

c. Be careful not to damage piston rod.

8) Set damper strut on Puller [included in Puller & Wrench (925651000)], and fit coil spring to spring seat correctly as shown.

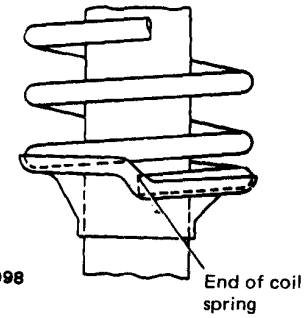

Fig. 9-28 Fitting coil spring

9) Fit hook of Puller near upper end of coil spring, and turn thread of Puller to compress spring enough.

NOTE:

Be careful not to slip off spring.

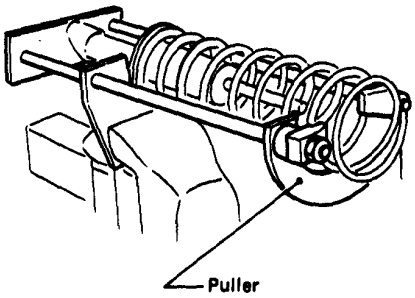

Fig. 9-29 Compressing coil spring

10) Stretch piston rod to its maximum stroke, and install dust cover, upper spring seat and thrust washer.

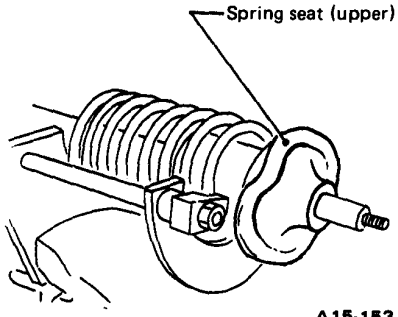

Fig. 9-30

Downloaded from www.Manualslib.com manuals search engine

11) Install washer into oil seal with facing grinded surface of washer to lip side of oil seal.

NOTE:
Apply grease on oil seal lip and sliding surface of washer.

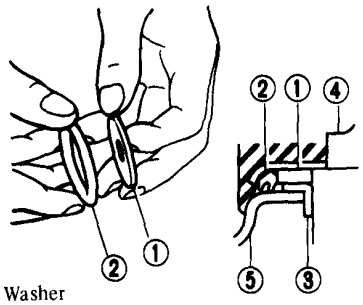

1 Washer
2 Oil seal
3 Thrust washer
4 Piston rod
5 Upper spring seat

A15-100

Fig. 9-31 Installing oil seal etc.

12) Install oil seal and washer assembly on to thrust washer.

NOTE:
Be sure to position oil seal lip to face to coil spring.

13) Install strut mount to piston rod, and tighten self-locking nut temporarily.

NOTE:
Never use removed self-locking nut, and replace it with new one.

14) Loosen Puller [included in Puller & Wrench (925651000)] gradually, and remove it.
15) Tighten self-locking nut by using Wrench [included in Puller & Wrench (925651000)].

Torque	59 – 74 N·m (6.0 – 7.5 kg-m, 43 – 54 ft-lb)

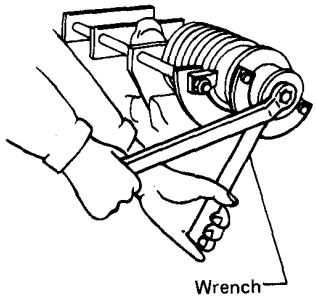

A15-084

Fig. 9-32

4. Installation

1) Set strut assembly in position, and temporarily tighten nuts clamping strut mount to body.

NOTE:
Take care of installing direction of strut mount.

2) Push and set strut into housing gradually and carefully.
3) Tighten two damper strut installing bolts.

Torque	
Bolt installing damper strut bracket to housing	29 – 39 N·m (3.0 – 4.0 kg-m, 22 – 29 ft-lb)
Bolt clamping damper strut to housing	29 – 39 N·m (3.0 – 4.0 kg-m, 22 – 29 ft-lb)

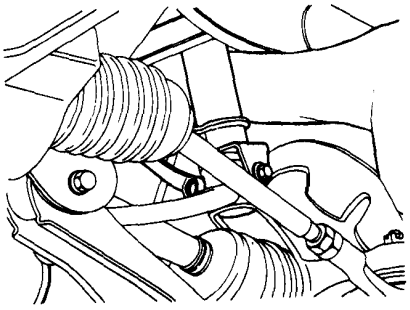

A15-083

Fig. 9-33

4) Securely tighten nuts clamping strut mount to body.

Torque	29 – 39 N·m (3.0 – 4.0 kg-m, 22 – 29 ft-lb)

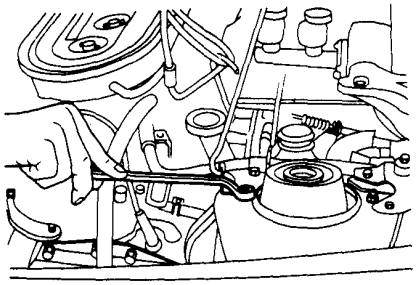

A15-076

Fig. 9-34

5) Clamp brake hose with clip on damper strut.
6) Connect brake hose to caliper body.

Torque (Union bolt)	15 – 20 N·m (1.5 – 2.0 kg-m, 11 – 14 ft-lb)

NOTE:
Always be sure to use flare nut wrench.

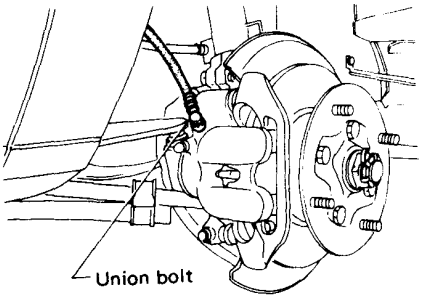

Fig. 9-35

A15-082

7) Connect brake hose to brake pipe at apron bracket.

Torque	12 – 18 N·m (1.2 – 1.8 kg-m, 9 – 13 ft-lb)

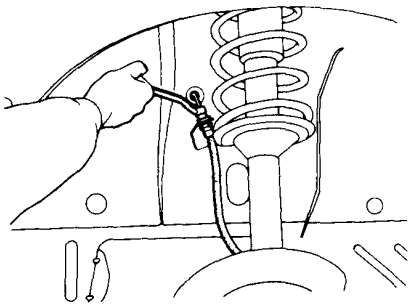

Fig. 9-36

A15-072

8) Install another side damper strut in the same manner.
9) Install tires and wheels, and tighten wheel nuts temporarily.
10) Apply parking brake, and lower vehicle after taking out rigid racks.
11) Tighten wheel nuts.

Torque (Wheel nut)	78 – 98 N·m (8.0 – 10.0 kg-m, 58 – 72 ft-lb)

12) Bleed air from brake system.
13) Connect ground cable to negative terminal of battery.

Downloaded from www.Manualslib.com manuals search engine

9-4. Stabilizer

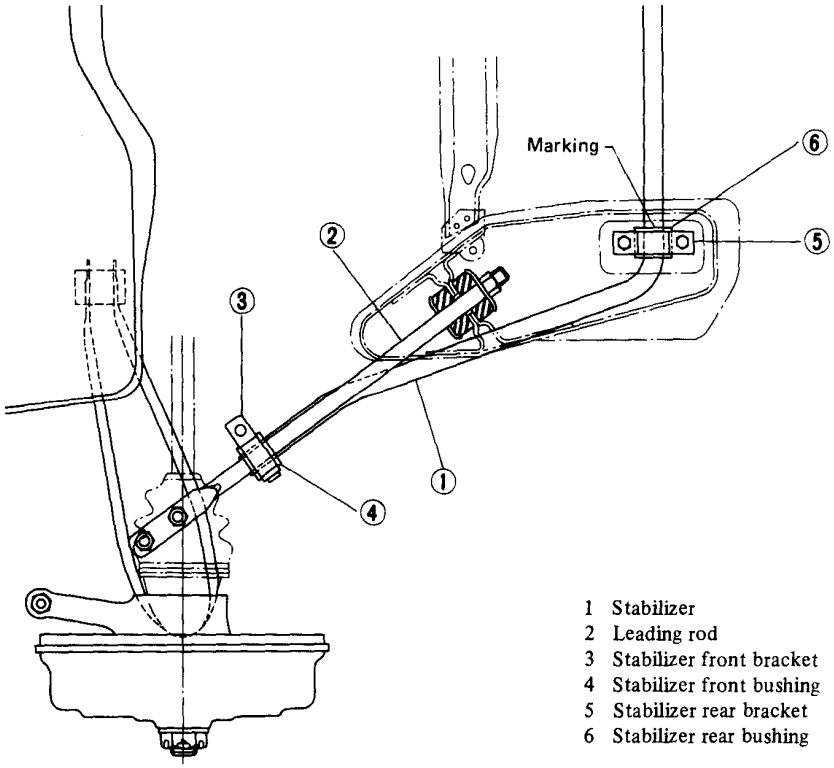

1 Stabilizer
2 Leading rod
3 Stabilizer front bracket
4 Stabilizer front bushing
5 Stabilizer rear bracket
6 Stabilizer rear bushing

A15-160

Fig. 9-37 Stabilizer

1. Removal

1) Jack up body at the front.
2) Remove bolt at stabilizer front bracket.
3) Remove nuts at stabilizer rear bracket.
4) Remove brackets and bushings from stabilizer.
5) Remove stabilizer.

2. Inspection

Check and replace if defective.

1) Bushing

Cracks, deterioration or sticking.

2) Stabilizer

Cracks at curved portions.

3. Installation

Reverse the removal procedure.

NOTE:

a. Stabilizer rear bushing on rear crossmember should be installed by aligning the bushing inner end with the marking on the stabilizer.

b. Each bushing must be fitted firmly and fixed with tires on the ground and with no load on the car.

Torque	
Bolt at front bracket	18 – 31 N·m (1.8 – 3.2 kg-m, 13 – 23 ft-lb)
Nut at rear bracket	18 – 31 N·m (1.8 – 3.2 kg-m 13 – 23 ft-lb)

9-5. Front Crossmember

1. Removal

1) Disconnect ground cable from battery.
2) Apply parking brake, and remove spare tire and wheel.
3) Loosen front wheel nuts.
4) Jack up vehicle, support it with safety stands (rigid racks), and remove front tires and wheels.
5) Release parking brake.
6) Remove air cleaner assembly and pitching stopper rod.

NOTE:
Fit a cap onto carburetor to prevent inside of bore from dust.

7) Remove parking brake cable bracket from transverse link.
8) Remove cotter pin and castle nut of ball stud on tie-rod end, and detach tie-rod from knuckle arm.
9) Remove front exhaust pipe.
10) Remove transverse link from front crossmember.
11) Remove cushion rubber from crossmember.
12) Disconnect steering torque rod from pinion shaft.
13) Lift engine assembly by approx. 10 mm by using chain block.
14) Remove crossmember installing nuts with crossmember supported by jack, and remove crossmember downward gradually along with steering gear box.

Downloaded from www.Manualslib.com manuals search engine

2. Installation

1) Set crossmember along with steering gear box in position and carefully support them with a jack.

NOTE:
Check crossmember for cracks and/or damage, and replace it if necessary.

2) Lower engine assembly by operating chain block.
3) Tighten self-locking nuts connecting steering torque rod and pinion shaft.

Torque	14 – 20 N·m (1.4 – 2.0 kg-m, 10 – 14 ft-lb)

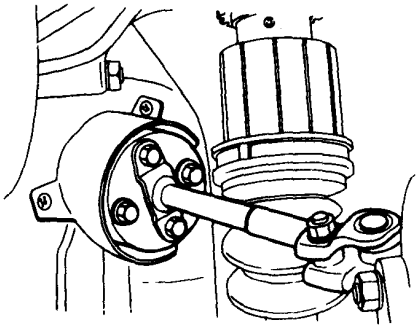

Fig. 9-38 A15-104

4) Tighten nuts attaching engine mount cushion rubber to crossmember.

Torque	20 – 32 N·m (2.0 – 3.3 kg-m, 14 – 24 ft-lb)

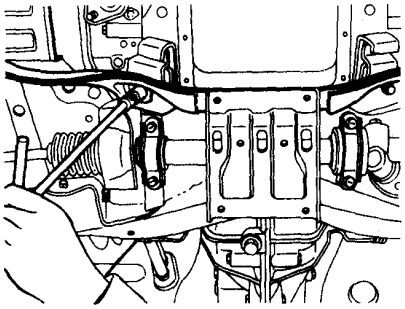

Fig. 9-39 A15-103

5) Connect transverse link to crossmember by temporarily tightening nuts for transverse link bushing.

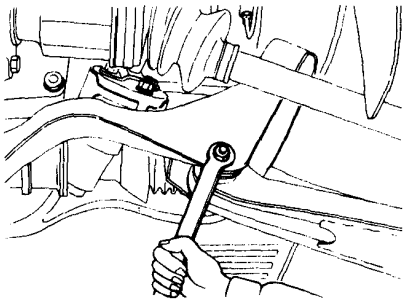

Fig. 9-40 A15-077

6) Install front exhaust pipe.
7) Connect tie-rod end to knuckle arm of housing.

Torque (Castle nut)	25 – 49 N·m (2.5 – 5.0 kg-m, 18 – 36 ft-lb)

8) Connect parking brake cable bracket to transverse link.
9) Attach air cleaner assembly and pitching stopper rod.
10) Install front tires and wheels.
11) Apply parking brake and lower vehicle to the ground.
12) Tighten nut connecting transverse link to crossmember to the specified torque.

Torque	59 – 69 N·m (6.0 – 7.0 kg-m, 43 – 51 ft-lb)

13) Connect ground cable to negative terminal of battery.

9-6. Ball Joint

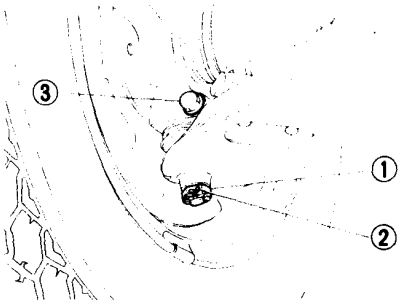

1 Castle nut
2 Cotter pin
3 Bolt

Fig. 9-41 A15-161

1. Removal

1) Jack up body at the front to remove wheels.

2) Remove cotter pin, castle nut and bolt to remove ball joint.

2. Installation

1) Install ball joint onto housing.

Torque (Bolt)	29 – 39 N·m (3.0 – 4.0 kg-m, 22 – 29 ft-lb)

NOTE:
a. Pay attention not to stick grease to tapered portion of ball stud.
b. The ball joint and boot that have been removed must be checked for wear, damage or crack, and any defective part must be replaced.

2) Connect ball joint to transverse link.

Torque (Castle nut)	39 N·m (4.0 kg-m, 29 ft-lb)

3) Retighten castle nut further until a slot in castle nut is aligned with the hole in ball stud end, then insert new cotter pin and bend it around castle nut.
4) Install front wheels, and lower vehicle.

Downloaded from www.Manualslib.com manuals search engine

9-7. Rear Suspension

1. Removal and Disassembly

1) Remove the two bolts attaching shock absorber upper end to body.

NOTE:
a. At this time, vehicle should be in the unloaded condition.
b. Loosen bolts with extension bar supported by tire outer surface, and job will be easy.

2) Apply parking brake.
3) Loosen rear wheel nuts.
4) Jack up vehicle, support it with safety stands (rigid racks) and remove rear wheels and tires.
5) (4WD only) Remove following parts and detach rear drive system.
a. Spring pins at both ends of drive shaft.

NOTE:
Using a steel bar of 6 mm (0.24 in) diameter, gradually drive out spring pins.

b. Rear axle shafts on both sides ——— Remove outer D.O.J. of drive shaft from rear axle spindle by pushing inside D.O.J. of drive shaft fully toward rear differential and pushing brake drum downward. Then remove inner end of drive shaft.
c. Four bolts connecting propeller shaft to rear differential.

NOTE:
Since transmission oil will flow out when propeller shaft is pulled out from transmission, prepare appropriate cap and oil catcher in advance of above job.

d. Propeller shaft ——— Set oil catcher at rear end of transmission, and pull out propeller shaft slowly. To prevent oil flowing out, insert appropriate cap immediately.

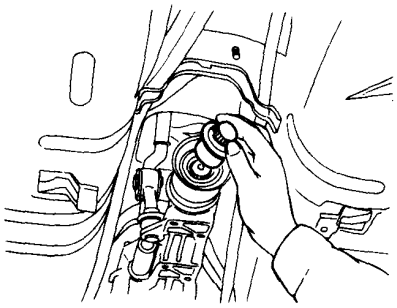

Fig. 9-42

e. Support rear differential with jack.
f. Self-locking nuts connecting rear differential mounting member to body
g. Rear differential ——— Remove 4 nuts installing rear differential at its front end to rear crossmember, and carefully dismount rear differential.
6) Remove exhaust pipe (front and rear).
7) Remove brake hose from brake pipe at inner arm side bracket (on both sides).

NOTE:
a. Insert air bleeder cap to brake hose end to prevent brake fluid from pouring.
b. Whenever removing or installing flare nut, use suitable flare nut wrench only.

8) Support rear crossmember at its center with a jack, and remove four bolts holding rear crossmember.
9) Lower jack gradually and draw out from beneath vehicle body with rear suspension assembly on it.

NOTE:
Put dismounted rear suspension assembly on soft material like rag, corrugated paper, tire etc. to prevent brake backplate and/or brake drum from being damaged.

10) Remove floating bush (except 4WD).
11) Remove shock absorber.
12) Remove outer arm along with torsion bar.

NOTE:
When pulling off outer arm from crossmember, as inner end of torsion bar engages with serration of crossmember, pay attention not to bend or twist torsion bar.

13) Remove torsion bar from outer arm.
14) Remove bolt and nut connecting inner arm and crossmember.

2. Inspection

Inspect disassembled parts for followings.
a. Wear, damage, distorsion, crack etc.
b. All thread for damage or distorsion.
c. Oil leakage at lower portion or oil sealing portion of shock absorber.

NOTE:
If any damages or cracks are not found in visual check, perform color flaw check (dye penetrant investigation) on peeled or corroded portion.

3. Assembly

1) Engage outer serration of torsion bar with outer arm temporarily.

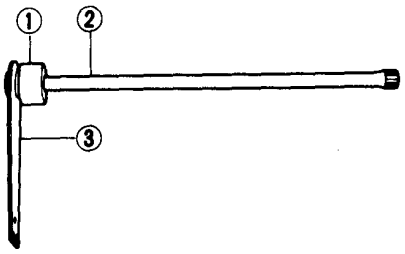

1 Outer bush
2 Torsion bar
3 Outer arm

Fig. 9-43 Installing torsion bar to outer arm

2) Install outer arm along with torsion bar with adjusting engagement of serrations of torsion bar with crossmember and outer arm, so that outer arm comes to appropriate position.

Downloaded from www.Manualslib.com manuals search engine

3) Temporarily lock outer bush with lock bolt.

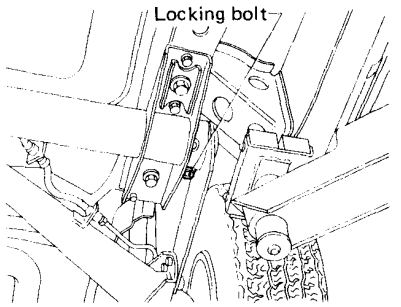

Fig. 9-44 Temporarily locking outer bush

4) Install inner arm to crossmember.

Torque	74 – 93 N·m (7.5 – 9.5 kg-m, 54 – 69 ft-lb)

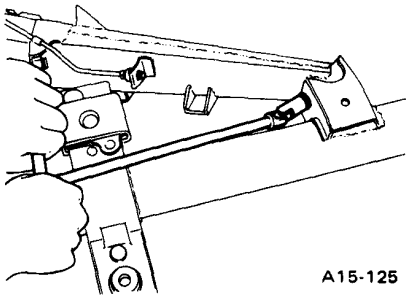

Fig. 9-45 Installing inner arm

5) Connect inner arm and outer arm.

Torque	118 – 147 N·m (12.0 – 15.0 kg-m, 87 – 108 ft-lb)

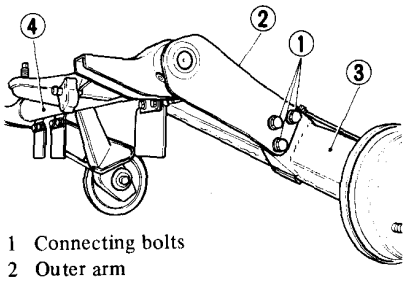

1 Connecting bolts
2 Outer arm
3 Inner arm
4 Crossmember

A15-163

Fig. 9-46 Connecting inner arm and outer arm

6) Install shock absorber to inner arm at lower end of shock absorber.

Torque	88 – 118 N·m (9.0 – 12.0 kg-m, 65 – 87 ft-lb)

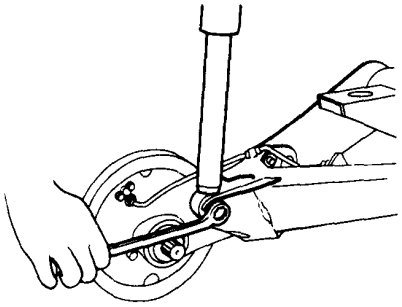

Fig. 9-47 Installing shock absorber

4. Installation

1) Support rear crossmember at its center with a jack, and set it in position.

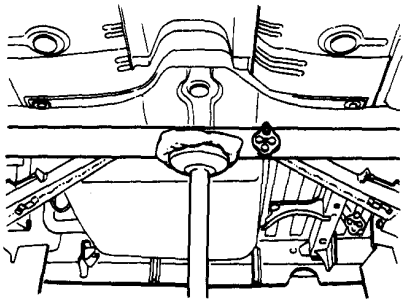

Fig. 9-48 Supporting rear crossmember

NOTE:
When setting crossmember to vehicle body, insert 13 mm (0.51 in) diameter of bar into holes on crossmember bracket and body frame to facilitate the job by aligning the holes.

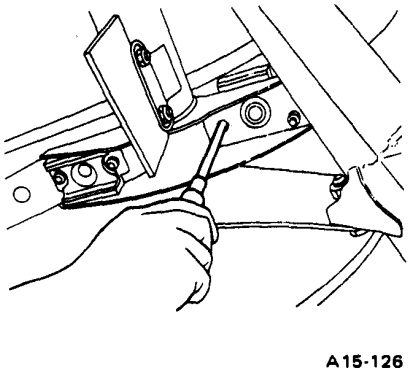

Fig. 9-49 Aligning holes

2) Tighten the four bolts holding rear crossmember at both ends.

Torque	118 – 147 N·m (12 – 15 kg-m, 87 – 108 ft-lb)

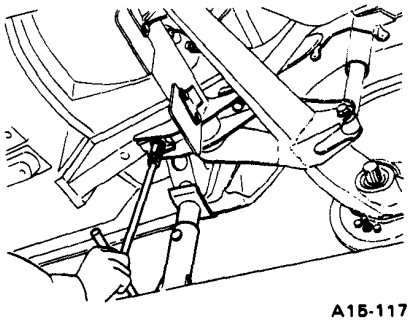

Fig. 9-50

3) Connect brake hose and brake pipe on both sides.

Torque	12 – 18 N·m (1.2 – 1.8 kg-m, 9 – 13 ft-lb)

NOTE:
Use suitable flare nut wrench.

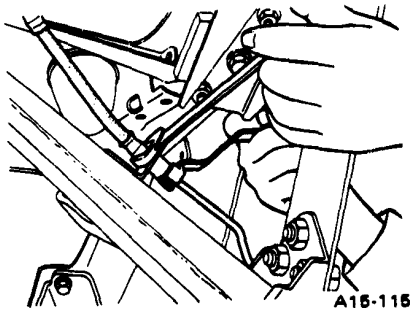

Fig. 9-51

Downloaded from www.Manualslib.com manuals search engine

4) Install exhaust pipe (rear) and muffler in position.

a. All models except 4WD: Tighten bolts connecting exhaust pipe (rear) along with muffler and exhaust pipe (front), and then connect with three cushions.

Torque	42 – 52 N·m (4.3 – 5.3 kg-m, 31 – 38 ft-lb)

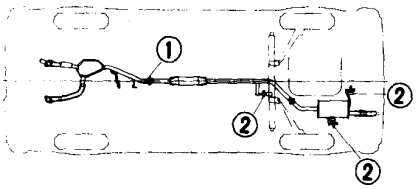

1 Connecting bolt
2 Cushion

Fig. 9-52 A15-112

b. 4WD: Tighten bolts connecting exhaust pipe (rear) and exhaust pipe (front), and exhaust pipe (rear) and muffler.
Then connect with three cushions.

Torque	42 – 52 N·m (4.3 – 5.3 kg-m, 31 – 38 ft-lb)

5) (4WD only) Install rear differential as follows.

a. Set rear differential in position with a jack, and tighten the four nuts.

Torque	69 – 78 N·m (7.0 – 8.0 kg-m, 51 – 58 ft-lb)

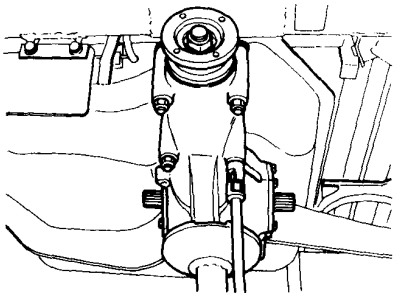

Fig. 9-53 A16-111

b. Connect rear differential mounting member to body.

Torque (Self-locking nut)	69 – 78 N·m (7.0 – 8.0 kg-m, 51 – 58 ft-lb)

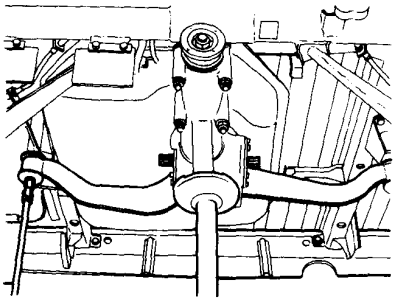

A15-110

Fig. 9-54

c. Insert propeller shaft carefully into rear end of transmission.

d. Install propeller shaft onto rear differential.

Torque	18 – 25 N·m (1.8 – 2.5 kg-m, 13 – 18 ft-lb)

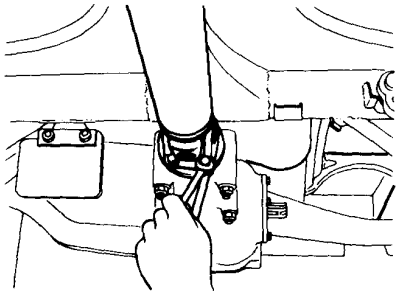

Fig. 9-55 A4-123

e. Insert rear drive shafts on both sides onto rear axle spindle and rear differential.

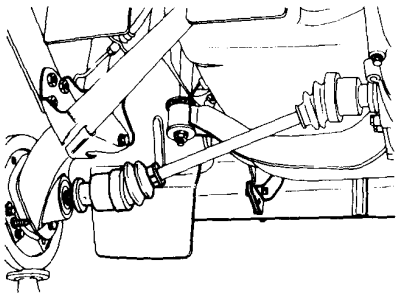

Fig. 9-56 A15-109

f. Drive spring pins in at both ends of drive shaft gradually by using 6 mm (0.24 in) dia. steel bar.

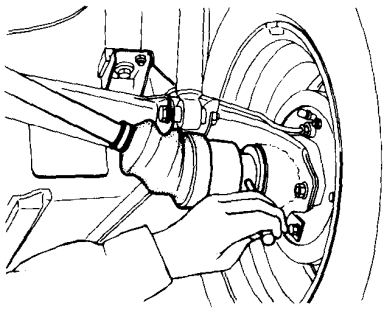

A15-108

Fig. 9-57

6) Install front tires and wheels by temporarily tightening wheel nuts.

7) Lower vehicle after taking out safety stands (rigid racks).

8) Tighten wheel nut firmly.

Torque	78 – 98 N·m (8.0 – 10.0 kg-m, 58 – 72 ft-lb)

9) Connect shock absorber upper end to body on each side with vehicle unloaded.

Torque	88 – 127 N·m (9.0 – 13.0 kg-m, 65 – 94 ft-lb)

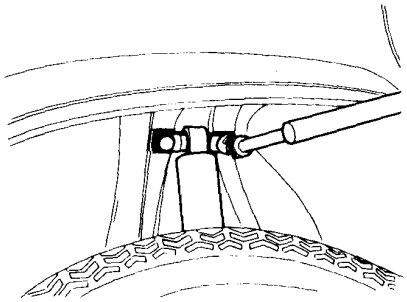

A15-107

Fig. 9-58

10) Tighten outer bushing lock bolts with vehicle unloaded.

Torque	31 – 39 N·m (3.2 – 4.0 kg-m, 23 – 29 ft-lb)

Downloaded from www.Manualslib.com manuals search engine

11) Always be sure to check and adjust the following:
a. Air bleeding of brake system
b. Rear vehicle height
c. Rear wheel alignment

5. Inner Bush

1) Removal

Remove inner bush using Bush installer (921390000) as follows.
1) Set inner arm boss end on base ②.
2) Fit shank ① to outer tube of inner bush.
3) Remove bush by using a press.

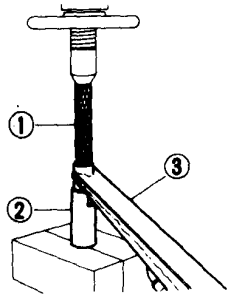

1 Shank
2 Base
3 Inner arm

A15-129

Fig. 9-59 Removing inner bush

2) Inspection

Check for crack and damage, and replace if defective.

3) Installation

1) Set inner arm on the press bed through base of installer and supporter as shown so that axis of bore of inner arm becomes vertical.

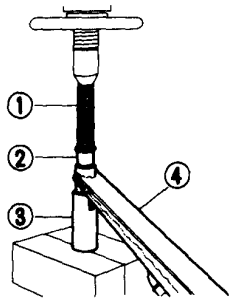

1 Shank
2 Inner bush
3 Base
4 Inner arm

A15-132

Fig. 9-60 Setting inner arm on press

2) Set inner bush and shank to bore of inner arm.
3) Press bush into bore until end surface of outer tube of inner bush corresponds to upper end of boss of inner arm.

6. Torsion Bar and Center Arm

NOTE:
Center arm is adopted on 4WD models only.

1) Removal

1) To remove torsion bar, remove outer arm along with torsion bar from dismounted rear suspension assembly.

NOTE:
When disengagement of torsion bar from inner serration of crossmember is difficult, tap outer end of opposite torsion bar with wooden hammer, and the torsion bar and outer arm can be removed.

2) For 4WD model
Center arm can be taken out of crossmember, after two torsion bars in both sides of crossmember are removed.

2) Inspection

Check removed torsion bars and center arm for crack at its peeled and/or corroded portion by means of visual check and color flaw check.
1) If any flaw is found, replace it with new one.
2) If no defect is found, touch up it with black paint after rasping.

3) Installation

1) Apply grease to inner serration and outer serration of torsion bar.
2) For 4WD models, insert center arm into crossmember.
3) Insert torsion bar engaged with outer arm into crossmember, and engage it with inner serration of crossmember or center arm.

NOTE:
Do not confuse a torsion bar with another one.
Confusion between R.H. one and L.H. one will result early breakage of them.
When installing torsion bars, confirm color of paint (R.H. – yellow, L.H. – green) on outer end of torsion bar.

Downloaded from www.Manualslib.com manuals search engine

9-8. Adjustment of Posture (4WD Models Only)

Ground clearances of front and rear suspensions of 4WD vehicles can be adjusted according to the following procedure.

NOTE:

a. Before adjusting the vehicle posture, check air pressure of the all tires and adjust to the specified pressure if necessary.

b. Place the vehicle under unloaded condition on the flat ground.

1. Front Posture Adjustment

Vehicles		Specified ground clearance "h"	Maximum adjustable height
2-door Hatchback 4WD	STD	265 – 290 mm (10.43 – 11.42 in)	only upward 25 mm (0.98 in)
	GL	270 – 295 mm (10.63 – 11.61 in)	
Station Wagon 4WD & Brat	DL	265 – 290 mm (10.43 – 11.42 in)	
	GL	270 – 295 mm (10.63 – 11.61 in)	

1) Check the ground clearance by measuring between front end of transverse link attaching bolt and ground.

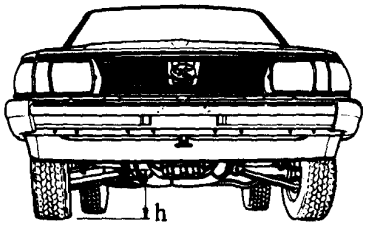

A15-130

Fig. 9-61

2) If "h" dimension is out of the specified range in the above table, adjust "h" dimension according to following method.

3) Front posture is adjusted by turning four (4) adjusting nuts on the both sides of the struts.

NOTE:

a. When turning the adjusting nuts, turn the both nuts on one side of the strut by the same times.

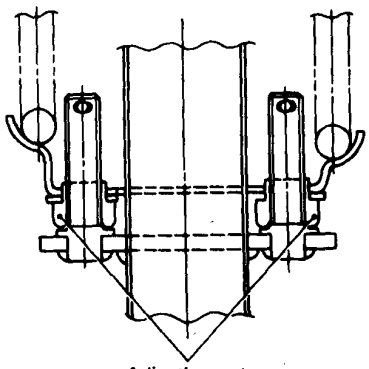

A15-062

Fig. 9-62

b. Check and/or adjust the toe-in of front wheels to the specified value after turning the adjusting nuts of front strut.

2. Rear Posture Adjustment

Vehicles		Specified ground clearance "H"	Maximum adjustable height
2-door Hatchback 4WD	STD	320 – 340 mm (12.60 – 13.39 in)	only upward 30 mm (1.18 in)
	GL	325 – 345 mm (12.80 – 13.58 in)	
Station Wagon 4WD & Brat	DL	335 – 355 mm (13.19 – 13.98 in)	
	GL	340 – 360 mm (13.39 – 14.17 in)	

1) Measure height of crossmember pipe lowest point from the ground. ("H" dimension).

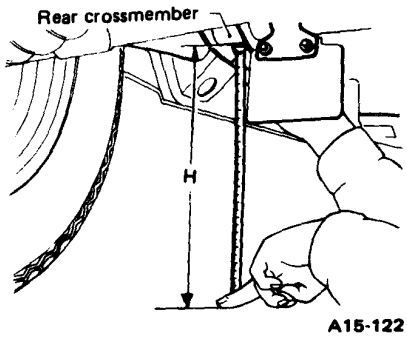

A15-122

Fig. 9-63 Measuring "H" dimension

Downloaded from www.Manualslib.com manuals search engine

2) If "H" dimension is out of the specificed range in the above table, adjust "H" dimension according to following method.
3) To adjust rear posture, turn adjusting bolt from service hole provided on vehicle floor.

Turning to clockwise increases vehicle height and turning to counterclockwise decreases it.

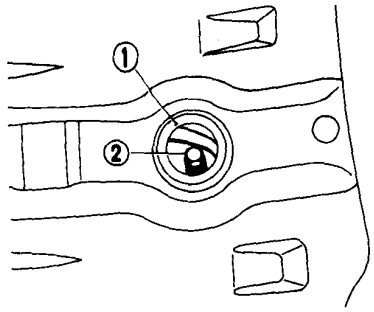

1 Service hole on vehicle floor
2 Adjusting bolt of center arm [width across flats; 19 mm (0.75 in)]

A15-102

Fig. 9-64

9-9. Adjustment of Rear Road Clearance

Rear road clearance can be adjusted also by changing engagement of inner and outer serrations of torsion bar.
Since numbers of teeth of inner and outer serrations are 37 and 34 respectively and distance between torsion bar center and wheel center is approx. 400 mm (15.75 in), shifting the matching of inner or outer serration by one pitch causes change in rear road clearance by 68 mm or 74 mm (2.68 or 2.91 in) respectively.
Therefore, by shifting the matchings of inner and outer serrations in opposite directions, various adjustments can be made.
Adjustment with rear suspension mounted on the vehicle can be made as follows.
1) Measure rear road clearance, and determine numbers of teeth to be shifted on inner and/or outer serrations.
2) Remove the bolt which attaches shock absorber to the body at the top of shock absorber.
3) Jack up the vehicle body and remove wheels.
4) Remove lock bolt of outer bushing.
5) Remove three bolts connecting outer arm and inner arm, with brake drum supported by a jack or the like to prevent brake hose from damage.
6) Mark on outer bushing, crossmember and torsion bar so as to identify their original positions.
7) Measure vertical distance between end of outer arm and vehicle body.
8) Pull out outer arm together with torsion bar until inner serration is disengaged completely.
9) Rotate torsion bar and outer arm to shift matching of inner serration by appropriate pitches, and engage inner serration with crossmember.
10) Pull out outer arm from torsion bar, and rotate outer arm to opposite direction to shift matching of outer serration by appropriate pitches.

NOTE:
Pay attention not to disengage inner serration of torsion bar from crossmember.

11) Install outer arm to trosion bar and crossmember, and then measure in the same manner as step 7).

Change in this distance shows a half of change in rear road clearance caused by adjustment.
12) Connect outer arm and inner arm by installing three bolts.
13) Carry out same work on the other wheel.
14) Install wheels, and put the vehicle down on the ground.
15) Install shock absorber to vehicle body.
16) Install lock bolt of outer bushing.
17) Confirm that rear road clearance is properly adjusted.

Downloaded from www.Manualslib.com manuals search engine

●WHEELS AND AXLES

9-10. Component Parts

● Front Axle

Tightening torque N·m (kg-m, ft-lb)
T1: 196 (20, 145)
T2: 6 – 14 (0.6 – 1.4, 4.3 – 10.1)

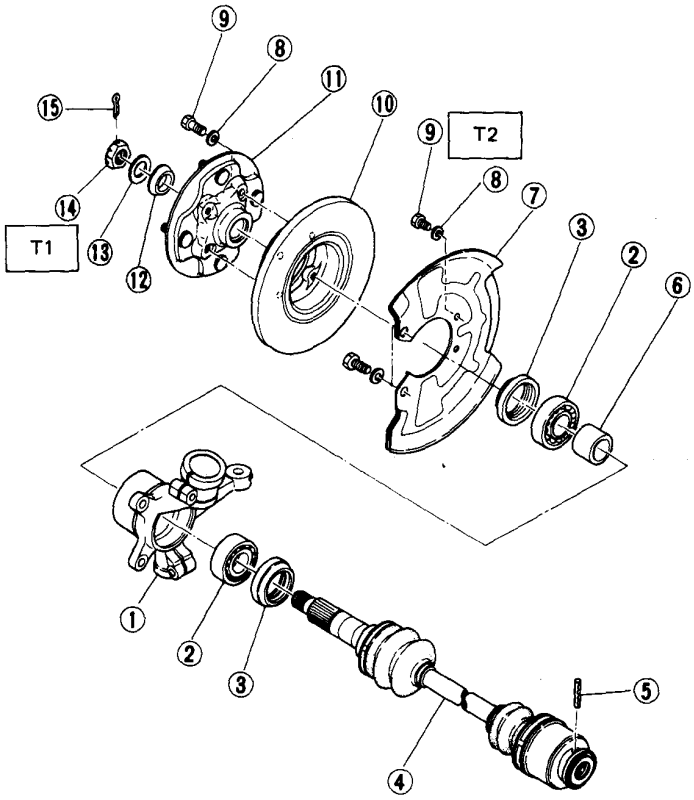

1 Housing
2 Bearing
3 Oil seal
4 Axle shaft assembly
5 Spring pin
6 Spacer
7 Disc cover
8 Spring washer
9 Bolt
10 Disc rotor
11 Hub complete
12 Center piece
13 Washer spring
14 Axle nut
15 Cotter pin

Fig. 9-65 Component parts of front axle

A16-147

● Rear Axle

1. Except 4WD

Tightening torque N·m (kg-m, ft-lb)
T: 78 – 98 (8.0 – 10.0, 58 – 72)

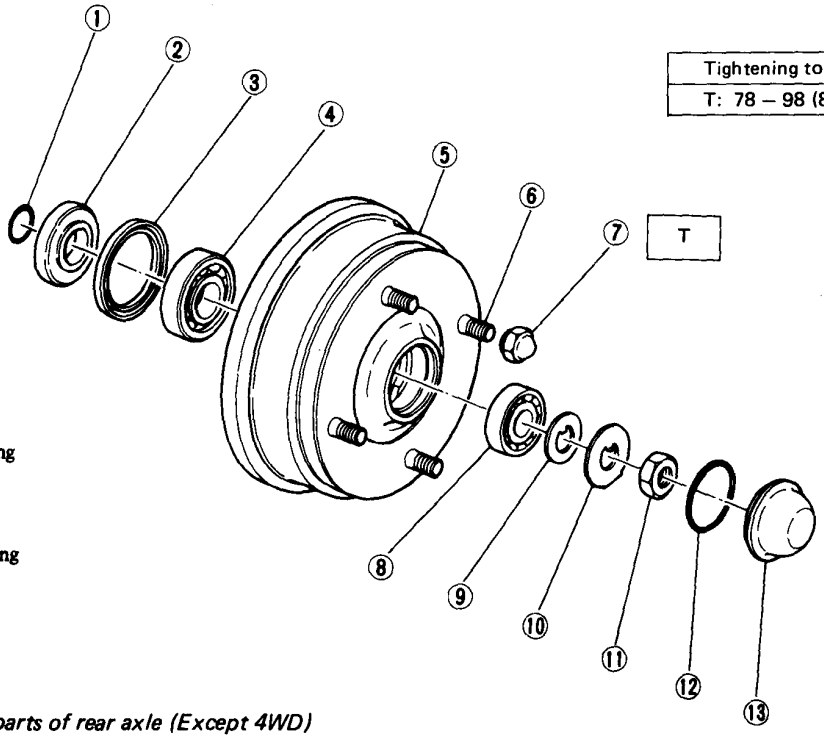

1 Spacer O-ring
2 Oil seal spacer
3 Oil seal
4 Inner taper roller bearing
5 Brake drum complete
6 Hub bolt
7 Wheel nut
8 Outer taper roller bearing
9 Lock plate
10 Lock washer
11 Axle nut
12 O-ring
13 Cap

Fig. 9-66 Component parts of rear axle (Except 4WD)

A16-148

Downloaded from www.Manualslib.com manuals search engine

2. 4WD

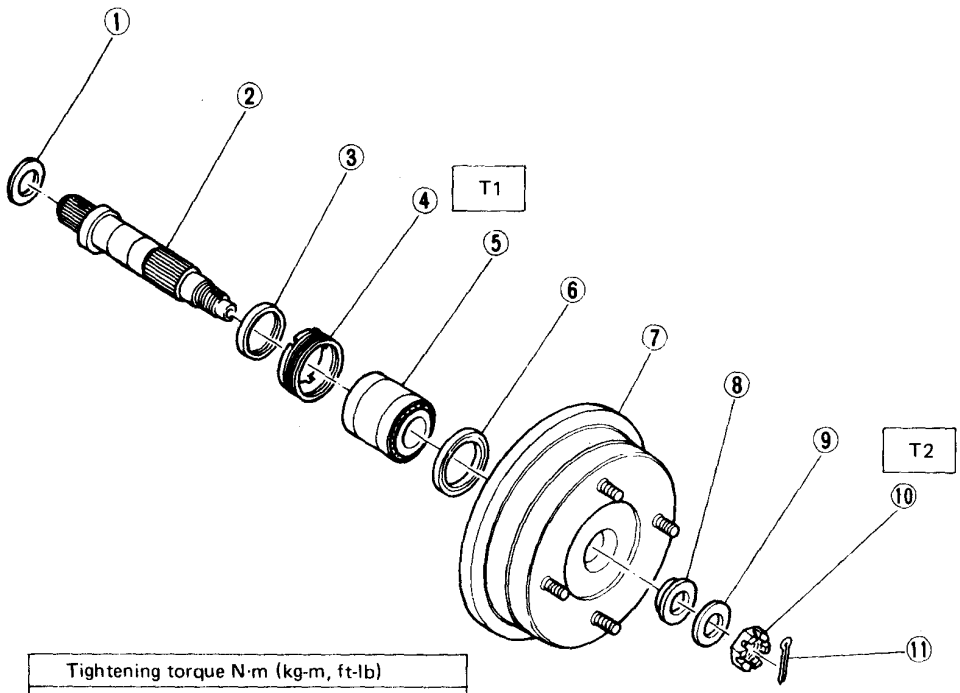

1 Packing
2 Rear spindle
3 Inner oil seal
4 Ring nut
5 Bearing assembly
6 Outer oil seal
7 Brake drum complete
8 Center piece
9 Spring washer
10 Axle nut
11 Cotter pin

Tightening torque N·m (kg-m, ft-lb)
T1: 172 – 221 (17.5 – 22.5, 127 – 163)
T2: 196 (20, 145)

A16-149

Fig. 9-67 Component parts of rear axle (4WD)

9-11. Housing

1. Removal

1) Disconnect ground cable from battery.
2) Apply parking brake.
3) Remove front wheel cap and cotter pin, and loosen castle nut and wheel nuts.
4) Jack up vehicle, support it with safety stands (rigid racks), and remove front tires and wheels.
5) Release parking brake.
6) Disconnect parking brake cable from brake caliper.
7) Remove disc brake assembly from housing, and hang it from a strut with string.

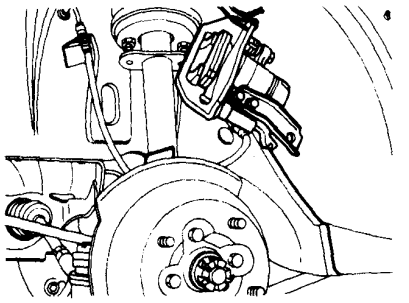

A16-152

Fig. 9-68 Removing brake ASSY

8) Remove two damper strut installing bolts.
9) Remove cotter pin and castle nut, and disconnect ball stud from knuckle arm by using a puller.
10) Remove ball stud connecting transverse link with housing.
11) Disconnect strut from housing by opening slit of housing and by lowering housing gradually with care of not damaging C.V.J. boot.

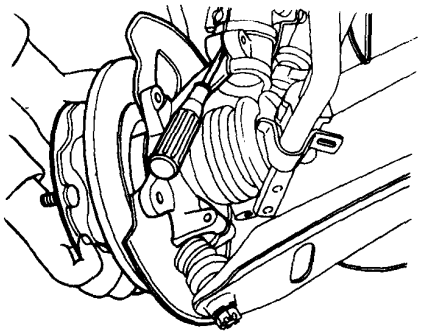

A16-156

Fig. 9-69 Removing strut

Downloaded from www.Manualslib.com manuals search engine

12) Remove castle nut on axle shaft, and take out disc and hub assembly.
13) Remove disc cover.
14) Pull housing off axle shaft.

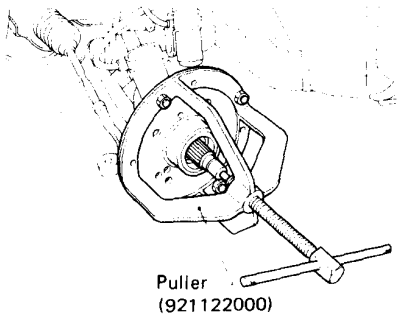

Fig. 9-70 Removing housing

2. Disassembly

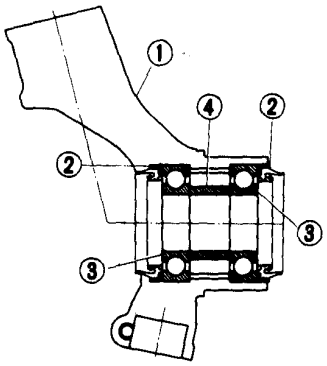

1 Housing
2 Oil seal
3 Bearing
4 Spacer

Fig. 9-71 Bearing, spacer and oil seal

1) Move up or down spacer by finger.
2) Apply an aluminum bar or a brass bar to the inside surface of inner race of outer bearing.
Lightly knock the bar by a plastic hammer to drive bearing out of housing together with oil seal.

NOTE:

a. Do not knock the bearing by a hard material, otherwise the bearing will be damaged.

b. When knocking the bearing, be careful to apply the bar on all around the inner race.

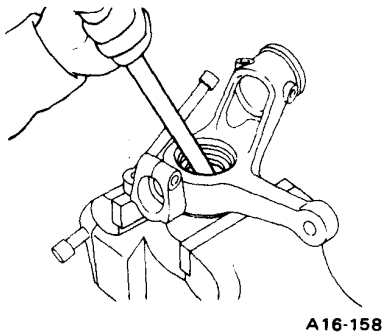

Fig. 9-72 Removing outer bearing

3) Pull out spacer.
4) Apply an aluminum bar or a brass bar to the inside surface of outer race of inner bearing.
Lightly knock the bar by a plastic hammer to drive bearing out of housing together with oil seal.

NOTE:

a. When knocking the bearing, be careful to apply the bar on all around the outer race.

b. Do not reuse the oil seal.

3. Assembly

Press is necessary in assembling.
1) Set housing on Die (Installer: 925140000).
2) Set bearing onto Punch (Installer: 925140000) and gradually press it into housing till outer race of bearing comes to contact with stopper.

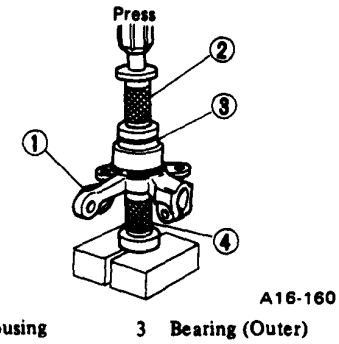

1 Housing
2 Punch
3 Bearing (Outer)
4 Die

Fig. 9-73 Press-in of bearing

3) Turn upside down housing, and apply about 10 to 13 g (0.35 to 0.46 oz) of bearing grease into inside of housing.
4) Insert spacer.

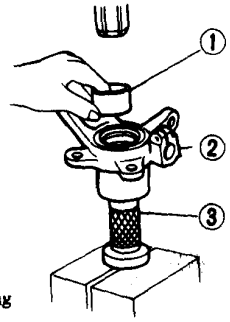

1 Spacer
2 Housing
3 Die

Fig. 9-74 Inserting the spacer

5) The other bearing is pressed in as shown in figure.

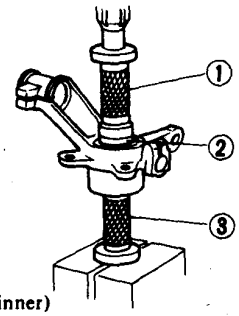

1 Punch
2 Bearing (inner)
3 Die

Fig. 9-75 Press-in of bearing

6) Set housing on Die.
Apply sufficient grease on the lip of the inside of oil seal.
7) Insert oil seal into the groove of Punch so that the oil seal lip faces the groove, and gradually press it into housing till the face of Punch comes to contact with bearing outer race.

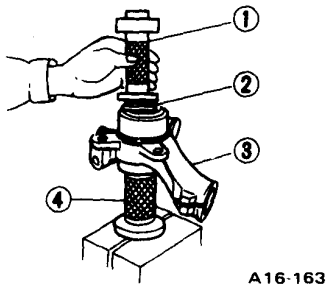

1 Punch
2 Oil seal (Outer)
3 Housing
4 Die

Fig. 9-76 Press-in of oil seal

Downloaded from www.Manualslib.com manuals search engine

8) Turn upside down housing and set it on Die turned upside down also.
9) Insert oil seal into the groove of Punch so that the oil seal lip faces the groove, and gradually press it into housing.

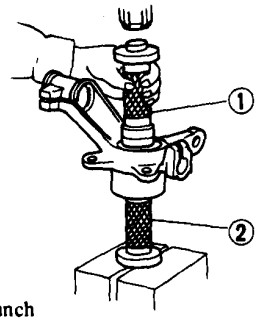

1 Punch
2 Die

A16-164

Fig. 9-77 Press-in of oil seal

4. Installation

1) Fit housing onto axle shaft and attach spacer of Installer (925130000) on outer bearing inner race taking care not to damage the oil seal lip.
Then, connect the rod of Installer to the thread of axle shaft so that housing does not drop off from axle shaft.
2) Install transverse link ball stud to housing.

Torque	29 – 39 N·m (3.0 – 4.0 kg-m, 22 – 29 ft-lb)

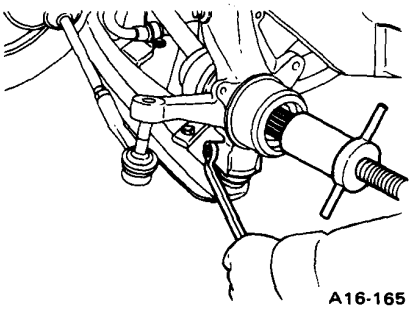

A16-165

Fig. 9-78 Installing transverse link ball stud

3) Turn the handle while holding the rod end by means of spanner, thus housing is pushed in.

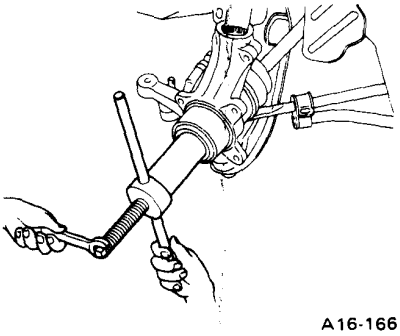

A16-166

Fig. 9-79 Installing housing

4) Connect damper strut and housing by installing two bolts.

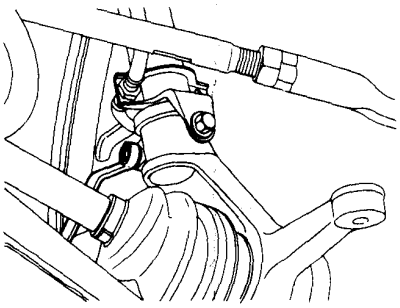

A16-167

Fig. 9-80 Installing damper strut

Torque	29 – 39 N·m (3.0 – 4.0 kg-m, 22 – 29 ft-lb)

5) Connect tie-rod end and housing knuckle arm.

Torque (Castle nut)	25 – 29 N·m (2.5 – 3.0 kg-m, 18 – 22 ft-lb)

After tightening to the specified torque, further tighten castle nut within 60° to align holes of castle nut and ball stud.
Then insert cotter pin into ball stud and bend it around castle nut.
6) Install disc cover to housing with one bolt.

Torque	6 – 14 N·m (0.6 – 1.4 kg-m, 4.3 – 10.1 ft-lb)

7) Install disc and hub ASSY onto axle shaft.
8) Install brake ASSY to housing by two bolts.

Torque	49 – 69 N·m (5.0 – 7.0 kg-m, 36 – 51 ft-lb)

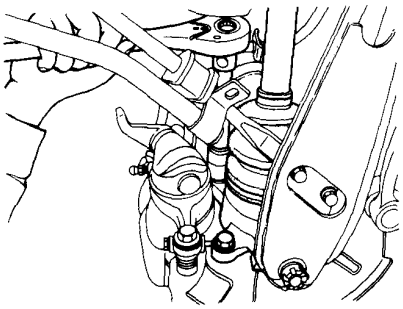

A16-168

Fig. 9-81 Installing brake ASSY

9) Connect hand brake cable to brake ASSY.

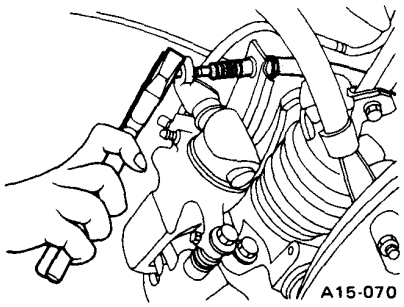

A15-070

Fig. 9-82

10) Apply hand brake.
11) Fit center piece, conical spring washer and axle nut in this order onto front axle shaft and tighten castle nut to the specified torque, then insert a new cotter pin and bend it around axle nut.

Downloaded from www.Manualslib.com manuals search engine

NOTE:
After tightening the nut to the specified torque, retighten further within 30° until a slot of the castle nut is aligned to the hole in the axle shaft.

Torque	196 N·m (20 kg-m, 145 ft-lb)

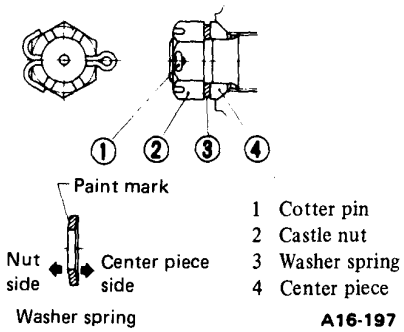

Fig. 9-83 Installing axle nut

12) Install wheels and wheelcaps.
13) Put down vehicle from rigid racks.
14) Connect ground cable with negative terminal of battery.

NOTE:
Connect leading rod to transverse link if it was disconnected on removal.

9-12. Front Axle Shaft

1. Removal

1) Disconnect ground cable from battery.
2) Apply parking brake.
3) Remove front wheel cap and cotter pin, and loosen castle nut and wheel nuts.
4) Jack up vehicle, support it with safety stands (rigid racks), and remove front tires and wheels.
5) Release parking brake.
6) Remove parking brake cable bracket from transverse link.
7) Drive out spring pin of D.O.J.
8) Remove disc brake assembly, and disconnect tie-rod, transverse link and damper strut.
9) Remove axle shaft from differential spindle along with housing.
10) Remove housing from axle shaft by using Puller (921122000).

2. Disassembly

1) Straighten bent claw of larger end of D.O.J. boot.
2) Loosen band by means of screwdriver or plier with care of not damaging boot.

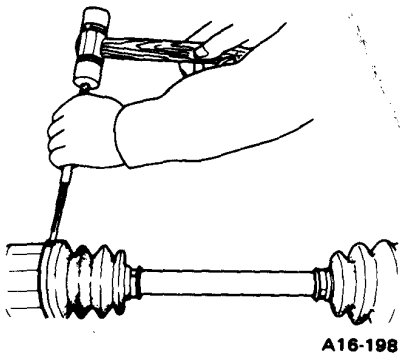

Fig. 9-84 Removing boot band

3) Remove boot band on the small end of D.O.J. boot in the same manner.
4) Remove the larger end of D.O.J. boot.
5) Pry and remove round circlip located at the neck of D.O.J. outer race with a screwdriver.

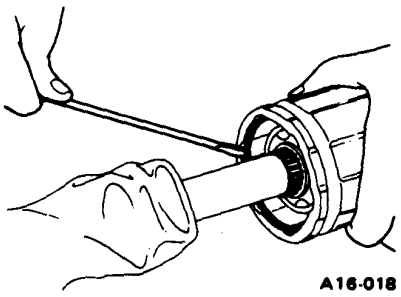

Fig. 9-85 Removing circlip

6) Take out D.O.J. outer race from shaft ASSY.
7) Wipe off grease and take out balls and move cage to the boot side.

NOTE:
a. To remove the cage from the inner race turn the cage by a half pitch to the track groove of the inner race and shift the cage.
b. Disassemble exercising care not to lose balls (6 pcs).
c. The grease is a special grease (grease for constant-velocity joint). Do not confuse with other greases.

8) Remove C-type snap ring, which fixes inner race to shaft, by using special pliers.
9) Take out D.O.J. inner race.
10) Take off D.O.J. cage from shaft and remove D.O.J. boot with care of not damaging it.
11) Pull out C.V.J. boot.
12) Thus, disassembly of axle is completed, but C.V.J. is unable to be disassembled.

3. Inspection

Check the removed parts for damage, wear, corrosion and etc.
If faulty, repair or replace.

Downloaded from www.Manualslib.com manuals search engine

1) D.O.J. (Double Offset Joint)
Check seizure, corrosion, damage, wear and excessive play.
2) Shaft
Check excessive bending, twisting, damage and wear.
3) C.V.J. (Constant Velocity Joint)
Check seizure, corrosion, damage and excessive play.
4) Boot
Check wear, warping and breakage.

4. Assembly

NOTE:
Use specified grease.

Specified grease for constant velocity joint
Molylex No. 2 (P/N 623029980)

1) Install C.V.J. boot in specified position, and fill it with 60 to 70 g (2.12 to 2.47 oz) of specified grease.
Also fill the interior of C.V.J. outer race with approx. 60 g (2.12 oz) of specified grease while yawing the joint.
2) Place D.O.J. boot at the center of shaft.
3) Insert D.O.J. cage onto shaft.

NOTE:
Insert the cage with the recess facing the outside, since the cage has an orientation.

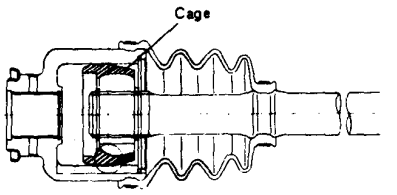

Fig. 9-86 Cage of D.O.J.

4) Install D.O.J. inner race on shaft and fit C-type snap ring with special pliers.

NOTE:
Confirm that the C-type snap ring is completely fitted in the shaft groove.

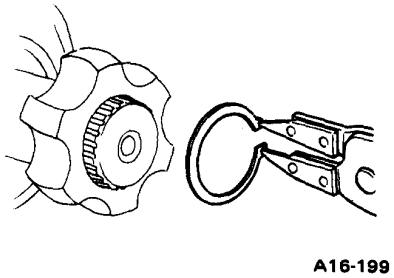

Fig. 9-87

5) Install cage, which was previously fitted, to inner race fixed upon shaft.

NOTE:
a. Fit the cage with the protruded part aligned with the track on the inner race and then move by a half pitch.
b. Apply the specified grease 20 to 30 g (0.71 to 1.06 oz) on the cage pocket.

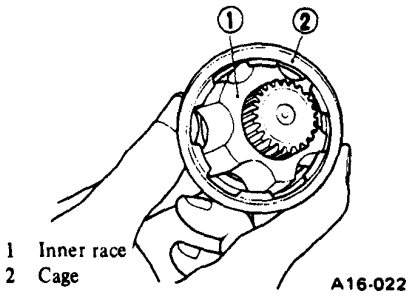

Fig. 9-88 Installing cage

6) Insert six balls into the cage pocket.
7) Fill 20 to 30 g (0.71 to 1.06 oz) of specified grease into the interior of D.O.J. outer race.
8) Align the outer race track and ball positions and place in the part where shaft, inner race, cage and balls are previously installed, and then fit outer race.

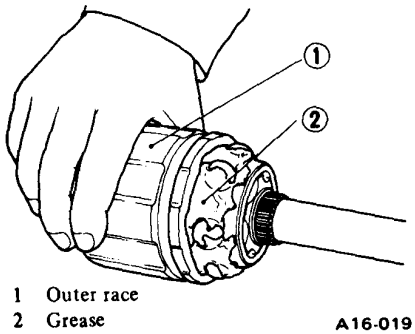

Fig. 9-89 Inserting outer race

9) Install circlip in the groove on D.O.J. outer race.

NOTE:
a. Assure that the balls, cage and inner race are completely fitted in the outer race of D.O.J.
b. Exercise care not to place the matched position of circlip in the ball groove of outer race.
c. Pull the shaft lightly and assure that the circlip is completely fitted in the groove.

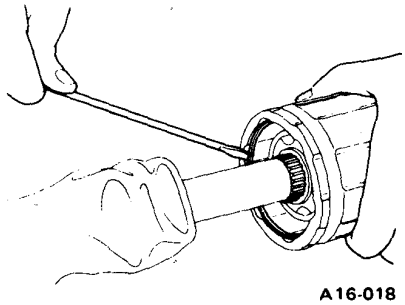

Fig. 9-90 Installing circlip

10) Add 20 to 30 g (0.71 to 1.06 oz) of specified grease to the D.O.J.'s interior.
11) Fill the boot interior with 20 to 30 g (0.71 to 1.06 oz) of specified grease. Also apply grease on the shaft area.
12) Install boots on D.O.J.

NOTE:
a. The boot grooves shall be cleaned so as to be free from grease and other substance.
b. When installing D.O.J. boot, position outer race of D.O.J. at center of its travel.

13) Put a band through the clip and wind twice in alignment with band groove of boots.

NOTE:
Use a new band.

14) Pinch the end of band with pliers. Hold the clip and tighten securely.

NOTE:
When tightening boot, exercise care so that the air within the boot is appropriate.

15) Tighten band by using Band Tightening Tool (925091000).

Downloaded from www.Manualslib.com manuals search engine

NOTE:

a. Tighten band until it cannot be moved by hand.

b. Former Band Tightening Tool (925090000) is interchangeable with this 925091000.

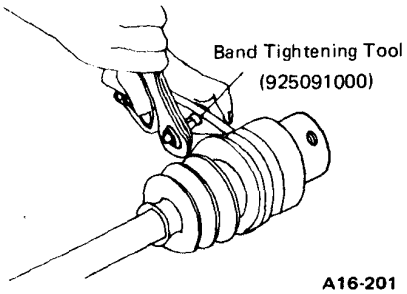

Fig. 9-91 Installing boot band

15) Tap on the clip with the punch provided at the end of Band Tightening Tool.

NOTE:

Tap to an extent that the boot underneath is not damaged.

16) Cut off band with an allowance of about 10 mm (0.39 in) left from the clip and bend this allowance over the clip.

17) Fix up boot on C.V.J. in the same manner.

5. Installation

1) Insert axle shaft into housing and attach spacer of Installer (925130000) on outer bearing inner race taking care not to damage the oil seal lip.

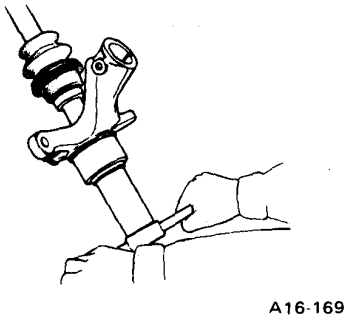

Fig. 9-92 Installing axle shaft

2) Connect the rod of Installer to the thread of axle shaft and turn the handle while holding the rod end by means of a spanner, thus axle shaft is pulled in.

3) Align the spring pin holes of D.O.J. and differential spindle.

4) Connect D.O.J. and differential spindle by driving spring pin in.

NOTE:

a. Make sure that the holes are aligned before driving the spring pin in.

b. When driving the spring pin, always use new one.

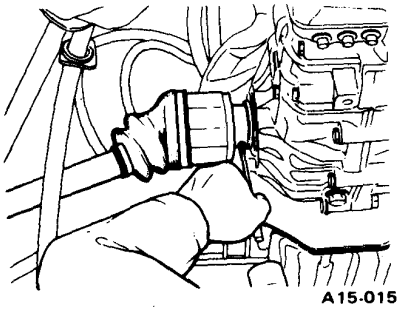

Fig. 9-93 Driving spring pin in

5) Connect damper strut to housing, and tighten two bolts.

Torque	29 – 39 N·m (3.0 – 4.0 kg-m, 22 – 29 ft-lb)

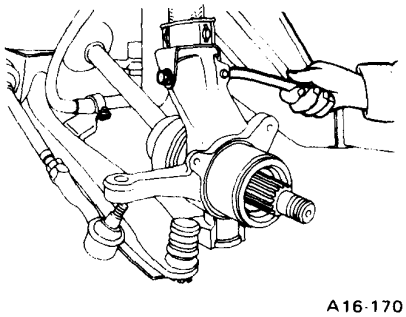

Fig. 9-94 Connecting damper strut

6) Install disc cover on housing with one bolt.

Torque	6 – 14 N·m (0.6 – 1.4 kg-m, 4.3 – 10.1 ft-lb)

7) Install hub and disc ASSY to axle shaft.

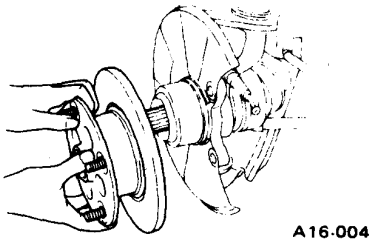

Fig. 9-95 Installing disc hub

8) Install or connect disc brake ASSY, hand brake cable, center piece, conical spring washer, axle nut, cotter pin, brake hose, tie rod and transverse link according to the same procedure of "9-11 Housing – 4. Installation".

9) Install wheels and tighten wheel nuts.

10) Install wheel caps in position.

11) Put down vehicle from rigid racks.

12) Connect ground cable with negative terminal of battery.

Downloaded from www.Manualslib.com manuals search engine

9-13. Replacement of D.O.J./D.O.J. Boot of Front Axle Shaft

1. Replacement

1) Release parking brake and raise vehicle using recommended lifting points.
2) Disconnect oxygen (O_2) sensor cord.
3) Remove front exhaust pipe.
a. Loosen nuts which connect front exhaust pipe to engine and hold its flanges loosely on engine.

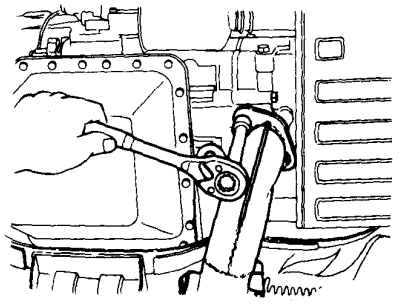

Fig. 9-96 Removing front exhaust pipe from engine

b. Disconnect front exhaust pipe from rear exhaust pipe and bracket.

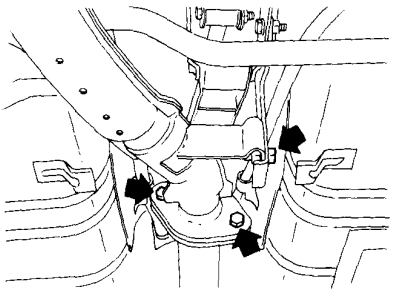

Fig. 9-97

c. Remove front exhaust pipe.
4) Separate transverse link from crossmember by removing the fixing bolt.
5) Drive out spring pin which secures D.O.J. to axle drive shaft and pull out D.O.J. by hand.

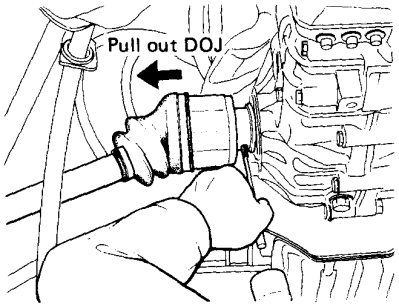

Fig. 9-98 Separating D.O.J. from axle drive shaft

6) Raise the staked ends of boot band on both the large and small ends of D.O.J. boot with a screwdriver and remove bands.

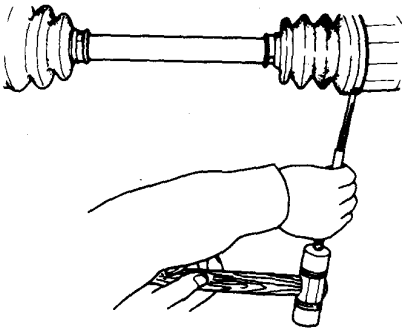

Fig. 9-99 Removing D.O.J. boot bands

7) Slide out the large end of boot from D.O.J. outer race and pry out circlip from the groove near the D.O.J. opening.

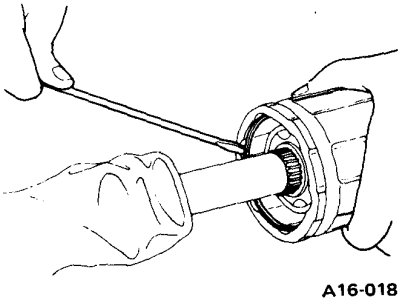

Fig. 9-100 Removing D.O.J. circlip

8) Pull out D.O.J. outer race from axle shaft ASSY.

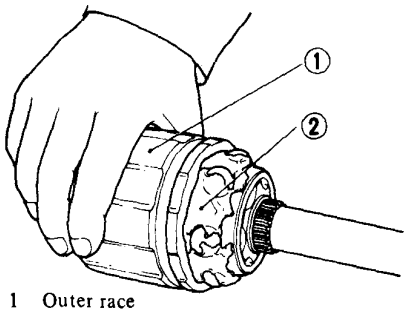

1 Outer race
2 Grease

Fig. 9-101

9) Remove snap ring which secures D.O.J. inner race on axle shaft ASSY with special pliers and pull out inner race from axle shaft ASSY.

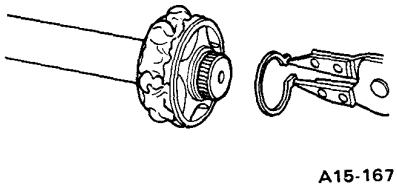

Fig. 9-102 Removing D.O.J. inner race from axle shaft ASSY

10) Remove boot from axle shaft ASSY.
11) Clean grease thoroughly from axle shaft splines.
12) Disassemble inner race, clean the balls, cage and inner race itself.
13) Clean grease thoroughly from inside D.O.J. outer race.

NOTE:
Clean the axle shaft splines, inner race and outer race with a brush and cleaning solvent.

Downloaded from www.Manualslib.com manuals search engine

2. Reassembly

NOTE:
Use specified grease.

Specified grease for constant velocity joint
Molylex No. 2 (P/N 623029980)

1) Put a new small boot band on axle shaft.
2) Fit a new boot in position on axle shaft.
3) Install inner race with cage oriented correctly on the axle shaft splines and secure it by fitting snap ring into the groove of axle shaft with special pliers.
4) Apply 20 to 30 g (0.71 to 1.06 oz) of specified grease to the cage pockets.
5) Fit six balls into the cage pockets.
6) Apply another 20 to 30 g (0.71 to 1.06 oz) of specified grease thoroughly to the inner surface of D.O.J. outer race.
7) Install outer race over inner race, aligning the former's ball tracks and balls in cage, and fit circlip in the groove of outer race.

NOTE:
a. Confirm that the circlip ends are not positioned in any of the ball tracks of outer race.
b. Confirm that circlip is completely fitted into the groove by pulling axle shaft outward lightly.

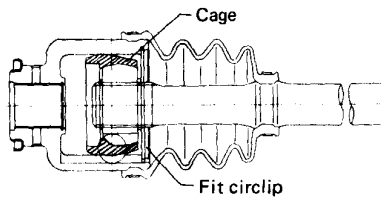

Fig. 9-103 Assembling D.O.J. components

8) Apply 20 to 30 g (0.71 to 1.06 oz) of specified grease to the D.O.J.'s interior.
9) Apply 20 to 30 g (0.71 to 1.06 oz) of specified grease to the boot interior and fit the large end of boot onto outer race.
Clean the band grooves on boot if they are stained with grease or other substance.
10) Secure the boot ends in position with new small and large bands in accordance with the tightening procedure of "9-12 Front Axle Shaft – 4. Assembly".

NOTE:
When tightening boot, exercise care so that an appropriate amount of air remains in boot.

11) Install D.O.J. onto axle drive shaft aligning their spring pin holes and drive in a new spring pin.
12) Connect transverse link with crossmember.
13) Mount front exhaust pipe using new gaskets and connect oxygen (O_2) sensor cord.
14) Lower vehicle on ground.

9-14. Rear Axle (Except 4WD)

1. Removal and Disassembly

1) Apply parking brake, and loosen rear wheel nuts.
2) Jack up vehicle, support it with safety stands (rigid racks) and remove rear tires and wheels.
3) Pry brake drum cap by screwdriver off drum.
4) Flatten lock washer and loosen axle nut, then remove lock washer, lock plate and brake drum so as not to drop inner race of outer tapere roller bearing.
Outer bearing, outer race of inner bearing and oil seal can be removed together with drum.
5) Remove spacer and inner race of inner bearing with a gear puller, after prying them by screwdriver.

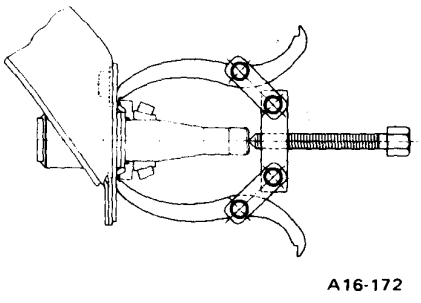

Fig. 9-104 Removing spacer and inner race of inner bearing

6) Remove outer race of inner bearing from drum. Remove oil seal at this time.

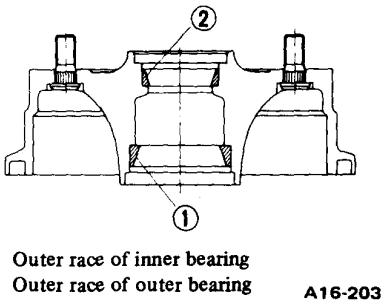

Fig. 9-105 Removing outer race of inner bearing

Downloaded from www.Manualslib.com manuals search engine

7) Remove outer race of outer bearing from drum.

2. Inspection

Clean the removed parts and check them for wear, damage and corrosion. If faulty, repair or replace.

3. Assembly and Installation

1) Press outer race of inner bearing into drum using tapered roller bearing installer (925220000) and a press.

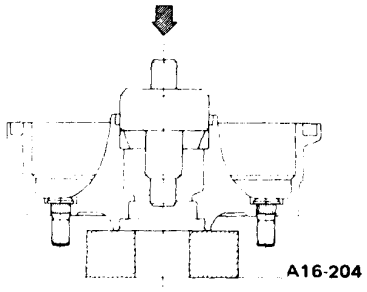

Fig. 9-106 Installing outer race of inner bearing

NOTE:
Never exceed the load to the bearing as it may damage it.

2) Install oil seal into drum until its outer end is flush with the drum surface.

NOTE:
Apply a little amount of grease to the lips of oil seal.

3) Press outer race of outer bearing into drum using tapered roller bearing installer (921130000) and a press.

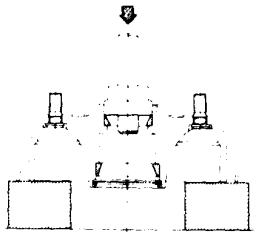

Fig. 9-107 Installing outer race of outer bearing

4) Apply approximately 4 g (0.14 oz) of grease to inner bearing and 3 g (0.11 oz) to outer bearing.
Fill the hub of drum with approximately 30 g (1.06 oz) of grease.
5) Install spacer O-ring, spacer and inner race of inner bearing onto the spindle of trailing arm.

NOTE:
Be sure to use new spacer O-ring without fail.
Stepped surface of the spacer must be faced toward the bearing.

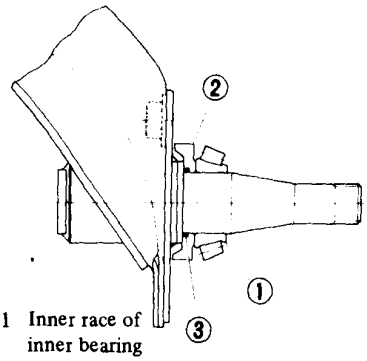

1 Inner race of inner bearing
2 Spacer
3 O-ring

A16-206

Fig. 9-108 Installing spacer and inner race of inner bearing

6) Install drum, inner race of outer bearing, lock plate, lock washer and axle nut in this order onto the spindle.

NOTE:
Be sure to use new lock plate and new lock washer without fail.

4. Adjusting Rear Wheel Bearing

1) Tighten axle nut with tightening torque of 49 N·m (5 kg-m, 36 ft-lb), and turn back nut a little, and then turn drum back and forth alternately several times to properly seat bearing and ascertain bearing stability.

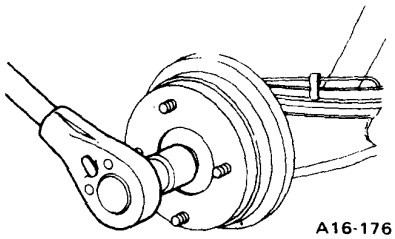

Fig. 9-109 Adjusting preload of bearing

2) Turn back nut 1/8 to 1/10 in order to obtain correct starting torque. Measure the starting force as shown.

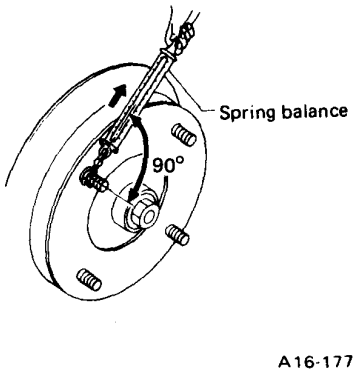

Fig. 9-110 Measuring starting force

Recommended starting force when measured at hub bolt
8.34 – 14.22 N (0.85 – 1.45 kg, 1.87 – 3.20 lb)

3) Bend lock washer.

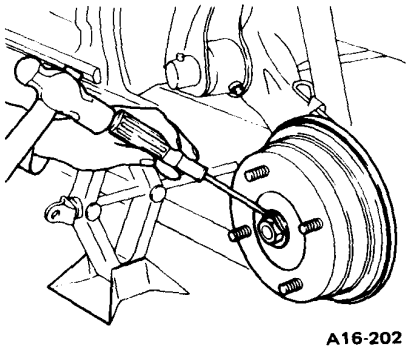

Fig. 9-111

4) After installing O-ring to drum cap, install cap to brake drum by lightly tapping with plastic hammer.

NOTE:
a. Do not use steel hammer etc.
b. Be sure to use new O-ring.

Downloaded from www.Manualslib.com manuals search engine

9-15. Rear Axle of 4WD

1. Removal

1) Apply parking brake.
2) Remove rear wheel cap and cotter pin, and loosen castle nut and wheel nuts.
3) Detach shock absorber from inner trailing arm.
4) Loosen locking bolts of cross-member outer bushing.
5) Jack up vehicle, support it with safety stand (rigid racks) and remove rear tires and wheels.
6) Remove castle nut and brake drum.
7) Drive out spring pins of inner and outer D.O.J.s by using a steel rod of 6 mm diameter.
8) Remove outer D.O.J. from spindle of trailing arm with trailing arm lowered fully, then remove inner D.O.J. from differential spindle.
9) Remove rear exhaust pipe, muffler and exhaust cover in that order.
10) Disconnect brake pipe from brake hose.

NOTE:
Fit air breather cap onto end of brake hose to prevent brake fluid from pouring out.

11) Remove brake assembly from trailing arm.
12) Remove bolt holding inner bushing of inner trailing arm.
13) Remove three bolts, and take out inner arm.
14) Vise inner arm, and straighten staked portion of housing, then remove ring nut by using special tool (Wrench 925550000).
15) Extract spindle inwardly by tapping it from out side with a plastic hammer.
16) Remove oil seal.

NOTE:
Be sure to replace the oil seal at every overhaul.

17) Insert spindle from out side of housing, and extract outer race of inner bearing, spacer and outer bearing by pushing inner race of outer bearing through the spindle by a press.
18) Remove inner race of inner bearing from spindle by using a press.

NOTE:
Don't remove bearing outer races when replacement of bearing is not necessary, because removal of bearing might damage the bearing.

2. Inspection

Inspect wear and damage of the removed spindle, brake drum and bearing.

NOTE:
If a bearing is faulty, replace it as the bearing set.

3. Installation

1) Install inner race of inner bearing on to the spindle, and install outer races of inner bearing and outer bearing and spacer by using press.

NOTE:
Don't confuse orientation of bearing outer races.

2) Apply grease of 20 to 30 g (0.71 to 1.06 oz) to bearing outer race in housing.
3) Insert spindle from inside, and press inner race of outer bearing from outside by using a pipe of 35 mm (1.38 in) in inner diameter while tapping it with a hammer.

NOTE:
Apply grease sufficiently on the inner and outer bearing area.

4) Install ring nut to housing.

Torque	172 – 221 N·m (17.5 – 22.5 kg-m, 127 – 163 ft-lb)

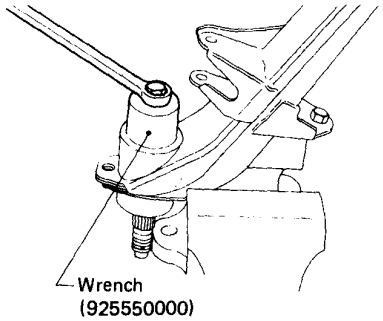

A15-169

Fig. 9-112 Tightening ring nut

5) Lock the ring nut by staking a point on the housing surface facing the ring nut groove.

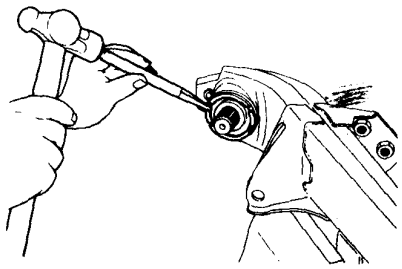

A16-188

Fig. 9-113 Staking housing

6) Install outer oil seal by using special tool (Installer 925530000).

NOTE:
Be sure to renew the oil seal.

7) Install inner oil seal by using special tool (Installer 925530000).

NOTE:
Be sure to renew the oil seal.

8) Mount inner arm to vehicle body.

Torque	
Inner bush bolt	74 – 93 N·m (7.5 – 9.5 kg-m, 54 – 69 ft-lb)
Inner and outer arms connecting bolts	118 – 147 N·m (12.0 – 15.0 kg-m, 87 – 108 ft-lb)

Downloaded from www.Manualslib.com manuals search engine

9) Install rear brake assembly to inner arm, and connect brake pipes etc.

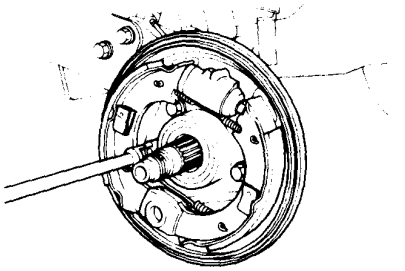

Fig. 9-114

Torque (Back plate)	46 – 58 N·m (4.7 – 5.9 kg-m, 34 – 43 ft-lb)

10) Connect brake hose and brake pipe.

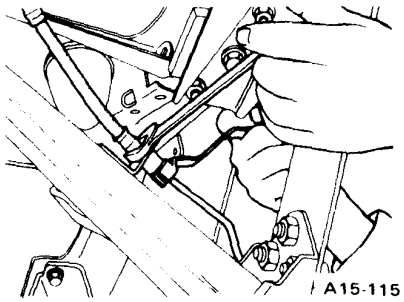

Fig. 9-115

11) Temporarily fit brake drum, center piece, washer spring and castle nut to spindle in this order.

NOTE:

a. Play on spindle experienced, when mounting brake drum is not a fault.

b. Don't confuse orientation of washer spring.

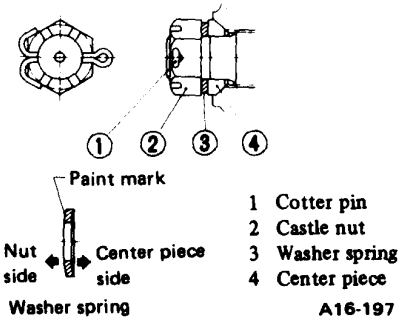

Fig. 9-116 Installing castle nut

12) Bleed brake system.

NOTE:

a. Before bleeding brake system, check pedal play and brake fluid level in reserve tank.

b. Bleed air from four wheels without fail.

13) Tighten castle nut, insert cotter pin and bend it firmly with foot brake applied to lock the wheel and axle.

Torque	196 N·m (20 kg-m, 145 ft-lb)

NOTE:

After tightening castle nut to the specified torque, tighten further within 30° to align holes on nut and spindle.

14) Install packing to differential spindle.

15) Engage D.O.J. of rear drive shaft to differential spindle.

NOTE:

a. When mounting, mate the spline teeth properly so that the D.O.J. and spindle spring pin hole will align.

b. When mounting the rear drive shaft assembly, take care not to mount the inner D.O.J. and outer D.O.J. oppositely.

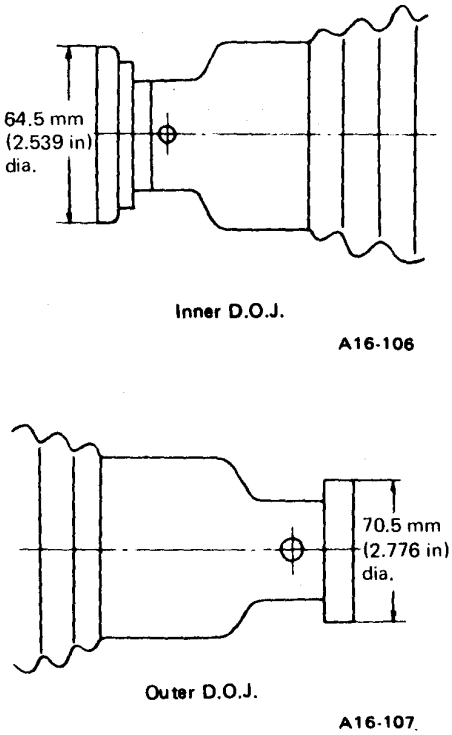

Fig. 9-117 Inner and outer D.O.J.

16) Install packing to rear spindle, and mount D.O.J. on rear drive shaft onto spindle with trailing arm lowered all the way.

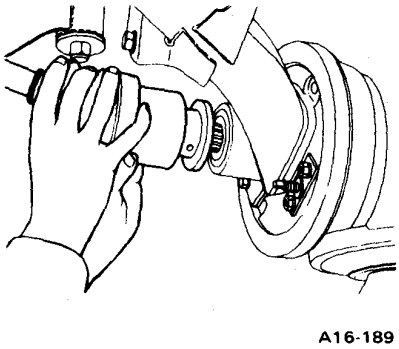

Fig. 9-118 Installing D.O.J. and spindle

17) Drive spring pins in to inner and outer D.O.J.s respectively.

NOTE:

a. Before driving in the spring pin, confirm alignment of the holes.

b. Be sure to renew the spring pin to be driven in.

Downloaded from www.Manualslib.com manuals search engine

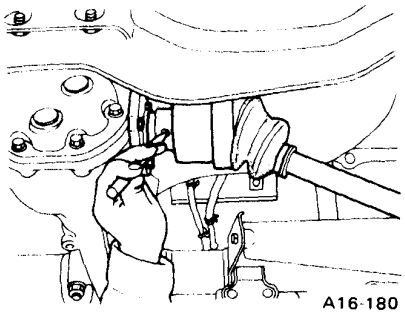

Fig. 9-119

NOTE:

a. Disassembly and reassembly procedure of rear drive shaft is the same as that of front drive shaft.

b. When reassembling the rear drive shaft assembly, take care not to mount the inner D.O.J. and outer D.O.J. oppositely.

18) Install wheels, outer arms, etc.

19) Lower vehicle on the ground, and install lower end of shock absorber.

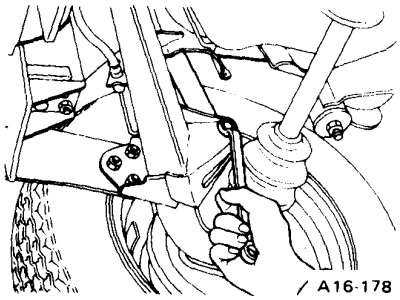

Fig. 9-120

Torque	88 118 N·m (9 12 kg-m, 65 87 ft-lb)

20) Check and adjust rear vehicle hight and rear wheel alignment.

21) Tighten outer bushing lock bolts.

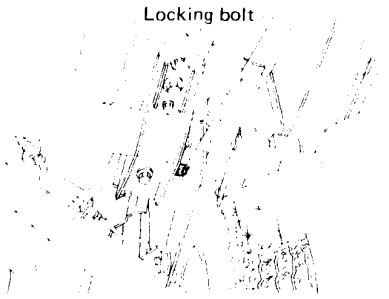

Fig. 9-121

4. Checking Rear Axle

Each part of axle must be checked carefully before and during overhaul to locate any possible cause of trouble.

1) Jack up body and turn wheel by hand to check its rotation. (At the same time make sure drum does not touch shoe.) If there is abnormal noise or if the rotation is not smooth, disassemble and examine axle carefully. A damaged bearing, mud in the bearing case, and so on are possible causes of such trouble.

2) Move wheel in and out and right and left to check its play. If excessive play is evident, measure the play in the following procedure.

After taking off wheel, attach dial gauge stand to trailing arm and measure the play at axle. To do this, bring the gauge indicator point to rest against the flat surface at the spindle outer end. While pushing and pulling the companion flange at the back, check dial gauge readings.

Free play back at axle (in axial direction)	
Standard	0.06 mm (0.0024 in)
Limit	0.10 mm (0.0039 in)

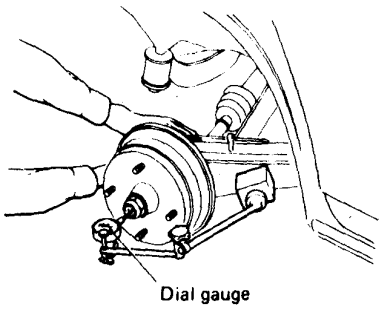

Fig. 9-122 Measuring play at axle (in axial direction)

Also check the play at the drum periphery by holding the top and bottom of drum and moving in and out alternately at the top and bottom.

Free play at periphery of drum.	
Standard	0.09 mm (0.0035 in)
Limit	0.15 mm (0.0059 in)

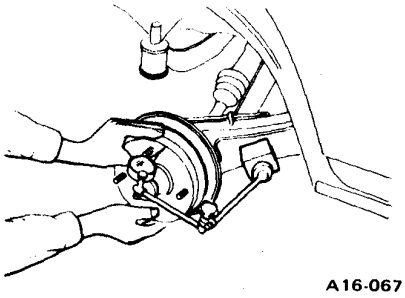

Fig. 9-123 Measuring play at periphery of drum

If the reading exceeds the standard limit, check the torque of axle nut, wear of spindle, bearings, and oil seals, and make necessary adjustment or replacement.

Downloaded from www.Manualslib.com manuals search engine

9-16. Wheel

1. Removal

On a level and solid place, first apply the parking brake and place a tire stopper under the front or rear of one wheel.

1) Loosen wheel nuts with a wheel nut wrench.

NOTE:

a. Always apply the parking brake before jacking up the vehicle.

b. To prevent possible accident, remove the wheel nuts after jacking up the vehicle.

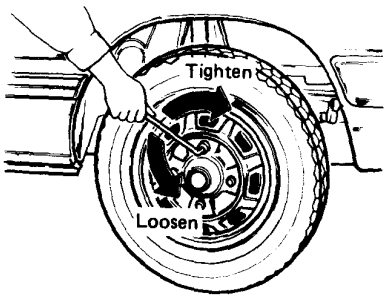

A16-207

Fig. 9-124 Loosening wheel nuts

2) Set jack at the correct jack-up point, and turn the jack handle slowly to jack car up, and then proceed to remove wheel and tire by removing wheel nuts completely.

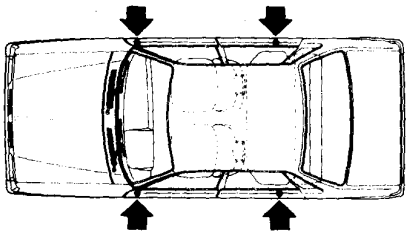

OM-656

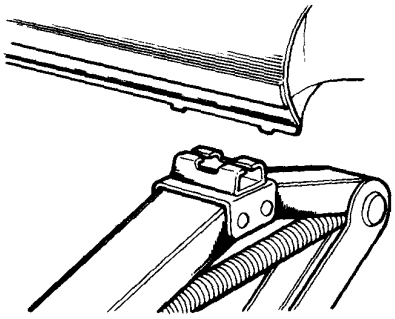

OM-581

Fig. 9-125 Jack-up points

NOTE:

a. When jacking the car up, make sure the jack is set at the correct position on the flange of side sill.

b. When jacking the car up by using a garage jack, refer to the section "1-9. Lifting Points and Procedure".

2. Inspection

Check removed wheels for followings.

1) Damage and/or warp of rim.

Since damaged or warped rim may cause air leakage from tire, replace or repair if defective.

2) Take stone, glass, nail etc. off the tread groove.

3) Large crack on side wall, damage or crack on tread and tread wear.

The tire should be replaced, when the "tread wear indicator" appears as a solid band across the tread.

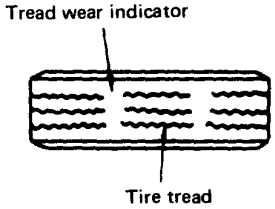

A16-045

Fig. 9-126 Tread wear indicator

NOTE:

When replacing a tire, make sure to use only the same size, type and load range as originally installed. Avoid mixing radial, belted bias or bias tires on the vehicle.

3. Disassembly

Tubeless tires are prepared for all SUBARU vehicles, so pay attention to the following.

1) Avoid using a hammer to prevent damaging disc wheel and tire. If the use of such a tool is unavoidable, use a rubber hammer.

2) Damaged or warped rim may cause air leakage from tire, so check rims periodically.

Pay special attention to removing and reinstalling tires.

3) As scratched bead of tire may also cause the air leak from tire, tire should be removed or installed carefully not to mar the bead of tire.

4. Assembly

Pay attention to the following.

1) Be sure not to damage wheel rim and tire.

2) If the bead section of tire is damaged, replace it with a specified new one.

3) If the flange portion of wheel rim is deformed or damaged, replace it with a specified new one.

4) Install a snap-in valve into the valve hole of wheel rim properly not to leak air.

5. Wheel Balancing

Unbalanced wheel (including disc wheel and tire) can result from improper wheel alignment, lateral slippage, uneven wheel wear due to insufficient air pressure, and wheel repair work. After tire exchange or wheel repair work has been performed, be sure to check static and dynamic balancing of wheels. Unbalanced wheel does not greatly influence vehicle operation at low and medium speeds.

At 60 km/h (37 MPH) and over, however, the steering system can be influenced, that is, as illustrated below, force proportional to the increase in the wheel revolution is applied in the direction indicated by the arrow.

This force causes "steering wheel shimmy" or what can otherwise be termed steering wheel instability.

Downloaded from www.Manualslib.com manuals search engine

There are various ways to correct wheel unbalance. To correct precisely wheel unbalance, use wheel balancer. Wheel should be statically and dynamically balanced.

W,W' : Amount of unbalance
F,F' : Centrifugal force resulting from unbalance

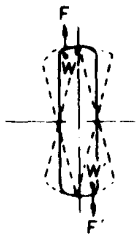

A16-042

Fig. 9-127 Wheel unbalance

When operating a wheel balancer, be careful of the handling.

1) Correctly install hub nut. The balancer shaft must be aligned with the center of wheel to be corrected.
2) Firmly seat wheel on arbor.
3) Handle the disc wheel fitting section of balance weight carefully because it is easily damaged.
4) After installing balance weight, position it in the groove of disc wheel.
5) Use genuine balance weights.

Parts No. for steel rim	Weight
723141010	10 g (0.35 oz)
723141020	20 g (0.71 oz)
723141030	30 g (1.06 oz)
723141040	40 g (1.41 oz)
723141050	50 g (1.76 oz)
723141070	5 g (0.18 oz)
723141080	15 g (0.53 oz)
723141090	25 g (0.88 oz)
723141100	35 g (1.23 oz)
723141110	45 g (1.59 oz)

Allowable dynamic unbalance
12 g (0.42 oz) at rim flange

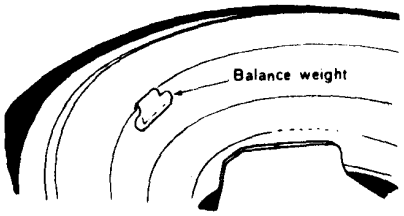

A16-043

Fig. 9-128 Installing balance weight

6. Installation

1) Fit wheel over drum bolts, and thread on four wheel nuts with a wheel nut wrench.

NOTE:

a. Do not use air impact tool to tighten the wheel nuts.

b. Tighten the wheel nuts in the order as shown.

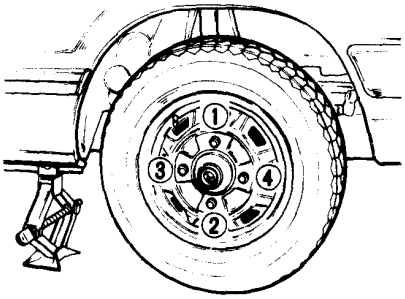

OM-534

Fig. 9-129

c. When tightening wheel nuts, do not apply oil to wheel nuts thread section of bolts nor tapered seats of wheels.

2) Lower vehicle slowly by turning the jack handle.
3) Sufficiently tighten wheel nuts in the above-mentioned sequence.

Torque	78 – 98 N·m (8.0 – 10.0 kg-m, 58 – 72 ft-lb)

NOTE:

When replacing or reinstalling wheel, retighten wheel nuts to the specified torque after first 1,000 km (600 miles) running.

7. Adjusting Air Pressure

As shown in table on page 9-4, air pressure must be adjusted to the prescribed value when tires are cool, or before starting vehicle, as air pressure increases as tire temperature rises during vehicle operation. This rise amounts to an increase of up to 20% at times, and at such a high pressure the ride is uncomfortable, abnormal wear is promoted, various forms of damage may result, steering instability is likely, along with insufficient braking, etc.

On the other hand, excessively low air pressure in tires may result in abnormal wear, various forms of damage, loss of drive power, increased fuel consumption, etc.

Tire air pressure must be adjusted in accordance with these conditions.

8. Tire Rotation

If tires are maintained at the same positions for a long period of time, uneven wear results. Therefore, they should be periodically rotated.

This lengthens service life of tires.

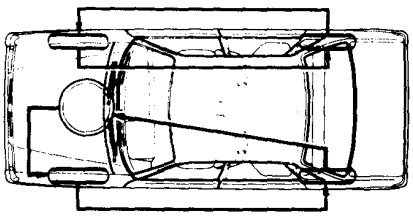

A16-210

Fig. 9-130 Order of tire rotation

Downloaded from www.Manualslib.com manuals search engine

NOTE:

a. When rotating tires, replace uneven worn and damaged tires by new ones.

b. In case "T-type" tire for temporary use is prepared as a spare tire, tire rotation is as follows.

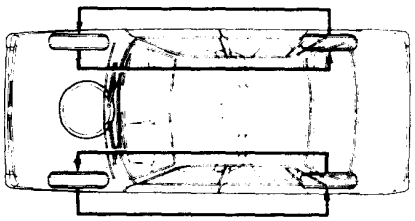

A16-211

Fig. 9-131

9. "T-type" Tire

"T-type" tire for temporary use is prepared for 4WD vehicles as a spare tire.

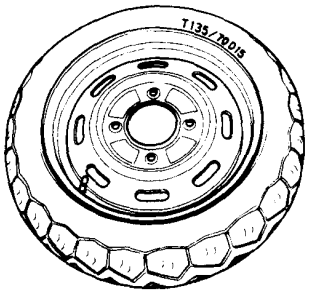

A16-209

Fig. 9-132 T-type tire

1) Precaution when driving with "T-type" tire fitted;

a. Do not drive it in a speed more than 80 km/h (50 MPH) on highway.

b. Drive it as slowly as possible to prevent running over bump and/or hump on off-road.

c. Do not drive it with 4WD engaged.

d. Since this "T-type" tire is only for temporary use, replace it with the standard tire as soon as possible.

2) Notes for maintenance of "T-type" tire;

a. Ensure to keep the inflation pressure always at 412 kPa (4.2 kg/cm^2, 60 psi).

b. When wear indicator appears on the tread surface, replace tire with new one without fail.

Downloaded from www.Manualslib.com manuals search engine

●TROUBLESHOOTING

1. Suspension

1) Wrong Vehicle Posture

Possible causes	Countermeasures
(1) Permanent distorsion or breakage of torsion bar	Replace
(2) Unsmooth operation of shock absorber	Replace
(3) Wrong installation of inner arm	Re-install
(4) Deformation of inner arm	Replace

2) Bad Comfortability

1) Large rebound shock
2) Rocking of vehicle continues too long after running over bump and/or hump.
3) Large shock in bumping

Possible causes	Countermeasures
(1) Breakage of torsion bar	Replace
(2) Large deformation or loss of helper	Replace
(3) Over inflation pressure of tire	Adjust
(4) Wrong vehicle posture	Adjust
(5) Fault in operation of shock absorber	Replace
(6) Damage or deformation of shock absorber lower end bushing	Replace
(7) Unsuitability of maximum and/or minimum length of shock absorber	Replace with proper parts
(8) Deformation or loss of bushing	Replace

3) Noise

Possible causes	Countermeasures
(1) Wear or damage of shock absorber component parts	Replace
(2) Damage or deformation of shock absorber lower end bushing	Replace
(3) Loosening of outer bushing lock bolt	Retighten to the specified torque. When noise does not stop after retightening lock bolt ① to the specified torque, add lock bolt ② and tighten it to the specified torque.
(4) Deformation or loss of bushings	Replace
(5) Loosening of inner arm bracket	Retighten to the specified torque.
(6) Unsuitability of maximum and/or minimum length of shock absorber	Replace with proper parts
(7) Loss of helper	Install new one
(8) Breakage of torsion bar	Replace
(9) Loosening of each bolts and/or nuts	Retighten to the specified torque

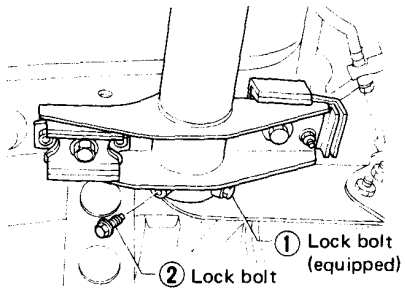

Fig. 9-133 A15-170

Torque	31 – 39 N·m (3.2 – 4.0 kg-m, 23 – 29 ft-lb)

Downloaded from www.Manualslib.com manuals search engine

●SPECIAL TOOLS

1. Suspension

921390000	925380000	925390000	925651000
Bush Installer	Installer	Wrench	Puller & Wrench
Inner bush of inner arm	Damper strut oil seal	Damper strut oil seal	Damper strut
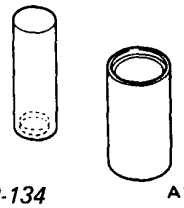 *Fig. 9-134* A15-135	*Fig. 9-135* A15-134	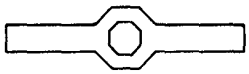 *Fig. 9-136* A15-133	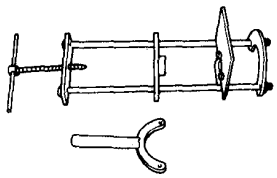 *Fig. 9-137* ST-174

2. Wheels and Axles

921122000	921130000	925091000 *	925130000
Puller	Installer	Band Tightening Tool	Installer
Housing	Brake Drum Bearing (Outer)	D.O.J. Boot C.V.J. Boot	Housing
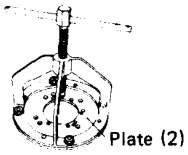 *Fig. 9-138* ST-172	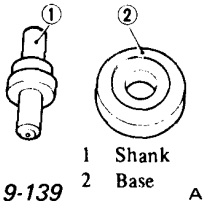 *Fig. 9-139* A16-052	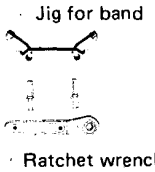 *Fig. 9-140* A15-171	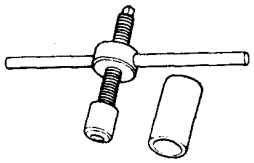 *Fig. 9-141* A16-047
925140000	925220000	925530000	925550000
Installer	Installer	Installer	Wrench
Housing Bearing	Brake Drum Bearing (Inner)	Oil Seal (4WD)	Rear Axle Ring Nut (4WD)
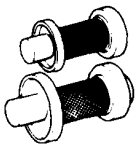 *Fig. 9-142* A16-046	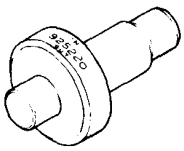 *Fig. 9-143* A16-151	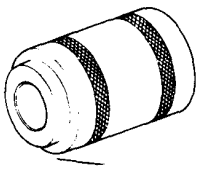 *Fig. 9-144* A16-154	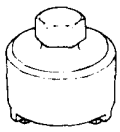 *Fig. 9-145* A16-053

* Former Band Tightening Tool (925090000) is interchangeable with this 925091000.

Downloaded from www.Manualslib.com manuals search engine

CHAPTER 10

BRAKES

		Page
10– 1.	SPECIFICATIONS AND SERVICE DATA	10– 2
10– 2.	FRONT BRAKE	10– 4
10– 3.	REAR BRAKE	10–12
10– 4.	MASTER CYLINDER	10–15
10– 5.	BRAKE BOOSTER (Master-Vac)	10–17
10– 6.	PARKING (Hand) BRAKE	10–20
10– 7.	REPLACEMENT OF BRAKE FLUID	10–22
10– 8.	BRAKE LINE	10–24
10– 9.	TROUBLESHOOTING	10–27
10–10.	HILL-HOLDER	
	1. Construction and Operation	10–29
	2. Component Parts	10–31
	3. Removal	10–32
	4. Inspection	10–32
	5. Installation	10–32
	6. Adjustments	10–33
	7. Troubleshooting	10–33
10–11.	SPECIAL TOOLS	10–35

SUBARU

Downloaded from www.Manualslib.com manuals search engine

10-1. Specifications and Service Data

ITEM \ MODEL		Hatchback, Sedan and Hardtop	Station Wagon and BRAT
Front brake	Type	Disc (AD type)*	
	Effective disc diameter	184 mm (7.24 in)	
	Effective cylinder diameter	53.97 mm (2.1248 in)	
	Lining dimensions (Width x length x thickness)	Inner: 45 x 97 x 9 mm (1.77 x 3.82 x 0.35 in) Outer: 45 x 94 x 9 mm (1.77 x 3.70 x 0.35 in)	
	Lining surface area	Inner: 40 x 2 cm^2 (6.2 x 2 sq in) Outer: 38 x 2 cm^2 (5.9 x 2 sq in)	
	Clearance adjusting mechanism	Automatic adjustment	
Rear brake	Type	Drum (Leading-Trailing)	
	Effective drum diameter	180 mm (7.09 in)	
	Wheel cylinder effective diameter	15.87 mm (5/8 in)	17.46 mm (11/16 in)
	Lining dimensions (Width x length x thickness)	30 x 141 x 5 mm (1.18 x 5.55 x 0.20 in)	
	Lining surface area	42 x 2 x 2 cm^2 (6.5 x 2 x 2 sq in)	
	Clearance adjusting mechanism	Manual adjustment	
Master cylinder	Type	Tandem	
	Effective diameter	20.64 mm (13/16 in)	
	Maximum stroke	29.5 mm (1.161 in)	
	Brake fluid level indicator	Built-in	
Brake fluid reservoir capacity		180 cm^3 (180 cc, 10.98 cu in)	
Brake booster (Master-Vac)	Type	Vacuum suspended	
	Effective diameter	152.4 mm (6 in)	177.8 mm (7 in)
Brake line		Dual circuit system	
Parking brake type		Mechanical on front brake	

* Station Wagon 4WD AT & BRAT 4WD AT: Ventilated disc

Downloaded from www.Manualslib.com manuals search engine

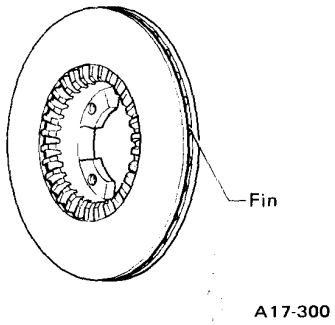

Fig. 10-1 Ventilated disc rotor

ITEM		STANDARD	SERVICE LIMIT
Front brake (Disc type)	Pad thickness (including back metal)	15 mm (0.59 in)	7.5 mm (0.295 in)
	Disc thickness Solid disc	12.5 mm (0.492 in)	10 mm (0.39 in)
	Ventilated disc	18 mm (0.71 in)	15.5 mm (0.610 in)
	Disc run-out	———	0.10 mm (0.0039 in)
Rear brake (Drum type)	Inside diameter	180 mm (7.09 in)	182 mm (7.17 in)
	Lining thickness	5 mm (0.20 in)	1.5 mm (0.059 in)
Brake booster (Master-Vac)	Brake fluid pressure without engine running	At brake pedal force 147 N (15 kg, 33 lb): 392 kPa (4 kg/cm², 57 psi) At brake pedal force 294 N (30 kg, 66 lb): 2,550 kPa (26 kg/cm², 370 psi)	
	Brake fluid pressure with engine running and vacuum at 66.7 kPa (500 mmHg, 19.69 inHg)	At brake pedal force 147 N (15 kg, 33 lb): 3,432 kPa (35 kg/cm², 498 psi) At brake pedal force 294 N (30 kg, 66 lb): 152.4 mm (6 in): 5,884 kPa (60 kg/cm², 853 psi) 177.8 mm (7 in): 6,865 kPa (70 kg/cm², 995 psi)	
Parking brake	Lever stroke	3 to 4 notches/245 N (25 kg, 55 lb)	
Hill-holder	Adjusting shim Thickness	0.6 mm (0.024 in) (One shim increases an angle of approx. 0.5°.)	
	Part Number	725807000	

- **Recommended Brake Fluid**

FMVSS No. 116, DOT3

NOTE:

a. Avoid mixing brake fluid of different brands to prevent the fluid performance from degrading.
b. When brake fluid is supplemented, be careful not to allow any dust into the reservoir.
c. Use fresh DOT3 brake fluid when replacing or refilling the fluid.

Downloaded from www.Manualslib.com manuals search engine

10-2. Front Brake

1. Component Parts

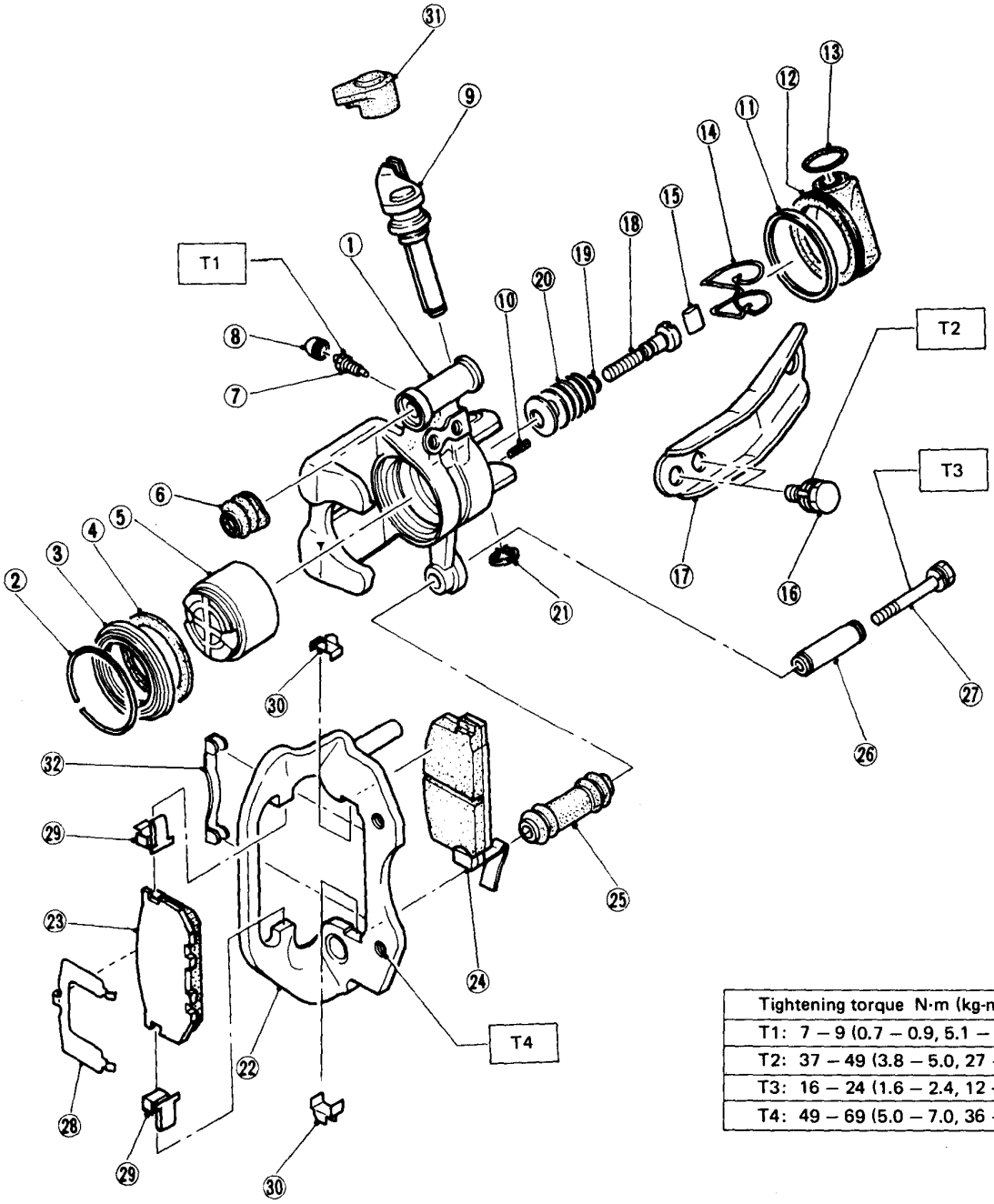

Tightening torque N·m (kg-m, ft-lb)
T1: 7 – 9 (0.7 – 0.9, 5.1 – 6.5)
T2: 37 – 49 (3.8 – 5.0, 27 – 36)
T3: 16 – 24 (1.6 – 2.4, 12 – 17)
T4: 49 – 69 (5.0 – 7.0, 36 – 51)

1 Caliper body
2 Boot ring
3 Piston boot
4 Piston seal
5 Piston
6 Guide pin boot
7 Air bleeder screw
8 Air bleeder cap
9 Lever & spindle
10 Spring pin
11 Cap ring
12 Lever cap
13 Garter spring
14 Return spring
15 Connecting link
16 Bolt ASSY
17 Bracket
18 Spindle
19 O-ring
20 Cone spring
21 Snap ring
22 Support
23 Outer pad
24 Inner pad
25 Lock pin boot
26 Sleeve
27 Lock pin
28 Shim
29 Outer pad clip
30 Inner pad clip
31 Lever cap (upper)
32 Inner pad clip

Fig. 10-2 Component parts

A17-301

Downloaded from www.Manualslib.com manuals search engine

• Grease Application

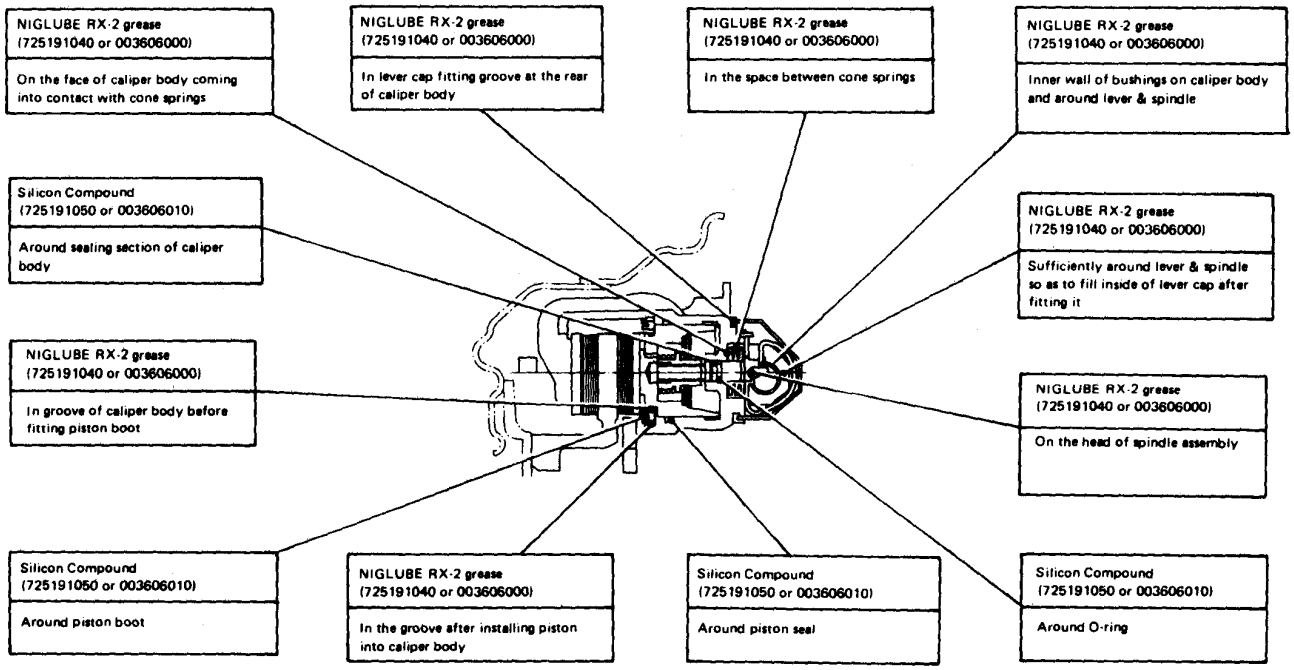

Fig. 10-3

A17-227

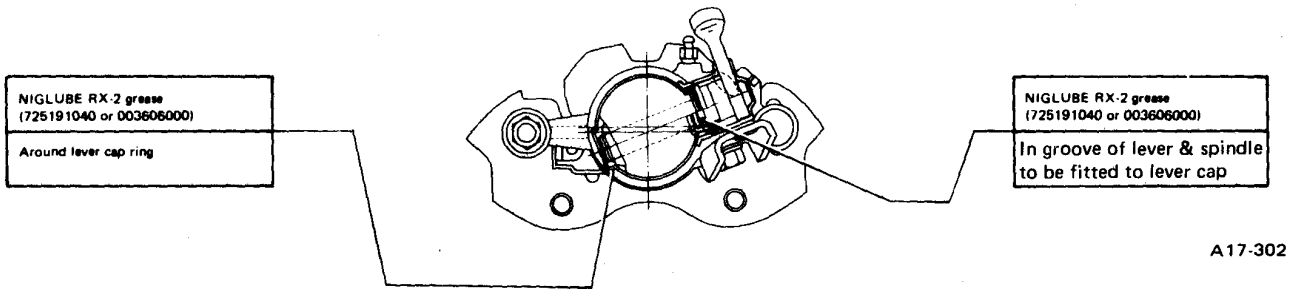

A17-302

Fig. 10-4

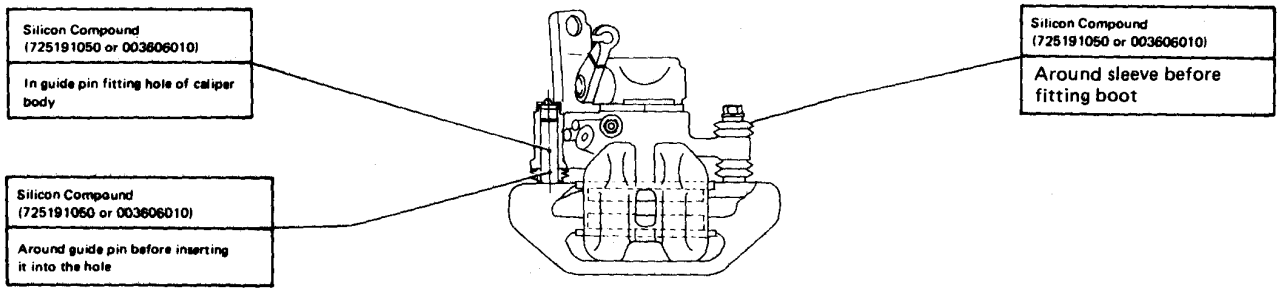

Fig. 10-5

A 17-303

NOTE:
Be sure to apply Silicon Compound (725191050 or 003606010) to guide pin and lock pin without fail. Do not use the other grease.

Downloaded from www.Manualslib.com manuals search engine

2. Pads Replacement

1) Removal

1) Apply wheel chocks on rear wheels and jack up the vehicle front, then remove front wheels.
2) Return hand brake lever completely.
3) Remove inner cable end from lever, draw out outer cable clamp, then disconnect hand brake cable from caliper body ASSY.

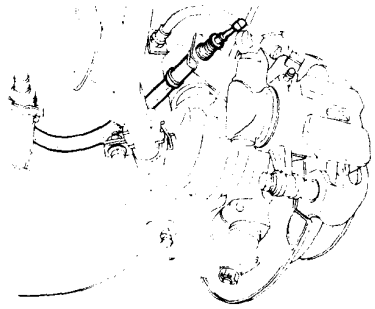

A17-304

Fig. 10-6 Removing hand brake cable

4) Remove lock pin.

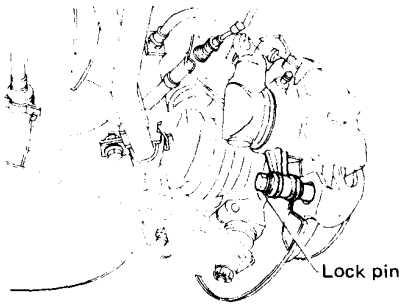

A17-305

Fig. 10-7 Removing lock pin

5) Spin caliper body ASSY on guide pin.

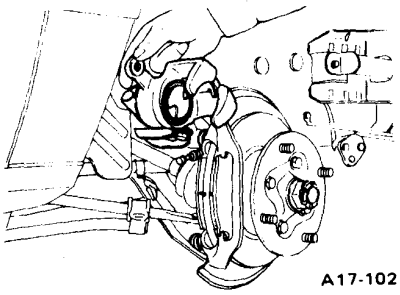

A17-102

Fig. 10-8 Spinning caliper body ASSY

6) Remove pads from support.

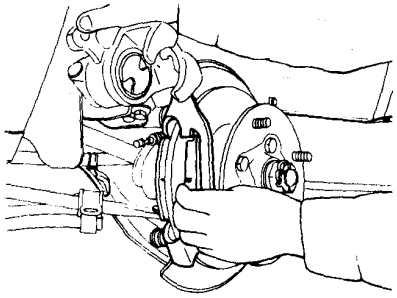

A17-103

Fig. 10-9 Removing pad

NOTE:
a. Do not touch the brake pedal after the pads have been removed.
b. Do not disconnect hose.

2) Inspection

1) Pad
Replace if it is wet with oil or worn.

Pad thickness including back metal mm (in)	
Standard	15.0 (0.591)
Usable limit	7.5 (0.295)

NOTE:
a. Always replace the pads for both the left and right wheels at the same time. Also replace pad clips if they are twisted or worn.
b. The clip incorporated with inner pad is also used as a warning device for worn pads. When wear occurs on the pad to such an extent that the clip comes into contact with the rotor, unusual noise is produced when brakes are not applied. If such a noise is noticed, replace the pad.

2) Disc rotor
Check for wear and damage, and correct or replace if abnormal.

Disc rotor thickness mm (in)		
Solid disc	Standard	12.5 (0.492)
	Usable limit	10.0 (0.394)
Ventilated disc	Standard	18 (0.709)
	Usable limit	15.5 (0.610)

3) Installation

1) It is necessary to push back piston into cylinder, since piston protrudes from cylinder in proportion to the amount of pad wear, and the gap where pads are to be inserted is narrow.
Rotate piston clockwise with Wrench (925590000) to force in piston to caliper body, and set the piston notch to the specified position.

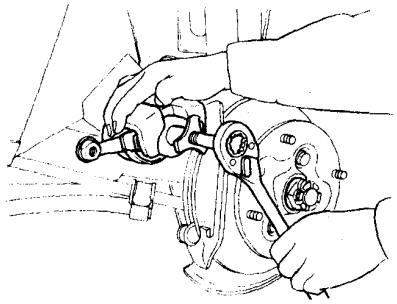

A17-291

Fig. 10-10 Pushing back piston

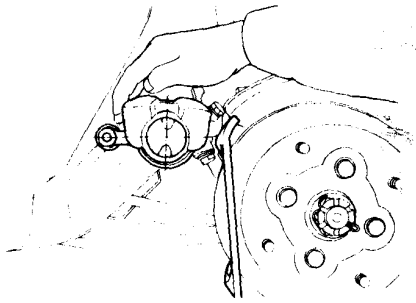

A17-292

Fig. 10-11 Specified position of piston notch

After pushing back piston, check piston boot for twist. If twisted, correct twist using a strip driver.

NOTE:
a. Do not disconnect hose.
b. Always return the piston to that point which allows only a minimum clearance for the pad to be inserted.
c. Be sure to use the special tool when pushing in the piston to the caliper body. If the piston is pushed into the caliper body with a vice and without rotating it, the spindle (5-thread) may be buckled. To prevent this, the piston should be rotated clockwise when pushed into the caliper body.

Downloaded from www.Manualslib.com manuals search engine

2) Remove rust and foreign materials from the contact area of support with the sliding part of pad. Apply PBC grease (725191060 or 003603000) to this area. Then, install a new genuine SUBARU pad. Make sure that pad clips are in normal operating condition before installing new pad.

NOTE:

a. Securely attach all pads to the frictional surfaces of their supports.

b. Do not install shim on inner pad.

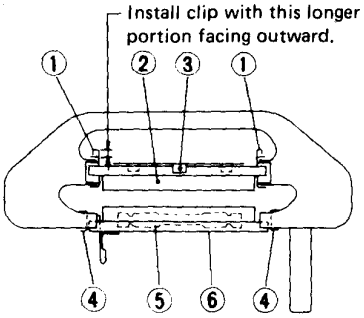

1 Outer pad clip
2 Outer pad
3 Shim
4 Inner pad clip
5 Inner pad clip
6 Inner pad

A17-306

Fig. 10-12 Right installation of pad

3) Remove foreign materials from lock pin.

Tighten lock pin to the specified torque.

NOTE:

Fit the boot securely to the sleeve groove.

Torque (Lock pin)	16 – 24 N·m (1.6 – 2.4 kg-m, 12 – 17 ft-lb)

4) Upon completion of installing the brake system, confirm that the pad dowel (rise on pad back metal) fits into the piston notch.

Depress brake pedal to an extent of applying the normal braking force several times. With the aforementioned procedure, a proper amount of clearance can be obtained, and the stroke of hand brake lever can also be adjusted to the normal value.

[The completion of the adjustment can be confirmed as follows. Hand brake lever moves 3 to 4 notches when it is pulled with a force of 245 N (25 kg, 55 lb).]

5) No further adjustment is needed, since the clearance is automatically adjusted every time the brake is applied.

6) Put back tires and rotate them several times. Then, wind a rope around the circumference of tire, and confirm that tire can be rotated with a force of less than 39 N (4 kg, 9 lb) at the outside diameter of tire.

a. If wheel bearing is worn or disc rotor is not exactly perpendicular to the counterpart, the surface of disc rotor runs out in the axial direction during rotation. This causes disc rotor to be pressed against lining, and rotational resistance increases.

When such trouble occurs, measure the disc rotor run-out. If the run-out exceeds the limit, change the tightening position of rotor on hub or the meshing position of hub to axle shaft serration. If this does not correct the run-out, replace rotor.

Disc rotor run-out	
Limit	0.10 mm (0.0039 in)

NOTE:

Measure the disc rotor run-out at a point less than 5 mm (0.20 in) from the outer periphery of the rotor.

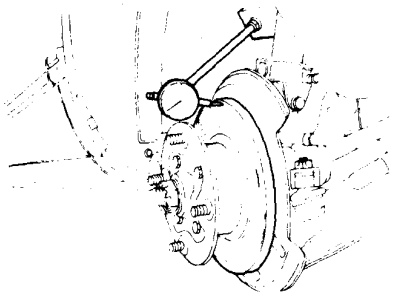

A17-109

Fig. 10-13 Measuring disc rotor run-out

b. If the rotational resistance is over the specified value due to the other causes, recheck disc brake ASSY and repair or replace it if necessary.

3. Disc Brake Assembly

1) Removal and Disassembly

1) Remove union bolt and disconnect brake hose from caliper body ASSY.

2) Remove hand brake cable and pad in accordance with the removing procedure of pad. (Refer to page 10-6)

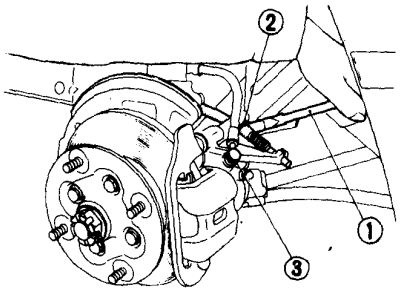

1 Pliers
2 Clamp
3 Union bolt

A17-234

Fig. 10-14 Disconnecting hand brake cable and brake hose

3) Remove caliper ASSY by pulling it out of support.

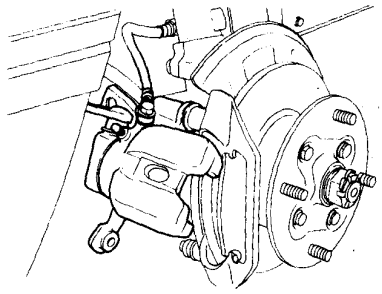

A17-295

Fig. 10-15 Removing caliper ASSY

4) Remove support from housing.

NOTE:

The support should be removed only when the disc rotor or the support is replaced, and should not be removed when performing the maintenance of the caliper ASSY.

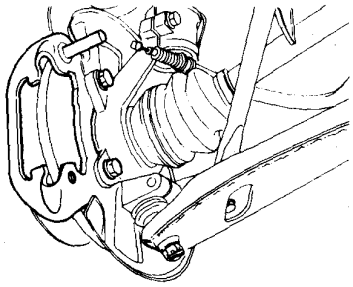

A17-307

Fig. 10-16 Removing support

Downloaded from www.Manualslib.com manuals search engine

5) After removing caliper body ASSY, remove sludge and dirt from the outer part of caliper body ASSY.

NOTE:
Take special care to prevent dirt from entering through the brake fluid inlet.

6) Remove sleeve, then remove lock pin boot.

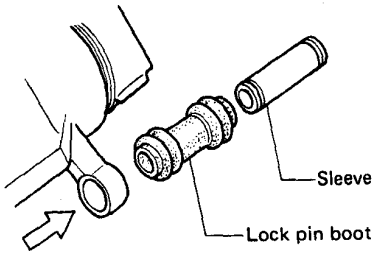

A17-308

Fig. 10-17 Removing sleeve and lock pin boot

7) Remove boot ring by using a strip driver with taking special care so as not to scratch piston boot. Then, remove piston boot.

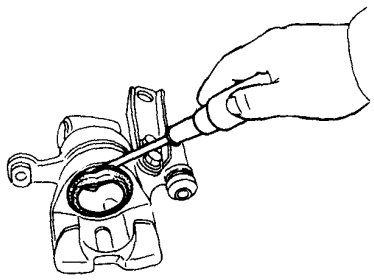

A17-116

Fig. 10-18 Removing boot ring and boot

NOTE:
If the strip driver is not available, use a screwdriver after the tip of the screwdriver is rounded off, and burrs are thoroughly eliminated.

8) Draw out piston from cylinder by applying a compressed air or pressurized liquid gradually from the brake fluid inlet of caliper ASSY.

NOTE:
Do not apply an excessively high pressure, since such carelessness may cause the piston to spring out of the cylinder.

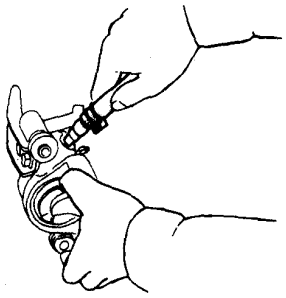

A17-117

Fig. 10-19 Removing piston

9) Removing guide pin boot.
Evenly tap the dowels (two places) of boot.

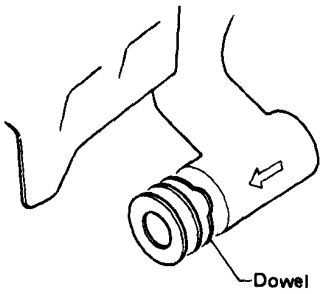

A17-118

Fig. 10-20 Removing guide pin boot

NOTE:
Replace the removed boot with a new one.

10) Remove piston seal by using a strip driver with taking special care so as not to scratch the inner wall of cylinder.

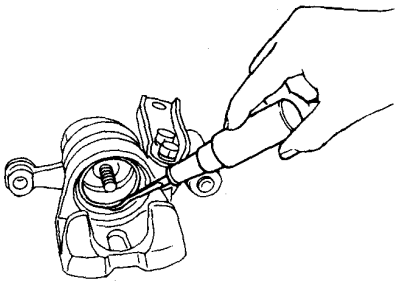

A17-296

Fig. 10-21 Removing piston seal

11) Remove cap ring and lever cap, then remove snap ring from lever & spindle.

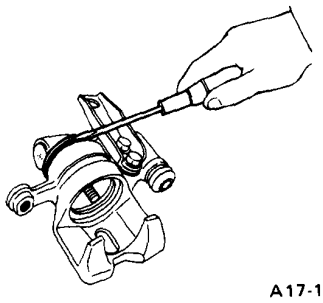

A17-120

Fig. 10-22 Removing cap ring and lever cap

NOTE:
The lever cap may only be pulled out of the groove in the caliper body.

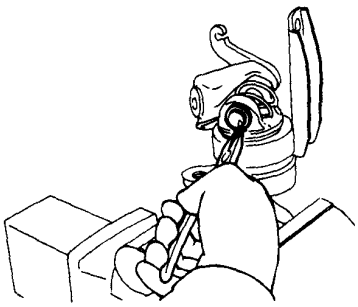

A17-121

Fig. 10-23 Removing snap ring

12) Press spring washer (coned disc spring) with Puller (925471000) to eliminate a load applied to lever & spindle through spring washer, pull out lever & spindle.
Detach Puller, and then remove connecting link and return spring.

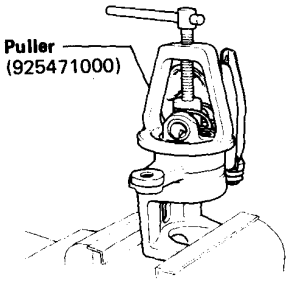

A17-309

Fig. 10-24 Removing lever & spindle

Downloaded from www.Manualslib.com manuals search engine

2) Inspection

Inspect the disassembled parts, correct or replace if defective.
1) Caliper body
Uneven wear, damage or rust.
2) Piston
Uneven wear, damage or rust.
3) Rubber parts
Deformation, wear, damage, deterioration or coat of mineral oil.
4) Pad clip
Deformation, wear, damage or rust.
5) Spindle and cone spring
Damage or rust.
6) Lever and spindle
Damage or rust.
7) Support
Wear, damage or rust.
8) Other parts
Deformation, wear, damage or rust.

NOTE:
If the rubber parts are scratched or coated with mineral oil, replace it with a new one.

3) Assembly and Installation

1) Clean the inner part of caliper body (cylinder) with brake fluid. Apply a thin coat of Silicon Compound (725191050 or 003606010) to piston seal, and fit the seal to the groove provided in the cylinder with hand.

NOTE:
Pay special attention to prevent the seal from twisting.

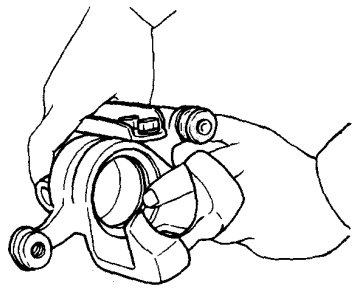

A17-298

Fig. 10-25 Inserting piston seal

2) Insert piston into cylinder.

NOTE:
Be sure to insert the piston into the cylinder with hand.
Do not use a vice when inserting the piston.

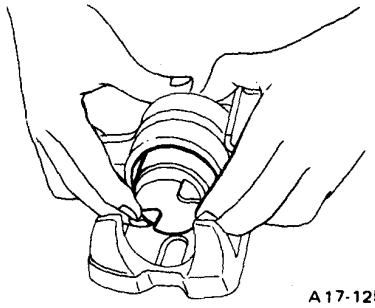

A17-125

Fig. 10-26 Inserting piston

3) Upon completion of inserting piston into cylinder, apply NIGLUBE RX-2 grease (725191040 or 003606000) into the grooves provided in cylinder and along the circumference of piston head. Then fit boot into the grooves. After confirming that boot is not twisted, attach boot ring.

NOTE:
When attaching the boot ring, refer to the figure.

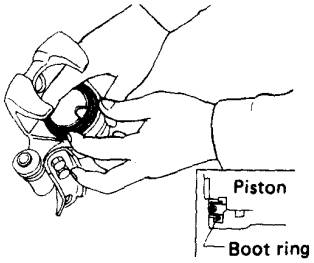

A17-126

Fig. 10-27 Fitting piston boot and boot ring

4) Apply NIGLUBE RX-2 grease (725191040 or 003606000) to the cone springs fitting section of spindle, into the space between cone springs after fitting them, and onto the face of caliper body coming into contact with cone springs.
Apply a thin coat of Silicon Compound (725191050 or 003606010) to the sealing section of caliper body coming into contact with O-ring of spindle ASSY.
Then, insert spindle ASSY into cylinder by turning clockwise from the opening at the bottom of caliper body.

NOTE:
Be sure to apply the specified grease or compound to the proper sections without fail.

NOTE:
Be sure to apply the specified grease or compound to the proper sections without fail.

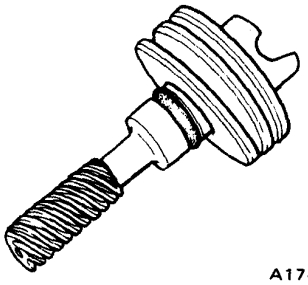

A17-027

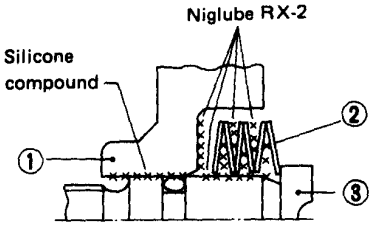

1 Caliper body
2 Cone spring
3 Spindle

A17-223

Fig. 10-28 Spindle ASSY and grease application

NOTE:
a. When the cone spring is replaced due to scratch, be sure to replace the O-ring with a new one. Also, attach a new cone spring before fitting the O-ring.
Six cone springs are incorporated. The assembling combination is as follows.

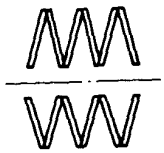

A17-029

Fig. 10-29

b. After attaching cone springs, apply thin coat of Silicon Compound (725191050 or 003606010) to the O-ring, and insert it with Adapter (925600000) with taking care to prevent the O-ring from being damaged.

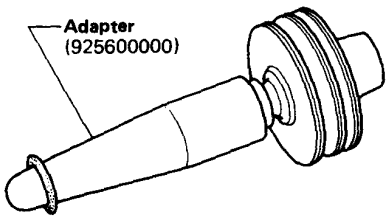

Fig. 10-30 Fitting O-ring

A17-310

Downloaded from www.Manualslib.com manuals search engine

5) Apply NIGLUBE RX-2 grease (725191040 or 003606000) to the head of spindle ASSY and onto the inner wall of bushings on caliper body in which lever & spindle is to be fitted. After setting connecting link and return spring, press a set of cone springs by Puller (925471000).
Apply NIGLUBE RX-2 grease (725191040 or 003606000) to grooves of lever & spindle in which lever cap and connecting link are to be fitted. Then, fit connecting link into the groove at the head of spindle. Insert lever & spindle provided with lever cap and garter spring. Be sure to force in the hooked portion of return spring to the groove of lever & spindle as shown. Then, remove Puller (925471000).

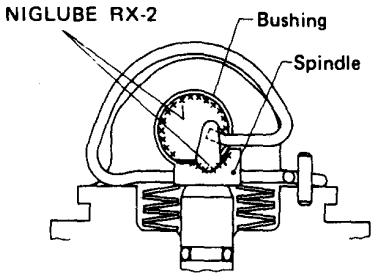

A17-224

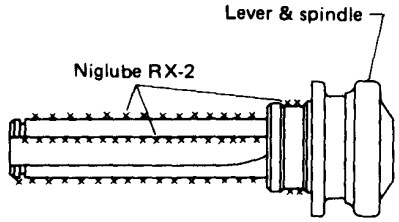

A17-225

Fig. 10-31 Grease application

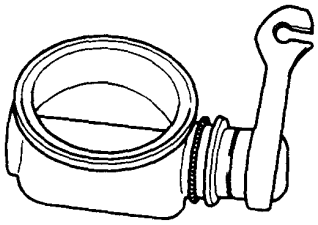

A17-129

Fig. 10-32 Lever & spindle, lever cap and garter spring in ASSY

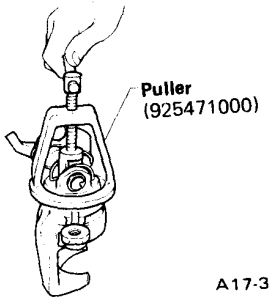

A17-311

Fig. 10-33 Inserting lever & spindle

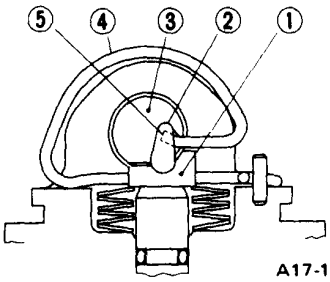

A17-198

1 Spindle
2 Connecting link
3 Lever & spindle
4 Return spring
5 Hooked portion of return spring

Fig. 10-34

NOTE:
When inserting the lever & spindle, make sure that the bushing of caliper body is clean and free from any foreign matter.

6) Fit snap ring into the groove of lever & spindle.
Apply NIGLUBE RX-2 grease (725191040 or 003606000) to the groove of caliper body in which lever cap is to be fitted and to snap ring. Apply sufficient amount of NIGLUBE RX-2 grease (725191040 or 003606000) to the space around connecting link and lever & spindle so as to fill inside of lever cap after fitting it.
Fit lever cap properly into the groove at the rear of caliper body.
Attach cap ring onto lever cap.

NOTE:
Be careful not to damage the lever cap by the edge of the cap ring.

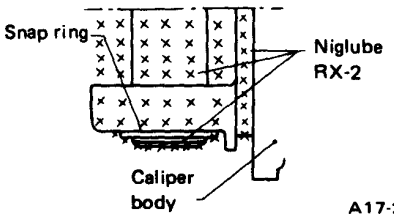

A17-237

Fig. 10-35 Grease application

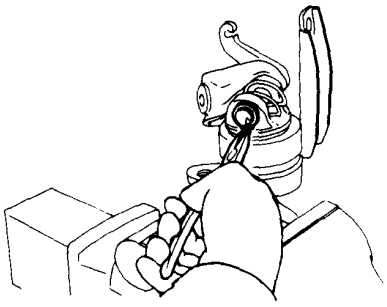

A17-121

Fig. 10-36 Fitting snap ring

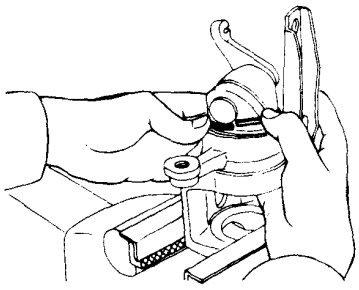

A17-133

Fig. 10-37 Installing cap ring

7) Remove any foreign matter from the fitting hole of guide pin in caliper body. Evenly tap the metal periphery of guide pin boot to insert. (Be careful not to scratch boot itself.)
After inserting, make sure that boot is not damaged.

NOTE:
When once the guide pin boot is removed, always replace it with a new one.

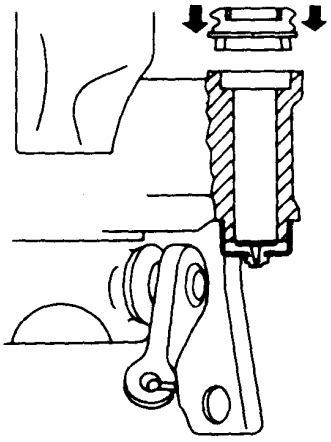

A17-312

Fig. 10-38 Installing guide pin boot

Downloaded from www.Manualslib.com manuals search engine

8) Install lock pin boot to caliper body. Apply Silicon Compound (725191050 or 003606010) to the inside of lock pin boot and around sleeve. Then insert sleeve into lock pin boot.

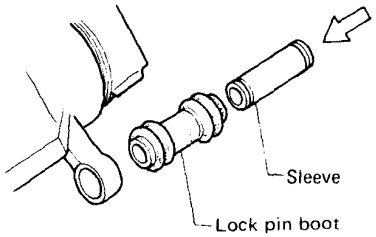

Fig. 10-39 Installing lock pin boot and sleeve

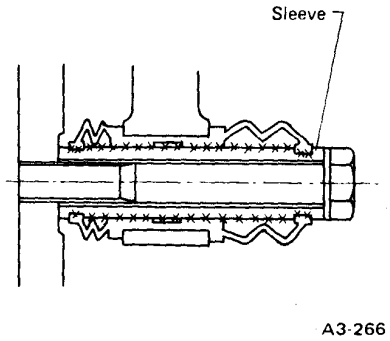

Fig. 10-40 Grease application to lock pin portion

9) Rotate piston until the notch at the head of piston comes in alignment with the center of disc, and make sure that all parts are properly attached.
10) Install support to housing.

Torque (Support bolt)	49 – 69 N·m (5.0 – 7.0 kg-m, 36 – 51 ft-lb)

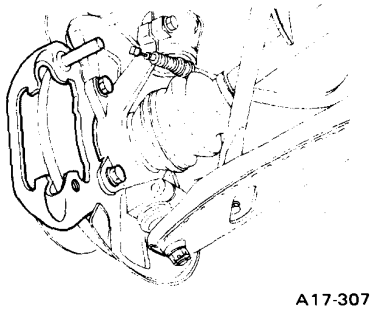

Fig. 10-41 Installing support

11) Install outer pad clip and inner pad clip properly.

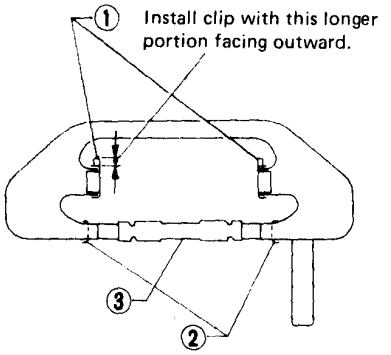

1 Outer pad clip
2 Inner pad clip
3 Inner pad clip

Fig. 10-42 Installing pad clips

12) Install outer pad and inner pad properly.
13) Make sure that caliper body and support are properly coated with grease. Insert the support guide pin into the fitting hole in caliper body. Tighten lock pin to the specified torque.

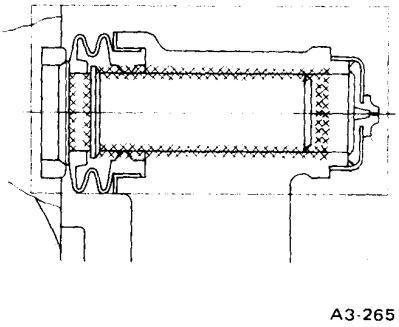

Fig. 10-43 Grease application to guide pin portion

Torque (Lock pin)	16 – 24 N·m (1.6 – 2.4 kg-m, 12 – 17 ft-lb)

NOTE:
a. Use only Silicon Compound (725191050 or 003606010) grease for the guide pin and lock pin portions.
b. After assembly, make sure that boots are properly fitted in the grooves on the guide pin and sleeve.
c. If the boot contains too much air and is expanded, press it to purge out some air.

14) Make sure that all parts are properly attached, then connect brake hose and hand brake cable.

Torque (Union bolt)	15 – 21 N·m (1.5 – 2.1 kg-m, 11 – 15 ft-lb)

NOTE:
Replace brake hose gaskets with new ones.

15) Bleed air from the brake system.

Torque (Air bleeder screw)	7 – 9 N·m (0.7 – 0.9 kg-m, 5.1 – 6.5 ft-lb)

Downloaded from www.Manualslib.com manuals search engine

10-3. Rear Brake

1. Component Parts

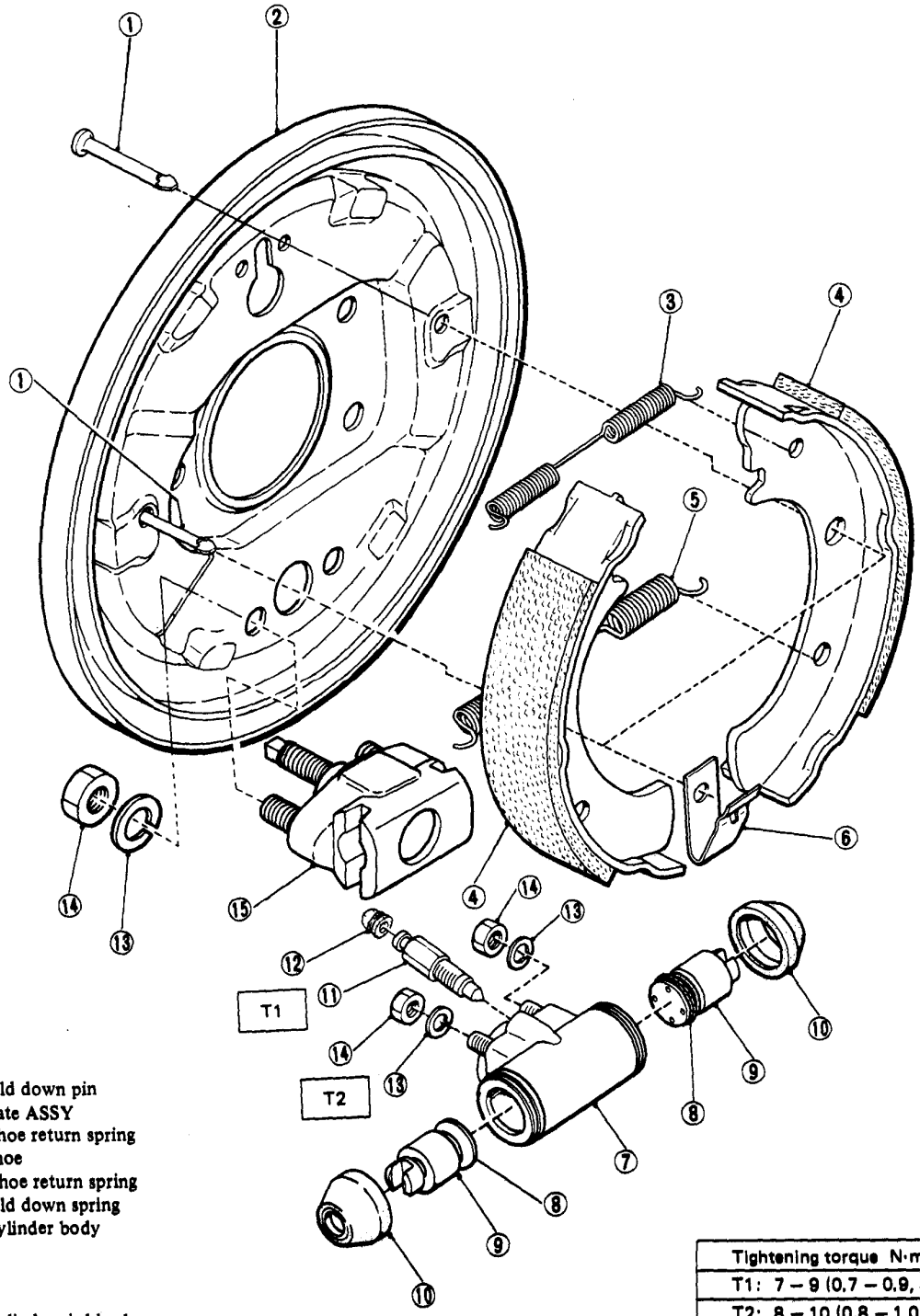

1 Shoe hold down pin
2 Back plate ASSY
3 Upper shoe return spring
4 Brake shoe
5 Lower shoe return spring
6 Shoe hold down spring
7 Wheel cylinder body
8 Cup
9 Piston
10 Boot
11 Wheel cylinder air bleeder screw
12 Air bleeder cap
13 Spring washer
14 Nut
15 Adjuster

Tightening torque N·m (kg-m, ft-lb)
T1: 7 – 9 (0.7 – 0.9, 5.1 – 6.5)
T2: 8 – 10 (0.8 – 1.0, 5.8 – 7.2)

Fig. 10-44 Component parts

A17-315

Downloaded from www.Manualslib.com manuals search engine

2. Removal

1) Loosen wheel nuts, jack up vehicle, support it with rigid racks, and remove wheels.
2) Unscrew brake pipe flare nut and disconnect brake pipe.

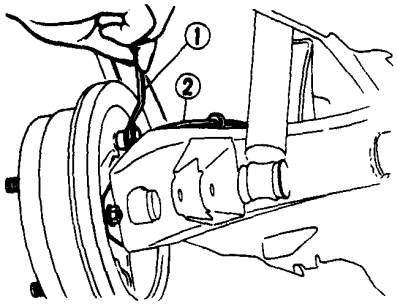

1 Flare nut wrench
2 Brake pipe
A17-240

Fig. 10-45 Removing flare nut

3) Remove brake drum, referring to "WHEELS AND AXLES" in chapter 9.
4) Unscrew back plate installing bolts and remove brake ASSY. Take care so that spindle shaft and bearing are free from dust.

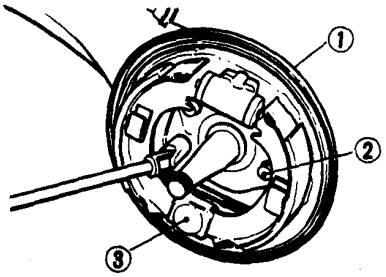

A17-042

1 Back plate
2 Back plate installing bolt
3 Adjuster

Fig. 10-46 Removing back plate

5) Remove shoe hold down spring with pliers.
6) Pull out shoe on anchor side.
7) Pull out shoe on cylinder side.

3. Inspection

1) If the inside surface of brake drum is streaked, correct the surface with emery cloth (#60). If it is unevenly worn, taperingly streaked, or the outside surface of brake drum is damaged, correct or replace it.

Standard inside diameter	180 mm (7.09 in)
Service limit	182 mm (7.17 in)

2) Measure the lining thickness. If it exceeds the limit, replace shoe ASSY.

Lining thickness	
Standard	5 mm (0.20 in)
Service limit	1.5 mm (0.059 in)

NOTE:
Replace the leading and trailing shoes on the right and left brake ASSY at the same time.

3) If the deformation or wear of back plate, shoe, etc. are notable, replace them.
4) When the shoe return spring tension is excessively weakened, replace it, taking care to identify upper and lower springs.
5) If grease has leaked from brake drum, replace oil seal or drum.
6) If drum bearing is abnormal or loose, replace it.

4. Installation

1) Assemble shoe ASSY with springs. Pay attention to the shape and installing position of springs.

	Upper	Lower
Wire diameter	Thin	Thick
Installing position	On wheel cylinder and back plate side.	On anchor and back plate side.

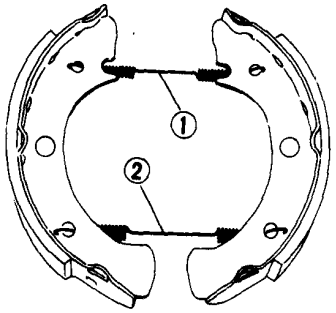

A17-043

1 Upper return spring
2 Lower return spring

Fig. 10-47 Assembling shoes

2) Apply brake grease (003602000) to the surface of back plate where shoe touches, the contacting surfaces of anchor and shoe web, and the contacting surfaces of wheel cylinder piston and shoe web.
3) Fit shoe ASSY first to wheel cylinder, then to anchor, and secure both shoes with shoe hold down springs.
4) Adjust the shoe diameter to about 179.8 mm (7.08 in) by turning the wedge. Measure the shoe diameter at three positions, upper, middle, and lower position.
5) Tighten temporarily brake pipe flare nut.
6) Fit spacer (seal) onto spindle and install back plate. In this case, center by using the outer circumference of spacer as a faucet joint. Insert three bolts from the back plate side.

Torque (Back plate)	46 – 58 N·m (4.7 – 5.9 kg-m, 34 – 43 ft-lb)

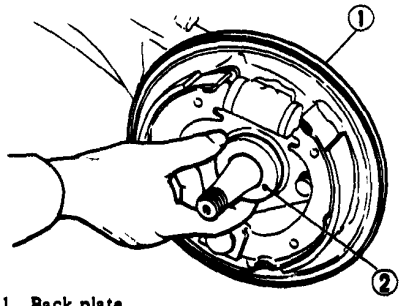

1 Back plate
2 Spacer
A17-044

Fig. 10-48 Installing back plate

NOTE:
Do not allow foreign matters to enter the brake ASSY.

Downloaded from www.Manualslib.com manuals search engine

7) Tighten brake pipe flare nut to the specified torque.

Torque	13 – 18 N·m (1.3 – 1.8 kg-m, 9 – 13 ft-lb)

8) Install brake drum in parallel with brake ASSY.
9) Bleed air from the brake system.

Torque (Air bleeder screw)	7 – 9 N·m (0.7 – 0.9 kg-m, 5.1 – 6.5 ft-lb)

5. Adjustment of Rear Brake Lining Clearance

The adjusting mechanism for the brake lining clearance is of a manual type.
Follow the undermentioned procedure.
1) Jack up vehicle body to release wheel from the ground.
2) Tighten the wedge fully until wheel ceases to rotate. Screwing up the wedge forces anchor to expand on either side by the wedge action and consequently shoes stick to drum.
3) Turn back the wedge for 180°, and the shoe clearance will be 0.1 to 0.15 mm (0.004 to 0.0059 in).
4) Be sure that tire and wheel can be rotated easily by hand.

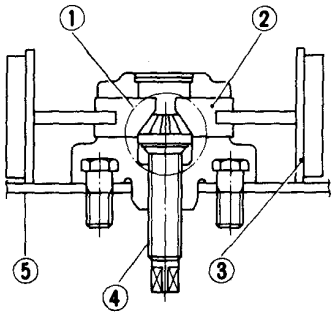

1 Wedge
2 Anchor
3 Brake shoe
4 Adjuster
5 Back plate

Fig. 10-49 Adjusting mechanism

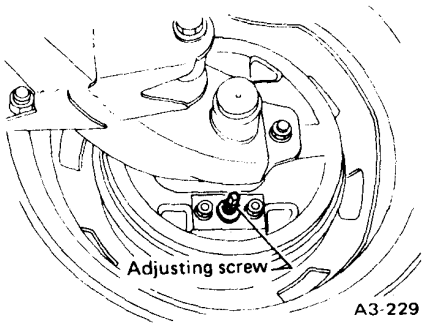

Fig. 10-50 Adjusting shoe clearance

6. Wheel Cylinder

1) Disassembly

1) Remove boot from cylinder.
2) Take out piston, which is piston ASSY with cup.

NOTE:

a. Wheel cylinder can be disassembled and inspected with it mounted on the back plate. Therefore it should not be removed except replacing the wheel cylinder ASSY etc.

b. When removing the cup from piston, be careful not to damage piston. And be sure to use the new cup.

2) Inspection

Inspect each parts after washing them with brake fluid, and replace if the following defects are found.

NOTE:

Do not use any cleaning solvent other than brake fluid.

1) Cup: Damage, fatigue or wear.
2) Cylinder and piston frictional surfaces: damage, uneven wear, corrosion or rust.

3) Assembly

Assembly is the reverse order of disassembly.

NOTE:

a. When installing the cup, use the special tool Adapter, apply brake fluid to the frictional surface for smooth installation and pay attention to cup direction.

b. When replacing the repair kit, make sure that the sizes of cylinder and cup are the same as those which were replaced.

c. Special tools (Adapters) are available in different sizes. Use only the tool of the correct size.

Adapter	
Part No.	Applicable size
925450000	15.87 mm (5/8 in)
925460000	17.46 mm (11/16 in)

d. While assembling, be careful to prevent any metal chip, dust or dirt from entering the wheel cylinder.

Downloaded from www.Manualslib.com manuals search engine

10-4. Master Cylinder

1. Component Parts

1 Cylinder body
2 Primary piston ASSY
3 Secondary piston ASSY
4 Piston stopper washer
5 Stopper ring
6 Stopper screw
7 Gasket
8 Bolt
9 Brake fluid reservoir
10 Brake fluid level indicator assembly
11 Check valve spring
12 Check valve
13 Tube seat
14 Check valve cap
15 Filter
16 Reservoir seal

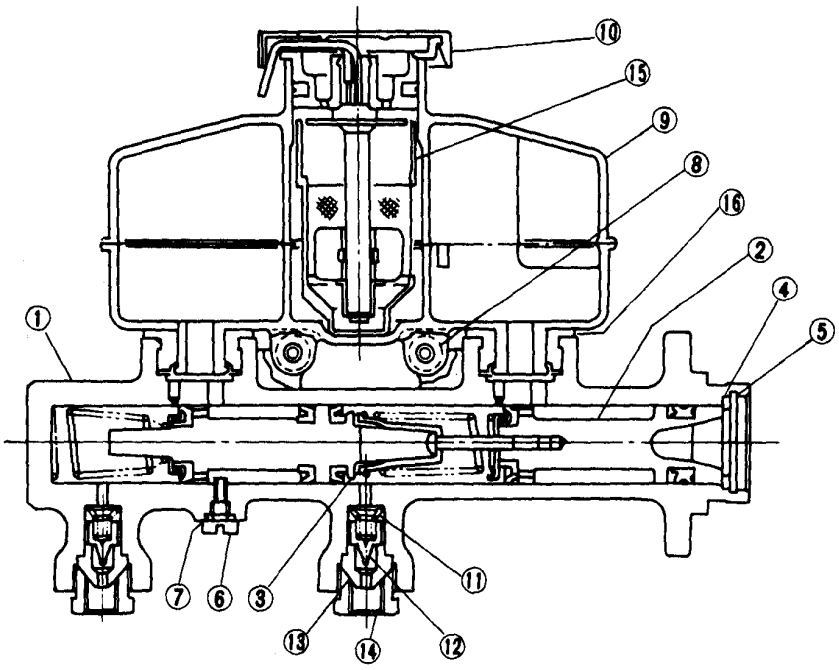

Fig. 10-51 Cross section of tandem master cylinder

2. Removal

NOTE:
Put cloth etc. to prevent the brake fluid from spilling onto the painted surface and then perform the work.

1) Disconnect connector for brake fluid level indicator.
2) Remove nuts connecting brake pipes to master cylinder.

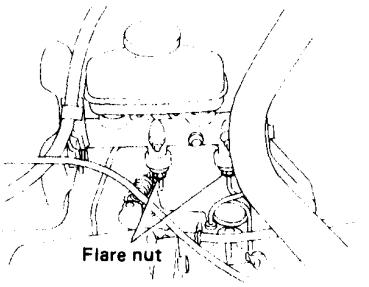

Fig. 10-52 Removing nuts

3) Remove nuts connecting master cylinder to brake booster.

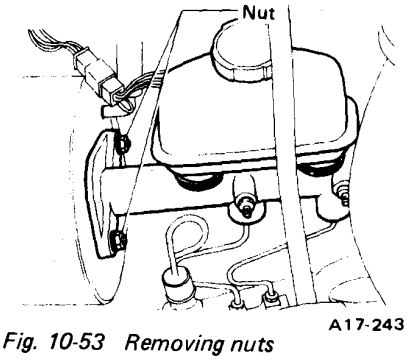

Fig. 10-53 Removing nuts

4) Pull master cylinder out forward.

3. Disassembly

1) Remove level indicator assemblies and filters, then drain out brake fluid.
2) Remove stopper screw while pushing piston fully into cylinder.

NOTE:
Remove stopper screw at the position where secondary piston does not contact stopper screw by pushing primary piston using screwdriver.

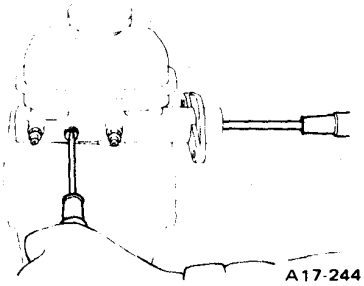

Fig. 10-54 Removing stopper screw

3) Remove stopper ring while pressing piston into cylinder with a screwdriver etc.

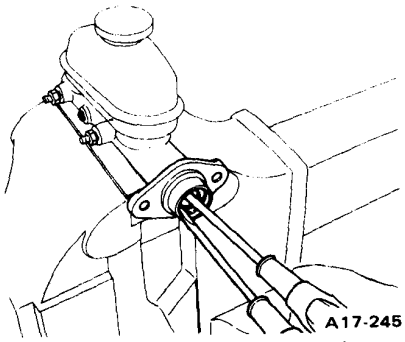

Fig. 10-55 Removing stopper ring

Downloaded from www.Manualslib.com manuals search engine

4) Remove stopper washer, primary and secondary piston ASSY, and return spring.

NOTE:

a. Do not disassemble primary and secondary piston ASSY.

b. When replacing piston cup etc., replace as a piston ASSY.

5) Check valve can be disassembled easily by removing check valve cap.

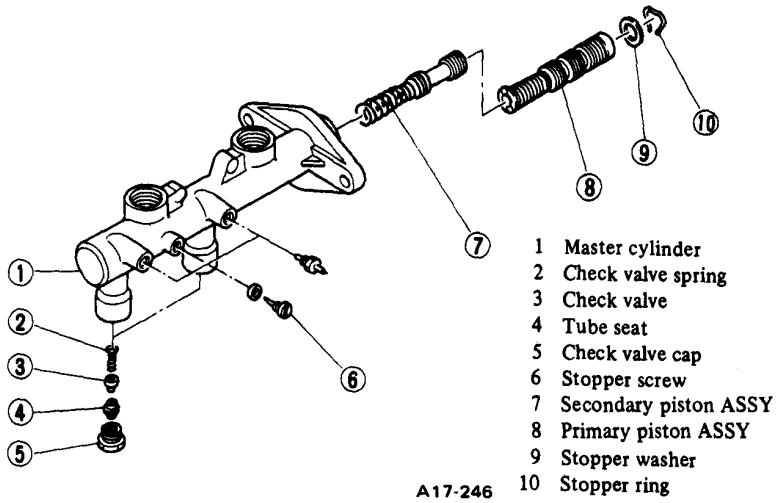

Fig. 10-56 Disassembling master cylinder

NOTE:

a. Never remove and/or disassemble reservoir unless reservoir seal is damaged. Replace it with new one if necessary.

b. Level indicator is removed by turning it counterclockwise; installation is clockwise.

4. Inspection

Inspect all parts after washing them with brake fluid, and replace if the following defects are found.

NOTE:

Do not use any cleaning solvent other than brake fluid.

1) Cylinder and piston frictional surfaces: damage, uneven wear, corrosion or rust.

2) Primary and secondary cups, check valve: damage, wear or fatigue.

3) Return spring and check valve spring: Fatigue or deformation.

5. Assembly

Assembly is the reverse order of disassembly.

Torque (Check valve cap)	25 – 34 N·m (2.5 – 3.5 kg-m, 18 – 25 ft-lb)
Torque (Stopper screw)	1.5 – 2.9 N·m (0.15 – 0.3 kg-m, 1.1 – 2.2 ft-lb)

NOTE:

a. Replace gasket with a new one.

b. Be careful not to damage cylinder and piston cup etc.

c. Install stopper screw while pushing primary piston so that secondary piston is fully pushed.

d. Applying the brake fluid to frictional portion facilitates the work.

6. Installation

1) Install master cylinder to brake booster.

Torque (Master cylinder nut)	10 – 16 N·m (1.0 – 1.6 kg-m, 7 – 12 ft-lb)

2) Connect brake pipes with master cylinder.

Torque (Brake pipe flare nut)	13 – 18 N·m (1.3 – 1.8 kg-m, 9 – 13 ft-lb)

NOTE:

Make sure that the piping is correct.

Primary system	Front right – Rear left
Secondary system	Front left – Rear right

3) Connect connector.

4) Bleed air from brake system.

Torque (Air bleeder screw)	7 – 9 N·m (0.7 – 0.9 kg-m, 5.1 – 6.5 ft-lb)

Downloaded from www.Manualslib.com manuals search engine

10-5. Brake Booster (Master-Vac)

1. Construction

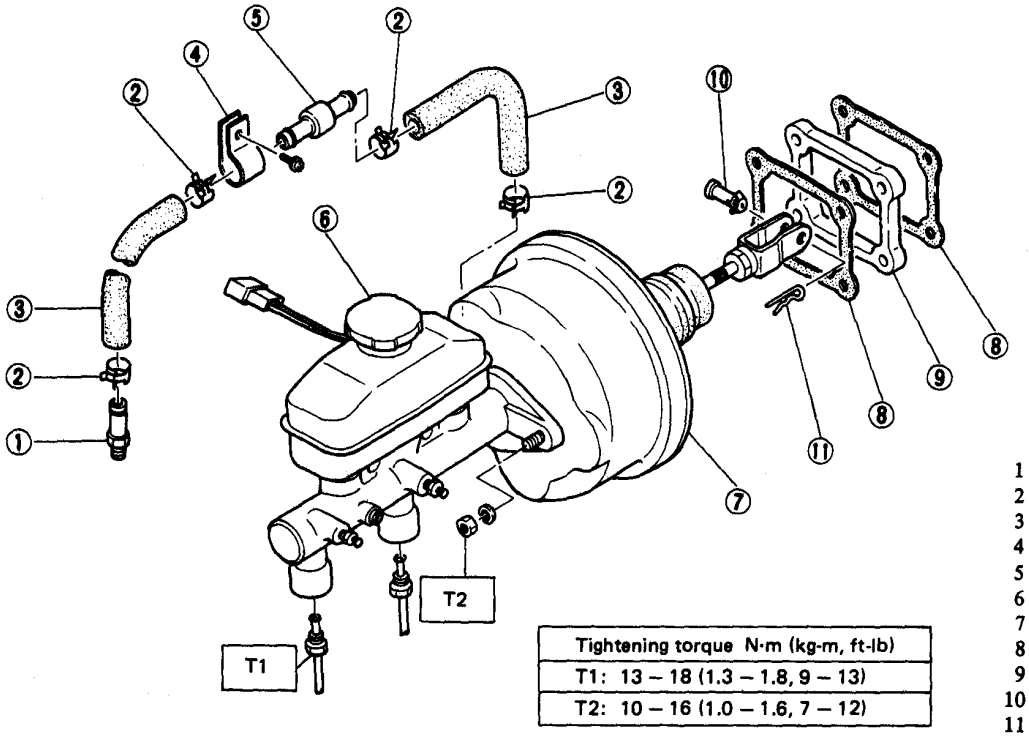

Tightening torque N·m (kg-m, ft-lb)
T1: 13 – 18 (1.3 – 1.8, 9 – 13)
T2: 10 – 16 (1.0 – 1.6, 7 – 12)

1 Vacuum hose joint bolt
2 Clip
3 Vacuum hose
4 Clamp
5 Check valve
6 Master cylinder ASSY
7 Brake booster (Master-Vac)
8 Seal
9 Spacer
10 Clevis pin
11 Snap pin

A17-317

Fig. 10-57 Brake booster (Master-Vac)

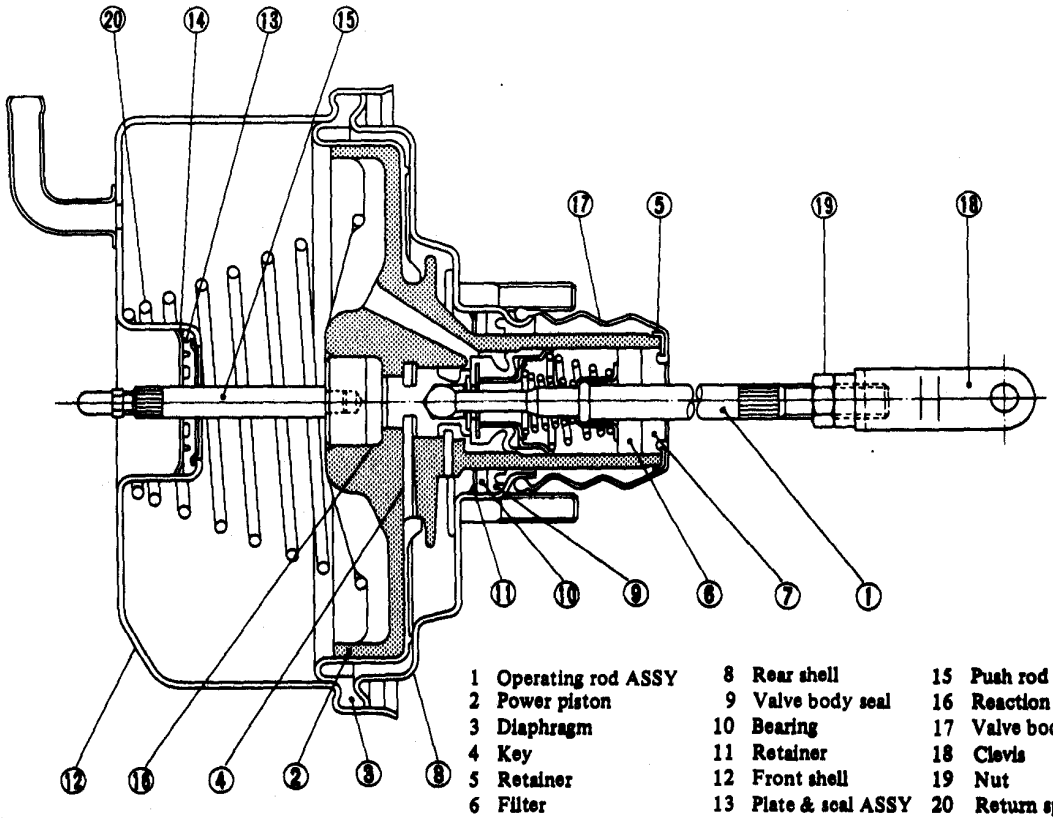

1 Operating rod ASSY
2 Power piston
3 Diaphragm
4 Key
5 Retainer
6 Filter
7 Silencer
8 Rear shell
9 Valve body seal
10 Bearing
11 Retainer
12 Front shell
13 Plate & seal ASSY
14 Retainer
15 Push rod
16 Reaction disc
17 Valve body guard
18 Clevis
19 Nut
20 Return spring

A17-248

Fig. 10-58 Cross section of brake booster

Downloaded from www.Manualslib.com manuals search engine

2. Removal

1) Remove the following parts at engine compartment.
a. Disconnect connector for brake fluid level indicator.
b. Remove nuts connecting brake pipes to master cylinder.
c. Remove master cylinder installing nuts.
d. Disconnect vacuum hose from brake booster.
2) Remove the following parts from the pedal bracket.
a. Snap pin and clevis pin.
b. Four brake booster installing nuts.
3) Remove brake booster while shunning brake pipes.

3. Installation

1) Mount brake booster in position.

Torque (Brake booster to toe board)	13 – 23 N·m (1.3 – 2.3 kg-m, 9 – 17 ft-lb)

2) Connect operating rod to brake pedal with clevis pin and snap pin.

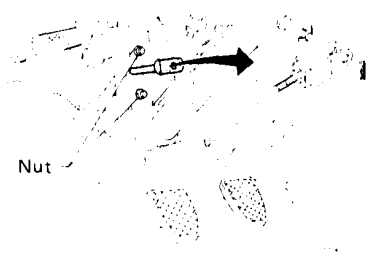

Fig. 10-59

3) Connect vacuum hose to brake booster.
4) Mount master cylinder onto brake booster.

Torque (Nut)	10 – 16 N·m (1.0 – 1.6 kg-m, 7 – 12 ft-lb)

5) Connect brake pipes to master cylinder.

Torque (Brake pipe flare nut)	13 – 18 N·m (1.3 – 1.8 kg-m, 9 – 13 ft-lb)

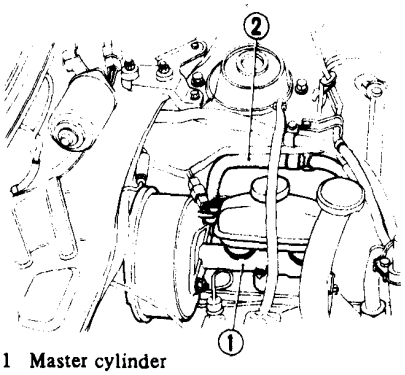

1 Master cylinder
2 Vacuum hose

Fig. 10-60

6) Connect electric connector for brake fluid level indicator.
7) Tightening lock nut on operating rod ASSY.
If brake pedal is not contacted stopper, adjust clevis to contact stopper, then tighten lock nut.

NOTE:
The brake pedal should contact stopper without being depressed.

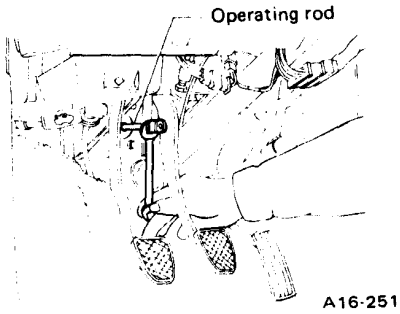

Fig. 10-61 Tightening lock nut on operating rod ASSY

8) Bleed air from brake system.

Torque (Air bleeder screw)	7 – 9 N·m (0.7 – 0.9 kg-m, 5.1 – 6.5 ft-lb)

4. Operation Check

NOTE:
When checking operation, be sure to securely apply the hand brake.

1) Checking without Using Gauges

This method cannot determine the exact portion which has failed, but it can provide a rough understanding of the nature of the failure if checking is conducted in accordance with the following procedure.

a. Air tightness check

Start engine, and run it for 1 to 2 minutes, then turn it off. Depress brake pedal several times applying the same pedal force as that used in ordinary braking operations. The pedal stroke should be greatest on the 1st depression, and it should become smaller with each successive depression. If no change occurs in the pedal height while in a depressed state, brake booster is faulty.

NOTE:
In the event of defective operation, inspect the condition of the check valve and vacuum hose. Replace them if faulty and conduct the test again. If no improvement is observed, check precisely with gauges.

b. Operation check

(1) With engine off, depress brake pedal several times applying the same pedal force and make sure that the pedal height does not vary with each depression of the pedal.
(2) With brake pedal depressed, start engine.
(3) As engine starts, brake pedal should move slightly toward the floor. If no change occurs in the pedal height, brake booster is faulty.

NOTE:
If faulty, check precisely with gauges.

c. Loaded air tightness check

Depress brake pedal while engine is running, and turn off engine while the pedal is still depressed. Keep the pedal depressed for 30 seconds; if no change occurs in the pedal height, brake booster is functioning normally; if the pedal height increases, it is faulty.

NOTE:
If faulty, check precisely with gauges.

2) Checking with Gauges

Connect gauges as shown in figure. After bleeding air from pressure gauges, proceed to each check.

Downloaded from www.Manualslib.com manuals search engine

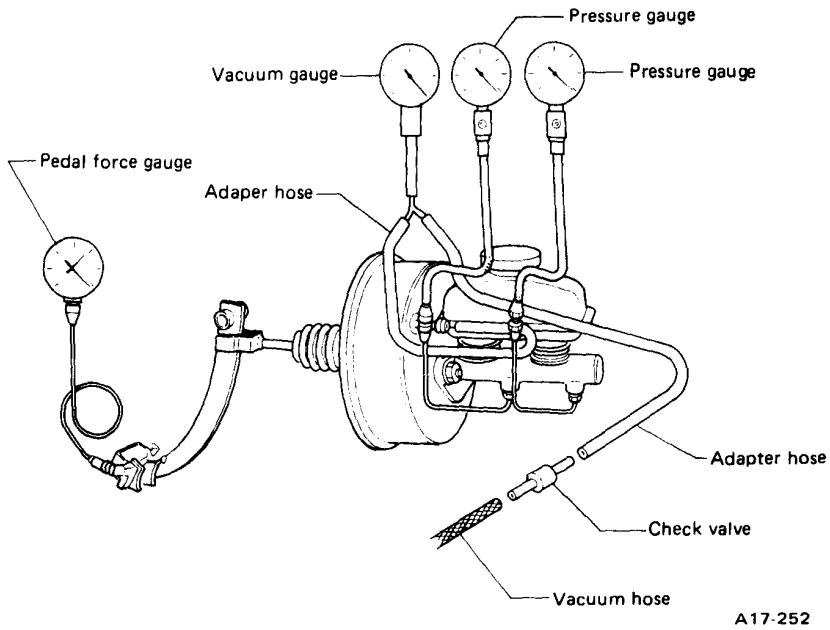

Fig. 10-62 Connection of gauges

a. Air tightness check

(1) Start engine and keep it running until a vacuum of 66.7 kPa (500 mmHg, 19.69 inHg) is indicated on vacuum gauge. Do not depress brake pedal.

(2) Stop engine and watch the gauge. If the vacuum drop range is less than 3.3 kPa (25 mmHg, 0.98 inHg) within 15 seconds after stopping engine, brake booster is functioning properly.

If defective, the cause may be one of those listed below.

- Check valve malfunction
- Leak from vacuum hose
- Leak from the shell jointed portion or stud bolt welded portion
- Damaged diaphragm
- Leak from valve body seal and bearing portion
- Leak from plate & seal ASSY portion
- Leak from poppet valve ASSY portion

b. Loaded air tightness check

(1) Start engine and depress brake pedal with pedal force of 196 N (20 kg, 44 lb). Keep engine running until a vacuum of 66.7 kPa (500 mmHg, 19.69 inHg) is indicated on vacuum gauge while the pedal is still depressed.

(2) Stop engine and watch vacuum gauge.
If the vacuum drop range is less than 3.3 kPa (25 mmHg, 0.98 inHg) within 15 seconds after stopping engine, brake booster is functioning properly.
If defective, refer to a. described above.

c. Lack of boosting action check

Turn off engine, and set the vacuum gauge reading at "0". Then, check the fluid pressure when brake pedal is depressed. The pressure must be greater than the standard value listed below.

Pedal force N (kg, lb)	Fluid pressure kPa (kg/cm², psi)
147 (15, 33)	392 (4, 57)
294 (30, 66)	2,550 (26, 370)

d. Boosting action check

Set the vacuum gauge reading at 66.7 kPa (500 mmHg, 19.69 inHg) by running engine. Then, check the fluid pressure when brake pedal is depressed. The pressure must be greater than the standard value listed below.

Pedal force N (kg, lb)	Fluid pressure kPa (kg/cm², psi)
147 (15, 33)	3,432 (35, 498)
294 (30, 66)	For 152.4 mm (6 in) booster: 5,884 (60, 853) For 177.8 mm (7 in) booster: 6,865 (70, 995)

5. Handling Precautions

1) After protector has been removed from push-rod, do not turn the master cylinder side of brake booster downwards.

a. If the master cylinder side is turned downwards, push-rod may come loose by virtue of its own weight, and reaction disc may drop into brake booster.

b. Whether or not reaction disc has dropped can be determined by measuring the dimension "ℓ".
The projected amount "ℓ" of push-rod should be as follows:

Standard (Correct): ℓ = 10 mm (0.39 in)
Incorrect: ℓ = 5.5 mm (0.217 in)

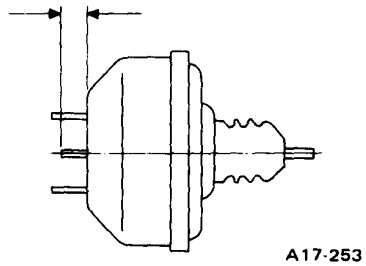

Fig. 10-63 Push rod projection

c. If protector is fitted correctly, reaction disc will not fall out.

2) Be careful not to drop brake booster. Brake booster should be discarded if it has been dropped.

3) Use special care when handling operating rod.
If excessive force is applied to operating rod, sufficient to cause a change in the angle in excess of ±3°, it may result in damage to the power piston cylinder.

4) Use care when placing brake booster on the floor.

Downloaded from www.Manualslib.com manuals search engine

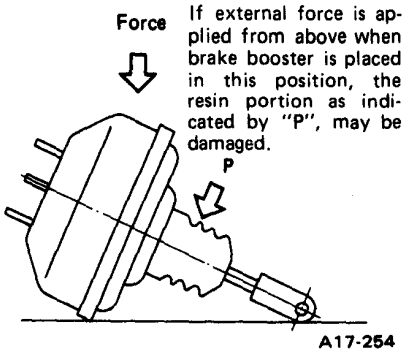

Fig. 10-64 Handling precaution

10-6. Parking (Hand) Brake

1. Component Parts

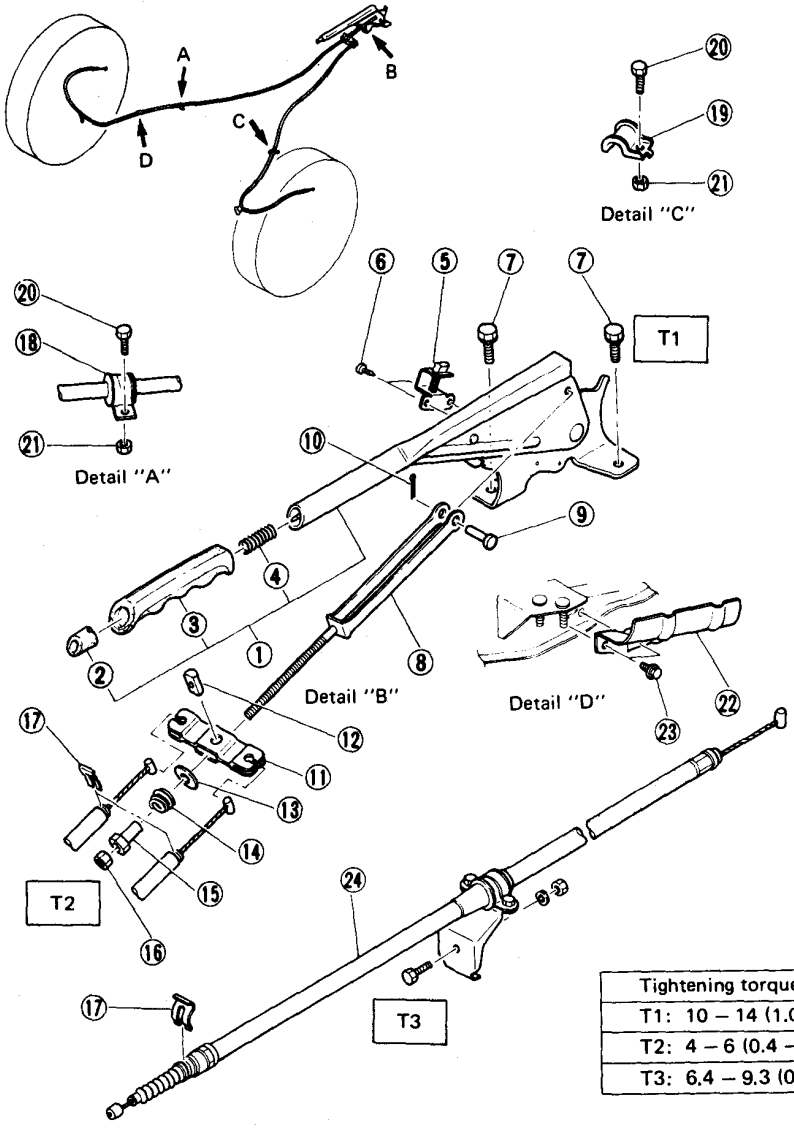

1 Hand brake lever ASSY
2 Hand brake lever button
3 Hand brake lever grip
4 Hand brake lever spring
5 Hand brake switch
6 Flange tapping screw
7 Bolt & washer
8 Hand brake rod CP
9 Clevis pin
10 Cotter pin
11 Equalizer
12 Hand brake pin
13 Washer
14 Hand brake spring
15 Hand brake adjuster
16 Nut
17 Clamp
18 Hand brake clamp
19 Hand brake clamp
20 Bolt & washer
21 Flange nut
22 Hand brake cover
23 Flange bolt
24 Hand brake cable ASSY

Tightening torque N·m (kg-m, ft-lb)
T1: 10 – 14 (1.0 – 1.4, 7 – 10)
T2: 4 – 6 (0.4 – 0.6, 2.9 – 4.3)
T3: 6.4 – 9.3 (0.65 – 0.95, 4.7 – 6.9)

Fig. 10-65 Component parts of Hand brake

Downloaded from www.Manualslib.com manuals search engine

2. Parking (Hand) Brake Lever

• Replacement

1) Remove parking brake cover.
2) Disconnect electric connector for parking brake switch.
3) Loosen parking brake adjuster, and remove inner cable end from equalizer.
4) Remove parking brake lever.

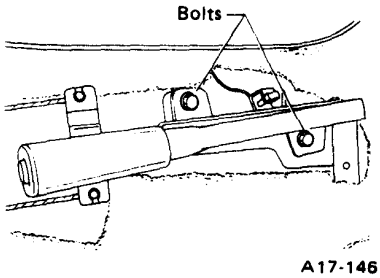

Fig. 10-66 Removing hand brake lever

5) Install parking brake lever in the reverse order of removal.

Torque (Lever installing bolt)	10 – 14 N·m (1.0 – 1.4 kg-m, 7 – 10 ft-lb)

6) Adjust parking brake. (See "Adjustment of parking brake".)

3. Parking (Hand) Brake Cable

• Replacement

1) Loosen front wheel nuts.
2) Jack up vehicle, and support it with safety stands (rigid racks).
3) Remove front tires and wheels.
4) Remove parking brake cover.
5) Loosen parking brake adjuster, then remove inner cable end from equalizer, and detach clamps.

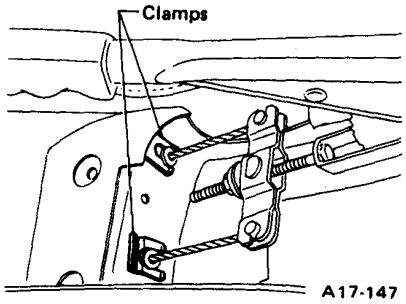

Fig. 10-67 Removing clamp

6) Pull out parking brake cable clamp from caliper, and disconnect cable end.

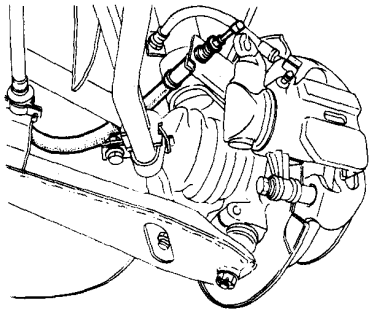

Fig. 10-68 Removing hand brake cable end

7) Remove bolt and bracket from transverse link.

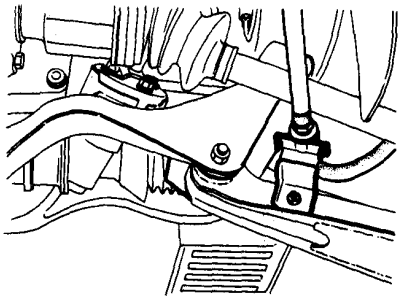

Fig. 10-69 A17-185

8) Remove bolt and clamp from rear crossmember bracket.

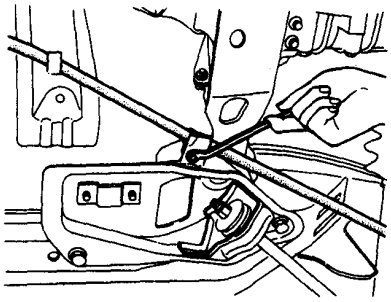

Fig. 10-70

9) Detach parking brake cable from cable guide at rear crossmember.

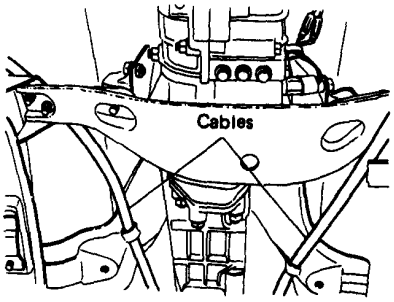

Fig. 10-71 A17-148

10) Remove cable ASSY from cabin by forcibly pulling it forward.
11) Install (new) parking brake ASSY in the reverse order of removal.

NOTE:
Be sure to pass cable through cable guide inside the tunnel.

Torque (Rear cross-member cable clamp)	6.4 – 9.3 N·m (0.65 – 0.95 kg-m, 4.7 – 6.9 ft-lb)
Torque (Bracket to transverse link)	

4. Adjustment of Parking (Hand) Brake

After adjusting the rear brake shoe clearances, depress brake pedal several times, and check the depressed height (floor to the upper surface of brake pedal pad).
Make sure that the distance above is as specified [more than 80 mm (3.15 in)], then perform the following operations.

NOTE:
a. Bleed air completely from the brake system before attempting the following operations.
b. Confirm that parking brake lever of caliper returns fully after slackening parking brake cable.

1) Forcibly pull hand brake lever 3 to 5 times.
2) Adjust hand brake lever by turning adjuster until the play at the A portion is set at 0 to 0.5 mm (0 to 0.020 in), then lock adjuster.

Downloaded from www.Manualslib.com manuals search engine

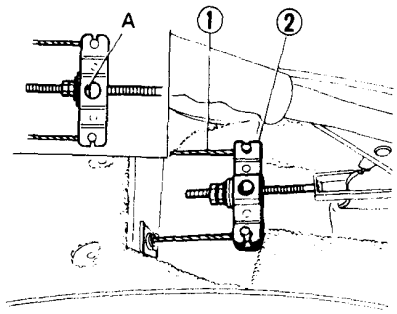

1 Cable
2 Equalizer

A17-149

Fig. 10-72

Torque (Adjuster lock nut)	4 – 6 N·m (0.4 – 0.6 kg-m, 2.9 – 4.3 ft-lb)

3) Repeat depressing brake pedal slightly, and confirm that the hand brake becomes effective with a lever stroke of 3 to 4 notches when pulled with a force of 245 N (25 kg, 55 lb).

4) Forcibly pull hand brake lever 3 to 5 times and rotate tire and wheel several times by hand. Then wind a rope around the circumference of tire, and confirm that tire and wheel can be rotated with a force of less than 39 N (4 kg, 9 lb).

10-7. Replacement of Brake Fluid

NOTE:

a. Recommended brake fluid FMVSS No. 116, DOT3.

b. To always maintain the brake fluid characteristics, replace the brake fluid according to maintenance schedule or earlier than that when used in severe condition.

c. The brake piping consists of a dual system, cross design. The piping on primary side connects the front right brake and the rear left brake, and the piping on secondary side connects the front left brake and rear right brake.

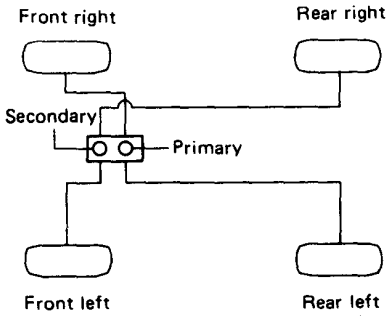

Fig. 10-73

A17-150

Always begin replacing the brake fluid on the primary side and subsequently work on secondary side.

1. Replacement Procedure

1) Remove filler cap from brake fluid reservoir. Install one end of a vinyl tube onto air bleeder of master cylinder and insert the other end of tube into a container to collect brake fluid. To drain the fluid into container, open air bleeder and repeatedly depress and release brake pedal until a small amount of fluid remains in reservoir.

2) Refill reservoir with recommended brake fluid. To refill reservoir, slowly and repeatedly depress and release brake pedal completely until a solid stream of brake fluid (containing no air bubbles) runs through vinyl tube. Then securely tighten air bleeder of master cylinder.

2) Install one end of a vinyl tube onto air bleeder of wheel cylinder located farthest from master cylinder and put the other end of the tube into container for receiving brake fluid.

4) Open air bleeder, and depress and release brake pedal until old brake fluid is drained out and new fluid flows through vinyl tube. Then close the bleeder.

NOTE:

Add brake fluid as necessary while performing the air bleed operation, in order to prevent reservoir from running short of brake fluid.

5) Use the same procedure as the one described above to change brake fluid of front wheel cylinder.

6) Always start with the primary side and then work on the secondary side.

7) Reconfirmation

Bleed air from the brake lines as follows in the order shown below in figure.

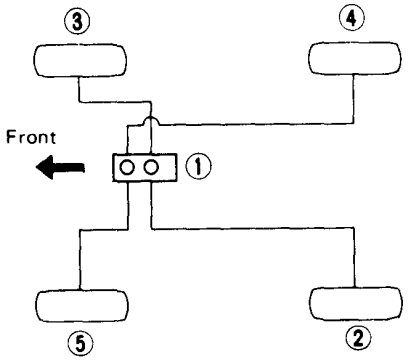

A17-151

Fig. 10-74 Air bleeding order

a. Install one end of a vinyl tube onto air bleeder screw and put the other end into container.

b. Attach a wrench to bleeder screw, but do not loosen it at this point.

c. Instruct your co-worker to depress brake pedal slowly 2 or 3 times and then hold it depressed.

d. Loosen bleeder screw approximately 1/4 turn until a small amount of brake fluid drains into container, and then quickly tighten the screw.

e. Repeat steps c) and d) above until there are no air bubbles in the drained brake fluid.

NOTE:

Add brake fluid as necessary while performing the air bleed operation, in order to prevent reservoir from running short of brake fluid.

Downloaded from www.Manualslib.com manuals search engine

f. After completing the bleeding operation, hold brake pedal depressed and tighten the screw and install bleeder cap.

Torque (Air bleeder screw)	7 – 9 N·m (0.7 – 0.9 kg-m, 5.1 – 6.5 ft-lb)

2. Air Bleeding

Air in wheel cylinder will cause brake pedal to feel spongy, and also make the pedal stroke longer, which can lead to an accident. Upon completion of the disassembly and assembly of the brake, or after brake hose replacement etc., be sure to bleed air from the brake system.

1) Air Bleeding Procedure

Replenish brake fluid reservoir with new recommended brake fluid, and start bleeding air from wheel cylinder located farthest from master cylinder. Bleed air according to 1, 7) Reconfirmation.

2) Check after Bleeding Air

1) Brake fluid leakage
Depress brake pedal strongly and hold it there for approximately 20 seconds. At this time check the pedal to see if it shows any unusual movement, visually inspect bleeder screws and brake pipe joints to make sure that there is no fluid leakage.

2) Proper air bleeding
Depress brake pedal to determine if its operation and stroke length are correct.

3) Fluid level in reservoir
Fill reservoir with brake fluid up to the "MAX" level.

4) Drive car in low speed and depress brake pedal a little strongly several times to make sure that the brakes are operating properly.

NOTE:

a. Use recommended brake fluid.
b. Always use new brake fluid.
c. The boiling point of the brake fluid lowers as it absorbs moisture from the air; be careful to protect the brake fluid from contact with air during storage.

Downloaded from www.Manualslib.com manuals search engine

10-8. Brake Line

1. Component Parts

- Non-BRAT

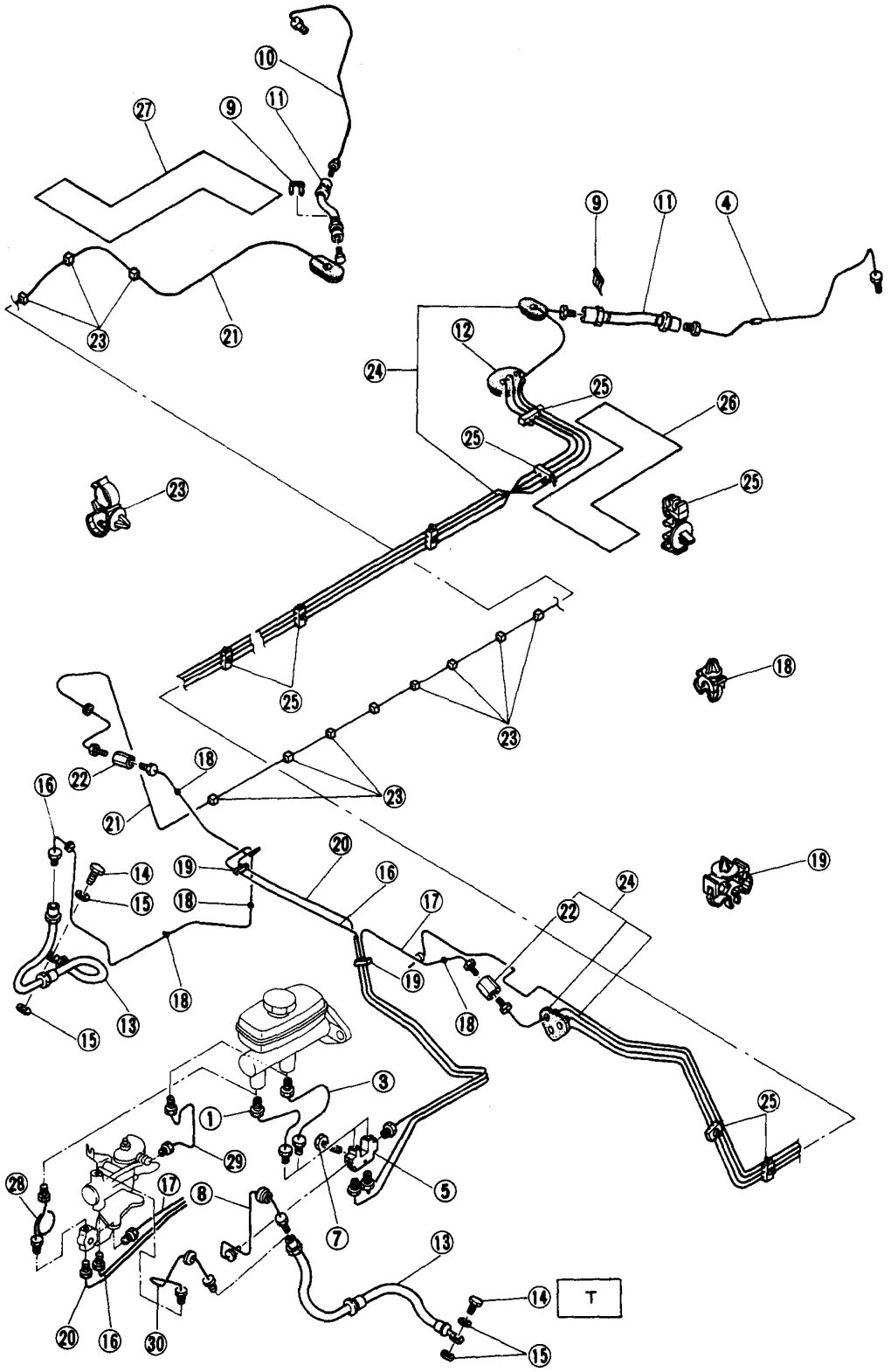

1 Brake pipe (Secondary)
3 Brake pipe (Primary)
4 Brake pipe (Rear L.H.)
5 2-3 way connector
7 Bolt ASSY
8 Brake pipe (Front L.H.)
9 Brake hose clamp
10 Brake pipe (Rear R.H.)
11 Brake hose (Rear)
12 Grommet (Fuel pipe)
13 Brake hose (Front)
14 Union bolt
15 Gasket
16 Brake pipe (Front R.H.)
17 Brake pipe (CTR. F. L.H.)
18 Clamp 5
19 Clamp 5-5-5
20 Brake pipe (CTR. F. R.H.)
21 Brake pipe (CTR. R.H.)
22 2-way connector
23 Clamp 7-15
24 Pipe ASSY (CTR. L.H.)
25 Clamp 5-7-8-6
26 Brake pipe cover (R.H.)
27 Brake pipe cover (L.H.)
28 Brake pipe (Secondary)
29 Brake pipe (Primary)
30 Brake pipe (Front L.H.)

Tightening torque N·m (kg-m, ft-lb)
T: 15 – 21 (1.5 – 2.1, 11 – 15)

Fig. 10-75 Component parts of brake line (Non-BRAT)

A17-320

Downloaded from www.Manualslib.com manuals search engine

• BRAT

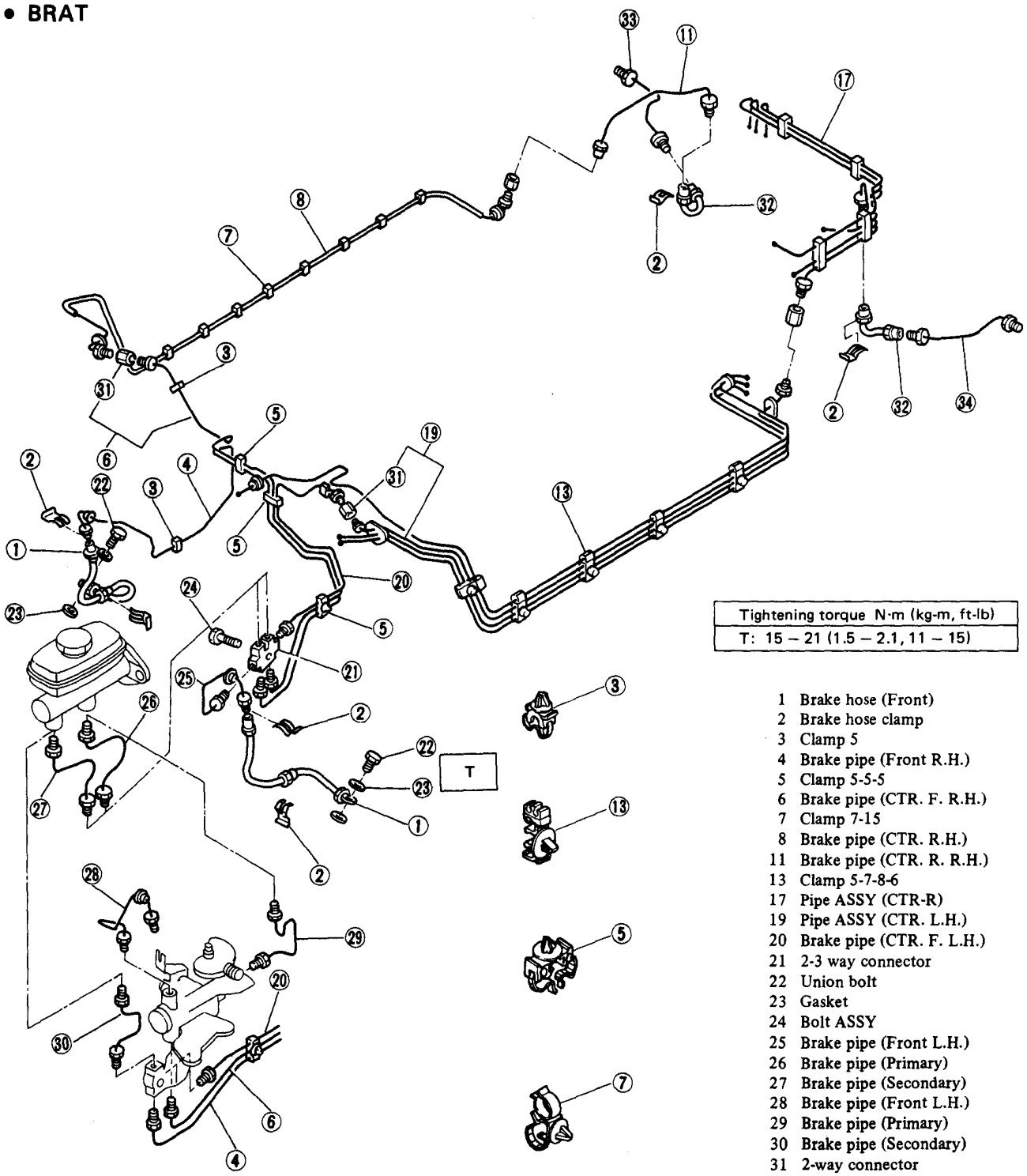

Tightening torque N·m (kg-m, ft-lb)
T: 15 – 21 (1.5 – 2.1, 11 – 15)

1 Brake hose (Front)
2 Brake hose clamp
3 Clamp 5
4 Brake pipe (Front R.H.)
5 Clamp 5-5-5
6 Brake pipe (CTR. F. R.H.)
7 Clamp 7-15
8 Brake pipe (CTR. R.H.)
11 Brake pipe (CTR. R. R.H.)
13 Clamp 5-7-8-6
17 Pipe ASSY (CTR-R)
19 Pipe ASSY (CTR. L.H.)
20 Brake pipe (CTR. F. L.H.)
21 2-3 way connector
22 Union bolt
23 Gasket
24 Bolt ASSY
25 Brake pipe (Front L.H.)
26 Brake pipe (Primary)
27 Brake pipe (Secondary)
28 Brake pipe (Front L.H.)
29 Brake pipe (Primary)
30 Brake pipe (Secondary)
31 2-way connector
32 Brake hose (Rear)
33 Brake pipe (Rear R.H.)
34 Brake pipe (Rear L.H.)

A17-321

Fig. 10-76 Component parts of brake line (BRAT)

Downloaded from www.Manualslib.com manuals search engine

2. Brake Hose

1) Removal

1) Separate brake pipe from brake hose.
(Always use flare nut wrench and be careful not to deform flare nut.)

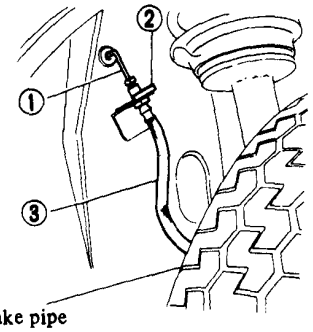

1 Brake pipe
2 Clamp
3 Brake hose

A17-155

Fig. 10-77 Separating brake pipe

2) Pull out clamp to remove brake hose.
3) In case of front disc brake, remove union bolt and pass the union bolt side of brake hose through the hole of damper strut bracket.

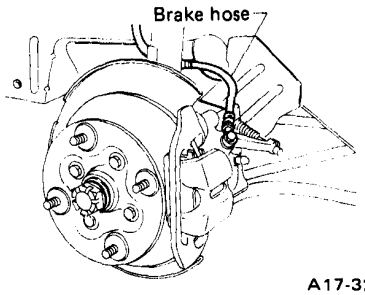

A17-322

Fig. 10-78 Removing front brake hose

2) Installation

Front brake hose

a) Pass the union bolt side of brake hose through the hole of damper strut bracket, and tighten union bolt.

Torque (Union bolt)	15 – 21 N·m (1.5 – 2.1 kg-m, 11 – 15 ft-lb)

b) Fix brake hose with clamp at damper strut bracket.
c) Pass brake hose through the hole of wheel apron bracket, and lightly tighten flare nut to connect brake pipe.
d) Fix brake hose with clamp at wheel apron bracket.
e) While holding hexagonal part of brake hose fitting with a wrench, tighten flare nut to the specified torque.

Torque (Brake pipe flare nut)	13 – 18 N·m (1.3 – 1.8 kg-m, 9 – 13 ft-lb)

f) Bleed air from the brake system.

Rear brake hose

a) Pass brake hose through the hole of bracket, and lightly tighten flare nut to connect brake pipe.
b) Insert clamp upward to fix brake hose.
c) Perform the same procedures as beforementioned in steps e) and f).

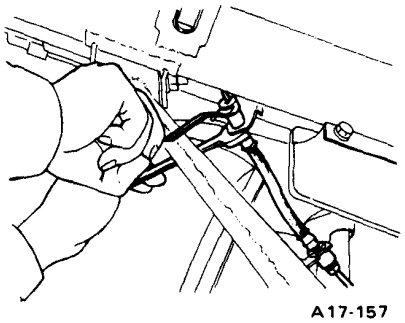

A17-157

Fig. 10-79 Tightening flare nut

3. Brake Pipe Clamp

There are different kinds of clamps according to the installing positions.

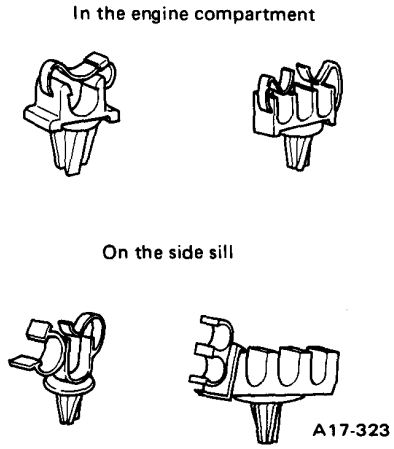

A17-323

Fig. 10-81 Brake pipe clamps

1) Removal

1) Remove brake pipe from clamp.
2) Push clamp claw portion (shown with arrow) by screwdriver tip and take out clamp from hole.

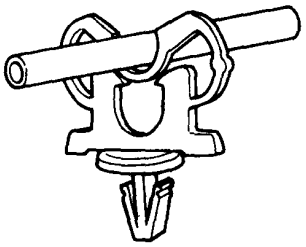

A17-159

Fig. 10-80 Removing clamp

2) Installation

1) Press the clamp claw into body hole until it snaps.
2) Press brake pipe onto clamp.

NOTE:

a. Do not damage the brake pipe by screwdriver etc.
b. When removing and installing the brake pipe, be careful not to bend it. If it is bent a little, correct before installing. If bent excessively, replace with a new one.
c. If the clamp claw is damaged, replace with a new clamp.

Downloaded from www.Manualslib.com manuals search engine

10-9. Troubleshooting

Trouble and possible cause	Corrective action
1. Insufficient braking	
(1) Oil leakage from the hydraulic mechanism	Repair or replace (cup, piston, cylinder, pipe or hose).
(2) Entry of air into the hydraulic mechanism	Bleed the air.
(3) Excessively wide shoe clearance	Adjust the clearance.
(4) Wear, deteriorated surface material, adhering water or oil on the lining	Replace, grind or clean.
(5) Improper operation of master cylinder, wheel cylinder, disc caliper, brake booster or check valve	Correct or replace.
2. Unstable or uneven braking	
(1) Oil on the lining, drum or rotor	Eliminate cause of oil leakage, clean, or replace.
(2) Drum or rotor eccentricity	Correct or replace the drum or rotor.
(3) Worn brake drum, or damage to the drum caused by sand	Correct by grinding, or replace.
(4) Improper lining contact, deteriorated surface material, improper inferior material, or wear	Correct by grinding, or replace.
(5) Deformed back plate	Correct or replace.
(6) Improper tire inflation	Inflate to correct pressure.
(7) Disordered front alignment	Adjust alignment.
(8) Loosened back plate or the support installing bolts	Retighten.
(9) Loosened rear wheel bearing	Retighten to normal tightening torque.
(10) Trouble in the hydraulic system	Replace the cylinder, brake pipe or hose.
(11) Uneven effect of the hand brake	Check, adjust, and replace the front brake and cable system.
3. Excessive pedal stroke	
(1) Entry of air into the hydraulic mechanism	Bleed the air.
(2) Excessive play in the master cylinder push rod	Adjust.
(3) Oil leakage from the hydraulic mechanism	Repair or replace (cup, piston, cylinder, pipe or hose).
(4) Improperly adjusted shoe clearance	Adjust.
(5) Improper lining contact or worn liming	Correct or replace.
4. Brake dragging or improper brake return	
(1) Insufficient pedal play	Adjust play.
(2) Improper master cylinder return	Clean or replace the cylinder.
(3) Clogged hydraulic system	Replace.
(4) Improper return or adjustment of hand brake	Correct or adjust

Downloaded from www.Manualslib.com manuals search engine

Trouble and possible cause	Corrective action
(5) Weakened spring tension or breakage of shoe return spring	Replace the spring.
(6) Excessively narrow clearance between pad and disc rotor	Adjust the clearance by rotating the piston clockwise.
(7) Excessively narrow shoe clearance	Adjust the clearance.
(8) Improper wheel cylinder operation	Correct or replace.
(9) Improperly adjusted rear wheel bearing	Adjust or replace.
5. Brake noise (1) (creak sound)	
(1) Hardened or deteriorated lining	Replace the shoe assembly or pad.
(2) Worn lining	Replace the shoe assembly or pad.
(3) Loosened back plate or the support installing bolts	Retighten.
(4) Loose rear wheel bearing	Retighten to normal tightening torque.
(5) Dirty drum or rotor	Clean the drum or rotor, or clean and replace the brake assembly.
6. Brake noise (2) (hissing sound)	
(1) Worn lining	Replace the shoe assembly or pad.
(2) Improperly installed shoe or pad.	Correct or replace the shoe assembly or pad.
(3) Loose or bent drum or rotor.	Retighten or replace.
7. Brake noise (3) (click sound)	
In the case of the front brake.	
(1) Excessively worn pad or the support	Replace the pad or the support.
In the case of the rear brake.	
(1) Excessively worn shoe ridge	Replace the back plate
(2) Excessively worn wheel cylinder piston	Replace the wheel cylinder assembly
(3) Lack of oil on the shoe ridge surface and anchor	Add more grease

Downloaded from www.Manualslib.com manuals search engine

10-10. Hill-Holder

1. Construction and Operation

1) Outline

Hill-holder is a device to make starting on an uphill road easy and permits even a driver not yet familiarized with starting by use of parking brake to start the vehicle smoothly.

When pressing down the clutch pedal with the brake pedal depressed in order to start the vehicle on an uphill road, this device holds the brake temporarily upon taking your foot off the brake pedal (until the clutch pedal is released). Therefore, smooth starting is enabled by usual engagement of the clutch while depressing the accelerator pedal.

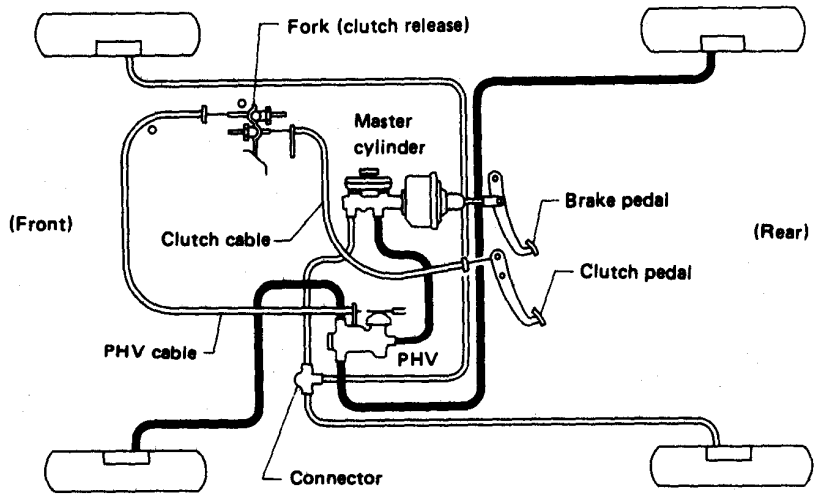

A17-262

Fig. 10-82 Outline of hill-holder

2) Pressure Hold Valve (PHV)

PHV (Pressure Hold Valve) is connected to one of the service brake pipes and pushrod (8) is pushed in and/or pulled out by cam shaft (2) interlinked with the clutch pedal to change the clearance between ball (3) and seal (5), thereby opening and/or closing the hydraulic circuit. Normally, on a flat road, ball (3) is located at the front and the valve is kept opened regardless of the position of the pushrod. (This status is the same as on a downhill road.)

When stopping the vehicle on an uphill road by depressing both brake and clutch pedals, the ball rolls toward the rear and, at the same time, the pushrod retracts to close the valve, so that hydraulic pressure is maintained. Even when taking your foot off the brake pedal, the hydraulic pressure is maintained so far as the clutch pedal is kept depressed. In this status, when engaging the clutch ordinarily while depressing the accelerator pedal, the maintained hydraulic pressure is released simultaneously with the generation of driving force to permit smooth starting.

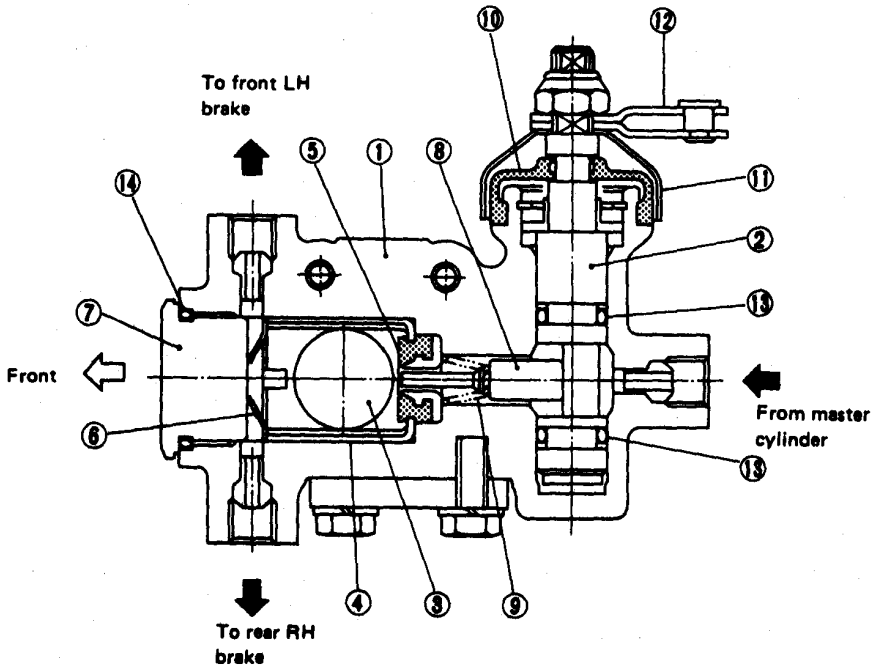

1	Body	8	Push rod
2	Camshaft	9	Spring
3	Ball	10	Boot
4	Ball guide	11	Collar
5	Seal	12	Lever
6	Plate spring	13	O-ring
7	Cap	14	O-ring

A17-263

Fig. 10-83 Pressure hold valve

Downloaded from www.Manualslib.com manuals search engine

- Activating condition

This device is activated only when depressing the clutch and brake pedals with the vehicle stopped on an uphill road.

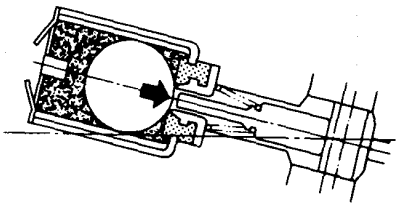

A17-264

Fig. 10-84

When stopping the vehicle on an uphill road, the ball rolls toward the rear to seal the port and therefore the hydraulic pressure is maintained even by releasing the brake pedal.

- Inactive status

This accessory is not activated in any status other than the above.

1. While driving

a. During acceleration or usual driving

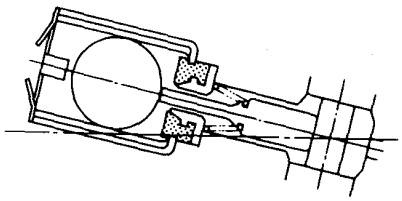

A17-265

Fig. 10-85

Since the clutch pedal is not depressed, the pushrod is located outside the port. In this status, hydraulic pressure cannot be maintained.

b. During deceleration

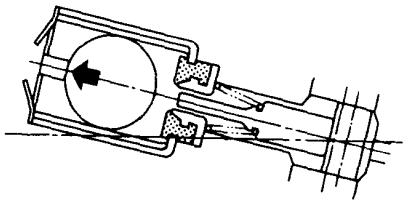

A17-266

Fig. 10-86

Even when depressing the clutch pedal, the ball is kept at the front by decelerating force. In this status, hydraulic pressure is not maintained.

2. When stopping

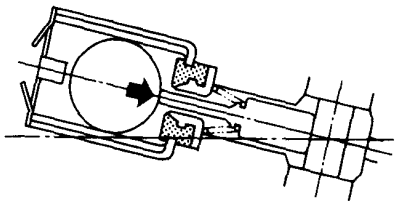

A17-267

Fig. 10-87

Even when stopping on an uphill road, hydraulic pressure is not maintained unless the clutch pedal is depressed.

3. On a flat road

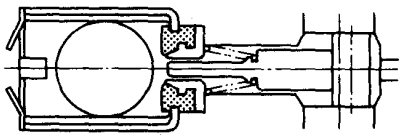

A17-215

Fig. 10-88

This device is not designed to operate on a flat road, except for reversing.

3) Operational Precautions

1. Hill-holder is a device used to facilitate starting on an uphill road. For stoppage on the uphill road, therefore, you must keep the brake pedal depressed or pull the parking brake.
2. Hill-holder may not be activated on a slope of an extremely small inclination.
3. If the brake is not held sufficiently upon releasing the brake pedal with the clutch pedal depressed, press down the brake pedal a little strongly once again.
4. If depressing the clutch pedal again in the course of starting operation, the brake may be released. In this case, depress the brake pedal again. (Because the brake is released when returning the clutch pedal halfway) (For example, when interrupting starting operation or shifting gear from other than LOW because of misoperation)
5. Before you leave the driver's seat, be sure to pull the parking lever and confirm that the vehicle is kept stopped upon releasing the clutch pedal.
6. When reversing the vehicle on a flat road, the following phenomena may be felt. These phenomena are caused by the activation of the hill holder, which does not constitute abnormality.
   a. Brake effect remains even after releasing the brake pedal if depressing the clutch and brake pedals when reversing the vehicle.
   b. A slight shock is given to the vehicle when starting the vehicle after stopping the reverse movement.

Downloaded from www.Manualslib.com manuals search engine

2. Component Parts

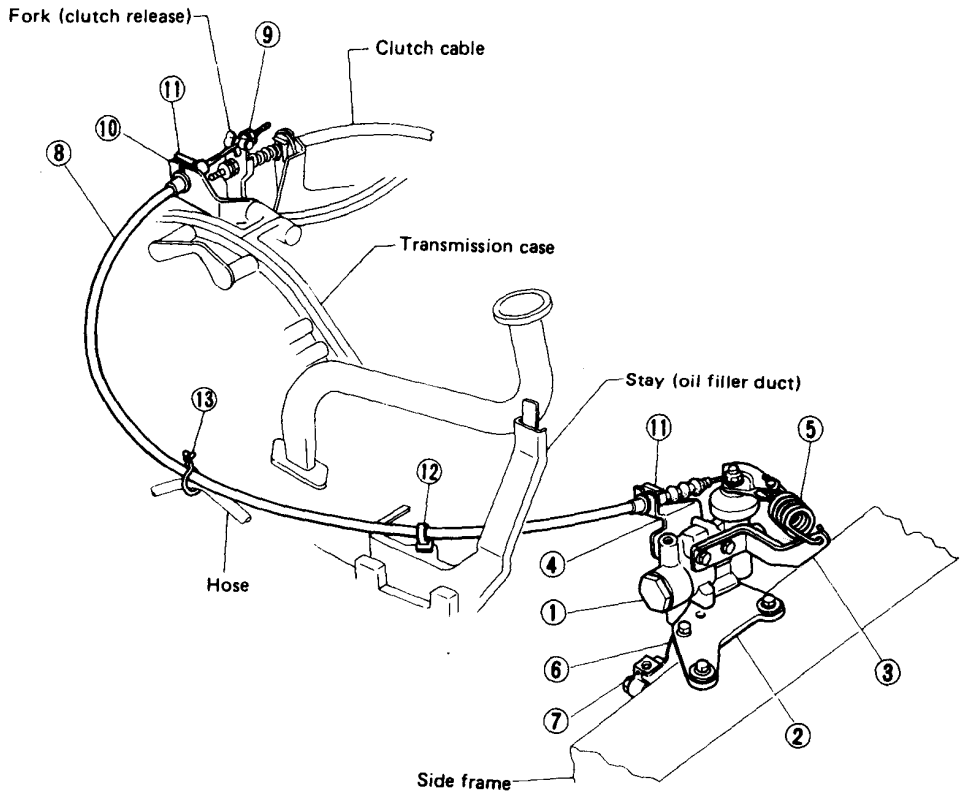

1 PHV (Pressure hold valve)
2 Support
3 Hook (spring)
4 Stay (PHV)
5 Return spring
6 Bracket
7 Connector
8 PHV cable
9 Adjusting nut
10 Bracket (cable)
11 Clamp
12 Clip
13 Clip

A17-268

Fig. 10-89 Component parts of hill-holder

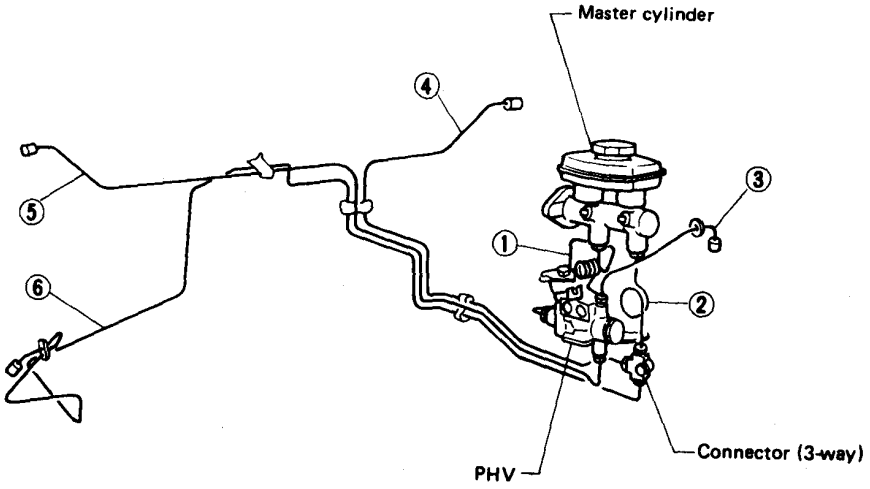

1	Brake pipe (primary)	: Master cylinder (primary) ~ PHV
2	Brake pipe (secondary)	: Master cylinder (secondary) ~ Connector
3	Brake pipe (Front LH)	: PHV ~ Front LH
4	Brake pipe (Center front LH)	: Connector ~ Rear LH
5	Brake pipe (Center front RH)	: PHV ~ Rear RH
6	Brake pipe (Front RH)	: Connector ~ Front RH

A17-269

Fig. 10-90 Piping of hill-holder

Downloaded from www.Manualslib.com manuals search engine

3. Removal

1) Drain brake fluid from reservoir on primary side of master cylinder.
2) Remove adjusting nut and cable clamp, and disconnect PHV cable from cable bracket on engine.
3) Detach PHV cable from clips.
4) Remove cable clamp, and disconnect PHV cable from PHV stay.

NOTE:
Carefully protect boots and inner cable from damage when disconnecting PHV cable.

5) Separate connector bracket from support of PHV.
6) Disconnect brake pipes from PHV.

NOTE:
a. Pay attention not to drop brake fluid onto body painting since it may dissolve paint.
b. Pay attention not to damage hexagonal head of flare nut by using pipe wrench without fail.

7) Detach PHV along with support from side frame.

NOTE:
Exercise utmost care to prevent foreign matter from entering into PHV when removing it.

4. Inspection

Check up removed parts as follows, and replace defective ones.
1) Check if boots of PHV cable are damaged or degraded, and if inner cable is damaged or corroded.
2) Check if return spring is worn out, damaged or corroded.
3) Confirm that rolling sound of ball is heard with PHV inclined and lever rotates smoothly.

CAUTION:
Never disassemble PHV. Replace entire PHV ASSY if necessary.

5. Installation

1) Assemble bracket with support of PHV.

Torque	7 – 13 N·m (0.7 – 1.3 kg-m, 5.1 – 9.4 ft-lb)

2) Install PHV onto side frame.

Torque	7 – 13 N·m (0.7 – 1.3 kg-m, 5.1 – 9.4 ft-lb)

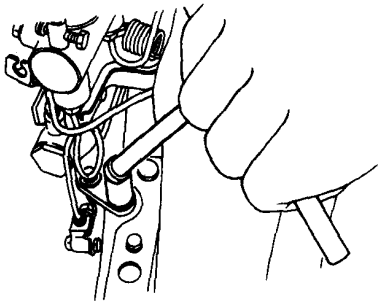

A17-270

Fig. 10-91

3) Connect brake pipes to PHV.

Torque	13 – 18 N·m (1.3 – 1.8 kg-m, 9 – 13 ft-lb)

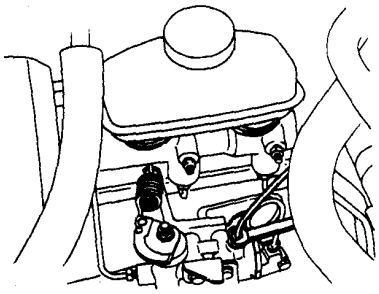

A16-271

Fig. 10-92

NOTE:
Confirm that brake pipes are not deformed and/or damaged. Replace them with new ones if necessary.

4) Install PHV cable to PHV stay.

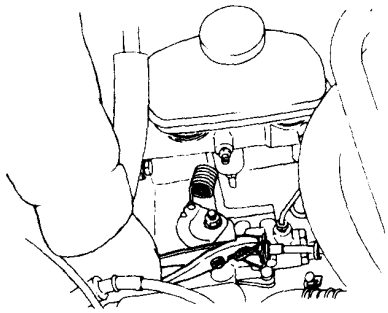

A16-272

Fig. 10-93

NOTE:
If cable clamp (and clips) is damaged, replace it with a new one.

5) Connect PHV cable with clips.

NOTE:
Avoid sharp bending of PHV cable as it may cause breakage.

6) Install PHV cable onto cable bracket on engine.

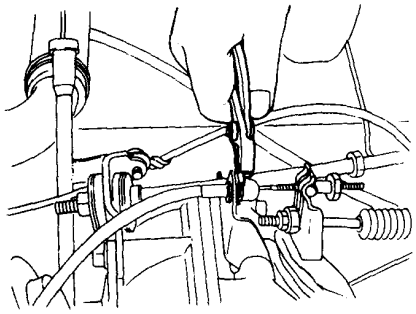

Fig. 10-94 A16-273

7) Apply grease to the following points.
- Hook portion of return spring
- Cable end portion of lever
- Cable end portion of clutch release fork

Grease used
Idemitsu Auto Lex A

8) Be sure to bleed air from the system.

NOTE:
After replacing PHV cable or clutch cable with new one, operate clutch pedal about 30 times as a running-in operation prior to adjustment.

Downloaded from www.Manualslib.com manuals search engine

6. Adjustments

1) Inspect free play of clutch pedal by depressing the pedal by hand. If it is out of the specified value, adjust it by turning adjusting nut on engine side end of clutch cable at release fork.

Standard of free play	
At clutch pedal	13 – 20 mm (0.51 – 0.79 in)
At center of cable on clutch release fork	2 – 3 mm (0.08 – 0.12 in)

Torque	
Adjusting nut of clutch cable	5.4 – 9.3 N·m (0.55 – 0.95 kg-m, 4.0 – 6.9 ft-lb)
Adjusting nut of PHV cable	2.5 – 4.4 N·m (0.25 – 0.45 kg-m, 1.8 – 3.3 ft-lb)

2) Confirm stopping and starting performances by activating hill-holder on an uphill road of 3° or higher inclination.

a. If vehicle does not stop;
   Tighten adjust nut of PHV cable.

b. If vehicle does not start properly;
   - Case A – When hill-holder is released later than engagement of clutch pedal (Engine tends to stall.):
     Loosen adjust nut gradually until smooth starting is enabled.
   - Case B – When hill-holder is released earlier than engagement of clutch pedal (Vehicle slips down slightly.):
     Tighten adjust nut so that hill-holder is released later than engagement of clutch pedal (status in Case A). Then make adjustment the same as in Case A.

CAUTION:
Whenever turning adjust nut, prevent PHV cable from revolving as shown in following figure.

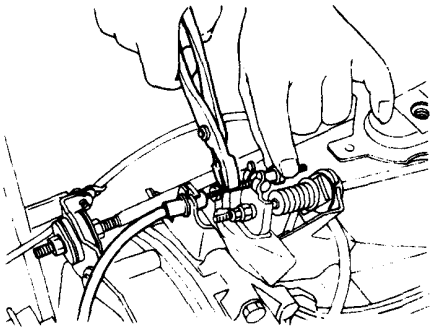

Fig. 10-95 Turning adjust nut for PHV cable

7. Troubleshooting

Trouble and possible cause	Corrective action
1. Counterforce of clutch pedal is too strong	
(1) PHV cable is damaged or does not operate properly	Repair or replace
(2) Lever of PHV is defective	Replace entire PHV ASSY
(3) Clutch system is anomalous	Refer to "Clutch and pedal cable system"
2. Machine does not stop on uphill road of 3° or higher inclination	
(1) Front side of machine is lowered	Refer to "Suspension"
(2) PHV cable is broken	Replace
(3) Play of clutch is excessive	Adjust
(4) PHV cable is elongated	Adjust
(5) Sealing of PHV is poor	Replace entire PHV ASSY
3. Shock is felt when starting	
(1) Poor adjustment of starting performance	Adjust
(2) When depressing the brake pedal strongly:	(The stronger brake pedal depressing force, the later hill holder releasing)
(3) When starting on flat road after stopping reverse movement:	(Because hill holder is activated)

Downloaded from www.Manualslib.com manuals search engine

Trouble and possible cause	Corrective action
4. Machine slips down when starting	
(1) PHV cable is elongated	Adjust
(2) Clutch facing is worn out	Adjust or replace
(3) Bracket (cable) or stay (PHV) is deformed	Repair or replace
5. Machine cannot start after stoppage	
(1) Return spring is fatigued or broken	Replace
(2) PHV lever won't return	Replace entire PHV ASSY
(3) When intentionally depressing brake pedal strongly:	[When the brake pedal is depressed by a force of 1,177 N (120 kg, 265 lb) or more]
6. Abnormal sound is generated upon releasing brake pedal when stopping	
Rotor and pad, drum and lining matched with each other due to inadequate depressing force to brake pedal	(Abnormal sound is not generated when depressing brake pedal a little stronger)
7. Abnormal sound is generated when operating clutch pedal	
(1) Grease is inadequate for the hook of return spring and sliding portion of PHV cable end	Apply grease
(2) When releasing after maintaining high fluid pressure:	(Flowing sound of fluid when releasing high fluid pressure)
(3) Clutch system is anomalous	Refer to "Clutch and pedal cable system"

CAUTION:

a. Description in parentheses is a characteristic of hill-holder and does not indicate abnormality.
Depressing force required for clutch pedal equipped to hill-holder specifications is 20 to 29 N (2 to 3 kg, 4 to 7 lb) larger than the conventional specifications, which does not constitute abnormality.

b. When vehicle cannot travel (brake cannot be released) because return spring is broken, remove adjust nut, disconnect clutch and PHV, and then return PHV lever to release the brake.

c. The hill-holder may not be activated on a slope of an extremely small inclination. If you want to correct it, insert a shim in between the side frame and support, thereby raising the front of PHV.
When inserting a shim, be sure to confirm stopping status on a slope whenever inserting a single shim. It is recommendable to avoid raising front of PHV excessively. Never insert 2 or more shims at a time.

Part Number	Part Name
725807000	Shim

[Thickness of shim is 0.6 mm (0.024 in), and one shim increases an angle of 0.5°.]

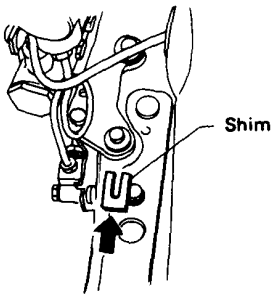

A17-274

Fig. 10-96 Inserting shim

Downloaded from www.Manualslib.com manuals search engine

10-11. Special Tools

925450000	925460000	925471000	925590000
ADAPTER, WHEEL CYLINDER 5/8"	ADAPTER, WHEEL CYLINDER 11/16"	PULLER, DISC BRAKE CYLINDER	WRENCH, BRAKE PISTON
Installing cap	Installing cap	Pressing cone spring	Rotating brake piston
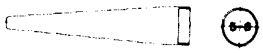 *Fig. 10-97* A17-161	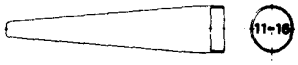 *Fig. 10-98* A17-163	*Fig. 10-99* ST-148	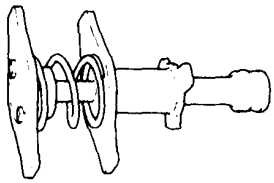 *Fig. 10-100* A17-162
925600000			
ADAPTER, O-RING			
Installing spindle O-ring			
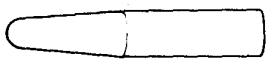 *Fig. 10-101* A17-160			

Downloaded from www.Manualslib.com manuals search engine

Downloaded from www.Manualslib.com manuals search engine

CHAPTER 11

STEERING SYSTEM

		Page
11– 1.	SPECIFICATIONS AND SERVICE DATA	11– 2
11– 2.	COMPONENT PARTS	11– 5
11– 3.	OPERATING PRINCIPLE (Power Steering System)	11– 7
11– 4.	STEERING SHAFT	11– 8
11– 5.	TILT STEERING WHEEL	11–11
11– 6.	STEERING GEARBOX (Manual Steering System)	11–18
11– 7.	STEERING GEARBOX (Power Steering System)	11–27
11– 8.	OIL PUMP (Power Steering System)	11–37
11– 9.	BELT LINE (Power Steering System)	11–42
11–10.	FLUID LINE (Power Steering System)	11–46
11–11.	TROUBLESHOOTING	11–50
11–12.	SPECIAL TOOLS	11–63

SUBARU

Downloaded from www.Manualslib.com manuals search engine

11-1. Specifications and Service Data

1. Specifications

Whole System	Minimum turning radius		4.7 m (15.4 ft) (Hatchback) 4.8 m (15.7 ft) (Except Hatchback)
	Steering angle	Inside	36.5°
		Outside	35°
	Steering wheel diameter		(STD and DL models) 2-spoke type 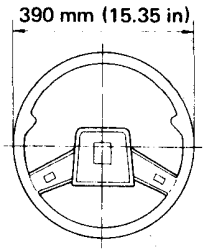 *Fig. 11-1* (GL model) 2-spoke soft type 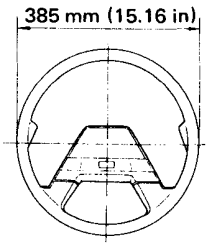 *Fig. 11-2*
	Overall gear ratio		18.7
	Turns, lock to lock		3.8
	Toe-in (in empty)	Non-4WD	1 ± 1 mm (0.04 ± 0.04 in)
		4WD	OUT 5 ± 1 mm (0.20 ± 0.04 in)
Gearbox	Type	Manual steering	Rack and pinion
		Power steering	Rack and pinion, Integral
	Gear ratio		∞
	Backlash		0 (Automatically adjustable)
	Valve (Power steering system)		Rotary valve
Pump (Power steering system)	Type		Vane pump
	Reservoir		Integrated to pump
	Output		10 cm^3 (10 cc, 0.61 cu in)/rev.
	Relief pressure		5,394 kPa (55 kg/cm^2, 782 psi)
	Hydraulic flux control		Drooping in response to engine revolution
	Hydraulic flux	700 rpm	7 Litter (7.4 US qt, 6.2 Imp qt)/min.
		3,000 rpm	3 Litter (3.2 US qt, 2.6 Imp qt)/min.
	Range of revolution		600 – 7,000 rpm
	Revoluting direction		Clockwise
Working Fluid (Power steering system)	Name		ATF DEXRON
	Capacity	Reservoir	0.45 Litter (0.5 US qt, 0.4 Imp qt)
		Total	0.8 Litter (0.8 US qt, 0.7 Imp qt)

Downloaded from www.Manualslib.com manuals search engine

2. Service Data

ITEM			STANDARD	SERVICE LIMIT
Steering wheel	Free play		0 to 25 mm (0 to 0.98 in)	
Turning angle	Inner tire & wheel		35°30′ to 37°30′	
	Outer tire & wheel		34° to 36°	
Steering shaft	Overall length		857.9 ± 1.0 mm (33.78 ± 0.039 in)	
	Outer diameter of elliptical portion when rotating		Less than 32.6 mm (1.283 in)	
	Run-out	Collar portion	Less than 0.6 mm (0.024 in)	
		Shaft end portion	Less than 1.2 mm (0.047 in)	
	Clearance between steering wheel and column cover		1 to 3 mm (0.04 to 0.12 in)	
Universal joint	Looseness		Zero mm (in)	
	Maximum yawing torque		0.6 N·m (0.06 kg-m, 0.4 ft-lb)	
	Folding torque (only for power steering system)		5.49 N (0.56 kg, 1.23 lb) or less	
Steering gearbox (Manual steering system)	Rack shaft	Bend limit	0.1 mm (0.004 in)	
	Pinion	Free play limit	0.3 mm (0.012 in)	
		Rotating torque	Within 30 mm (1.18 in) from rack center at straight-ahead position: Less than 1.1 N·m (0.11 kg-m, 0.8 ft-lb) Maximum allowable value within 175 mm (6.89 in) from rack center at straight-ahead position: 1.5 N·m (0.15 kg-m, 1.1 ft-lb)	
Steering gearbox (Power steering system)	Sliding resistance		245 N (25 kg, 55 lb) or less	
	Rack shaft play in radial direction			
		Right-turn steering	0.15 mm (0.0059 in) or less	
		Left-turn steering	Horizontal movement: 0.3 mm (0.012 in) or less Vertical movement: 0.15 mm (0.0059 in) or less	
	Input shaft play	In radial direction	0.15 mm (0.0059 in) or less	
		In axial direction	0.1 mm (0.004 in) or less	
	Turning resistance		Within 30 mm (1.18 in) from rack center at straight-ahead position: Less than 6.18 N (0.63 kg, 1.39 lb) Maximum allowable value within 175 mm (6.89 in) from rack center at straight-ahead position: 8.43 N (0.86 kg, 1.90 lb)	
Oil pump (Power steering system)	Pulley shaft	Radial play	0.2 mm (0.008 in) or less	
		Axial play	0.3 mm (0.012 in) or less	
	Pulley	Ditch deflection	1.0 mm (0.039 in) or less	
		Resistance to rotation	9.22 N (0.94 kg, 2.07 lb) or less	
	Fluid capacity		0.8 Liter (0.8 US qt, 0.7 Imp qt)	
	Regular pressure		981 kPa (10 kg/cm^2, 142 psi) or less	
	Relief pressure and working pressure		4,609 to 5,884 kPa (47 to 60 kg/cm^2, 668 to 853 psi)	

Downloaded from www.Manualslib.com manuals search engine

ITEM			STANDARD	SERVICE LIMIT
Belt line (Power steering system)	Belt tension		15 to 20 mm (0.59 to 0.79 in)/ 98 N (10 kg, 22 lb)	
	Idler pulley	Ditch deflection	1.0 mm (0.039 in) or less	
	Dust seal	Outer diameter	47.6 to 48.3 mm (1.874 to 1.902 in)	
		Outer diameter (Bearing side)	47.6 to 48.5 mm (1.874 to 1.909 in)	
		Inner diameter	19.3 to 19.8 mm (0.760 to 0.780 in)	
Steering wheel efforts (Power steering system)	In standstill with engine idling on concrete road		24.5 N (2.5 kg, 5.5 lb) or less	
	In standstill with engine stalled on concrete road		93.2 N (9.5 kg, 20.9 lb) or less	

- **Recommended Power Steering Fluid**

B.P.	B.P. Autran DX
CALTEX	Texamatic Fluid 6673 Dexron
CASTROL	CASTROL TQ Dexron
MOBIL	Mobil ATF220
SHELL	Shell ATF Dexron
TEXACO	Texamatic Fluid 6673 Dexron

Downloaded from www.Manualslib.com manuals search engine

11-2. Component Parts

1. Manual Steering System

Tightening torque N·m (kg-m, ft-lb)
T1: 20 - 31 (2.0 - 3.2, 14 - 23)
T2: 14 - 20 (1.4 - 2.0, 10 - 14)
T3: 22 - 25 (2.2 - 2.6, 16 - 19)
T4: 25 - 29 (2.5 - 3.0, 18 - 22)
T5: 78 - 88 (8 - 9, 58 - 65)
T6: 44 - 54 (4.5 - 5.5, 33 - 40)

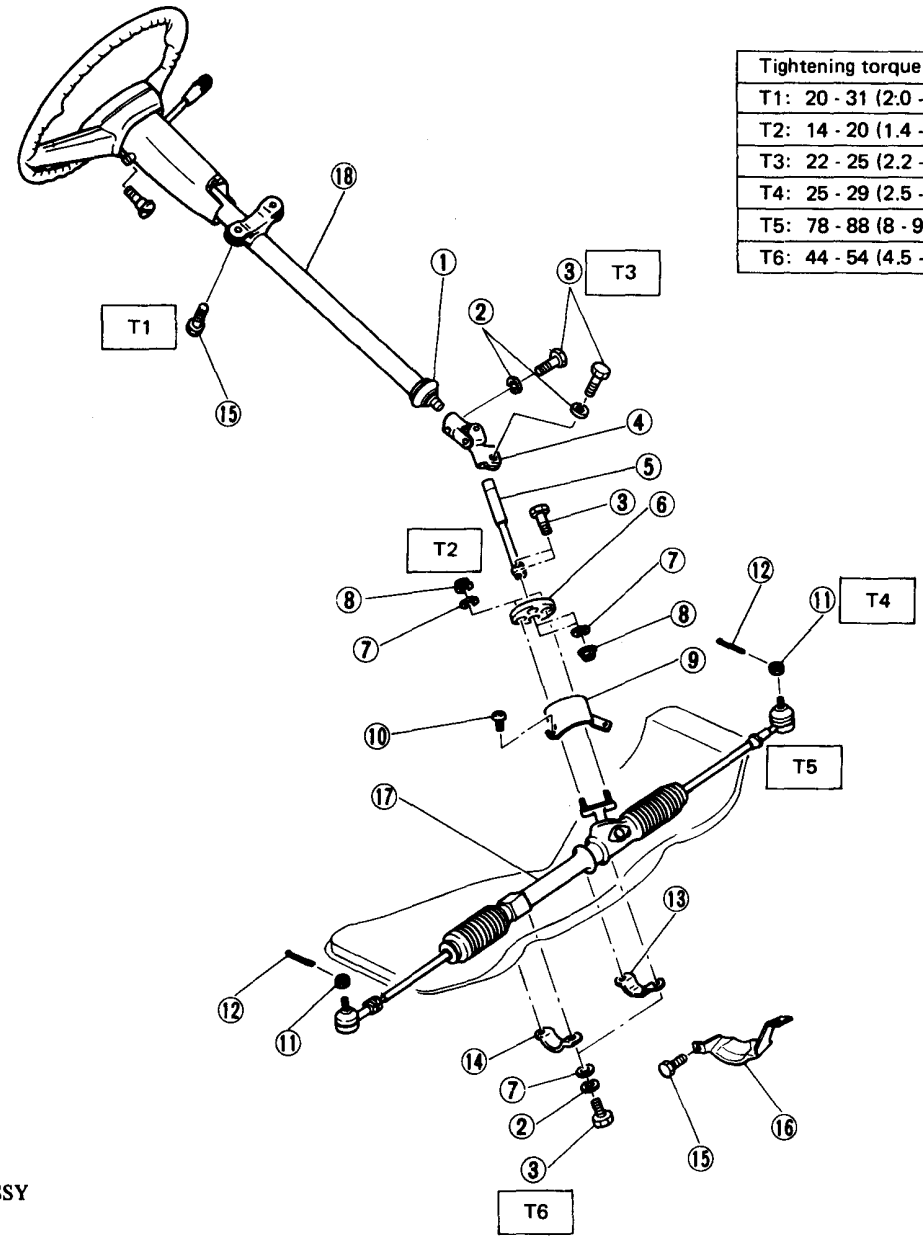

1 Bushing
2 Spring washer
3 Bolt
4 Universal joint
5 Torque rod
6 Rubber coupling
7 Washer
8 Self-locking nut
9 Coupling cover
10 Tapping screw
11 Castle nut
12 Cotter pin
13 Clamp B
14 Clamp A
15 Flange bolt
16 Protector
17 Steering gearbox
18 Steering shaft ASSY

Fig. 11-3 Component parts of manual steering system

Downloaded from www.Manualslib.com manuals search engine

2. Power Steering System

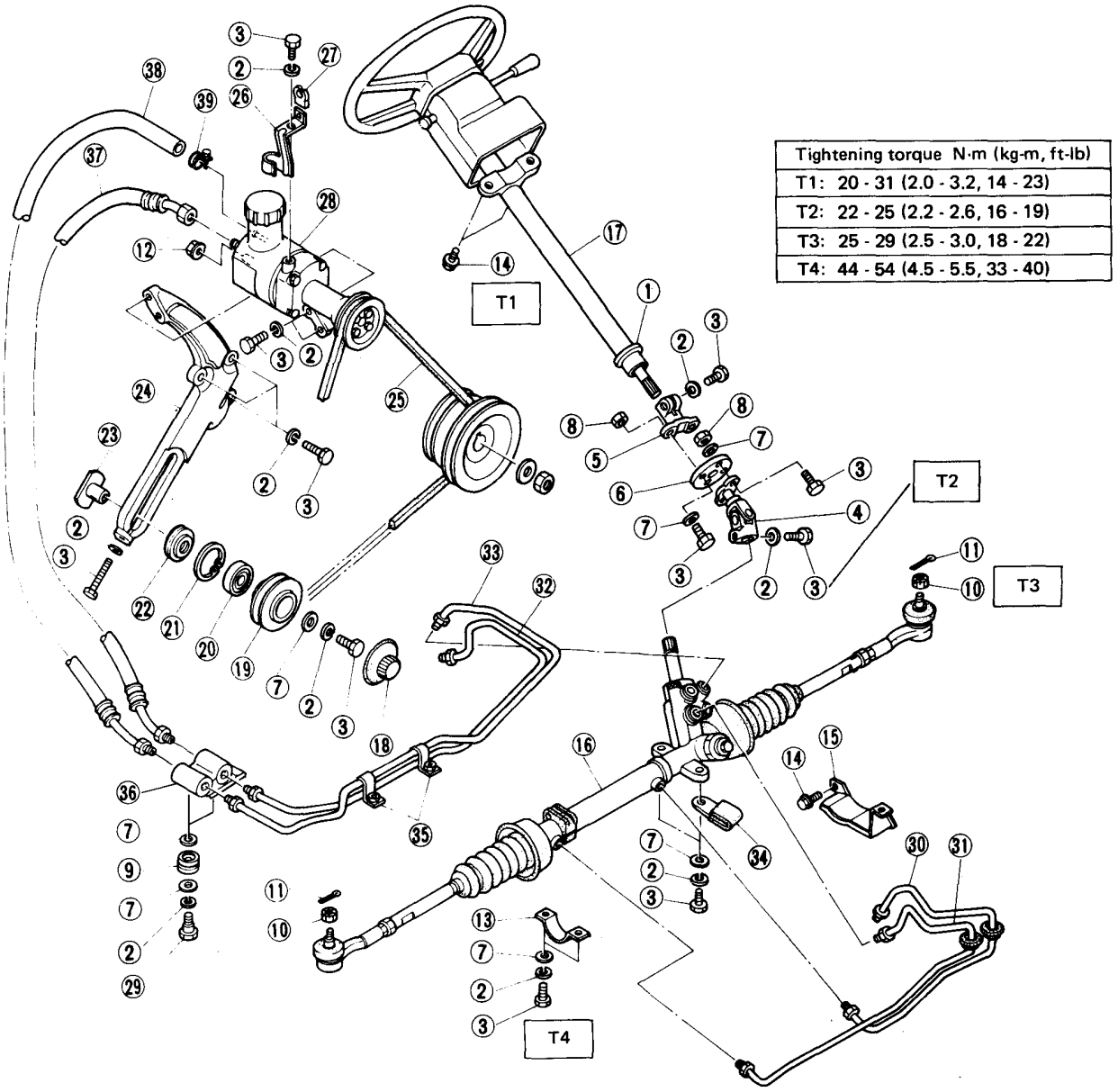

Tightening torque N·m (kg-m, ft-lb)
T1: 20 - 31 (2.0 - 3.2, 14 - 23)
T2: 22 - 25 (2.2 - 2.6, 16 - 19)
T3: 25 - 29 (2.5 - 3.0, 18 - 22)
T4: 44 - 54 (4.5 - 5.5, 33 - 40)

1 Bushing
2 Spring washer
3 Bolt
4 Universal joint
5 Joint
6 Rubber coupling
7 Washer
8 Self-locking nut
9 Grommet
10 Castle nut
11 Cotter pin
12 Flange nut
13 Clamp
14 Flange bolt
15 Protector
16 Steering gearbox ASSY
17 Steering shaft ASSY
18 Cap
19 Idler pulley
20 Ball bearing
21 Snap ring
22 Dust seal
23 Shaft
24 Bracket
25 V belt
26 Clip
27 Supporter
28 Oil pump ASSY
29 Connector bolt
30 Pipe B
31 Pipe A
32 Pipe C
33 Pipe D
34 Clamp A
35 Clamp B
36 Connector
37 Pressure hose
38 Return hose
39 Hose clip

A18-339

Fig. 11-4 Component parts of power steering system

Downloaded from www.Manualslib.com manuals search engine

11-3. Operating Principle (Power Steering System)

1) The engine drives vane pump (1) through belt to deliver working fluid.
2) The delivered working fluid is controlled to appropriate volume according to engine speed by flow control valve (2) in the hydraulic pump ASSY, and is fed to control valve (4) through pressure hose (3).
3) When turning the steering wheel, the above-mentioned control valve (4) coupled to the pinion shaft works to form working fluid line according to the steering direction. That is, working fluid passes through pipe (5) or (6) and enters working chamber A or B of power cylinder (7).
4) The working fluid entering either of the working chambers acts on rack piston (8) and generates rightward or leftward force on rack shaft (9), thereby assisting and reducing the steering effort.
5) When rack piston (8) is shifted, working fluid in the other working chamber is forced out and returned to oil reservoir (11) via pipe (5) or (6), control valve (4) and return hose (10).

1 Vane pump
2 Flow control valve
3 Pressure hose
4 Control valve
5 Pipe A
6 Pipe B
7 Hydraulic cylinder
8 Rack piston
9 Rack axle
10 Return hose
11 Oil reservoir
12 Relief valve
13 Connector
14 Pipe C
15 Pipe D

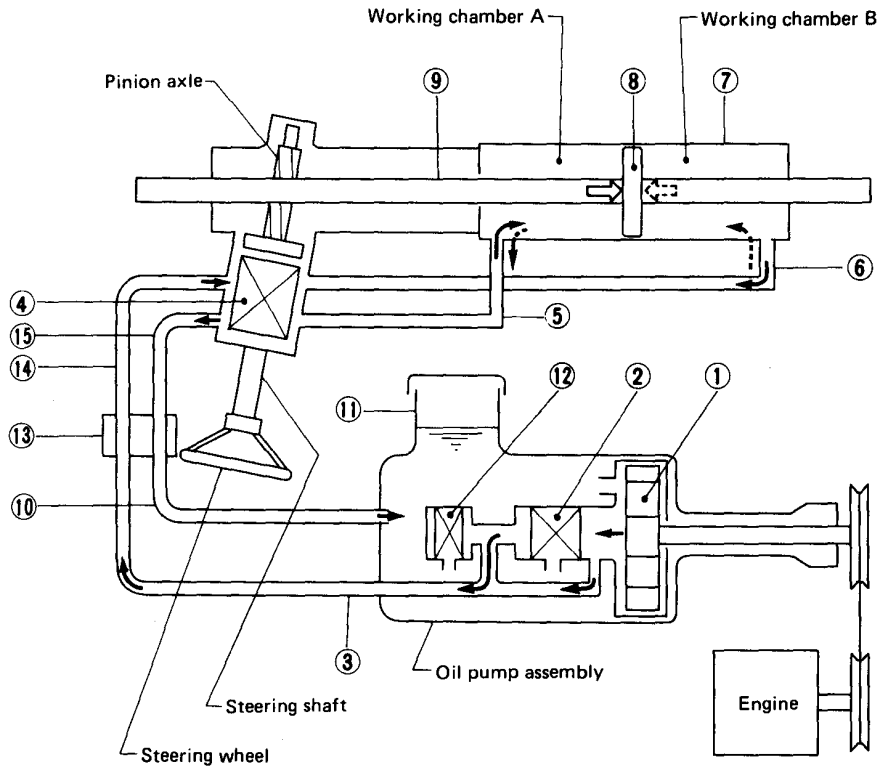

Fig. 11-5

NOTE:

a. If a trouble occurs on the hydraulic system, the steering shaft is mechanically coupled with the pinion shaft via control valve (4) and operates the rack and pinion the same as in the manual steering system.

b. Relief valve (12) incorporated in the hydraulic pump ASSY limits the maximum hydraulic pressure and relieves pressure if an excessive pressure works on the valve.

Downloaded from www.Manualslib.com manuals search engine

11-4. Steering Shaft

1. Construction

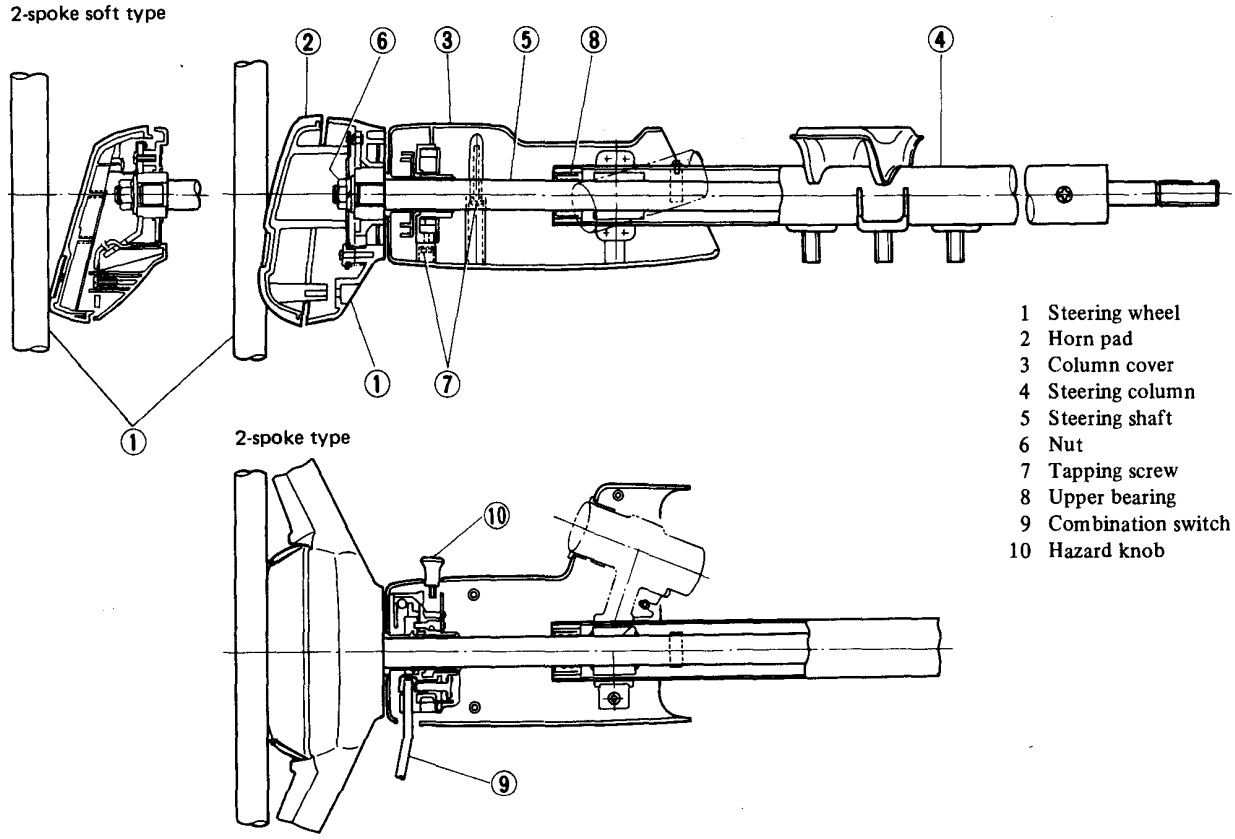

1 Steering wheel
2 Horn pad
3 Column cover
4 Steering column
5 Steering shaft
6 Nut
7 Tapping screw
8 Upper bearing
9 Combination switch
10 Hazard knob

Fig. 11-6 Construction of steering shaft A18-341

2. Removal

1) Open the front hood and disconnect the minus terminal of the battery.
2) Separate steering shaft and gear box by removing universal joint connecting bolt at steering shaft side.
3) Remove trim panel of driver's side.
4) Remove ECM from steering column.
5) Disconnect connector for ignition-starter switch and combination switch wiring harness under instrument panel.
6) Remove the steering shaft installing bolts under instrument panel.
7) Pull out the steering shaft assembly from the hole on the toe board.

3. Disassembly

1) Removing horn pad

In 2-spoke type steering wheel, remove a screw at center of back side of steering wheel and slide horn pad downward while pressing it.

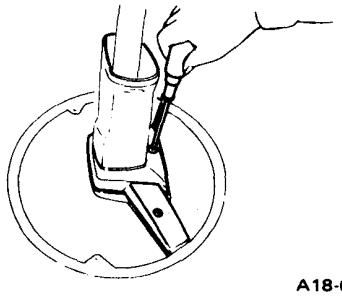

A18-084

Removing horn pad (2-spoke type steering wheel)

In 2-spoke soft type steering wheel;

a. Pull up lower areas a & b of pad to unclip bosses from lower cover.
b. While lifting up lower ends of pad with taking care of bosses not to interfere with horn plate spring, slide pad upwards.

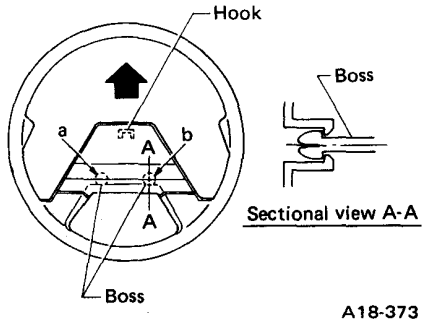

A18-373

Fig. 11-7 Removing horn pad (2-spoke soft type steering wheel)

Downloaded from www.Manualslib.com manuals search engine

2) Remove the steering wheel installing nut and pull out the steering wheel from the steering shaft.

3) Remove five screws fitting lower column cover to upper column cover, and two combination switch installing screws. Then remove upper and lower column covers, and combination switch.

4) Remove horn brush by loosening a screw.

5) Remove the lower bearing installing screws and pull out the steering shaft with the bearing downward.

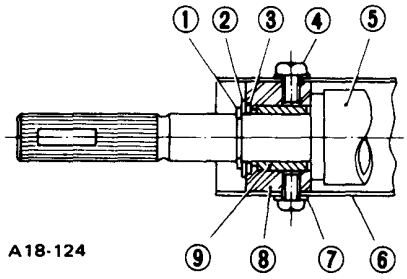

1 Snap ring
2 Washer
3 O-ring
4 Screw
5 Shaft
6 Steering column
7 Lock washer
8 Housing
9 Bearing

Fig. 11-8 Cross section of steering shaft

6) Remove snap ring and then remove washer, O-ring and bearing with housing from steering shaft.

NOTE:
If it is necessary to replace upper column bearing, apply a wooden piece [outer diameter: 25 to 28 mm (0.98 to 1.10 in)] to the bearing and tap it with a hammer. Then, fit a new upper column bearing so as to correspond end surfaces of column and bearing by the same manner of removal.

4. Inspection

1) Universal Joint

1) Check looseness along the axis and the rotation.

Looseness	Zero mm (in)

2) Check yawing torque

Maximum yawing torque	0.6 N·m (0.06 kg-m, 0.4 ft-lb)

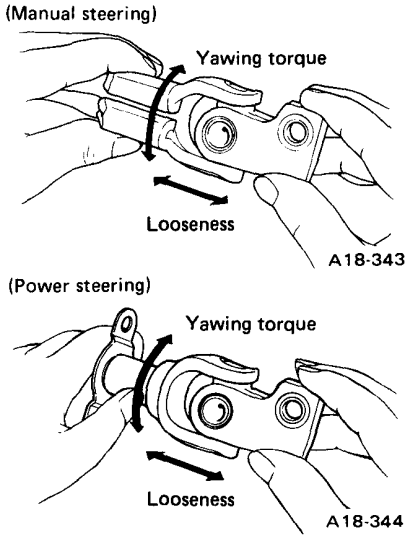

Fig. 11-9 Inspection of universal joint

3) Check the seal ring for damage or the serration for wear.

Replace it with a new one, if it is defective.

2) Steering Shaft Assembly

1) Check the steering shaft for its length and straightness.

Standard steering shaft length	857.9±1.0 mm (33.78±0.039 in)

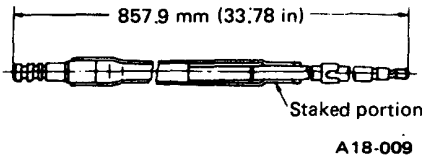

Fig. 11-10 Steering shaft length

Straightness	
① Elliptical portion (outer dia. when rotated)	Less than 32.6 mm (1.283 in)
② Collar portion (runout)	Less than 0.6 mm (0.024 in)
③ Shaft end portion (runout)	Less than 1.2 mm (0.047 in)

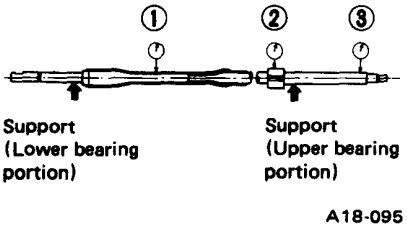

Fig. 11-11 Measuring steering shaft runout

2) Check the press calked part for looseness.

3) Check the shaft for damage.

3) Steering Column Bearing (Upper and lower)

Check for wear and damage. If any trouble is found, replace it with a new one.

4) Snap ring

Check and replace if deformed.

5) Steering Shaft and Lower Bearing

Check for looseness between them along the shaft and vertically toward the shaft. Replace the bearing and/or O-ring if any trouble is found.

5. Assembly

1) Apply grease on the sliding portion of steering shaft (at lower bearing, upper bearing and horn brush).

Install the bearing, O-ring, washer and snap ring to the steering shaft.

NOTE:
Be careful not to deform the snap ring.

2) Insert the steering shaft into the steering column from the lower side.

Tighten the lower bearing installing screws.

NOTE:
a. Align the cut of bearing housing and electro-united portion of steering column pipe when inserting steering shaft.
b. Check that lower bearing is installed with no free play in all directions.

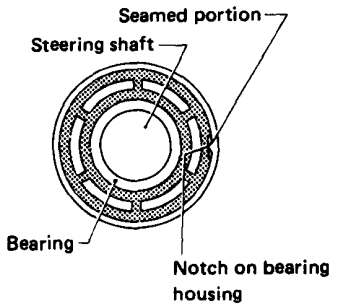

Fig. 11-12

Downloaded from www.Manualslib.com manuals search engine

3) Install the horn brush.

NOTE:
a. Check brush for deformation.
b. Install brush without fail because it is ground connection for horn circuit.

4) Install the combination switch and column covers (upper & lower) to the steering column.
5) Install the steering wheel to the steering shaft.

Torque (Steering wheel)	29 – 39 N·m (3.0 – 4.0 kg-m, 22 – 29 ft-lb)

6) Check clearance between the steering wheel and the column cover.

Clearance	1 – 3 mm (0.04 – 0.12 in)

If the clearance is not in the specified range, loosen column cover installing screws and adjust column cover.

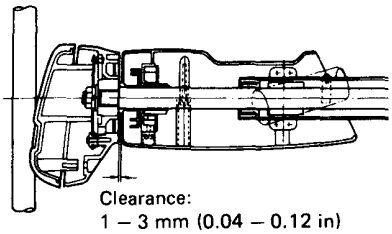

Fig. 11-13 Checking clearance

7) In 2-spoke type steering wheel, install horn pad to steering wheel and tighten screw securely from the back side of steering wheel.
In 2-spoke soft type steering wheel;
a. Align fin part of pad with lower cover front end, then depressing (→1) slightly, pull (→2) pad so that hook meets with insert.
b. Aligning pad and lower cover laterally, depress boss parts (a & b in Fig. 11-7) of pad so as to clip into lower cover.

NOTE:
After installation of pad, check horn by depressing horn mark of pad.

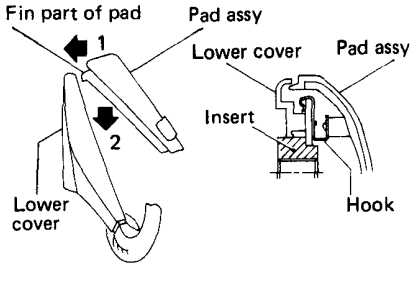

Fig. 11-14 Installing pad (2-spoke soft type steering wheel)

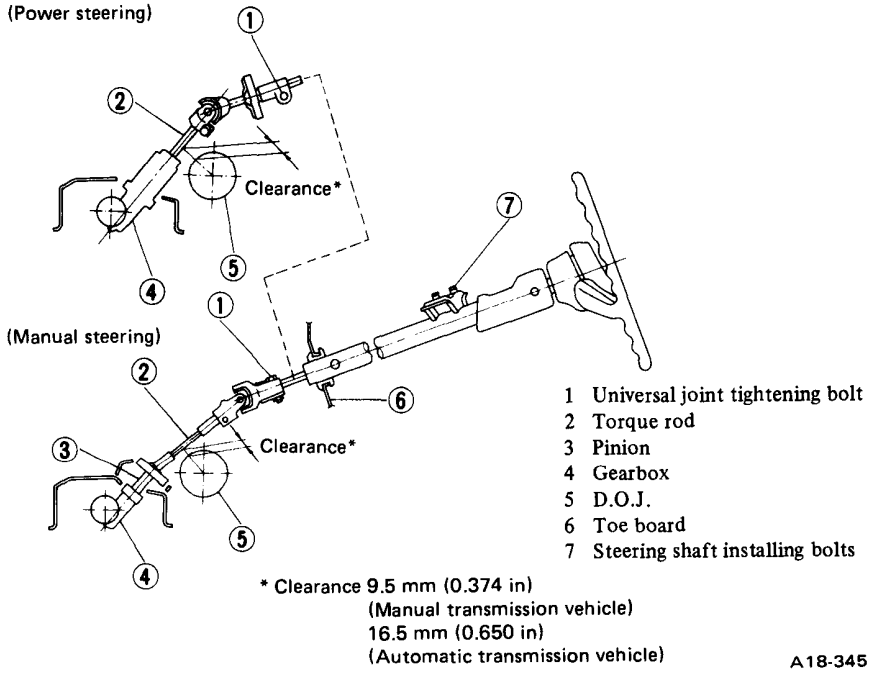

Fig. 11-15 Installation of steering shaft

6. Installation

1) Insert the end of the steering shaft assembly into the universal joint through the grommet of the toe board.
2) Tighten the steering shaft installing bolts under instrument pannel.

Torque	20 – 31 N·m (2.0 – 3.2 kg-m, 14 – 23 ft-lb)

3) Connect connector for ignition-starter switch and combination switch wiring harness under instrument pannel.
4) Tighten the universal joint bolt.

Torque (Universal joint bolt)	22 – 25 N·m (2.2 – 2.6 kg-m, 16 – 19 ft-lb)

NOTE:
a. Confirm that the bolt is aligned with the notch on the steering shaft serration.
b. Make sure to insert bolt and washer from the recession of universal joint.

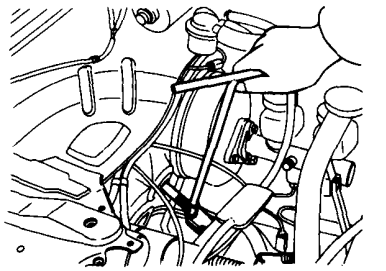

Fig. 11-16 Tightening universal joint bolt

Downloaded from www.Manualslib.com manuals search engine

11-5. Tilt Steering Wheel

1. General

The tilt steering wheel is designed to adjust up or down in seven steps from the neutral position: four steps upward (9°48′) and three steps downward (7°21′).

Tilting of the steering wheel is accomplished by means of a universal joint (utilized as a pivot), which is attached to the steering shaft located beneath the instrument panel.

Two "arc" shaped gears are used to engage and disengage all of the tilt positions and are operated by the tilt lever.

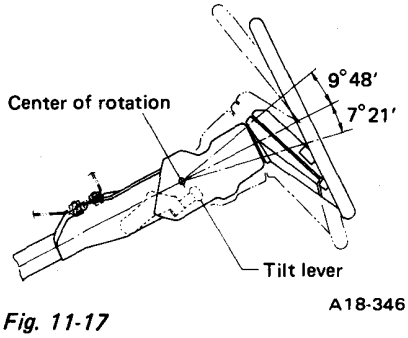

Fig. 11-17

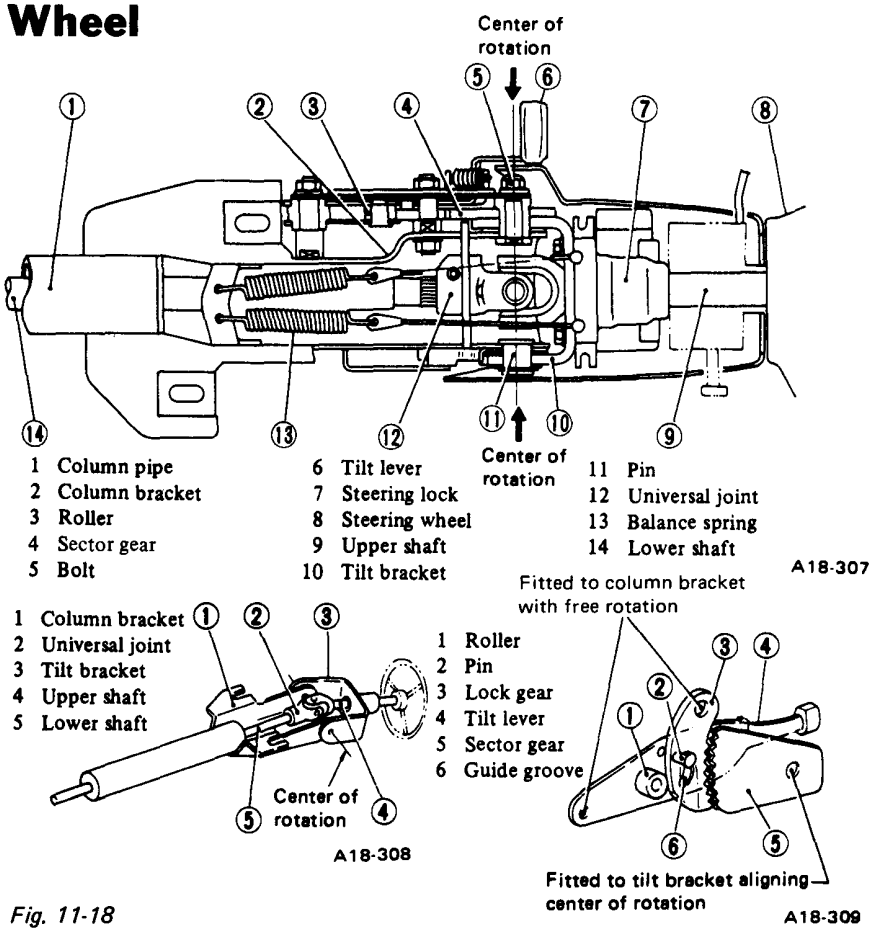

Fig. 11-18

2. Construction

The upper shaft ⑨ is attached to the steering lock ⑦ by a bearing. The upper end of the upper shaft is attached to the steering wheel ⑧ and the lower end is connected to the lower shaft ⑭ by means of the universal joint ⑫.

The tilt bracket ⑩, which is attached to the column bracket ② by the bolt ⑤ and pin ⑪, moves up or down, along with the steering lock ⑦, with the bolt and pin used as pivot.

The column pipe ① and column bracket ② are welded into a one-piece construction, and the lower shaft ⑭ is incorporated in this one-piece structure.

The balance springs ⑬ are placed between the column bracket ② and tilt bracket ⑩ to hold the steering wheel in the upward direction by their tension.

The shock absorbing unit is of an elliptic, expanding pipe design while the column bracket is a collapsible column design.

3. Operation

1) The tilt lever is provided with a guide groove of gourd design, as shown in the figure. Into the groove is inserted a pin that is unitized with the lock gear.

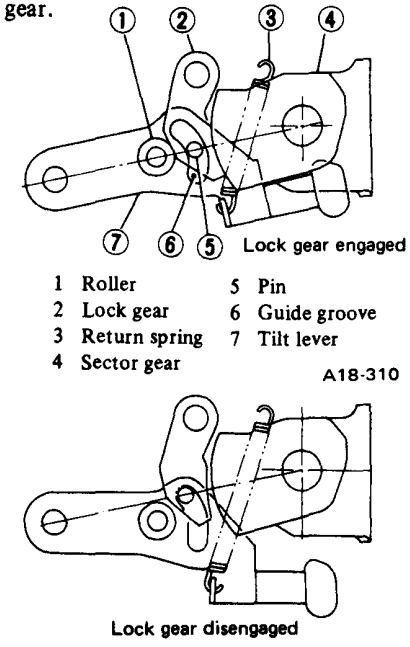

Fig. 11-19

2) The tilt lever is equipped with a roller that pushes the rear face of the lock gear by the lever spring, locking the engagement of the lock gear with the sector gear without any clearance.

3) When the tilt lever is pushed down, the roller on the tilt lever moves away from the rear face of the lock gear and the pin that is unitized with the lock gear moves along the guide groove. This then causes the lock gear to release the sector gear.

4) With the steering wheel positioned at any desired angle, releasing the tilt lever will return the lever to the original position by return spring tension. This causes the roller (unitized with the tilt lever) to push the rear face of the lock gear, so that the lock gear is engaged with the sector gear.

The force of the roller against the rear face of the lock gear is added by the "wedging" effect.

Downloaded from www.Manualslib.com manuals search engine

4. Component Parts

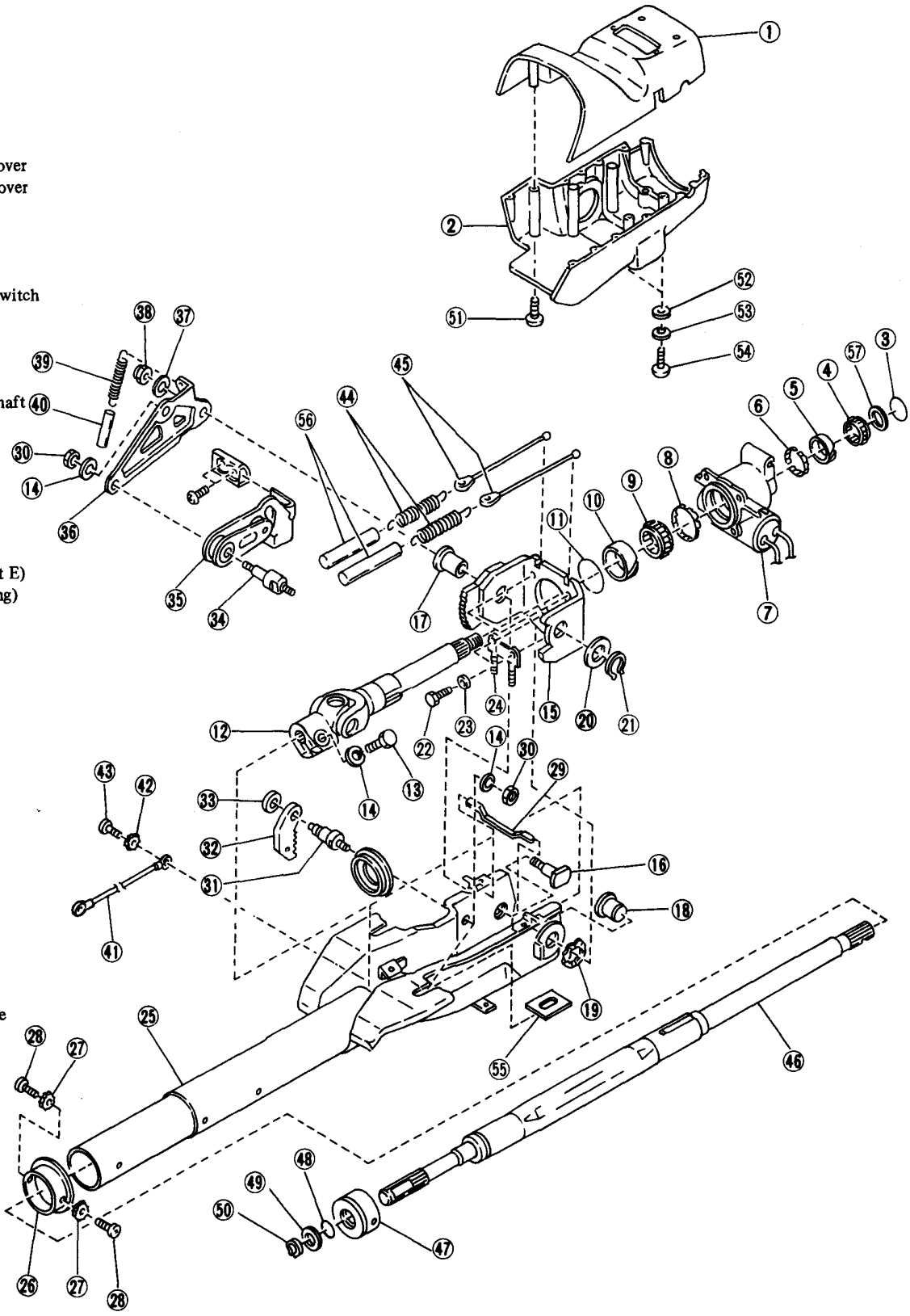

1 Upper column cover
2 Lower column cover
3 Stop ring (B)
4 Needle (B)
5 Race (B)
6 Spring (B)
7 Ignition-starter switch
8 Spring (A)
9 Needle (A)
10 Race (A)
11 Stop ring (A)
12 Universal joint shaft
13 Bolt
14 Spring washer
15 Tilt bracket
16 Bolt (A)
17 Bushing (A)
18 Shaft (E)
19 Wave washer
20 Washer (for shaft E)
21 Clip (for snap ring)
22 Bolt
23 Spring washer
24 Coating clip
25 Steering column
26 Stopper
27 Lock washer
28 Tapping screw
29 Rod
30 Nut
31 Shaft (D)
32 Lock gear
33 Spacer
34 Shaft (B)
35 Tilt lever
36 Plate
37 Washer
38 Self-locking nut
39 Lever spring
40 Vinyl tube
41 Ground lead wire
42 Spring washer
43 Tapping screw
44 Balance spring
45 Tension cord
46 Steering shaft
47 Lower bearing
48 O-ring
49 Washer
50 Snap ring
51 Tapping screw
52 Washer
53 Spring washer
54 Tapping screw
55 Coating plate
56 Vinyl tube
57 Washer

A18-347

Fig. 11-20

Downloaded from www.Manualslib.com manuals search engine

5. Removal

1) Disconnect tension cords, then remove the cords and balance springs together. To facilitate removal, it is good practice to set steering wheel at the extreme upward tilt position in advance.
2) Remove universal joint retaining bolt, loosen lower bearing screws, then withdraw shaft and bearing as a unit downward.
3) Remove snap ring, then detach washer, O-ring, bearing and housing as a unit from the shaft.
4) Remove ignition-starter switch retaining bolts, then detach switch and universal joint shaft from tilt bracket.

Remove stop ring (A) from the switch using a sharp-end tool, then withdraw needle (A) and race (A). Remove spring (A) using a sharp-end tool.

Similarly, remove stop ring (B), detach washer, needle (B) and race (B), then remove spring (B) using a sharp-end tool.

NOTE:
Be careful not to scratch bearing, race, and mating surface of ignition-starter switch to bearing.

5) Remove lever spring.
6) Remove two nuts and self-locking nut, then detach plate.
7) Remove lock gear and lever assembly as a unit while sliding them.
8)
a. Remove snap ring, detach washer, then withdraw shaft (E).
b. Remove bolt (A), then detach bushing (A).
c. Remove tilt bracket.

NOTE:
Be careful not to lose wave washer.

d. Loosen two nuts, then detach shafts (B), (D).
9) Do not remove rod unless it is worn or otherwise damaged. If it should be removed, set up one end of column bracket vertically.

6. Inspection

Completely clean all disassembled parts, removing grease and dust using a clean cloth. Check for any abnormalities, such as wear, damage, etc. Repair or replace any faulty part, as required.

No.	Part to check	Inspection	Remedial action
1	Lower column bearing	• Wear or damage Check both axial and radial play with bearing installed on steering shaft.	Replace bearing and O-ring, as required.
2	Steering shaft (collapsible shaft)	• Length Specs.: 644.9 ± 1 mm (25.39 ± 0.04 in) 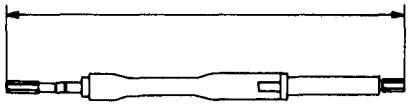 *Fig. 11-21* A18-313 • Shaft runout ① Elliptic, pressed portion (outer dia. when rotated): 32.6 mm (1.283 in) or less ② Tip end of shaft (runout): 1.2 mm (0.047 in) or less 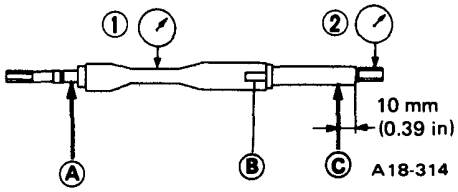 A Lower bearing location B Staked portion C Upper support location *Fig. 11-22* • Staked portion • Damage	Replace shaft, as required.

Downloaded from www.Manualslib.com manuals search engine

No.	Part to check	Inspection	Remedial action
3	Snap ring	• Deformity or fatigue	Replace
4	Universal joint shaft	• Looseness • Yawing torque Looseness: 0 mm (0 in) Maximum yawing torque: 0.3 N·m (0.03 kg-m, 0.2 ft-lb) 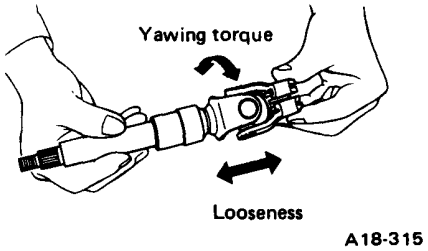 *Fig. 11-23* • Damage to shaft and key lock collar at needle bearing location • Damaged or cracked key lock collar	Replace shaft, as required.
5	Race (A) Race (B)	• Deformity or scratches	Replace races (A), (B) and needles (A), (B) as a unit.
6	Needle (A) Needle (B)	• Deformity, scratches or damage	Replace needles (A), (B) and races (A), (B) as a unit.
7	Spring (A) Spring (B)	• Deformity or fatigue	Replace
8	Stop ring (A) Stop ring (B)	• Deformity or breakage	Replace
9	Balance spring	• Fatigue	Replace
10	Lever spring		
11	Tension cord	• Wear, breakage, or poor connection	Replace
12	Lock gear	• Dents, wear or cracks on gear teeth	Replace lock gear and tilt bracket as a unit.
13	Tilt bracket	• Dents, wear or cracks on tooth faces • Wear of pin portion • Damage	Replace tilt bracket and lock gear as a unit.
14	Tilt lever	• Roller jamming	Replace
15	Coating plate	• Deformity or cracks	Replace

Downloaded from www.Manualslib.com manuals search engine

7. Installation

1) Install bearing, O-ring, washer and snap ring onto steering shaft. Apply a coat of grease to the frictional surface of the shaft (at the lower bearing location).

Grease brand	SUNLIGHT 2, Auto Lex A or its equivalent

NOTE:
Be careful not to deform snap ring.

2) Attach springs (A), (B) to the grooves in ignition-starter switch.

NOTE:
Ensure that springs (A), (B) face in direction in which races (A), (B) are inserted as indicated by the arrows in the figure.

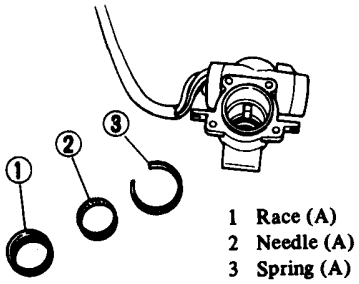

1 Race (A)
2 Needle (A)
3 Spring (A)

A18-316

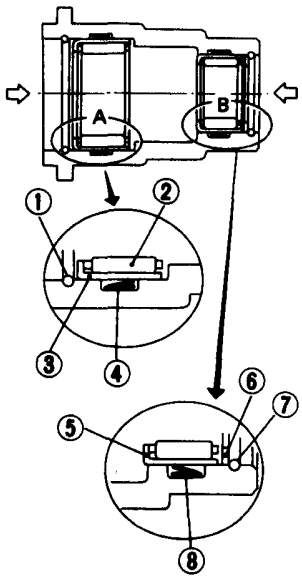

1 Stop ring (A)
2 Needle (A)
3 Race (A)
4 Spring (A)
5 Race (B)
6 Washer
7 Stop ring (B)
8 Spring (B)

A18-317

Fig. 11-24

3) Attach needle (A) to race (A), and needle (B) to race (B), then insert them into ignition-starter switch, as shown in the figure.

NOTE:
Ensure that the mating surface of ignition-starter switch is clean and free of foreign matter.

4) Install stop ring (A), washer, and stop ring (B).

NOTE:
Ensure that stop rings are fitted properly in the grooves.

5) Apply about 3 grams (0.11 oz) of grease to the inner walls of needles (A), (B).

Grease brand	SUNLIGHT 2, Auto Lex A or its equivalent

NOTE:
Be careful not to drop or strike ignition-starter switch while handling it.

6) Install universal joint shaft to ignition-starter switch, as shown in the figure, to get their relative positions.

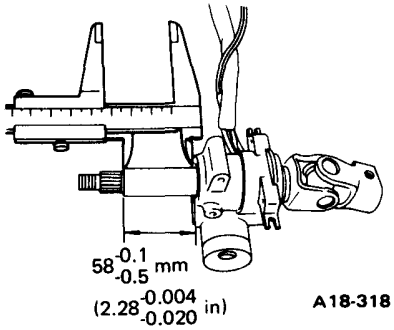

A18-318

Fig. 11-25

NOTE:
a. Be careful not to strike or apply shocks to the joint shaft and switch during installation.
b. After installation, turn the shaft to ensure that it operates properly without binds.

7) Apply a coat of grease to the frictional surface of steering column against tilt bracket, position wave washer, then install tilt bracket.

NOTE:
Be careful not to drop wave washer.

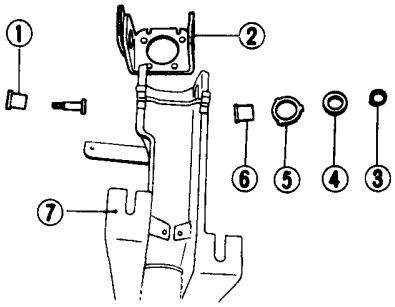

1 Bushing (A)
2 Tilt bracket
3 Snap ring
4 Washer
5 Wave washer
6 Shaft (E)
7 Steering column

A18-319

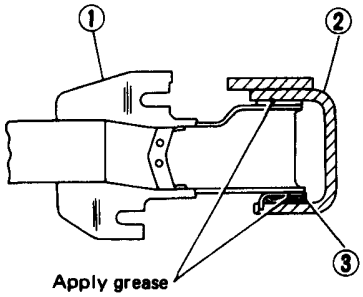

1 Column bracket
2 Tilt bracket
3 Wave washer

A18-320

Fig. 11-26

8) Align steering column and tilt bracket at the holes, insert bushing (A) and shaft (E), then install snap ring to shaft with washer in place.

Apply a coat of grease to the inner and outer walls of bushing as well as to the outer wall of shaft.

NOTE:
Ensure that snap ring fits properly in the groove on shaft (E).

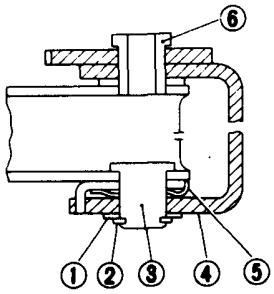

1 Washer
2 Snap ring
3 Shaft (E)
4 Tilt bracket
5 Wave washer
6 Bushing (A)

A18-321

Fig. 11-27

Downloaded from www.Manualslib.com manuals search engine

9) Attach shafts (B), (D) and bolt (A) to the steering column, then temporarily tighten the two shafts with spring washers and nuts.

NOTE:
Ensure that the brazed portions of the two shafts are inserted into the steering column's holes.

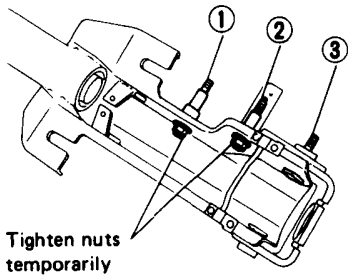

1 Shaft (B)
2 Shaft (D)
3 Bolt (A)

A18-322

Fig. 11-28

10) Apply a coat of grease to shafts (B), (D), then insert lock gear guide pin into the groove on tilt lever. With guide pin held in that position, install tilt lever on shaft (B) and lock gear on shaft (D).

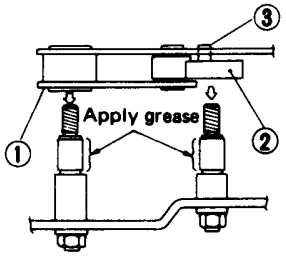

1 Lever assembly
2 Lock gear
3 Guide pin

A18-323

Fig. 11-29

11) Apply a coat of grease to the outer periphery of roller and teeth surfaces of both lock and sector gears.

NOTE:
Be sure to move the lever up and down several times while applying grease, until grease is applied evenly.

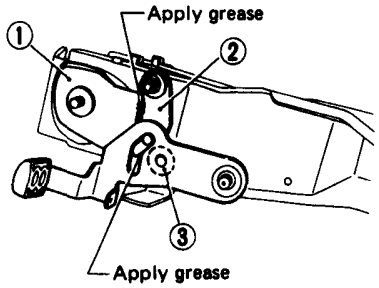

1 Sector gear
2 Lock gear
3 Roller

A18-324

Fig. 11-30

12) Attach spacer to shaft (D). Install plate while aligning it with bolt (A) and shafts (D), (B) at holes.

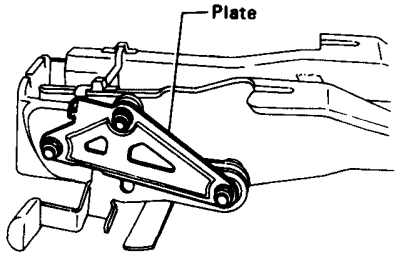

Fig. 11-31 A18-325

13) Temporarily tighten shafts (B), (D) with spring washers and nuts, and bolt (A) with washer and self-locking nut.

NOTE:
Ensure that the brazed portions of shafts (B), (D) are aligned with the holes in plate.

14) Apply a thin coat of grease to the surface of return spring, then install a vinyl tube onto spring, and attach spring to hook of tilt lever and plate.

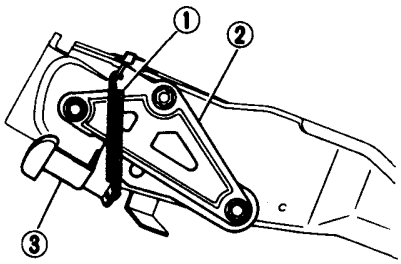

1 Return spring
2 Plate
3 Lever assembly

A18-326

Fig. 11-32

15) Move tilt lever up and down several times until the clearance between the cutout portion of plate and tilt lever is 4 to 8 mm (0.16 to 0.31 in), then tighten all nuts securely.

Tightening torque	
Nut (4 places)	12 – 22 N·m (1.2 – 2.2 kg-m, 9 – 16 ft-lb)
Self-locking nut	9 – 13 N·m (0.9 – 1.3 kg-m, 6.5 – 9.4 ft-lb)

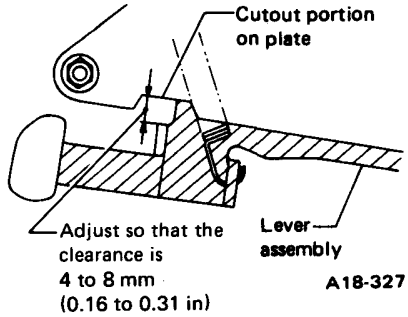

A18-327

Fig. 11-33

NOTE:
This adjustment is important for proper function of the tilt steering and should always be made properly.

16) Guide the universal joint through the hole in the tilt bracket, then install the ignition-starter switch.
17) Install and tighten the ignition-starter switch on the tilt bracket with the four bolts. The lower two bolts should be tightened together with the coating clip.

Tightening torque	8 – 12 N·m (0.8 – 1.2 kg-m, 5.8 – 8.7 ft-lb)

18) Insert the steering shaft into the lower side of the steering column until it reaches the serration of the universal joint.

NOTE:
Ensure that the universal joint fits into the cutout in the steering shaft's serration at the bolt hole location.

Downloaded from www.Manualslib.com manuals search engine

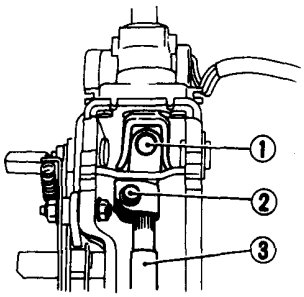

1 Universal joint
2 Bolt
3 Steering shaft

A18-328

Fig. 11-34

19) Align the holes in the steering shaft's bearing and the steering column, then tighten the lock washer and tapping screw. Tighten the universal joint with the bolt.

Tightening torque	
Bearing	1.8 – 2.7 N·m (0.18 – 0.28 kg-m, 1.3 – 2.0 ft-lb)
Universal joint	22 – 25 N·m (2.2 – 2.6 kg-m, 16 – 19 ft-lb)

20) Apply a thin coat of grease to the surfaces of balance springs, and install vinyl tubes onto springs. Then attach springs to the hooks of steering column and the eyes of tension cords to the concave portions of tilt bracket.

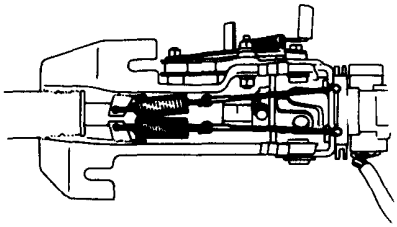

A18-329

Fig. 11-35

NOTE:
a. Ensure that the eyes of tension cords are properly inserted into the concaves in the tilt bracket.
b. Ensure that tilt lever is locked at each position when lever is operated.
c. Ensure that the tip end of universal joint does not show any looseness in both vertical and horizontal directions.

21) Properly insert combination switch into universal joint shaft, then clamp ignition-starter switch harness and combination switch harness with two coating clips each.
22) Install upper and lower column covers while aligning them with the bosses in ignition-starter switch, then tighten combination switch and column covers.

NOTE:
Do not twist column covers while installing.

23) Install column cover fixture.

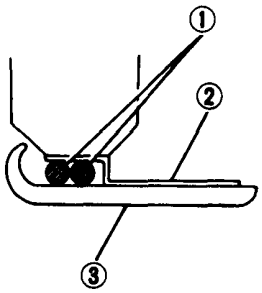

1 Harness
2 Bracket
3 Column cover fixture

A18-330

Fig. 11-36

NOTE:
Ensure that both ignition-starter switch and combination switch harnesses are arranged between the column cover fixture and mounting bracket.

24) Attach coating plates to steering column.

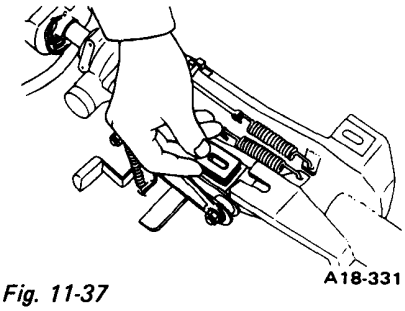

A18-331

Fig. 11-37

NOTE:
The cutout portion makes it easier to attach coating plates securely.

25) Install steering column on vehicle body.

Tightening torque	20 – 29 N·m (2 – 3 kg-m, 14 – 22 ft-lb)

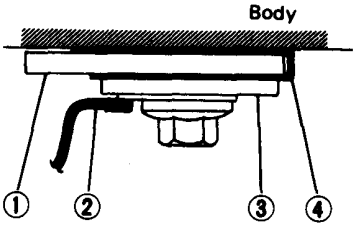

1 Column
2 Ground lead wire
3 Washer
4 Coating plate

A18-332

Fig. 11-38

NOTE:
Ensure that the right side of the column is tightened together with the ground terminal and that coating plates are not dislocated.

Downloaded from www.Manualslib.com manuals search engine

11-6. Steering Gearbox (Manual Steering System)

1. Construction

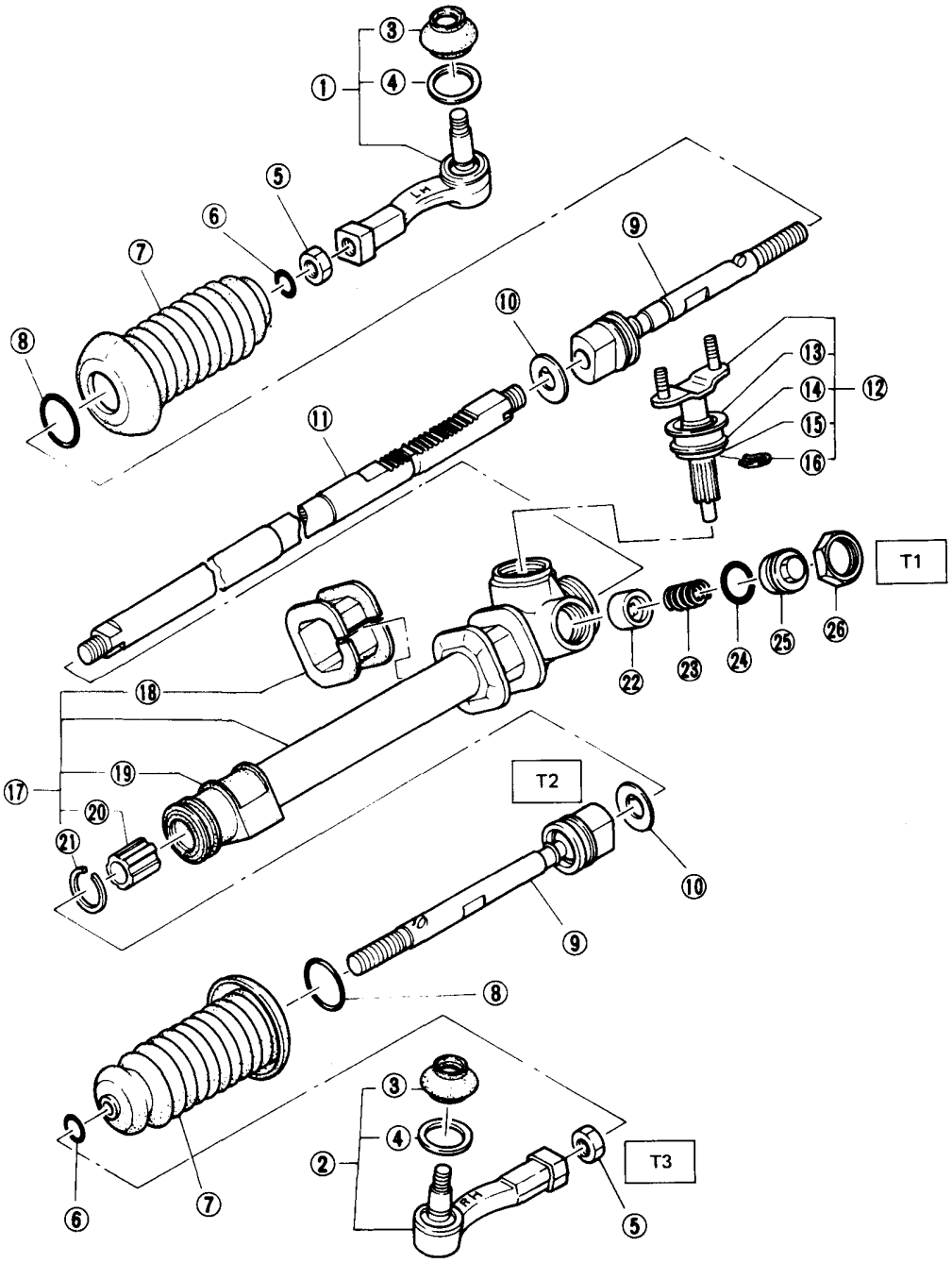

Tightening torque N·m (kg-m, ft-lb)
T1: 29 – 49 (3 – 5, 22 – 36)
T2: 78 (8, 58)
T3: 78 – 88 (8 – 9, 58 – 65)

1 Tie-rod end assembly (LH)
2 Tie-rod end assembly (RH)
3 Dust seal
4 Snap ring
5 Nut
6 Clip
7 Boot
8 Clip
9 Tie-rod complete
10 Lock washer
11 Rack
12 Pinion assembly
13 Oil seal
14 Snap ring
15 Ball bearing
16 Snap ring
17 Gearbox unit
18 Adapter B
19 Adapter A
20 Bushing A
21 Clip
22 Sleeve
23 Spring
24 O-ring
25 Adjusting screw
26 Lock nut

A18-125

Fig. 11-39 Construction of steering gearbox

Downloaded from www.Manualslib.com manuals search engine

2. Removal

1) Disconnect ground cable from battery.
2) Jack up vehicle, place safety stands (rigid racks) under both front lifting points, and then remove both front wheels.
3) Pull out the cotter pin, loosen the castle nut and remove the tie-rod end from the knuckle arm of the housing by using a puller etc.

In order to remove the tie-rod end from the housing easily, apply a penetrating oil (CRC, LOOSEN, SUBARU GUARD etc.) to the tie-rod end.

4) Remove the rubber coupling connecting nuts and disconnect the pinion with gearbox from the rubber coupling.

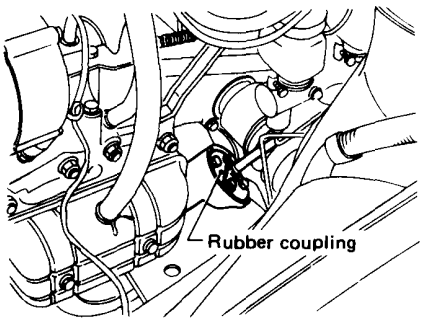

Fig. 11-40 Removing rubber coupling

5) Loosen nuts connecting the exhaust manifold with engine and pull down the exhaust manifold.
6) Remove a boot protector.
7) Remove bolts fitting the gearbox bracket to the crossmember.
8) Pull down the steering gearbox until pinion flange is pulled out of the hole of crossmember. Turn gearbox backward and pull it out toward the left side.

NOTE:
Take care not to damage the gearbox boot.

3. Disassembly

1) Vise the gearbox.

NOTE:
When vising the gearbox, insert aluminum plates between the vise and gearbox for preventing damage to the gearbox.

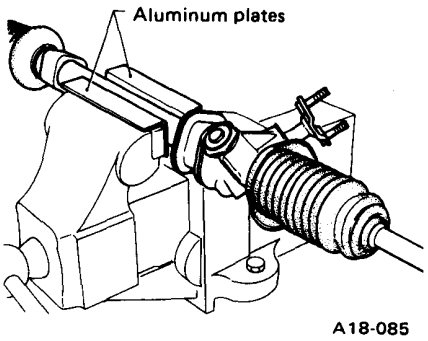

Fig. 11-41

2) Remove tie rod end and lock nut from the tie rod.
3) Remove clips (smaller and larger ones) on outside end of boot, and then remove boot from steering gearbox.

NOTE:
Be careful not to damage boot with a driver or the like when removing clips (smaller and larger ones).

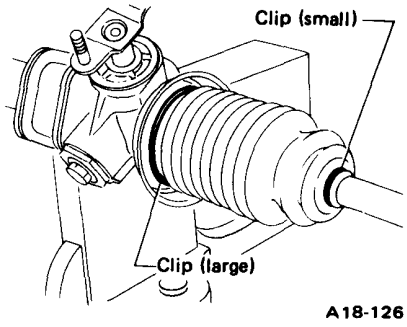

Fig. 11-42

4) Unbend the lock washer on ball joint with slot screwdriver or chisel etc.
5) Unscrew the ball joint and remove the tie rod from the rack.

NOTE:
Hold the rack with a adjustable wrench etc. to prevent it from turning.

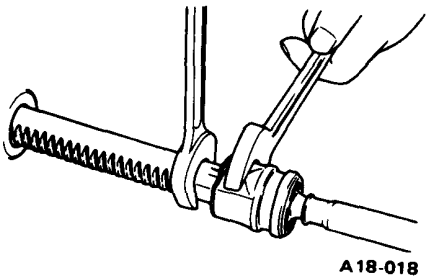

Fig. 11-43 Removing ball joint

6) Loosen the lock nut on the gearbox adjusting screw and unscrew fully the adjusting screw.

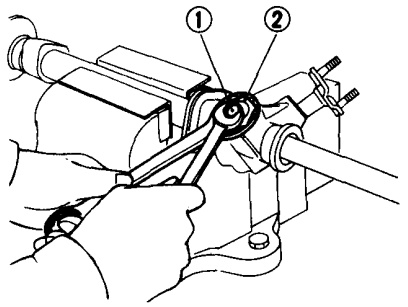

1 Adjusting screw
2 Lock nut

Fig. 11-44

7) Remove spring and sleeve.
8) Detach the oil seal of pinion from the gearbox unit with a slot screwdriver.

NOTE:
Replace the oil seal with a new one every disassembly.

9) Remove the snap ring (larger one) with snap ring pliers.

NOTE:
Be careful not to damage the housing inner face by snap ring and pliers.

Downloaded from www.Manualslib.com manuals search engine

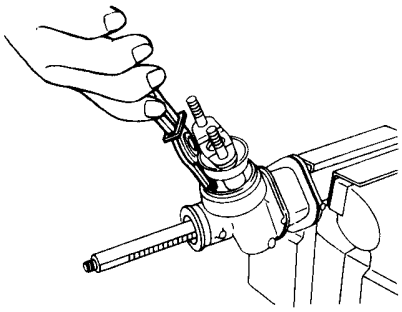

Fig. 11-45 Removing snap ring (larger one)

10) Pull out the pinion.

11) Pull out the rack from the pinion side of the gearbox unit.

NOTE:
Be careful not to damage the bushing placed inside.

12) Remove the snap ring (smaller one) on the pinion with snap ring pliers.

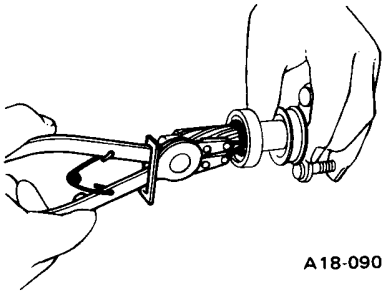

Fig. 11-46 Removing snap ring (smaller one)

13) Remove the ball bearing from pinion with a press.

NOTE:
Support the depressing force with inner race of bearing.

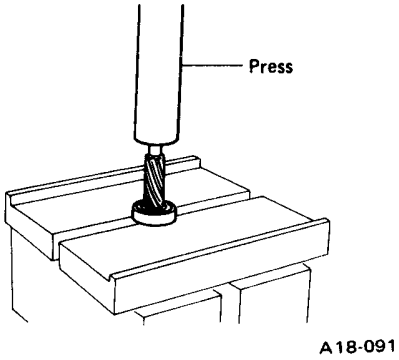

Fig. 11-47 Removing ball bearing

14) Remove the oil seal and snap ring (larger one) from pinion.

15) Remove clip from gearbox unit with a slot screwdriver.

16) Remove bushing A from the end of gearbox unit by using a aluminum bar and a hummer.

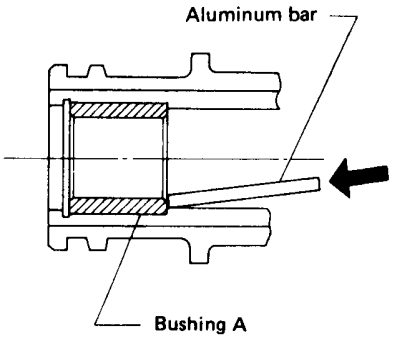

Fig. 11-48

NOTE:
Be careful not to damage inside of gearbox unit.

Downloaded from www.Manualslib.com manuals search engine

4. Inspection

1) In accordance with the following table, inspect all removed parts for wear and damage, if necessary make repair or replacement.

2) If a water infiltration is found in the steering gearbox when disassembling it may be caused by a defective oil seal on the pinion, cracked boot or defective sealing of the adjusting screw O-ring. If necessary, replace each parts with a new one.

No.	Item	Possible cause	Corrective action
1	Rubber coupling	Crack or damage	If wear or crack is notable, replace it with new one.
2	Pinion assembly	1) Damage on pinion teeth such as indentation, wear or crack	Replace it with new one as combination of pinion and rack.
		2) Smoothness of rotation or looseness of ball bearing	Replace. Be sure to use SUBARU genuine parts.
		3) Snap ring deformation	
		4) Oil seal	Replace it every disassembly.
3	Rack	1) Damage on rack teeth such as indentation, wear or crack.	Replace it with new one as combination of pinion and rack.
		2) Bend of rack shaft Bend limit: 0.1 mm (0.004 in) 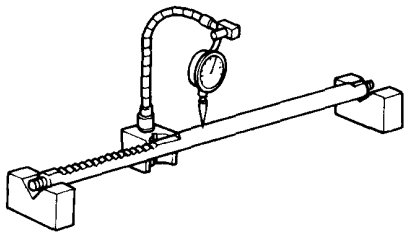 A18-068 *Fig. 11-49*	
4	Gear box unit	1) Crack on the die casted aluminum case. 2) Crack, deformation or bend on the tube portion	Replace gearbox unit.
		3) Wear or damage on bushing A	Replace.
		4) Disconnection of needle on needle bearing	Replace gearbox unit.
		5) Wear or deterioration on adapter A and B	Replace.
5	Boot	Crack, damage or deterioration	Replace.
6	Tie rod complete	1) Looseness of ball joint 2) Bend of tie rod	Replace.
7	Tie rod end	Damage or deterioration on dust seal	Replace.
8	Spring (Adjusting screw)	Deterioration	Replace.
9	Boot and clips	Deterioration	Replace.
10	O-ring of adjusting screw	Crack or deterioration	Replace.
11	Sleeve	Damage	Replace.

Downloaded from www.Manualslib.com manuals search engine

5. Assembly

NOTE:
Use only SUBARU genuine grease for gearbox.

Specified grease for gearbox
VALIANT GREASE M2 [Parts No. 003608001, net 0.5 kg (1.1 lb)]

1) Apply grease on the bushing A after fitting in bushing A and clip with a press.

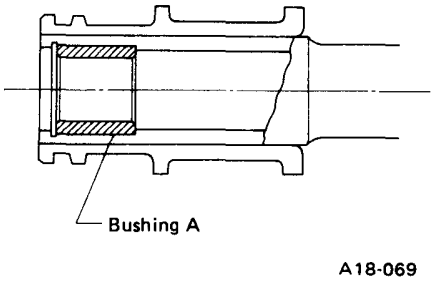

Fig. 11-50

2) Apply grease on the teeth portion and sliding portion of the rack and insert it into the gearbox unit.

NOTE:
Insert rack from pinion side surely to prevent bushing A from damage.

3) Set the rack end to be located at 76.7 mm (3.020 in) from the end of the gearbox unit.

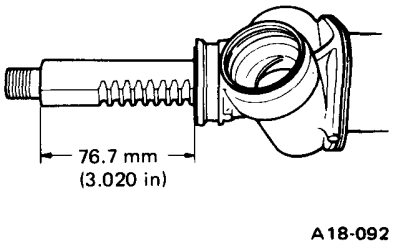

Fig. 11-51 Assembling rack

4) Apply grease on the teeth and specified portion of the pinion assembly, and insert it into the gearbox unit to mesh with the rack in a position where the direction of the pinion flange is inclined, in the straight-ahead drive condition, 36° clockwise from the center line of the hole where the sleeve is to be set.

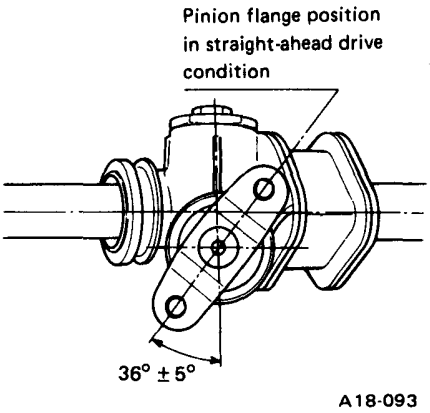

Fig. 11-52 Direction of pinion ASSY

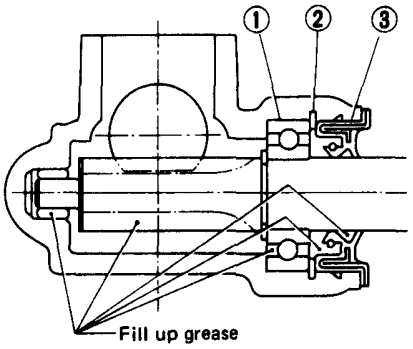

1 Ball bearing
2 Snap ring
3 Oil seal

A18-071

Fig. 11-53 Grease application

5) Install large size snap ring into groove to fix ball bearing.

NOTE:
After inserting snap ring, confirm that snap ring turns smoothly for checking of proper installation.

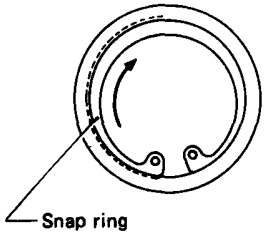

A18-070

Fig. 11-54

6) Measure the clearance in the direction parallel to pinion shaft.

Limit	0.3 mm (0.012 in)

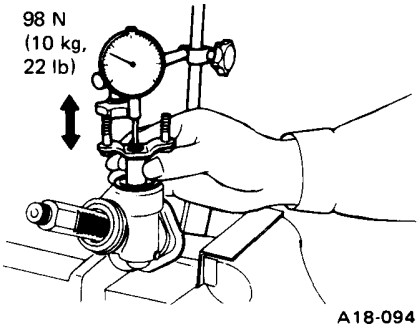

Fig. 11-55

7) Install the oil seal.
When the clearance between the flange of oil seal and gearbox is more than 0.9 mm (0.035 in), snap ring may be improperly installed.
So remove oil seal and then check snap ring installation.

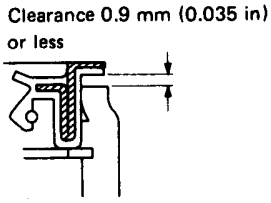

Fig. 11-56

8) Install ① sleeve and ② spring in turn and then screw in ③ adjusting screw.

NOTE:
Fill up grease.

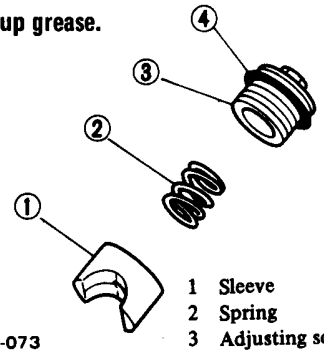

1 Sleeve
2 Spring
3 Adjusting screw
4 O-ring

A18-073

Fig. 11-57

Downloaded from www.Manualslib.com manuals search engine

9) Adjust backlash between rack and pinion as follows.

Turn adjusting screw until the turning torque increase steeply, and then turn back it 1/24 turn (15°). Lock the adjusting screw by lock nut.

This adjustment leaves a clearance of 0.063 mm (0.0025 in) between the screw tip and sleeve.

Torque (Lock nut)	29 – 49 N·m (3.0 – 5.0 kg-m, 22 – 36 ft-lb)

NOTE:
Hold the adjusting screw with a wrench to prevent it from turning while tightening the lock nut.

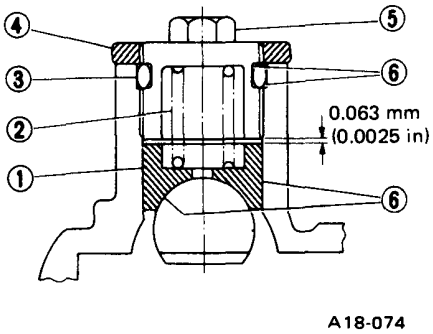

1 Sleeve
2 Spring
3 O-ring
4 Lock nut
5 Adjusting screw
6 Apply grease

Fig. 11-58 Adjusting screw

10) Check the engaging condition of rack and pinion by turning the pinion with hand. If turning is unusually heavy or harsh, readjust backlash. Put the rack and pinion in straight-ahead drive position, paint marking on the pinion shaft and oil seal.

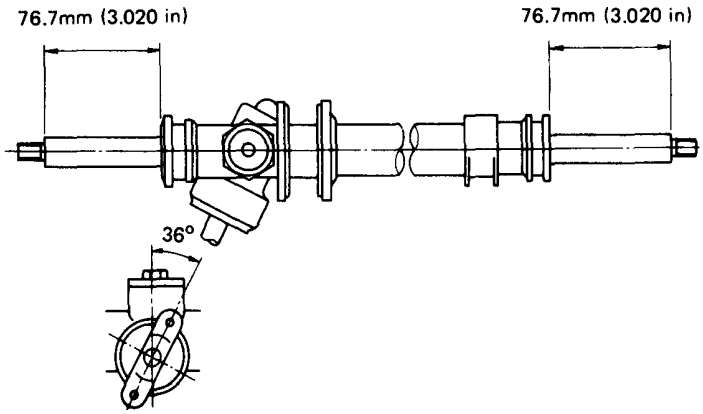

Fig. 11-59 Straight-ahead drive condition

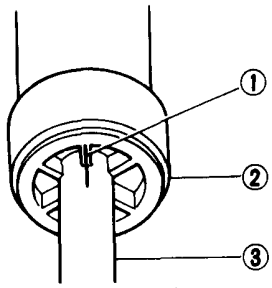

1 Marking of straight ahead drive condition
2 Oil seal
3 Pinion shaft

Fig. 11-60

11) Fit the lock washer on the screwed portion of the rack end.

Aligning the cut portion of rack and the nail of washer, screw in and tighten ball joint assembly.

Torque (Ball joint)	78 N·m (8.0 kg-m, 58 ft-lb)

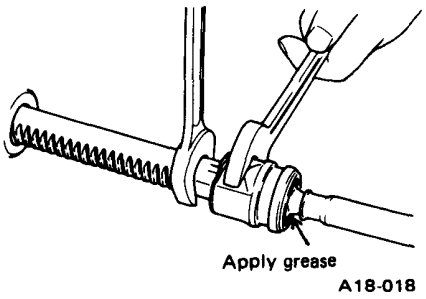

Fig. 11-61 Tightening ball joint

NOTE:
Hold the rack with a wrench to prevent it from turning while tightening the ball joint.

12) Bend the lock washer toward the plain surface of the ball joint.

NOTE:
When bending the lock washer, always put the ball joint on the plane block. Do not leave sharp edge on bent lock washer.

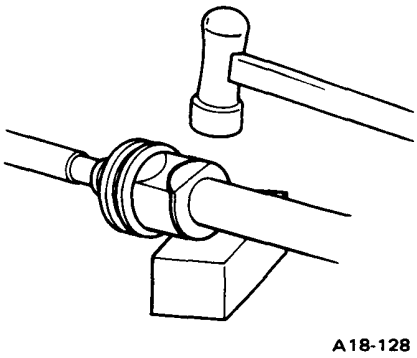

Fig. 11-62 Bending lock washer

13) Apply grease to the specified portions of the boot and then install it to gearbox.

After installing, confirm that the whole of boot turns smoothly.

Downloaded from www.Manualslib.com manuals search engine

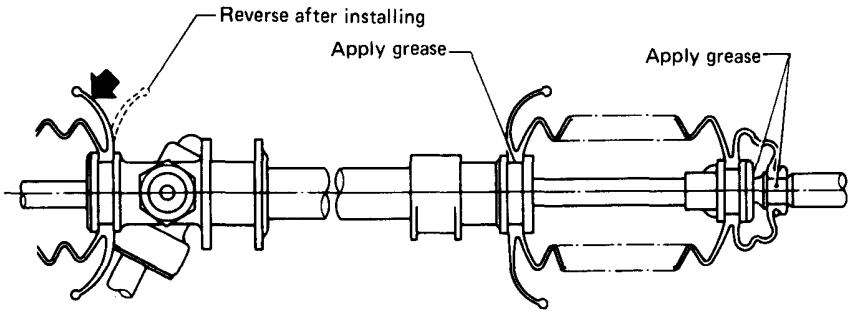

Fig. 11-63

NOTE:
a. Before installation of boots, draw out rack until maximum turning position and then apply grease again to the teeth and the sliding portion of rack for both sides.
b. Install the fitting portions of boots to the following portions in both sides of assembled steering gearbox.
1. The groove on gearbox or the groove on adaptor.
2. The groove on ball joint.
3. The groove on tie-rod.
c. Check boot is installed without unusual inflation or deflation.

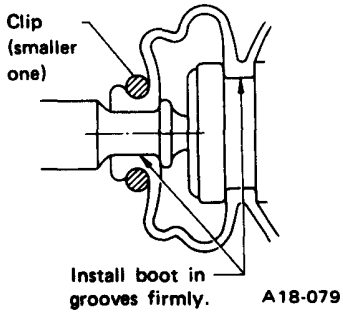

Fig. 11-64

14) Fix clips (smaller and larger ones) at the specified position of boots.

NOTE:
Use screwdriver with blunted tip to prevent boot from damage, when installing.
After installing, check boot end is positioned into the groove on tie-rod.

15) Screw in the lock nut and tie-rod end to the screwed portion of tie-rod and tighten the lock nut temporally in a position shown in figure.

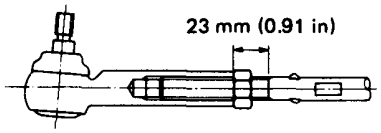

Fig. 11-65

NOTE:
Pay attention to the difference between the right and left tie-rod ends.

Identification mark	Right one	RH
	Left one	LH

16) Confirm the operation of the pinion by turning round it.

Pinion rotating torque	
Straight-ahead position within ±30 mm (1.18 in) from rack center	Less than 1.1 N·m (0.11 kg-m, 0.8 ft-lb)
Maximum allowable torque	1.5 N·m (0.15 kg-m, 1.1 ft-lb)

NOTE:
If boot deflates when pinion is turning, refill air.

6. Installation

1) Insert the gearbox ASSY into the crossmember from the left side.
Be careful to avoid damaging the gearbox boots.
2) Align the gearbox with the crossmember brackets and tighten the clamp installing bolts.

Torque (clamp bolt)	44 – 54 N·m (4.5 – 5.5 kg-m, 33 – 40 ft-lb)

NOTE:
Tighten the left clamp (pinion side) first.

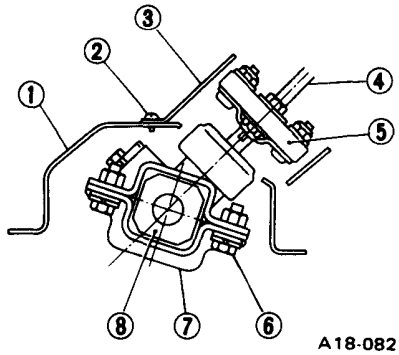

1 Crossmember
2 Screw
3 Cover
4 Torque rod
5 Rubber coupling
6 Bolt
7 Clamp
8 Gearbox

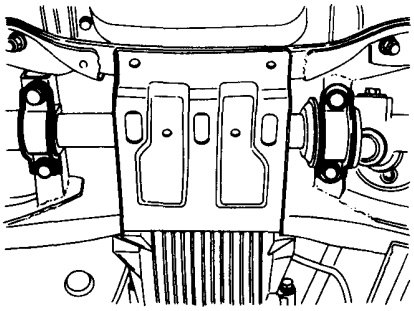

Fig. 11-66 Installing gearbox

Downloaded from www.Manualslib.com manuals search engine

3) Install a boot protector.
4) Install the exhaust manifold.

Torque (Nut)	25 – 29 N·m (2.6 – 3.0 kg-m, 19 – 22 ft-lb)

5) Connect the rubber coupling with the self-locking nuts.

Torque (Self-locking nut)	14 – 20 N·m (1.4 – 2.0 kg-m, 10 – 14 ft-lb)

NOTE:
a. Use new self-locking nut.
b. If the clearance between coupling and cover is not uniform, adjust the cover position by loosening the screws.

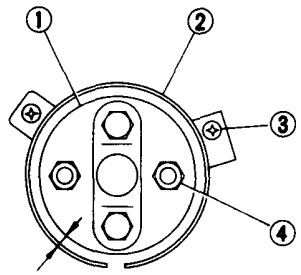

1 Rubber coupling 3 Screw
2 Cover 4 Self-locking nut

Fig. 11-67 Adjusting clearance

6) Connect tie-rod end to knuckle arm and tighten it by using castle nut.

Torque	25 – 29 N·m (2.5 – 3.0 kg-m, 18 – 22 ft-lb)

NOTE:
a. After tightening the castle nut to the specified torque, tighten additionaly in one-sixth (1/6) turn until both holes of bolt and castle nut align each other.
Then insert a new cotter pin and bend it around the castle nut.
b. Do not strike the cap on the bottom of tie-rod end with hammer or the like.

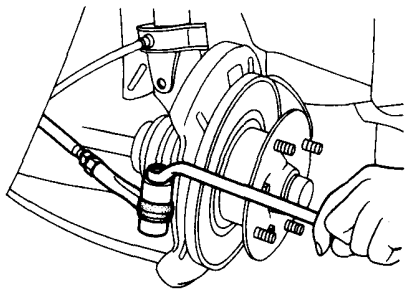

Fig. 11-68 Connecting tie-rod end with knuckle arm

7) Install the front wheels and lower the vehicle.
8) Tighten wheel nuts.
9) Tighten the lock nuts of tie-rod ends, after adjusting toe-in and turning angles.

Torque (Lock nut)	78 – 88 N·m (8.0 – 9.0 kg-m, 58 – 65 ft-lb)

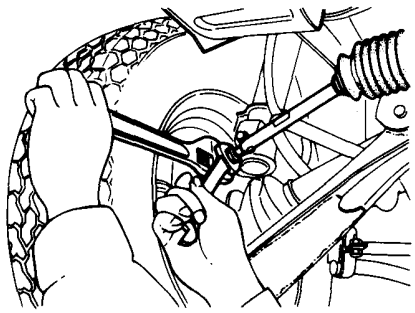

Fig. 11-69 Tightening lock nut

7. Adjustment

Adjust the toe-in of front tires.
1) Adjust the road clearance to the standard value.
2) In order to put the rack to the center of gearbox, match the white paint marks on the gearbox and the pinion.

Check the steering wheel setting position.

When the steering wheel is turned more than 9° [30 mm (1.18 in) round] from the straight, correct the steering wheel setting position to the straight.

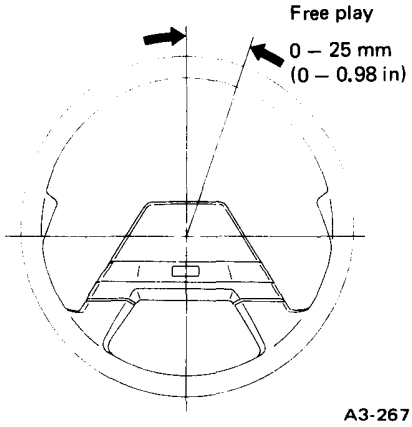

Fig. 11-70 Steering wheel setting position

3) Check the toe-in.

Toe-in (when empty)	
Except 4WD	1 ± 1 mm (0.04 ± 0.04 in)
4WD	OUT 5 ± 1 mm (0.20 ± 0.04 in)

When adjustment is necessary, loosen the lock nuts of the tie-rod ends and then turn the tie-rods as shown in figure.

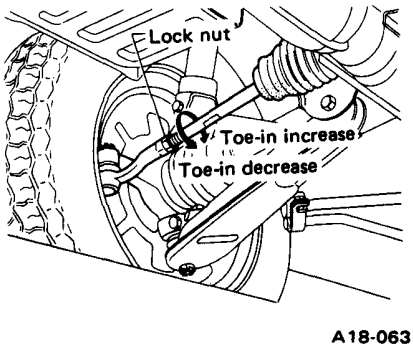

Fig. 11-71 Toe-in adjustment

Downloaded from www.Manualslib.com manuals search engine

4) Inspect the turning angle.

Turning angle (in empty)	Inner wheel: 35°30′ – 37°30′ Outer wheel: 34° – 36°

NOTE:
If the adjustment of steering angle is necessary after adjusting toe-in, adjust the right and left tie rods by turning to the same direction and same turns at a time.
Tie rod one-fourth (1/4) turn adjusts steering wheel round distance 10 mm (0.39 in).

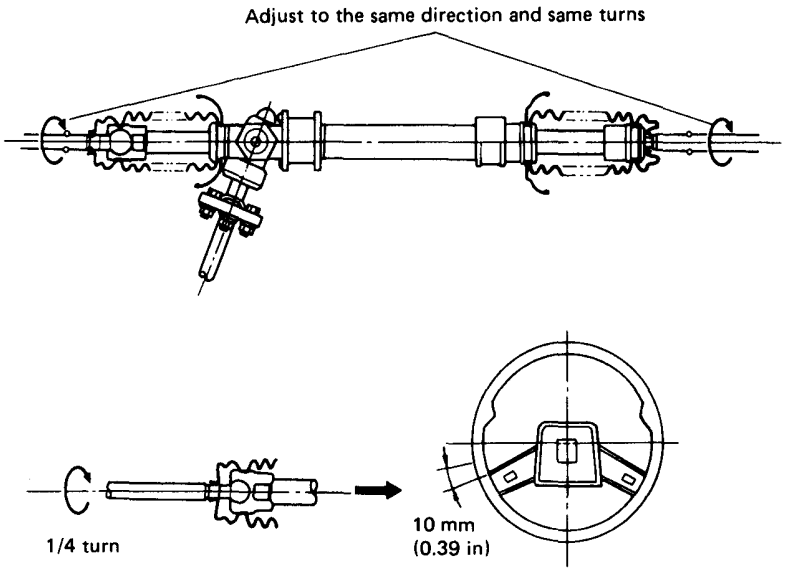

Fig. 11-72 Adjusting tie-rod

A18-083

8. Measuring Axial Displacement of Ball Joint of Tie-rod Complete (On car)

Upon inspection, if tie-rod is found to be abnormally loose, measure its axial displacement in the following manner. If the displacement is not within the limit, replace tie-rod.

1) Boot must be moved aside. Clean all mud off tie-rod.

2) Remove boot from gearbox, and move it toward tie-rod end as far as it will go. Do not allow clip on the small end of boot to come off. Remove the boot's small end from the tie-rod groove first and then the large end. Next move boot aside.

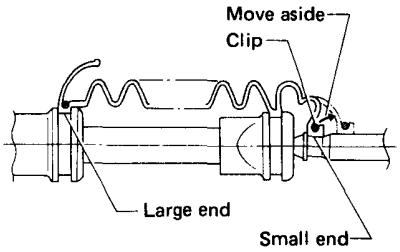

A18-349

Fig. 11-73

NOTE:
After removing boot, inspect ball joint. If it is extremely soiled with mud or rusty due to the entering of muddy water, replace both tie-rod CP and boot.

3) Set a dial gauge as shown.

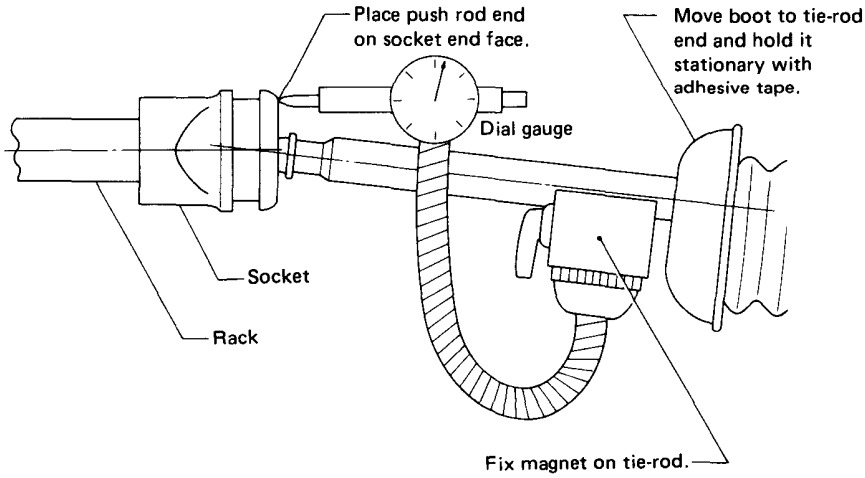

A18-350

Fig. 11-74

4) This measurement requires two operators.
Put vehicle on the ground. One operator reads the dial gauge indicator under vehicle while the other turns steering wheel 15° to 20° right and left several times.
If the reading exceeds the limit, replace tie-rod CP with a new one.

Axial displacement limit	0.4 mm (0.016 in)

5) After the above work, coat ball joint with specified grease (VALIANT M2) and properly reinstall boot as before.

NOTE:
Be sure that boot is properly fitted in the grooves of gearbox and tie-rod CP with clips attached in place.

Downloaded from www.Manualslib.com manuals search engine

11-7. Steering Gearbox (Power Steering System)

1. Construction

1 Tie-rod end ASSY LH
2 Tie-rod end ASSY RH
3 Dust seal
4 Snap ring
5 Nut
6 Clip
7 Boot
8 Clip
9 Tie-rod CP
10 Lock washer
11 Dust seal
12 Clip
13 Air vent pipe
14 Sleeve
15 Spring
16 O-ring
17 Adjusting screw
18 Lock nut
19 Gearbox unit
20 Adapter
21 Valve ASSY

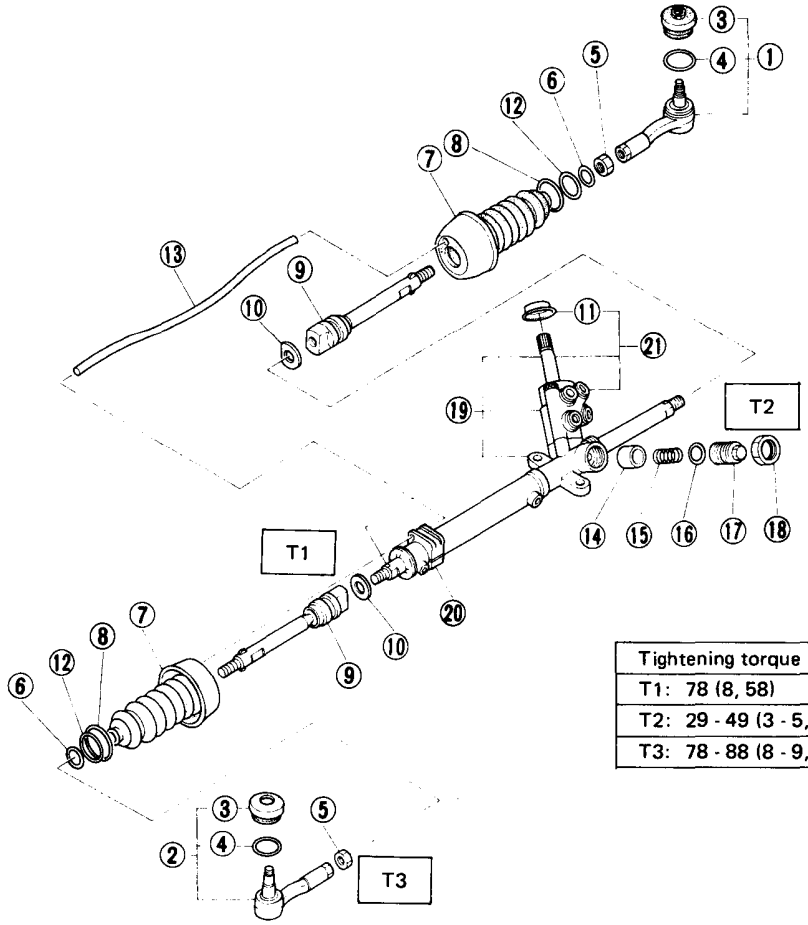

Tightening torque N·m (kg-m, ft-lb)
T1: 78 (8, 58)
T2: 29 - 49 (3 - 5, 22 - 36)
T3: 78 - 88 (8 - 9, 58 - 65)

A18-351

Fig. 11-75 Steering gearbox

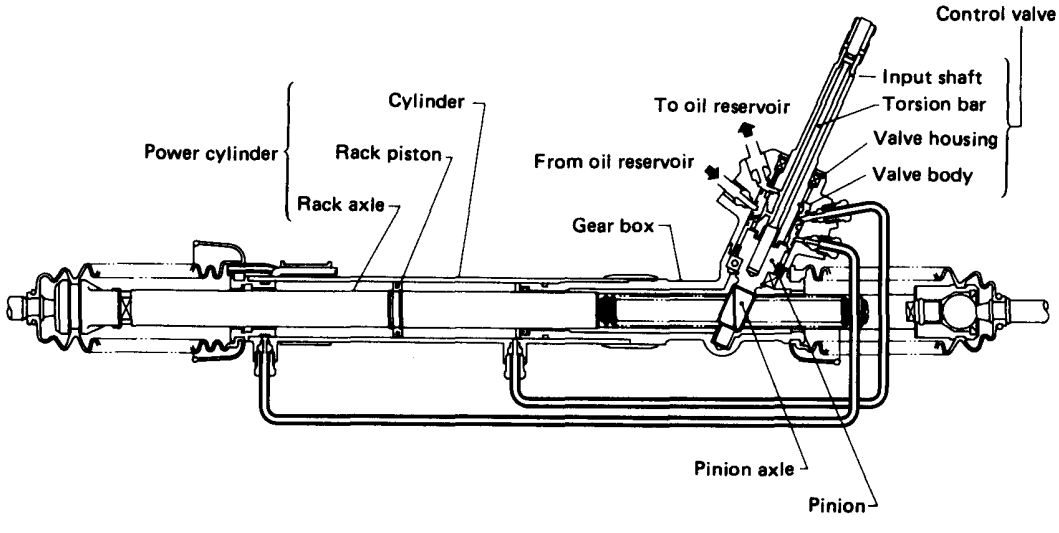

A18-137

Fig. 11-76

Downloaded from www.Manualslib.com manuals search engine

2. Removal

1) Disconnect ground cable from battery, and take out spare tire.
2) Jack up vehicle and place safety stands under both of front lifting points and then remove both of front tires and wheels.
3) Pull out cotter pin, loosen castle nut and remove tie-rod end from knuckle arm of housing by using a puller etc.

In order to remove tie-rod end from housing easily, apply a penetrating oil (CRC, LOOSEN, SUBARU GUARD etc.) to tie-rod end.

Remove tie-rod end on another side housing in the same manner.
4) Detach jack-up plate.
5) Disconnect cap from O_2 sensor, and remove front exhaust pipe.
6) Remove boot protector.
7) After removing flare nuts at center of power steering gearbox, and drain the working fluid while turning steering wheel clockwise and counter-clockwise.

NOTE:
a. When removing flare nuts, wrap waste cloth around flare nuts.
b. After removing flare nuts, install vinyl tubes onto gearbox and piping to prevent the fluid from splashing.

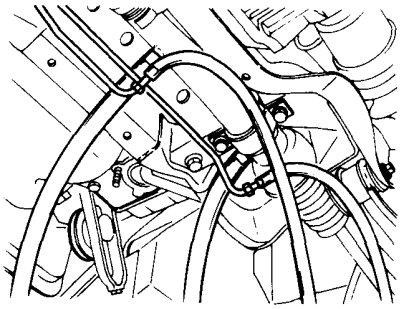

A18-152

Fig. 11-77 Draining fluid

8) Remove bolts on bottom and top sides of joint ASSY, and pull up joint ASSY.
9) Remove flare nuts of control valve above crossmember.

NOTE:
Remove a flare nut of which width across flats is 14 mm (0.55 in) by using special tools (Socket; 925670000 and Handle; 925680000).

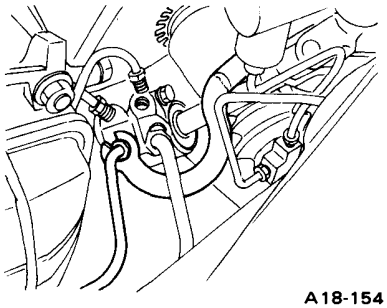

A18-154

Fig. 11-78 Removing flare nuts

10) Remove the bolt to fix both piping and gearbox to crossmember.

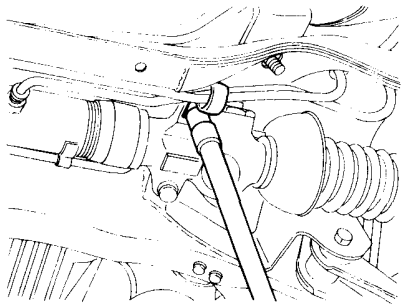

A18-352

Fig. 11-79

11) After taking out piping, detach power steering gearbox.

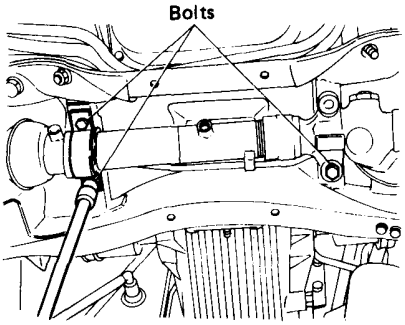

A18-156

Fig. 11-80

NOTE:
a. Take care to prevent dust and foreign matter from adhering and/ or entering onto joint portions of hydraulic piping as well as gearbox.
b. Be careful not to damage flange portion of gearbox by excessive load when removing bolts.
c. Pay attention not to damage gear-box boot.

3. Disassembly

1) Vise gearbox by using special tool (Stand; 925690000).

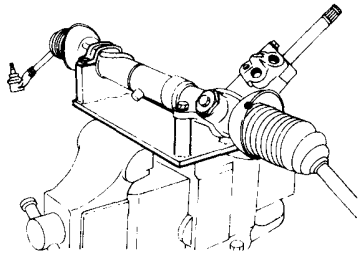

A18-157

Fig. 11-81

NOTE:
Be sure to vise gearbox by using special tool. Never vise gearbox with inserting aluminum plates etc. between vise and gearbox.

2) Pull out air vent pipe from boot.
3) Remove clip (small) on outside end of boot.

NOTE:
Be careful not to damage boot with a screwdriver or the like when removing clip.

4) Take out boot with clip (large) and clip (middle).

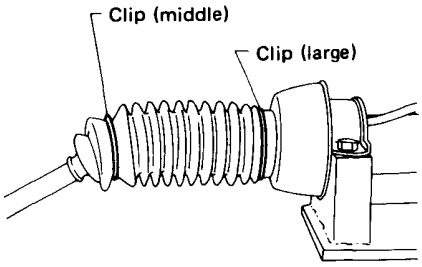

A18-159

Fig. 11-82

5) Unbend lock washer on ball joint with slot screwdriver or chisel etc.

NOTE:
Pay attention to prevent rack surface on the right side from being damaged by a tool or the like; otherwise oil leakage might be caused.

Downloaded from www.Manualslib.com manuals search engine

6) Unscrew ball joint and remove it with tie rod from rack.

NOTE:

a. While removing left-hand ball joint with tie rod, hold rack with a wrench or special tool (Wrench; 925700000) to prevent it from revolving.

b. While removing right-hand ball joint with tie rod, hold rack with special tool (Wrench; 925700000) to prevent it from revolving.

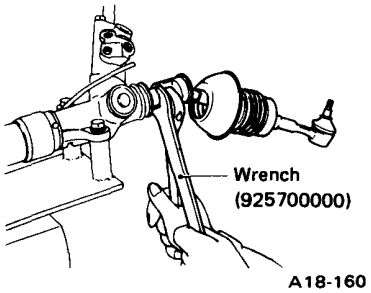

Fig. 11-83 Removing left-hand ball joint

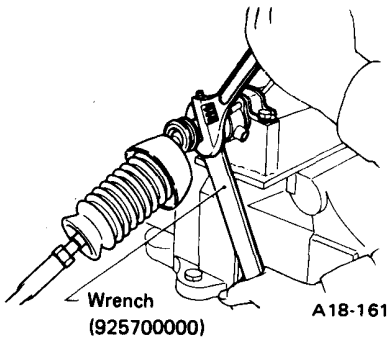

Fig. 11-84 Removing right-hand ball joint

7) Loosen lock nut on gearbox adjusting screw, and unscrew fully adjusting screw.

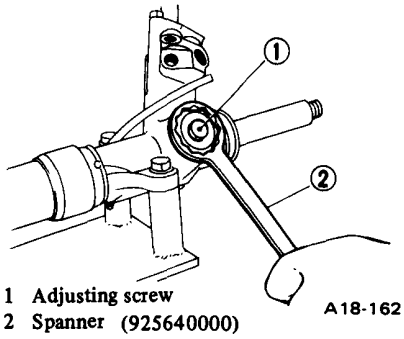

Fig. 11-85 Loosening lock nut

8) Take out spring and sleeve.

9) Remove dust seal by using a screwdriver.

NOTE:

When removing dust seal, carefully prevent housing from being damaged and foreign matter from entering the inside.

4. Inspection

- In accordance with the following table, inspect all removed parts for wear and damage, and make repair or replacement if necessary.

NOTE:

If a water infiltration is found in the steering gearbox when disassembling it may be caused by a defective dust seal on the input shaft, cracked boot or defective sealing of the adjusting screw O-ring. If necessary, replace each parts with a new one.

No.	Parts	Inspection	Corrective action
1	Rubber coupling	Crack or damage	If wear or crack is notable, replace it with new one.
2	Input shaft	(1) Bend of input shaft (2) Damage on serration	If bend or damage is excessive, replace entire gearbox ASSY.
3	Dust seal	(1) Crack or damage (2) Wear	If outer wall slips, lip is worn out or damage is found, replace it with new one.

Downloaded from www.Manualslib.com manuals search engine

No.	Parts	Inspection	Corrective action
4	Rack and pinion	Poor mating of rack with pinion	(1) Adjust backlash properly. By measuring turning torque of gearbox and sliding resistance of rack, check if rack and pinion engage uniformly and smoothly with each other. (Refer to "Service limit".) (2) Keeping rack pulled out all the way so that all teeth emerge, check teeth for damage. Even if abnormality is found in either (1) or (2), replace entire gearbox ASSY.
5	Gearbox unit	(1) Bend of rack shaft (2) Bend of cylinder portion	
		(3) Crack or damage on cast iron portion (4) Damage on coupled portion	Replace gearbox ASSY with new one.
		(5) Wear or damage on rack bushing	If free play of rack shaft in radial direction is out of the specified range, replace gearbox ASSY with new one. (Refer to "Service limit".)
		(6) Wear on input shaft bearing	If free plays of input shaft in radial and axial directions are out of the specified ranges, replace gearbox ASSY with new one. (Refer to "Service limit".)
6	Boot	Crack, damage or deterioration	Replace
7	Air vent pipe	Crack, damage or deterioration	Replace
8	Tie rod complete	(1) Looseness of ball joint (2) Bend of tie rod	Replace
9	Tie rod end	Damage or deterioration on dust seal	Replace
10	Adjusting screw spring	Deterioration	Replace
11	Boot clip	Deterioration	Replace
12	O-ring of adjusting screw	Crack, damage or deterioration	Replace
13	Sleeve	Damage	Replace

Downloaded from www.Manualslib.com manuals search engine

- **Service limit**

  Make a measurement as follows. If it exceeds the specified service limit, replace gearbox with a new one.

NOTE:
When making a measurement, vise gearbox by using special tool (Stand; 925690000). Never vise gearbox with inserting aluminum plates etc. between vise and gearbox.

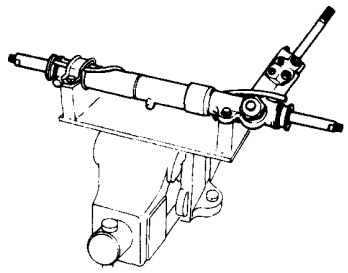

Fig. 11-86

Sliding resistance of rack shaft

Service limit	245 N (25 kg, 55 lb) or less

(Right-turn steering)

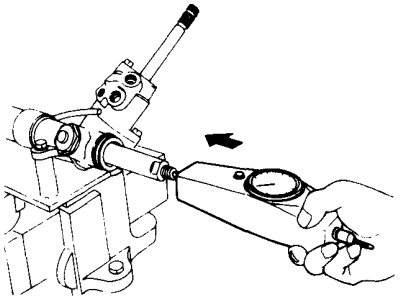

Fig. 11-87

(Left-turn steering)

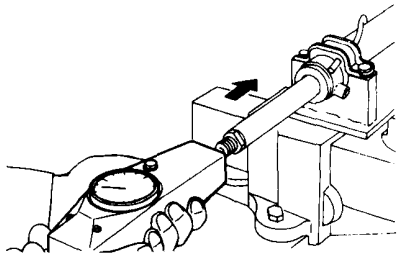

Fig. 11-88

Rack shaft play in radial direction

(Right-turn steering)

Service limit	0.15 mm (0.0059 in) or less

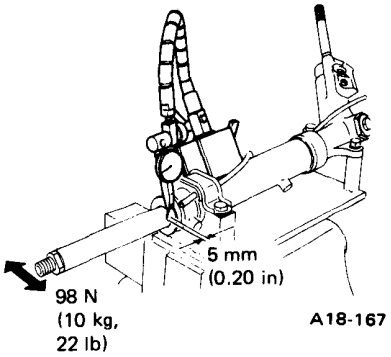

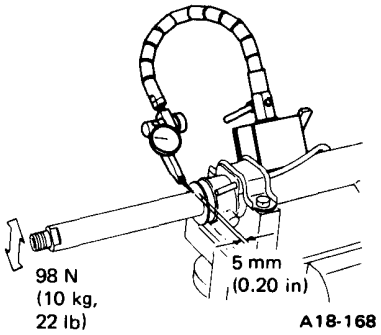

Fig. 11-89

(Left-turn steering)

Service limit	
Direction ⟷	0.3 mm (0.012 in) or less
Direction ⇔	0.15 mm (0.0059 in) or less

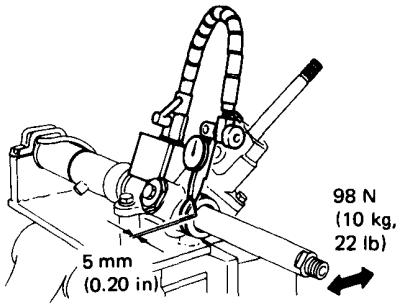

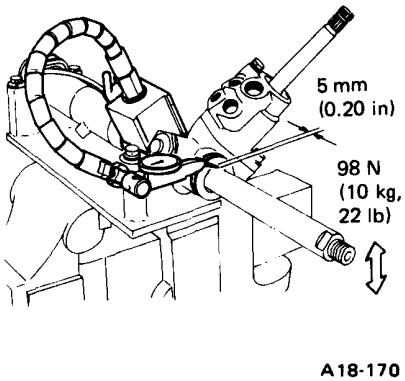

Fig. 11-90

Input shaft play

(In radial direction)

Service limit	0.15 mm (0.0059 in) or less

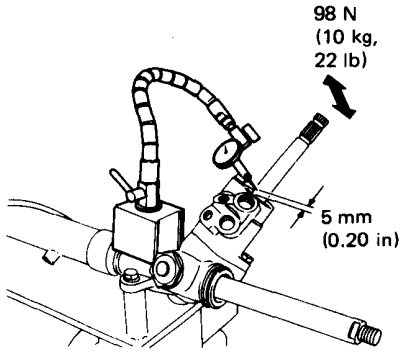

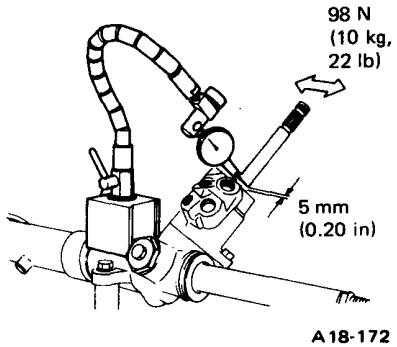

Fig. 11-91

(In axial direction)

Service limit	0.1 mm (0.004 in) or less

Downloaded from www.Manualslib.com manuals search engine

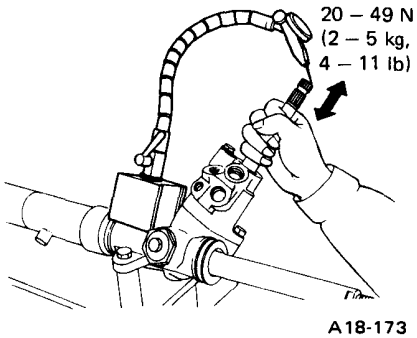

Fig. 11-92

Turning resistance of gearbox

Service limit	Straight-ahead position within 30 mm (1.18 in) from rack center	Less than 6.18 N (0.63 kg, 1.39 lb)
	Maximum allowable resistance	8.43 N (0.86 kg, 1.90 lb)

(Maximum allowable resistance)

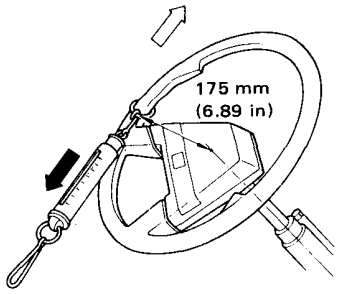

Fig. 11-93

NOTE:
When measuring rack shaft play in radial direction, put steering wheel into input shaft and turn it fully so that rack shaft is out of gearbox completely.

5. Assembly

NOTE:
Use only SUBARU genuine grease for gearbox.

Specified grease for gearbox
VALIANT GREASE M2 [Parts No. 003608001, net 0.5 kg (1.1 lb)]

1) Apply grease to teeth of rack so that grease applied is about as high as teeth, and also apply a thin film of grease to sliding portion of rack shaft.

NOTE:
a. When moving rack to stroke end without tie-rod attached, prevent shocks from being applied at the end.
b. Do not apply grease to threaded portion at end of rack shaft.
c. Move rack shaft to stroke end two (2) or three (3) times to squeeze grease which accumulates on both ends. Remove grease to prevent it from choking air vent line.

2) Apply grease to sleeve insertion hole.
3) Apply grease to dust seal insertion hole.

NOTE:
Apply clean grease with clean hands. If material having a sharp edge is used for applying grease, oil seal at the inside might be damaged.

4) Press-fit dust seal while tapping it via a spanner or the like so that stepping between gearbox and dust seal is normally 2 mm (0.08 in).

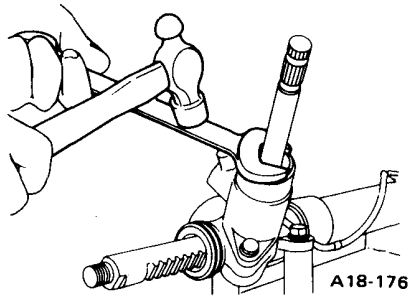

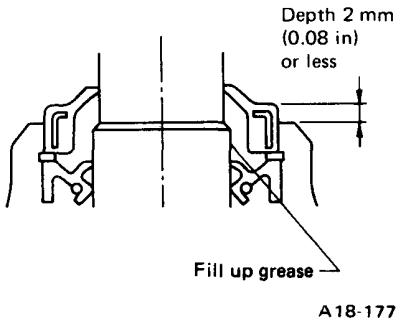

Fig. 11-94 Fitting dust seal

NOTE:
Never directly hit dust seal when press-fitting it.

5) Install sleeve and spring in turn and then screw in adjusting screw.

NOTE:
Apply grease to O-ring set groove and spring set space.

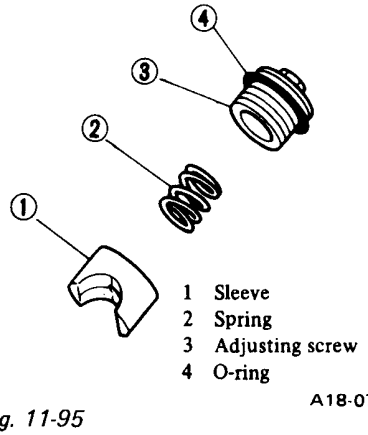

Fig. 11-95

6) Adjust backlash of rack and pinion in the following manner.

To make sure that sleeve is in contact with rack, tighten adjust screw to 5 N·m (0.5 kg-m, 3.6 ft-lb) and return it about half a rotation.

Turn adjusting screw until turning torque increase steeply, and then turn back it 1/12 turn (30°).

Lock adjusting screw by lock nut. This adjustment leaves a clearance of 0.126 mm (0.0050 in) between screw tip and sleeve.

Torque (Lock nut)	29 – 49 N·m (3 – 5 kg-m, 22 – 36 ft-lb)

NOTE:
Hold adjusting screw with a wrench to prevent it from turning while tightening lock nut.

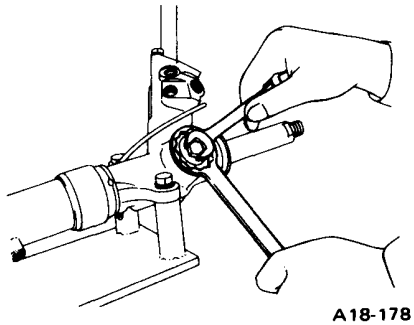

Downloaded from www.Manualslib.com manuals search engine

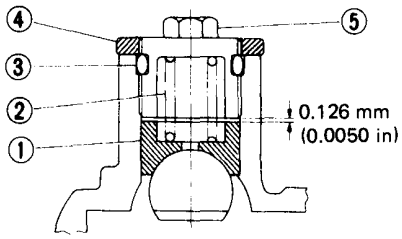

1 Sleeve
2 Spring
3 O-ring
4 Lock nut
5 Adjusting screw

A18-179

Fig. 11-96

7) Check for service limit as per article of "4. Inspection, Service limit". Make replacement and adjustment if necessary.

8) Fit new lock washer on screwed portion of rack end. Aligning cut portion of rack and nail of washer, screw in and tighten ball joint and tie rod.

Torque (Ball joint)	78 N·m (8.0 kg-m, 58 ft-lb)

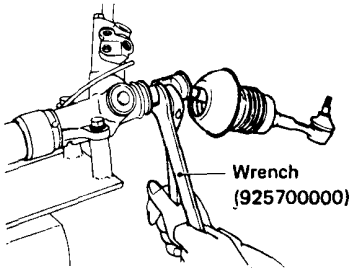

A18-160

Fig. 11-97 Tightening left-hand ball joint

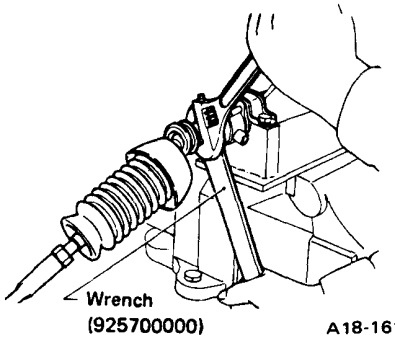

A18-161

Fig. 11-98 Tightening right-hand ball joint

NOTE:

a. While tightening left-hand ball joint, hold rack with a wrench or special tool (Wrench; 925700000) to prevent it from revolving.

b. While tightening right-hand ball joint, hold rack with special tool (Wrench; 925700000) to prevent it from revolving.

c. Pay attention to prevent rack surface on the right side from being damaged by a tool or the like, otherwise oil leakage might be caused.

9) Bend lock washer toward plain surface of ball joint, after removing gearbox assembly from stand.

NOTE:

When bending lock washer, always put ball joint on plain block. Do not leave sharp edge on bent lock washer.

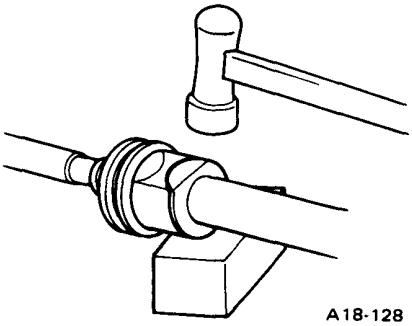

A18-128

Fig. 11-99 Bending lock washer

10) Fit clips (large and middle) to boot, and then install boot to gearbox while holding boot flange.

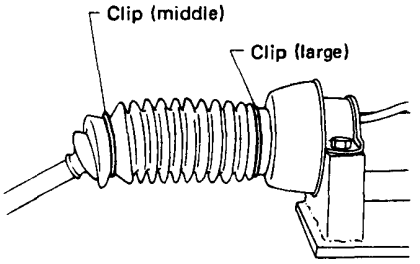

A18-159

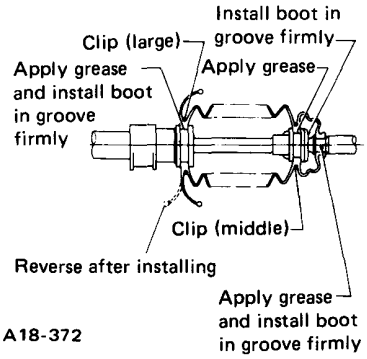

A18-372

Fig. 11-100

NOTE:

a. By rotating boot, align stopper projection with notch in gearbox groove.

b. Install fitting portions of boots to the following portions in both sides of assembled steering gearbox.

1. The groove on gearbox
2. The groove on ball joint
3. The groove on tie rod

c. Make sure that boot is installed without unusual inflation or deflation.

11) Fix boot end with clip (small).

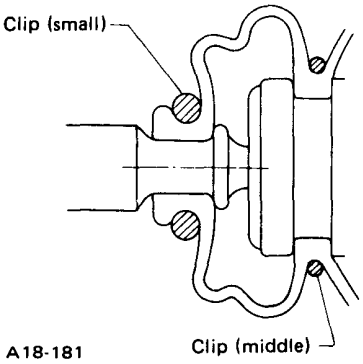

A18-181

Fig. 11-101

NOTE:

a. Use screwdriver with blunted tip to prevent boot from damage, when installing.

b. After installing, check boot end is positioned into groove on tie-rod.

12) Insert air vent pipe into the specified hole in boot.

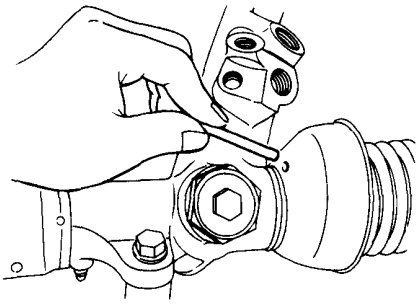

A18-182

Fig. 11-102 Inserting air vent pipe

NOTE:

a. Do not apply grease to air vent pipe; otherwise air connection might be shut off or pipe might be pulled out easily.

Downloaded from www.Manualslib.com manuals search engine

b. Insert pipe until it reaches stopper. Proper insertion distance up to the end is 13 mm (0.51 in). If pipe is inserted less than the value, it is liable to slip off. If it is inserted with an excessive force, its tip exceeds stopper and comes in contact with wall of boot, adversely affecting air connection.

13) Screw in lock nut and tie-rod end to screwed portion of tie-rod, and tighten lock nut temporally in a position as shown in a illustration.

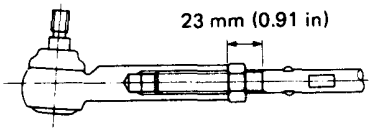

A18-080

Fig. 11-103

NOTE:
Pay attention to difference between right and left tie rod ends.

Identification mark	Right one	RH
	Left one	LH

14) Inspect gearbox assembly as follows.

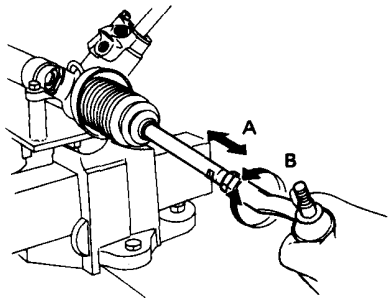

A18-183

Fig. 11-104 Inspecting gearbox ASSY

A. Holding tie-rod end, repeat lock to lock two (2) or three (3) times as quickly as possible.
B. Holding tie-rod end, turn assembly slowly at a radius one (1) or two (2) times as large as possible.

After all, make sure that boot is installed in the specified position without deflation, that air vent pipe without being disconnected and that grease is not sucked into air vent pipe.

6. Installation

1) Insert gearbox assembly into crossmember. Be careful to avoid damaging gearbox boots.
2) Align gearbox with crossmember brackets and tighten bolts to install both clamp and gearbox.

Torque (Bolts)	44 – 54 N·m (4.5 – 5.5 kg-m, 33 – 40 ft-lb)

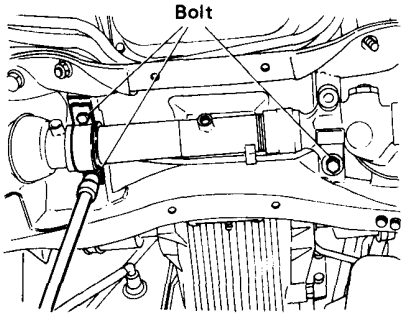

A18-156

Fig. 11-105 Tightening bolts

NOTE:
Screw the front left bolt halfway.

3) Connect pipes A, B, C and D.

NOTE:
Flare nut of pipe C at control valve can easily be tightened with special tool (Socket; 925670000, and Handle; 925680000).

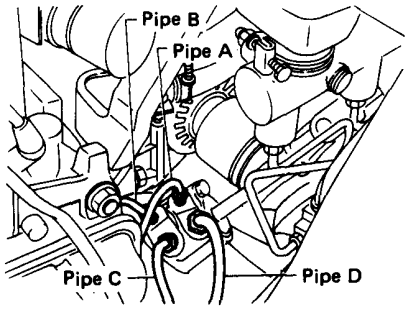

A18-184

Fig. 11-106

Torque (Flare nuts)	
Pipe A and B	16 – 20 N·m (1.6 – 2.0 kg-m, 12 – 14 ft-lb)
Pipe C	25 – 34 N·m (2.5 – 3.5 kg-m*, 18 – 25 ft-lb)
Pipe D	39 – 49 N·m (4.0 – 5.0 kg-m, 29 – 36 ft-lb)

* Recommended value for the flare nut at control valve.

4) Wind pipes A and B with clamp and tighten a bolt to fix both gearbox and the piping to crossmember.

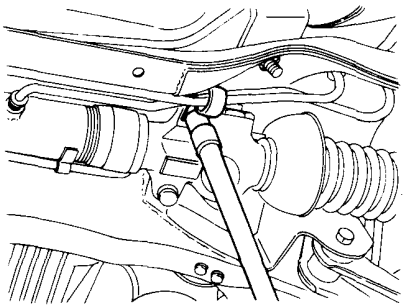

A18-352

Fig. 11-107 Tightening a bolt

Torque (Bolt)	44 – 54 N·m (4.5 – 5.5 kg-m, 33 – 40 ft-lb)

5) Install boot protector.

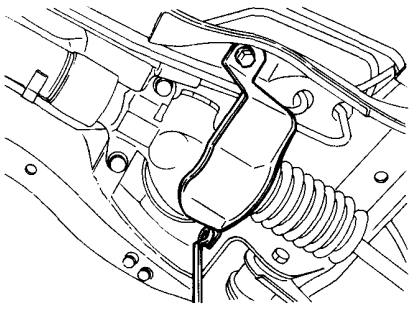

A18-354

Fig. 11-108

6) Install exhaust manifold, and connect cap of O_2 sensor.

Downloaded from www.Manualslib.com manuals search engine

Torque	
Nuts at engine	25 – 29 N·m (2.6 – 3.0 kg-m, 19 – 22 ft-lb)
Bolts and nuts at exhaust pipe	42 – 52 N·m (4.3 – 5.3 kg-m, 31 – 38 ft-lb)
Bolt at hanger	25 – 34 N·m (2.5 – 3.5 kg-m, 18 – 25 ft-lb)

7) Install steering joint assembly as follows.

1. Insert joint to steering shaft fully.
2. Push down yoke fully towards gearbox side.
3. Pull up joint after installing bolt through yoke, and confirm bolt to be aligned with notch on serration.
4. Tighten bolt for yoke and then tighten bolt for joint.

Torque	22 – 25 N·m (2.2 – 2.6 kg-m, 16 – 19 ft-lb)

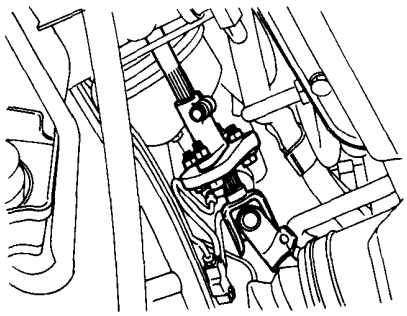

A18-153

Fig. 11-109

8) Connect tie-rod end to knuckle arm and tighten it by using castle nut.

Torque	25 – 29 N·m (2.5 – 3.0 kg-m, 18 – 22 ft-lb)

NOTE:

a. After tightening castle nut to the specified torque, tighten additionally in one-sixth (1/6) turn until both holes of bolt and castle nut align each other.
Then insert a new cotter pin and bend it around the castle nut.

b. Do not strike cap on bottom of tie-rod end with hammer or the like.

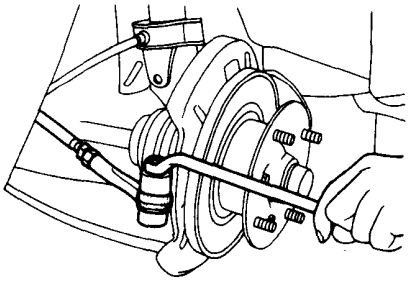

A15-078

Fig. 11-110 Connecting tie-rod end with knuckle arm

9) Install front wheels by tightening wheel nuts.

10) Connect minus terminal of battery, and fit spare tire.

11) Feed the specified fluid and discharge air. (For details, refer to the section regarding fluid line.)

NOTE:

Never start the engine before feeding the fluid; otherwise vane pump might be seized up.

12) Jack up vehicle again and take out safety stands, and then lower vehicle.

13) Check the fluid leakage at flare nuts after turning steering wheel from lock to lock with engine running.

14) Tighten bolts to fix both jack-up plate and clamps for piping.

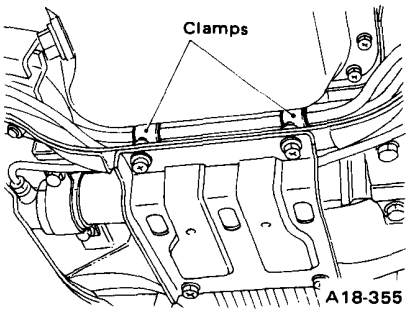

A18-355

Fig. 11-111

NOTE:

Make sure to hold piping properly by the clamps.

15) Adjust the fluid level in the reservoir. (For more details, refer to the section regarding fluid line.)

16) Tighten lock nuts of tie-rod ends after adjusting toe-in and turning angles.

Torque (Nuts)	78 – 88 N·m (8.0 – 9.0 kg-m, 58 – 65 ft-lb)

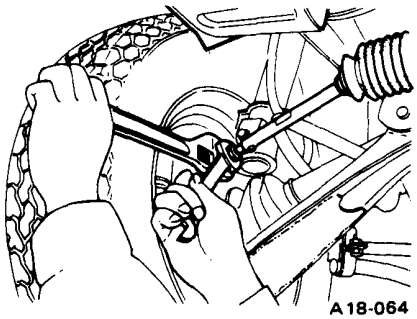

A18-064

Fig. 11-112

NOTE:

At adjusting toe-in, clasp boots to keep boots from rotating and twisting.

7. Adjustment

(See page 11–25.)

8. Measuring Axial Displacement of Ball Joint of Tie-rod Complete (On-car)

(See page 11–26.)

9. Replacement of Valve Assembly

NOTE:

a. Clean all debris, dirt and grease from around the steering gearbox prior to removal of the unit from the vehicle. Steam and/or a degreasing agent is suitable for this procedure.

b. Care must be taken to avoid getting any dirt into the gearbox ASSY when servicing. Clean all fittings carefully before removal.

Downloaded from www.Manualslib.com manuals search engine

1) Removal

Remove gearbox. (See page 11–28.)

2) Disassembly

1) Mount gearbox in Stand (Special tool 925690000). Secure Stand in a vise.

NOTE:
Never attempt to vise gearbox alone as this will damage the gearbox.

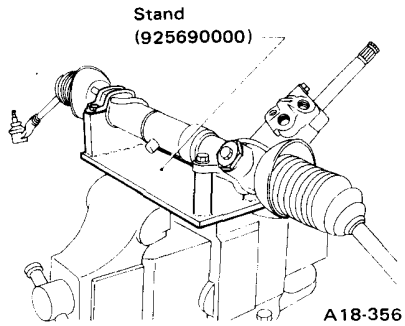

Fig. 11-113

2) Loosen locknut on gearbox adjusting screw. Unscrew adjusting screw completely.

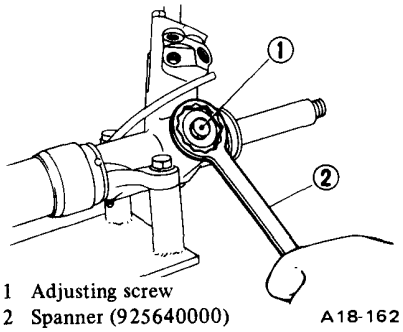

1 Adjusting screw
2 Spanner (925640000)

Fig. 11-114

3) Remove two bolts securing the valve ASSY.
4) Separate valve ASSY from gearbox by pulling input shaft and valve housing as a unit.

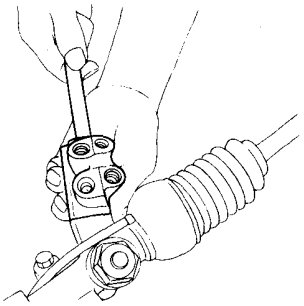

Fig. 11-115

5) Inspect needle bearing which is pressed in gearbox for wear or deformation. Replace as necessary.

3) Assembly

1) Prepare new ASSY for installation by cleaning rust preventive grease from pinion gear and bearing with clean kerosene or degreaser.

NOTE:
Do not allow the cleaner to enter the Valve ASSY.

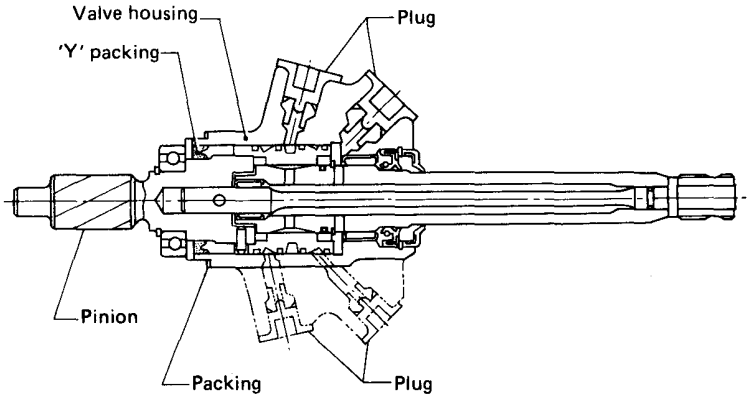

Fig. 11-116

2) Apply SUBARU genuine steering grease (VALIANT M2, P/N, 003608001) to ball bearing and pinion gear portion.
3) Set the rack to the extreme right hand turn position.
4) While holding pinion into valve housing, cut the shipping band.

NOTE:
a. Do not allow pinion to slip out of housing as this will damage "Y" packing.
b. Do not remove 4 plugs until gearbox has been reinstalled into vehicle.

5) Install a new gasket on the gearbox.
6) Insert valve ASSY into gearbox with the notch of input shaft facing the adjusting screw on gearbox.

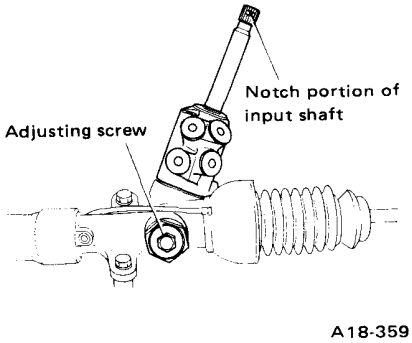

Fig. 11-117

7) Tighten two housing bolts in alternating sequence so as to draw the components together evenly without distortion.

Torque	20 – 29 N·m (2 – 3 kg-m, 14 – 22 ft-lb)

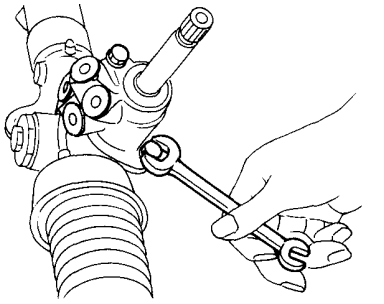

Fig. 11-118

Downloaded from www.Manualslib.com manuals search engine

8) Adjust the backlash of rack and pinion as follows:

a. Tighten adjusting screw until sleeve contacts rack [5 N·m (0.5 kg-m, 3.6 ft-lb) torque]. Back the adjuster out 1/2 turn.
b. Tighten adjusting screw until it gets tight. Back it out 30° (1/12 turn).
c. While holding the adjuster, tighten lock nut.

Torque	29 – 49 N·m (3 – 5 kg-m, 22 – 36 ft-lb)

9) Check the adjustment by turning the input shaft in both directions by hand. If excessive tightness, binding or looseness is felt, repeat the adjustment procedure.

4) Installation

As for the following service procedures and checkings, refer to the power steering section in this chapter.

a. Installation of gearbox.
b. Piping of fluid line.
c. Oil level.
d. Steering condition.
e. Fluid leakage.
f. Noise and vibration.
g. Clearance.
h. Measurement of steering effort.

NOTE:
It is recommended to recheck the above after several days.

11-8. Oil Pump (Power Steering System)

1. Construction

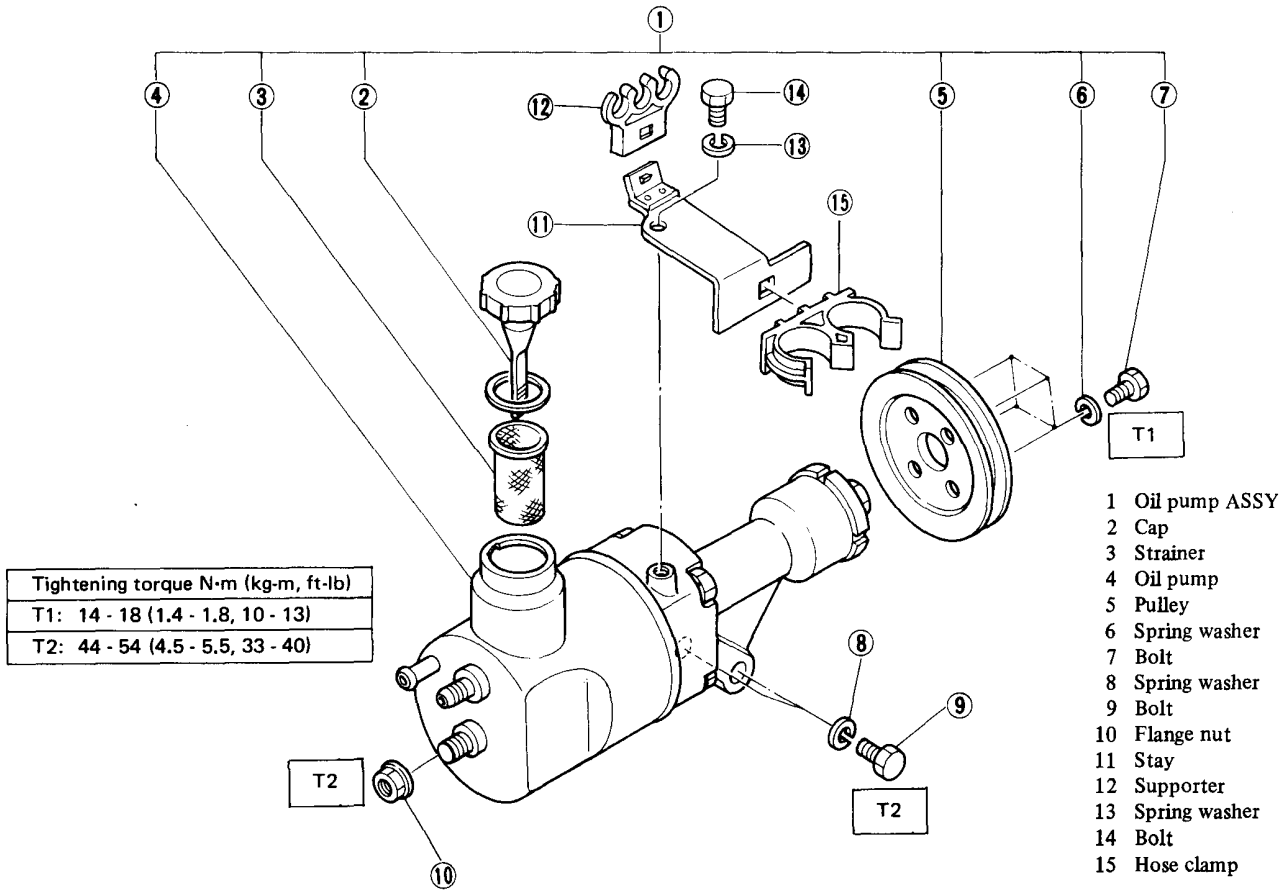

Fig. 11-119

A18-361

Downloaded from www.Manualslib.com manuals search engine

2. Removal

1) Remove ground cable from battery, and take out spare tire and carburetor shield.
2) Jack up vehicle and place safety stands under both of front lifting points.
3) Detach jack-up plate.
4) Drain the working fluid by removing flare nuts at center of power steering gearbox while turning steering wheel clockwise and counterclockwise.

NOTE:
a. When removing flare nuts, wrap waste cloth around flare nuts to prevent fluid from splashing.
b. After removing flare nuts, install vinyl tube onto gearbox for drainning fluid.

5) Pinch brim of idler cap by pliers with waste cloth around it, and take it out.

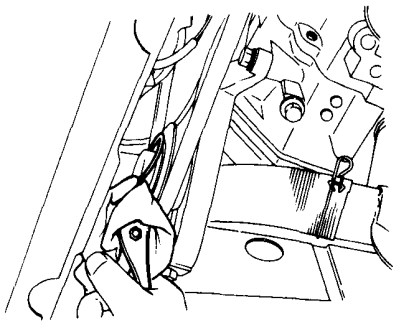

A18-187

Fig. 11-120

NOTE:
Do not pinch idler cap directly by pliers without cushioning waste cloth around it nor remove it by using a minus-head screwdriver; otherwise the cap might be damaged.

6) Loosen lock bolt by giving it about two (2) turns.
7) Turn adjust bolt counterclockwise, and take out oil pump belt.

NOTE:
After adjust bolt is loosened by turning counterclockwise, idler pulley will normally be slid upward by the tension of oil pump belt, and the belt will become ready for easy removal.

In case idler pulley fails to slide upward with adjust bolt loosened, loosen lock bolt by giving it about two more turns, and gently hit the head of adjust bolt by plastic hammer until the idler pulley slides.

8) Disconnect hoses from air cleaner and take out air cleaner by removing bolts.

NOTE:
After taking out air cleaner, seal carburetor to prevent dust and foreign matter from entering.

9) Take out electric wirings and hoses that extend beyond oil pump to permit the removal of oil pump ASSY.
10) Remove hoses at the back side of oil pump ASSY after taking out engine oil level gauge.

NOTE:
Wrap clean waste cloth or the like around the ends of hoses to keep dust or the like out.

11) Take out stay by removing its fixing bolt.
12) Remove bolts and a nut installing oil pump ASSY onto brackets, and take out oil pump ASSY.

NOTE:
Take care not to allow dust or the like to collect on the junction with hoses.

3. Disassembly and Assembly

1) To take out oil pump pulley, remove bolts fixing the pulley to oil pump ASSY in advance of removal of oil pump with belt tightened.

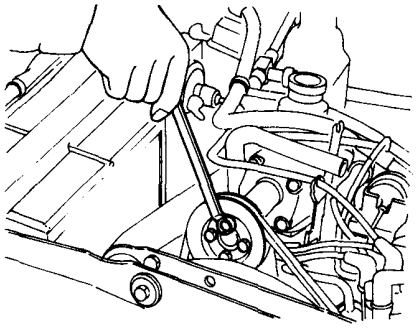

A18-192

Fig. 11-121

2) Take out pulley with belt slackened.
3) To fix pulley in position, tighten bolts halfway with belt slackened.
4) Adjust belt and then tighten bolts completely.

Torque (Bolts)	14 – 18 N·m (1.4 – 1.8 kg-m, 10 – 13 ft-lb)

NOTE:
In case pulley turns idly, the remedy required can be effected in either of two ways with two spanners or combination of a spanner and a screwdriver.

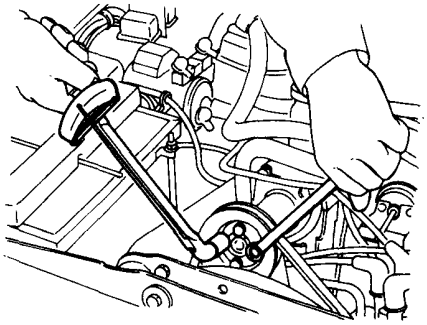

A18-193

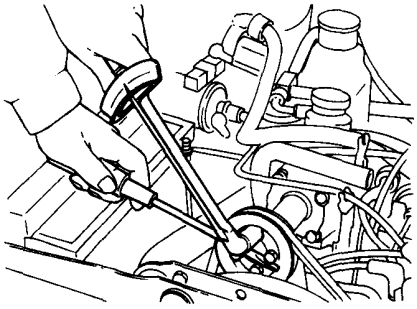

A18-194

Fig. 11-122

Downloaded from www.Manualslib.com manuals search engine

4. Inspection

- In accordance with the following table, inspect all removed parts for wear and damage, and make repair or replacement if necessary.

No.	Parts	Inspection	Corrective action
1	Oil pump (Outside)	(1) Crack, damage or oil leakage	Replace oil pump assembly with a new one.
		(2) Play of pulley shaft	Measure radial play and axial play. If any of these exceeds the service limit, replace oil pump assembly with a new one. (Refer to "Service limit".)
2	Pulley	(1) Damage	Replace it with a new one.
		(2) Bend	Measure V ditch deflection. If it exceeds the service limit, replace pulley with a new one. (Refer to "Service limit".)
3	Cap	Crack or damage	Replace it with a new one.
4	Strainer	(1) Clogging with dirt	Wash it.
		(2) Breakage	Replace it with a new one.
5	Oil pump (Interior)	(1) Defect or burning of vane pump	Check resistance to rotation of pulley. If it is past the service limit, replace oil pump assembly with a new one. (Refer to "Service limit".)
		(2) Bend in the shaft or damage to bearing	Oil pump emits a noise that is markedly different in tone and loudness from a sound of a new oil pump when turning with a string put around its pulley, replace oil pump assembly with a new one.
6	Stay	Deformation	Modify or replace it.
7	Supporter	Crack, deterioration or damage	Replace it with a new one.
8	Hose clamp	Crack, deterioration or damage	Replace it with a new one.

Downloaded from www.Manualslib.com manuals search engine

- **Service limit**

  Make a measurement as follows. If it exceeds the specified service limit, replace oil pump assembly with a new one.

NOTE:

a. Fix oil pump assembly on a vise to make a measurement. At this time, securely hold oil pump assembly between two wood pieces.

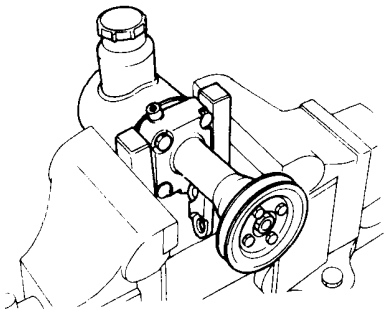

A18-195

Fig. 11-123

b. Do not set flange of reservoir or pulley on a vise; otherwise flange or pulley might be deformed. Select properly sized wood pieces.

Play of pulley shaft

Service limit	Radial play (Direction ⟷)	0.2 mm or less (0.008 in or less)
	Axial play (Direction ⟺)	0.3 mm or less (0.012 in or less)

(Radial play)

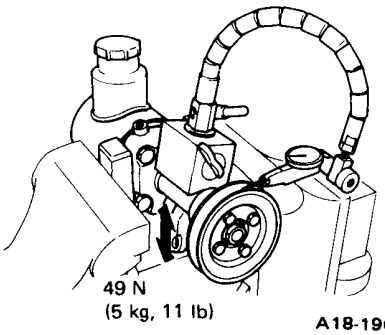

A18-196

Fig. 11-124

(Axial play)

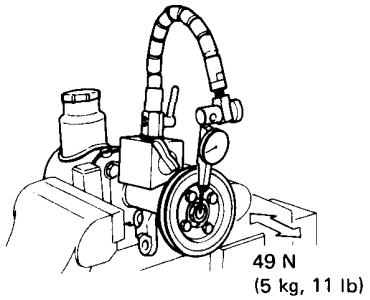

A18-197

Fig. 11-125

Ditch deflection of pulley

Service limit	1.0 mm or less (0.039 in or less)

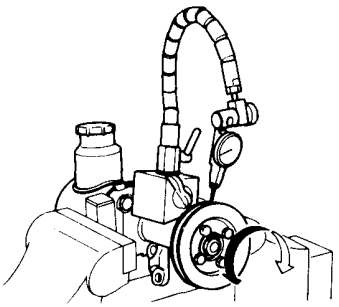

A18-198

Fig. 11-126

NOTE:

Read the value for one surface of V ditch, and then the value for another off the dial.

Resistance to rotation of pulley

Service limit	Maximum load; 9.22 N (0.94 kg, 2.07 lb) or less

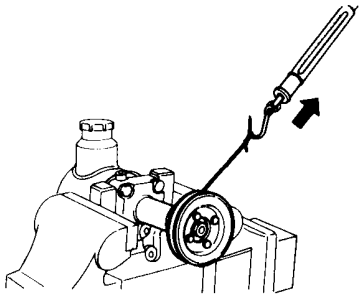

A18-199

Fig. 11-127

NOTE:

A rather higher value may be indicated when pulley starts turning.

Measure the load during rotation and make a judgement.

5. Installation

1) Fix oil pump assembly in position by tightening flange nut and bolts.

Torque (Nut and bolts)	44 – 54 N·m (4.5 – 5.5 kg-m, 33 – 40 ft-lb)

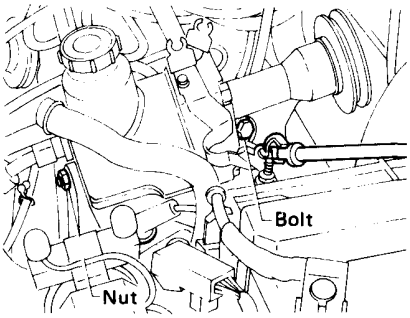

A18-191

Fig. 11-128

NOTE:

To tighten easily bolts at the front side, align the screw holes using flange nut tightened halfway at the rear end as a support.

2) Interconnect the hoses.

Torque	Clip	2 – 3 N·m (0.2 – 0.3 kg-m, 1.4 – 2.2 ft-lb)
	Joint nut	39 – 49 N·m (4.0 – 5.0 kg-m, 29 – 36 ft-lb)

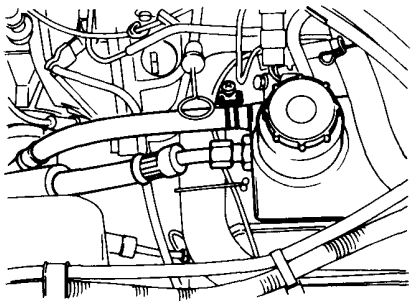

A18-189

Fig. 11-129

Downloaded from www.Manualslib.com manuals search engine

NOTE:
If a hose is twisted at this step, the hose may come into contact with some other parts.
(For more details, refer to the section regarding fluid line.)

3) Insert engine oil level gauge into its hole.
4) Install stay by tightening bolt.

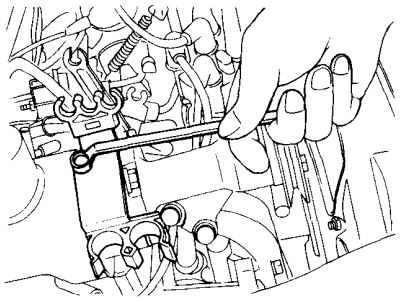

A18-362

Fig. 11-130

NOTE:
The side surface of stay and that of tank shell should contact with each other when installing.

5) Fix air cleaner in position.
6) Connect electric wirings and hoses to air cleaner and hold them by connectors or clips.
7) Set oil pump belt and adjust its tension, and then fit idler cap.

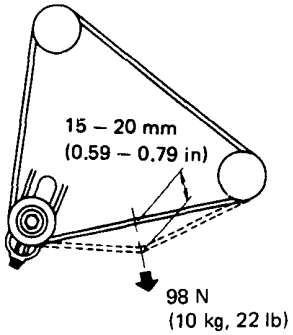

A18-200

Fig. 11-131

NOTE:
Make sure to fit idler cap properly by turning it.

8) Tighten flare nuts of piping to the specified torque.

Torque (Flare nuts)	16 – 20 N·m (1.6 – 2.0 kg-m, 12 – 14 ft-lb)

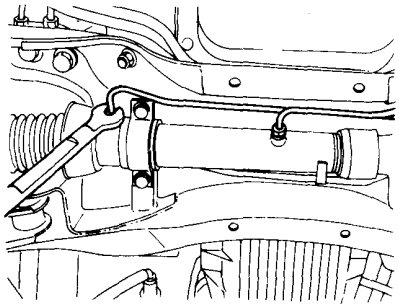

A18-151

Fig. 11-132

9) Connect minus terminal of battery, and fix spare tire and carburetor shield in position.
10) Feed the specified fluid and discharge air. (For details, refer to the section regarding fluid line.)

NOTE:
Never start the engine before feeding the fluid; otherwise vane pump might be seized up.

11) Jack up vehicle again and take out safety stands, and then lower vehicle.
12) Check the fluid leakage at flare nuts after turning steering wheel from lock to lock with engine running.
13) Tighten bolts to fix both jack-up plate and clamps for piping.

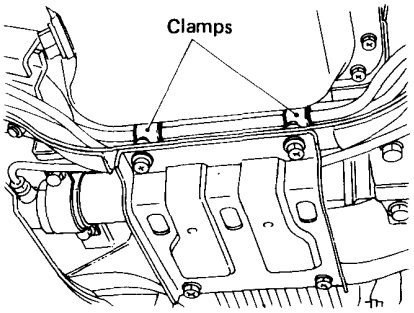

A18-355

Fig. 11-133

NOTE:
Make sure to hold piping properly by the clamps.

14) Adjust the fluid level in the reservoir. (For more details, refer to the section regarding fluid line.)

Downloaded from www.Manualslib.com manuals search engine

11-9. Belt Line (Power Steering System)

1. Construction

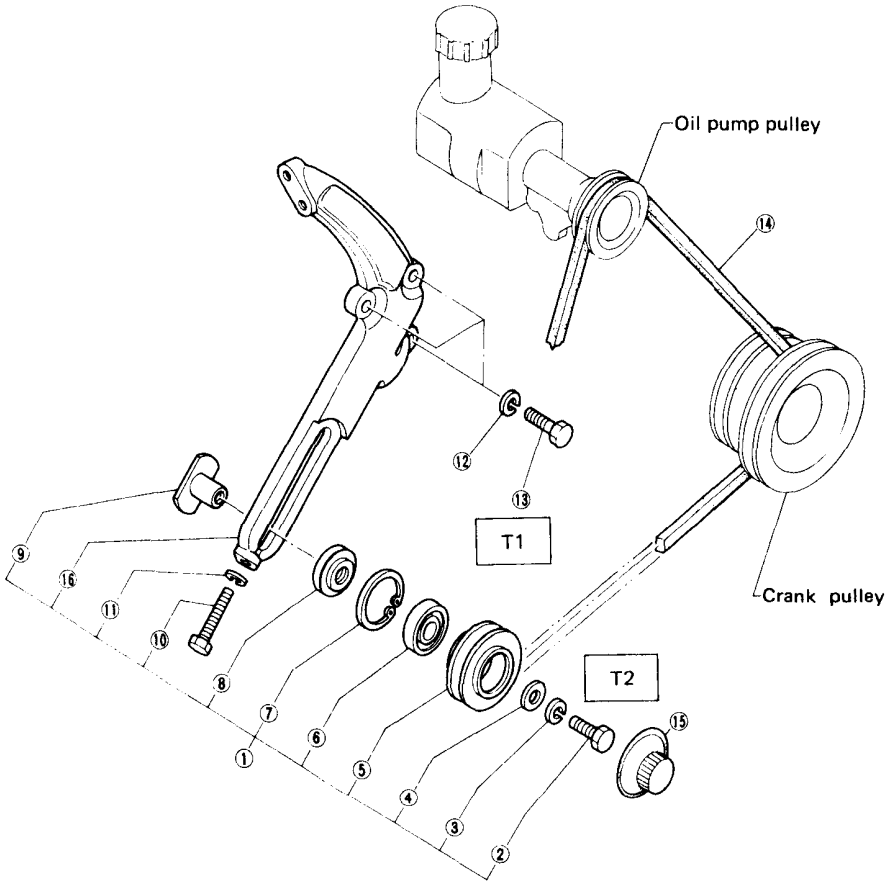

Tightening torque N·m (kg-m, ft-lb)
T1: 25 – 34 (2.5 – 3.5, 18 – 25)
T2: 20 – 29 (2 – 3, 14 – 22)

1 Front bracket assy
2 Lock bolt
3 Spring washer
4 Plain washer
5 Idler pulley
6 Ball bearing
7 Snap ring
8 Dust seal
9 Shaft
10 Adjust bolt
11 Spring washer
12 Spring washer
13 Bolt
14 V belt
15 Idler cap
16 Bracket

Fig. 11-134 A18-202

2. Removal

1) Pinch brim of idler cap by pliers with waste cloth around it, and take it out.

NOTE:
Do not pinch idler cap directly by pliers without cushioning waste cloth around it nor remove it by using a minus-head screwdriver; otherwise the cap might be damaged.

2) Loosen lock bolt by giving it about two (2) turns.

3) After taking out carburetor shield, turn adjust bolt counterclockwise, and take out oil pump belt.

NOTE:
After adjust bolt is loosened by turning counterclockwise, idler pulley will normally be slid upward by the tension of oil pump belt, and the belt will become ready for easy removal.

In case idler pulley fails to slide upward with adjust bolt loosened, loosen lock bolt by giving it about two more turns, and gently hit the head of adjust bolt by plastic hammer until the idler pulley slides.

4) Disconnect air duct and hose connecting to right-hand side rocker cover from air cleaner and remove bolts fixing air cleaner onto brackets and loose a wing nut onto carburetor.
5) Remove bolts for the front of oil pump assembly while lifting up air horn portion of air cleaner slightly.

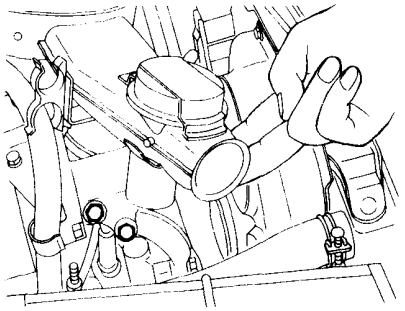

A18-203

Fig. 11-135

NOTE:
a. It is sufficient to lift air horn by about 25 mm (1 in). Lifting to an excessive extent would result in disconnection of pipes from air cleaner. In case they are disconnected, connect them properly.
b. Do not put an excessive load on oil pump assembly since it is supported by flange nut at rear end of it alone.

6) Take out bracket with idler pulley by removing bolts.

3. Disassembly

1) Remove adjust bolt and lock bolt of pulley.
2) Draw out pulley.

Downloaded from www.Manualslib.com manuals search engine

NOTE:

a. Usually, pulley can be dislodged by pressing it hard with hand. In case it cannot be dislodged, give lock bolt four to five turns again and gently hit the head of the bolt with a plastic hammer, and then remove lock bolt and pulley.

b. Do not force pulley out with a minus-head screwdriver inserted between pulley and bracket; otherwise damage might be caused to area of bracket into which the lip of dust seal comes into contact.

3) Draw out dust seal and shaft.

NOTE:

The shaft can normally be removed by pressing it hard with hand. If it cannot be easily removed, gently hit the end of shaft with a plastic hammer, and then shaft can be removed by pressing it hard again with hand.

4) Remove snap ring of pulley.

5) Remove ball bearing by using Remover (925720000) and press.

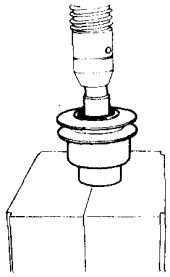

Fig. 11-136 A18-208

4. Inspection

- Inspect all removed parts for wear and damage, and replace them if necessary.

No.	Parts	Inspection	Corrective action
1	Bracket	(1) Crack or damage to thread portion	Replace it with a new one.
		(2) Deformation	Measure the deformation. If it is past service limit, replace bracket with a new one. (Refer to "Service limit".)
2	Idler cap	Crack, damage or deterioration	Replace it with a new one.
3	Idler pulley	(1) Damage	Replace it with a new one.
		(2) Deformation	Measure V ditch deflection. If it is past service limit, replace it with a new one. (Refer to "Service limit".)
4	Ball bearing	(1) Burn or damage	Replace ball bearing with a new one.
		(2) Broken rubber seal	
5	Dust seal	(1) Crack, damage or deterioration	Replace it with a new one.
		(2) Wear of the lip	Measure the diameter of the lip. If it is past service limit, replace dust seal with a new one. (Refer to "Service limit".)
6	Shaft	Damage to thread portion	Replace it with a new one.
7	Adjust bolt		
8	Lock bolt		

Downloaded from www.Manualslib.com manuals search engine

No.	Parts	Inspection	Corrective action
9	Belt	(1) Fraying, scale-off or crack	Replace it with a new one.
		(2) Wear of a side surface or carbonization	
		(3) Stretch	If belt is stretched to such an extent that it cannot be adjusted with idler pulley, replace belt with a new one.

- **Service limit**

Deformation of bracket

Service limit	A	32 ± 1.5 mm (1.26 ± 0.059 in)
	B & C	35 ± 2 mm (1.38 ± 0.08 in)
	D	95.25 ± 2 mm (3.7500 ± 0.08 in)

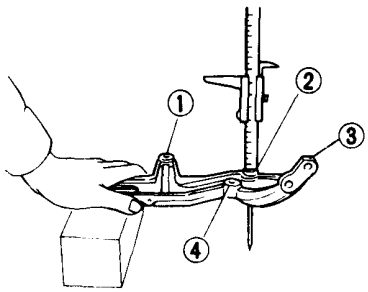

A18-209

1 Surface A
2 Surface B
3 Surface D
4 Surface C

Fig. 11-137

NOTE:

a. Bring the processed surface of bracket into contact with V block and hold bracket on it while measuring.

b. Measure the levels of surfaces from the top surface of V block.

Ditch deflection of pulley

Service limit	1.0 mm or less (0.039 in or less)

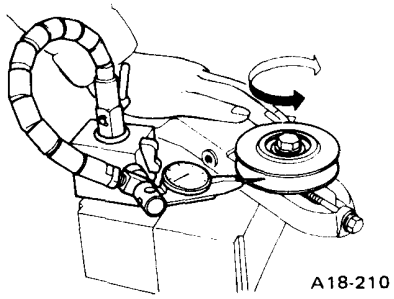

A18-210

Fig. 11-138

NOTE:

Read the value for one surface of V ditch and then the value for another off the dial.

Wear of dust seal

Service limit	A	47.6 – 48.3 mm (1.874 – 1.902 in)
	B	47.6 – 48.5 mm (1.874 – 1.909 in)
	C	19.3 – 19.8 mm (0.760 – 0.780 in)

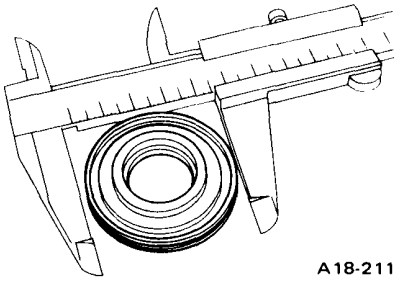

A18-211

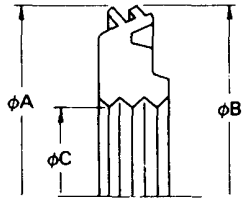

Fig. 11-139

A18-212

NOTE:

Measurement anywhere on the circumference should be within the appropriate range in the above table.

5. Assembly

1) Fit ball bearing in position by using Remover (925720000) and press.

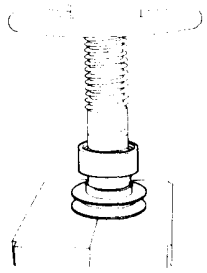

A18-213

Fig. 11-140

2) Fix snap ring in position.

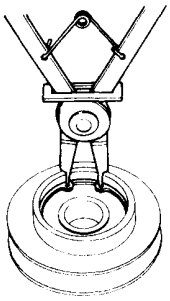

A18-207

Fig. 11-141

Downloaded from www.Manualslib.com manuals search engine

NOTE:
Turn snap ring to see if it is securely in position. If it fails to turn smoothly, ball bearing is not fully set in position.

3) Apply grease to both outer and inner circumferences of dust seal.
4) Fit dust seal to shaft together.
5) Apply grease to the inner circumference of pulley, and fix it in position.

NOTE:
a. Do not drive pulley in position with a hammer or the like; otherwise V ditch might be deformed.
b. Do not apply grease to any area near V ditch. Wipe away grease completely.

6) Tighten lock bolt halfway.

NOTE:
Completely wipe away surplus grease between bracket and pulley; otherwise grease will be splashed about possibly, with resultant slip of not only oil pump belt but also alternator belt.

7) Loosen lock bolt by giving it about two turns and give adjust bolt five to six turns to set it into shaft.

6. Installation

1) Tighten bolts for bracket and oil pump assembly halfway.
2) Tighten bolts for bracket properly.

Torque	25 – 34 N·m (2.5 – 3.5 kg-m, 18 – 25 ft-lb)

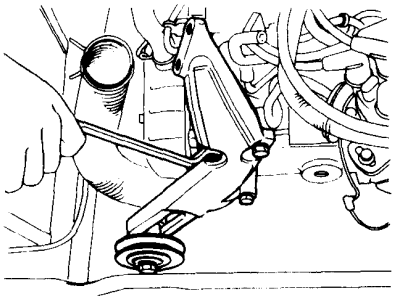

A18-204

Fig. 11-142

NOTE:
Do not tighten them excessively. Use of anything other than the bolts specially provided for the purpose will result in damage to cylinder head.

3) Tighten bolts and a nut for oil pump properly.

Torque	44 – 54 N·m (4.5 – 5.5 kg-m, 33 – 40 ft-lb)

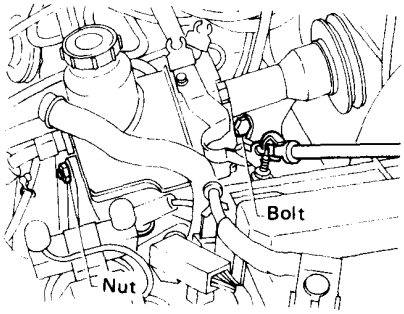

A18-191

Fig. 11-143

4) Tighten bolts and a wing nut for air cleaner, and connect duct and hose to it.
5) Set belt with hand in the sequence indicated below.
(1) Crank pulley
(2) Oil pump pulley
(3) Idler pulley
6) Adjust the belt tension by turning adjust bolt.

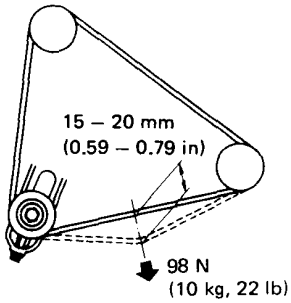

A18-200

Fig. 11-144

7) Tighten lock bolt.

Torque	20 – 29 N·m (2 – 3 kg-m, 14 – 22 ft-lb)

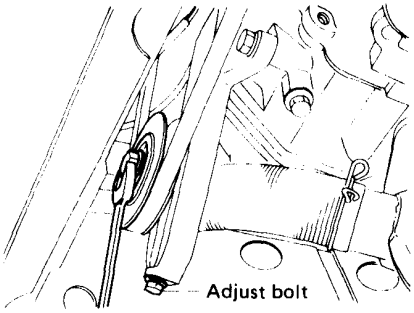

A18-188

Fig. 11-145

NOTE:
If spring washer for adjust bolt is not in close contact with the bolt, tighten adjust bolt until the washer comes into close contact with the bolt.

8) Fix idler cap in position.

NOTE:
a. Idler cap can be fixed easily in position if a thin grease coat is given to the contact areas of idler pulley and cap.
b. Turn the cap to see if it is securely in position.

9) Fit carburetor shield in position.
10) Confirm that idler cap is not removed and belt does not strike other parts while engine is running at idling speed.

NOTE:
At this time, do not run engine at speed more than 3000 rpm and for more than one minute; otherwise dust seal in idler pulley might have a short life due to overheating.

Downloaded from www.Manualslib.com manuals search engine

11-10. Fluid Line (Power Steering System)

1. Construction

- Hoses and piping

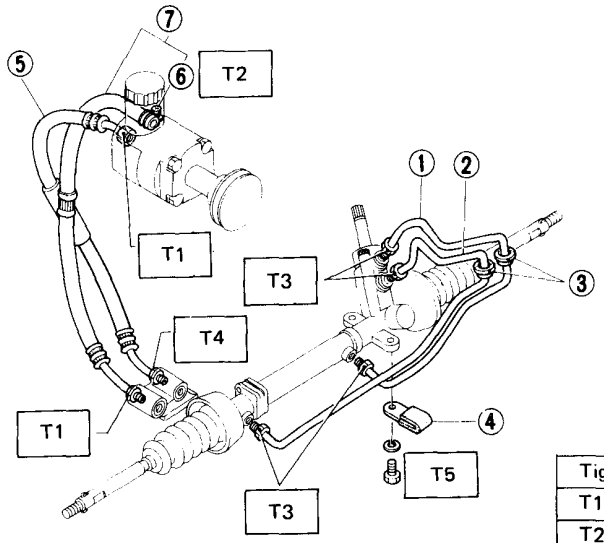

1 Pipe B
2 Pipe A
3 Grommet
4 Clamp A
5 Hose A
6 Hose clip
7 Hose B

Tightening torque N·m (kg-m, ft-lb)
T1: 39 - 49 (4 - 5, 29 - 36)
T2: 2 - 3 (0.2 - 0.3, 1.4 - 2.2)
T3: 16 - 20 (1.6 - 2.0, 12 - 14)
T4: 25 - 34 (2.5 - 3.5, 18 - 25)
T5: 44 - 54 (4.5 - 5.5, 33 - 40)

A18-363

Fig. 11-146

- Connector and piping

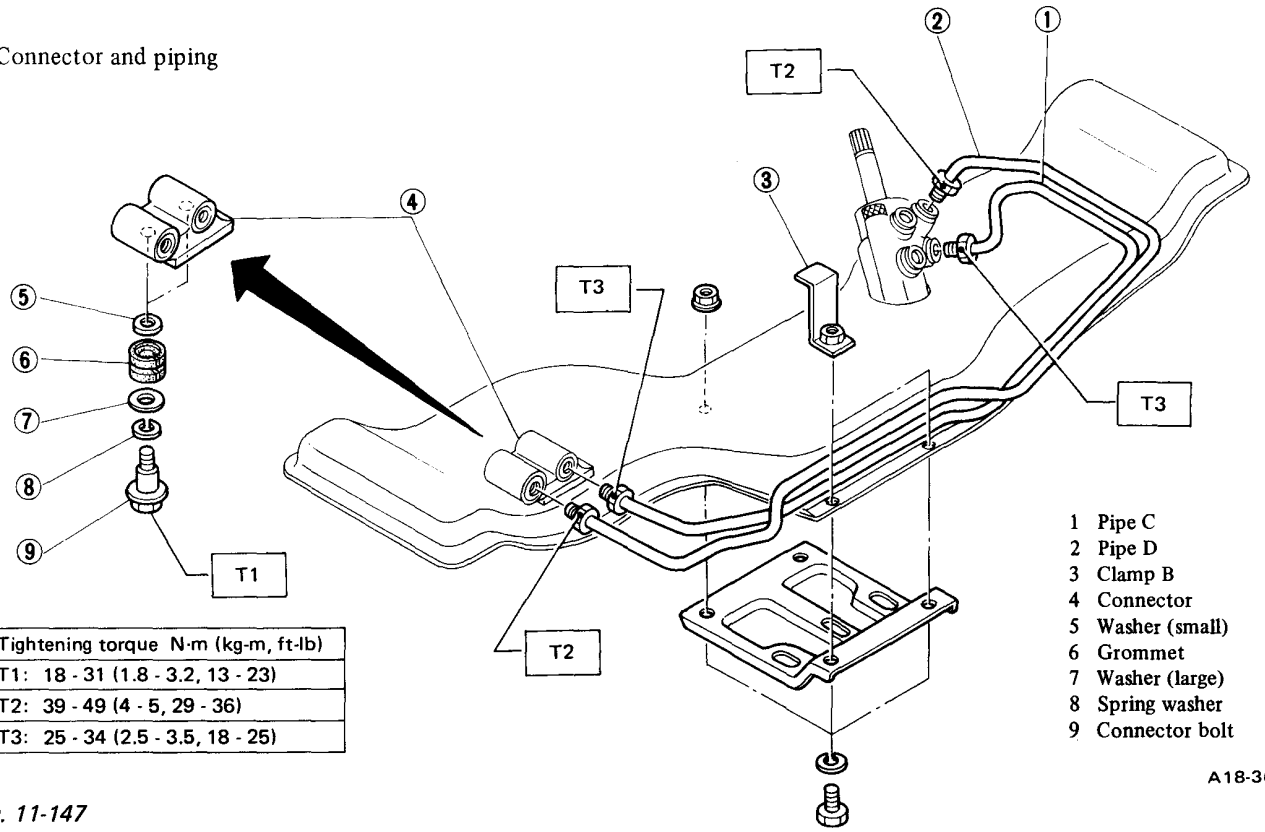

Tightening torque N·m (kg-m, ft-lb)
T1: 18 - 31 (1.8 - 3.2, 13 - 23)
T2: 39 - 49 (4 - 5, 29 - 36)
T3: 25 - 34 (2.5 - 3.5, 18 - 25)

1 Pipe C
2 Pipe D
3 Clamp B
4 Connector
5 Washer (small)
6 Grommet
7 Washer (large)
8 Spring washer
9 Connector bolt

A18-364

Fig. 11-147

Downloaded from www.Manualslib.com manuals search engine

2. Removal

1) Disconnect minus terminal of battery.
2) Jack up vehicle and place safety stands under both of front lifting points.
3) Take out jack-up plate by removing bolts.
4) After disconnecting cap of O_2 sensor, take out exhaust manifold by removing nuts and bolts fixing it with engine and body.
5) Remove boot protector.
6) After removing flare nuts at center of power steering gearbox, drain the working fluid while turning steering wheel clockwise and counter-clockwise.

NOTE:

a. When removing flare nuts, wrap waste cloth around flare nuts.
b. After removing flare nuts, install vinyl tubes onto gearbox and piping to prevent the fluid from splashing.

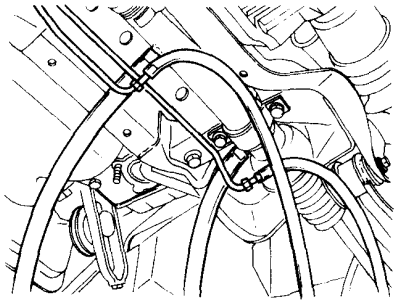

A18-152

Fig. 11-148

7) Remove flare nuts of control valve above crossmember.

NOTE:

a. Flare nuts can be easily removed if top one is removed first and the others are removed one by one in the downward sequence since the rotation angle of the wrench will be increased.
b. Remove a flare nut of which width across flats is 14 mm (0.55 in) by using Socket (925670000) and Handle (925680000).
c. Do not use wrench with its flats deformed; otherwise flare nuts are damaged.

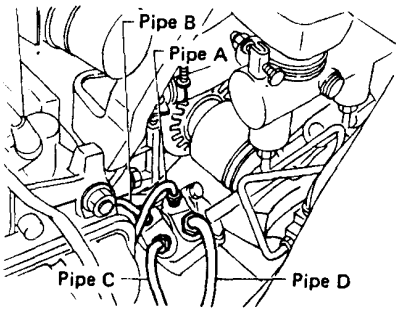

A18-184

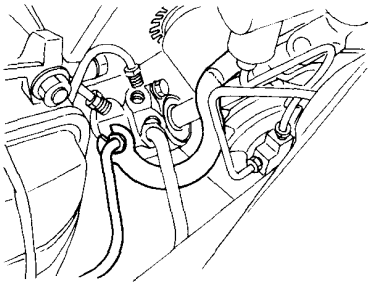

A18-154

Fig. 11-149

8) Remove a bolt to fix both piping and gearbox to crossmember.

9) Take out pipes from crossmember without bending them.

NOTE:

Pay attention to keep flare portions of pipes, flare nuts and couplings of gearbox clean from dirt or the like.

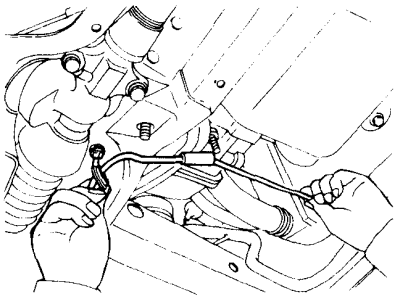

A18-216

Fig. 11-150

10) Loosen bolts fixing connector to crossmember, and slide the connector forward so easily as to remove flare nuts at the connector. Then tighten the bolts halfway.
11) Remove flare nuts at connector, and take out pipes without bending them.

NOTE:

Pay attention to keep flare portions of pipes, flare nuts and screw holes of connector clean from dirt or the like.

12) Remove nuts joined hoses to connector.
13) Take out connector by removing bolts.
14) Draw out grommets from each pipe.

Downloaded from www.Manualslib.com manuals search engine

3. Inspection

Inspect all removed parts for wear and damage, replace them if necessary.

No.	Parts	Inspection	Corrective action
1	Pipes	(1) Damage to flared surface (2) Damage to fare nut (3) Crush	Replace the pipe with a new one.
2	Connector	(1) Damage to tapered seat (2) Damage to internal thread	Replace the connector with a new one.
3	Grommet	Wear or deterioration	Replace it with a new one.
4	Clamp	(1) Scale-off of the coat (2) Deterioration of the hold on pipe	Replace the clamp with a new one.
5	Hoses	(1) Damage to flared surface (2) Damage to flare nut (3) Crack on hose surface (4) Swollen hose (5) Wear of hose surface	Replace the hose with a new one.
		(6) Damage to hose clip	Replace it with a new one.

4. Installation

1) Set grommets for each pipe in position so that the large-diameter side will be outside crossmember.
2) Set grommets for connector and fix the connector in position by tightening bolts.

Torque (Bolts)	18 – 31 N·m (1.8 – 3.2 kg-m, 13 – 23 ft-lb)

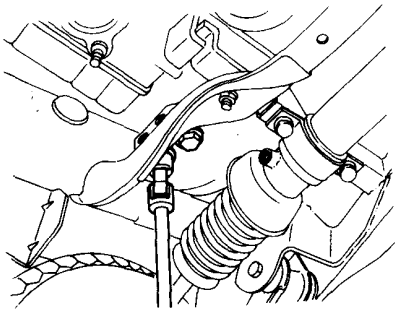

A18-220

Fig. 11-151

NOTE:
Set grommets for connector in position that the side with a step will be outside crossmember.

3) Set and fix pipes in the specified positions between control valve and gearbox or connector by tightening flare nuts as following order.

Torque (Flare nuts)	
For pipe A and B	16 – 20 N·m (1.6 – 2.0 kg-m, 12 – 14 ft-lb)
For pipe C	25 – 34 N·m (2.5 – 3.5 kg-m*, 18 – 25 ft-lb)
For pipe D	39 – 49 N·m (4.0 – 5.0 kg-m, 29 – 36 ft-lb)

* Recommended value for the flare nut at control valve.

(1) Pipe A to control valve and gearbox
(2) Pipe B to control valve
(3) Pipe C to control valve and connector
(4) Pipe D to control valve and connector
(5) Pipe B to gearbox

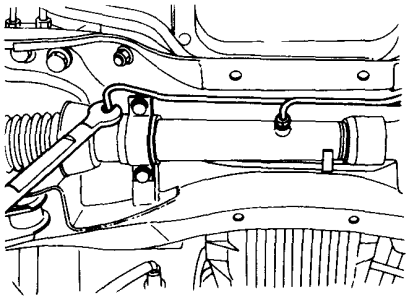

A18-151

Downloaded from www.Manualslib.com manuals search engine

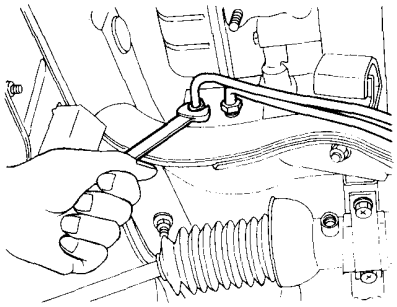

A18-365

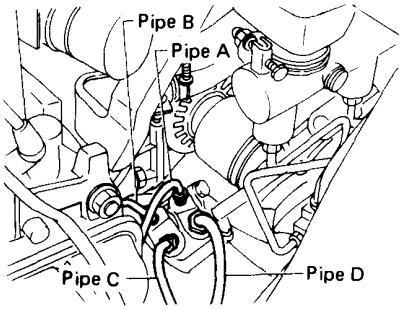

A18-184

Fig. 11-152

NOTE:
Fix pipe C to control valve by tightening a flare nut with Socket (925670000) and Handle (925680000).

4) Fix hose A to connector and oil pump by tightening flare nuts to the specified torques.

Torque (Flare nut)	At oil pump	39 – 49 N·m (4.0 – 5.0 kg-m, 29 – 36 ft-lb)
	At connector	25 – 34 N·m (2.5 – 3.5 kg-m, 18 – 25 ft-lb)

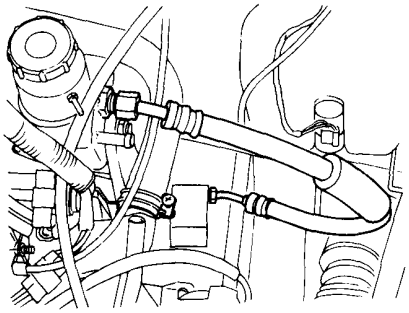

A18-221

Fig. 11-153

NOTE:
a. Tighten a flare nut at connector prior to one at oil pump so as to keep the hose at a right angle with crossmember as well as hose B.
b. Tighten flare nuts to prevent a hose from twisting as well as hose B.
c. Keep the hose apart from washer tank by 15 mm (0.59 in) or more.

5) Fix hose B to connector and oil pump.

Torque	Flare nut at connector	39 – 49 N·m (4.0 – 5.0 kg-m, 29 – 36 ft-lb)
	Clip at oil pump	2 – 3 N·m (0.2 – 0.3 kg-m, 1.4 – 2.2 ft-lb)

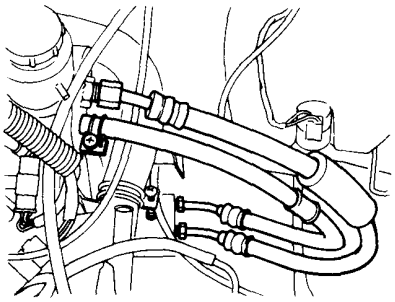

A3-199

Fig. 11-154

NOTE:
Set hose B inside of hose A as shown in the above illustration.

6) Set clamp to piping and tighten a bolt to fix gearbox and the clamp to crossmember.

Torque (Bolt)	44 – 54 N·m (4.5 – 5.5 kg-m, 33 – 40 ft-lb)

NOTE:
a. Set clamp so as to see a marking "LH" on it.
b. Make sure to hold piping properly by the clamp.

7) Install boot protector.
8) Fix exhaust manifold in position by tightening nuts and bolts to the specified torques, and connect cap of O_2 sensor.

Torque	
Nuts at engine	25 – 29 N·m (2.6 – 3.0 kg-m, 19 – 22 ft-lb)
Bolts and nuts at exhaust pipe	42 – 52 N·m (4.3 – 5.3 kg-m, 31 – 38 ft-lb)
Bolt at hanger	25 – 34 N·m (2.5 – 3.5 kg-m, 18 – 25 ft-lb)

9) Connect minus terminal of battery.
10) Feed the specified fluid and discharge air as follows.

Recommended fluid (ATF Dexron)	
B.P.	B.P. Autran DX
CALTEX	Texamatic fluid 6673 Dexron
CASTROL	CASTROL TQ Dexron
MOBIL	MOBIL ATF 220
SHELL	SHELL ATF Dexron
TEXACO	Texamatic fluid 6673 Dexron

(1) Feed the specified fluid with its level being about 5 to 6 cm (2.0 to 2.4 in) lower than the mouth of tank.
(2) Continue to turn steering wheel slowly from lock to lock until bubbles stop appearing in the tank while keeping the fluid at that level.

NOTE:
In case air is absorbed to deliver bubbles into piping because the fluid level is lower, leave it about half an hour and then do the step (2) all over again.

(3) Start, and idle the engine.
(4) Continue to turn steering wheel slowly from lock to lock again until bubbles stop appearing in the tank while keeping the fluid at that level.

Downloaded from www.Manualslib.com manuals search engine

It is normal that bubbles stop appearing after three times turning of steering wheel.

NOTE:
In case bubbles do not stop appearing in the tank, leave it about half an hour and then do the step (4) all over again.

(5) Stop the engine, and take out safety stands after jacking up vehicle again.
Then lower the vehicle, and idle the engine.

(6) Continue to turn steering wheel from lock to lock until bubbles stop appearing and change of the fluid level is within 3 mm (0.12 in).

NOTE:
In case the following happens, leave it about half an hour and then do step (6) again.

a. The fluid level changes over 3 mm (0.12 in).
b. Bubbles remain on the upper surface of the fluid.
c. Grinding noise is generated from oil pump.

11) Check the fluid leakage at flare nuts after turning steering wheel from lock to lock with engine running.

NOTE:
a. Before checking, wipe off any fluid on flare nuts and piping.
b. In case the fluid leaks from flare nut, it is caused by dust (or the like) and/or damage between flare and tapered seat in piping.
So remove the flare nut, tighten again it to the specified torque after cleaning flare and tapered seat. If flare or tapered seat is damaged, replace it with a new one.

12) Install jack-up plate and clamps by tightening bolts.

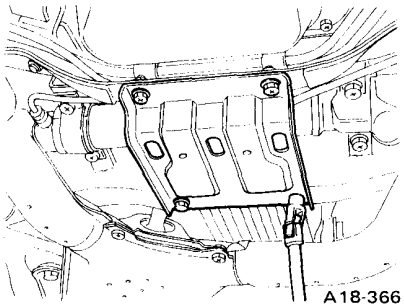

Fig. 11-155

NOTE:
Make sure to hold piping properly after installing clamps.

13) Inspect fluid level on flat and level surface with engine "OFF" by indicator of filler cap.

If the level is at lower point or below, add fluid to keep the level in the specified range of the indicator. If at upper point or above, drain fluid by using a syringe or the like.

Fluid capacity
0.8 liter (0.8 US qt, 0.7 Imp qt)

(1) Check at temperature 21°C (70°F) on reservoir surface of oil pump

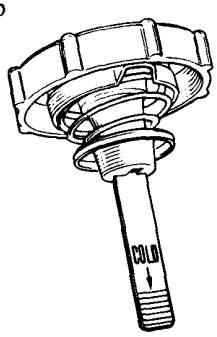

Fig. 11-156 Indicator of filler cap

(2) Check at temperature 60°C (140°F) on reservoir surface of oil pump

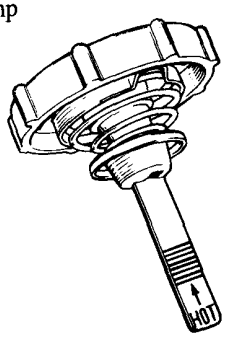

Fig. 11-157 Indicator of filler cap

11-11. Troubleshooting

1. Manual Steering

Trouble and possible cause	Corrective action
1. Steering wheel operation is heavy Jack up and when the left and right front wheels are clear the ground, remove the tie-rod ends from the housings and operate the steering wheel. A) When easy — Tire pressure and suspension B) When heavy — Steering system trouble When heavy, separate the gearbox from steering shaft at the universal joint and operate the steering wheel. A) When easy — Trouble in connection with gearbox B) When heavy — Trouble in connection with steering shaft	

Downloaded from www.Manualslib.com manuals search engine

Trouble and possible cause	Corrective action
1) Tire pressure too low	Adjust to normal pressure
2) Improper front wheel alignment	Adjust toe-in
3) Stuck ball joint	Replace
4) Insufficient lubrication	Lubricate all parts
5) Too much tightening of adjusting spring	Adjust
6) Worn tires	Replace
7) No smooth operation of universal joint	Replace
2. Steering wheel vibration This condition is manifest mostly at high speeds, on rough road or when play of the steering wheel exists.	
1) Improper tire pressure	Adjust to normal pressure
2) Incorrect front wheel alignment	Adjust toe-in
3) Unbalanced wheels and tires	Correct
4) Loosened wheel nuts	Tighten to correct torque
5) Distorted wheel	Correct or replace
6) Damaged or worn wheel bearing	Repair or replace
7) Worn ball joint	Replace
8) Damaged suspension mounting	Inspect, and correct or replace
3. The steering wheel pulls to one side This is a very dangerous vehicle condition, often attributable to abnormality in the front suspension system.	
1) Unbalanced tire pressure	Adjust to correct pressure
2) Incorrect front wheel alignment	Correct
3) Worn or incorrectly adjusted wheel bearing	Adjust or replace
4) Insufficient operation of shock absorber	Replace
5) Damaged suspension or improper installing	Inspect, correct or replace
6) Warped crossmember	Replace
7) Unequal left and right wheel base	Correct
8) Special character of tire	Rotate or Replace
4. Shock felt at the steering wheel	
1) Incorrect front wheel alignment	Adjust toe-in
2) Tire pressure too high	Adjust to normal pressure
5. Steering wheel free play more over 25 mm (1 in) Set the steering wheel in straight ahead and when turning the wheel to both left and right, the distance along the circumference should be less than 25 mm (1 in) until the front wheels begin to turn.	
1) Worn rack and pinion	Replace
2) Worn or damaged serration of steering shaft and torque rod	Tighten additionally or replace
3) Loose tightening of steering wheel installing nut	Tighten to specified torque
4) Loose universal joint bolt	Tighten to specified torque
5) Looseness on universal joint	Replace
6) Worn front wheel bearing	Adjust or replace
7) Loose connections and insufficient tightening	Tighten to specified torque or replace

Downloaded from www.Manualslib.com manuals search engine

2. Power Steering

1) Steering condition

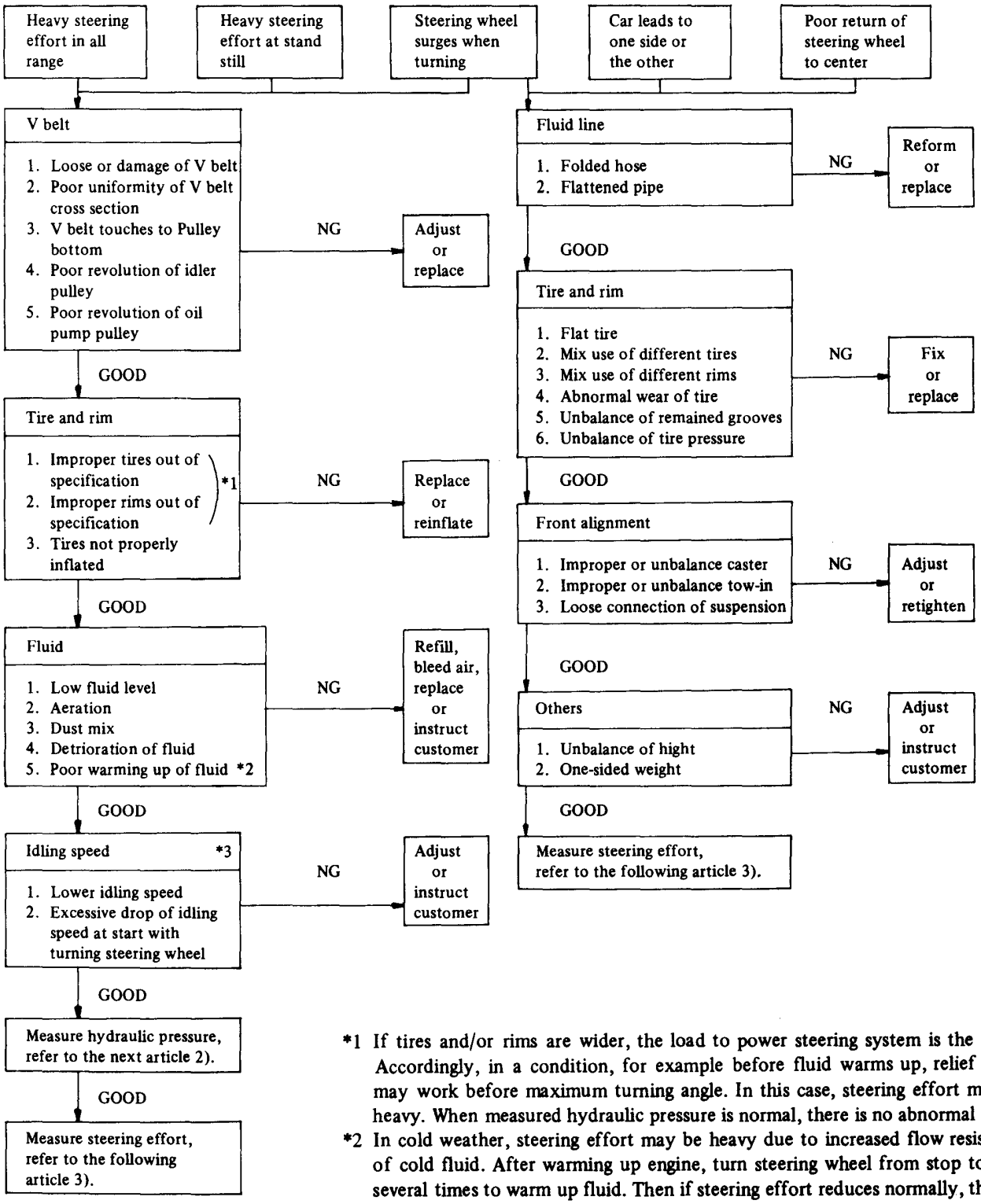

*1 If tires and/or rims are wider, the load to power steering system is the more. Accordingly, in a condition, for example before fluid warms up, relief valve may work before maximum turning angle. In this case, steering effort may be heavy. When measured hydraulic pressure is normal, there is no abnormal thing.

*2 In cold weather, steering effort may be heavy due to increased flow resistance of cold fluid. After warming up engine, turn steering wheel from stop to stop several times to warm up fluid. Then if steering effort reduces normally, there is no abnormal thing.

*3 In cold weather or with insufficient warm up of engine, steering effort may be heavy due to excessive drop of idling speed when turning steering wheel. In this case, it is recommended to start the car with increasing engine speed than usual. Then if steering effort reduces normally, there is no abnormal thing.

Downloaded from www.Manualslib.com manuals search engine

2) Measurement of hydraulic pressure

Note: Be sure to complete all items aforementioned in article 1), prior to measuring hydraulic pressure. Otherwise, pressure can not be measured correctly.

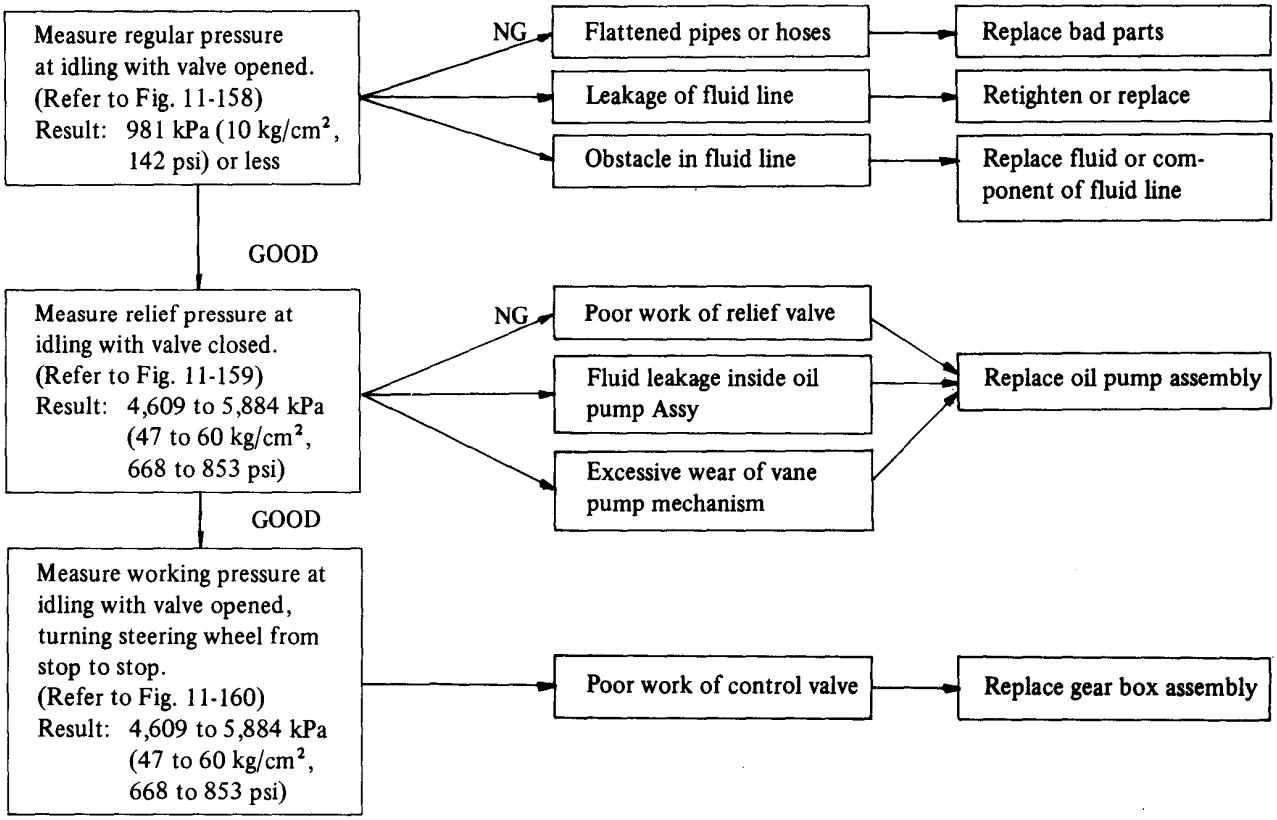

NOTE:

a. Do not leave the valve of pressure gauge closed or hold the steering wheel at stop end for 5 seconds or more in any case, as the oil pump may be damaged due to long keep of these conditions.

b. Put cotton cloth waste at a place where fluid drops before pressure gauge is installed. Wipe off spilt fluid thoroughly after the measurement.

c. Keep engine idling during the measurement.

Regular pressure	981 kPa (10 kg/cm², 142 psi) or less

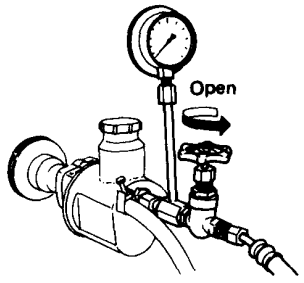

A18-223

Fig. 11-158

Relief pressure	4,609 – 5,884 kPa (47 – 60 kg/cm², 668 – 853 psi)

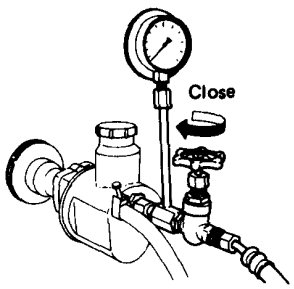

A18-224

Fig. 11-159

Working pressure	4,609 – 5,884 kPa (47 – 60 kg/cm², 668 – 853 psi)

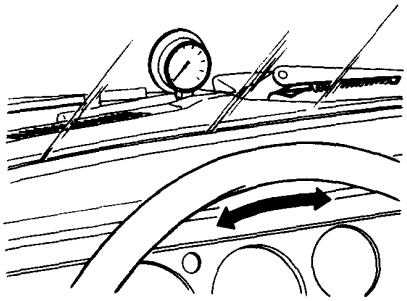

A18-225

Fig. 11-160

Downloaded from www.Manualslib.com manuals search engine

3) Measurement of steering effort.

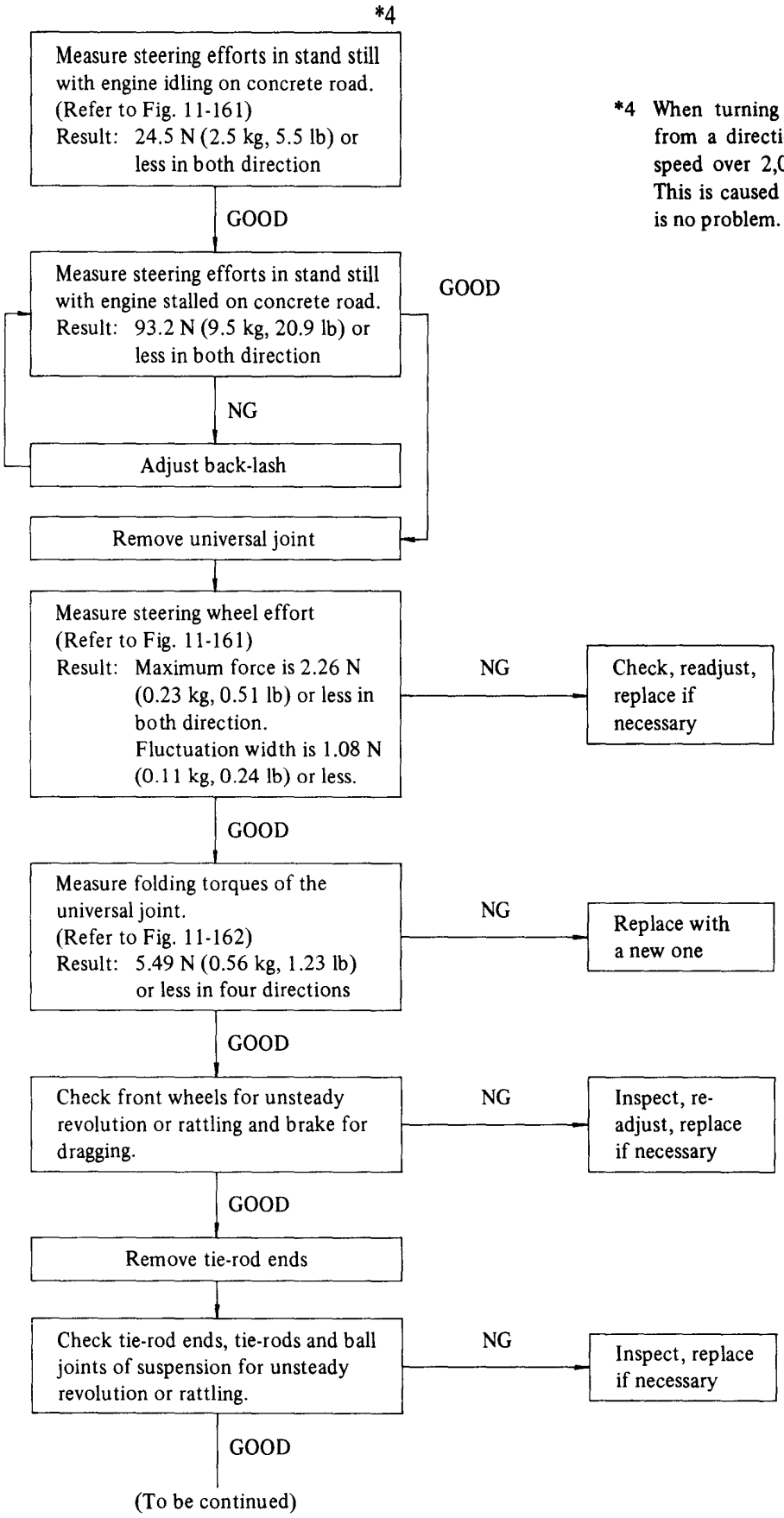

*4 When turning steering more quickly than necessary from a direction to the other direction at an engine speed over 2,000 rpm, steering effort may be heavy. This is caused by flow characteristic of oil pump and is no problem.

Downloaded from www.Manualslib.com manuals search engine

Measure rotating and sliding resistance of gearbox ASSY. (Refer to Fig. 11-163 and Fig. 11-164) Result: Rotating resistance is 6.18 N (0.63 kg, 1.39 lb) or less around center position and 8.43 N (0.86 kg, 1.90 lb) or less in all position within 20% differency between clockwise and couter-clockwise. Sliding resistance is 245 N (25 kg, 55 lb) or less with 20% differency between left and right directions.	NG →	Readjust back-lash, if inef-fective replace gearbox ASSY

Steering effort	24.5 N (2.5 kg, 5.5 lb) or less

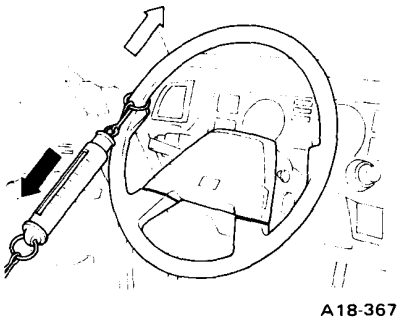

Fig. 11-161

Rotating resistance	
Straight-ahead position within 30 mm (1.18 in) from rack center	Less than 6.18 N (0.63 kg, 1.39 lb)
Maximum allowable torque	8.43 N (0.86 kg, 1.90 lb)

Sliding resistance	
Right-turn steering	245 N (25 kg, 55 lb) or less
Left-turn steering	

Folding torques of universal joint in four directions	5.49 N (0.56 kg, 1.23 lb) or less

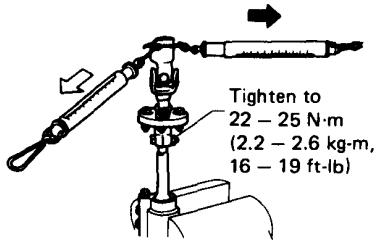

Fig. 11-162

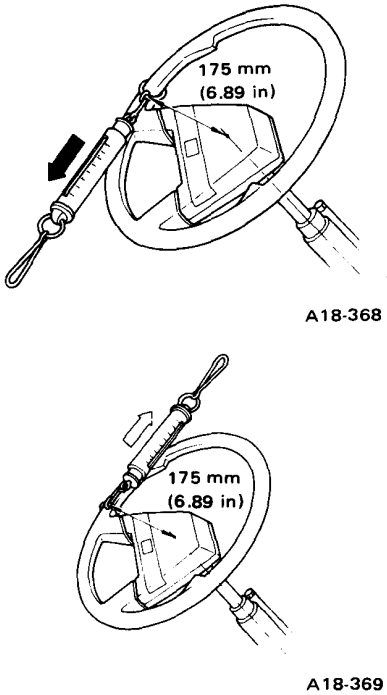

Fig. 11-163

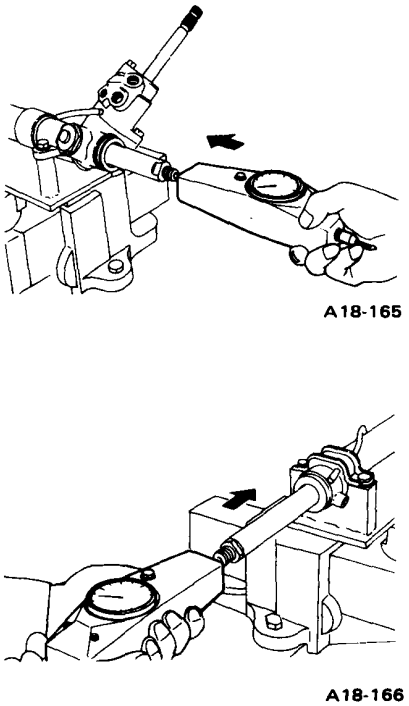

Fig. 11-164

Downloaded from www.Manualslib.com manuals search engine

4) Fluid leakage

Note: It is likely that although one judges fluid leakage, there is actually no leakage. This is because the fluid spilt during the last maintenance was not completely wiped off. Be sure to wipe off spilt fluid thoroughly after maintenance.

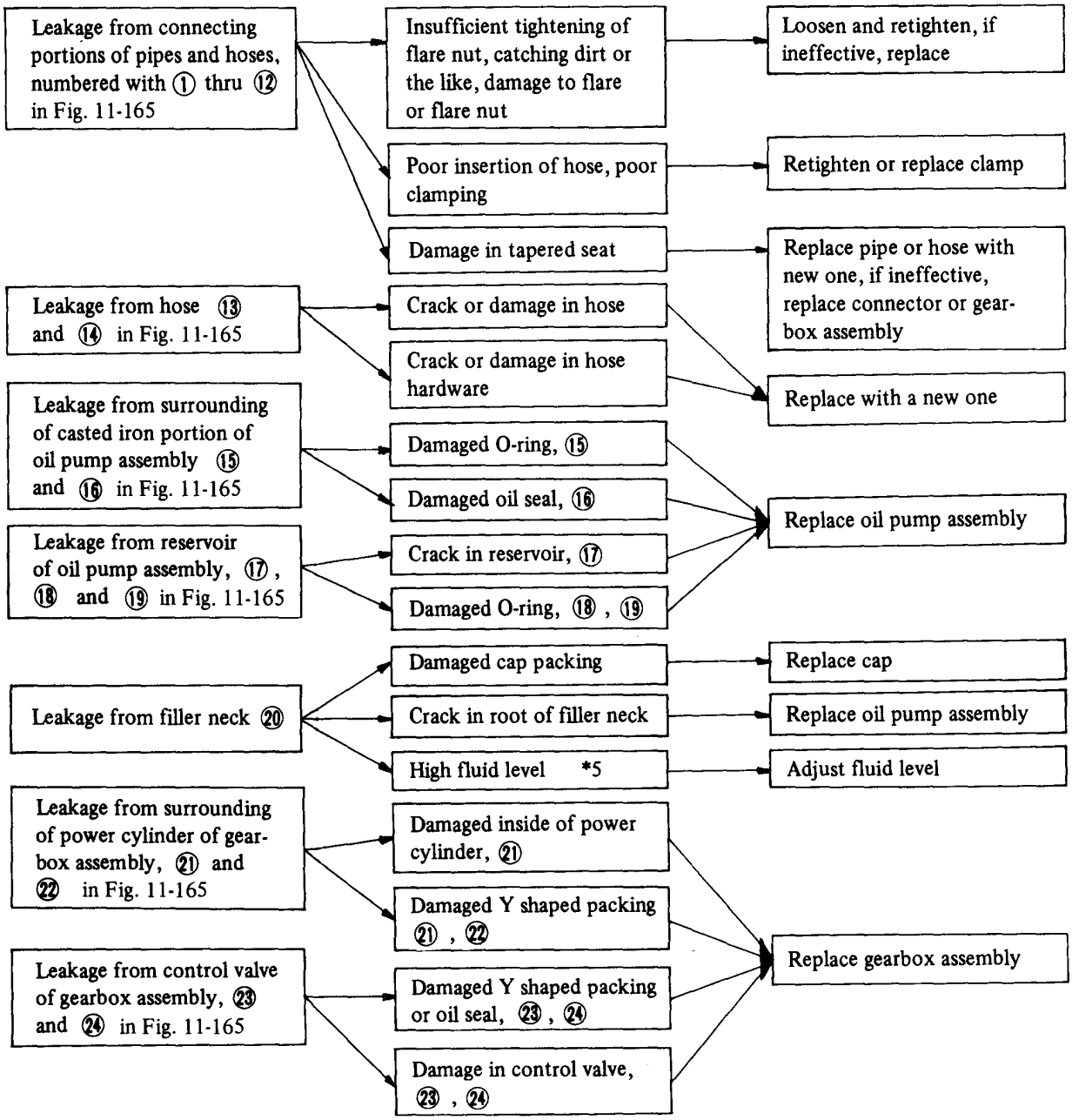

*5 Fluid level is specified at optimum position (range) for ordinary use. Accordingly when the car is used in many times in hard conditions like as very rough road or mountain area, fluid may bleed out from air vent hole of cap. This is not a problem.
If a customer complains strongly and he is not likely to satisfy for this phenomena, lower the fluid level so extent that fluid does not bleed out at the above conditions and lead him to perform checking of fluid level and fluid deterioration more frequently.

Downloaded from www.Manualslib.com manuals search engine

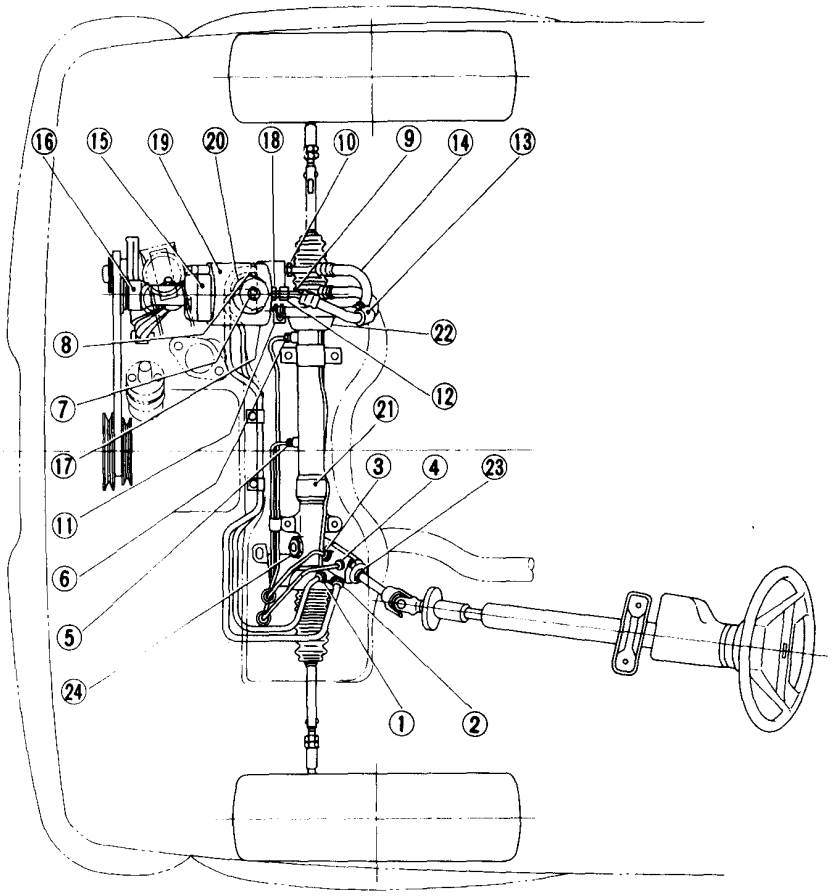

A18-370

Fig. 11-165

Downloaded from www.Manualslib.com manuals search engine

5) Noise and vibration

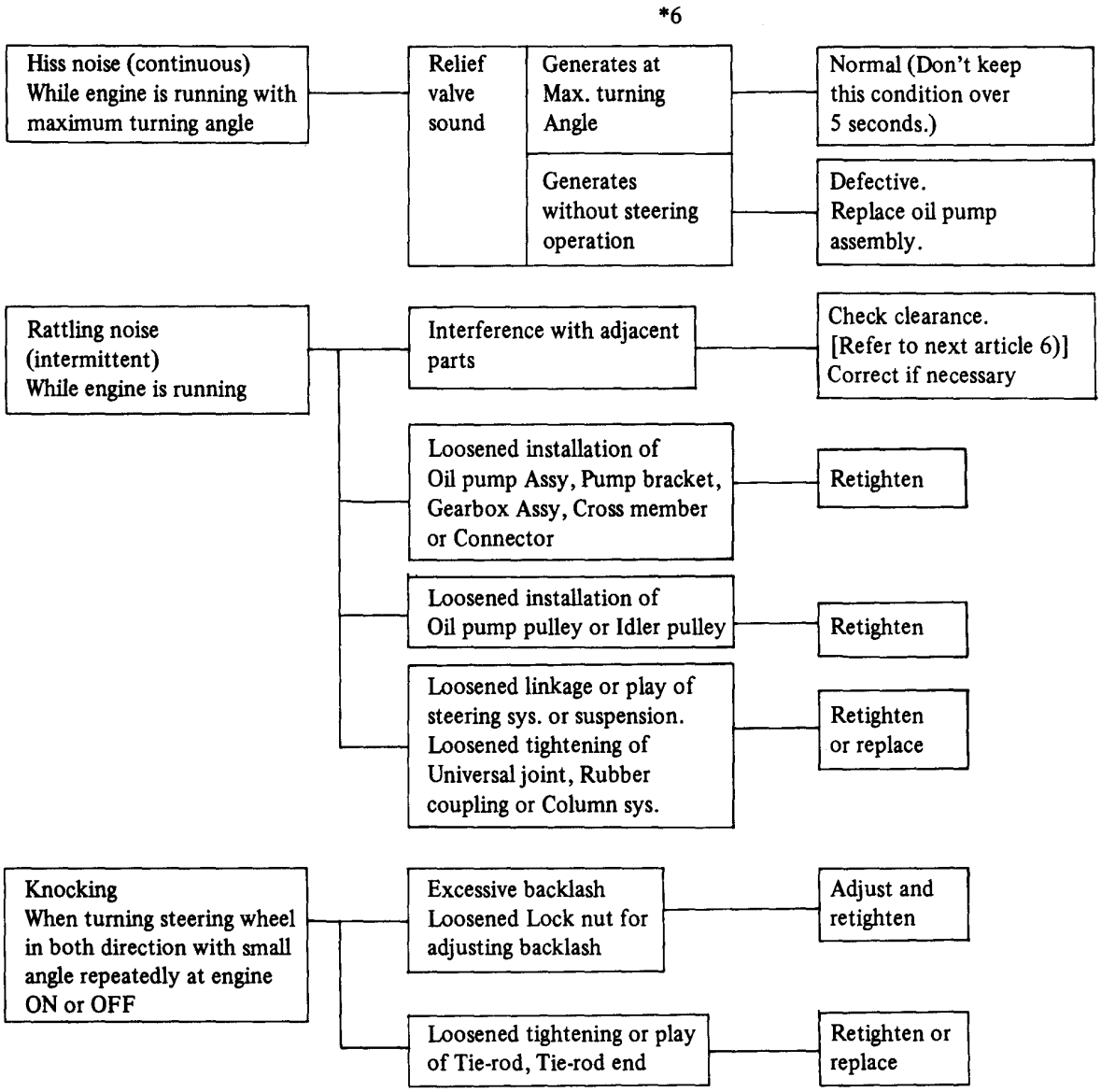

*6 Don't keep the relief valve operated over 5 sec. at any time or inner parts of the oil pump may be damaged due to rapid increase of fluid temperature.

*7 Grinding noise may be heard immediately after the engine start in extremely cold condition.
In this case, if the noise goes off during warm up there is no abnormal function in the system.
This is due to the fluid characteristic in extremely cold condition.

Downloaded from www.Manualslib.com manuals search engine

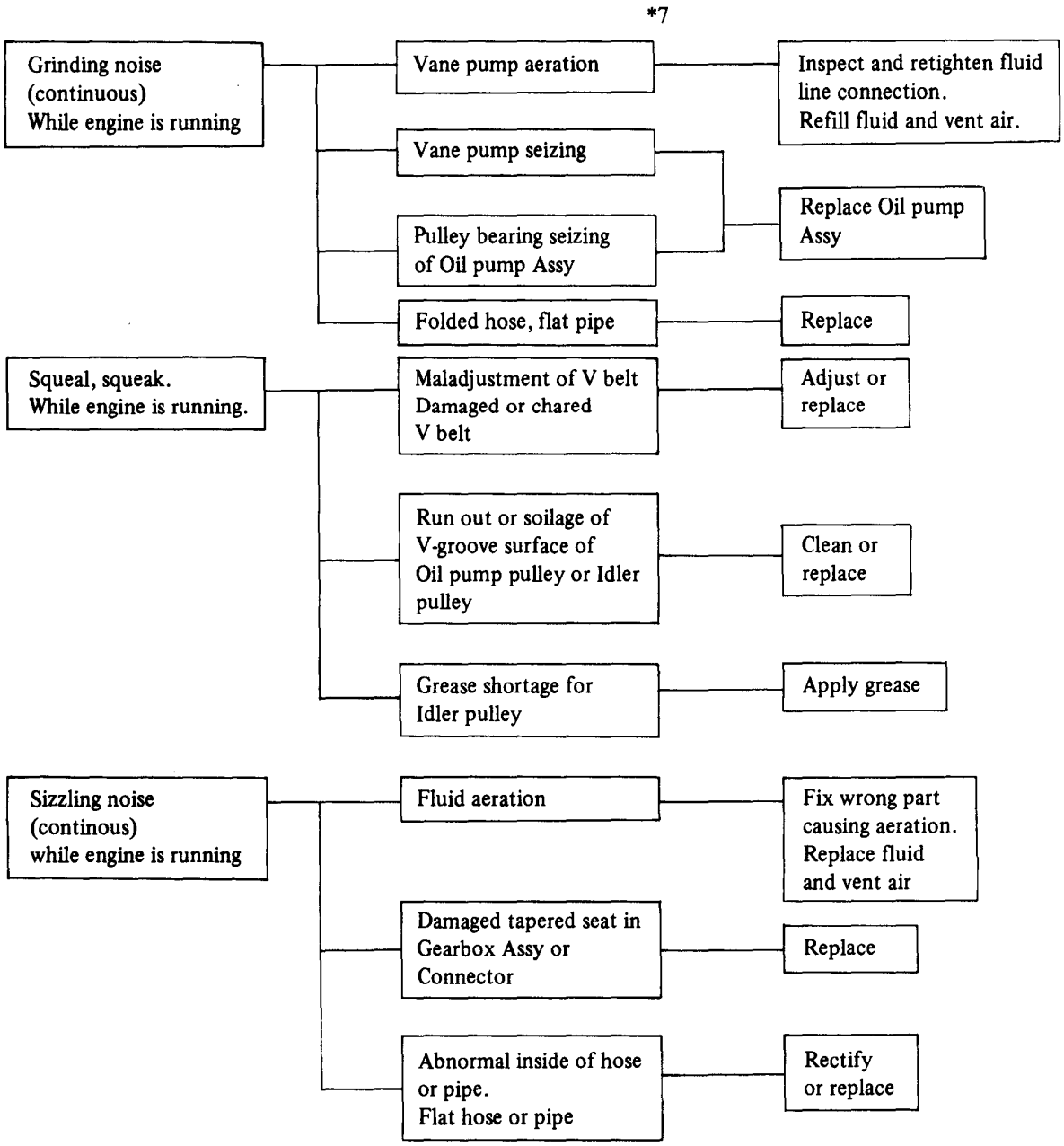

*8 Oil pump makes whine or growl noise slightly due to its mechanism. Even if the noise can be heard when steering wheel is turned at standstill there is no abnormal function in the system provided that the noise eliminates when the car is running.

*9 When stopping with service brake and/or parking brake applied, power steering can be operated easily due to its light steering effort. If doing so, the disk rotates slightly and makes creaking noise. The noise is generated by creaking between the disk and pads. If the noise goes off when the brake is released, there is no abnormal function in the system.

*10 There may be a little vibration around the steering devices when turning steering wheel at standstill, even though the component parts are properly adjusted and have no defects.
Hidraulic systems are likely to generate this kind of vibration as well as working noise and fluid noise because of conbined conditions, i.e.,
Road surface and tire surface, Engine speed and turning speed of steering wheel, Fluid temperature and braking condition.
This phenomena does not indicate there is some abnormal function in the system.
The vibration can be known when steering wheel is turned repeatedly at various speeds from slow to rapid step by step with parking brake applied on concrete road and in "D" range for automatic transmission vehicle.

Downloaded from www.Manualslib.com manuals search engine

Whistle (continuous) while engine is running	Abnormal tapered seat in Gearbox Assy, Connector or abnormal inside of Hose	Replace Gearbox Assy, Connector, Hose
Whine or growl (continuous or intermittent) while engine is running with/without steering turned	Loosened installation of Oil pump Assy, Pump bracket	Retighten
	*8 Abnormal inside of Oil pump Assy, Hose	Replace Oil pump Assy, Hose, if the noise can be heard when running as well as stand still
	Torque converter growl	Remove power steering V belt and confirm
Creaking noise (intermittent) while engine is running with steering turned	Abnormal inside of Gearbox Assy	Replace Gearbox Assy
	Abnormal bearing for Steering shaft	Apply grease or replace
	*9 Generates when turning steering wheel with brake (service or parking) applied	If the noise goes off when brake is released, normal
*10 Vibration while engine is running with/without steering turned	Too low E/G speed at start	Adjust and Instruct customers
	Vane pump aeration	Fix wrong part. Vent air
	Damaged valve in Oil pump Assy, Gearbox Assy	Replace Oil pump Assy, Gearbox Assy
	Looseness or play of Steering, Suspension parts	Retighten

Downloaded from www.Manualslib.com manuals search engine

6) Clearance table

Location	Min. allowance mm (in)	Location	Min. allowance mm (in)
① Movable side of E/G mounting rubber – Pipes	10 (0.39)	⑧ Boot – Boot protector	1 (0.04)
Fixed side of E/G mounting rubber – Pipes	5 (0.20)	⑨ DOJ boot – around Inputshaft	9.5 (0.374)
② Boot protector – Pipe	2 (0.08)	⑩ Rubber coupling – Brake pipe	15 (0.59)
③ Oil pan – Pipes	10 (0.39)	⑪ Rubber coupling – Heater hose	10 (0.39)
④ Air stove – Pipes	10 (0.39)	⑫ Pipe – Pipe	1 (0.04)
⑤ Pump bracket – Shroud	18 (0.71)	Pipe – Crossmember	1 (0.04)
V belt – Shroud	15 (0.59)	⑬ Hose – Spare tire supporter	5 (0.20)
Idler cap – Shroud	13 (0.51)	⑭ Hose – Washer tank	15 (0.59)
⑥ V belt – Distributor	5 (0.20)	⑮ DOJ – Valve housing	10 (0.39)
⑦ ATC hose – V belt	5 (0.20)	⑯ Crossmember – Cylinder	1 (0.04)
Air horn – V belt	5 (0.20)	⑰ Connector – Crossmember	1 (0.04)

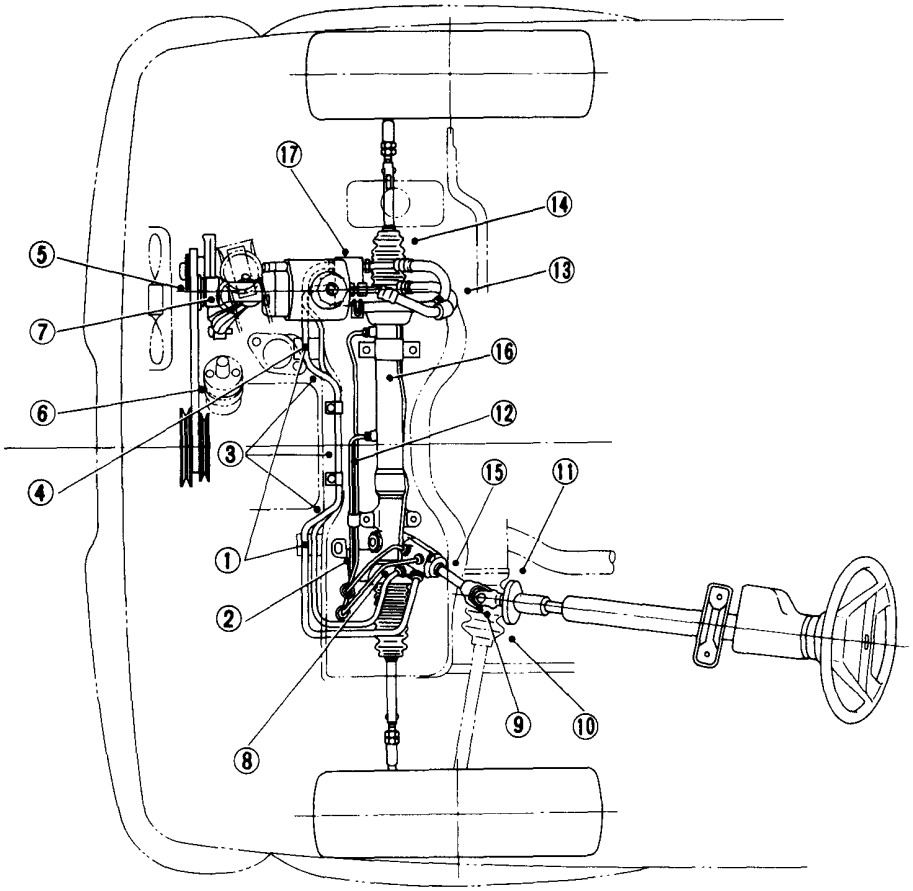

A18-371

Fig. 11-166

Downloaded from www.Manualslib.com manuals search engine

7) Breakage of Hoses

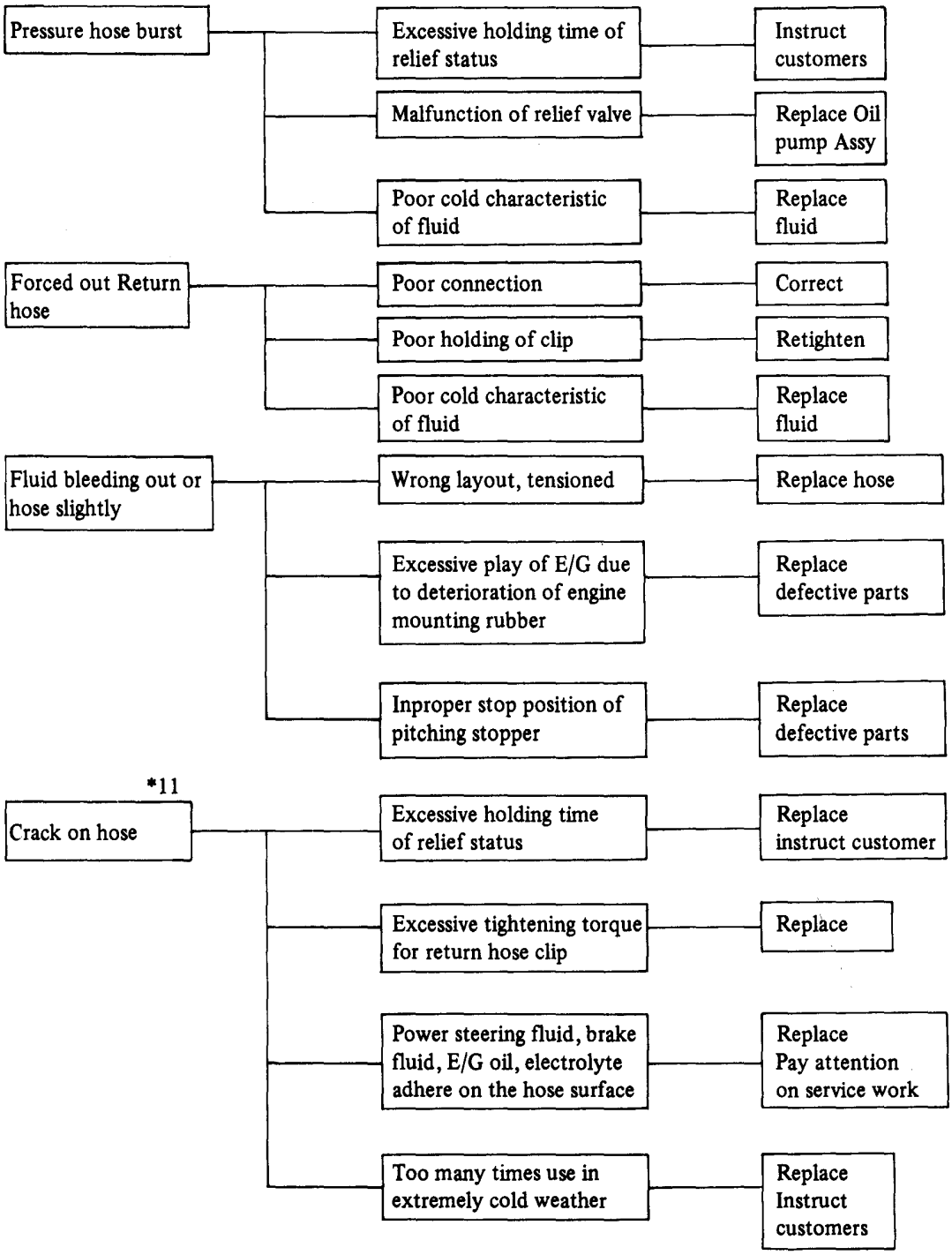

*11 Although surface layer materials of rubber hoses have excellent weathering resistance, heat resistance and resistance for low temperature brittleness, they are likely to be damaged chemically by brake fluid, battery electrolyte, engine oil and automatic transmission fluid and their service lives are to be very shortened. It is very important to keep the hoses free from before-mentioned fluids and to wipe out immediately when the hoses are adhered with the fluids.
Since resistances for heat or low temperature brittleness are gradually declining according to time accumulation of hot or cold conditions for the hoses and their service lives are shortening accordingly, it is necessary to perform careful inspection frequently when the car is used in hot weather areas, cold weather areas and/or a driving condition in which many times steerings are required in short time. Particularly continuous work of relief valve over 5 seconds causes to reduce service lives of the hoses, the oil pump assembly, the fluid, etc. due to over heat.
So, avoid to keep this kind of condition when servicing as well as driving.

Downloaded from www.Manualslib.com manuals search engine

11-12. Special Tools

925640000	925670000	925680000	925690000
SPANNER	SOCKET	HANDLE	STAND
Steering gearbox	Flare nut of control valve	Flare nut of control valve	Steering gearbox
Fig. 11-167 A3-167	*Fig. 11-168* A18-230	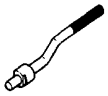 *Fig. 11-169* A18-231	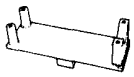 *Fig. 11-170* A18-232
925700000	925710000	925720000	
WRENCH	PRESSURE GAUGE	REMOVER	
Tie-rod	Oil pump	Idler pulley bearing	
Fig. 11-171 A18-233	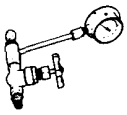 *Fig. 11-172* A18-234	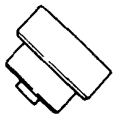 *Fig. 11-173* A18-235	

Downloaded from www.Manualslib.com manuals search engine

Downloaded from www.Manualslib.com manuals search engine

CHAPTER 12

PEDAL AND CABLE

		Page
12–1.	PEDAL	12–2
	1. Component Parts	12–2
	2. On-car Services	12–3
	3. Removal and Disassembly	12–3
	4. Inspection	12–4
	5. Assembly	12–4
	6. Installation	12–5
12–2.	CABLE	12–6
	1. Clutch Cable	12–6
	2. Accelerator Cable	12–7
	3. Speedometer Cable	12–8

SUBARU

Downloaded from www.Manualslib.com manuals search engine

12-1. Pedal

1. Component Parts

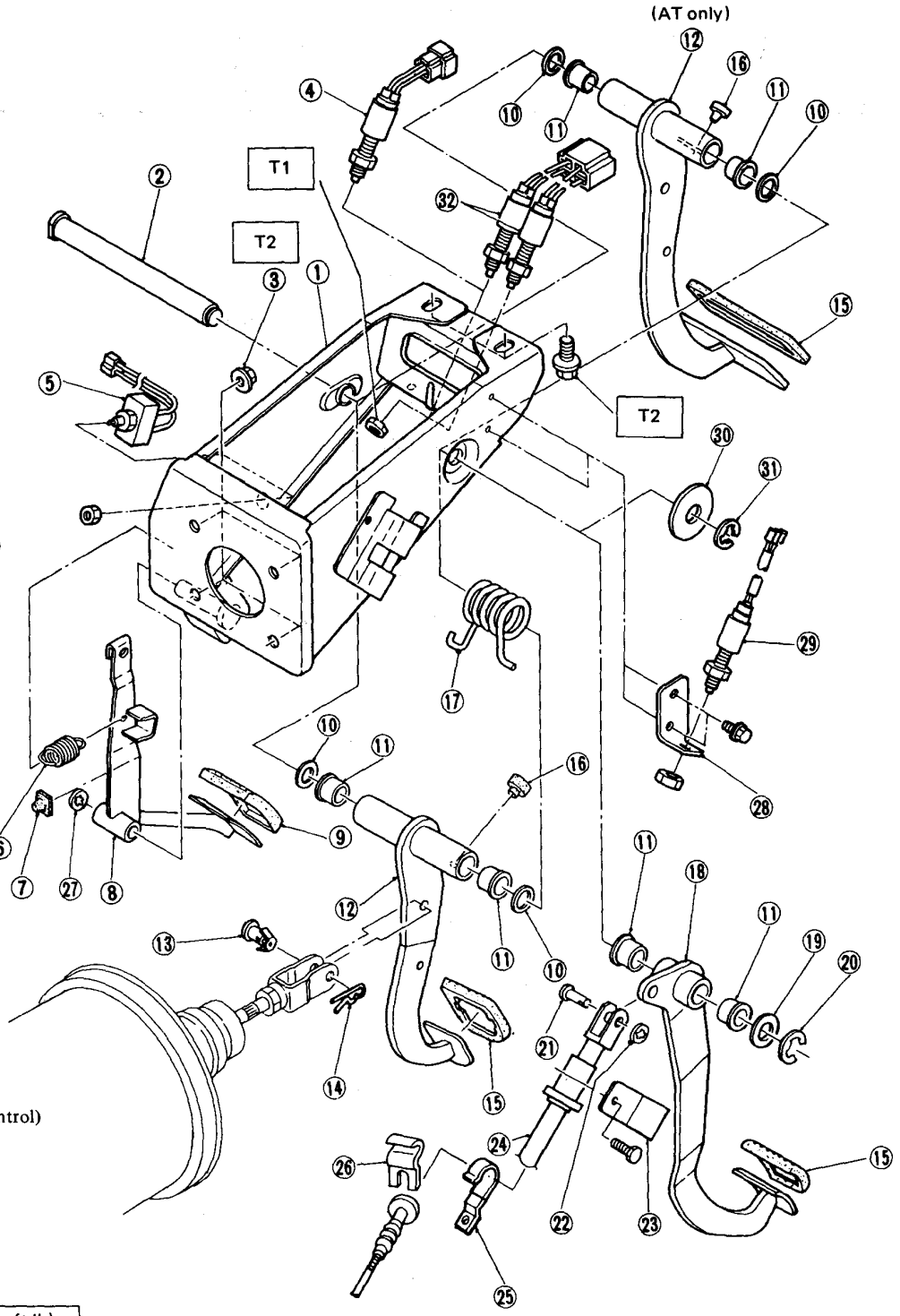

1 Pedal bracket
2 Pedal shaft
3 Flange nut
4 Stop light switch
5 Kick-down switch (AT only)
6 Accelerator spring
7 Stopper
8 Accelerator pedal
9 Accelerator pedal pad
10 Washer
11 Bushing
12 Brake pedal
13 Clevis pin
14 Snap pin
15 Pedal pad
16 Stopper
17 Brake pedal spring
18 Clutch pedal
19 Washer
20 Clip
21 Clevis pin
22 Clip
23 Clutch cable clamp
24 Clutch cable
25 Clamp
26 Clamp
27 Clip
28 Clutch switch bracket (for cruise control)
29 Clutch switch (for cruise control)
30 Washer (AT only)
31 Clip (AT only)
32 Stop & brake switch (for cruise control)

Tightening torque N·m (kg-m, ft-lb)
T1: 5.4 - 9.3 (0.55 - 0.95, 4.0 - 6.9)
T2: 13 - 23 (1.3 - 2.3, 9 - 17)

A20-093

Fig. 12-1

Downloaded from www.Manualslib.com manuals search engine

2. On-car Services

1) Brake Pedal

1) Check position of pedal pad.
If it is not in specified value, adjust it by adjusting power brake unit operating rod length.

Reserve distance (Remaining clearance)
More than 80 mm (3.15 in)/ 294 N (30 kg, 66 lb)

Check free play by operating pedal by hand.
If it is not in specified value, adjust it by adjusting position of stop lamp switch.

NOTE:
Be careful not to rotate stop lamp switch.

Brake pedal free play
5 – 11 mm (0.20 – 0.43 in)

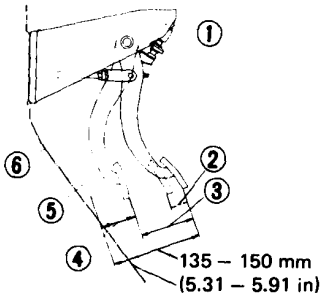

1 Stop lamp switch
2 Free play
3 Stroke
4 Remaining clearance
5 Mat
6 Toe board

A20-054

Fig. 12-2 Checking brake pedal

2) Apply grease to operating rod connecting pin to prevent it from wearing.

2) Clutch Pedal

1) Check clutch pedal free play by operating pedal by hand.
If it is not in specified value, adjust it by turning adjusting nut on engine side end of clutch cable.

Free play	at clutch pedal pad 13 – 20 mm (0.51 – 0.79 in)
	at center of cable on clutch release fork 2 – 3 mm (0.08 – 0.12 in)

Locking nut tightening torque	5.4 – 9.3 N·m (0.55 – 0.95 kg-m, 4.0 – 6.9 ft-lb)

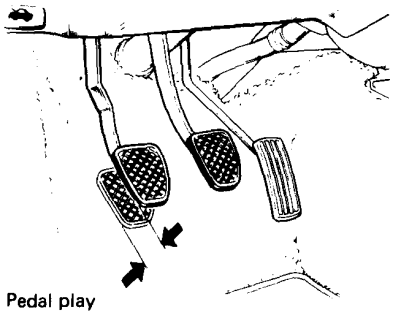

OM-526

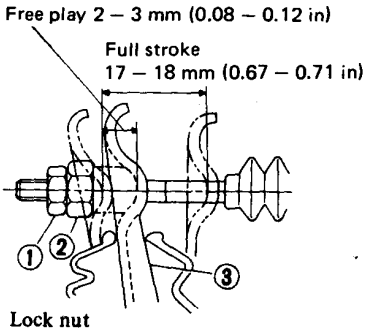

1 Lock nut
2 Adjusting nut
3 Release fork

A20-051

Fig. 12-3 Adjusting clutch pedal free play

2) Apply grease to connecting portion of clutch pedal and clutch cable and contact point of clutch release fork and clutch cable nut.

3) Accelerator Pedal

Check pedal stroke and free play by operating accelerator pedal by hand.
If it is not in specified value, adjust it by turning nut connecting accelerator cable to carburetor.

Free play at pedal pad	0 – 5 mm (0 – 0.20 in)
Stroke	at pedal pad 44 – 50 mm (1.73 – 1.97 in)
	at cable end 29 – 33 mm (1.14 – 1.30 in)

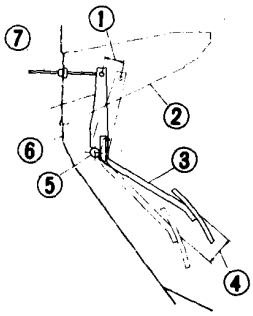

1 Stroke at cable end
2 Pedal bracket
3 Accelerator pedal
4 Stroke at pedal pad
5 Pin
6 Toe board
7 Accelerator cable

A20-073

Fig. 12-4 Operation at accelerator pedal

3. Removal and Disassembly

1) Disconnect ground cable from battery.
2) Disconnect accelerator cable from carburetor.
3) Disconnect/detach clutch cable from the following parts.
a. Clutch release fork
b. Clamp on transmission case
c. Grommet of toe board
4) Detach trim panel and lower steering column.

Downloaded from www.Manualslib.com manuals search engine

5) Disconnect the following parts from pedal bracket.
a. Operating rod of brake booster
b. Electrical connectors (for stop light switch, etc.)
c. Accelerator cable

NOTE:
Be careful not to kink accelerator cable.

6) Remount pedal bracket ASSY along with clutch cable while supporting brake booster in engine room.
7) Detach following parts from pedal bracket assembly.
a. Accelerator pedal return spring
b. Accelerator pedal
c. Clutch cable
d. Brake pedal return spring
e. Circlip retaining pedal shaft
f. Clutch pedal and brake pedal
g. Stop light switch

4. Inspection

1) Pedal Shaft and Bushing

1) Clean off grease and dust, and inspect for wear and damage.
2) Inspect play between bushing and shaft, replace bushing and/or shaft with new one if defective.

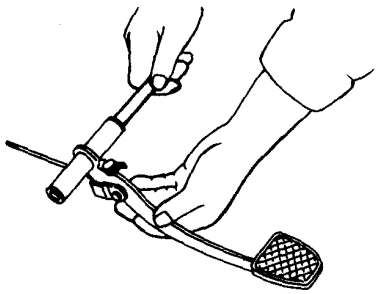

Fig. 12-5 Inspecting play between bushing and shaft

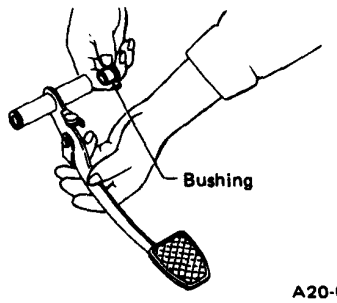

Fig. 12-6

2) Accelerator Pedal

Clean up all parts and inspect for wear and damage.
Replace it with new one if defective.

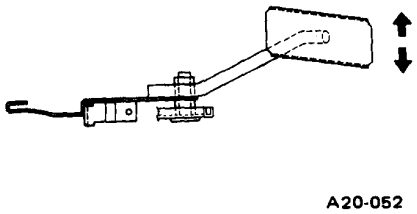

Fig. 12-7 Inspecting accelerator pedal

3) Stop Light Switch

Inspect switch stroke and operation.
If operation is not smooth and/or stroke is not within specified value, replace it with new one.

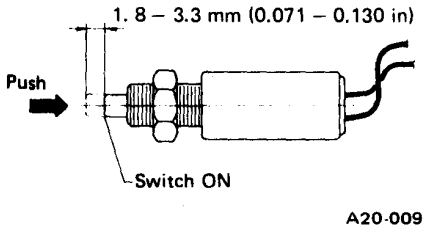

Fig. 12-8 Inspecting stop light switch

5. Assembly

1) Attach stop light switch, etc. to pedal bracket temporarily.
2) Clean inside of bores of clutch pedal and brake pedal, apply grease, and set bushings into bores.
3) Align bores of pedal bracket, clutch pedal and brake pedal, attach brake pedal return spring, and then install pedal shaft completely to prevent it from rotating.

NOTE:
a. Make sure of 2 washers being installed at both sides of brake pedal.
b. Clean up inside of bushes and apply grease before installing shaft.

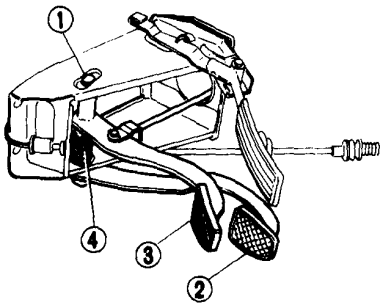

1 Pedal shaft
2 Clutch pedal
3 Brake pedal
4 Brake pedal return spring

Fig. 12-9 Installing pedal

4) Clean and apply grease to shaft and inside of bore of accelerator pedal. Install accelerator pedal onto pedal bracket.
5) Set brake pedal position by adjusting position of stop light switch.

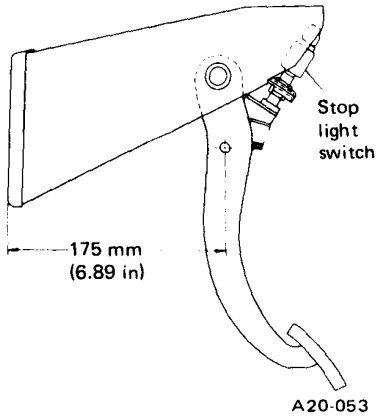

Fig. 12-10 Adjusting brake pedal position

Torque (Lock nut)	5.4 – 9.3 N·m (0.55 – 0.95 kg-m, 4.0 – 6.9 ft-lb)

6) Connect clutch cable to clutch pedal by using clevis pin and clip.
7) Insert clutch cable outer end to groove of pedal bracket, and hold it with cable clamp.

Clamp bolt torque	5.4 – 9.3 N·m (0.55 – 0.95 kg-m, 4.0 – 6.9 ft-lb)

Downloaded from www.Manualslib.com manuals search engine

NOTE:
Make sure that outer end of clutch cable and two washers are inserted into groove of pedal bracket completely.

6. Installation

1) Insert clutch cable into hole on toe board, and set pedal bracket above steering column.

NOTE:
Be careful not to bend clutch cable too much.

2) Insert bolts of brake booster into holes on toe board, support it from engine room, and fit holes of pedal bracket onto the bolts. At this time, At this time, operating rod of brake booster should be engaged with brake pedal.

3) While pushing pedal bracket upward firmly, tighten 4 nuts and 2 bolts at its upper surface.

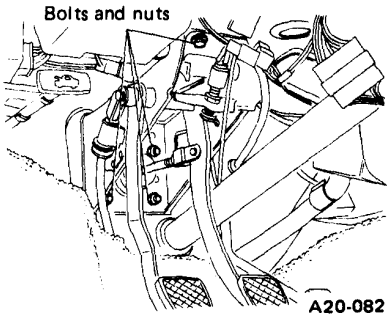

Fig. 12-11 Installing pedal ASSY

Tightening torque	13 – 23 N·m (1.3 – 2.3 kg-m, 9 – 17 ft-lb)

4) Connect operating rod of brake booster to brake pedal using clevis pin and snap pin.

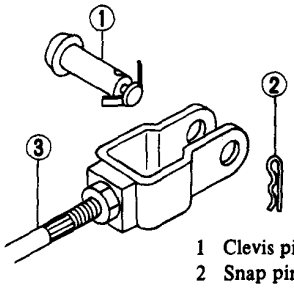

1 Clevis pin
2 Snap pin
3 Operating rod

A20-083

Fig. 12-12 Connecting operating rod and brake pedal

5) Pull out accelerator inner cable to its maximum stroke, and attach it to accelerator pedal.
Pull accelerator cable from carburetor side.

NOTE:
Be careful not to kink accelerator cable.

6) Connect electrical connectors for stop light switch, etc.

7) Install steering column as before.

8) Connect accelerator cable to carburetor.

NOTE:
Make sure to check operation of accelerator cable by operating accelerator pedal by hand.

9) Attach clutch cable grommet to toe board, and then connect clutch cable to clutch release fork.

NOTE:
Never fail to cover outer cable end with boot.

Downloaded from www.Manualslib.com manuals search engine

12-2. Cable

1. Clutch Cable

NOTE:
Apply grease to contact point of adjusting nut and release fork.

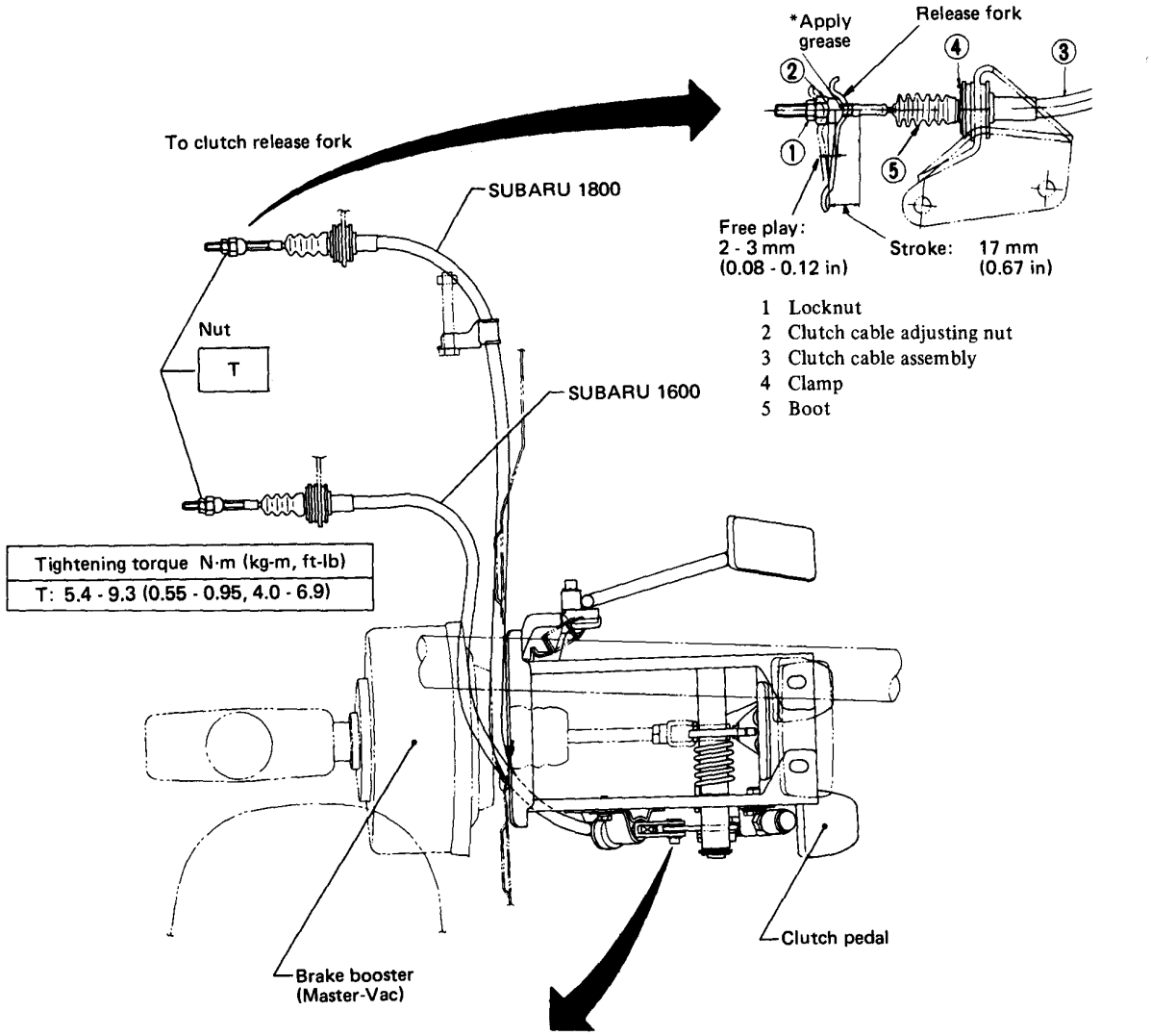

1 Locknut
2 Clutch cable adjusting nut
3 Clutch cable assembly
4 Clamp
5 Boot

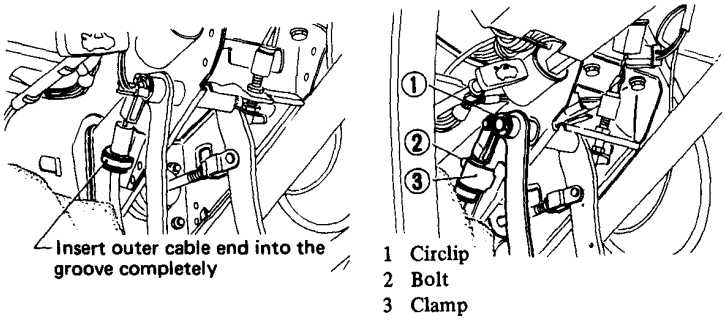

1 Circlip
2 Bolt
3 Clamp

NOTE:

a. When installing pedal and bush, clean up inside of bore of them and apply grease.
b. Apply grease to connecting portion of clutch cable and pedal.
c. Make sure that outer end of clutch cable and two washers are inserted into groove of pedal bracket completely.
d. Make sure that one end of cable clamp is engaged with slit of pedal bracket firmly.

A20-094

Fig. 12-13

Downloaded from www.Manualslib.com manuals search engine

2. Accelerator Cable

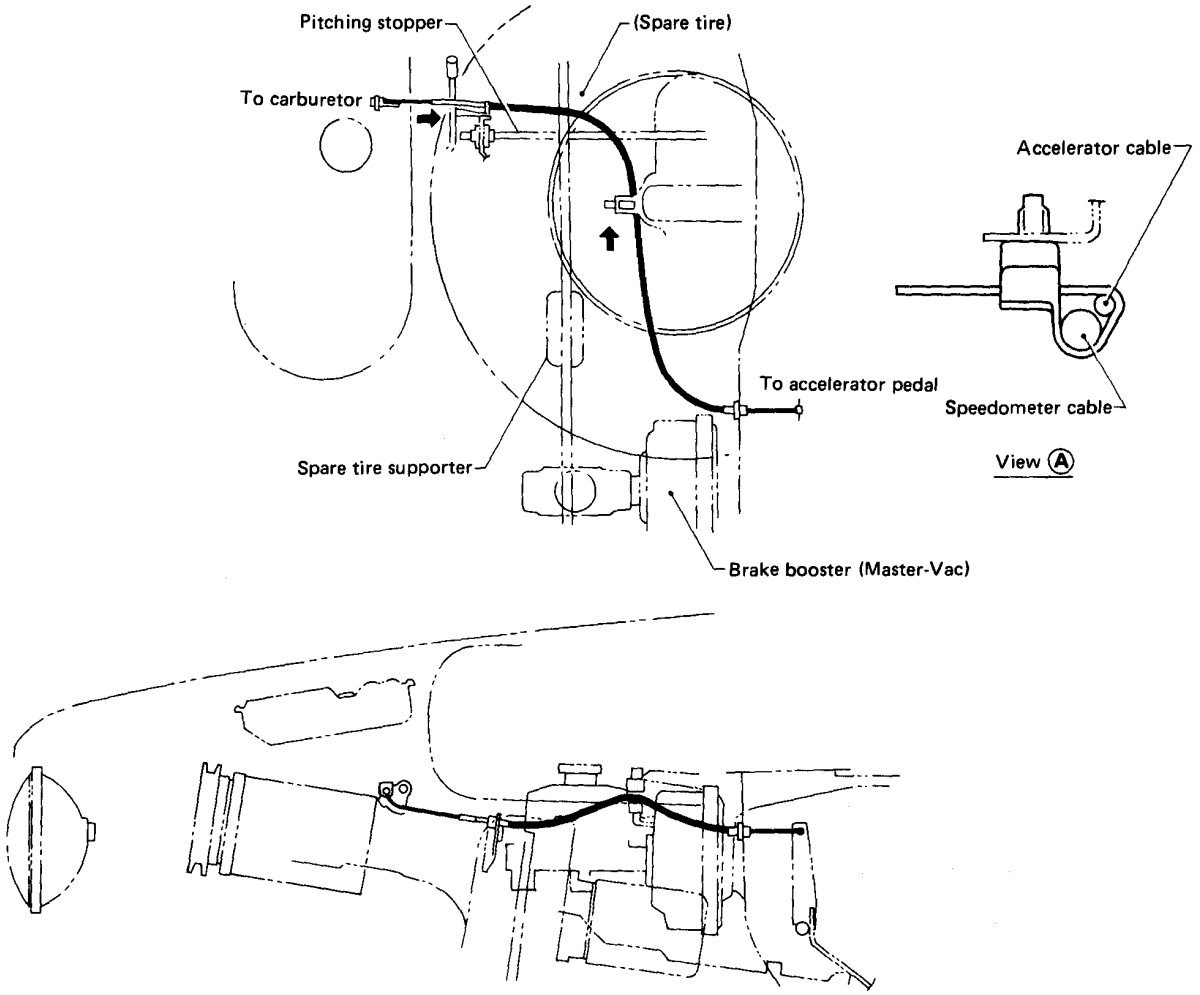

Fig. 12-14

Downloaded from www.Manualslib.com manuals search engine

3. Speedometer Cable

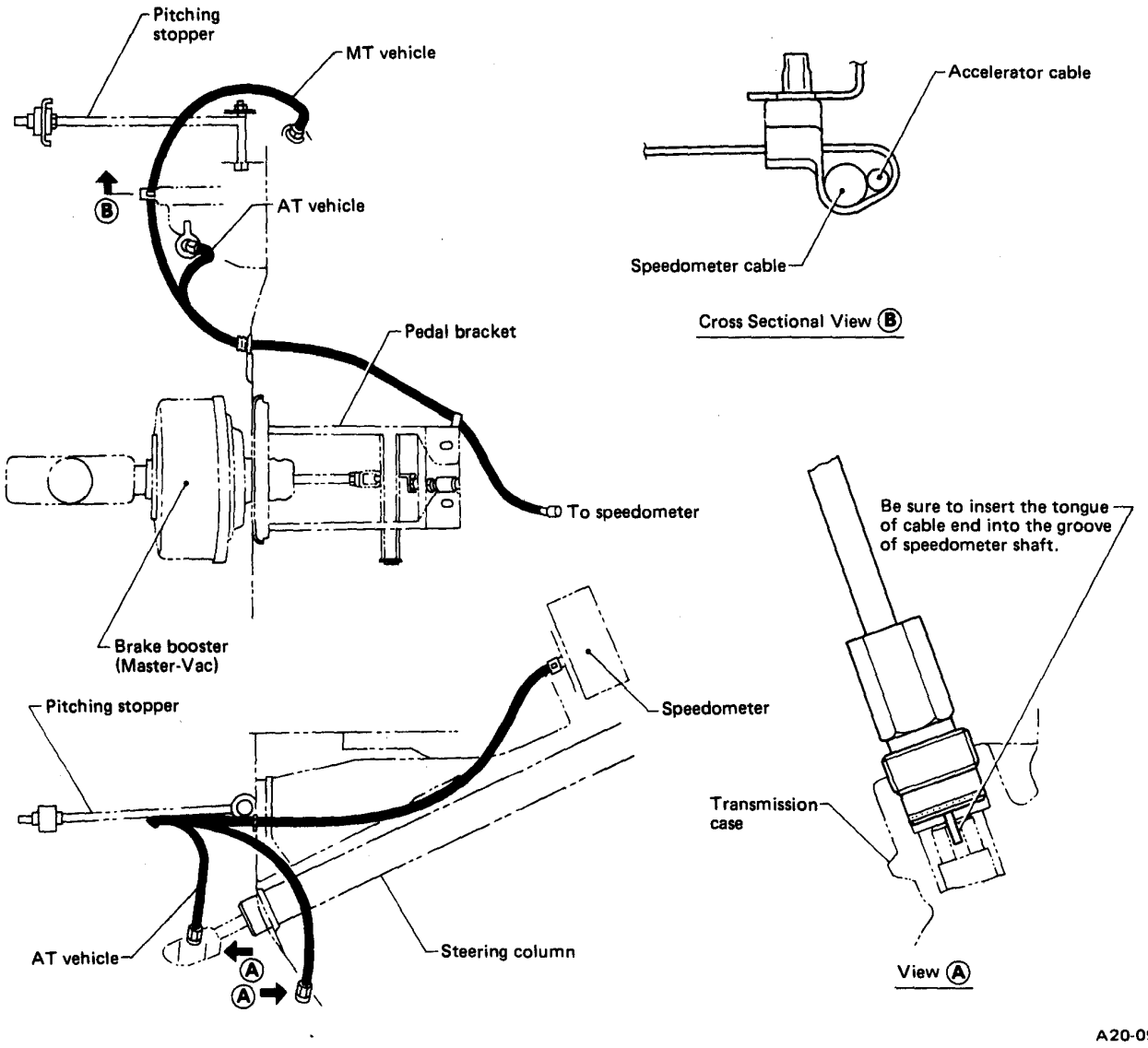

Fig. 12-15

Downloaded from www.Manualslib.com manuals search engine

CHAPTER 13

HEATING, VENTILATING AND AIR-CONDITIONING SYSTEM

		Page
13–1.	SPECIFICATIONS AND SERVICE DATA	13– 2
13–2.	HEATING AND VENTILATING	
	1. Outline	13– 4
	2. On-car Services	13– 7
	3. Repair for Component Parts	13– 9
13–3.	AIR-CONDITIONING	
	1. Outline	13–12
	2. On-car Services	13–19
	3. Repair for Component Parts	13–30
13–4.	TROUBLESHOOTING	
	1. Heating and Ventilating	13–38
	2. Air-conditioning	13–41
13–5.	SPECIAL TOOLS	13–50

REMARKS:

The description for air-conditioning system in this chapter pertains only to the SUBARU AIR-CONDITIONING SYSTEM that is installed as original equipment by the manufacturer (FUJI HEAVY INDUSTRIES, LTD.).

SUBARU

Downloaded from www.Manualslib.com manuals search engine

13-1. Specifications and Service Data

1. Heating and Ventilating

ITEM		SPECIFICATIONS	CONDITION
Heating capacity		4.536 kW (3,900 kcal/h, 15,475 BTU/h)	• Temperature difference between hot water and inlet air : 65°C (149°F) • Hot water flowing volume : 360 ℓ/h (95.1 US gal/h, 79.2 Imp gal/h)
Air volume		340 m^3/h (12,000 cu ft/h)	–
Fan	type diameter x width	sirocco fan 140 x 65 mm (5.51 x 2.56 in)	–
Fan motor		160 W	at 12 V magnet motor
Heater core size (width x height x thickness)		140.5 x 180 x 49 mm (5.53 x 7.09 x 1.93 in)	–

2. Air-conditioning

Item		Specifications
Type of air conditioner Standard cooling efficiency (IMACA) Refrigerant		Reheat air mix type 4.419 kW (3,800 kcal/h, 15,078 BTU/h) R-12 (CCL_2F_2) [0.74 – 0.79 kg (1.63 – 1.74 lb)]
Compressor	Type Discharge Max. permissible speed	Swash plate type MJS 170-5AV 170 cm^3 (170 cc, 10.37 cu in)/rev. 7,000 rpm
Magnet clutch	Type Power consumption Type of belt Pulley dia. (effective dia.) Pulley ratio	Dry, single-disc type PMC135-8AA 40W A type 145 mm (5.71 in) 0.92
Condenser	Type Front area Core thickness Radiation area	Corrugated fin type 0.147 m^2 (1.58 sq ft) 26 mm (1.02 in) 3.51 m^2 (37.8 sq ft)
Receiver dryer	Capacity Strainer	410 cm^3 (410 cc, 25.02 cu in) 80 to 120 meshes
Expansion valve	Type	Automatic temperature control, internal pressure-balance type
Evaporator	Type Dimensions (W x H x T)	Corrugated fin type 101 x 170 x 230 mm (3.98 x 6.69 x 9.06 in)

Downloaded from www.Manualslib.com manuals search engine

Item		Specifications
Blower fan	Fan type Outer diameter x width Power consumption	Silocco fan type 140 x 65 mm (5.51 x 2.56 in) 160 W at 12 V
Condenser fan (Sub fan)	Motor type Power consumption Fan outer diameter	Print type 95 W at 12 V 300 mm (11.81 in)
Radiator fan (Main fan)	Motor type Power consumption Fan outer diameter	Magenet type 120 W at 12 V 280 mm (11.02 in)
Idling speed with F.I.C.D. in operation Low-pressure-switch working pressure High-pressure switch Pressure switch (Main fan control)		950 ± 50 rpm 196 ± 20 kPa (2 ± 0.2 kg/cm^2, 28 ± 2.8 psi) G 2,403 ± 98 kPa (24.5 ± 1.0 kg/cm^2, 348 ± 14 psi) G (ON → OFF) 1,912 ± 98 kPa (19.5 ± 1.0 kg/cm^2, 277 ± 14 psi) G (OFF → ON) 1,569 ± 78 kPa (16.0 ± 0.8 kg/cm^2, 228 ± 11 psi) G (ON → OFF) 1,275 ± 98 kPa (13.0 ± 1.0 kg/cm^2, 185 ± 14 psi) G (OFF → ON)

Downloaded from www.Manualslib.com manuals search engine

13-2. Heating and Ventilating

1. Outline

1) Heater Unit and Duct

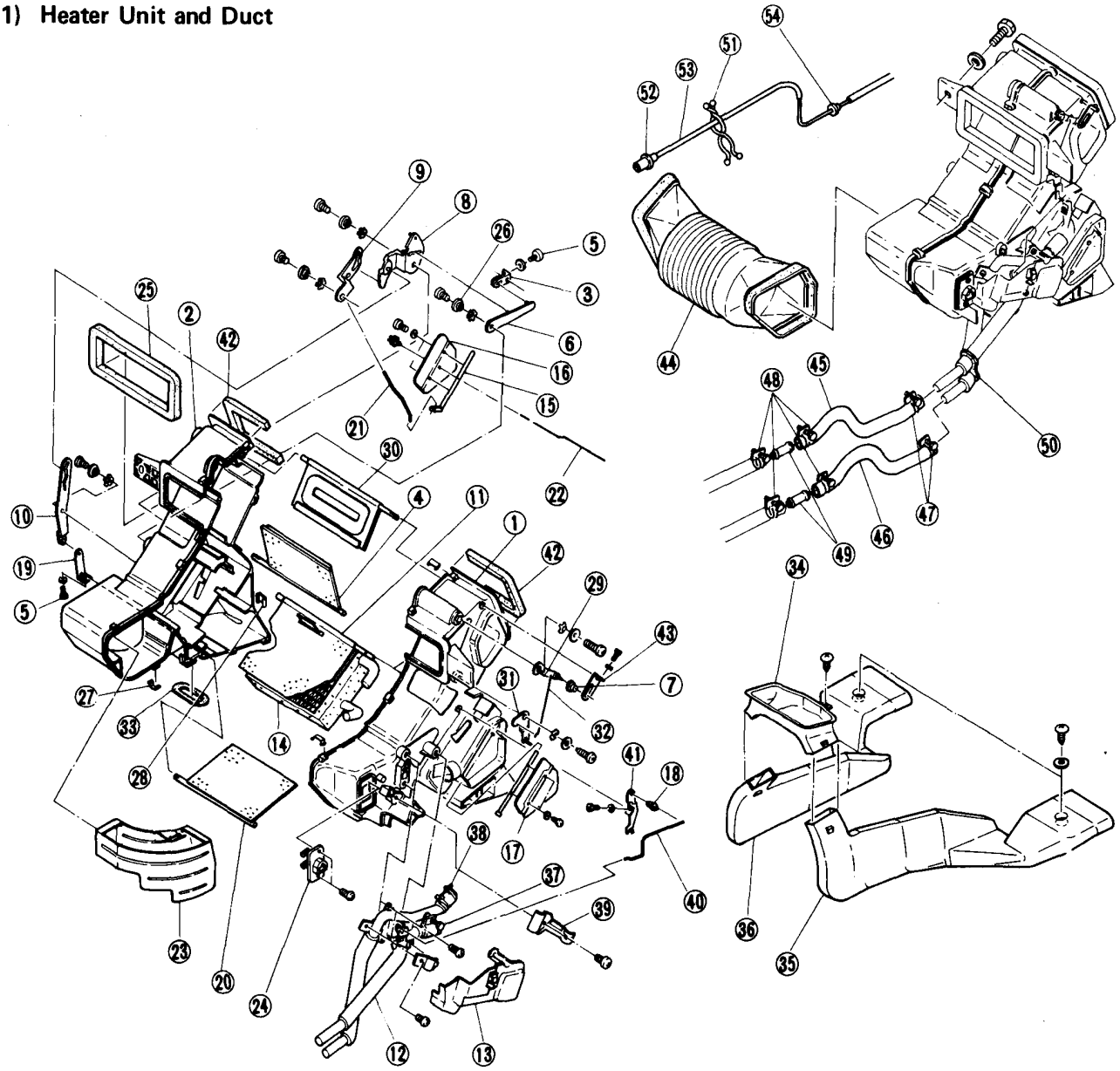

A23-128

1 Heater case (L.H.)
2 Heater case (R.H.)
3 Upper lever
4 Upper shutter
5 Screw
6 Upper link
7 Bushing
8 Mode lever
9 Defroster link
10 Lower link
11 Air mixing shutter
12 Heater cock CP
13 Protector
14 Heater core
15 Defroster shaft
16 Defroster shutter (R.H.)
17 Defroster shutter (L.H.)
18 Rod clamp
19 Lower lever
20 Lower shutter
21 Defroster rod
22 Defroster shutter shaft
23 Guide
24 Resistor
25 Intake packing
26 Shaft bushing
27 Hold spring A
28 Hold spring B
29 Ventilation link A
30 Ventilation shutter
31 Ventilation link B
32 Ventilation rod
33 Cushion
34 Lower duct
35 Rear duct (L.H.)
36 Rear duct (R.H.)
37 Hose clamp A
38 Hose clamp B
39 Hose bracket
40 Heater cock rod
41 Air mixing lever
42 Ventilation packing
43 Ventilation lever
44 Heater duct
45 Heater inlet hose
46 Heater outlet hose
47 Hose clamp
48 Hose clamp
49 Connector
50 Heater hose grommet
51 Clip
52 Vacuum connector
53 Vacuum hose
54 Vacuum hose grommet

Fig. 13-1 Component parts

Downloaded from www.Manualslib.com manuals search engine

2) Blower Assembly and Control System

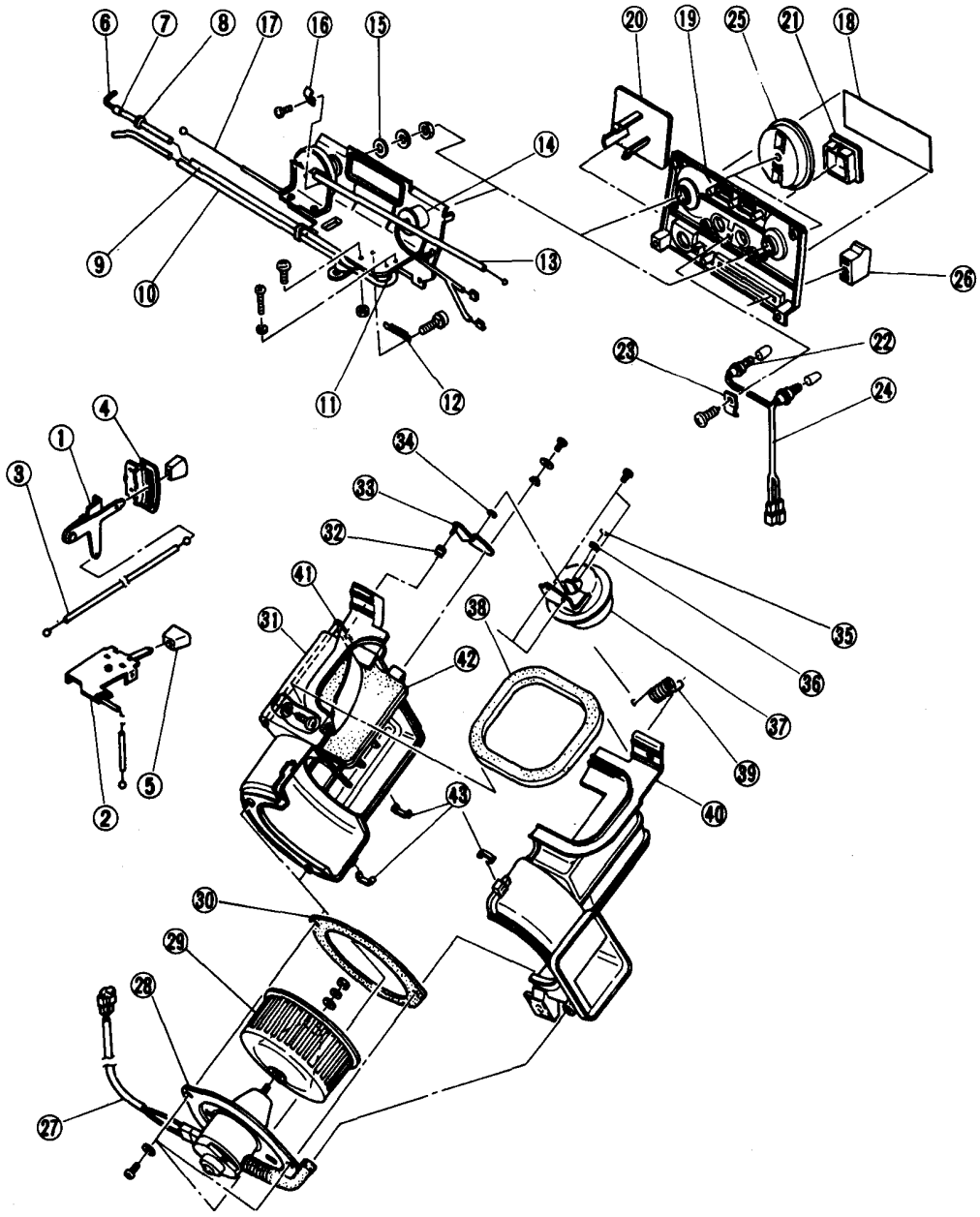

1 Fresh air ventilation lever (Standard type)
2 Fresh air ventilation lever (Multi type)
3 Ventilation cable
4 Ventilation grille
5 Ventilation knob
6 Vacuum pipe
7 Vacuum hose
8 Check valve
9 Vacuum hose
10 Vacuum hose
11 Vacuum switch
12 Spring
13 Temperature control cable
14 Fan switch
15 Bushing
16 Cable clamp
17 Mode control cable
18 Plate
19 Panel
20 Cigarette lighter cap
21 Rear defogger switch
22 Bulbs
23 Cord clamp
24 Cord assembly
25 Fan and temperature control knobs
26 Mode lever knob
27 Harness
28 Motor assembly
29 Blower
30 Packing
31 Blower case (R.H.)
32 Bushing
33 Intake shutter lever
34 Spacer
35 Clip
36 Bushing
37 Actuator
38 Packing
39 Intake shutter return spring
40 Blower case (L.H.)
41 Intake shutter shaft
42 Intake shutter
43 Springs

Fig. 13-2 Component parts

Downloaded from www.Manualslib.com manuals search engine

Control lever

The heater control system consists of a mode lever which selects air outlets, temperature control dial which regulates the outlet air temperature, and fan switch.

The fresh air ventilation control lever is located on the instrument panel.

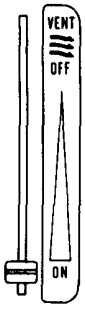

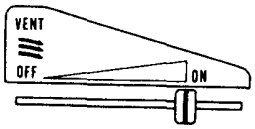

A23-126

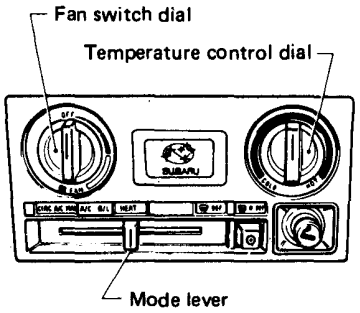

A23-144

Fig. 13-3

Operation of control lever and air flow diagram

Position of mode lever / Temperature and fan control dial		CIRC A/C MAX	A/C	B/L	HEAT	DEF
Heating	Temperature HOT		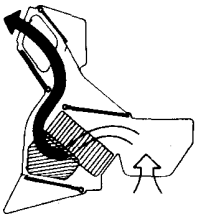		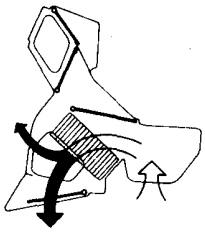	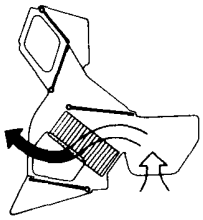
	Fan switch	OFF	ON	ON	ON	ON
Forced air ventilation	Temperature COLD	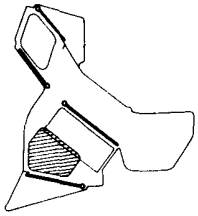	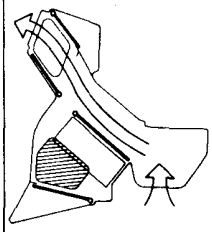	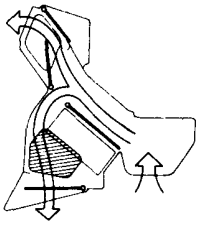	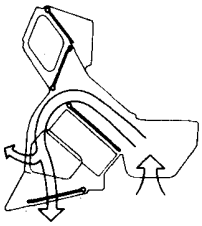	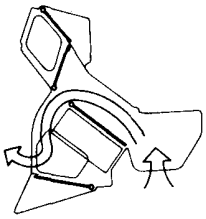
	Fan switch	OFF	ON	ON	ON	ON

NOTE:

a. ⇦ **fresh air flow**
⬅ **heated air flow**

b. It is possible to use fresh air ventilation independent of above operation.

c. In this diagram, the fresh air ventilation lever is set in the "OFF" position.

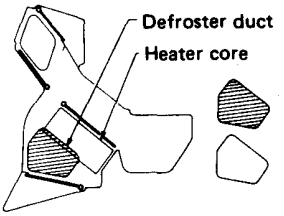

means defroster shutter close

means defroster shutter open

A23-127

Fig. 13-4 Air flow diagram

Downloaded from www.Manualslib.com manuals search engine

2. On-car Services

1) Mode Lever

Check

Check air leakage as follows.

1) Start the engine and set temperature control dial to COLD position. Then set fresh air ventilation lever of OFF position.
2) Then check air leakage after switching on the fan to the fourth step.
   i) A/C position
   a. With mode lever at this position, outside air is directed to compartment only from center and side air outlets.
   If leakage exceeds 0.5 m/sec (1.6 ft/sec) through lower outlet or more than 0.8 m/sec (2.6 ft/sec) through DEF nozzle, it is necessary to adjust control system.

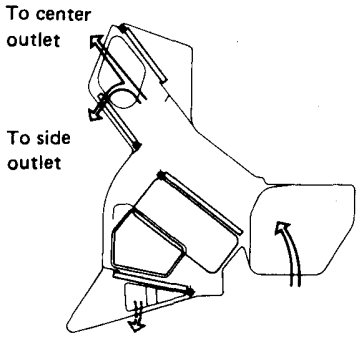

If air leakage exceeds 0.5 m/sec (1.6 ft/sec), adjust control system.

A23-078

Fig. 13-5 Leakage at lower outlet

   b. Use the following simple method for checking air leakage.
   Hold a lighted cigarette near air outlet. If stream of cigarette smoke flows in the direction of outlet air, air leakage of at least 0.3 m/sec (1.0 ft/sec) is present.

Less than 0.3 m/sec (1.0 ft/sec)

0.3 – 0.5 m/sec (1.0 – 1.6 ft/sec)

A23-079

Fig. 13-6 Simple methods for measuring leakage

   ii) HEAT position
   With mode lever in this position, most of outside air is directed through lower air outlets, with air also discharged from defroster nozzle at a speed of 1 to 2 m/sec (3 to 7 ft/sec) into compartment.
   If leakage exceeds 0.3 m/sec (1.0 ft/sec) through center or side outlets, adjust control system.
   iii) DEF position
   With mode lever in this position, air is discharged only from defroster nozzle. If leakage exceeds 0.5 m/sec (1.6 ft/sec) through lower outlet or 0.3 m/sec (1.0 ft/sec) through center and side outlets, adjust the control system.

Adjustment

1) Remove luggage shelf on the passenger's seat side.
2) Remove right defroster duct from heater unit.
3) Disconnect the cable from the clamp at heater unit.

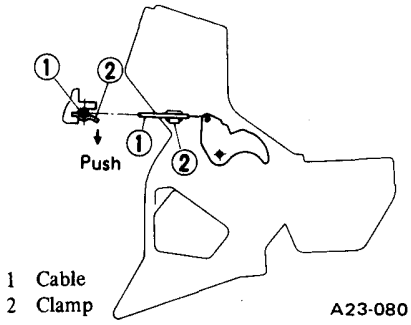

1 Cable
2 Clamp

A23-080

Fig. 13-7 Disconnecting the cable

4) Set mode lever to CIRC position.
5) Set the linkage at the heater unit side to CIRC position. (Pulling lever B up backward)

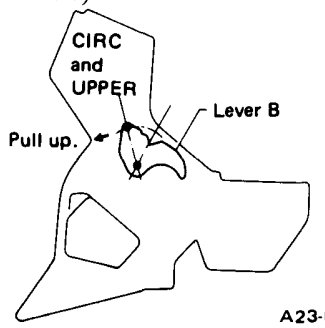

A23-071

Fig. 13-8 Setting the lever

6) After connecting the cable to lever B, connect the cable to the clamp while pulling the cable up backward.

Standard Value F	48 mm (1.89 in)

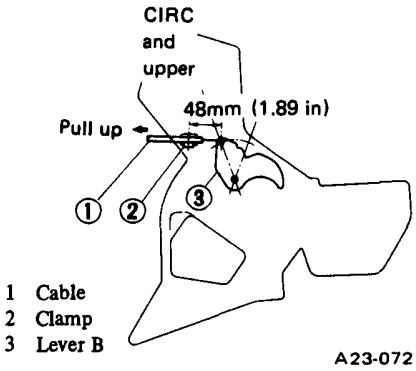

1 Cable
2 Clamp
3 Lever B

A23-072

Fig. 13-9 Connecting the cable

7) Disconnect defroster shutter shaft from plastic clamp at lever D.

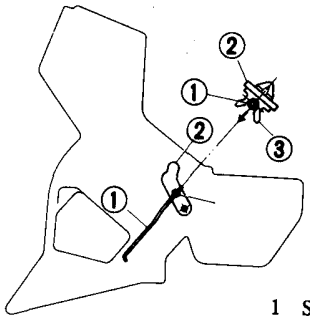

1 Shaft
2 Lever D
3 Clamp

A23-081

Fig. 13-10 Disconnecting the shaft

8) Connect the shaft to plastic clamp at the lever D while pulling the shaft up backward.

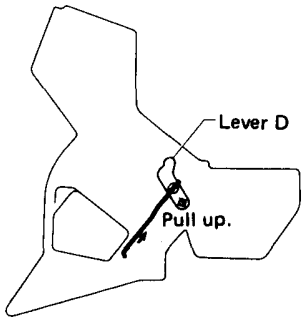

A23-082

Fig. 13-11 Connecting the shaft

9) Install defroster duct.

Downloaded from www.Manualslib.com manuals search engine

10) In this situation, check air leakage according to the predescribed procedure.

2) Temperature Control Dial

Check

Check outlet air temperature as follows.

Start the engine and set fresh air ventilation lever to OFF position. After warming up the engine (about 7 to 10 minutes later), check the temperature as follows.

i) LOWER position

a. Set fan switch dial to the first step and temperature control dial to COLD position.

b. Measure outlet air temperature at lower outlet of heater unit. (The measurement of outlet air temperature can be carried out by a usual thermometer.) In this case outlet air temperature at lower outlet is same as outside air temperature.

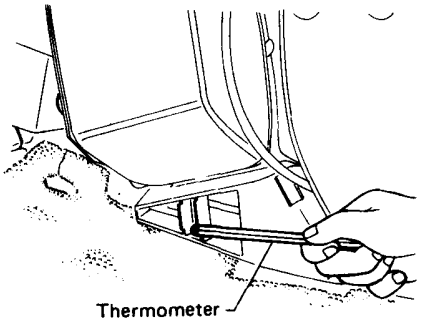

A23-083

Fig. 13-12 Measuring the outlet air temperature

c. If outlet air temperature is more higher (about 5 degrees) than outside air temperature, adjust the control system of water cock.

ii) DEF position

a. Set fan switch dial to the fourth step and temperature control dial to HOT position.

b. Measure outlet air temperature at defroster nozzle. In this case outlet air temperature rises as follows.

Outside air temperature	Outlet air temperature
−20°C (−4°F)	more than 50°C (122°F)
0°C (32°F)	more than 60°C (140°F)

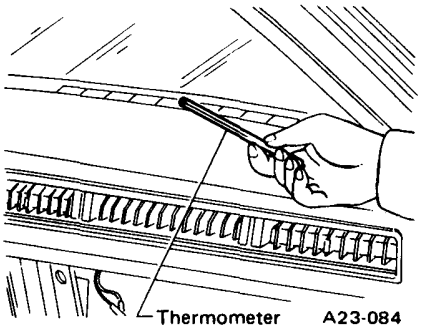

A23-084

Fig. 13-13 Measuring the outlet air temperature

c. If outlet air temperature does not rise until these temperatures, adjust the control system of water cock.

d. When poor flow of outlet air compared with other vehicles arises, check connection of defroster duct and nozzle or defroster duct and heater unit.

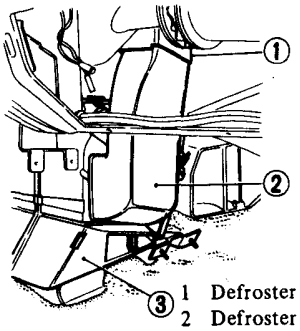

1 Defroster nozzle
2 Defroster duct
3 Heater unit

A23-085

Fig. 13-14 Checking the connection of defroster duct

Adjustment

1) Disconnect water cock rod from plastic clamp at lever A.

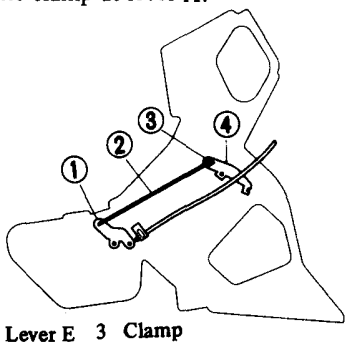

1 Lever E 3 Clamp
2 Rod 4 Lever A

A23-135

Fig. 13-15 Disconnecting the rod

2) Disconnect the cable for temperature control from the clamp at the heater unit side.

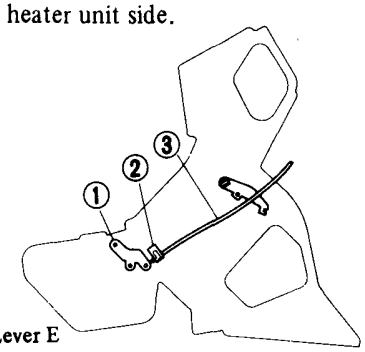

1 Lever E
2 Clamp
3 Cable

A23-136

Fig. 13-16 Disconnecting the cable

3) Set temperature control dial to COLD position.

4) Set lever E to COLD position.

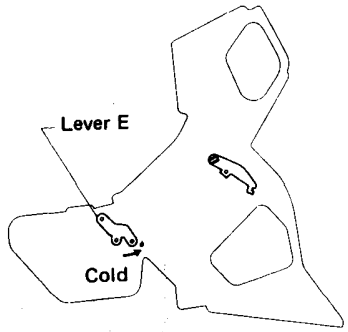

A23-137

Fig. 13-17 Setting lever E

5) After connecting the cable to lever E, connect the cable to the clamp while pulling the cable up.

Standard value G	20 mm (0.79 in)

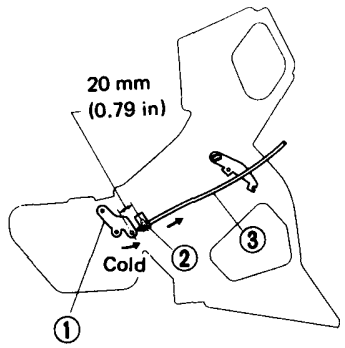

1 Lever E
2 Clamp
3 Rod

A23-138

Fig. 13-18 Connecting the cable

Downloaded from www.Manualslib.com manuals search engine

6) Set lever E at the water cock to COLD position again.
7) Set lever A to COLD position.
8) Connect water cock rod to plastic clamp at lever A.

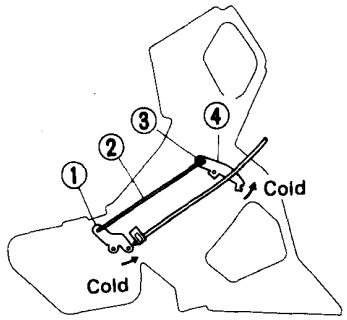

1 Lever E
2 Rod
3 Clamp
4 Lever A
A23-139

Fig. 13-19 Connecting the rod

3) Fresh Air Ventilation Lever

Check

Check air leakage as follows.
1) Set fan switch dial to OFF position, mode lever to CIRC and fresh air ventilation lever to OFF.
2) Measure the leakage at center outlet while running at a speed of 80 to 100 km/h (50 to 62 MPH).
3) In this case, if leakage exceeds 0.3 m/sec (1.0 ft/sec) through center outlet, adjust the control system.

Adjustment

1) Disconnect the cable from the clamp at the heater unit side.

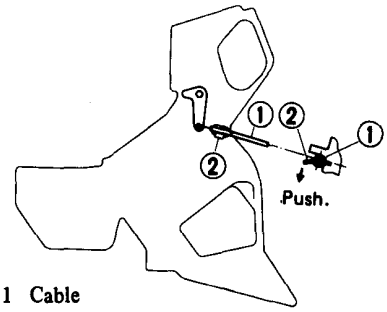

1 Cable
2 Clamp
A23-089

Fig. 13-20 Disconnecting the cable

2) Set ventilation lever to OFF position.
3) Set the linkage at the heater unit side to OFF position. (Pulling lever C up backward.)

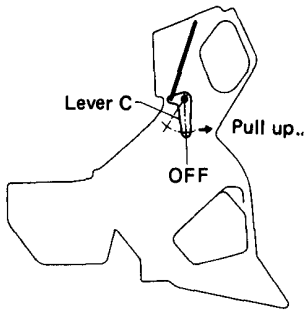

A23-075

Fig. 13-21 Setting the lever

4) After connecting the cable to lever C, connect the cable to the clamp while pulling the cable up backward.

Standard value H	29 mm (1.14 in)

1 Lever C
2 Cable
3 Clamp

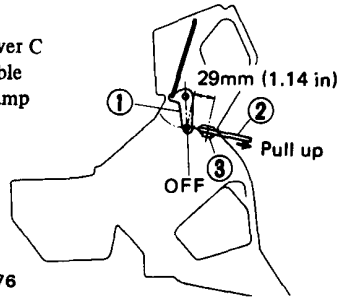

A23-076

Fig. 13-22 Connecting the cable

3. Repair for Component Parts

1) Heater Unit

Removal and disassembly

1) Disconnect ground cable from battery.
2) Remove radiator drain plug, and drain coolant.
3) Disconnect both inlet and outlet hoses from heater pipe.
4) Remove heater hose grommet from bulkhead.
5) Remove radio box or console box.
6) Remove luggage shelf and instrument panel.
7) Detach heater duct between heater unit and blower assembly.
8) Remove both defroster nozzles.
9) Remove two bolts on upper part of heater unit.
10) Lift up heater unit about 10 mm (0.39 in), and take it out backward.
11) Remove water cock.
12) Disconnect rod between left and right defroster shutters from plastic clamp at right defroster shutter.
13) Separate heater unit in two parts (left and right).
14) Take out heater core and shutters.

Assembly and installation

1) Attach heater core and shutters to cases.

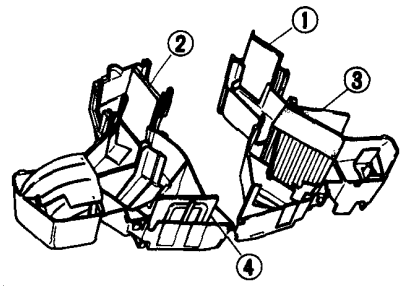

1 Ventilation shutter
2 Upper shutter
3 Air mixing shutter
4 Lower shutter
A23-068

Fig. 13-23

2) Fit two halves of unit heater case together and secure with springs.

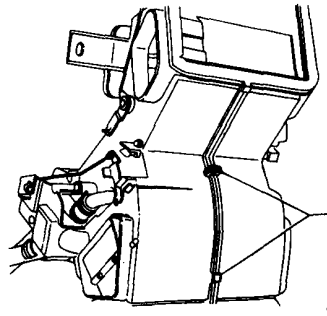

A23-146

Fig. 13-24

Downloaded from www.Manualslib.com manuals search engine

3) Connect rod between left and right defroster shutters with clamp.

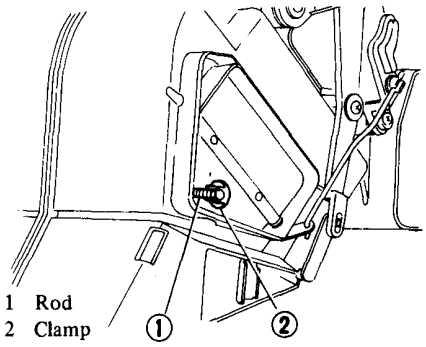

Fig. 13-25 A23-066

4) Attach water cock.
5) Install heater unit on body.

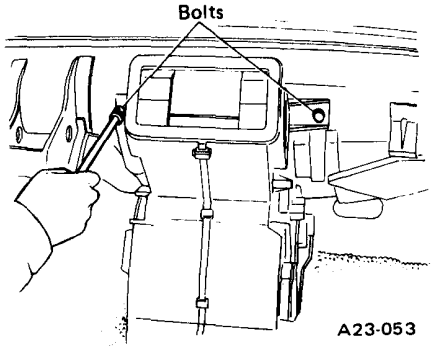

Fig. 13-26

6) Install defroster nozzles on both sides.

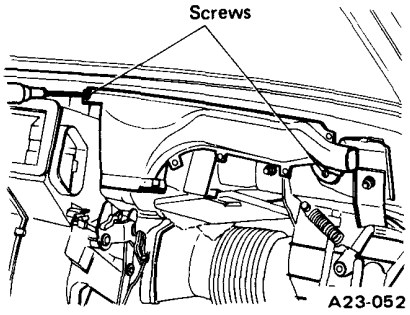

Fig. 13-27

7) Attach heater ducts between heater unit and blower assembly.
8) Install luggage shelf and instrument panel on body.
9) Attach radio box or console box.
10) Fit heater hose grommet onto bulkhead.
11) Connect both inlet and outlet hoses with heater pipe.

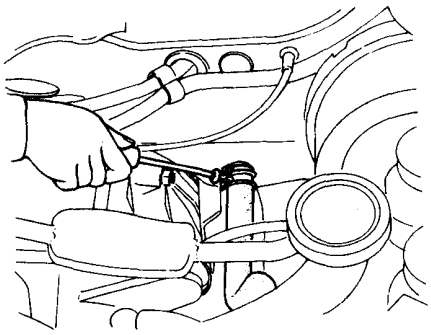

Fig. 13-28

12) Fill radiator with coolant.
13) Connect ground cable to battery.

2) Water Cock

Removal

1) Follow the same procedures 1) to 4) for "Heater Unit".
2) Remove left defroster duct from heater unit.
3) Detach water cock cover.
4) Disconnect water cock rod from plastic clamp at lever A.
5) Remove both inlet and outlet hose clamps.

NOTE:
Outlet hose clamp can be removed by twisting cotter pin counterclockwise.

6) Remove water cock by pulling it up forward.

Installation

1) Install water cock with three screws.

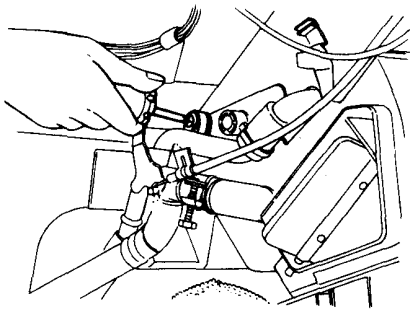

Fig. 13-29

2) Connect both inlet and outlet hoses with clamps.

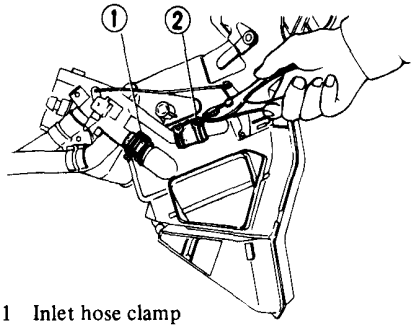

1 Inlet hose clamp
2 Outlet hose clamp A23-058

Fig. 13-30

3) Set both levers A and E to COLD position, and connect water cock rod with plastic clamp at lever A.

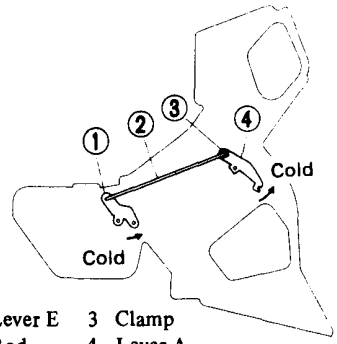

1 Lever E 3 Clamp
2 Rod 4 Lever A A23-134

Fig. 13-31

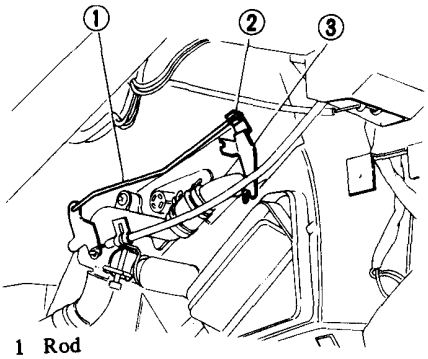

1 Rod
2 Clamp 3 Lever A A23-130

Fig. 13-32

4) Attach water cock cover.

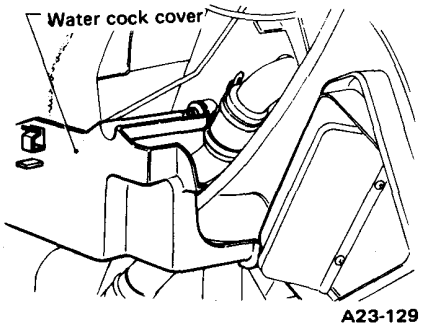

Fig. 13-33 Removing water cock cover

Downloaded from www.Manualslib.com manuals search engine

5) Attach left defroster duct.
6) Fit heater hose grommet onto bulkhead.
7) Connect both inlet and outlet hoses with heater pipe.
8) Fill radiator with coolant.
9) Connect ground cable to battery.

3) Blower Assembly

Removal and disassembly

1) Disconnect ground cable from battery.
2) Remove luggage shelf and glove box.
3) Detach heater duct from blower assembly.
4) Set mode lever to CIRC position and disconnect vacuum hose from actuator.

NOTE:
If mode lever is not set to CIRC position, it is difficult to disconnect vacuum hose.

5) Disconnect electric connector for blower motor.
6) Remove actuator from blower assembly.
7) Remove blower assembly from body.
8) Remove blower and motor, and detach blower from motor.
9) Separate blower case into two parts.

Assembly and installation

1) Install springs and intake shutter return spring onto blower case.

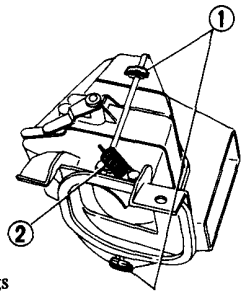

1 Springs
2 Return spring

A23-147

Fig. 13-34

NOTE:
Check the operation of intake shutter and its return spring.

2) Attach blower to motor, and install them onto blower case.

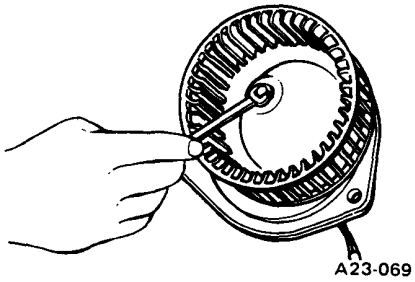

A23-069

Fig. 13-35

3) Install blower assembly onto body.

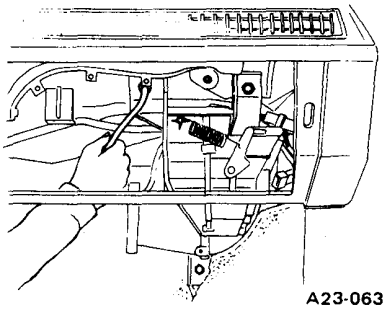

A23-063

Fig. 13-36

4) Install actuator onto blower assembly with two screws and clip.

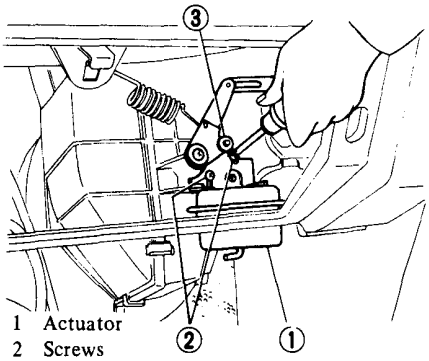

1 Actuator
2 Screws
3 Clip

A23-062

Fig. 13-37

5) Connect electric connector for blower motor.
6) Connect vacuum hose to actuator.
7) Attach heater duct to blower assembly.

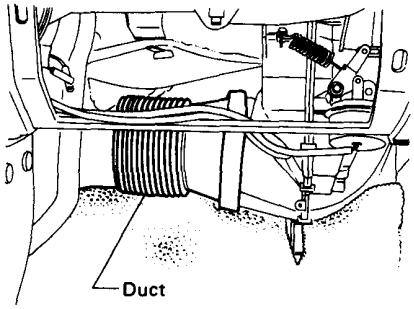

A23-061

Fig. 13-38

8) Install glove box and luggage shelf.
9) Connect ground cable to battery.

4) Control System

Removal

1) Disconnect ground cable from battery.
2) Remove radio box or console box.
3) Remove control panel from instrument panel.
4) Disconnect cables for temperature control, mode control and center ventilation from heater unit.

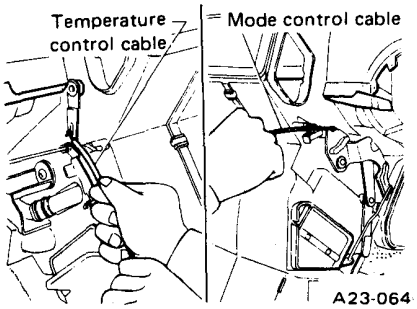

A23-064

Fig. 13-39

5) Remove control assembly, and disconnect electric wires and vacuum hoses.

Installation

1) Connect electric wires and vacuum hoses with control assembly, and then install it.

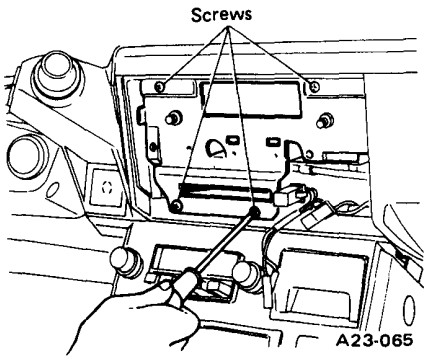

A23-065

Fig. 13-40

2) Connect cables as described in the previous item "On-car Services".
3) Attach control panel to instrument panel.
4) Install radio box or console box.
5) Connect ground cable to battery.

Downloaded from www.Manualslib.com manuals search engine

13-3. Air-Conditioning

1. Outline

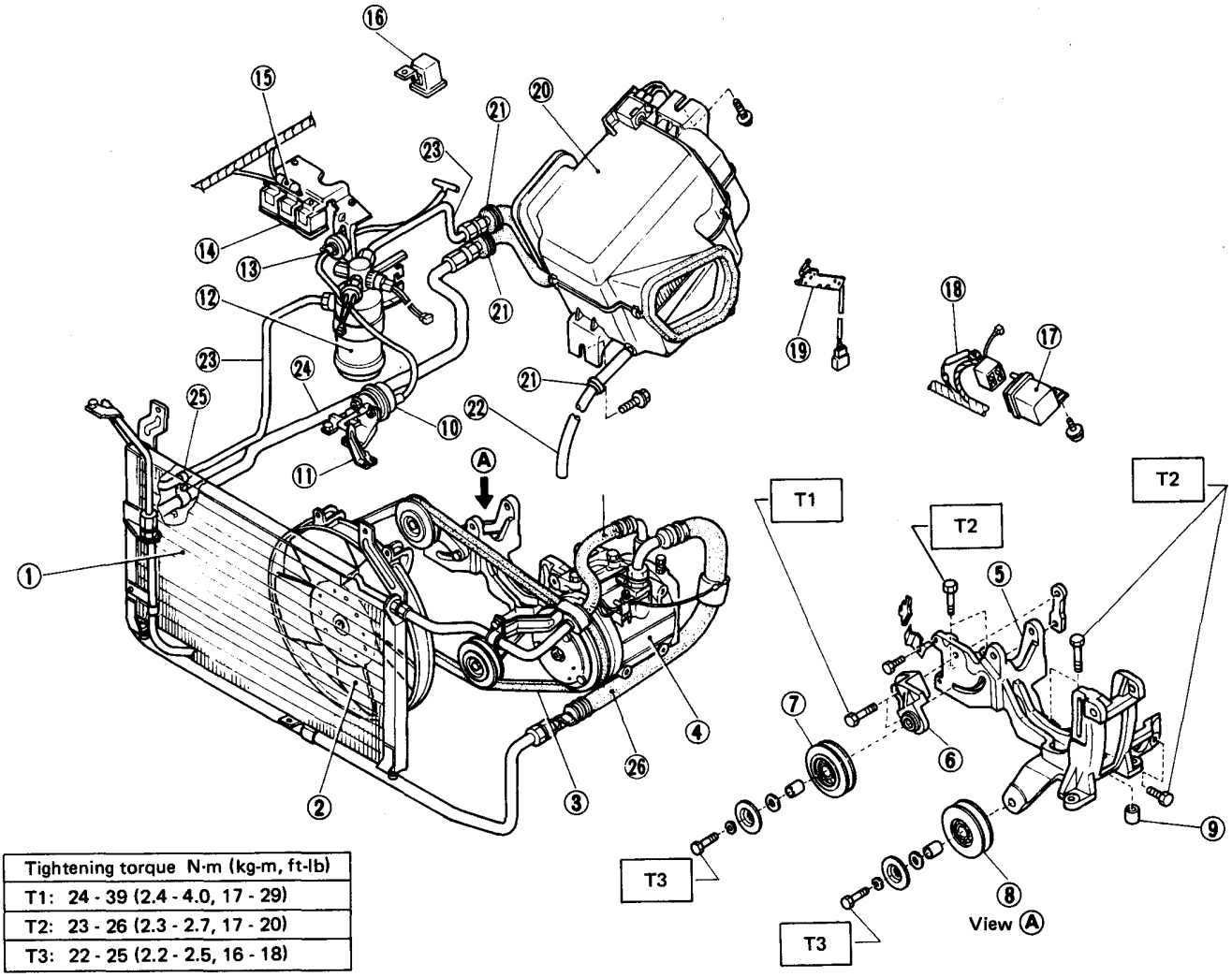

Tightening torque N·m (kg-m, ft-lb)
T1: 24 - 39 (2.4 - 4.0, 17 - 29)
T2: 23 - 26 (2.3 - 2.7, 17 - 20)
T3: 22 - 25 (2.2 - 2.5, 16 - 18)

1 Compressor
2 Condenser
3 Receiver drier
4 Condenser cooling fan (Sub-fan)
5 Actuator (F.I.C.D.)
6 Belt
7 Compressor bracket
8 F.I.C.D. lever
9 Pipe and hose
10 Pipe and hose
11 Relay
12 Tension pulley
13 Evaporator
14 Drain hose
15 Grommet
16 Grommet
17 Grommet
18 Pipe
19 Pipe
20 Clamp
21 Spacer
22 Microswitch
23 Relay
24 Fuse (A)
25 Fuse (B)
26 Relay

A26-123

Fig. 13-41 Component parts

Downloaded from www.Manualslib.com manuals search engine

1) Air Flow System

The flow of air in the system changes according to the position of the control lever, as follows:

CIRC-A/C MAX

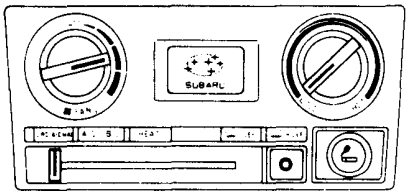

A26-007

1. Intake Shutter	Room air
2. Air Mix Shutter	Cooled air does not flow into heater core
3. Lower Shutter	Shut
4. Temp Dial	Cold
5. F.I.C.D.	Operative

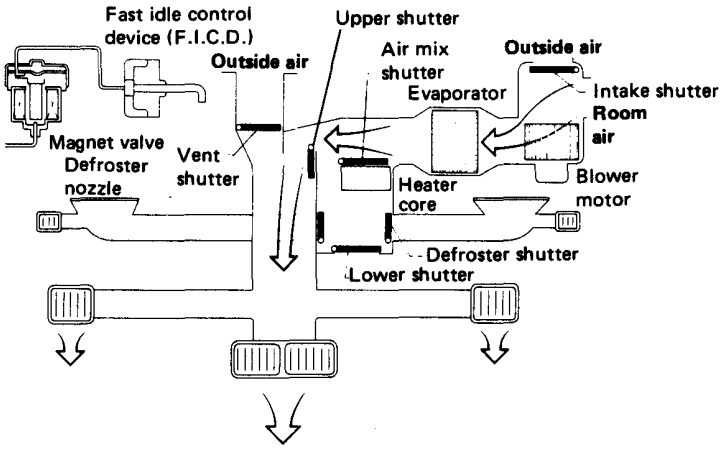

Fig. 13-42

Downloaded from www.Manualslib.com manuals search engine

A/C

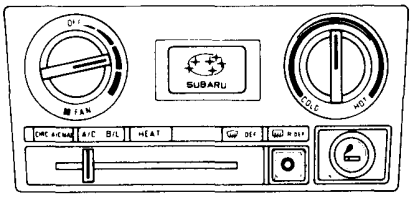

A26-010

1. Intake Shutter	Outside air
2. Air Mix Shutter	Cooled air flow into heater core
3. Lower Shutter	Shut
4. F.I.C.D.	Operative

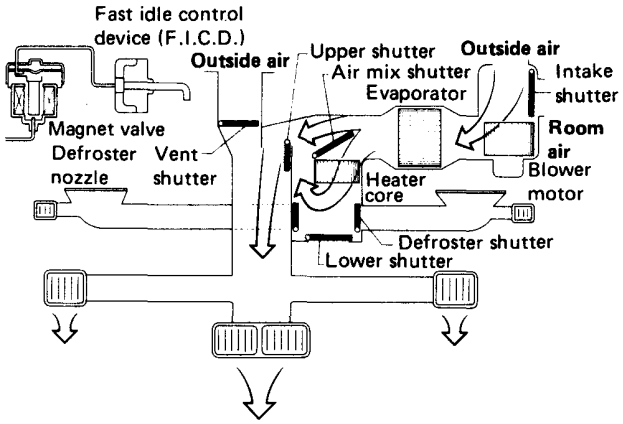

A26-012

Fig. 13-43

B/L (Bi-level)

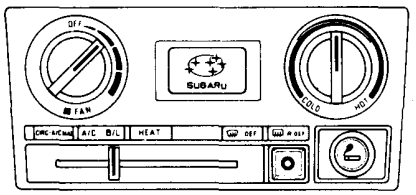

A26-013

1. Intake Shutter	Outside air (Fresh air)
2. Lower Shutter	Open
3. F.I.C.D.	Inoperative

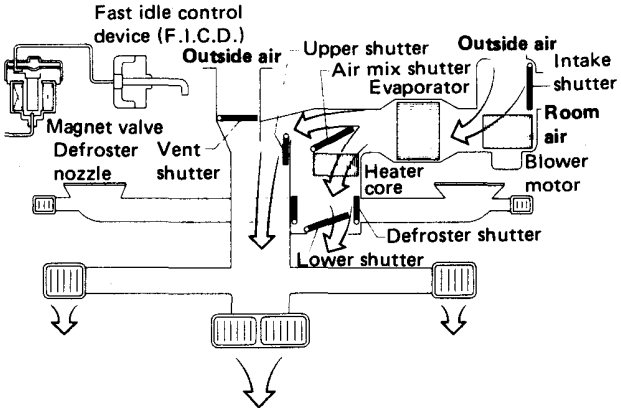

A26-015

Fig. 13-44

Downloaded from www.Manualslib.com manuals search engine

HEAT

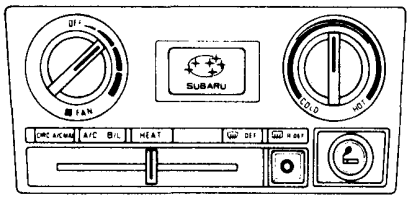

A26-016

1. Intake Shutter	Outside air (Fresh air)
2. Lower Shutter	Open
3. Defroster Shutter	Shut
4. F.I.C.D.	Inoperative

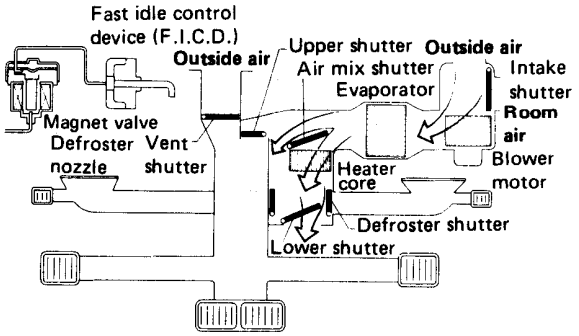

A26-018

Fig. 13-45

DEF (Defrosting)

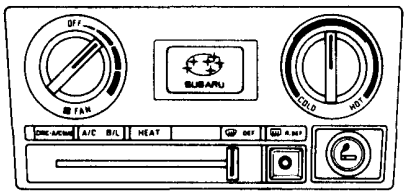

A26-019

1. Intake Shutter	Outside air (Fresh air)
2. Lower Shutter	Shut
3. Defroster Shutter	Open
4. F.I.C.D.	Operative

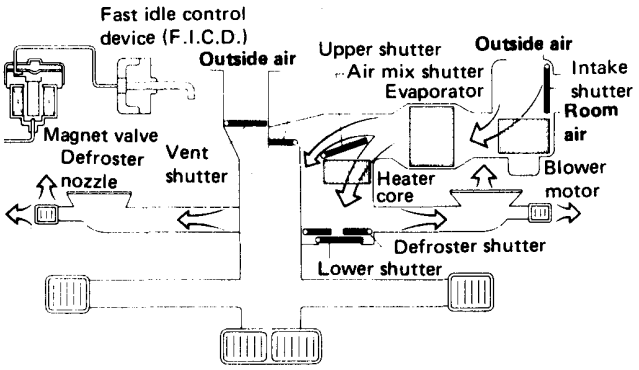

A26-021

Fig. 13-46

Downloaded from www.Manualslib.com manuals search engine

2) Vacuum System

The vacuum system's composition is shown below. It utilizes engine vacuum to operate the lever of the carburetor linkage (F.I.C.D.) and the changeover shutter in order to intake internal compartment or exterior air.

1) When the air conditioner switch is turned on, the air valve communicates between the source and the actuator sides to operate the actuator (F.I.C.D.). This pulls the lever (F.I.C.D.), which causes idling speed to increase until the set value (950 ± 50 rpm) is reached.

2) If the control lever is CIRC-A/C. MAX., the vacuum switch closes between the source and actuator sides, thus passenger compartment air alone is drawn into the unit.

If the mode lever is in a different position, the vacuum switch is open between both sides, so the actuator operates, and exterior air is introduced.

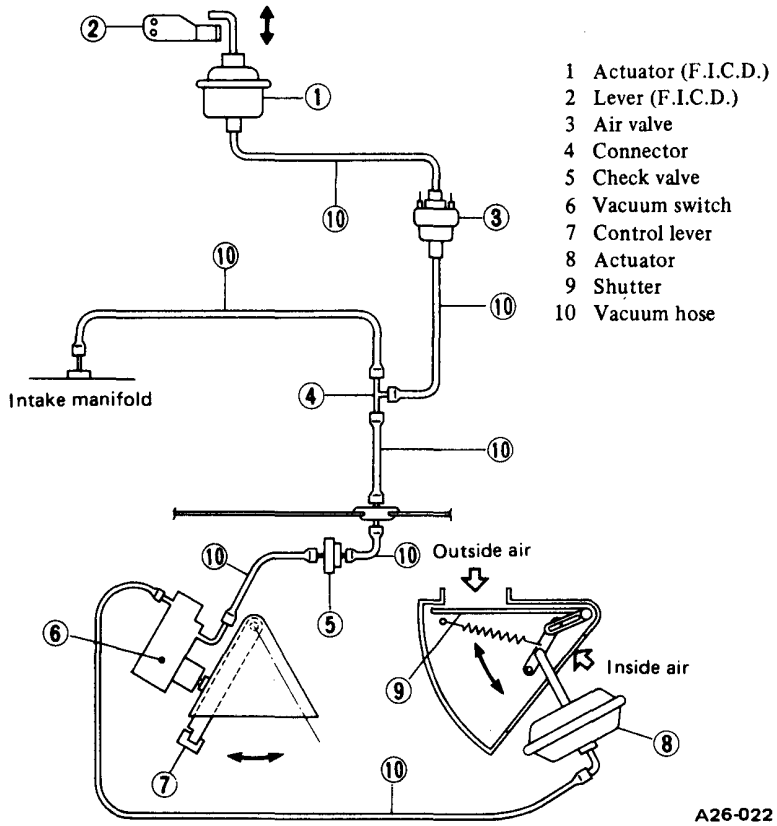

1 Actuator (F.I.C.D.)
2 Lever (F.I.C.D.)
3 Air valve
4 Connector
5 Check valve
6 Vacuum switch
7 Control lever
8 Actuator
9 Shutter
10 Vacuum hose

Fig. 13-47

3) Electrical System

1) When the mode (control) lever is set at "CIRC-A/C. MAX", "A/C", or "DEF", the air conditioner switch (microswitch) will be turned on. In this condition, when the blower switch is turned on, the blower relay, air conditioner relay, and sub-fan relay will activate. This in turn causes the blower motor, air valve (F.I.C.D.), compressor clutch, and sub-fan to activate.

2) In addition, activating the pressure switch (main fan control) or the thermo switch will cause the main fan to activate.

3) With the main fan in operation, turning on the headlights will cause the condenser fan (sub-fan) to stop.

4) When either the low pressure switch or the thermostat activates, all air conditioner circuits except the blower motor will deactivate. In this condition, however, when the temperature of the coolant in the radiator is high enough and the thermo switch turns on, the radiator fan (main fan) will activate.

Downloaded from www.Manualslib.com manuals search engine

Wiring harness installation and electrical devices

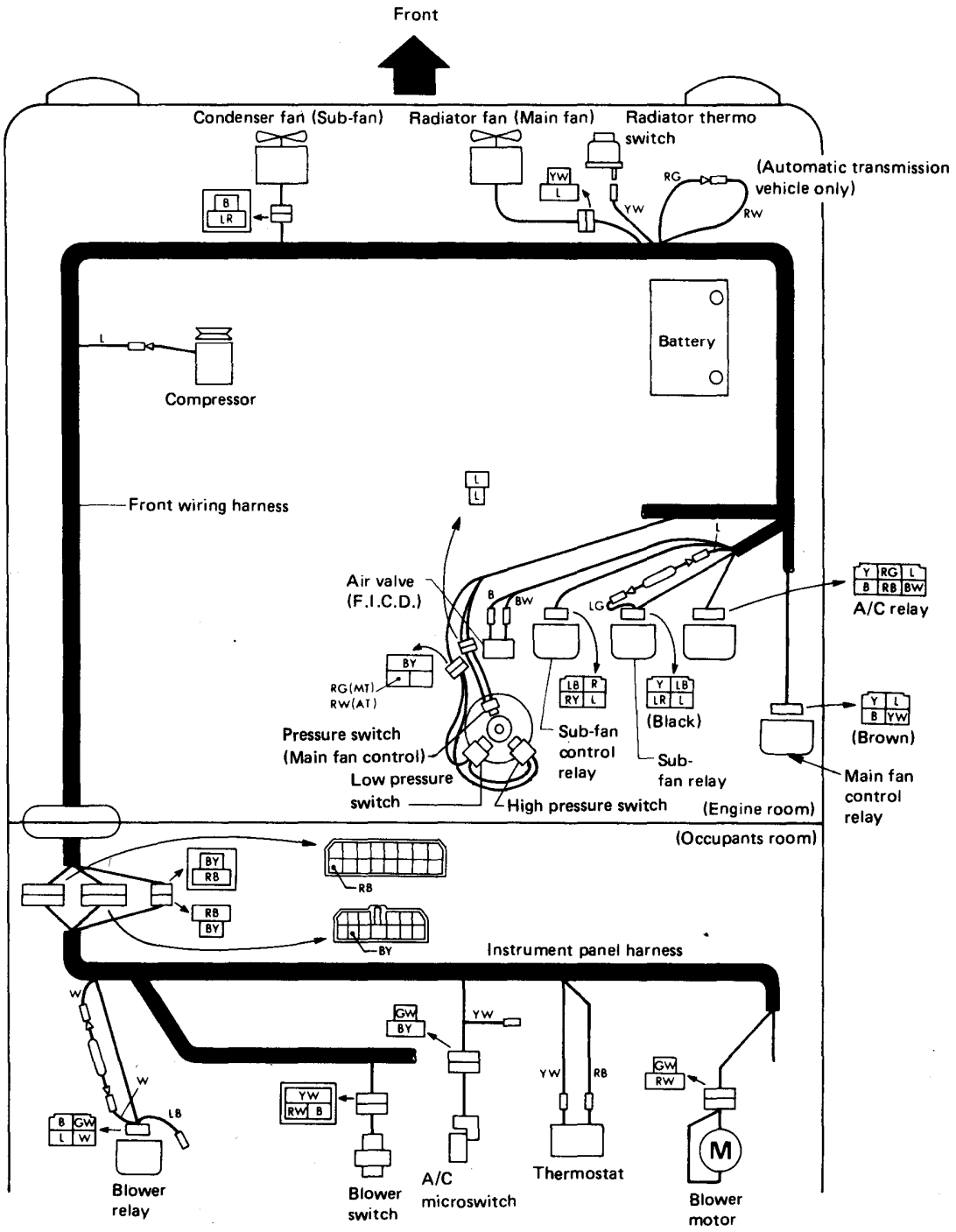

A26-113

Fig. 13-48

Downloaded from www.Manualslib.com manuals search engine

Wiring diagram

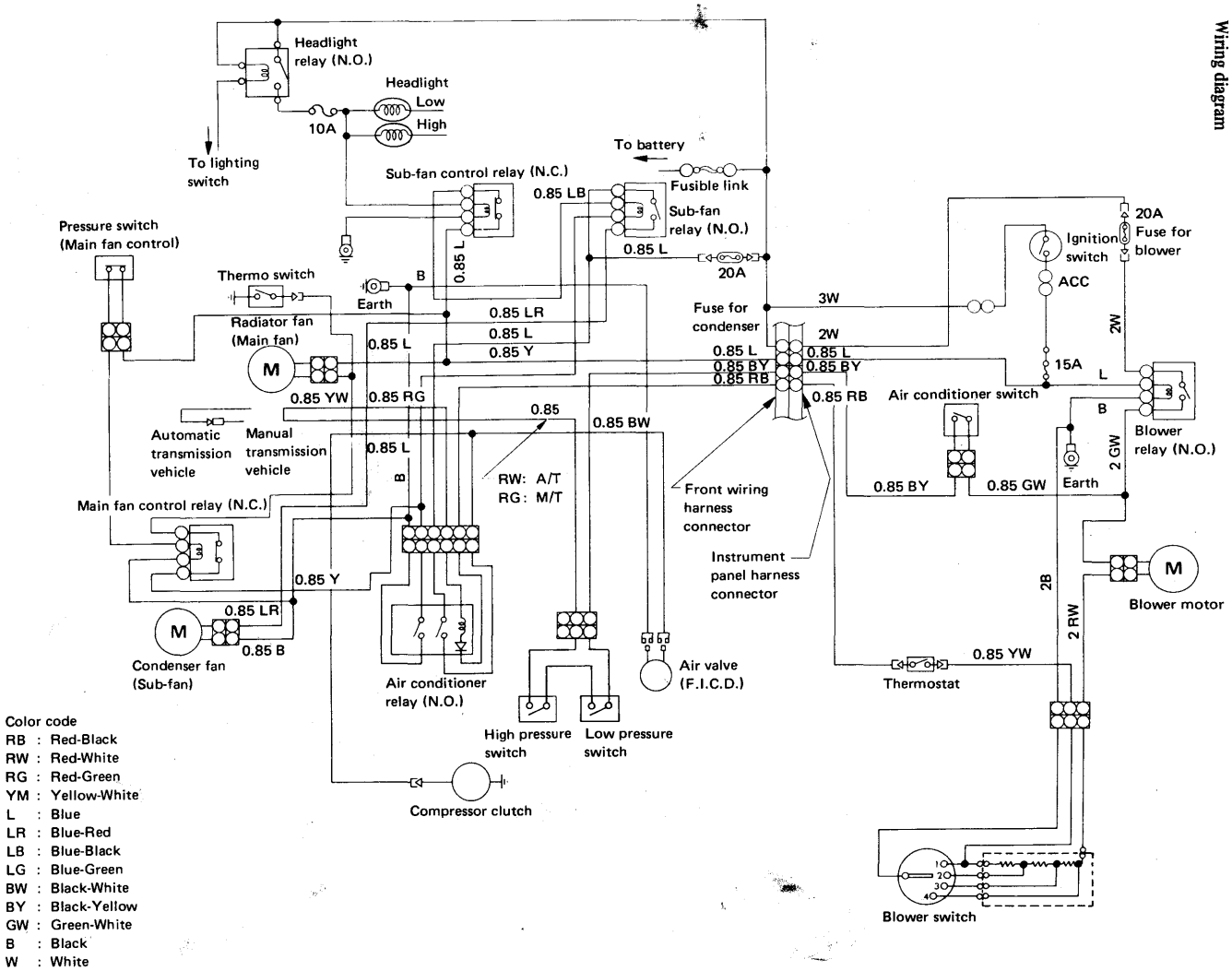

Fig. 13-49

A26-124

Downloaded from www.Manualslib.com manuals search engine

2. On-car Services

1) Refrigerant R-12

The refrigerant used in the air conditioner is generally called "Refrigerant-12 (R-12)". No other refrigerant than the above refrigerant should be used. This refrigerant is usually available in a small can or a cylinder. In either case, it is liquefied under high pressure in the container.
Refrigerant evaporates easily (has a low evaporation point) and, moreover, since the latent heat of the refrigerant is large, it can absorb a large amount of heat when evaporating. Extreme care must be exercised when handling the refrigerant.

2) Compressor Oil

The "SUNISO 5GS" refrigeration lubricant should be used to assure the successful compressor operation. Use of oils other than recommended or mixing of the oil with other oils would cause chemical reaction or lead to lowered viscosity or deficient lubrication.
The oil absorbs moisture as it contacts the air. This points out the need for care not to expose it to atmosphere for an extended period of time.

NOTE:

a. The oil should not be transfused from a container into another, as the failure will possibly cause moisture to mix with the oil.
b. The used oil should not be returned into a container.
c. The oil should not be used if its state of preservation is not clear enough.

3) Maintenance

Periodical maintenance and season-in inspection

Both periodical maintenance and season-in inspection are most essential to enable the air conditioner to give full performance.
Perform the following checks.
1) Start engine and check refrigerant level through sight glass on receiver drier. For details, refer to relative topics under "Refrigerant Level Check".
2) Check the entire system for sign of refrigerant leaks. Refer to relative topics under "Checking for Leaks" and "Refrigerant Leaks".
If any trace of oil is noted at and around connection fittings, it is a sure indication that refrigerant is leaking. This condition can be corrected easily by retightening the joints. If any joint on line is suspected of small amount of leakage, use a leak detector to locate leaking points.
3) Check compressor drive belts for proper deflection.

Season-off

Observe the following maintenance tips to allow the air conditioner to operate normally in the next season.
1) Keep the entire system free from refrigerant leakage by periodically checking for refrigerant gas leak even out of season.
2) Turn the compressor for 10 minutes at least once a month by running the engine at 1,500 rpm.

4) General Service Instruction

The servicing of the air conditioner should be carried out only by well-trained servicemen. This chapter describes essential points of servicing.

- If a large amount of dirt and sand enter the system, they will be carried with refrigerant and may clog the system or scratch rotating parts. This points out the need for care in servicing the system. That is, disconnecting joints should be carried out in a clean place.
- Water should not be allowed to get inside the system. The refrigerant does not readily mix with water. However, the presence of even a minute amount of water will cause a chemical reaction at high temperature which will in turn produce hydrochloric acid (HC1). Since hydrochloric acid is highly corrosive to metals, the aluminum and copper piping, etc. will become corroded and the refrigeration system will become clogged.
- Water in the system will ice the orifice when the high pressure refrigerant is changed to low pressure refrigerant by expansion valve, etc., and will obstruct the refrigerant flow.

5) Safety Precautions

1) Since direct contact of the liquid refrigerant with your skin will cause frostbite, always be careful when handling the refrigerant. **Wear gloves or wrap a piece of cloth around service valve to protect your fingers against frostbite by refrigerant.** If any of the refrigerant should get into your eyes when charging the refrigerant, splash your eyes with cool water to raise the temperature gradually. Apply a protective film to the eye to avoid infection. Do not rub your eyes. Consult an eye specialist. **Always wear goggles or glasses to protect your eyes when working around the system. Should refrigerant strike your body, splash on cool water and apply a protective film.**
2) The refrigerant service container has a safe strength. However, if handled incorrectly, it will explode. **Therefore, always follow the instructions on the label. In particular, never store it in a hot location [above 52°C (126°F)] or drop it from a high height.**
3) The refrigerant gas is odorless and colorless and breathing may become difficult due to the lack of oxygen. Since the refrigerant gas is heavier than air and will lay close to the floor, be especially careful when handling it in small, confined spaces.
4) The refrigerant itself is nonflammable. **However, a toxic gas (phosgene gas) is produced when it contacts fire and special care is therefore required when checking for leaks in the system with a halide torch.**
5) Do not steam clean on the system, especially condenser since excessively high pressure will build up in the system, resulting in explosion of the system.
The above precautions are essential in handling of Refrigerant-12, and their strict observation requires sufficient training. Therefore, it is of first importance that any other personnel

Downloaded from www.Manualslib.com manuals search engine

than a well-trained serviceman should not be allowed to handle the refrigerant.

6) Evacuating and Charging System

During servicing, use caution to keep air from getting into refrigerant. When air enters the system, all refrigerant must be evacuated from system prior to charging new refrigerant. Air in refrigerant has the following deleterious effects:

1) Since the condensation temperature of the air is extremely low, the air will not be condensed when refrigerant gas is condensed in the condenser, and the air will thus remain in gaseous form. Consequently, the effective thermal transmission area of condenser for refrigerant gas will be reduced and refrigerant gas to be condensed will be reduced. The pressure rise will become proportional to the volume of the air in system.

2) When air and refrigerant are mixed in system, a chemical reaction will be produced and hydrochloric acid which will adversely affect the aluminum, copper, iron, and other materials in system may be generated.

Handling manifold gauge

The pressure at the high- and low-sides of system should be measured when evacuating and charging refrigerant and when diagnosing trouble in the system. The manifold gauge is used for these purposes. A manifold gauge has two pressure gauges; a low pressure gauge and a high pressure gauge. These gauges are connected to the high- and low-side service valves of system through flexible charging hoses. The construction of manifold gauge is shown in Figure.

When valve stem is fully screwed, the valve is front-seated and valve path and the center path are blocked. When valve stem is backed off, the paths are opened.

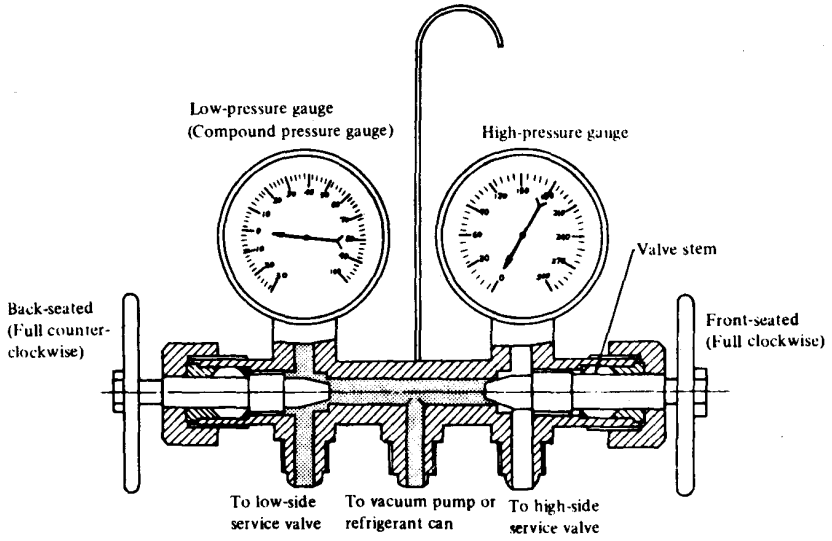

Fig. 13-50

(Connection to service valve)

1) Fully close both valves of manifold gauge. Connect high- and low-pressure charging hoses to manifold gauge.

2) Remove caps from service valves. Connect high- and low-pressure charging hoses to service valves in system. The refrigerant gas will be discharged since check valve is open when pressing charging hose onto service valve.

3) Next, loosen the connection fitting of charging hose at manifold gauge side for 2 to 3 seconds to purge any air inside charging hose by the pressurized gas in system.

(Disconnection from service valve)

1) Fully close both valves of manifold gauge.

2) Disconnect two charging hoses from service valves. At this time, the gas will be discharged until check valve is closed. Therefore, disconnect hose quickly.

CAUTION:
Work with fingers protected with cloth against frostbite by refrigerant.

Handling service valve

An automatic check valve is built into service valve. When this valve presses against the connection fitting, that is, when charging hose is connected to service valve, the valve is open. When charging hose is disconnected, the valve is closed automatically. Always observe the following usage precautions:

1) Always install valve cap after using service valve.

When high speed operation is performed without valve cap, a negative pressure will gradually build up at the low pressure side of system and air may be sucked in. In addition, dirt and dust will easily enter the valve resulting in foreign matter entering the system.

2) Check valve will be half opened during connection and disconnection of charging hoses and refrigerant will be forcefully discharged. Therefore, connect and disconnect charging hoses quickly while pressing flare nut of charging hose against service valve.

CAUTION:
Work with fingers protected with cloth against frostbite by refrigerant.

3) Since close contact between the thread of valve cap and the thread of service valve will prevent gas leakage, keep these sections clean and free of scratches and damage.

Downloaded from www.Manualslib.com manuals search engine

4) Since packing of charging hose will be lost during long use, always check packing prior to installing charging hose.

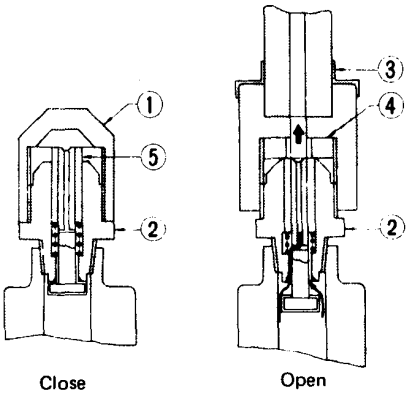

1 Cap
2 Service valve
3 Charging hose
4 Packing
5 Check valve

A26-029

Fig. 13-51

Handling can tap

A wide variety of can taps are available. The following procedures apply to conventional can taps.
For the correct usage, refer to the manufacturer's instructions.

CAUTION:
Use can tap of good quality.

1) Connect charging hose to the center fitting of manifold gauge. At this time, confirm that both stems are fully turned in (front-seated).
2) Turn can tap handle fully counterclockwise so that the needle is pulled up.
3) Attach can tap to refrigerant can firmly.
4) Turn can tap handle fully clockwise to make a hole in refrigerant can.
5) Turn the handle fully counterclockwise to raise the needle. Refrigerant gas will flow up to the center fitting of manifold gauge.
6) Loosen the connection at the center fitting of manifold gauge for a few seconds to purge air inside charging hose.

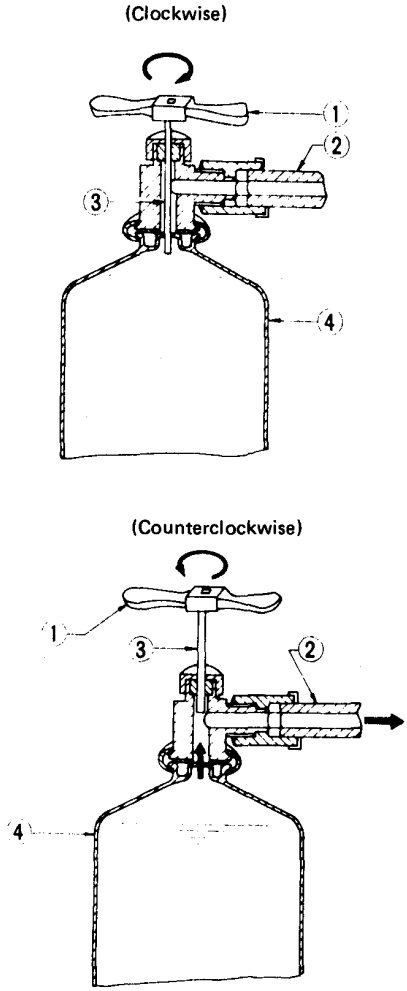

1 Can tap handle
2 Charging hose
3 Needle
4 Refrigerant can

A26-030

Fig. 13-52

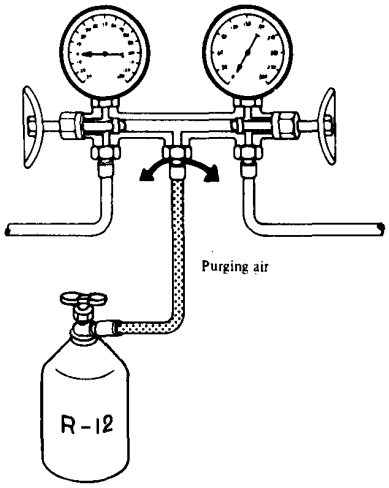

A26-031

Fig. 13-53

Discharging system

The pressurized refrigerant gas inside system must be discharged to a pressure approaching atmospheric pressure prior to evacuating refrigerant inside system. This operation should be made to permit safe removal when replacing system components.
1) Close high- and low-pressure valves of manifold gauge fully.
2) Connect two charging hoses of manifold gauge to their respective service valves.
3) Open both manifold gauge valves slightly and slowly discharge refrigerant from system.

NOTE:
Do not allow refrigerant to rush out. Otherwise, compressor oil will be discharged along with refrigerant.

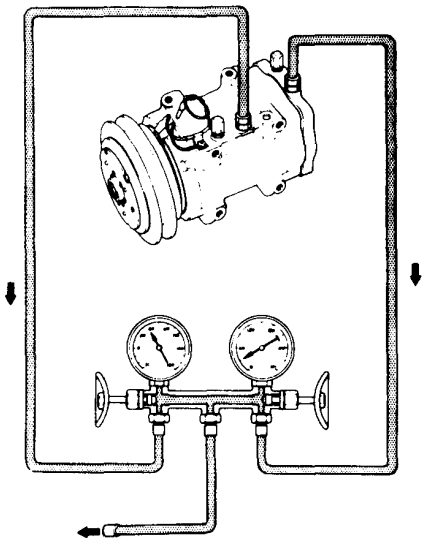

Fig. 13-54

A26-032

Downloaded from www.Manualslib.com manuals search engine

CAUTION:

Protect fingers with cloth against frostbite by refrigerant when connecting the charging hose to the service valve or disconnecting it therefrom.

Evacuating system

1) Connect high- and low-pressure charging hoses of manifold gauge to their respective service valves of system and discharge refrigerant from system. Refer to "Discharge System".
2) When refrigerant has been discharged to a pressure approaching atmospheric pressure, connect center charging hose to a vacuum pump.
3) Close both valves of manifold gauge fully. Then start vacuum pump.
4) Open low-pressure valve and suck old refrigerant from system.
5) When low-pressure gauge reading has reached to approximately 66.7 kPa (500 mmHg, 19.69 inHg), slowly open high-pressure valve.
6) When pressure inside system has dropped to 94.6 kPa (710 mmHg, 27.95 inHg), fully close both of valves of manifold gauge and stop vacuum pump. Let stand it for 5 to 10 minutes in this state and confirm that the reading does not rise.

NOTE:

a. The low-pressure gauge reads lower by 3.3 kPa (25 mmHg, 0.98 inHg) per a 300 m (1,000 ft) elevation. Perform evacuation according to the following table.

Elevation m (ft)	Vacuum of system kPa (mm Hg, in Hg)
0 (0)	94.6 (710, 27.95)
300 (1,000)	91.3 (685, 26.97)
600 (2,000)	88.0 (660, 25.98)
900 (3,000)	84.6 (635, 25.00)

NOTE:
Values show readings of the low-pressure gauge.

b. The rate of ascension of the low-pressure gauge should be less than 3.3 kPa (25 mmHg, 0.98 inHg) in five minutes.

If the pressure rises or the specified negative pressure can not be obtained, there is a leak in the system. In this case, immediately charge system with refrigerant and repair the leak described in the followings.
(1) Confirm that both valves of manifold gauge are fully closed and then disconnect center charging hose from vacuum pump.
(2) Connect center hose to can tap in place of vacuum pump. Attach refrigerant can to can tap and pass refrigerant to manifold gauge.
(3) Loosen the connection of center fitting of manifold gauge to purge air from center hose.
(4) Open low-pressure valve of manifold gauge and charge refrigerant into system. After one can [about 0.4 kg (0.9 lb)] of refrigerant has been charged into system, close low-pressure valve.
(5) Check for refrigerant leakage with a leak detector. Repair any leakages found. Refer to "Checking for Leaks" and "Refrigerant Leaks".
(6) Confirm that both valves of manifold gauge are fully closed and then change center charging hose from can tap to vacuum pump.
(7) Open high- and low-pressure valves and operate vacuum pump to such refrigerant from system. When the pressure in system has dropped to 94.6 kPa (710 mmHg, 27.95 inHg), fully close both valves of manifold gauge.
7) The above operation completes evacuation of system. Next, charge refrigerant. Refer to "Charging Refrigerant".

Evacuating system - First step

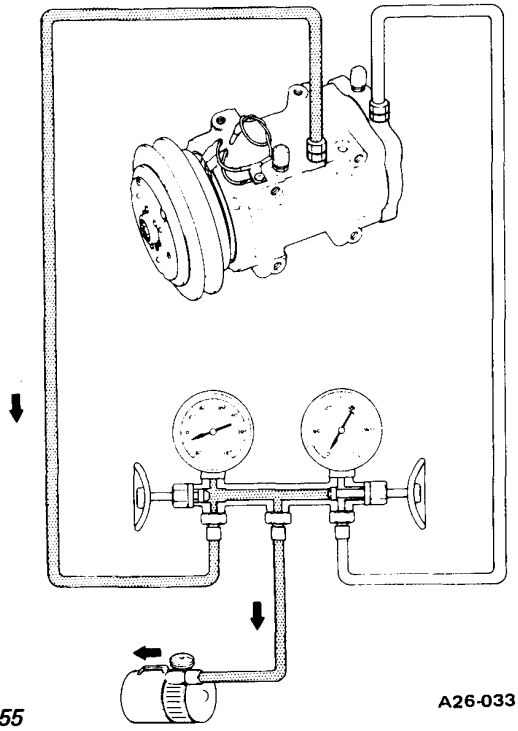

A26-033

Fig. 13-55

Evacuating system - Second step

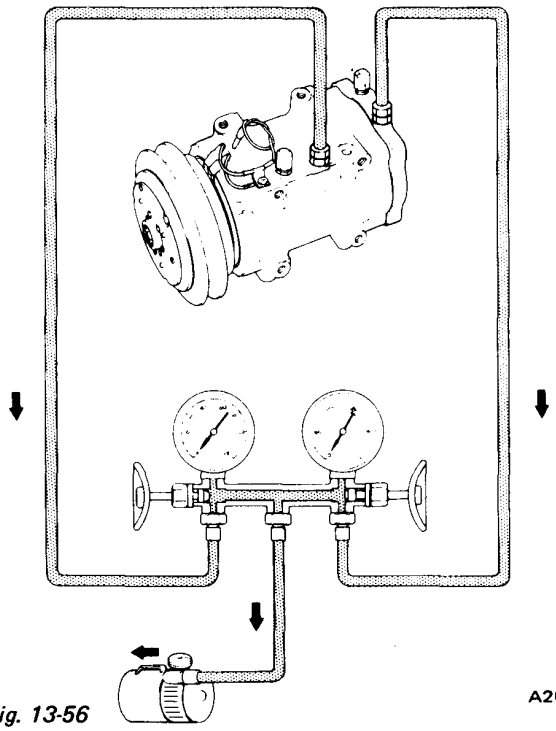

A26-034

Fig. 13-56

Downloaded from www.Manualslib.com manuals search engine

Charging refrigerant

1) Install manifold gauge to system. Refer to "Handling Manifold Gauge".

NOTE:

a. Be sure to purge air from the high- and low-pressure charging hoses.

b. If air is mixed with refrigerant gas in system, evacuation of system should be performed. Refer to "Evacuating System".

2) Attach center charging hose of manifold gauge to refrigerant can through can tap. Break seal of refrigerant can to allow refrigerant to enter manifold gauge. Loosen charging hose at the center fitting of manifold gauge and purge air from inside charging hose. Refer to "Handling Can Tap".

3) Open high- and low-pressure valves of manifold gauge and charge refrigerant into system.

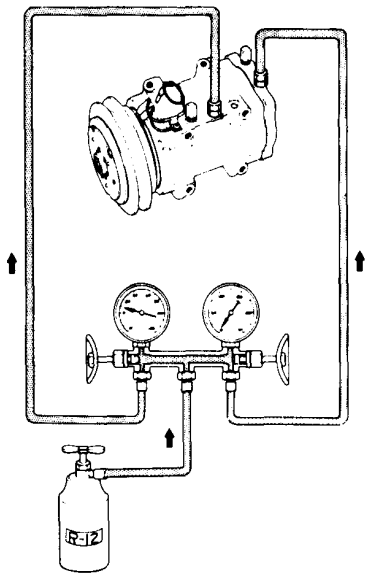

A26-035

Fig. 13-57

NOTE:

a. When refrigerant charging speed is slow, immerse refrigerant can in water heated to a temperature of about 40°C (104°F). However, note that this is dangerous when water is hot. See Figure 13-58.

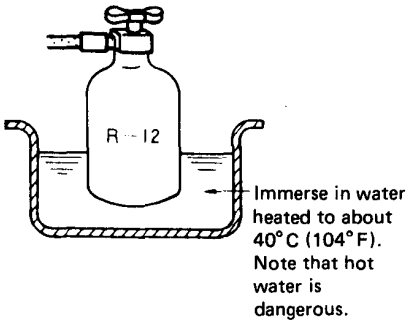

Fig. 13-58 A26-036

CAUTION:

a. Under any circumstances the refrigerant can must not be warmed in water heated to a temperature of over 52°C (126°F).

b. A blow torch or stove must never be used to warm up the can.

c. When charging liquefied refrigerant into the system with the can turned upside down to reduce charging time, charge it only through high pressure valve, but not through low-pressure valve.

After completion of charging, the compressor should always be turned several times manually.

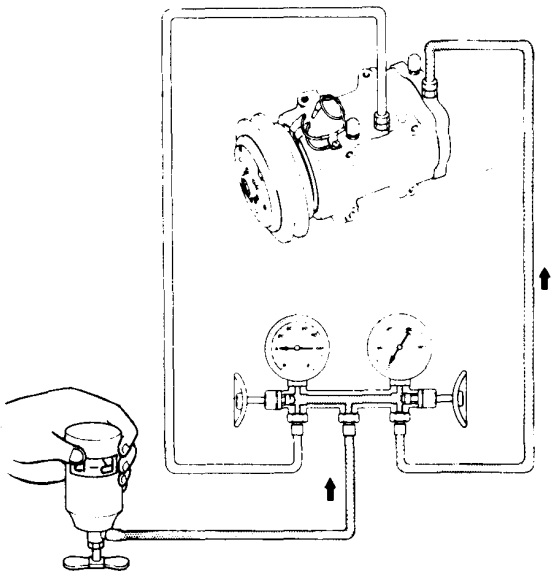

A26-037

Fig. 13-59

4) If refrigerant charging speed slows down, charge it while running the compressor for ease of charging. After having taken the steps up to (3) above, proceed with charging in the following order.

(1) Shut off high pressure valve of manifold gauge.

CAUTION:

Never charge refrigerant through high pressure side of system since this will force refrigerant back into refrigerant can and can may explode.

Downloaded from www.Manualslib.com manuals search engine

(2) Run the engine at idling speed.
(3) Set temperature control dial and fan switch at maximum cool and maximum speed respectively.

(4) Charge refrigerant while controlling low-pressure gauge reading at 275 kPa (2.8 kg/cm^2, 40 psi) or less by turning in or out low-pressure valve of manifold gauge.

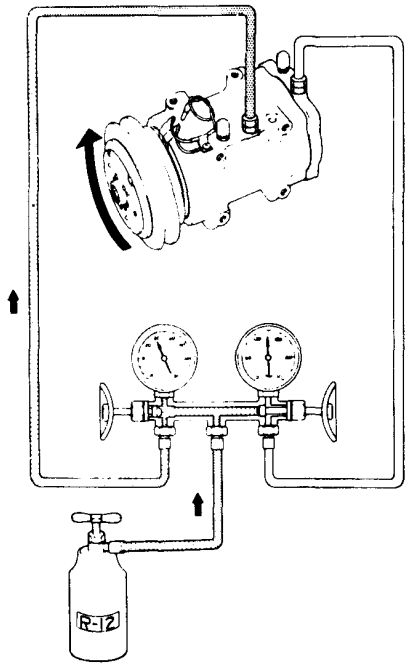

A26-038

Fig. 13-60

5) When refrigerant can is empty, fully close both valves of manifold gauge and replace refrigerant can with a new one.
Before opening manifold gauge valve to charge refrigerant from new can, be sure to purge air from inside charging hose.
6) Charge the specified amount of refrigerant into system by weighing charged refrigerant with scale. Overcharging will cause discharge pressure to rise.

NOTE:
Measure the amount of charged refrigerant with a scale.
Make a note of the amount charged from can.

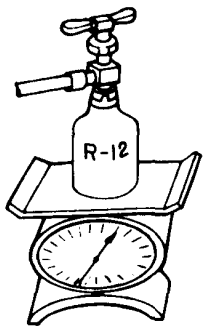

A26-039

Fig. 13-61

Refrigerant capacity

Unit: kg (lb)

Refrigerant	Minimum	Maximum
R-12	0.74 (1.63)	0.79 (1.74)

NOTE:
The presence of bubbles in sight glass of receiver drier is an unsuitable method of checking the amount of refrigerant charged in system. The state of the bubbles in sight glass should only be used for checking whether the amount of charged refrigerant is small or not. The amount of charged refrigerant can be correctly judged by means of discharge pressure. Refer to "Refrigerant Level Check".

7) After the specified amount of refrigerant has been charged into system, close manifold gauge valves. Then detach charging hoses from service valves of system. Be sure to install valve cap to service valve.
8) Confirm that there are no leaks in system by checking with a leak detector.
Refer to "Checking for Leaks".

NOTE:
Conducting a performance test prior to removing manifold gauge is a good service operation. Refer to "Performance Test".

Oil separator

The Oil Separator Kit is used to efficiently withdraw the oil in the refrigeration system (that is, to separate oil and refrigerant). If an excessive quantity of oil is charged in the system, or if the quantity of oil in the system is unknown, adjust the quantity of oil in the system to specification, proceeding as follows:
1) Discharge air conditioning system. (Refer to "Discharging System".)
2) Using two special flexible hoses and double union in Oil Separator Kit connect oil separator between compressor discharge side and condenser, as shown.
3) Evacuate and charge system (Refer to "Evacuating and Charging System.")
4) Fully open all windows or all doors of car.
5) Operate compressor at engine idling with air conditioner set for maximum cooling and high fan speed.

NOTE:
Never allow engine speed to exceed idling speed.

Downloaded from www.Manualslib.com manuals search engine

6) Observe oil separator oil level gauge. If rise of oil level has stopped, immediately stop compressor operation. (This indicates that oil has been withdrawn.)

NOTE:

a. Do not continue oil withdrawal operation more than 10 minutes.

b. In some cases, fluid refrigerant may be mixed with oil, causing unusual rise of oil level. In such a case, stop compressor operation after ten minutes of withdrawal operation.

7) Discharge system. (Refer to "Discharging System.")

8) Disconnect oil separator, two flexible hoses and double union from system.

9) Connect refrigerant lines to original positions.

10) Disconnect low flexible hose from compressor suction valve.

11) Add 120 ml (4.1 US fl oz, 4.2 Imp fl oz) of new compressor oil from compressor suction valve.

After charging, rorate compressor clutch with hand 5 to 10 turns.

12) Connect low flexible hose to compressor suction valve. Evacuate and charge system. (Refer to "Evacuating System and Charging Refrigerant".)

13) Conduct leak test and performance test.

14) Gradually loosen drain cap of oil separator to release residual pressure. Remove cap and drain oil.

15) To prevent formation of rust and intrusion of moisture or dust, perform the following before placing oil separator kit into storage.

(1) Cap each opening of two flexible hoses and double union securely.

(2) Cap oil separator, evacuate it from service valve, and charge refrigerant.

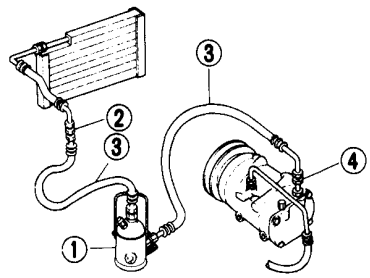

1 Oil separator
2 Double union
3 Flexible hose [1.5 m (4.9 ft)]
4 Connector pipe

ST-182

Fig. 13-62

7) Checking for Leaks

Conduct a leak test whenever leakage of refrigerant is suspected and when conducting service operations which are accompanied by disassembly or loosening of connection fittings.

Refrigerant is a colorless, odorless gas and leakage from system is difficult to detect. Accordingly, the use of a leak detector facilitates check for leaks. Two methods of checking are available; one employs a halide leak detector which burns propane gas or butane gas and the other is an electric type leak detector.

Halide leak detector

Since the propane leak detector and butane leak detector are the same in respect to their operation, this section describes the operation of the propane leak detector.

The copper screen is heated by the burning of propane. Refrigerant gas decomposes to color the flame when it contacts the heated screen. The gas to be checked is drawn into the sampling tube and sent out to the burner. A refrigerant leak can clearly be detected by variations in the color of the flame.

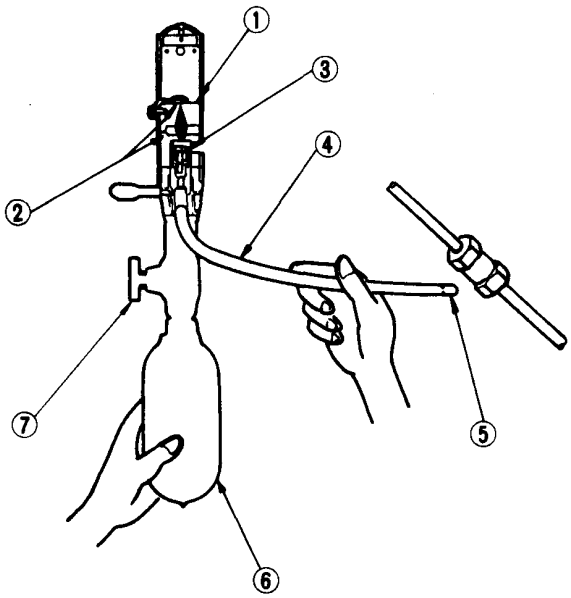

1 Copper reaction plate
2 Flame adjusting lines
3 Burner
4 Sampling tube
5 Strainer
6 Gas bomb
7 Flame adjuster

A26-041

Fig. 13-63

Downloaded from www.Manualslib.com manuals search engine

	Propane type	Butane type
NO LEAK	Greenish blue	Pale blue
SMALL LEAK	Yellow	Bright blue
LARGE LEAK	Purple	Vivid green

1) Discharge refrigerant in one or two seconds to ascertain that system has a sufficient pressure needed for leak detection. Charge with 0.4 kg (0.9 lb) of refrigerant, if necessary.
2) Light leak detector. Adjust the height of the flame between flame adjusting lines at the top and bottom of combustion tube. A reaction plate will immediately become red hot.
3) Place the end of sampling tube near the point of the suspected leak in system.

NOTE:

a. **Since refrigerant gas is heavier than air, small leaks can be easily detected by placing sampling tube directly below the check point.**
b. **Suitable ventilation is required. If refrigerant gas is mixed with the surrounding air, leak detector will always indicate a response and detection of the actual leak will be difficult.**
c. **Never hold leak detector at an angle.**

CAUTION:

a. **Never inhale the fumes produced by combustion of refrigerant gas since they are toxic.**
b. **Never use halide torch in a place where combustible or explosive gas is present.**

4) The flame will be almost colorless when there is no refrigerant gas being burned. When there is a small refrigerant gas leak, the flame will be green or yellowgreen. When refrigerant gas leakage is large, the flame will be brilliant blue or purple. Since the color of the flame will be yellow when dust is being burned or there is aging scale on copper reaction plate, always keep the strainer of sampling tube and reaction plate clean.
5) Major check points
(1) Compressor
- Compressor shaft seal (rotate the compressor by hand)
- Oil filler plug
- Flexible hose connections
- Rear cover and side cover gaskets.
- Service valve

(2) Condenser
- Condenser pipe fitting
- Condenser inlet and outlet pipe connections

(3) Piping
- Flared section of high pressure and low pressure flexible hose.
- Pipe connections
- Service valve

(4) Evaporator housing
- Inlet and outlet pipe connections
- Expansion valve

Electric leak detector

For the operational procedures, refer to the instructions furnished with each electric leak detector.

8) Refrigerant Level Check

Sight glass

Sight glass is provided at the top of receiver drier. One guide for whether there is enough refrigerant in system is given by observing refrigerant flow through sight glass. However, this method is unsuitable for judging the amount of refrigerant. The correct refrigerant level can be judged by measuring the system pressures in accordance with the procedures as described "Performance Test".
1) Start the engine and hold engine speed at 1,500 rpm.
2) Set mode lever to A/C position.
3) Set blower to maximum speed.
4) Check sight glass after the lapse of about five minutes. Judge according to the following table.

Downloaded from www.Manualslib.com manuals search engine

Check item \ Amount of refrigerant	Almost no refrigerant	Insufficient	Suitable	Too much refrigerant
Temperature of high pressure and low pressure pipes.	Almost no difference between high pressure and low pressure side temperature.	High pressure side is warm and low pressure side is fairly cold.	High pressure side is hot and low pressure side is cold.	High pressure side is abnormally hot.
State in sight glass.	Bubbles flow continuously. **Bubbles will disappear and something like mist will flow when refrigerant is nearly gone.** 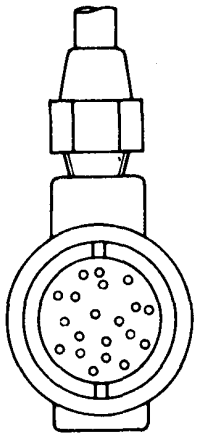 *Fig. 13-64* A26-042	The bubbles are seen at intervals of 1 - 2 seconds. 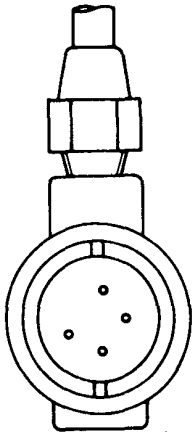 *Fig. 13-65* A26-043	Almost transparent. Bubbles may appear when engine speed is raised and lowered. **No clear difference exists between these two conditions.** 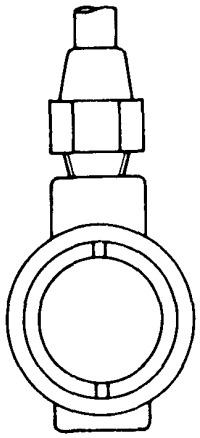 *Fig. 13-66* A26-044	No bubbles can be seen.
Pressure of system.	High pressure side is abnormally low.	Both pressure on high and low pressure sides are slightly low.	Both pressures on high and low pressure sides are normal.	Both pressures on high and low pressure sides are abnormally high.
Repair.	Stop compressor and conduct an overall check.	Check for gas leakage, repair as required, replenish and charge system.		Discharge refrigerant from service valve of low pressure side.

NOTE:

a. **The bubbles seen through the sight glass are influenced by the ambient temperature. Since the bubbles are hard to show up in comparatively low temperatures below 20°C (68°F), it is possible that a slightly larger amount of refrigerant would be filled, if supplied according to the sight glass. Be sure to recheck the amount when it exceeds 20°C (68°F). In higher temperature the bubbles are easy to show up.**

b. **When the screen in the receiver drier is clogged, the bubbles will appear even if the amount of refrigerant is normal. In this case, the outlet side pipe of the receiver drier becomes considerably cold.**

Performance test

Check for the amount of refrigerant in the system can be made by measuring pressure on discharge side.
The correct amount of refrigerant is in the system, if pressure on the discharge side is within the specified range. For details, refer to "Performance Test" described later.

Overcharging will show up in higher pressure on discharge side.

9) Compressor Oil Level Check

The oil used to lubricate compressor circulates into system with refrigerant gas while compressor is operating. If a considerable amount of leakage of refrigerant gas happens, the leakage of compressor oil is also considered. There will be no compressor oil leakage from a completely sealed system. When system operates under satisfying

Downloaded from www.Manualslib.com manuals search engine

condition, the compressor oil level check is unnecessary.

When checking the level of compressor oil or when replacing any component part of the system, use the following service procedure. This facilitates to return oil to compressor.

1) Operate compressor at engine speed from 1,000 rpm to 1,500 rpm with controls set for maximum cooling and high blower speed for about 10 minutes in order to return compressor oil to compressor.

2) Stop the engine and discharge refrigerant of system and then remove compressor from the car.

3) When exchanging the compressor for new one which contains 150 cm^3 (150 cc, 9.15 cu in) oil, drain 80 cm^3 (80 cc, 4.88 cu in) oil from it or adjust the amount of oil to the same of the removed compressor.

4) When exchanging for a service compressor which contains 70 cm^3 (70 cc, 4.27 cu in) oil, install it without any adjusting.

5) When exchanging a cooling unit, pour 50 cm^3 (50 cc, 3.05 cu in) oil to the compressor from the suction hose after installing the cooling unit.

If compressor is inoperative due to defective compressor or heavy loss of refrigerant, exchange the compressor through the procedure from 2 to 5.

10) Performance Test

The cooling performance of the air conditioner changes considerably with changes in surrounding conditions. Testing must be performed using the correct method. This test is used to judge whether system is operating correctly and can also be used as a guide in checking for problems.

1) Park the car indoors or in the shade.

2) Open all the windows of the car fully. However, close the doors.

3) Open the hood.

4) Connect manifold gauge to high- and low-side service valves of the system. Refer to "Handling Manifold Gauge".

5) Set mode lever to A/C MAX position.

6) Set temperature control dial to COLD position.

7. Set blower to its highest speed.

8. Start the engine and hold engine speed at 1,500 rpm.

9) After the air conditioner has been operated for about 10 minutes, measure system pressures at high-pressure (discharge) side and low-pressure (suction) side.

10) Measure the temperatures of inlet air to blower and outlet air at the grilles.

11) Measure the temperature and humidity of the ambient air at a point 1 m (3.3 ft) front of condenser. However, a dry bulb and wet bulb must not be placed in direct sunlight.

12) Check for any abnormalities by comparing the test results with standard pressure in "Performance Chart".

NOTE:

a. The pressure will change in the following manner with changes in conditions:

- **When blower speed is low, discharge pressure will drop.**
- **When the relative humidity of intake air is low, discharge pressure will drop.**

b. The temperature will change in the following manner with changes in conditions:

When the ambient air temperature is low, the outlet air temperature will become low.

If the test reveals that there is any abnormality in system pressure, isolate the cause and repair by reference to "Troubleshooting".

11) Refrigerant Leaks

If leaks are noticeable, leaky parts should be repaired. Then system should be filled with refrigerant. Do not operate compressor with refrigerant level excessively low.

If this caution is neglected, a burnt compressor will result since heavy loss of refrigerant usually indicates heavy loss of compressor oil.

If system has been exposed to atmosphere for an extended period of time, receiver drier must be replaced. If leaks are slight and no air is present in system, add refrigerant as necessary. To detect leaks, refer to relative topics under "Checking for Leaks". Here is how leaks are stopped.

1) Check torque on the connection fitting and, if too loose, tighten to the proper torque. Check for gas leakage with a leak detector.

2) If leakage continues even after the fitting has been retightened, discharge refrigerant from system, disconnect the fittings, and check its seating face for damage. Always replace even if damage is slight.

3) Check compressor oil and add oil if required.

4) Charge refrigerant and recheck for gas leaks. If no leaks are found, evacuate and charge system.

Downloaded from www.Manualslib.com manuals search engine

12) Performance Chart

Conditions
- Engine rotating speed: 1,500 rpm
- Sunshine: No
- Doors: Close
- Door windows: Open
- Engine hood: Open
- Front wind velocity: 2 m/sec (7 ft/sec) or less
- Air humidity of front window: 50 to 80 percents
- Mode lever position: CIRC-A/C MAX
- Fan switch: Highest position

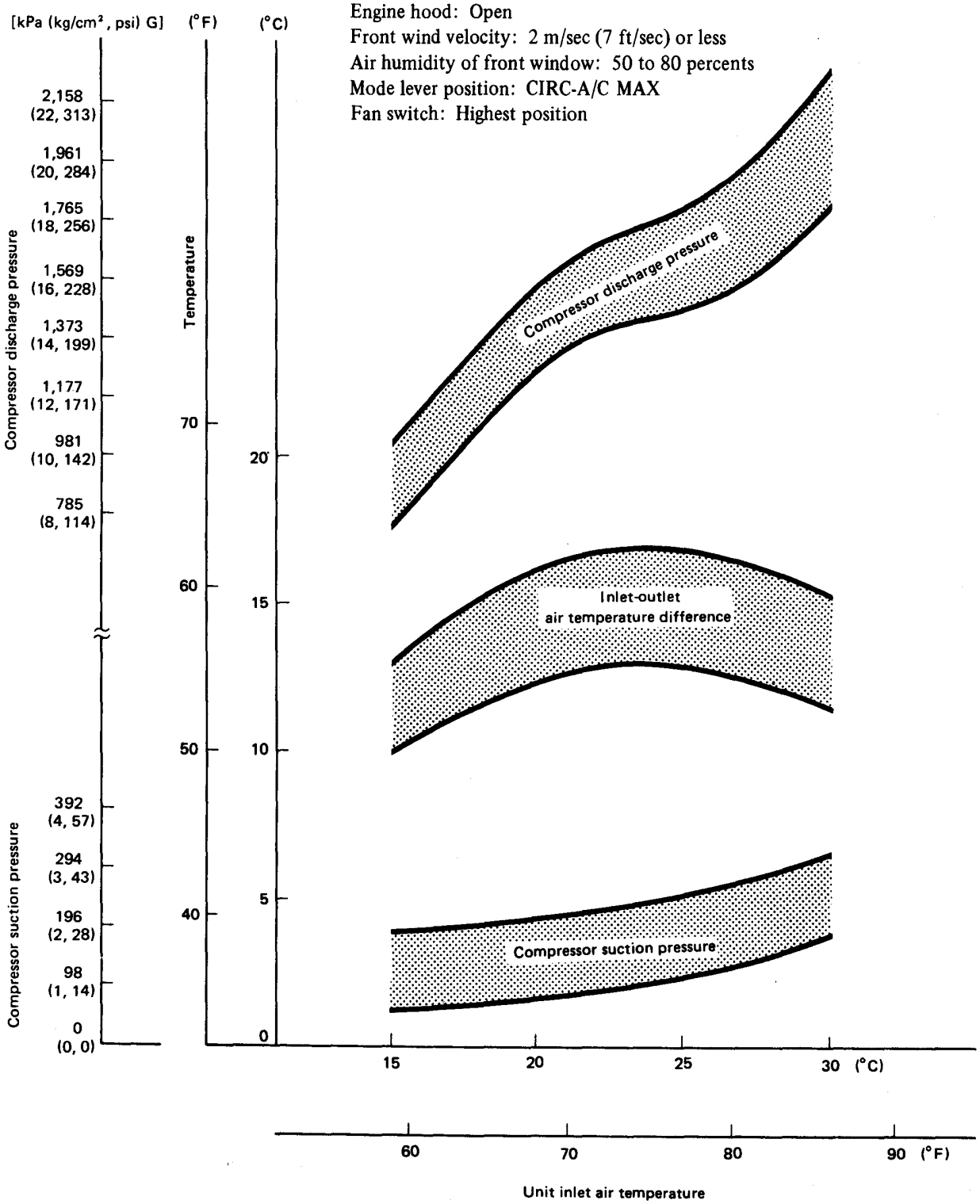

Fig. 13-67

A26-079

Downloaded from www.Manualslib.com manuals search engine

3. Repair for Component Parts

1) Compressor

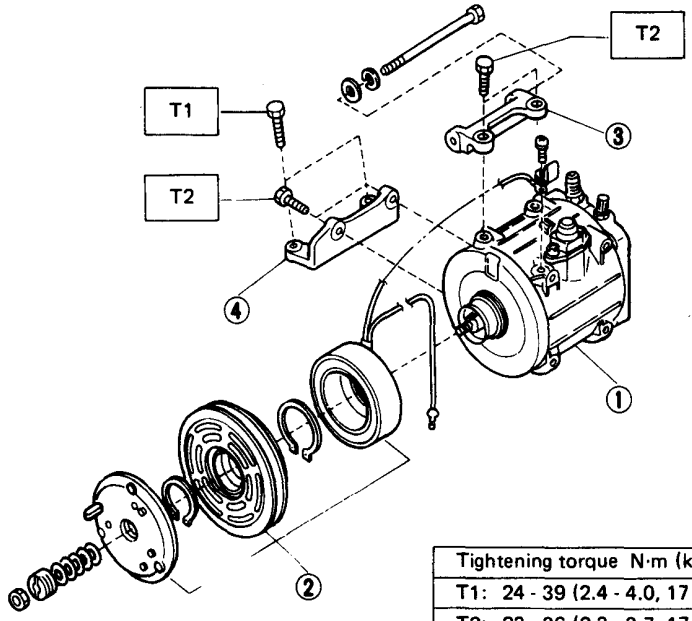

Tightening torque N·m (kg-m, ft-lb)
T1: 24 - 39 (2.4 - 4.0, 17 - 29)
T2: 23 - 36 (2.3 - 3.7, 17 - 27)

A26-125

1 Compressor
2 Magnet clutch
3 Bracket (upper)
4 Bracket (lower)

Fig. 13-68

The MJS-170 compressor employs an oil-mist jet system in which some lubricant is mixed in the refrigerant and the mixture is sprayed directly to the sliding portions from the compressor suction side.

Compressor clutch

The most likely source of problem is clutch slippage. Factors are listed here. Exercise ample care.

1) Clearance between clutch hub and pulley should be 0.5 to 0.8 mm (0.020 to 0.031 in) at all peripheral points.

2) Make sure that there is no oil or dirt on friction surfaces of clutch disc (clutch hub) and pulley. Remove any oil or dirt with a dry rag.

3) Make sure that terminal voltage at magnetic coil is above 10.5V.

Removal and installation

1) Disconnect electrical wiring from compressor.

2) Loosen bolts fixing tension pulley, and slacken V-belt.

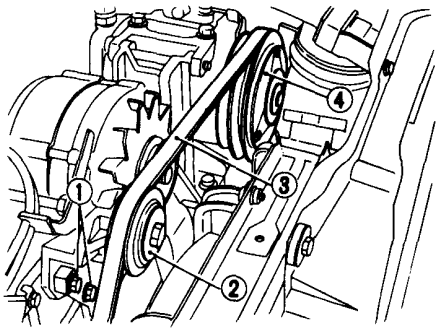

1 Bolts
2 Tension pulley
3 V-belt
4 Compressor

A26-082

Fig. 13-69

3) Discharge the refrigerant from the system (refer to "Discharging the System").

4) Disconnect the flexible hose.

5) Loosen the compressor mounting bolts, (first the lower two and then the upper one) and then remove the compressor.

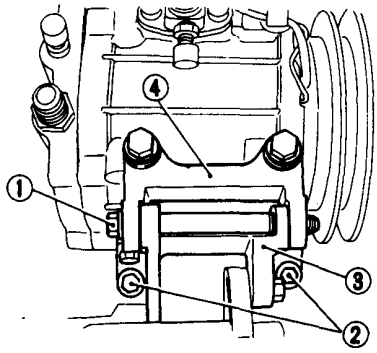

1 Upper bolt
2 Lower bolts
3 Bracket (compressor)
4 Bracket (upper)

A26-083

Fig. 13-70

6) Detach upper and lower brackets from compressor.

7) All removed parts should be installed in the reverse order of removal with the following particulars.

a. Tightening torques are as follows:

Torque N·m (kg-m, ft-lb)	
Bolts for installing brackets	23 – 29 (2.3 – 3.0, 17 – 22)
Compressor mounting bolts	24 – 39 (2.4 – 4.0, 17 – 29)
Flexible hose (Pd) flare nut	20 – 29 (2.0 – 3.0, 14 – 22)
Flexible hose (Ps) flare nut	25 – 34 (2.5 – 3.5, 18 – 25)

b. When attaching the compressor to the compressor bracket, push the upper bracket's spacer 1 to 2 mm (0.04 to 0.08 in) inward beforehand.

Downloaded from www.Manualslib.com manuals search engine

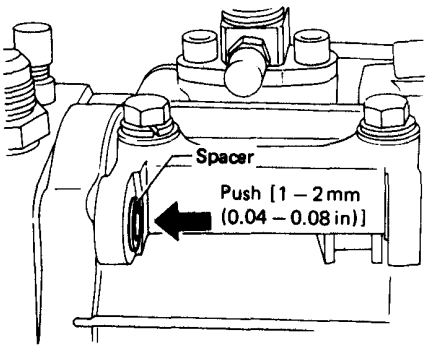

Fig. 13-71 A26-085

c. Be sure that there is a gap of at least 20 mm (0.79 in) between the flexible hose (Pd) and the compressor.
d. For belt adjustment, refer to Page 13-35.
e. For charging refrigerant, refer to Page 13-20.

Disassembly

NOTE:

a. Before starting work, remove dirt from outside the detached compressor. Clean the workbench, tool, and your hands.

b. Do not leave compressor on its side or upside down for more than 10 minutes, as compressor oil will enter low pressure chamber.

1) Using Clutch Hub Wrench 925770000, hold clutch hub. With suitable socket wrench, remove shaft nut from shaft. Using Hub Nut Socket 925790000, remove hub nut.
2) Using Clutch Hub Puller 925780000, remove clutch hub. Thread tool into the bore of clutch hub, hold tool with wrench, and then thread in center bolt.

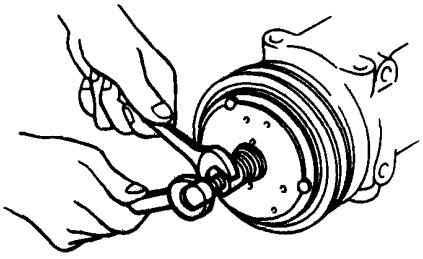

Fig. 13-72 A26-050

3) Using snapring plier, take off snapring from front cover.

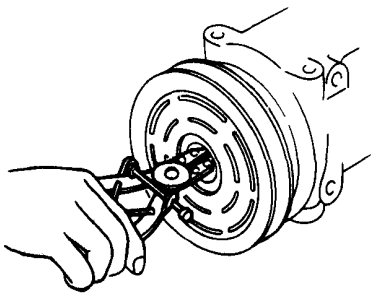

Fig. 13-73 A26-051

4) Remove pulley and bearing ASSY.

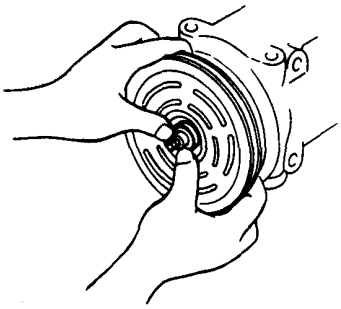

Fig. 13-74 A26-052

5) Using screwdriver, loosen mounting screw of wire clamp. Using snapring plier, take off snapring from inside of coil ASSY.

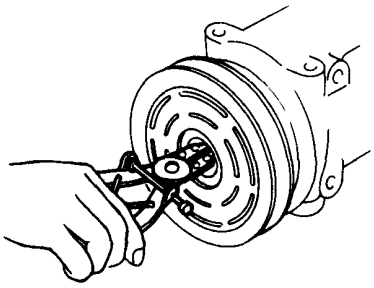

Fig. 13-75 A26-051

6) Remove coil assembly from front cover.

Inspection

1) Check the friction surfaces of the clutch for damage due to excessive heat or excessive grooving due to slippage. If necessary, replace coil, pulley and bearing assembly, and clutch hub as a set.
2) Oil or dirt on the friction surfaces should be cleaned with a suitable solvent and a dry rag.
3) Check coil for shorted or opened binding leads.

Assembly

1) Install coil assembly to compressor body make sure that terminal position is same as before the removal.
Install snapring (Using snapring plier) (Check snapring upper side or lower side).
2) Using a plastic mallet, drive pulley and bearing assembly (onto the nose of front cover).
Turn the pulley, making sure that there is no noise and that rotation is free. Also make sure that there is no pulley play.
3) Using snapring plier, install a snapring to inside of coil ASSY. Oil or dirt on the friction surfaces should be cleaned up.
4) Fit key and clutch hub to the shaft. Select adjusting spacer which gives the correct clearance between the pulley and clutch hub.

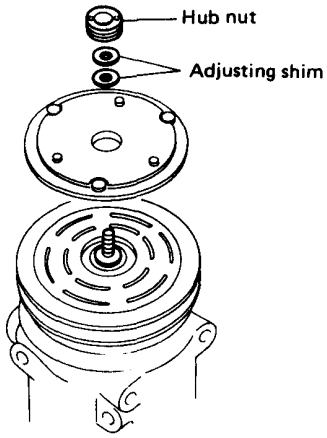

Fig. 13-76 A26-054

5) Coat shaft nut with Locktite. (equivalent to HI-LOCK FT-15B)

Downloaded from www.Manualslib.com manuals search engine

Torque (Shaft nut)	19 – 21 N·m (1.9 – 2.1 kg-m, 14 – 15 ft-lb)

6) Using a thickness gauge, measure the clutch hub-to-pulley clearance.

Hub-to-pulley clearance:
0.5 – 0.8 mm (0.020 – 0.031 in)

If the specified clearance is not obtained, replace adjusting spacer and readjust.

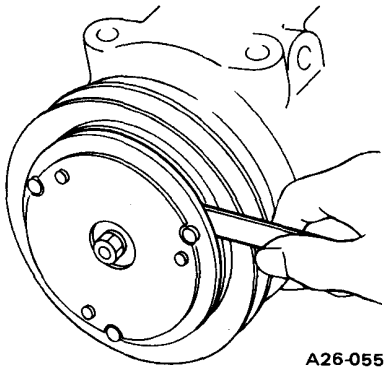

Fig. 13-77

NOTE:
When replacing compressor clutch ASSY, do not forget break-in operation, accomplished by engaging and disengaging the clutch some thirty times. Break-in operation raises the level of transmitted torque.

2) Condenser

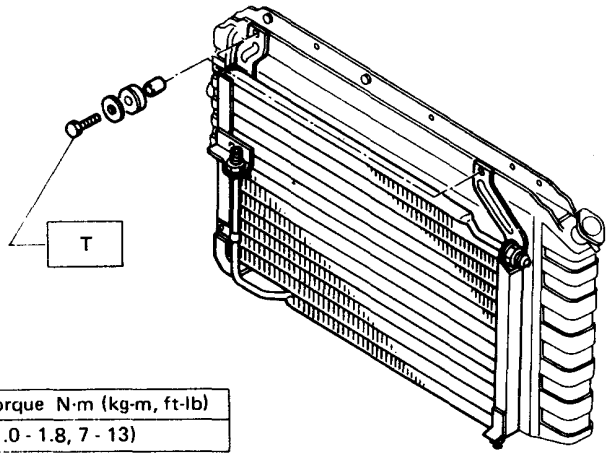

Tightening torque N·m (kg-m, ft-lb)
T: 10 - 18 (1.0 - 1.8, 7 - 13)

Fig. 13-78

1) Remove front grille and lower stay.
2) Discharge refrigerant.
3) Disconnect grounding wiring from radiator.
4) Disconnect pipe connections.
5) Loosen two mounting bolts from radiator, and then take out condenser.
6) Condenser should be installed in the reverse order of removal.

Torque N·m (kg-m, ft-lb)	
Left-hand piping flare nut	15 – 25 (1.5 – 2.5, 11 – 18)
Right-hand piping flare nut	10 – 20 (1.0 – 2.0, 7 – 14)

Inspection

1) Make sure the condenser fins are free from dust and insects. If the fins are clogged, clean by blowing air or water through them.

NOTE:
To prevent dust and water from getting into the condenser, this work work must be done when the condenser is installed in an actual vehicle.

2) Check all of the condenser's parts to see if they show any sign of oil seepage. Should oil ooze or gas leak from a particular part, replace it with a new one.

3) Receiver Drier

Removal and installation

1) Drain the fluid from the washer tank, remove the washer tank, and then place it in the rear.

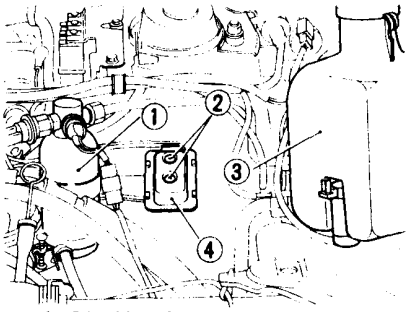

1 Liquid tank
2 Mounting bolts
3 Washer tank
4 Bracket (washer tank)

Fig. 13-79

2) Discharge refrigerant.
3) Disconnect the wiring from the low-pressure switch.
4) Disconnect two pipes.
5) Loosen the two mounting bolts and remove the receiver drier.

NOTE:
The receiver drier contains a desicant. Be sure to put a blind plug in the detached receiver drier to protect it from moisture.

6) The receiver drier should be installed in the reverse order in which it was removed.

Downloaded from www.Manualslib.com manuals search engine

Torque N·m (kg-m, ft-lb)	
Mounting bolt	5.4 – 9.3 (0.55 – 0.95, 4.0 – 6.9)
Pipe flare nut	10 – 20 (1.0 – 2.0, 7 – 14)

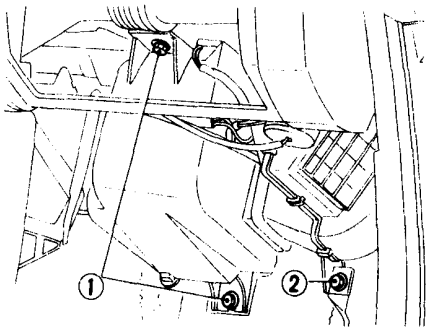

1 Bolts
2 Blower mounting bolt

A26-092

Fig. 13-81

4) Evaporator

Removal and installation

1) Disconnect the lead wire from the battery.
2) Discharge refrigerant.
3) Disconnect the discharge pipe from the evaporator, and then detach the suction pipe.

CAUTION:
Protect the open pipe connections with caps to prevent moisture from entering the system.

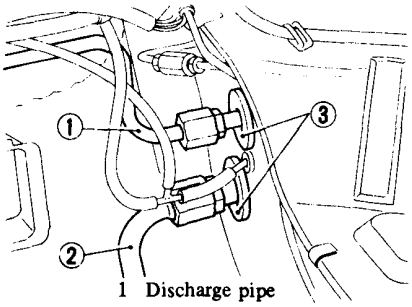

1 Discharge pipe
2 Suction pipe
3 Grommet

A26-090

Fig. 13-80

4) Remove the grommet from the evaporator's inlet and outlet pipe connections.
5) Remove the following parts in the stated order:
a. Instrument panel lid and pocket.
b. Front shelf.
c. Lower duct.
d. Blower
6) Loosen two bolts, disconnect the drain pipe connection, and then remove the evaporator.

7) The evaporator should be installed in the reverse order in which it was removed. When installing the evaporator in the car body, make sure the wiring harness does not get caught between the body parts.

Disassembly and ASSY

1) Using a flat-bladed screwdriver, remove the seven clamps and the evaporator upper case.

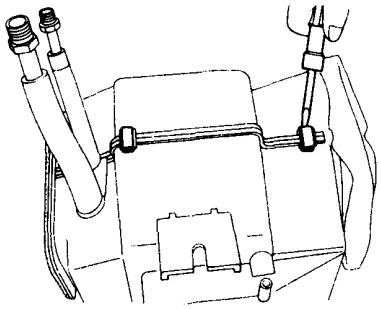

A26-093

Fig. 13-82

2) Remove the lower case from the evaporator.
3) Remove the component parts from the evaporator.
a. Disconnect the connection between the expansion valve and discharge pipe.
b. Remove the expansion valve from the header on top of the evaporator.

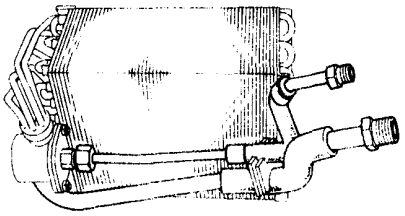

A26-094

Fig. 13-83

4) Check to see if the evaporator fins are clogged. If they are, clean them with compressed air.

NOTE:
Water must never be used to clean the evaporator.

5) Check parts that have been removed for cracks or scratches, and repair or replace them with new ones, if necessary.
6) The evaporator should be reassembled in the reverse order in which it was disassembled. Observe the following points during the reassembly process:
a. Confirm that the O-ring is inserted in the specified position.
b. Tightening torque

Torque N·m (kg-m, ft-lb)	
Expansion valve's mounting nut	2.5 – 4.4 (0.25 – 0.45, 1.8 – 3.3)
Discharger pipe union nut	10 – 20 (1.0 – 2.0, 7 – 14)
Flare nut on discharge side	10 – 20 (1.0 – 2.0, 7 – 14)
Flare nut on suction side	20 – 29 (2.0 – 3.0, 14 – 22)

Downloaded from www.Manualslib.com manuals search engine

5) Condenser Cooling Fan

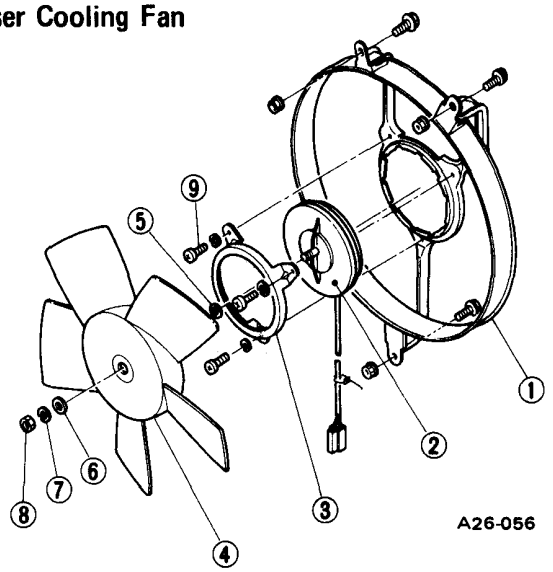

1 Shroud
2 Motor
3 Bracket
4 Cooling fan
5 Washer
6 Washer
7 Spring
8 Nut
9 Screw

Fig. 13-84

Removal and installation

1) Remove the clip on the motor wiring, and disconnect the coupler.
2) Remove the shroud by loosening the mounting bolts.
3. Remove the fan by loosening the mounting bolt.
4) Open the clip and remove the wiring from the shroud.
5) Loosen the three screws to remove the motor bracket, and then remove the motor from the shroud.
6) The fan should be installed in the reverse order in which it was removed.

a. Be sure to position the motor properly when installing it in the shroud.

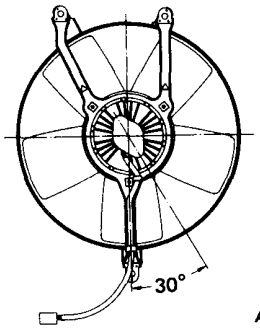

Fig. 13-85

b. Tightening torque

Torque (Fan mounting nut)	3 – 5 N·m (0.3 – 0.5 kg-m, 2.2 – 3.6 ft-lb)

c. After installing it, operate the fan to see if it runs normally and doesn't make any unusual noises or vibrations.

6) Actuator (F.I.C.D.) and Lever

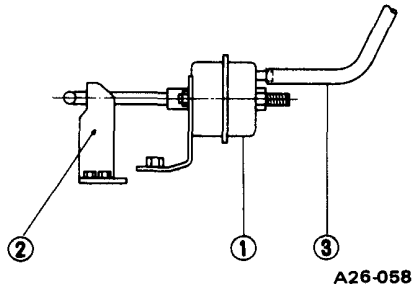

1 Actuator (F.I.C.D.)
2 Lever (F.I.C.D.)
3 Vacuum hose

Fig. 13-86

Procedure for adjusting engine idling speed

1) With the air conditioner off, check the clearance between the actuator hook and lever (F.I.C.D.).

a. Vehicle with HITACHI carburetor: It should be $2.5^{+1}_{-1.5}$ mm ($0.098^{+0.04}_{-0.059}$ in).

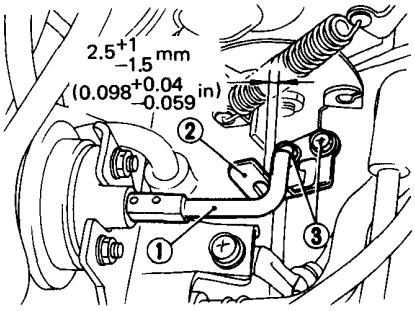

1 Hook
2 Lever (F.I.C.D.)
3 Bolts

Fig. 13-87

If the clearance is improper, adjust it by loosening the lever's (F.I.C.D.) mounting bolts.

b. Vehicle with CARTER-WEBER carburetor: It should be approx. 4 mm (0.16 in) when both actuator and lever are installed in their normal positions.

2) After warming the engine up, start the air conditioner, depress the accelerator pedal 2 or 3 times, and turn the adjustment nut of the actuator to set the idling speed.

Idling speed
950 ± 50 rpm

To adjust, follow the instructions below.

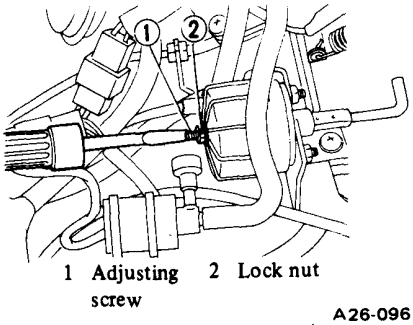

1 Adjusting screw
2 Lock nut

Fig. 13-88

Loosen the lock nut and turn the adjustment screw with a flat-bladed screwdriver.

a. Turn it clockwise to decrease the idling speed.
b. Turn it counterclockwise to increase the idling speed.

NOTE:

a. The air cleaner must be installed when adjusting the idling speed and the air conditioner is operating.
b. Make sure that the lever (F.I.C.D.) is able to move all the way to the fully open position.

Downloaded from www.Manualslib.com manuals search engine

7) Tension Pulley and Idler Pulley

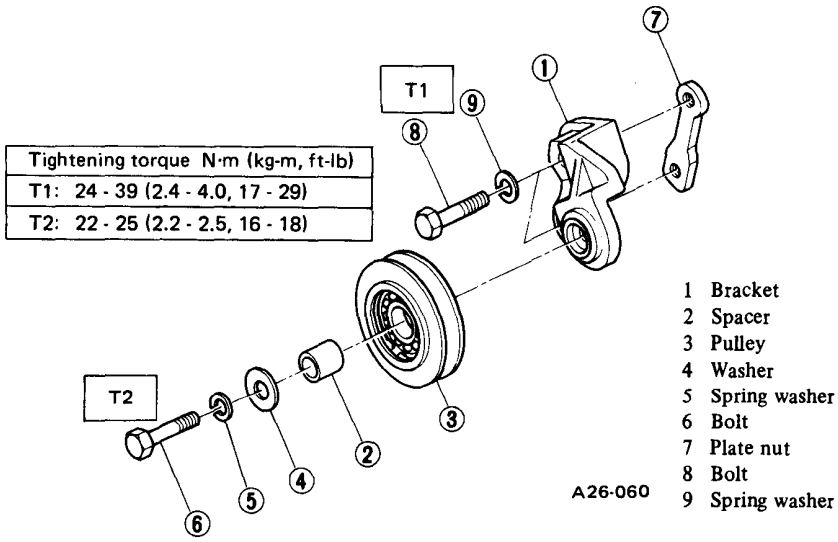

Fig. 13-89 Tension pulley

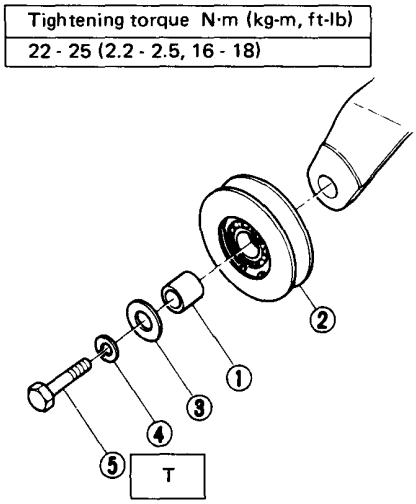

1 Spacer
2 Pulley
3 Washer
4 Spring washer
5 Bolt

Fig. 13-90 Idler pulley

Replace tension pulley and/or idler pulley if they rattle or make any abnormal noises.

Torque N·m (kg-m, ft-lb)	
Bolt for tension pulley	22 – 25 (2.2 – 2.5, 16 – 18)
Bolt for idler pulley	22 – 25 (2.2 – 2.5, 16 – 18)

Procedure for adjusting the V-belts tension

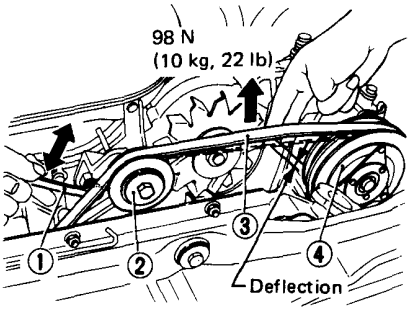

1 Box wrench
2 Tension pulley
3 V-belt
4 Compressor

Fig. 13-91

The V-belt's tension should be adjusted in the following manner.

1) Loosen the two bolts that mount the tension pulley.

2) Adjust the tension so the belt will deflect to the specified value midway between the tension pulley and the compressor. Then tighten the lower mounting bolt.

V-belt tension
Deflection 12 – 15 mm (0.47 – 0.59 in)/at 98N (10 kg, 22 lb)

Torque (Bolts)	24 – 39 N·m (2.4 – 4.0 kg-m, 17 – 29 ft-lb)

3) Tighten the upper mounting bolt.

8) Flexible Hose

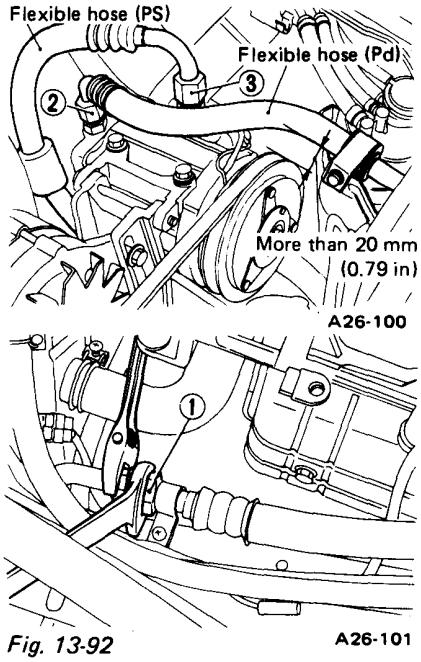

Fig. 13-92

With the following cautions, replace flexible hoses with new ones if they are damaged or swollen.

1) The flexible hoses should be free from twists and tension after they have been connected.

1) The flexible hoses must not be bent forcibly.

3) Flexible hose (Pd) should be more than 20 mm (0.79 in) away from the compressor pulley after it has been connected.

4) Tightening torque of flexible hose connections:

Torque N·m (kg-m, ft-lb)	
Flare nut ① on Ps side	20 – 29 (2.0 – 3.0, 14 – 22)
Flare nut ② on Pd side	20 – 29 (2.0 – 3.0, 14 – 22)
Flare nut ③ on Ps side	25 – 34 (2.5 – 3.5, 18 – 25)

Downloaded from www.Manualslib.com manuals search engine

9) Pipe (Ps side)

Removal and installation

1) Remove the spare tire.
2) Drain the fluid from the windshield washer tank. Then remove the tank from the bracket and place it on the front bulkhead.
3) Remove the battery and loosen the lower pipe clamp bolt.

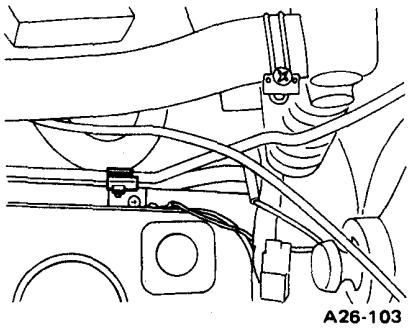

Fig. 13-93

4) Discharge refrigerant (see Page 13-20).
5) Disconnect the pipe (Ps) from the evaporator.
6) Remove the compressor V-belt.
7) Disconnect the flexible hose (Ps).

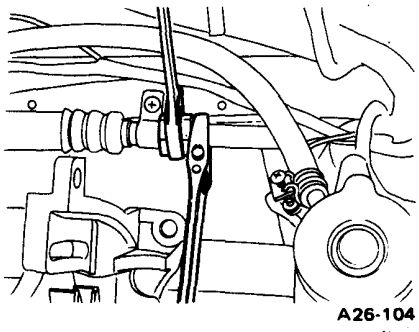

Fig. 13-94

8) Jack the car up, and remove the undercover (right and left) and underguard (4WD vehicle only.)
9) Remove the pipe clamp bolt under the radiator, and open the clamp.

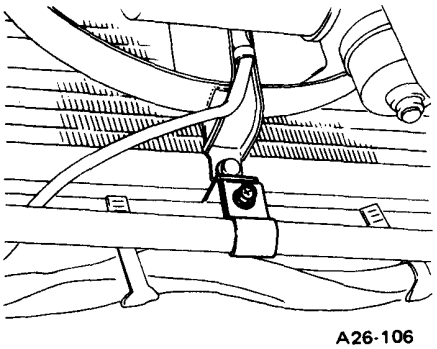

Fig. 13-95

10) Move the pipe (Ps) to the right and pull it downward from the left end.
11) The unit should be installed in the reverse order in which it was removed. Pay attention to the following particulars during installation:
(1) Tightening torque

Torque [Flare nut of pipe (Ps)]	20 – 29 N·m (2.0 – 3.0 kg-m, 14 – 22 ft-lb)

(2) Be sure that a gap of at least 10 mm (0.39 in) is present between the brake pipe under the washer tank and the pipe (Ps).
(3) Keep a gap of at least 15 mm (0.59 in) between the intake air preheat duct and the pipe.
(4) For charging the refrigerant, refer to Page 13-20.

10) Relay and Fuse

The air conditioner relay and sub fan fuse harness B are installed in the engine compartment, as shown in the figure.

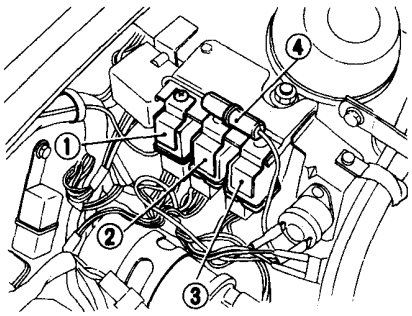

1 Air conditioner relay
2 Sub-fan relay
3 Sub-fan control relay
4 Sub-fan fuse (B)

Fig. 13-96

Blower motor fuse harness A is located on the back of the instrument panel. The blower motor relay is attached to the fuse box bracket.

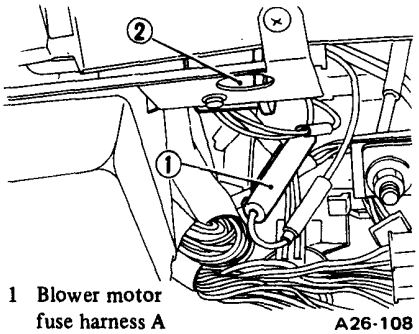

1 Blower motor fuse harness A
2 Blower motor relay

Fig. 13-97

Inspection of the relay

4-pole relay

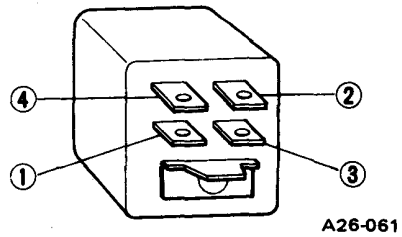

6-pole relay

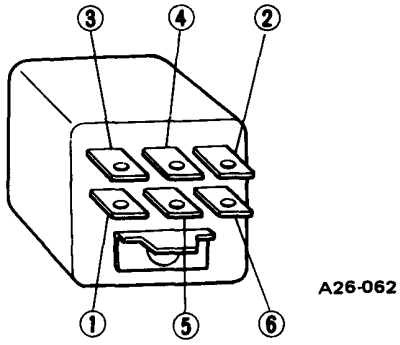

Fig. 13-98

Check conduction with a circuit tester (ohm range) according to the following table.

Downloaded from www.Manualslib.com manuals search engine

Sub-fan control relay Main fan control relay	Sub-fan relay	Air conditioner relay	Blower relay
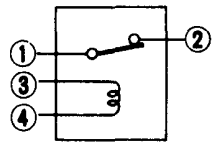 *Fig. 13-99* A26-063	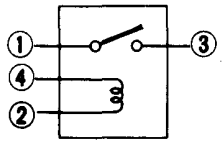 *Fig. 13-100* A26-064	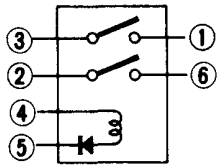 *Fig. 13-101* A26-065	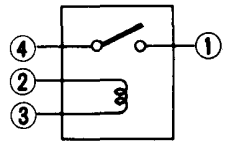 *Fig. 13-102* A26-066
About 80Ω between ③ and ④	About 80Ω between ② and ④	About 80Ω between ④ and ⑤	About 80Ω between ② and ③
0Ω between ① and ②	∞Ω between ① and ③	∞Ω between ① and ③ ∞Ω between ② and ⑥	∞Ω between ① and ④

11) Microswitch

Removal and installation

1) Remove the front shelf and air duct.
2) Remove the microswitch with bracket which is installed on the heater unit's right side.

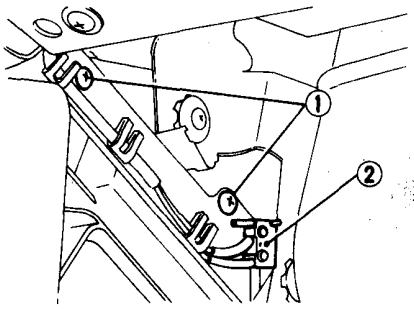

1 Screws
2 Microswitch A26-110

Fig. 13-103

3) Check the microswitch's operation while watching the circuit tester (ohm range).

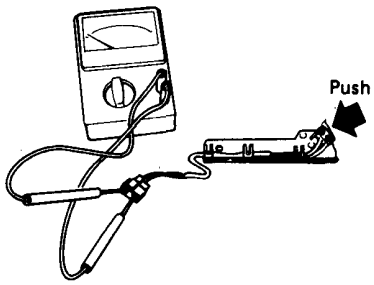

A26-111

Fig. 13-104

Lever control	Conduction
Free	None (∞Ω)
Push	Yes (0 Ω)

4) The switch should be installed in the reverse order in which it was removed.

12) Air Valve

Removal and installation

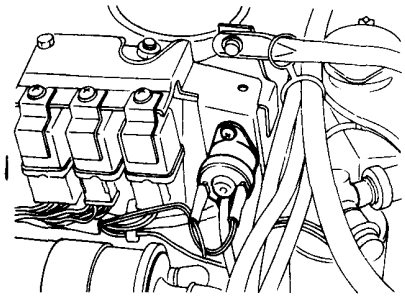

A26-112

Fig. 13-105

1) Remove the vacuum hose.
2) Disconnect the connector.
3) Loosen the two mounting screws and remove the air valve.

4) Apply a 12-V battery voltage to the air valve after it has been removed, and blow air into the source side from your mouth to see if air is conducted.

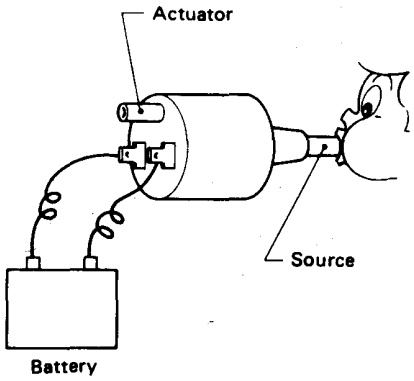

A26-067

Fig. 13-106

Voltage	Air conduction between source and actuator
None	None
Yes	Yes

5) The air valve should be installed in the reverse order in which it was removed.

Downloaded from www.Manualslib.com manuals search engine

13-4. Troubleshooting

1. Heating and Ventilating

Poor heating performance
- Ⓐ Low temperature of outlet air
- Ⓑ No flows of outlet air (or poor flows)
- Ⓒ Air leakage into the compartment

NOTE:
As a matter of fact, hot outlet air can be adjusted only in ten (10) steps of temperature control dial as shown in the following illustration.

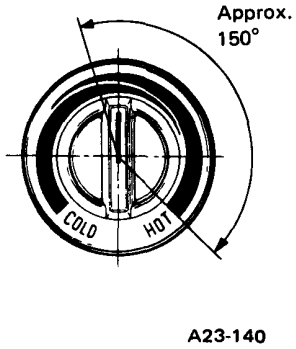

Fig. 13-107

1) Low Temperature of Outlet Air

No.	Cause	Check point	Corrective action
1.	Thermostat leakage	1. The bite of facets and sands 2. Experience of overheating	Clean or replace
2.	Poor adjustment of water cock	The stroke of water cock lever is 22^{+2}_{-0} mm. ($0.87^{+0.08}_{-0}$ in) 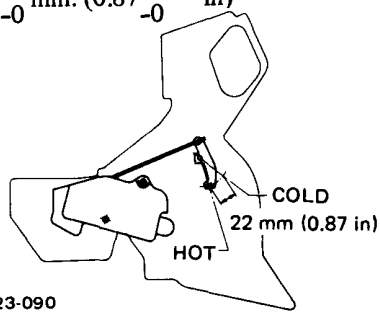 *Fig. 13-108 Lever stroke*	Adjustment **NOTE:** **If lever stroke is shorter than 21 mm (0.83 in), disconnect water cock rod and cable from lever E. Then adjust the control in the same way predescribed.**
3.	Air mixing shutter cannot open fully in spite of setting temperature control dial to HOT.	Check connection of clamp and cable without fail Standard value: 20 mm (0.79 in) at HOT position	Adjustment
4.	Faulty control cable or rod	1. Check excessive bending or buckling of cable and rod. 2. Check disconnection of cable or clamp.	1. Replace (for cable) Repair or replace (for rod) 2. Connection

Downloaded from www.ManualsLib.com manuals search engine

2) No Flows of Outlet Air (Or Poor Flows)

No.	Cause	Check point	Corrective action
1.	Unsufficient performance of blower assembly	1. Check connection of wiring harness for looseness. 2. Check reverse connection of wiring harness.	1. Connection 2. Repair
2.	Choke of air inlet	1. Check choke of air inlet with dry leaves or alien substances.	1. Clean
3.	Disconnection of duct and heater unit or blower assembly	1. Check by watching. 2. Check air leakage around the connection by hand. 3. Check damage of duct edge.	1. Connection 2. Repair 3. Repair or Replace
4.	Unsufficient operation of each shutters	1. Check the control system according to "On-car Services". 2. Check excessive bending or buckling of cable and rod.	1. Adjustment 2. Replace (for cable) Repair or replace
5.	Disconnection of defroster duct	1. Check connection of duct and heater unit for air leakage. 2. Check connection of duct and defroster nozzle for air leakage. 3. Check action of both left and right defroster shutters. 4. Check damage of duct.	1. Connection 2. Connection 3. Repair or adjustment 4. Repair or replace
6.	Unsufficient installation of defroster nozzle	1. Check by watching. 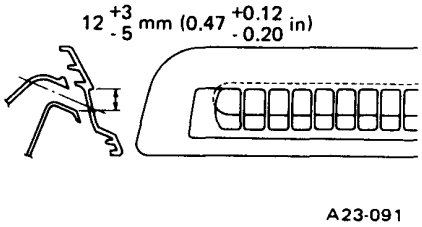 *Fig. 13-109 Installation of defroster nozzle* 2. Check choke of nozzle with alien substances.	1. Repair 2. Clean

Downloaded from www.Manualslib.com manuals search engine

3) Air Leakage into the Compartment

No.	Cause	Check point	Corrective action
1.	Air leakage at the passenger side.	1. Check sealing of shutter at blower assembly. 2. If air leakage occures at CIRC position, it is due to disconnection or break of intake shutter return spring. 3. If air leakage occurs at positions except CIRC of mode lever, it is due to faulty of vacuum control system. 4. Check connection of heater duct and blower assembly or heater unit without fail.	1. Repair 2. Connection or Replace 3. Repair 4. Connection
2.	Air leakage at the driver side	Check the control system according to "On-car Services".	Adjustment
3.	Air leakage from center air outlet	Check the control system according to "On-car Services".	Adjustment

Downloaded from www.Manualslib.com manuals search engine

- **Noisy**
  - **Compressor OFF**
    - Blower makes noise. Repair or replace blower.
      - Bearings of compressor clutch or idler pulley make noise. Repair.
  - **Compressor ON**
    - Compressor itself makes noise. Repair or replace compressor.
    - Belt is loose. Adjust belt.
    - When engine rpm is changed, there are resonant sounds. Retighten compressor bracket bolts. Piping is resonating. Add cramp.
- **Insufficient cooling**
  - **Bubbles in sight glass**
    - Check refrigeration line for gas leaks, and repair leaks if any. Charge refrigerant to correct level. In case of too many leaks, stop compressor, discharge the system, evacuate and recharge the system. As necessary, replace receiver drier.

      Air in system may cause bubbles in sight glass.
  - **No bubbles in sight glass**

    With manifold gauge, check system pressures.
    Measure temperature of discharge air.
    Refer to "Performance Test".

Temperature of outside air °C (°F)	21 (70)	26.5 (80)	32 (90)	38 (100)
Suction pressure kPa (kg/cm², psi)	1,961 – 2,746 (20 – 28, 284 – 398)	2,256 – 3,236 (23 – 33, 327 – 469)	2,746 – 3,727 (28 – 38, 398 – 540)	3,629 – 4,707 (37 – 48, 526 – 683)
Head pressure kPa (kg/cm², psi)	13,534–16,476 (138 – 168, 1,962 – 2,389)	14,097–18,143 (152 – 185, 2,161 – 2,631)	17,162–20,497 (175 – 209, 2,489 – 2,972	19,712–23,046 (201 – 235, 2,858 – 3,342)
Temperature difference (Outside air - discharge air) °C (°F)	10 – 13.5 (50 – 56)	10.5 – 14.5 (51 – 58)	13 – 17 (55 – 63)	15 – 19.5 (59 – 67)

- Engine speed : 1,500 rpm
- Fan switch : Highest position
- Mode lever : CIRC A/C MAX
- Temperature control dial : COLD position

    - System pressure and temperature of discharge air are abnormal. Refer to "Performance Test Diagnoses" for detail.
      - Suction pressure is low.
        - Pipe at receiver drier outlet has low temperature. Receiver drier is restricted. Replace receiver drier.
        - Fin and tube of evaporator have some dents. Replace or repair evaporator.
        - Expansion valve is close excessively, or gas leakage from thermo bulb. Replace expansion valve.
      - Suction pressure is high.
        - Expansion valve is open excessively, or expansion O-ring is damaged. Replace expansion valve.
      - Head pressure is high.
        - Overcharge of refrigerant. Discharge some of refrigerant to correct level.

          Air is mixed in. Discharge system, and replace drier. Evacuate and recharge system.

          Condenser's fin is dented or clogged with dust. Clean exterior surface with water.
      - Suction pressure is high, while head is low.
        - Valve or gasket of compressor is damaged. Repair or replace compressor.
    - Temperature of discharge air is abnormal, but system pressure is normal.
      - Check air flow system. Refer to "Air Flow System".
      - Check grommets on car's dash panel for air leaks; check other seals of car.
- **Blower does not rotate.**
  - Refer to "Blower Motor Diagnoses".
- **Compressor does not run.**
  - Refer to "Compressor Diagnoses".

Downloaded from www.Manualslib.com manuals search engine

1) Performance Test Diagnoses

Of various conditions caused to the air conditioning system, the characteristics revealed on manifold gauge reading are shown in the following.

As to the method of a performance test, refer to the item of "Performance Test".

Each shaded area on the following tables indicates a reading of the normal system when the temperature of outside air is 32.5°C (91°F).

Condition		Probable cause	Corrective action
INSUFFICIENT REFRIGERANT CHARGE			
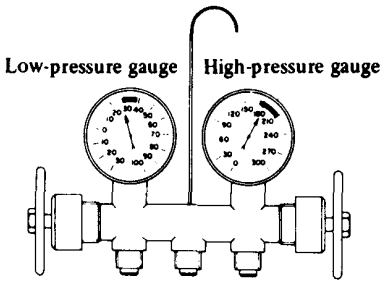 *Fig. 13-110* A26-069	Insufficient cooling. Bubbles appear in sight glass.	Refrigerant is small, or leaking a little.	1. Leak test. 2. Repair leak. 3. Charge system. **NOTE:** **Evacuate, as necessary, and recharge system.**
ALMOST NO REFRIGERANT			**Stop compressor immediately.**
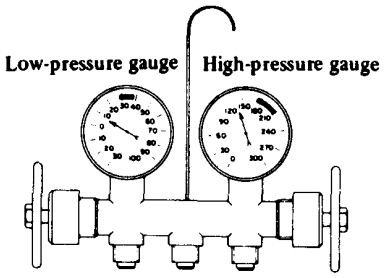 *Fig. 13-111* A26-070	No cooling action. In sight glass appear a lot of bubbles or something like mist.	Serious refrigerant leak.	1. Leak test. 2. Discharge system. 3. Repair leak(s). 4. Replace receiver drier if necessary. 5. Check oil level. 6. Evacuate and recharge system.
FAULTY EXPANSION VALVE			
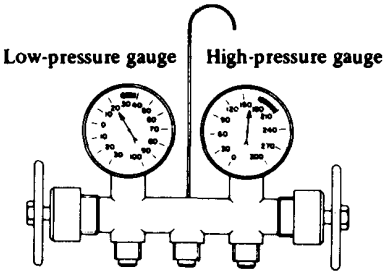 *Fig. 13-112* A26-071	Slight cooling. Sweating or frosted expansion valve inlet.	Expansion valve restricts refrigerant flow. • Expansion valve is clogged. • Expansion valve is inoperative. Valve stuck closed. Thermal bulb has lost charge.	If valve inlet reveals sweat or frost: 1. Discharge system. 2. Remove valve and clean it. Replace it if necessary. 3. Evacuate system. 4. Charge system. If valve does not operate: 1. Discharge system. 2. Replace valve. 3. Evacuate and charge system.

Downloaded from www.Manualslib.com manuals search engine

Condition		Probable cause	Corrective action
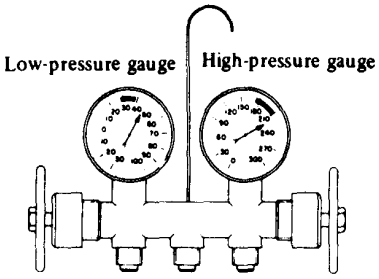 A26-072	Insufficient cooling. Sweated suction line.	Expansion valve allows too much refrigerant through evaporator.	Check valve for operation. If suction side does not show a pressure decrease, replace valve.
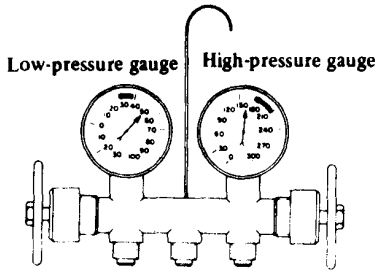 *Fig. 13-113* A26-073	No cooling. Sweating or frosted suction line.	Faulty seal of O-ring in expansion valve.	1. Discharge system. 2. Remove expansion valve and replace O-ring. 3. Evacuate and replace system.
AIR IN SYSTEM			
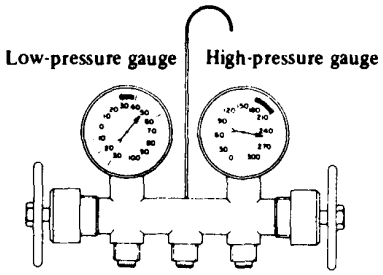 A26-074 *Fig. 13-114*	Insufficient cooling. Sight glass shows occasional bubbles.	Air mixed with refrigerant in system.	1. Discharge system. 2. Replace receiver drier. 3. Evacuate and charge system.
MOISTURE IN SYSTEM			
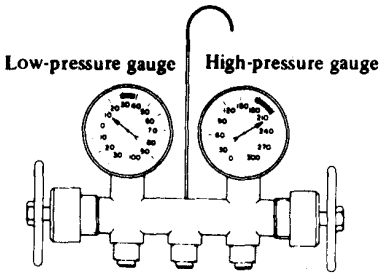 *Fig. 13-115* A26-075	After operation for a while, pressure on suction side may show vacuum pressure reading. During this condition, discharge air will be warm. As warning of this, reading shows 39 kPa (0.4 kg/cm^2, 6 psi) vibration.	Drier is saturated with moisture. Moisture has frozen at expansion valve. Refrigerant flow is restricted.	1. Discharge system. 2. Replace receiver drier (twice if necessary). 3. Evacuate system completely. (Repeat 30-minute evacuating three times.) 4. Recharge system.

Downloaded from www.Manualslib.com manuals search engine

Condition		Probable cause	Corrective action
FAULTY CONDENSER			
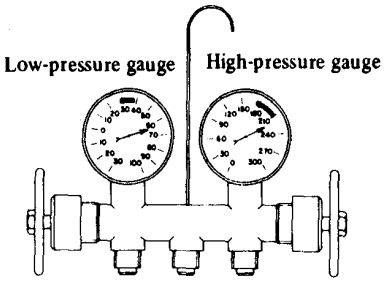 *Fig. 13-116*	No cooling action: engine may overheat. Bubbles appear in sight glass of drier. Suction line is very hot.	Condenser is often found not functioning well.	• Check condenser fan motor. • Check condenser for dirt accumulation. • Check engine cooling system for overheat. • Check for refrigerant overcharge. **NOTE:** **If pressure remains high in spite of all above actions taken, remove and inspect the condenser for possible oil clogging.**
HIGH PRESSURE LINE BLOCKED			
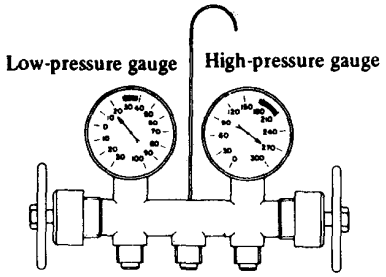 *Fig. 13-117*	Insufficient cooling. Frosted high pressure liquid line.	Drier clogged, or restriction in high pressure line.	1. Discharge system. 2. Remove receiver drier or strainer and replace it. 3. Evacuate and charge system.
FAULTY COMPRESSOR			
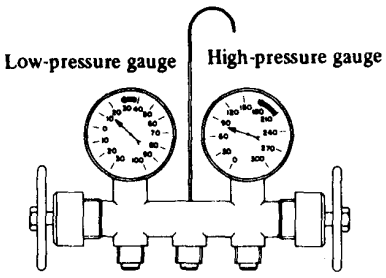 *Fig. 13-118*	Insufficient cooling.	Internal problem in compressor, or damaged gasket and valve.	1. Discharge system. 2. Remove and check compressor. 3. Repair or replace compressor. 4. Check oil level. 5. Replace receiver drier. 6. Evacuate and charge system.

Downloaded from www.Manualslib.com manuals search engine

2) Blower Motor Diagnoses

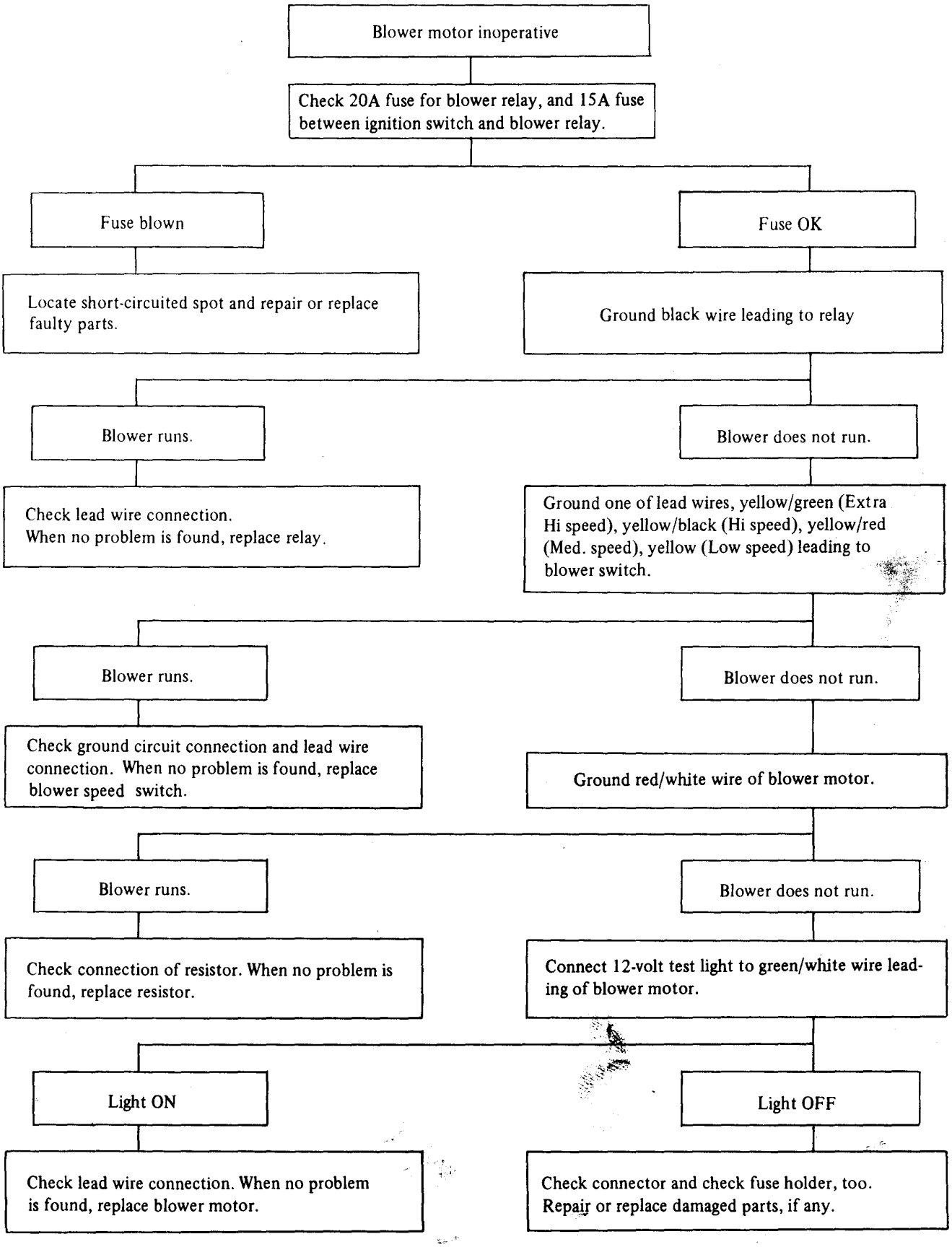

Downloaded from www.Manualslib.com manuals search engine

3) Compressor Diagnoses

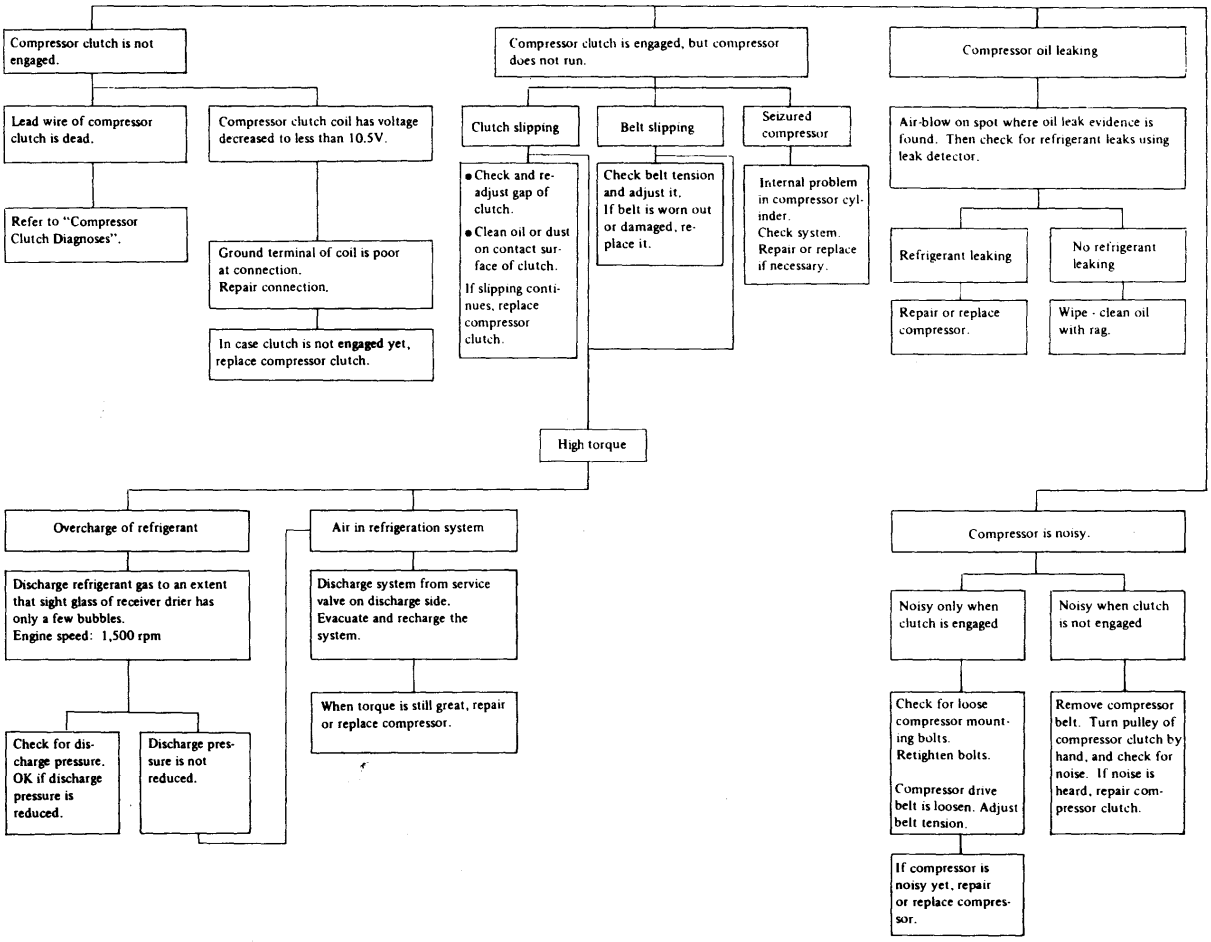

Downloaded from www.Manualslib.com manuals search engine

4) Compressor Clutch Diagnoses

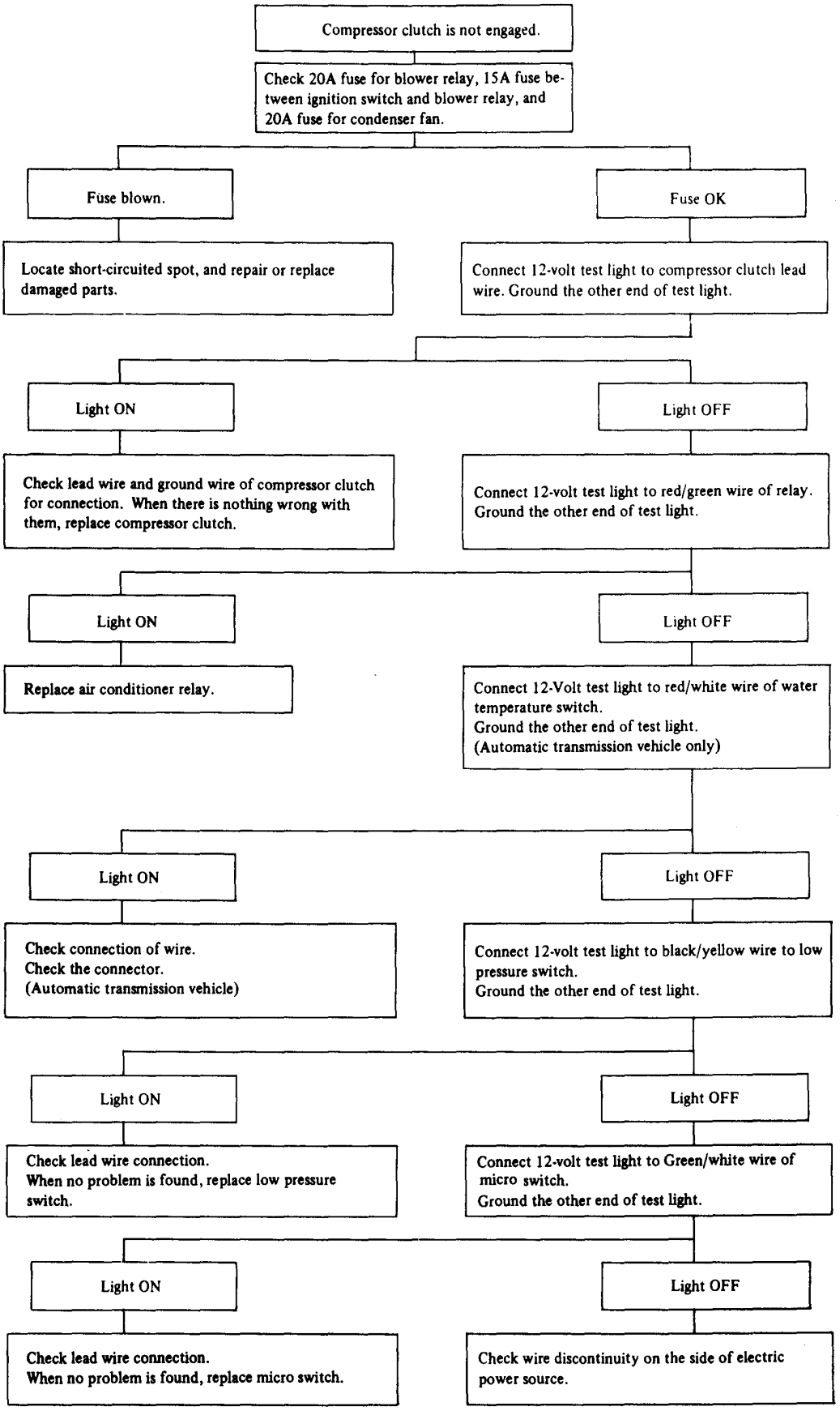

Downloaded from www.Manualslib.com manuals search engine

5) Radiator Fan (Main Fan) Diagnoses

NOTE:
Follow this chart while referring to the description of the electrical system (page 13-16).

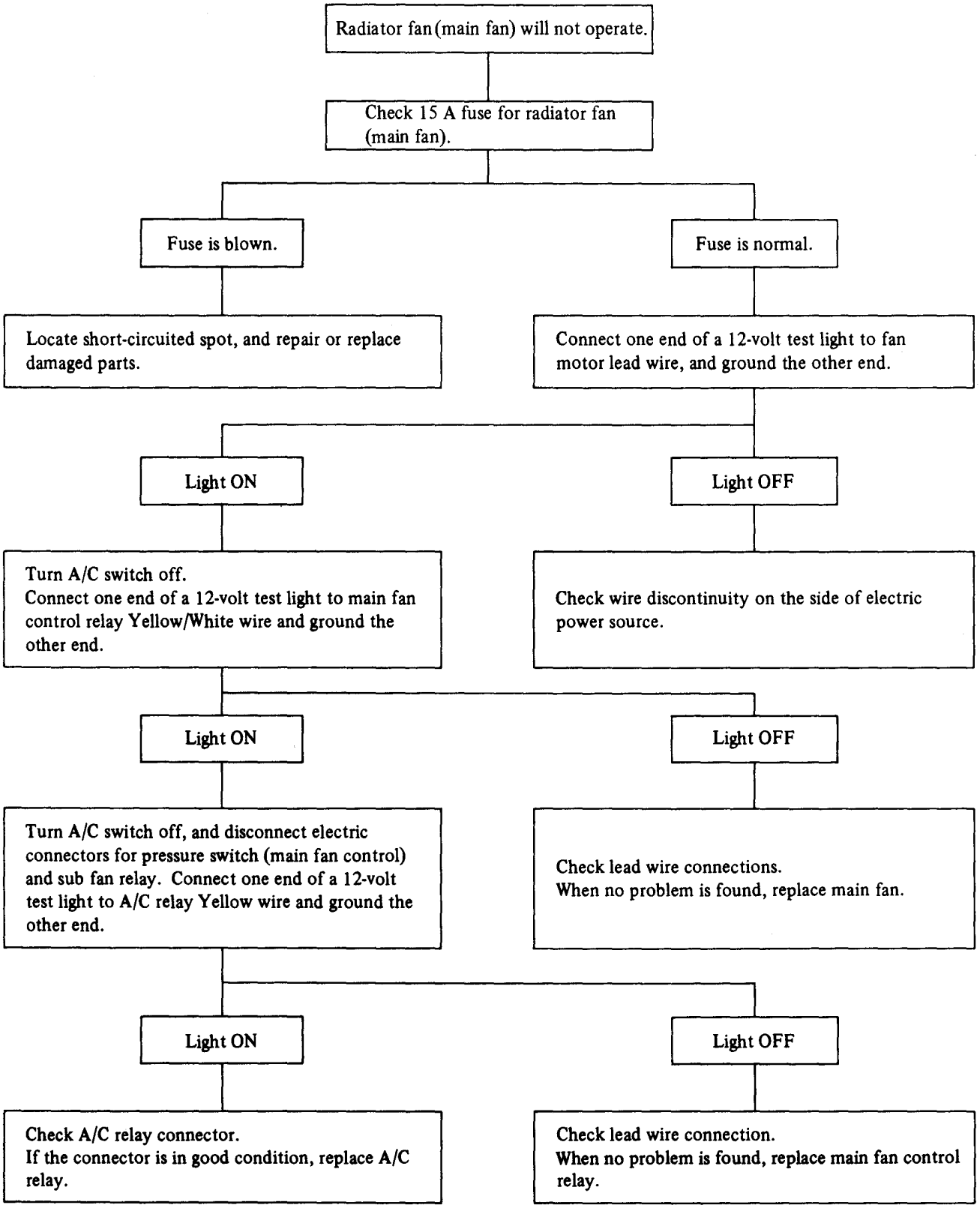

Downloaded from www.Manualslib.com manuals search engine

6) Condenser Fan (Sub-fan) Diagnoses

NOTE:
Follow this chart while referring to the description of the electric system (page 13-16).

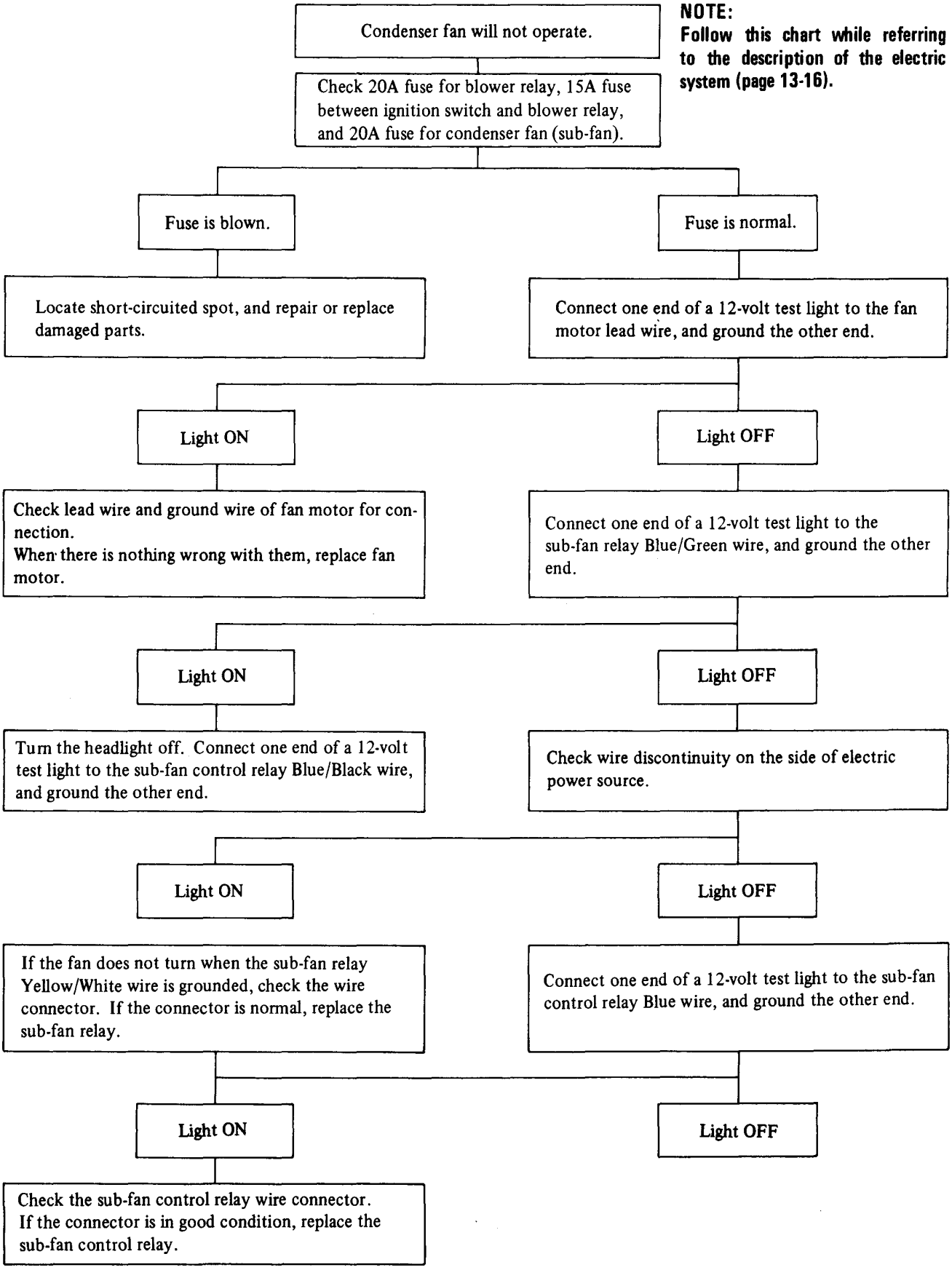

Downloaded from www.Manualslib.com manuals search engine

13-5. Special Tools

Air-conditioning

925770000 (GB339628)	925780000 (GB472430)	925790000 (GB472437)	925800000 (GB350533)
Clutch Hub Wrench	Clutch Hub Puller	Hub Nut Socket	Oil Separator *
Used to hold clutch hub	Used to remove clutch hub	Used to remove clutch hub nut	Used to withdraw oil from refrigeration system
Fig. 13-119 A26-045	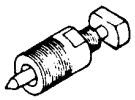 *Fig. 13-120* A26-046	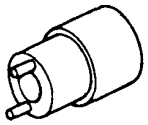 *Fig. 13-121* A26-047	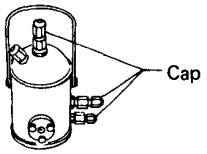 *Fig. 13-122* ST-176
925820000 (GB303961)	925840000 (GF304790)	925850000 (GF304791)	
Flexible Hose *	Double Union *	Connector Pipe *	
(Used with Oil Separator)	(Used with Oil Separator)	(Used with Oil Separator)	
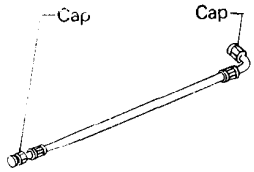 *Fig. 13-123* ST-178	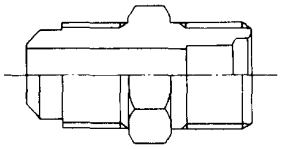 *Fig. 13-124* ST-179	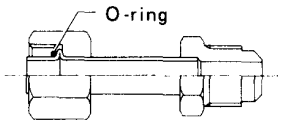 *Fig. 13-125* ST-180	

* : Oil Separator Kit is composed of Oil Separator, Flexible Hose, Double Union and Connector Pipe.

Downloaded from www.Manualslib.com manuals search engine

CHAPTER 14

BODY

		Page
14– 1.	BODY CONSTRUCTION AND DATUM POINTS	14– 2
14– 2.	GLASSES	14–11
14– 3.	DOORS	14–20
14– 4.	REAR GATE	14–35
14– 5.	BODY PARTS AND OUTER ACCESSORIES	14–41
14– 6.	INSTRUMENT PANEL	14–52
14– 7.	SEAT AND BELT	14–55
14– 8.	INNER ACCESSORIES	14–62
14– 9.	SUNROOF (Option)	14–66
14–10.	SPECIAL TOOLS	14–68

SUBARU

Downloaded from www.Manualslib.com manuals search engine

14-1. Body Construction and Datum Points

● Body Construction

NOTE:
Body construction parts for Sedan are as follows. For others they are essentially the same as for Sedan.

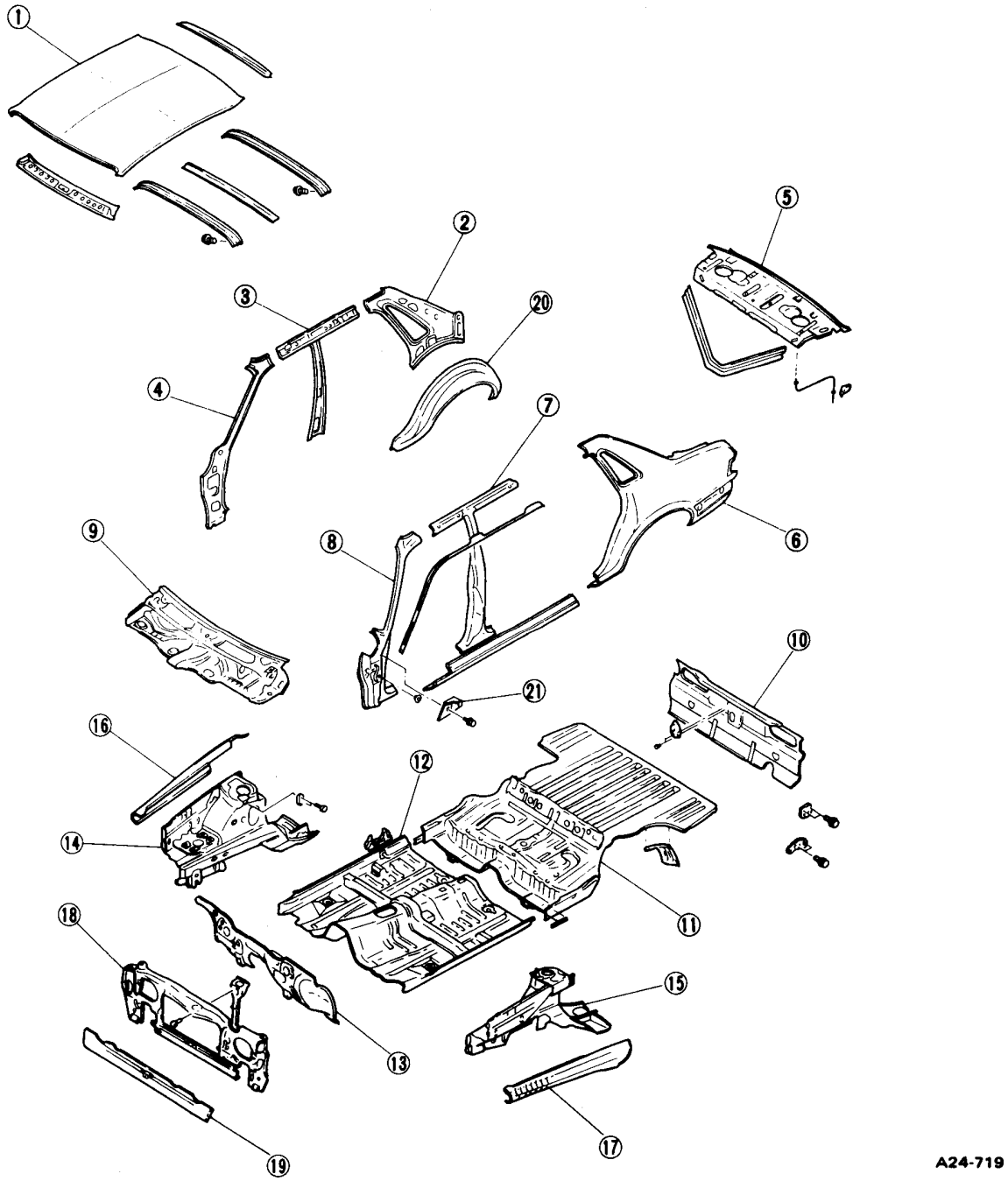

1 Roof
2 Rear quarter panel (Inner)
3 Center pillar (Inner)
4 Front pillar (Inner)
5 Rear shelf
6 Rear quarter panel (Outer)
7 Center pillar (Outer)
8 Front pillar (Outer)
9 Front bulkhead
10 Rear skirt
11 Rear floor
12 Floor
13 Toe board
14 Front wheel apron (R.H.)
15 Front wheel apron (L.H.)
16 Frame (R.H.)
17 Frame (L.H.)
18 Radiator panel
19 Front skirt
20 Rear wheel apron
21 Distance piece

Fig. 14-1 Body construction parts (4-Door Sedan)

Downloaded from www.Manualslib.com manuals search engine

● Body Datum Points

1. Center Structure

1) Measuring Points

NOTE:
Measure dimensions with mounted parts removed.

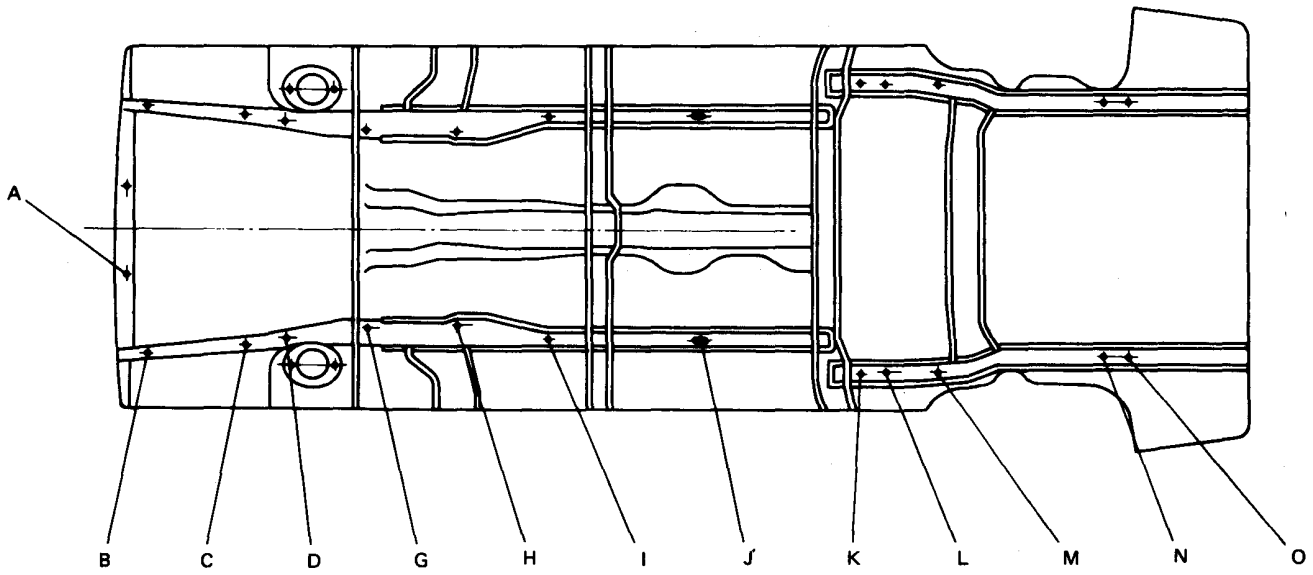

A24-297

A	:	Hole for undergard mounting 8 mm bolt
B	:	Gauge hole of 15 mm (0.59 in) dia.
C, D	:	Holes for front crossmember mounting bolts
G, H	:	Holes for rear crossmember mounting bolts
I	:	Gauge hole of 15 mm (0.59 in) dia.
J	:	20 × 50 mm (0.79 × 1.97 in) elongated hole
K	:	Gauge hole of 20 mm (0.79 in) dia.
L, M	:	Holes for rear suspension mounting bolts
N, O	:	Gauge holes of 22 mm (0.87 in) dia.

Fig. 14-2 Measuring points of center structure

Downloaded from www.Manualslib.com manuals search engine

2) Center Structure Alignment Dimensions

NOTE:
Each dimension indicates a projected dimension between hole centers.

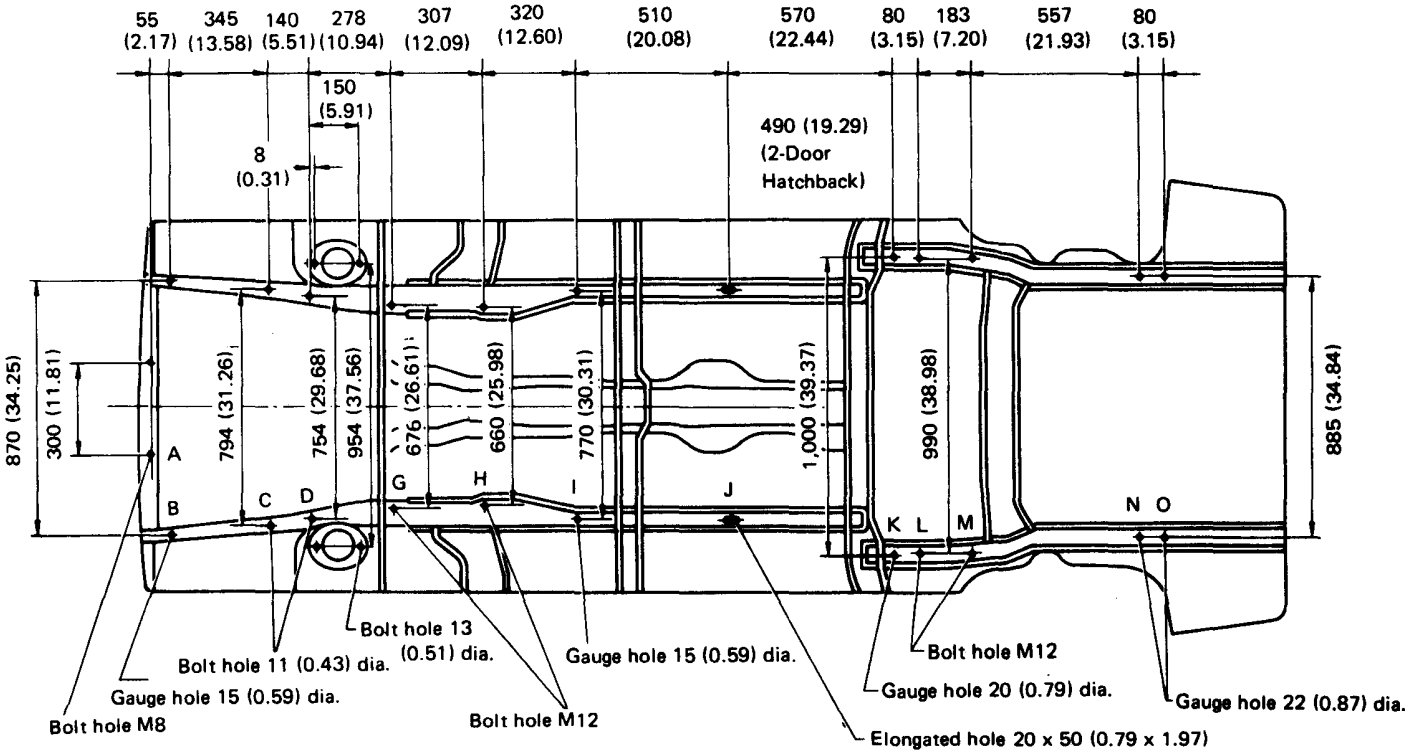

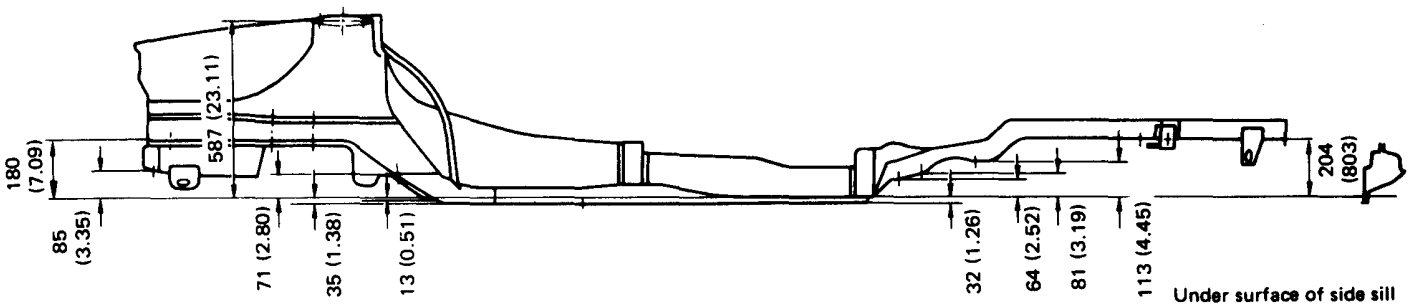

Unit: mm (in)

A24-298

Fig. 14-3 Center structure alignment dimensions

Downloaded from www.Manualslib.com manuals search engine

NOTE:
Each dimension is arranged so that the left and right sides are symmetric.

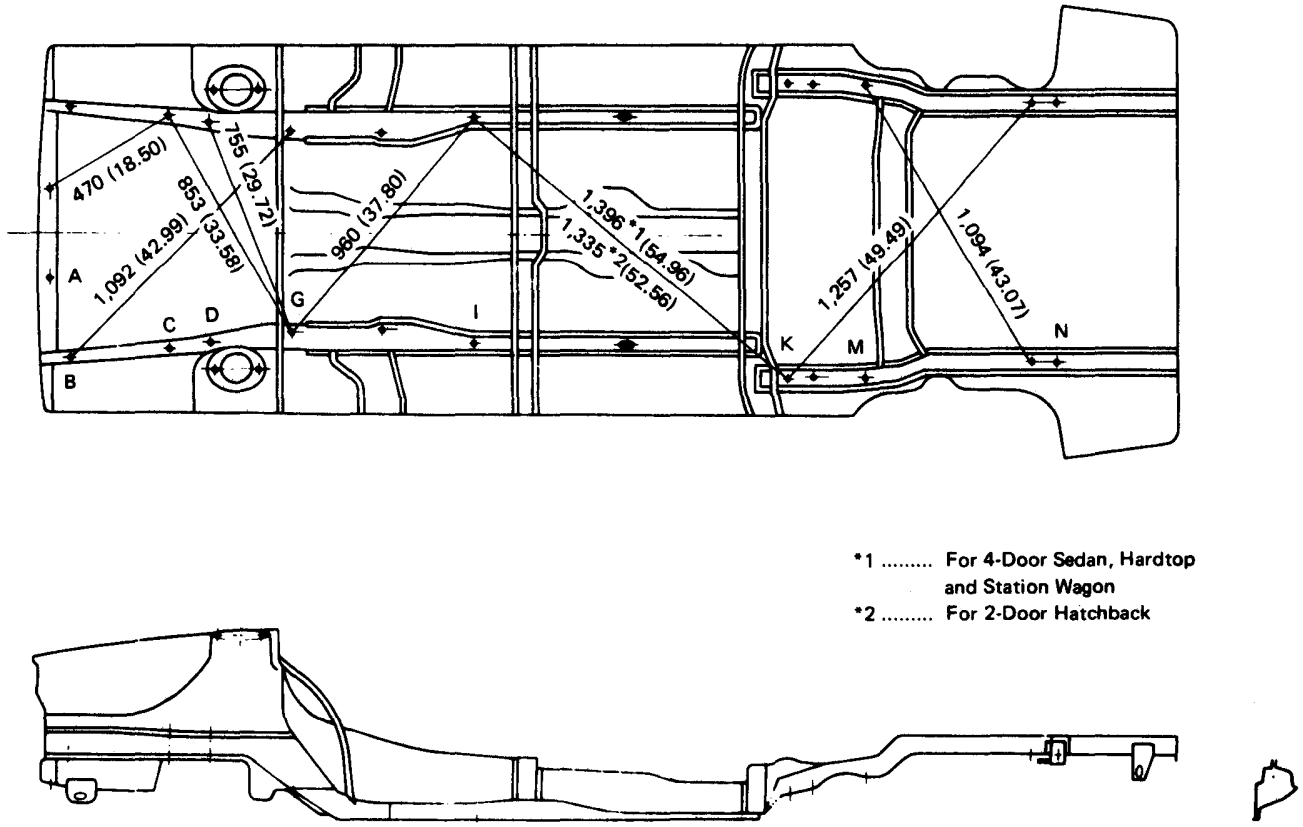

Unit: mm (in)

A24-299

Fig. 14-4 Center structure alignment dimensions

Downloaded from www.Manualslib.com manuals search engine

2. Front Structure

Measuring points and datum dimensions of front structure

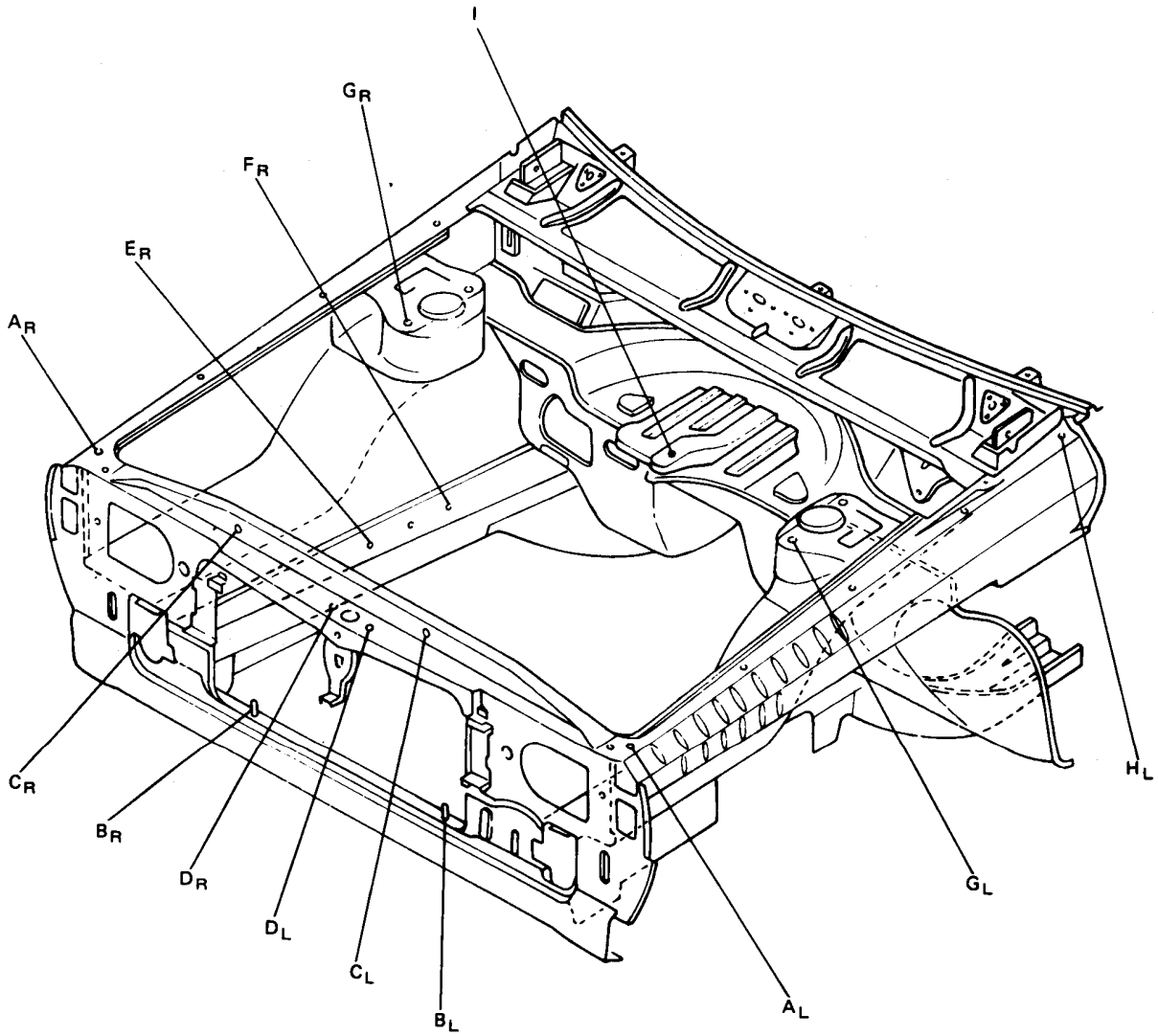

A24-300

Affixed letters L and R indicate left and right side holes respectively.

A_R, A_L ..... Fender set holes [symmetrically arranged]
B_R, B_L ..... Radiator set pin tip centers (asymmetric)
C_R, C_L ..... Radiator set holes [19 mm (0.75 in) dia., asymmetric]
D_R, D_L ..... Hood lock set holes (asymmetric)
E_R, E_L ..... Front crossmember set holes [11 mm (0.43 in) dia., symmetric]
F_R, F_L ..... Front crossmember set holes [11 mm (0.43 in) dia., symmetric]
G_R, G_L ..... Strut mount front holes (symmetric)
H_R, H_L ..... Fender set holes (symmetric)
I ..... Spare tire set hole centerx (center of vehicle)

Fig. 14-5 Measuring points of front structure

Downloaded from www.Manualslib.com manuals search engine

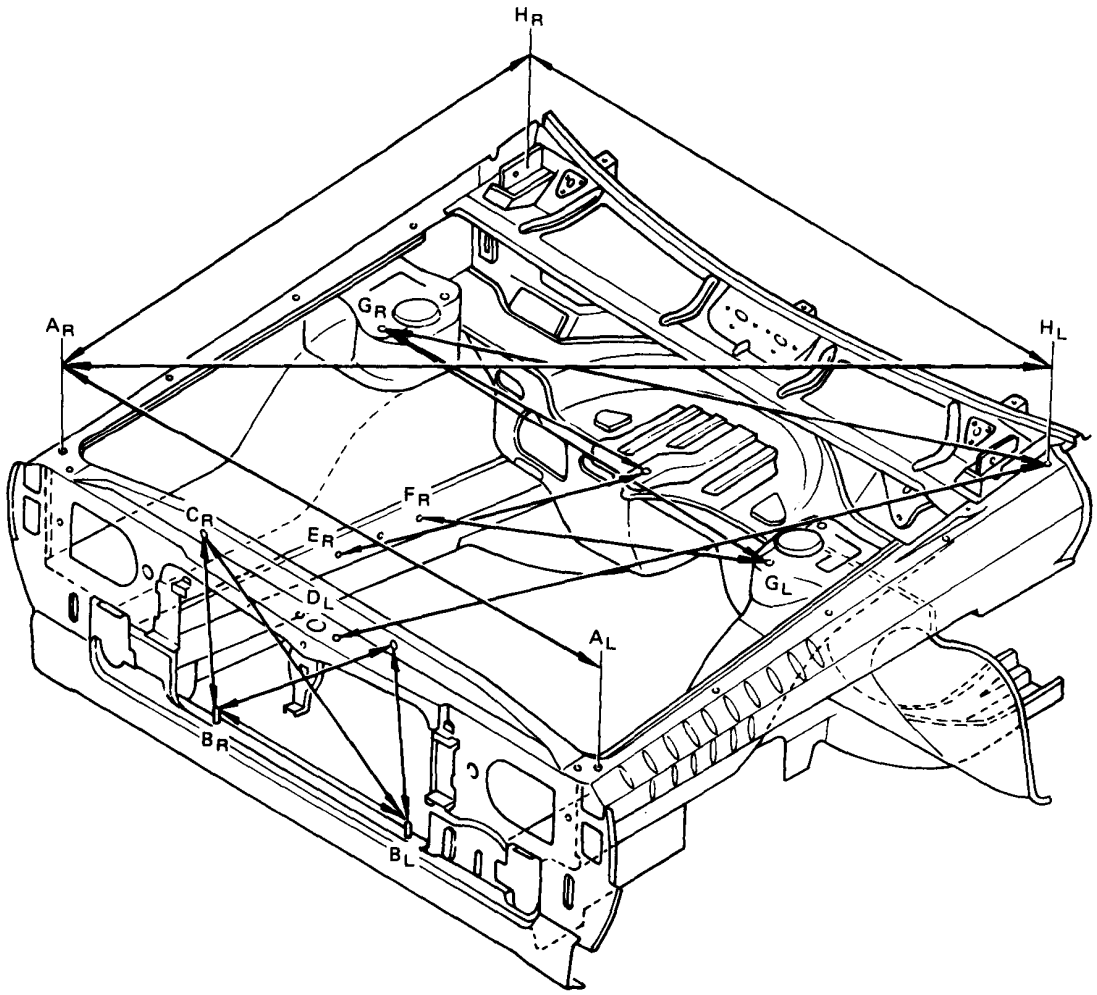

A24-301

Unit : mm (in)

AR – HR AL – HL	AR – AL	HR – HL	AR – HL AL – HR	BR – BL	CR – CL	BR – CL
977 (38.46)	1275 (50.20)	1317 (51.85)	1623 (63.90)	480 (18.90)	425 (16.73)	554 (21.81)

Unit : mm (in)

BL – CR	DR – HR	DL – HL	FR – GL FL – GR	GR – GL	ER – I EL – I	GR – I GL – I
605 (23.82)	1228 (48.35)	1217 (47.91)	920 (36.22)	954 (37.56)	570 (22.44)	511 (20.12)

NOTE:
Each dimension shows actual distance between hole centers.

Fig. 14-6 Front structure dimensions

Downloaded from www.Manualslib.com manuals search engine

3. Front Windshield and Rear Window

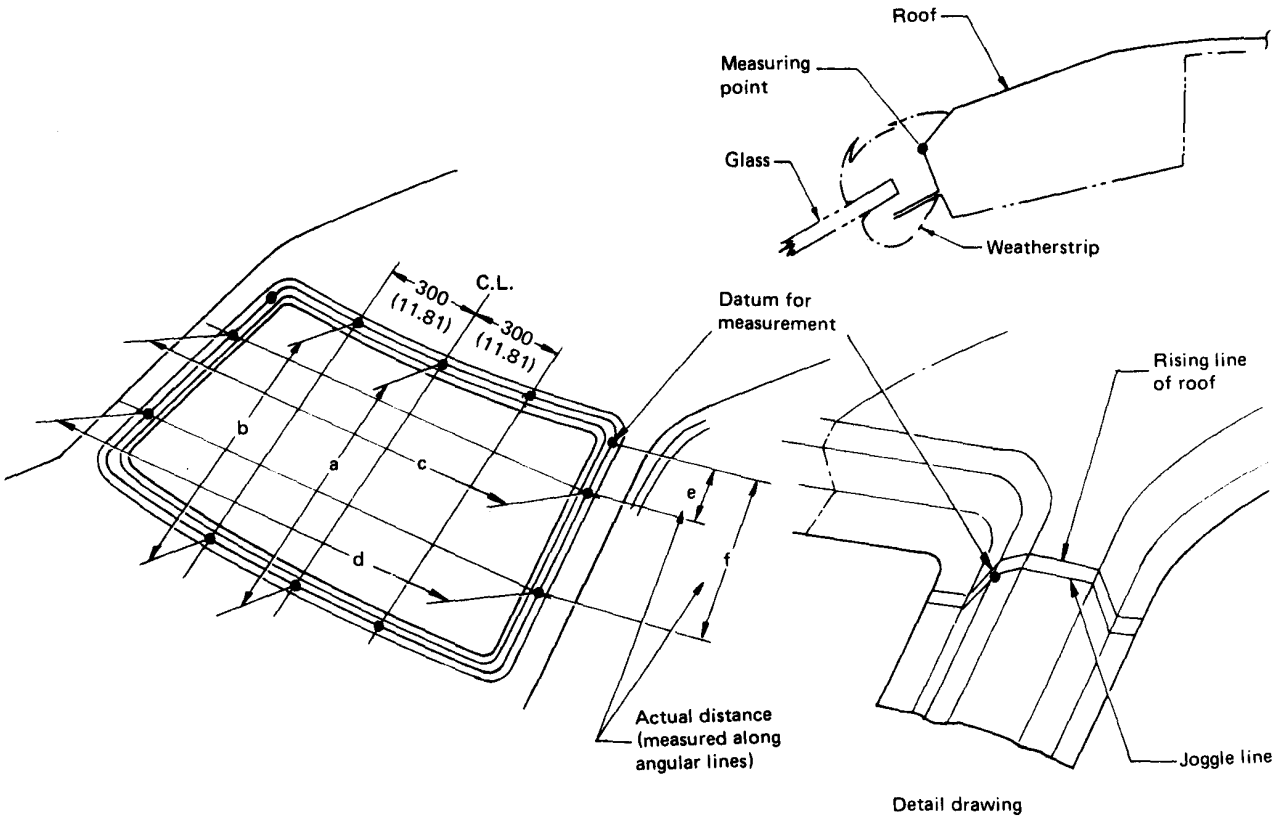

Unit: mm (in)

Unit: mm (in)

	Front windshield		Rear window		Remarks
	Hatchback Sedan Station Wagon Open M.P.V.	Hardtop	Sedan	Hardtop	
a	654 (25.75)	659 (25.94)	593 (23.35)	660 (25.98)	Standard dimensions
b	656 (25.83)	655 (25.79)	590 (23.23)	665 (26.18)	
c	1,127 (44.37)	1,128 (44.41)	1,094 (43.07)	1,128 (44.41)	
d	1,300 (51.18)	1,297 (51.06)	1,277 (50.28)	1,330 (52.36)	
e	45 (1.77)	34 (1.34)	32 (1.26)	30 (1.18)	(Datum for measurement)
f	374 (14.72)	370 (14.57)	352 (13.86)	415 (16.34)	

A24-724

Fig. 14-7

Downloaded from www.Manualslib.com manuals search engine

4. Doors

• Sedan and Station Wagon

Each dimension shows actual distance.

mm (in)

L_1	L_2	L_3	L_4
833 (32.80)	1,380 (54.33)	858 (33.78)	1,540 (60.63)

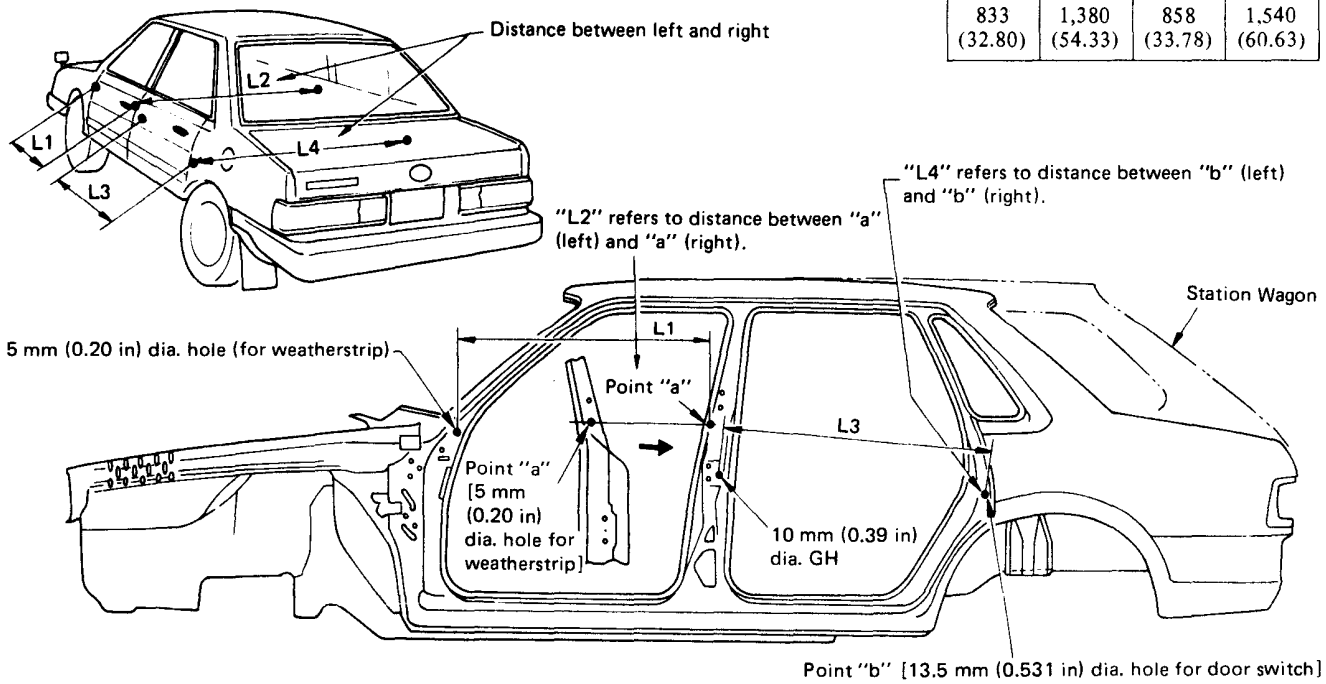

A24-725

Fig. 14-8

• Hatchback, Hardtop and Open M.P.V.

Each dimension shows actual distance.

mm (in)

L_1	L_2
1,066 (41.97)	1,350 (53.15)

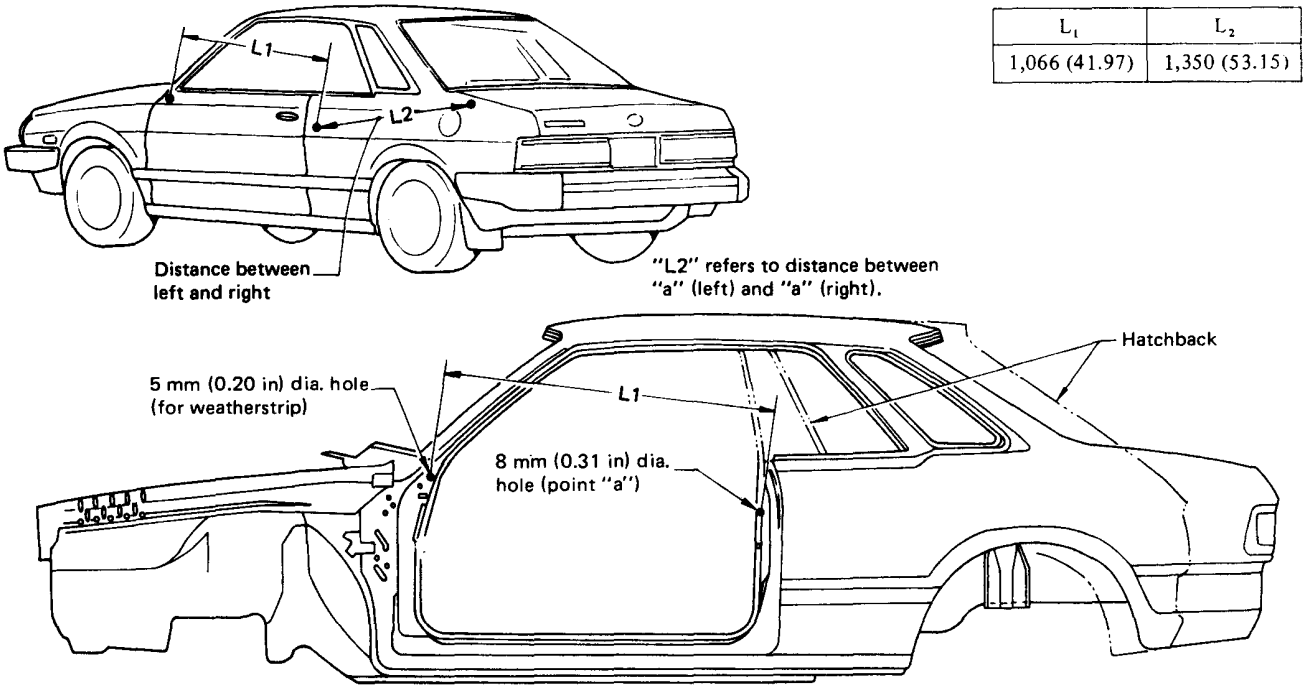

A24-726

Fig. 14-9

Downloaded from www.Manualslib.com manuals search engine

5. Rear Gate

• Hatchback

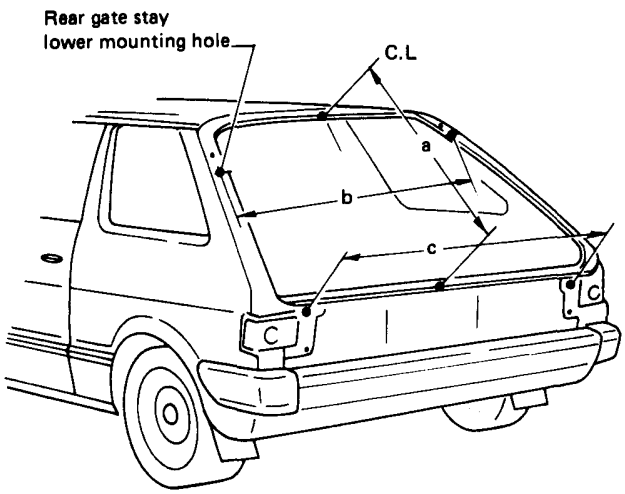

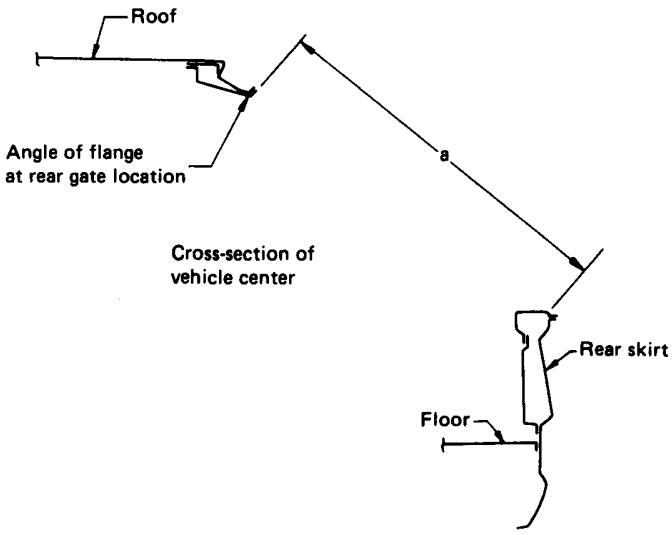

mm (in)

a	b	c
833 (32.80)	1,105 (43.50)	1,250 (49.21)

Fig. 14-10

A24-727

• Station Wagon

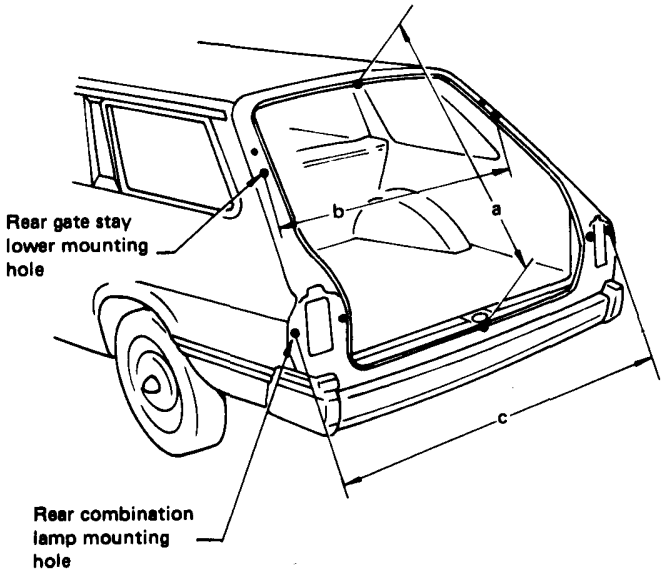

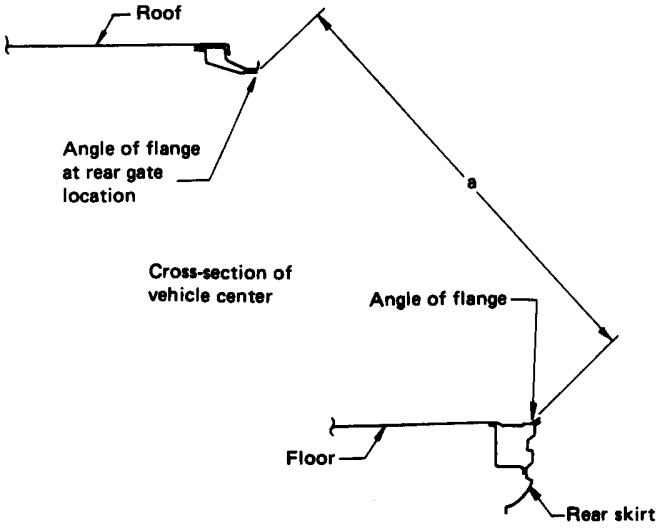

mm (in)

a	b	c
1,001 (39.41)	1,136 (44.72)	1,476 (58.11)

Fig. 14-11

A24-728

Downloaded from www.Manualslib.com manuals search engine

- **BRAT**

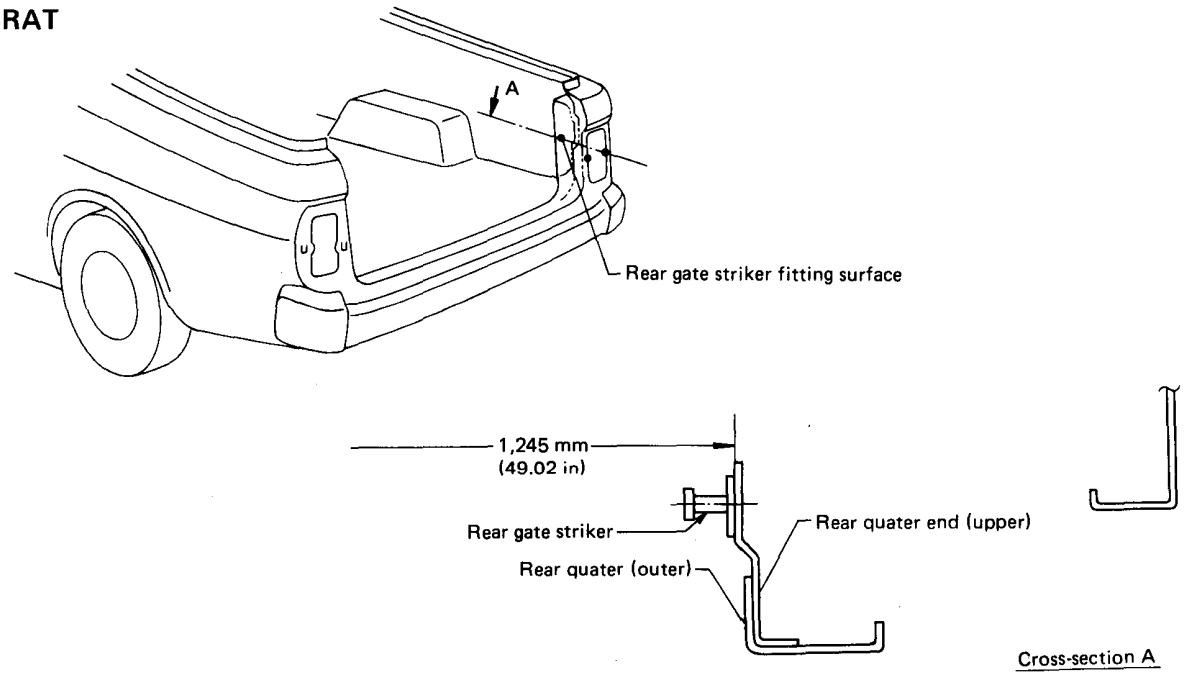

Fig. 14-12

A24-794

14-2. Glasses

1. Front Windshield and Rear Window

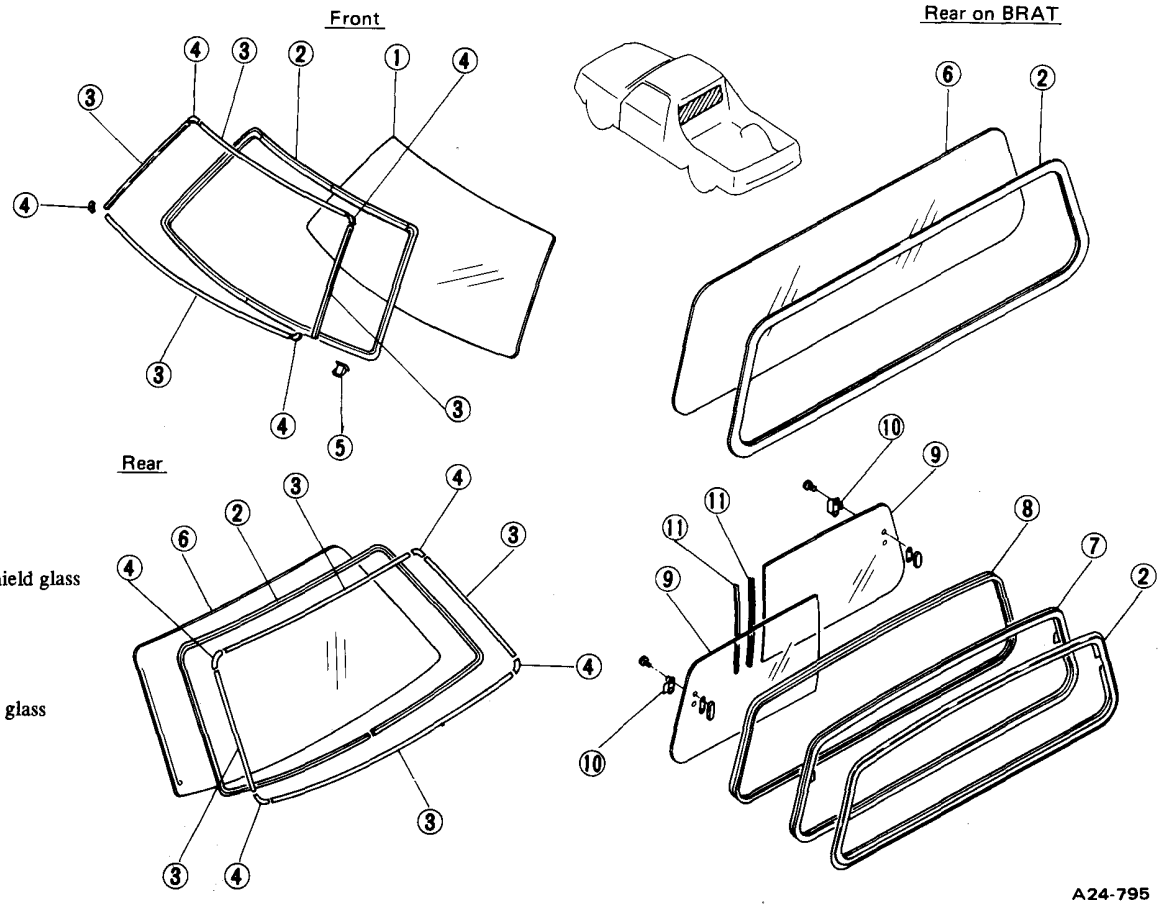

1 Front windshield glass
2 Weatherstrip
3 Moulding
4 Joint
5 Grommet
6 Rear window glass
7 Sash
8 Rail
9 Slide glass
10 Lock
11 Channel

Fig. 14-13

A24-795

Downloaded from www.Manualslib.com manuals search engine

• Front

1) Removal

1) Raise windshield wiper arm forward.
2) Turn up the lip of weatherstrip from the passenger compartment, and force it out of body flange.
This is to be carried out on the top and along about half of the side of the glass.
3) Push out glass along with weatherstrip and mouldings from the passenger compartment.

NOTE:
a. Apply an even force to glass at the portion near weatherstrip.
b. If weatherstrip will not be reused, cut it off with a knife and take it out.

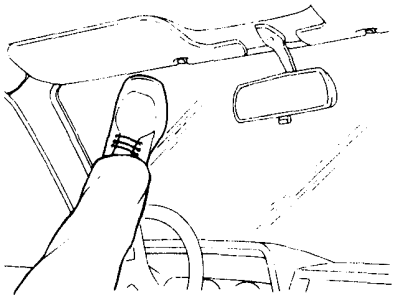

A24-415

Fig. 14-14 Pushing out windshield

4) Detach mouldings from weatherstrip.

2) Installation

1) Wipe sealing compound off weatherstrip with kerosene.
2) Attach weatherstrip to glass, and then fit work cords into the grooves of weatherstrip.

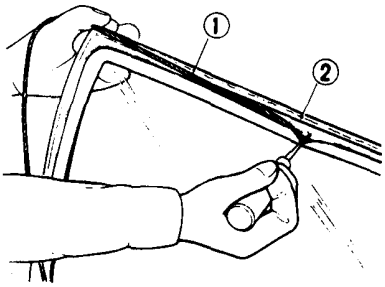

1 Work cord
2 Weatherstrip

A24-032

Fig. 14-15 Fitting work cords

NOTE:
a. Overlap the end of work cord at the bottom of glass.

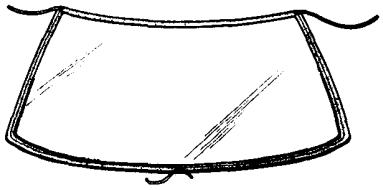

A24-416

Fig. 14-16

b. After work cords are fitted to weatherstrip, apply kerosene to the entire edge of weatherstrip.

3) Fit mouldings into the groove of weatherstrip.
4) Position glass properly from outside, and bring work cords into passenger compartment.
5) Apply kerosene along the entire lip of weatherstrip.
6) Pull out the lip of weatherstrip for the end of roof trim, and then fit weatherstrip in such a manner that the lip moves over body flange while tapping glass with hand from the outside and pulling work cord from passenger compartment.

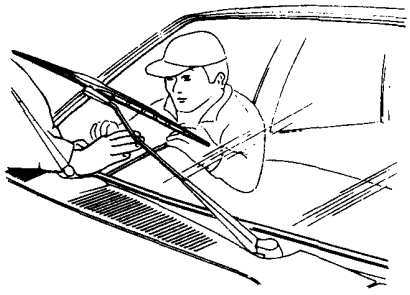

A24-418

Fig. 14-17 Installing windshield

NOTE:
a. Work should proceed from the center of the glass to the left and right.
b. Push or tap the glass by hand but don't tap mouldings.
c. Fit weatherstrip correctly to the body.

7) Insert a spatula in between weatherstrip and the flange of body, and move it along the entire length of weatherstrip.

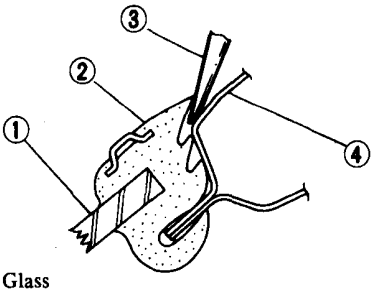

1 Glass
2 Weatherstrip
3 Spatula
4 Body

A24-419

Fig. 14-18 Adjusting weatherstrip

8) Settle the whole glass in the body by tapping it with hand or a rubber hammer.
9) Apply sealing agent (Starseal U-70).
Wipe off exuded sealing agent.

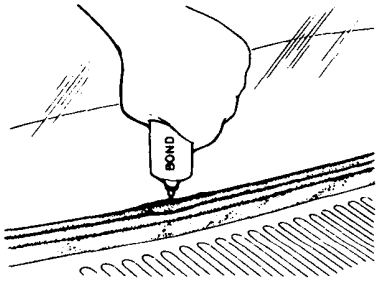

A24-089

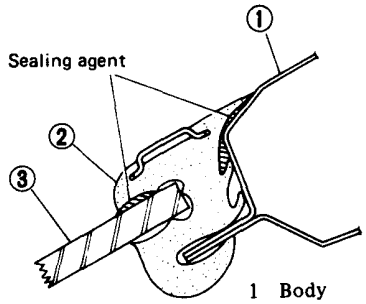

1 Body
2 Weatherstrip
3 Glass

A24-420

Fig. 14-19 Applying sealing agent

• Rear

Removal and installation of rear window glass can be carried out in the same manner as in the front windshield.

NOTE:
When replacing slide glass on 4WD Open M.P.V. GL model, insert (new) slide glass into sash while expanding it.

Downloaded from www.Manualslib.com manuals search engine

2. Side Window on Hatchback

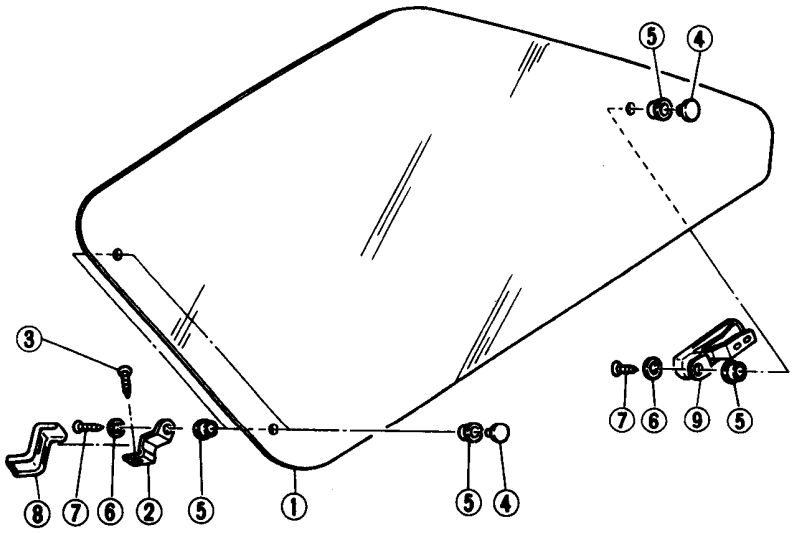

1 Side window glass
2 Hinge plate
3 Flange screw
4 Nut plate
5 Packing
6 Rosette
7 Screw
8 Hinge cover
9 Lock

A24-428

Fig. 14-20 Component parts

1) Adjustment of Glass Position

1) Adjusting measures

a. Shifting glass position is made by loosening screws fixing hinges and/ or lock to the body.

b. Rotation of the glass in the vertical plane is made by loosening screws fixing the glass to the hinge and/or lock.

2) Measuring points of gap.

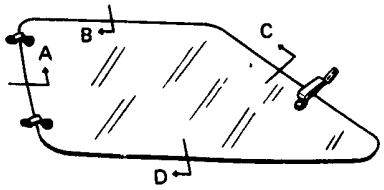

A24-434

Fig. 14-21 Measuring points of gap

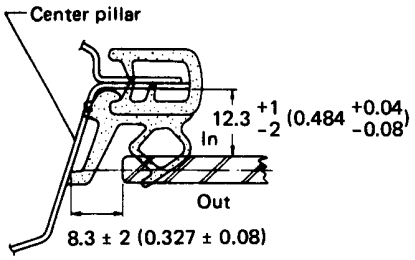

Unit : mm (in)

A24-435

Fig. 14-22 Cross section of A ~

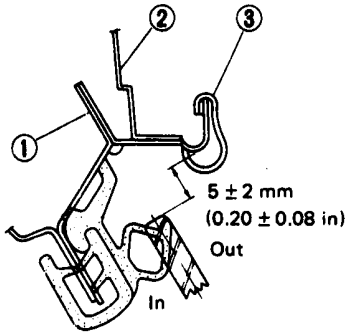

1 Roof side rail
2 Roof
3 Drip rail moulding

A24-436

Fig. 14-23 Cross section of B ~

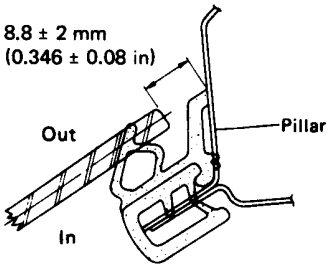

A24-437

Fig. 14-24 Cross section of C ~

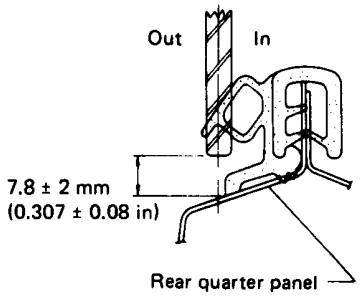

A24-438

Fig. 14-25 Cross section of D ~

2) Removal

1) Detach hinge covers by prying them off with screwdriver.

2) With the glass opened halfway, remove two screws fixing lock.

3) Remove hinge set screws.

NOTE:

Although the glass won't fall in this state (in stoppage), remove glass by holding it with one hand so that the glass does not fall accidentally.

4) Carefully move the glass to the outside and take it out from the rear.

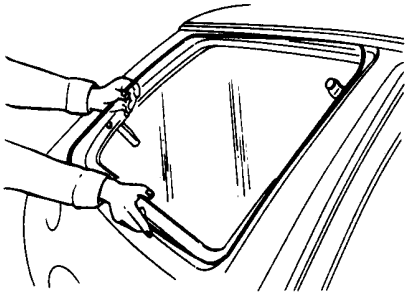

A24-432

Fig. 14-26 Removing side window glass

5) Remove hinge plates and lock assembly from the glass after placing it on a rag, mat or the like so as to protect it from damage.

6) Remove weatherstrip from flange of body.

3) Installation

1) Install weatherstrip as follows.

a. First fit the rear lower corner of weatherstrip down to the bottom so that it mates properly to the recess in the body.

Downloaded from www.Manualslib.com manuals search engine

b. Second, fit the front upper corner in the same manner as above.
c. Then fit remaining portion to the flange.

NOTE:
a. Fit weatherstrip by tapping with rubber hammer.
b. Never hit weatherstrip too strongly, otherwise the flange might be deformed.
c. Since the groove of the weatherstrip serves to fix the trim panel, fit weatherstrip to the body flange with depressing trim panel toward the body flange so as to place it underneath the weatherstrip.

2) Install hinges and lock assembly to the glass with screws.

NOTE:
a. To engage nut plate and hinge or lock, align flats of them.
b. Tighten the screws temporarily in this step, and tighten securely after glass position adjustment is made.

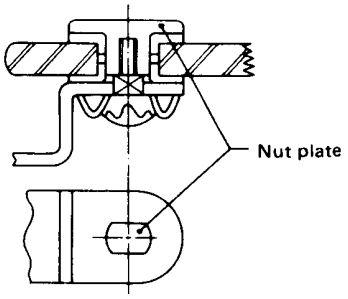

A24-433

Fig. 14-27 Aligning flats of nut plate and hinge or lock

3) Install the glass assembly to the body by tightening screws while adjusting the glass position.

3. Side Window on Hardtop

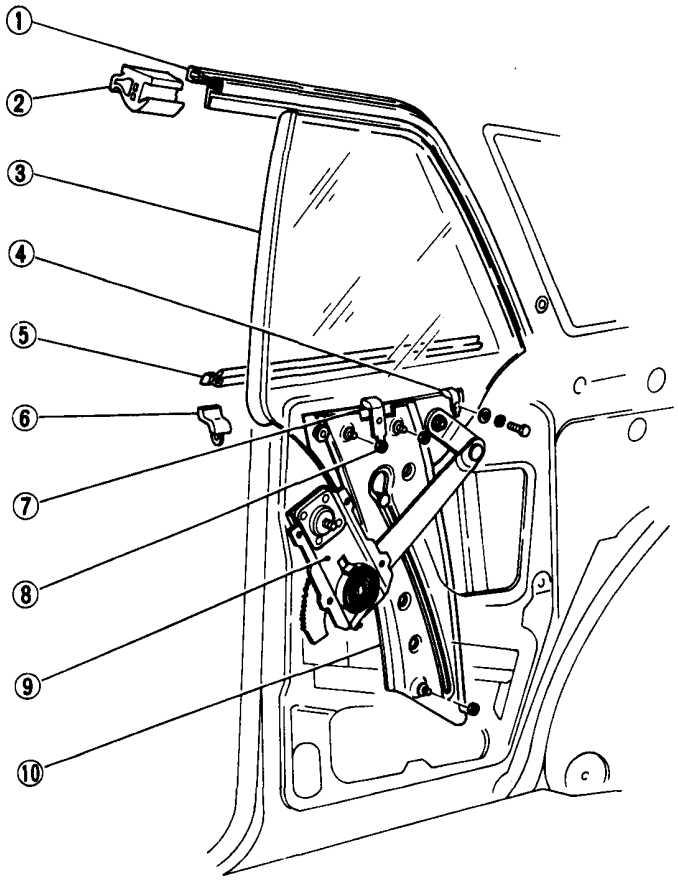

1 Retainer
2 Roof side weatherstrip
3 Side window weatherstrip
4 Stopper B
5 Outer weatherstrip
6 Corner patch
7 Stopper A
8 Adjust nuts
9 Regulator
10 Guide plate

A24-439

Fig. 14-28 Component parts

1) Adjustment

Adjustment of the side window glass is carried out with roof side weatherstrip dismounted.

Since adjustment of side window glass depends upon adjustment of door glass adjustment, first adjust door glass according to the door glass adjusting procedure.

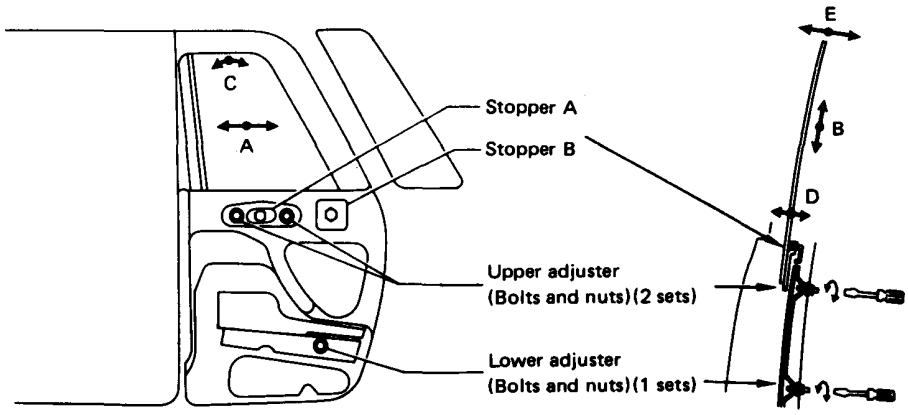

Fig. 14-29 Side window glass adjustment

A24-448

Downloaded from www.Manualslib.com manuals search engine

Movement of glass	Adjusting measure	Adjustable length of adjuster
A. Frontward/rearward shift C. Frontward/rearward inclination	Moving positions of guide plate by loosening three nuts of upper and lower adjuster	5 mm (0.20 in) forward & 5 mm (0.20 in) rearward
B. Uppermost position	Moving positions of stopper A and B	5 mm (0.20 in) upward & 5 mm (0.20 in) downward
D. Inward/outward shift of glass bottom at uppermost position	Screw or unscrew two bolts of upper adjuster	3.5 mm (0.138 in) inward & 3.5 mm (0.138 in) outward
E. Inward/outward shift of glass top at uppermost position	Screw or unscrew one bolt of lower adjuster	8 mm (0.31 in) inward & 8 mm (0.31 in) outward

NOTE:
When frontward/rearward shift adjustment of door glass is necessary, refer to door glass adjustment for Hardtop, because adjusting measure for Hardtop is different from that for 4-Door Sedan and Station Wagon.

A Adjustment of contact pressure

1) Close the door glass all the way, and temporarily adjust the gaps to the dimensions shown in the following figure by moving side window glass upward/downward and frontward/rearward.
(Shift door glass frontward or rearward by adjusting rear sash of door as reqired. Refer to the door section.)

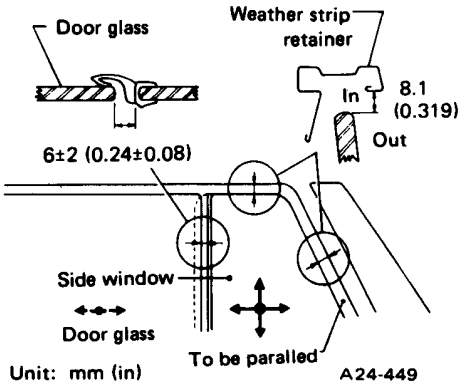

Fig. 14-30 Dimensions of gaps

2) Fix the stopper A.

Flange nut tightening torque	7 – 9 N·m (0.7 – 0.9 kg-m, 5.1 – 6.5 ft-lb)

3) Open door glass all the way.
4) Position the glass at the window shoulder as shown in the following figure by revolving two bolts of upper adjuster with screwdriver.

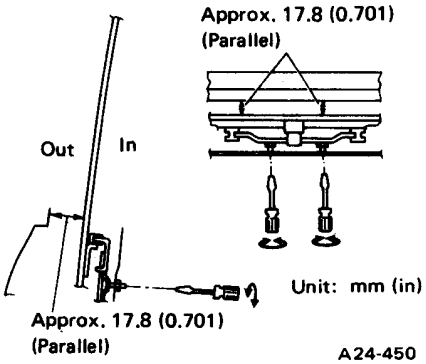

Fig. 14-31 Adjusting contact pressure at window shoulder

Then make sure that the gap between glass and weatherstrip retainer at rear pillar corresponds to the dimension shown in the following figure. Adjust the gap by upper adjust bolt, if necessary.

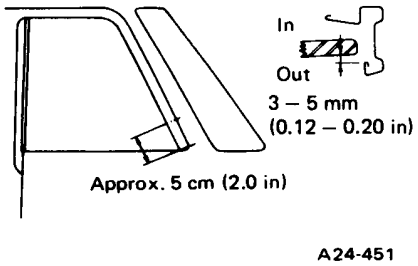

Fig. 14-32 Adjusting contact pressure at rear pillar

5) Adjust the gap between glass and weatherstrip retainer at the top of the glass to the dimension shown in the following figure by revolving the bolt of lower adjuster.

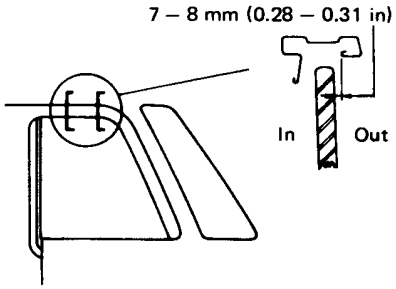

Fig. 14-33

B Adjustment of gap

1) Loosen two nuts of upper adjuster and one nut of lower adjuster.
2) Applying a little upward force to the glass by the regulator handle, adjust the position and inclination of the glass so that the gap between the rear edge of glass and weatherstrip retainer corresponds the dimension shown in the following figure, and then fix three nuts and stopper B.

Tightening torque

Flange nuts of adjuster	18 – 23 N·m (1.8 – 2.3 kg-m, 13 – 17 ft-lb)
Hex. bolt fixing stopper B	5 – 7 N·m (0.5 – 0.7 kg-m, 3.6 – 5.1 ft-lb)

Downloaded from www.Manualslib.com manuals search engine

NOTE:

a. The above-mentioned adjustment should be carried out with a slight force applied to regulator handle so as to eliminate free play.

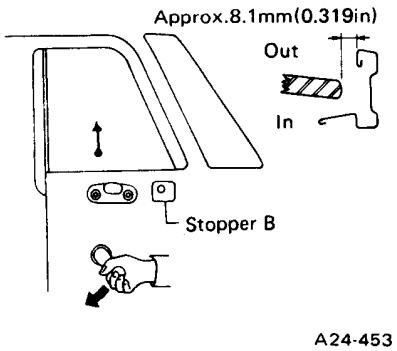

Fig. 14-34 Gap adjustment of glass rear edge

b. Make sure that stopper A and B come in uniform contact with glass holder.

c. For readjusting the gap at the top of the glass, carry out A–1) and 2), and then B–1) and 2). If this order is neglected, the glass might incline forward, whereby proper gap won't be obtained.

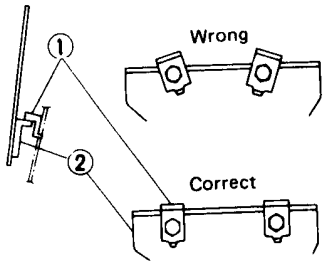

Fig. 14-35 Fixing stopper A and B

3) Make sure that the gap between door glass and weatherstrip on side window glass has the same dimension as shown in the following figure. If necessary, shift the door glass frontward or reaward by adjusting rear sash.

(Refer to door glass.)

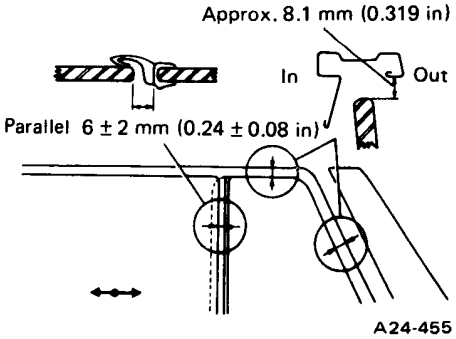

Fig. 14-36 Confirmation of gap adjustment

4) Make sure that the gaps at side window glass are provided in accordance with above figure.

C Check of side window adjustment

1) After adjusting side window glass, fit roof side weatherstrip securely to the retainer.

2) Confirm the following items so as to prevent water leakage or the like trouble.

a. The whole edge of glass is covered with the lip of weatherstrip, leaving no clearance.
If there is a clearance, the gap is inproperly adjusted.

b. No clearance appears by slightly pushing the glass from the passenger compartment.
If a clearance does, the contact pressure is insufficiently adjusted.

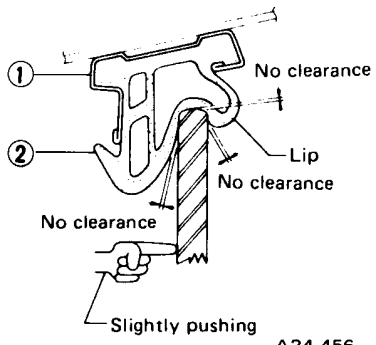

1 Weatherstrip retainer
2 Roof side weatherstrip

Fig. 14-37 Checking adjustment

NOTE:

If the contact pressure is excessive, erroneous engagement with the weatherstrip, abnormal wear, increase in force needed to operate the regulator or a similar trouble might be caused.

c. Door glass rear edge does not contact to the shoulder of weatherstrip on side window glass.
If it contacts, the gap is improperly adjusted.

d. There is no clearance between door glass and weatherstrip on side window.
If there is clearance, the contact pressure is insufficiently adjusted.

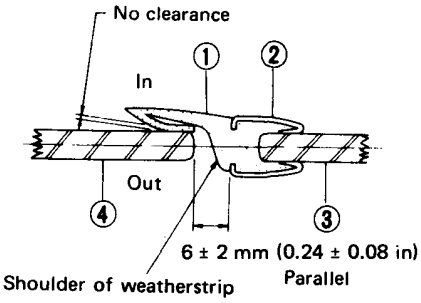

1 Weatherstrip on side window
2 Moulding
3 Side window glass
4 Door glass

A24-457

Fig. 14-38 Checking adjustment

e. The weatherstrip on side window glass is not bent to outside of door glass upon operating door window regulator or side window regulator.
If it is the gap or contact pressure is improperly adjusted.

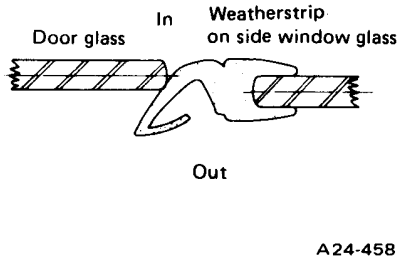

Fig. 14-39 Bending of weatherstrip

3) After installing sealing cover, sprash or shower water to make sure that there is no leakage into the compartment.

Downloaded from www.Manualslib.com manuals search engine

2) Removal

NOTE:

a. When removing the parts, carefully protect the body paint, glass, etc. from damage.

b. Be careful not to damage trim panel, sealing cover, etc.

1) Remove rear seat cushion and back rest.
2) Remove seat belt shoulder anchor.
3) Detach regulator handle.
4) Detach arm rest, rear pillar trim, upper trim panel and lower trim panel.
5) Remove seat belt retractor, disconnect electric connector for door switch, and then detach sealing cover.
6) Lower side glass fully, and remove one tapping screw fixing outer weatherstrip from the inside. Also remove two tapping screws fixing grille from the outside. Lift grille slightly and pull out outer weatherstrip to the forward.
7) Close the glass halfway and disconnect glass holder from regulator arm.

NOTE:

Be careful not to drop the nut into interior of body panel.

8) Remove stopper B and three adjuster nuts. Don't remove stopper A in this step.

NOTE:

It is recommended to put a mark to recognize its original position.

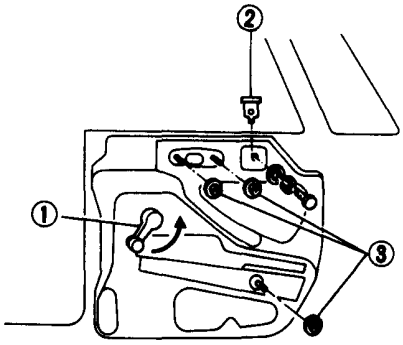

A24-445

1 Regulator handle
2 Stopper B
3 Adjusting nuts

Fig. 14-40 Removing stopper and adjuster nut

9) Lower regulator arm by turning regulator handle so as to facilitate removing the side window glass.
10) Lift side window glass up to a position 10 to 15 cm (approx. 5 in) below the roof, and then remove it from front opening of the window together with guide plate by turning it forward.

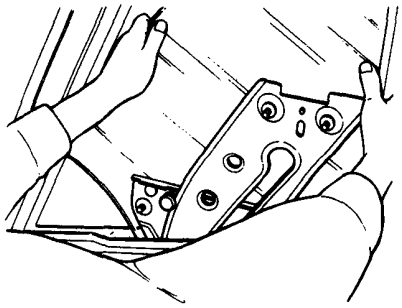

A24-446

Fig. 14-41 Removing side window glass

NOTE:

In this case, keep adjust bolt fully screwed in the guide plate so as to facilitate removing side window glass. However, it is recommended to mark the set position of the adjust bolt to make adjustment easy.

11) Remove four bolts fixing regulator, and then take out the regulator from the work hole.

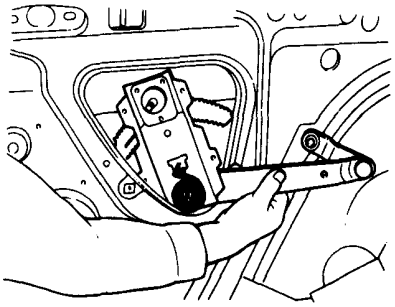

A24-447

Fig. 14-42 Removing regulator

3) Installation

NOTE:

Prior to installation, it is necessary to check the following items.

a. Deformation or crack on weatherstripping.

b. Wear or damage on glass holder roller.

c. Excessive free play or damage on the parts of regulator.

d. Lubrication on regulator and guide plate.

1) Install regulator in position with four bolts.

Torque	5 – 7 N·m (0.5 – 0.7 kg-m, 3.6 – 5.1 ft-lb)

2) Position side window glass along with guide plate, and tighten the 3 adjusting nuts which fix the guide plate.

Torque	18 – 23 N·m (1.8 – 2.3 kg-m, 13 – 17 ft-lb)

NOTE:

When mounting side window glass in combination with guide plate, carefully protect body paint and glass from damage. Pay special attention not to damage the rubber parts of weatherstripping. Otherwise, water might leak in.

3) Attach stopper B with bolt and washers.

Torque	5 – 7 N·m (0.5 – 0.7 kg-m, 3.6 – 5.1 ft-lb)

4) Tighten flange nut to connect regulator arm with glass holder.

Torque	7 – 9 N·m (0.7 – 0.9 kg-m, 5.1 – 6.5 ft-lb)

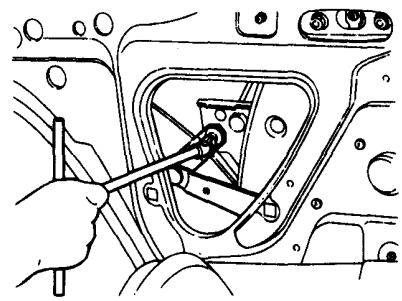

A24-444

Fig. 14-43

Downloaded from www.Manualslib.com manuals search engine

5) Attach outer weatherstrip and corner patch.
6) Attach sealing cover, connect electric connector for door switch, and then install seat belt retractor.

NOTE:
Attach sealing cover properly to prevent water leakage.

7) Attach lower trim panel, upper trim panel, rear pillar trim and arm rest.

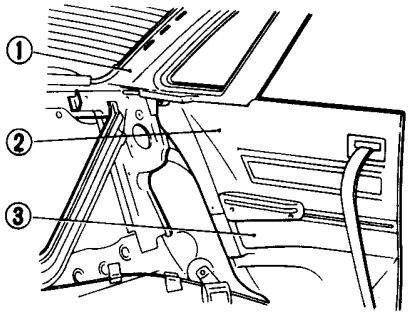

A24-441

1 Rear pillar trim
2 Upper trim panel
3 Lower trim panel

Fig. 14-44

8) Attach regulator handle.
9) Install seat belt shoulder anchor.
10) Install rear seat cushion and back rest.

4) Power Window (Option)

Switches for power window are provided on upper trim panels instead of window regulator handles, and a window regulator has a electric motor. Removal, installation and adjustment procedures are common to the side window with (manual) window regulator.

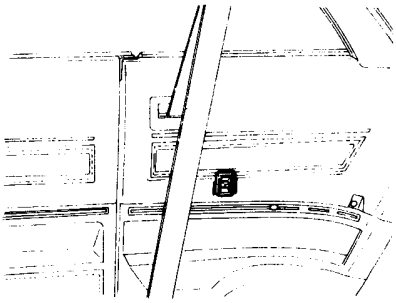

A24-690

Fig. 14-45 Switch for power window

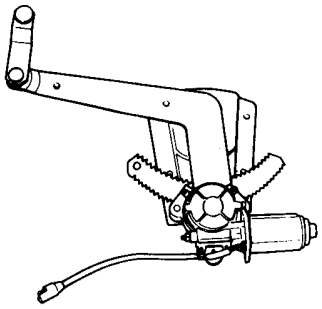

A24-691

Fig. 14-46 Window regulator for power window

NOTE:
a. When removing upper trim panel, disconnect electric wires at connectors.

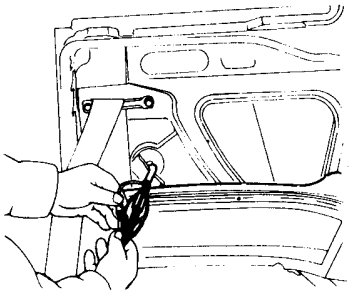

A24-692

Fig. 14-47 Electric wires and connectors

b. When taking out window regulator, also disconnect electric wire at connector.

4. Rear Quarter Window on Sedan and Hardtop

1) Removal

1) Remove inner trim.
2) Remove rear pillar moulding or opera grille.
3) Remove rear quarter glass in the same manner as windshield.

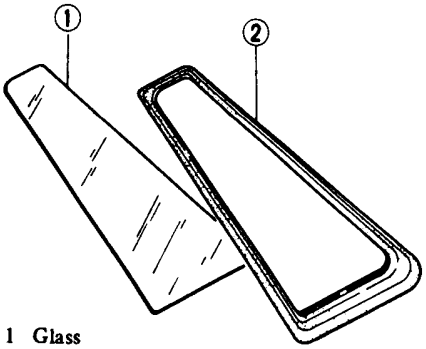

1 Glass
2 Weatherstrip

A24-421

Fig. 14-48 Rear quarter glasses

2) Installation

Install rear quarter glass in the same manner as windshield.

NOTE:
a. Overlap the work cord at center of front edge of rear quarter glass.
b. Apply a sealing agent (Cemedine #366E) as shown following figure.
c. Make sure that there is no gap between weatherstrip and rear pillar moulding.

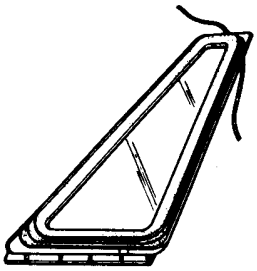

A24-422

Fig. 14-49 Setting work cord

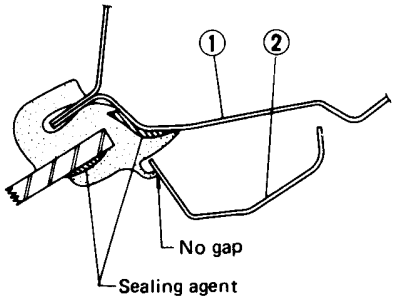

1 Rear pillar
2 Rear pillar moulding

A24-423

Fig. 14-50 Sealing of rear quarter glass (4-Door Sedan)

Downloaded from www.ManualsLib.com manuals search engine

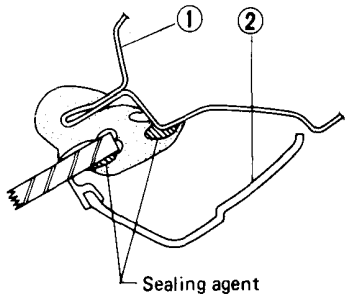

1 Rear pillar
2 Opera grille

A24-424

Fig. 14-51 Sealing of rear quarter glass (Hardtop)

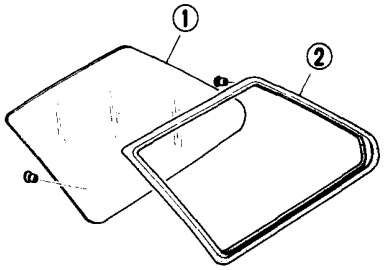

1 Glass
2 Weatherstrip

A24-425

Fig. 14-52 Rear quarter glass

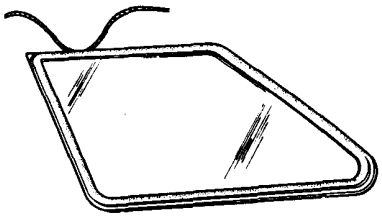

A24-426

Fig. 14-53 Setting work cord

5. Rear Quarter Window on Station Wagon

1) Removal

1) Remove inner trim.
2) Remove rear quarter moulding.
3) Remove rear quarter glass in the same manner as windshield.

2) Installation

Install rear quarter glass in the same manner as windshield.

NOTE:

a. Overlap the ends of work cord at top of rear quarter glass.

b. Apply sealing agent (Cemedine #366E) into groove of weather-strip

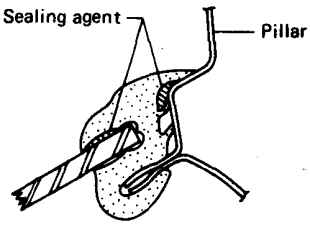

A24-427

Fig. 14-54 Sealing of rear quarter glass

Downloaded from www.Manualslib.com manuals search engine

14-3. Doors

1. Component Parts

• Front

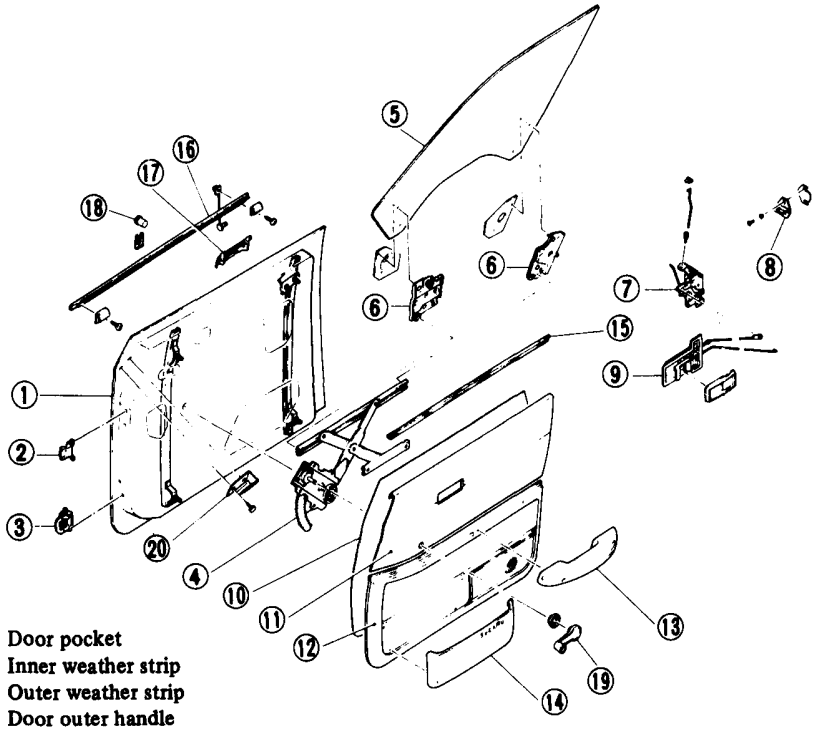

1 Door panel
2 Upper hinge
3 Lower hinge
4 Regulator
5 Door glass
6 Glass holder
7 Door latch
8 Door striker
9 Inner remote assembly
10 Sealing cover
11 Upper trim panel
12 Lower trim panel
13 Arm rest
14 Door pocket
15 Inner weather strip
16 Outer weather strip
17 Door outer handle
18 Key lock
19 Regulator handle
20 Hook

A24-702

Fig. 14-55

• Rear

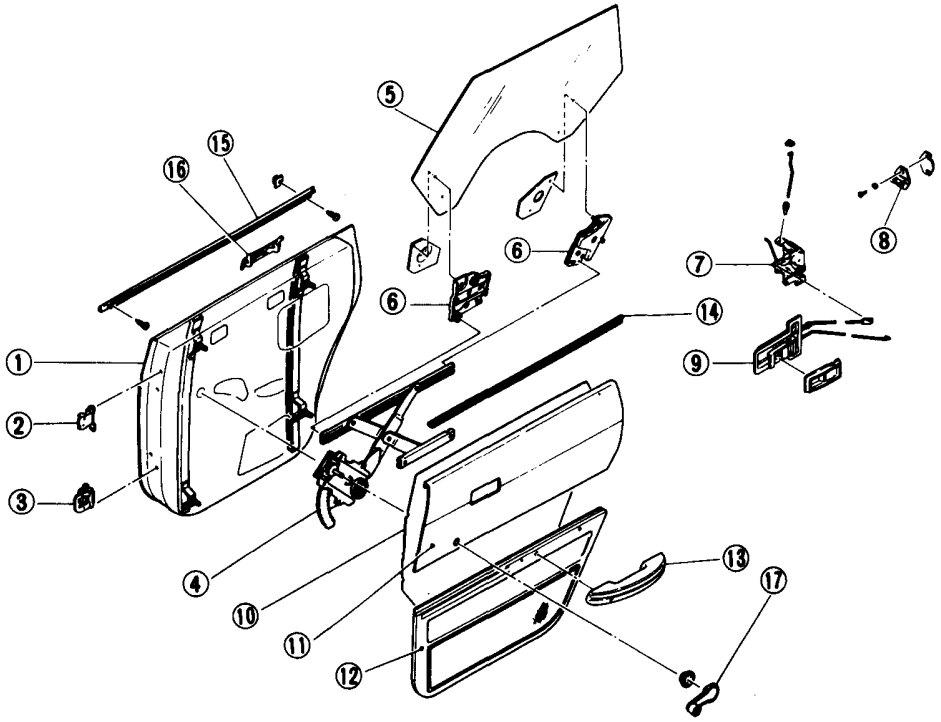

1 Rear door panel
2 Upper hinge
3 Lower hinge
4 Regulator
5 Rear door glass
6 Glass holder
7 Door latch
8 Door striker
9 Inner remote assembly
10 Sealing cover
11 Upper trim panel
12 Lower trim panel
13 Arm rest
14 Inner weather strip
15 Outer weather strip
16 Door outer handle
17 Regulator handle

A24-693

Fig. 14-56

Downloaded from www.Manualslib.com manuals search engine

2. On-car Services

- Outline of Whole Jobs on Door

NOTE:

This chart shows only major procedure for removing and installing the door.
For details refer to the relevant description in this manual.

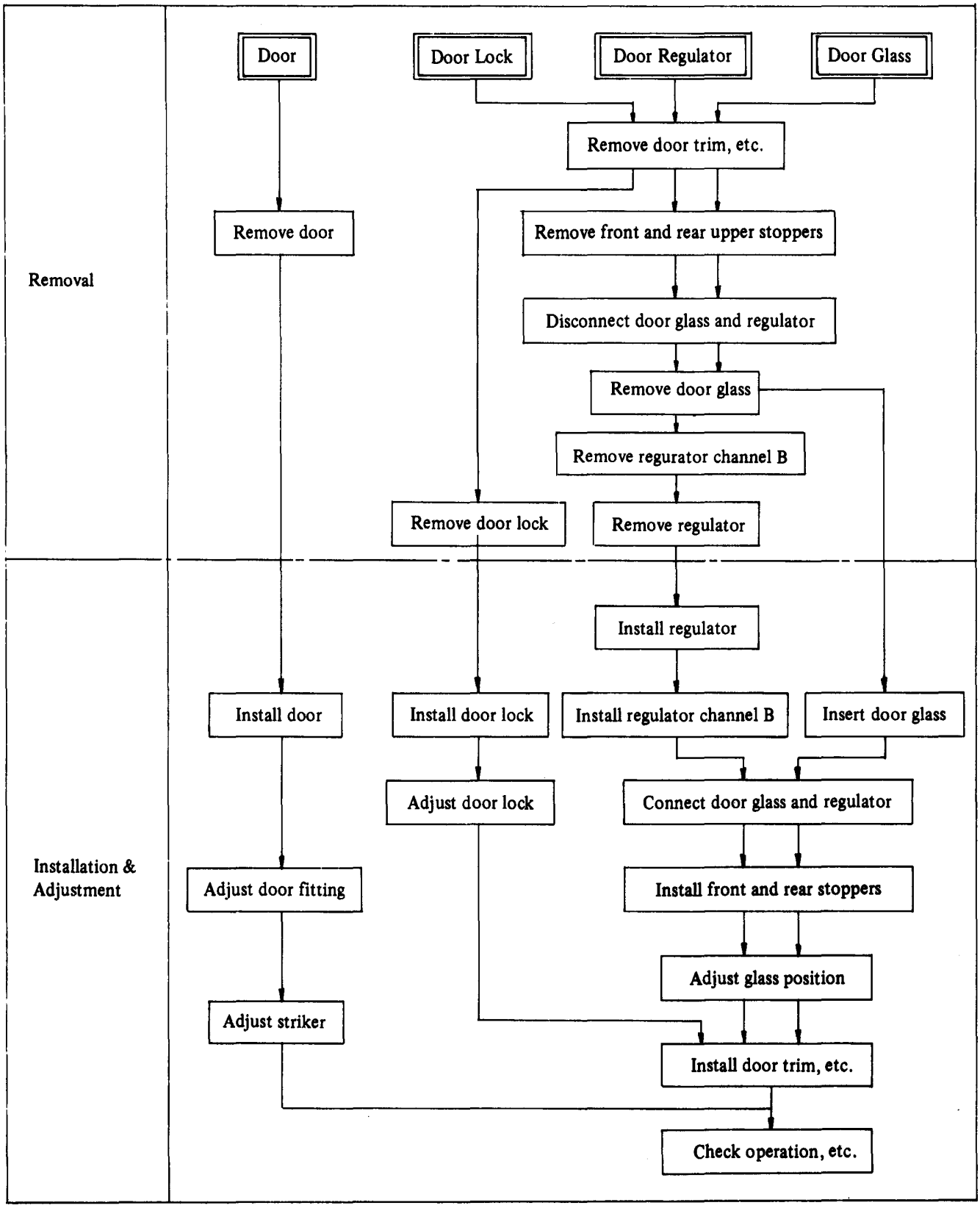

Downloaded from www.Manualslib.com manuals search engine

• Fitting Adjustment

Ⓐ Door is adjusted back and forth and vertically by loosening 8 mm bolts, which fixes the body side of upper and lower hinges, using a special tool (Door hinge wrench 925610000).

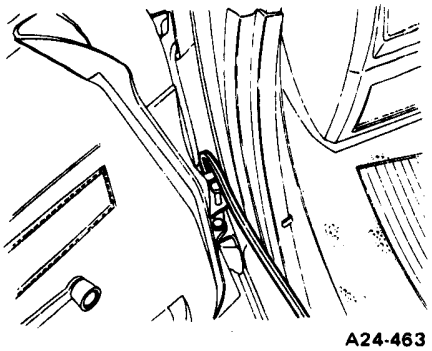

Fig. 14-57 Loosening door hinge bolts on body side

Tightening torque of door hinge bolt	20 – 25 N·m (2.0 – 2.6 kg-m, 14 – 19 ft-lb)

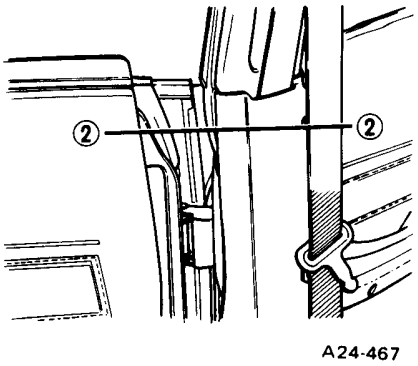

Fig. 14-61 Detail of ② – ②

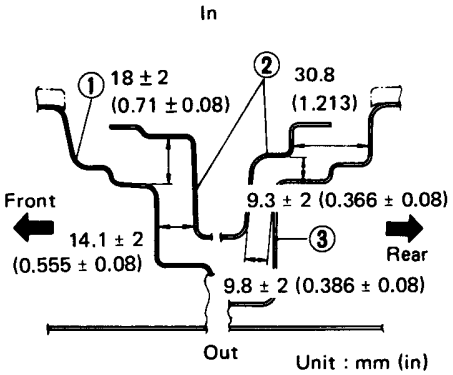

1 Front door panel
2 Center pillar
3 Rear door panel

Fig. 14-62 Cross section of ② – ②

1) 4-Door Sedan & Station Wagon

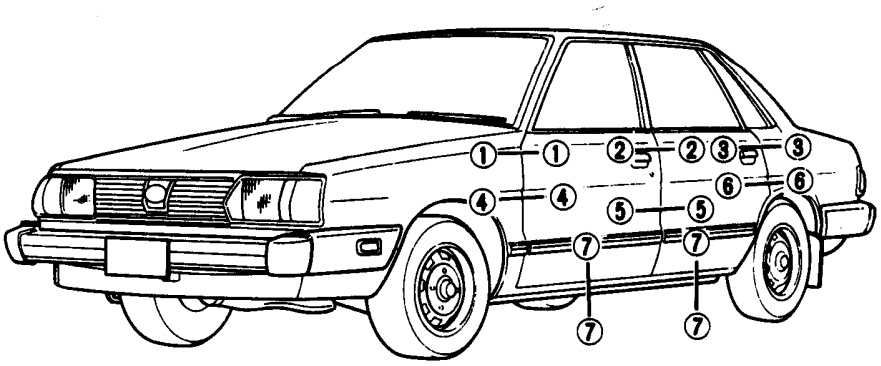

Fig. 14-58 Measuring points for fitting adjustment

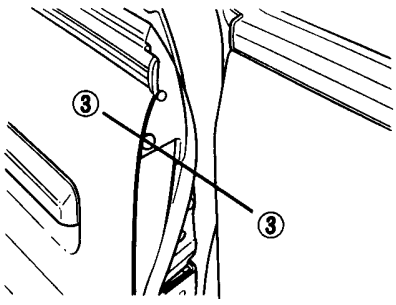

Fig. 14-63 Detail of ③ – ③

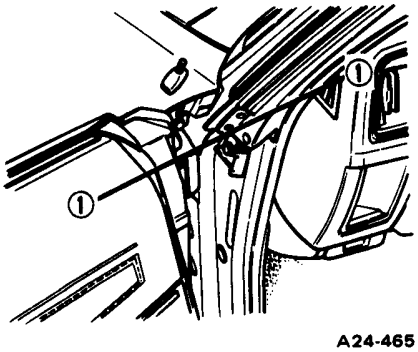

Fig. 14-59 Detail ① – ①

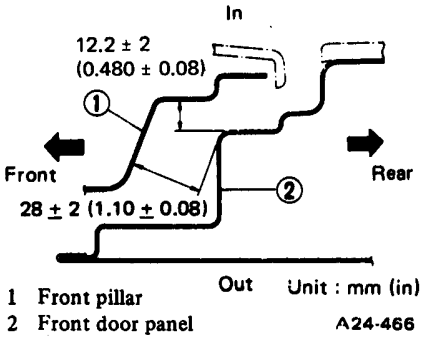

1 Front pillar
2 Front door panel

Fig. 14-60 Cross section ① – ①

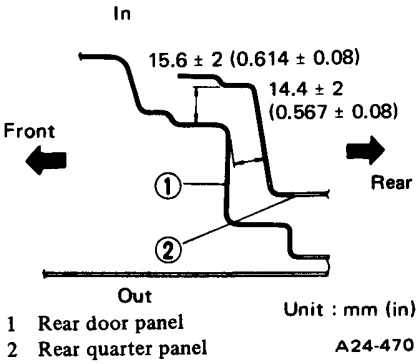

1 Rear door panel
2 Rear quarter panel

Fig. 14-64 Cross section of ③ – ③

Downloaded from www.Manualslib.com manuals search engine

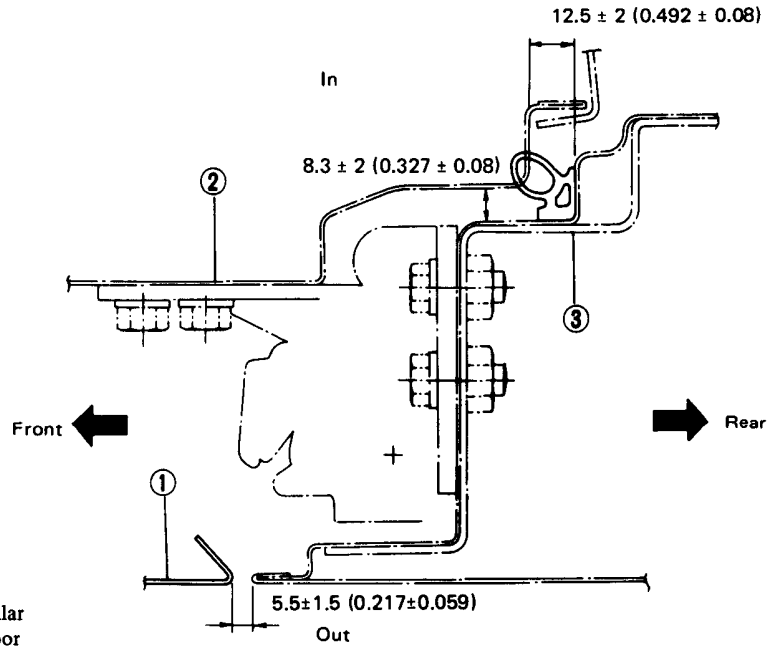

1 Fender
2 Front pillar
3 Front door

Unit : mm (in)
A24-471

Fig. 14-65 Cross section of ④ – ④

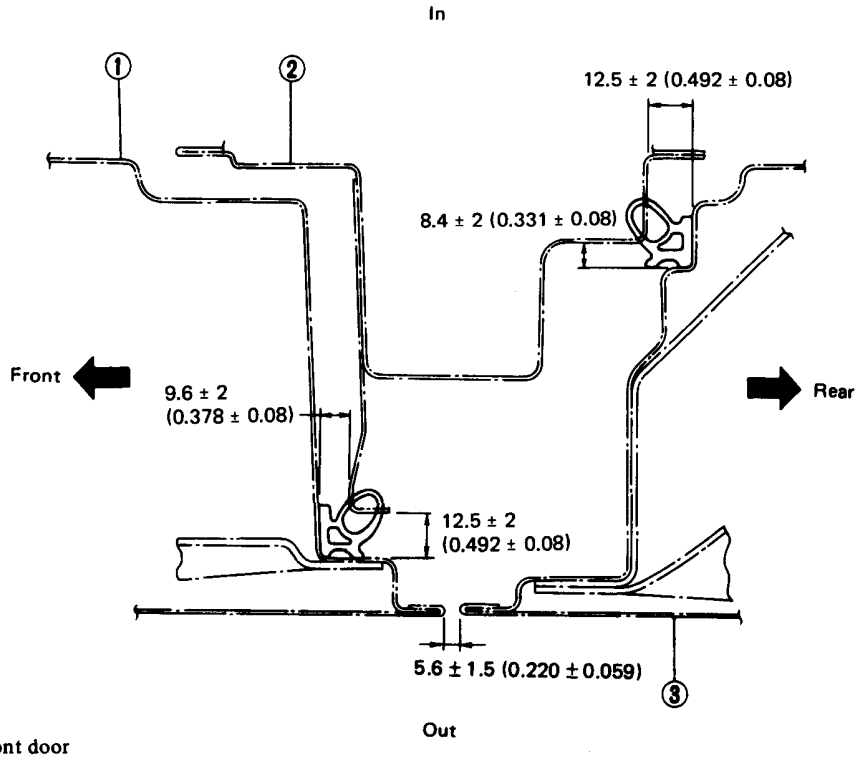

1 Front door
2 Center pillar
3 Rear door

Unit : mm (in)
A24-472

Fig. 14-66 Cross section of ⑤ – ⑤

Downloaded from www.Manualslib.com manuals search engine

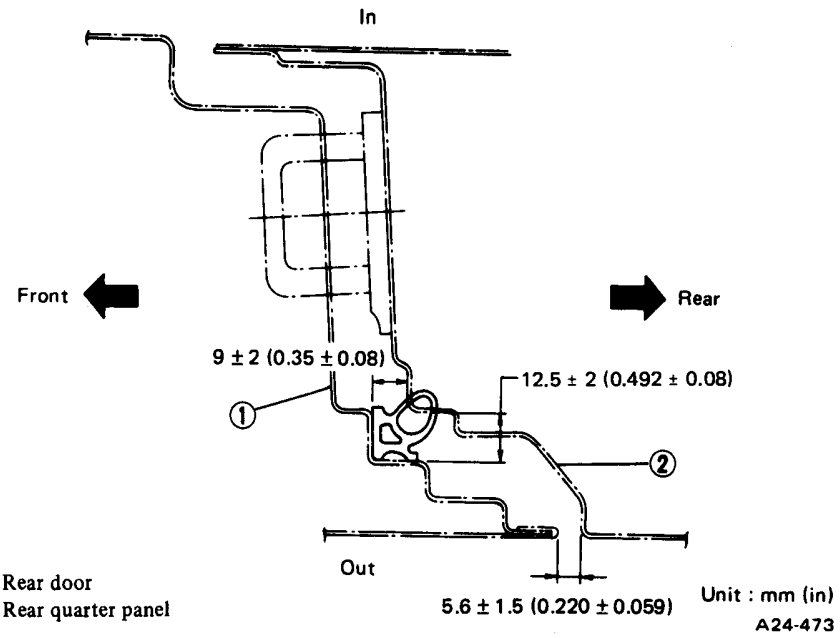

1 Rear door
2 Rear quarter panel

Fig. 14-67 Cross section of ⑥ – ⑥

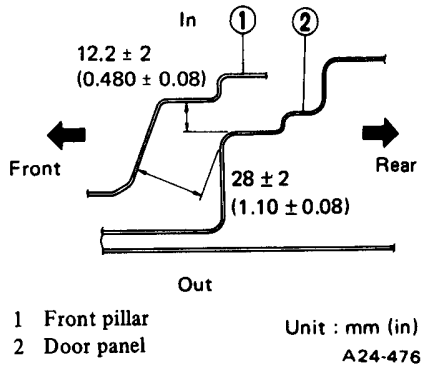

1 Front pillar
2 Door panel

Fig. 14-70 Cross section of ① – ①

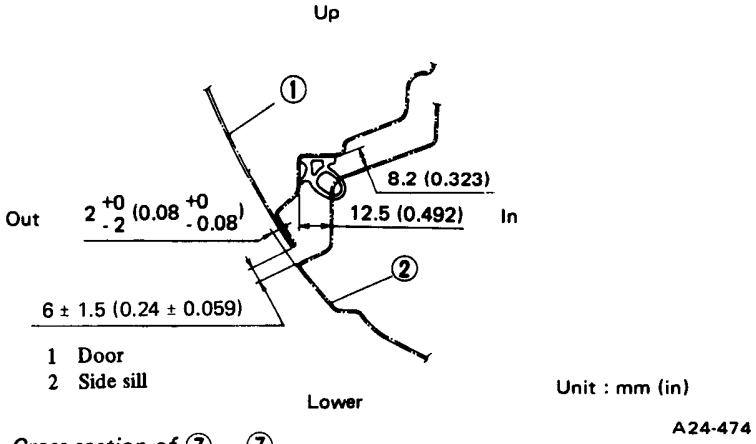

1 Door
2 Side sill

Fig. 14-68 Cross section of ⑦ – ⑦

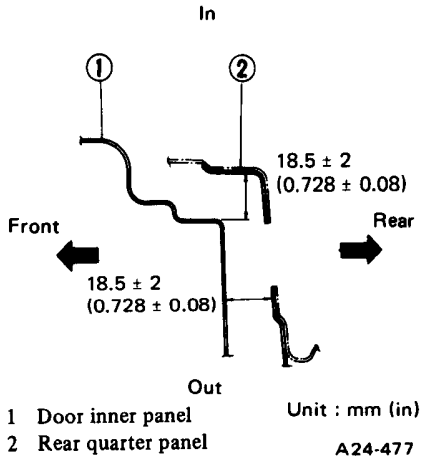

1 Door inner panel
2 Rear quarter panel

Fig. 14-71 Cross section of ② – ②

2) Hatchback, Hardtop and BRAT

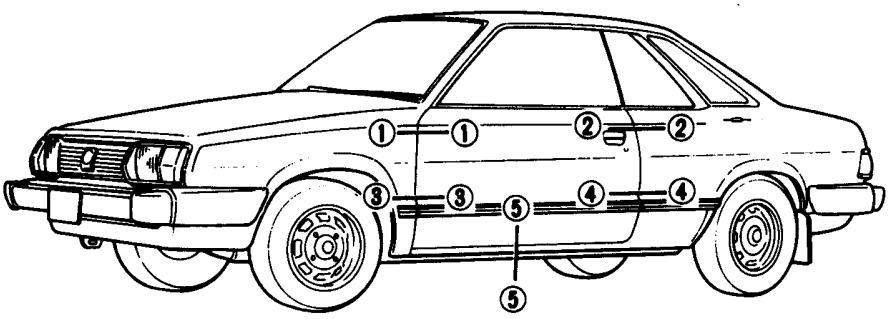

Fig. 14-69 Measuring points for fitting adjustment

NOTE:
To obtain dimensions ①–① and ②–②, measure the distance between sheet metals after removing the corner patches of door and rear quarter panel.

Downloaded from www.Manualslib.com manuals search engine

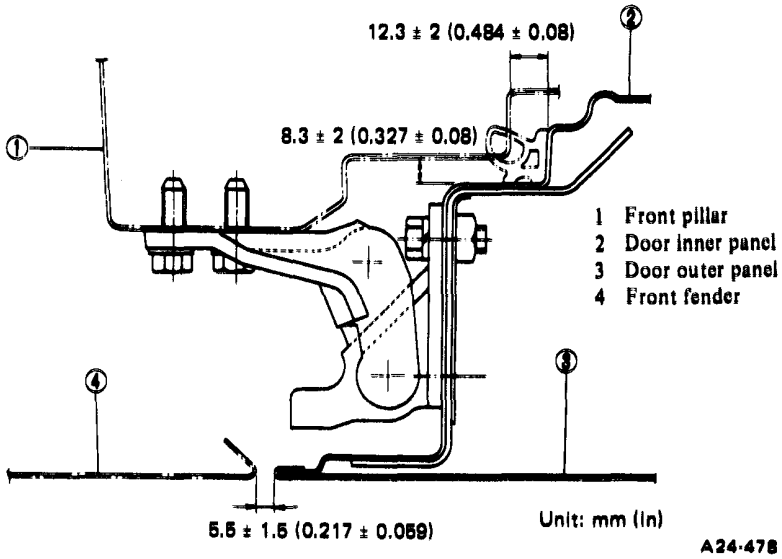

Fig. 14-72 Cross section of ③ – ③

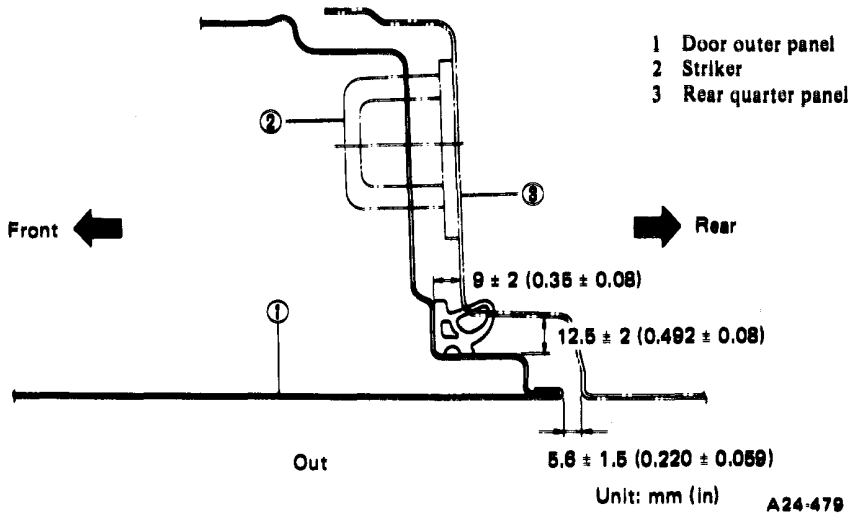

Fig. 14-73 Cross section of ④ – ④

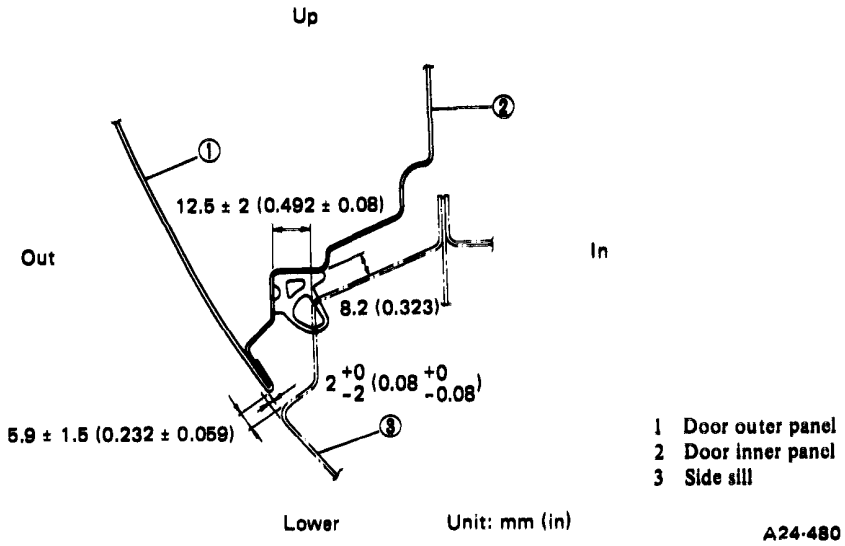

Fig. 14-74 Cross section of ⑤ – ⑤

Ⓑ Door adjusting in opening/closing direction is carried out by loosening the door striker.

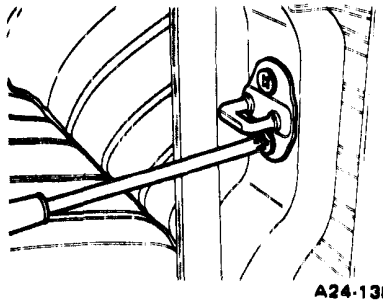

Fig. 14-75 Installing on removing door striker

Torque	10 – 14 N·m (1.0 – 1.4 kg-m, 7 – 10 ft-lb)

NOTE:
Confirm letterings (F: front, R: rear) on strikers to discriminate from each other.

1) If the rear end of door is not fitted properly or door is not closed tight, move striker sideway.

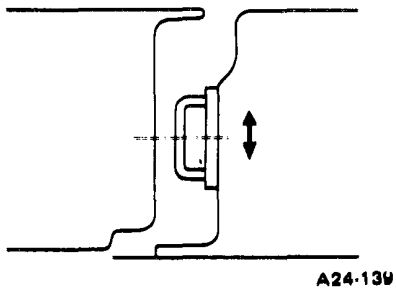

Fig. 14-76 Adjusting striker sideway

2) If striker does not engage correctly with door latch, put a spacer behind the striker.

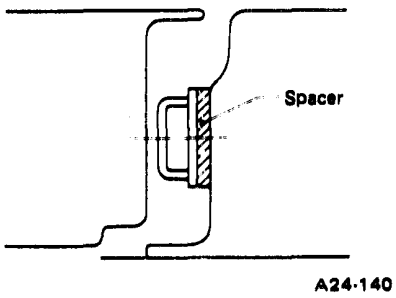

Fig. 14-77 Adjusting striker in backward and forward direction

Downloaded from www.Manualslib.com manuals search engine

• Adjustment of Door Lock Mechanism

No.	Symptom	Possible cause	Measure
1	Door won't be opened by outer handle (but opened by inner handle.)	Play of adjust nut is excessive.	Readjust the play to 0.5 – 1.0 mm (0.020 – 0.039 in)
2	Door won't be opened by inner handle (but opened by outer handle).	a. Connection of rod (upper side) is loose. b. Child lock lever of rear door is shifted to LOCK.	• Tighten securely. • No particular measure is required. (Unlock lever)
3	Door won't be opened by unlocking inner remote (on both inner and outer handles).	a. Not unlocked due to poor adjustment of inner remote position. (Red mark is seen considerably even by locking.) b. Connection of rod (lower side) is loose. c. Unlocking status won't be attained because adjust nut depresses lever See Fig. 14-80.	• Loosen the screw connecting the rod (upper side) and adjust the remote position. (Install with the latch side lever pushed forward and lock lever of inner remote touched with the stopper.) See Fig. 14-79. • Connect it securely with holder similarly to above See Fig. 14-79. • The same as No. 1
4	Door is opened although inner remote is in lock position. (Keyless lock won't operate.)	a. Lock is not applied due to poor adjustment of inner remote.	• The same as No. 3-a See Fig. 14-79.
		b. Connection of rod (lower side) is loose.	• The same as No. 3-b See Fig. 14-79.
5	Child lock lever won't be moved upward.	a. Inner handle does not return completely. b. Poor adjustment of rod (upper side) (It is connected to be pulling connector)	• See No. 6. • Readjust (Connect with child lock lever shifted to LOCK and latch connector depressed) See Fig. 14-79.
6	Inner handle stops halfway.	Rod (upper side) is in close contact with inner remote bracket.	Bend rod (upper side) so as to eliminate contact See Fig. 14-78.

Downloaded from www.Manualslib.com manuals search engine

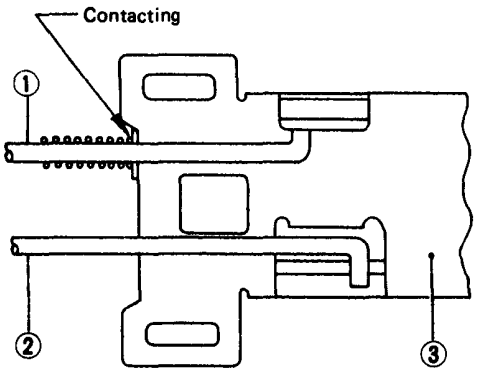

1 Rod (upper side)
2 Rod (lower side)
3 Inner remote bracket

A24-754

Fig. 14-78 Explanation for No. 6

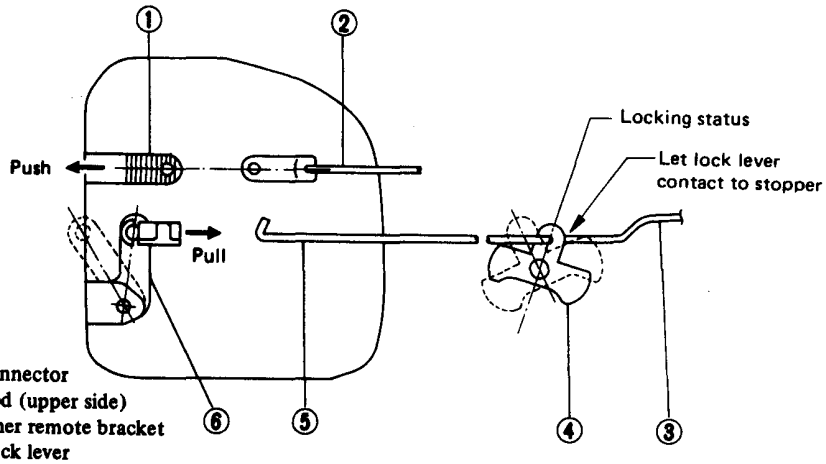

1 Connector
2 Rod (upper side)
3 Inner remote bracket
4 Rock lever
5 Rod (lower side)
6 Latch side lever

A24-755

Fig. 14-79 Explanation for No. 3, 4 & 5

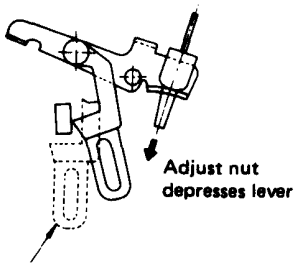

A24-490

Fig. 14-80 Explanation for No. 3-C

- **Adjustment of Door Glass**

1) Preparations for Adjustment

NOTE:
Pay attention to gap and stepping of the door as well as touch to the fender, pillars, rear quarter panel, etc. upon opening/closing the door.

In advance of adjustment, make following preparations with glass closed fully.

a) Loosen bolts of upper stoppers to free them.
b) For 4-Door Sedan and Station Wagon, temporarily set the upper adjust bolt of front sash to the center of elongated hole on the door inner panel.
c) For 2-Door Hatchback and Hardtop, temporarily set the upper adjust bolt of rear sash to the center of elongated hole on the door inner panel.

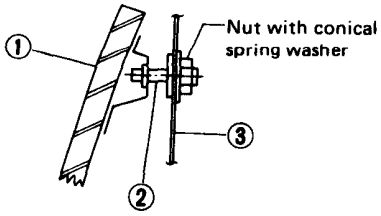

1 Sash
2 Adjust bolt
3 Inner panel

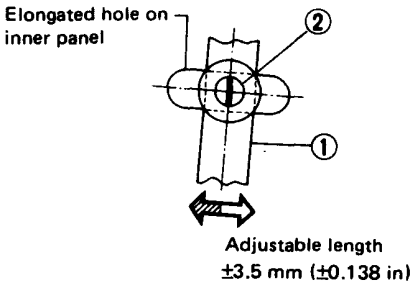

A24-505

Fig. 14-81 Temporarily setting adjust bolt

d) Temporarily fix regulator channel B to the center of elongated holes on door inner panel.

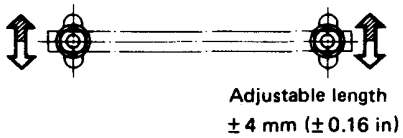

A24-506

Fig. 14-82 Temporarily fixing regulator channel B

e) Remove roof side weatherstrip, and make adjustment without removing the door weatherstrip.

Downloaded from www.Manualslib.com manuals search engine

2) Adjustment

Front door

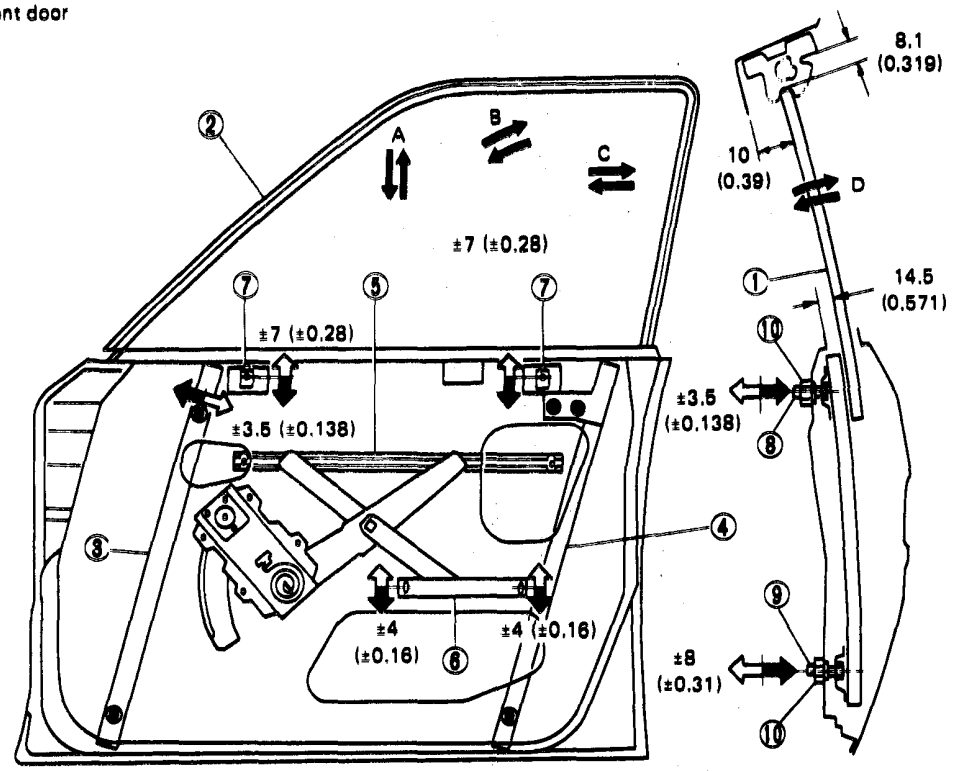

Rear door

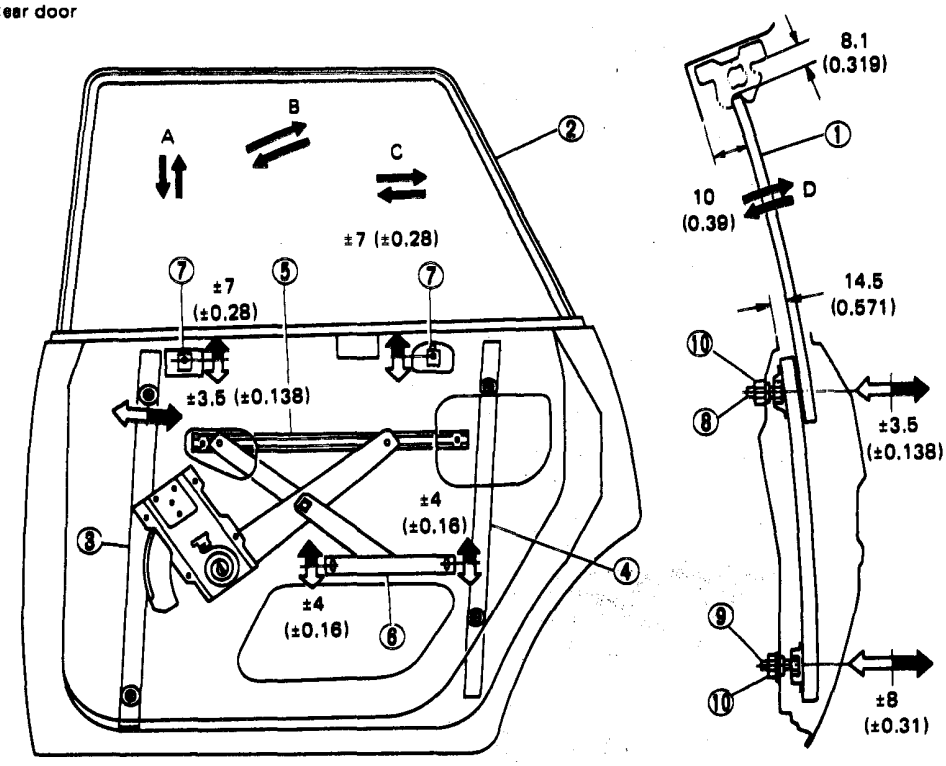

A : Vertical adjustment
B : Inclination adjustment
C : Frontward/backward adjustment
D : Fitting pressure adjustment

1 Glass
2 Retainer
3 Front sash
4 Rear sash
5 Regulator channel A
6 Regulator channel B
7 Upper stoppers
8 Upper adjust bolts
9 Lower adjust bolts
10 Nuts with conical spring washer

Unit: mm (in)

Fig. 14-83 Adjustment of door glass

A24-756

Downloaded from www.Manualslib.com manuals search engine

Ⓐ Vertical adjustment

1) Start adjustment from the roof side with glass raised. It is necessary to depress the glass at its top lightly with hand to eliminate free play.

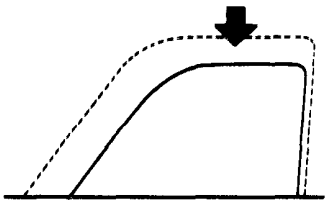

A24-508

Fig. 14-84 Eliminating free play

2) Although there should be uniform clearance between the glass and weatherstrip retainer on roof side from the front to rear, allowable range of the clearance is 8.1 ± 1.0 mm (0.319 ± 0.039 in), provided that the difference between the front and rear must be 1 mm (0.04 in) max.

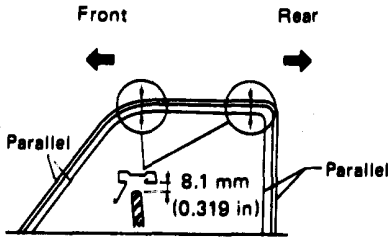

A24-509

Fig. 14-85 Vertical adjustment of door glass

3) Make adjustment by shifting upper stoppers.

Ⓑ Inclination adjustment

This adjustment should be performed while performing Ⓐ adjustment.
1) Move regulator channel B up and down to arrange parallelism of the glass edge with weatherstrip retainers on front and rear pillars as shown following figure. [Adjustable length: ±4 mm (0.16 in).]

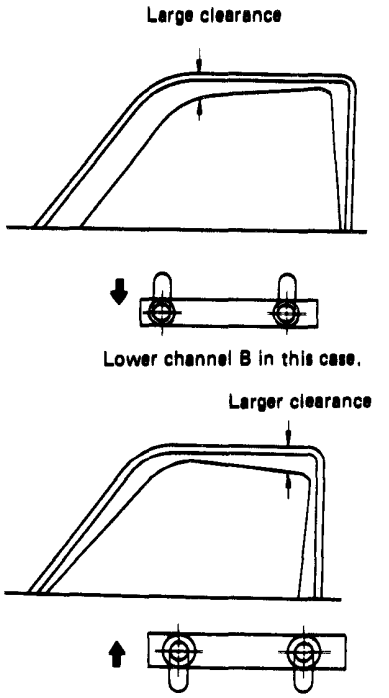

A24-510

Fig. 14-86 Adjusting inclination

Torque	7 – 8 N·m (0.7 – 0.8 kg-m, 5.1 – 5.8 ft-lb)

NOTE:
NOTE:
Be sure to position regulator channel B to be parallel with the line between long holes as shown below.

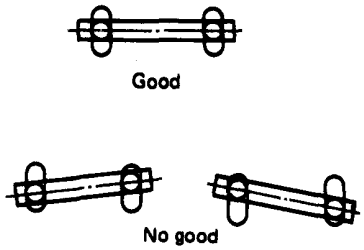

Uneven contact between two upper stoppers may be caused, and glass traces figure S when operated.

A24-511

Fig. 14-87 Shifting channel B

2) After finishing adjustment Ⓐ and Ⓑ, fix upper stoppers.

Torque	7 – 8 N·m (0.7 – 0.8 kg-m, 5.1 – 5.8 ft-lb)

NOTE:
Be sure to fix the upper stoppers in uniform contact with the glass holder. Take into account that the upper stopper tends to be turned upon tightening the bolt.

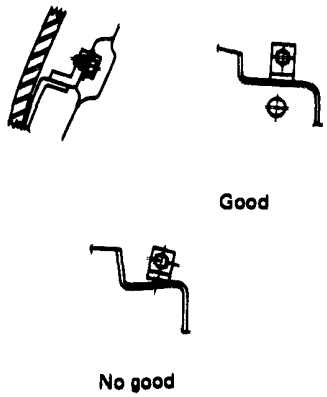

A24-512

Fig. 14-88 Fixing upper stopper

Ⓒ Backward/frontward adjustment

1) Loosen upper nut of front sash for 4-Door Sedan and Station Wagon or of rear sash for 2-Door Hatchback and Hardtop, and shift the glass to the front or rear by slightly pushing it with hand.

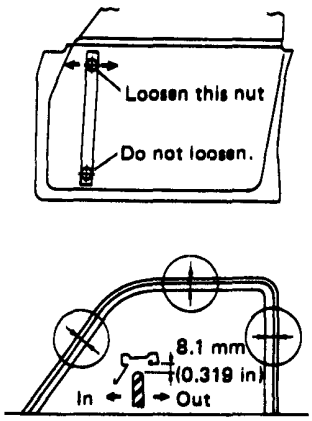

Adjustable length : ± 3.5 mm (± 0.138 in)

A24-513

Fig. 14-89 Adjusting backward/frontward

Torque for nut of sash	10 – 12 N·m (1.0 – 1.2 kg-m, 7 – 9 ft-lb)

Downloaded from www.Manualslib.com manuals search engine

NOTE:

a. Adjust gaps at front and rear edges of the glass should be as equal as possible.

b. If the gaps at the top and bottom of pillar are not aligned, make adjustment by shifting the regulator channel B upward or downward. In this case, confirm the gap at top of glass, and check the upper stoppers for uneven contact.

Ⓓ Fitting pressure adjustment

1) Adjustment at window shoulder

a. Loosen nuts fixing the tops of front and rear sashes, and make adjustment by turning the bolt so as to obtain following clearance against the door inner flange.

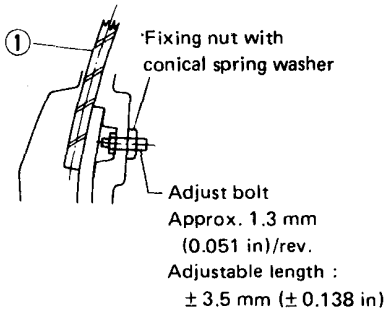

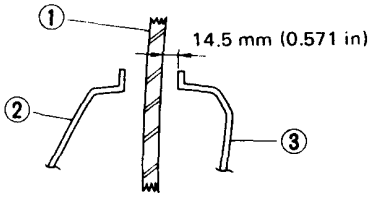

1 Glass
2 Outer panel
3 Inner panel

A24-514

Fig. 14-90 Adjusting fitting pressure at window shoulder

NOTE:

a. Since there is possibility of the gaps at glass side edges being changed due to the shift of sash upon loosening fixing nut of front sash of 4-Door Sedan or Station Wagon and of rear sash of 2-Door Hatchback or Hardtop, it is recommended to mark the original position.

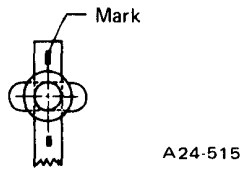

Fig. 14-91 Marking sash position

b. In case of front door for 4-Door Sedan and Station Wagon, turn evenly two upper bolts of rear sash so as to prevent rear sash from inclination.

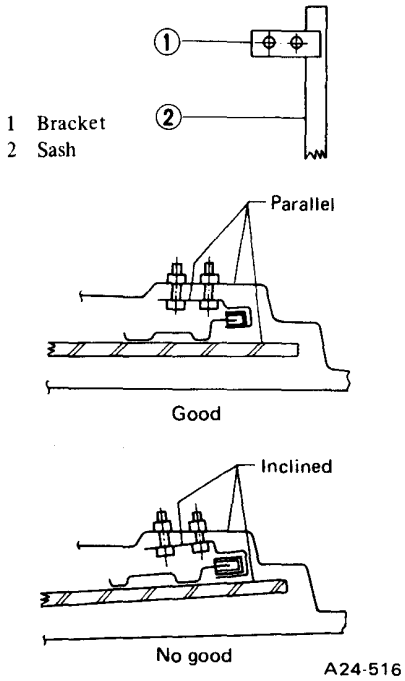

Fig. 14-92 Adjusting sash

Never incline the sash bracket against the inner panel seat, otherwise regulator operating force might be increased significantly.

b. Confirm the relative position of retainer and glass as shown below.

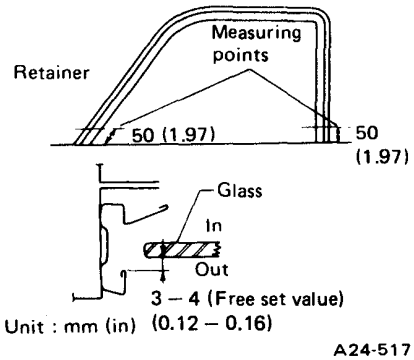

Fig. 14-93 Free set at window shoulder

NOTE:

Never provide free set of 5 mm (0.20 in) or more at the window shoulder. Otherwise, the window shoulder might be pressed excessively and glass top inadequately when mounting roof side weatherstrip.

2) Adjustment at the top of glass

Since free set changes due to reaction force of roof side weather strip, incline the glass to the inside by adjusting the bolt at the bottom of sash until the top of glass comes near the inner flange of retainer.

Max. free set: 11 mm (0.43 in)

NOTE:

a. Never operate the upper adjust bolt in this stage, otherwise regulator operating force might be increased due to incorrect adjustment.

b. The bolts at the bottom of front and rear sashes should be screwed in the same direction and by the same amount.

Adjustable length: ± 8 mm (± 0.31 in)

3) After Adjustment Work

1) Install roof side weatherstrip securely into the retainer, taking special care of the corner.

2) Completely tighten all bolts and nuts that have been tightened temporarily.

4) Check

Check for the followings

1) If the glass won't enter the compartment side over the top of weatherstrip when raising or lowering the glass.

If it enters, the free set at window shoulder is too much. Make adjustment with referring discreption on adjustment Ⓓ.

Downloaded from www.Manualslib.com manuals search engine

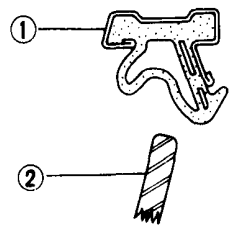

1 Weatherstrip
2 Glass

A24-518

Fig. 14-94 Checking (1)

2) If whole glass edge is covered by the lip of weatherstrip with glass closed all the way.
If not, glass stroke is insufficient.
Make adjustment by shifting upper stoppers.
Refer to adjustment Ⓐ and Ⓑ.

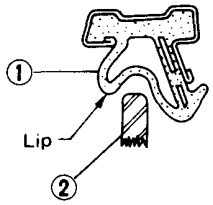

1 Weatherstrip
2 Glass

A24-519

Fig. 14-95 Checking (2)

3) If the gap against the body is proper. (Pay special attention to the center pillar side.)
If not, adjust by shifting bolts of front sash.
Refer to adjustment Ⓒ.
4) If the glass won't be inclined upon fully closed.
If it inclines, the upper stoppers are in uneven contact.
Make adjustment so as to obtain even contact.
Refer to adjustment Ⓐ and Ⓑ.
5) If the glass is moved properly.
If it moves in letter "S", make adjustment by shifting regulator channel B up or down.

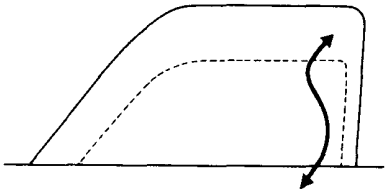

A24-520

Fig. 14-96 Checking (5)

NOTE:
If regulator channel B is adjusted, upper stoppers should be readjusted, because even contact of upper stoppers might be canceled.
Refer to adjustment Ⓑ.

6) If gap is provided between glass and roof side weatherstrip upon depressing the glass slightly by hand from inside of passenger compartment.
If it is, make adjustment by turning adjust bolts at the bottom of sashes.
Refer to adjustment Ⓓ–2).

NOTE:
Confirm there is not water leakage into passenger compartment by pouring water with a hose or shower.

7) If the glass is moved smoothly by operating regulator handle.
If operating force is too large, ie. more than 34.3 N (3.5 kg, 7.7 lb) when raising, more than 53.9 N (5.5 kg, 12.1 lb) at end of its stroke, possible causes are as follows:
a. There is inclination of the bracket for adjusting top of rear sash.
b. Each bottom of front and rear sashes is not adjusted uniformly.
c. There is an excessive friction between the glass and inner weather strip at top of trim panel.
8) If the glass comes in contact with the retainer of roof side weatherstrip upon closing the door.
If it does, make adjustment with referring to adjustment Ⓐ, Ⓑ or Ⓒ.
9) If the lip of weatherstrip is engaged into inside of the glass upon closing door with glass at its upmost position.
If it is, the glass rises excessively, and make adjustment with referring adjustment Ⓐ.

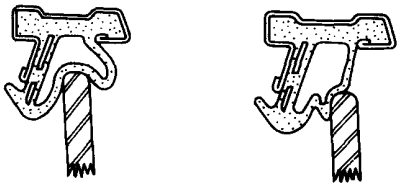

A24-521

Fig. 14-97 Checking (9)

3. Repair for Components

• Door

1) Removal and installation of front door can be carried out by removing/tightening 8 mm bolts of upper and lower hinges on door side with Door Hinge Wrench 925610000.

Torque (8 mm bolt)	20 – 25 N·m (2.0 – 2.6 kg-m, 14 – 19 ft-lb)

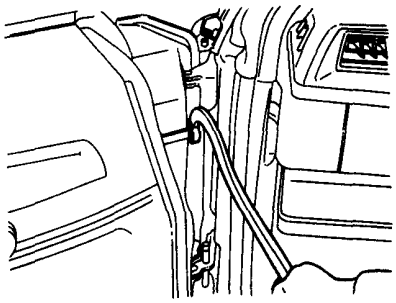

A24-461

Fig. 14-98

2) With front door open, rear door can be removed/installed in the same manner as front door.
3) When removing/installing door, jack up the door with rag or wood block placed at the bottom of door.

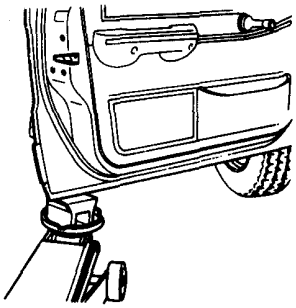

A24-462

Fig. 14-99

4) Apply grease to the moving point of door hinge.
5) Fill inside of grease cap with grease.

Downloaded from www.Manualslib.com manuals search engine

• Inner Remote ASSY

1) Detach trim panel and sealing cover.
2) Disconnect two rods from door latch.

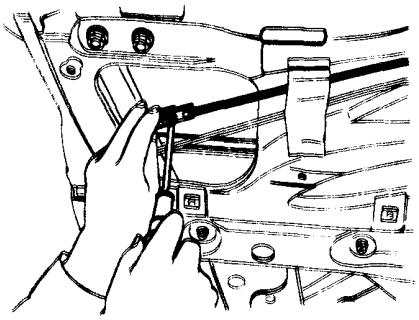

Fig. 14-100 Removing screw

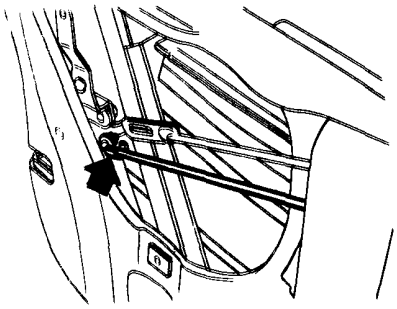

Fig. 14-101 Detaching rod holder

3) Remove inner remote ASSY.

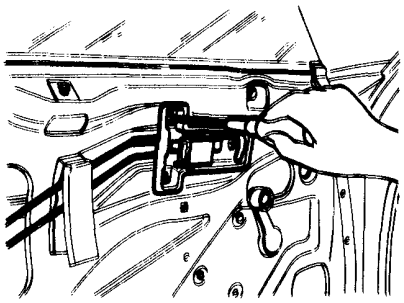

Fig. 14-102

4) Installation can be carried out in the reverse order of removal.

• Door Latch and Key Lock

1) Detach trim panel and sealing cover.
2) Close door glass all the way.
3) Separate remote ASSY from door latch.
4) Disconnect key lock ASSY from door latch rod.

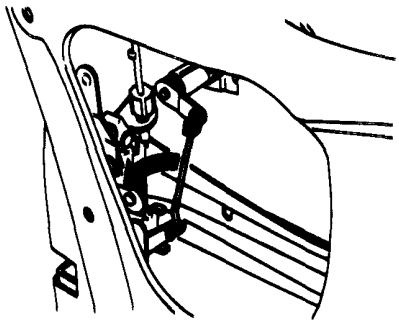

Fig. 14-103 Disconnecting key lock from rod

5) Remove screws, and take out door latch through the lower work hole.

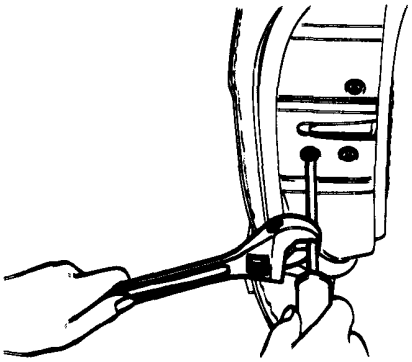

Fig. 14-104 Removing latch

6) Pull out retainer spring, and take out key lock from the outside.

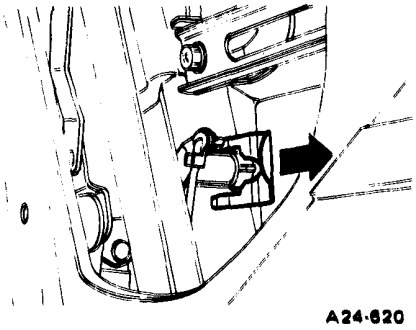

Fig. 14-105 Pulling out retainer spring

7) Installation can be carried out in the reverse order of removal.

Torque Latch installing screws	4 – 6 N·m (0.4 – 0.6 kg·m, 2.9 – 4.3 ft·lb)

NOTE:
a. After installation, make sure that locking mechanism operates properly.
b. Check the following items.
- **Each movement of locking system.**
- **Lubrication to each sliding portion.**

• Outer Handle

1) Remove trim panel and sealing cover.
2) Remove door glass, and disconnect outer handle rod and door latch rod.
3) Detach outer handle from the outside.

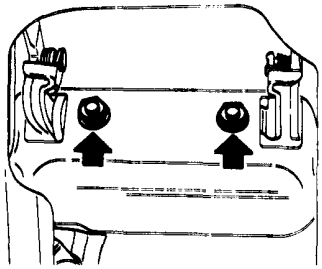

Fig. 14-106

4) Installation can be carried out in the reverse order of removal.

NOTE:
Adjust free play between adjust nut and door latch lever into 0.5 to 1.0 mm (0.020 to 0.039 in).

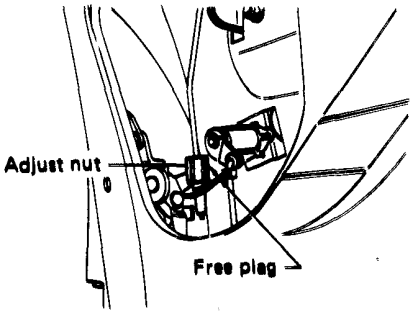

Fig. 14-107 Free play of adjust nut

Downloaded from www.Manualslib.com manuals search engine

• Door Glass

Removing and installing procedures are common to the front and rear door glasses.

1) Detach trim panel and sealing cover.

2) Remove outer weatherstrip.

3) Remove upper stoppers at the front and rear of door by loosening bolts, and detach two bolts fixing glass holder to regulator channel A.

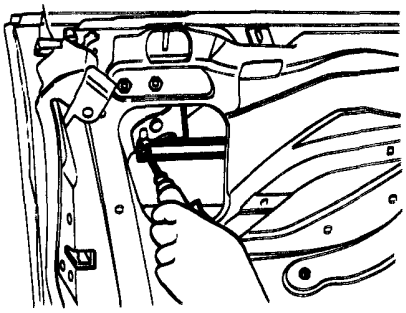

A24-499

Fig. 14-108

NOTE:

a. It is recommended to mark each part before removal to facilitate adjustment.

b. When removing the bolt of regulator channel A, lower the glass until the bolt comes in the service hole.

c. Never turn regulator in closing direction while glass is removed, otherwise the gear might be disengaged.

4) Hold glass by both hands with door opened, and then pull it out upward while pushing it slightly against the front sash side (for 4-Door Sedan and Station Wagon) or the rear sash side (for 2-Door Hatchback and Hardtop).

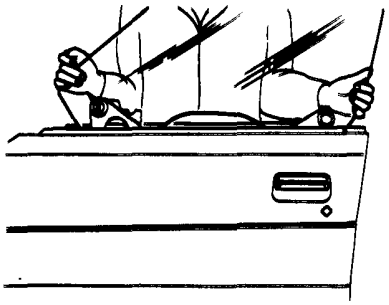

A24-500

Fig. 14-109

5) Installation can be carried out in the reverse order of removal.

Tightening torque for regulator channel A fixing screws	7 – 8 N·m (0.7 – 0.8 kg-m, 5.1 – 5.8 ft-lb)

NOTE:

Place the claw of glass holder securely on the regulator channel A.

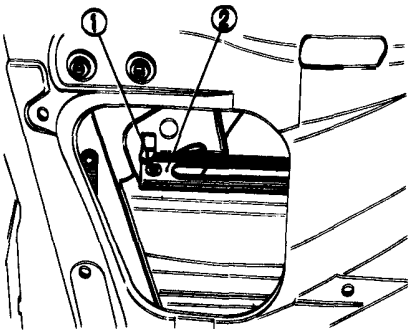

1 Claw
2 Regulator channel A

A24-501

Fig. 14-10 Placing claw onto regulator channel A

• Door Glass Regulator and Sash

Although following description is based on front window regulator, removal and installation of rear window regulator can be carried out in the same manner as that for the front window regulator.

1) Removal

1) Detach trim panel and sealing cover.

2) Remove outer weatherstrip and end of door weatherstrip, and then take out door glass.

3) Remove four bolts fixing regulator base plate and two bolts fixing regulator channel B.

4) Take out regulator ASSY through the lower work hole of door panel.

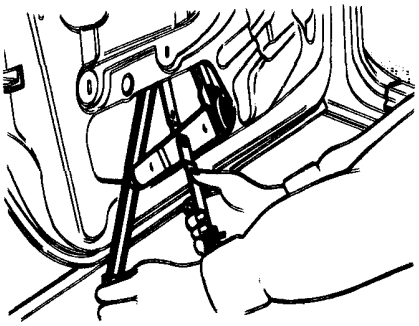

A24-502

Fig. 14-111 Removing regulator

5) Remove all nuts, and take out sash through the opening for the glass.

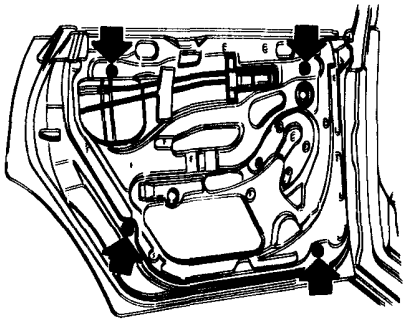

A24-504

Fig. 14-112

2) Inspection

Check regulator for following items, and replace with new one or repair it if defective.

a. Gear for excessive wear

b. Spring for breakage

c. Other component parts for damage or abnormal wear

d. Each sliding portion for proper lubrication

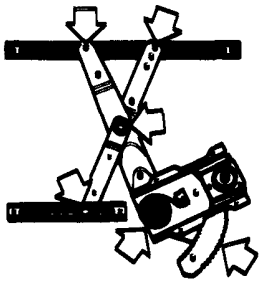

A24-503

Fig. 14-113 Window regulator

Downloaded from www.Manualslib.com manuals search engine

NOTE:
Apply grease to the location indicated by arrows in the above figure.

3) Installation

Reverse the steps in removal.

Torque	
Regulator mounting bolts	7 – 8 N·m (0.7 – 0.8 kg-m, 5.1 – 5.8 ft-lb)
Sash fixing nuts	10 – 12 N·m (1.0 – 1.2 kg-m, 7 – 9 ft-lb)

NOTE:
a. When mounting regulator to door panel, first tighten four bolts of base plate and then tighten two bolts for regulator channel B while making proper adjustment.
b. In case of front door, for 4-Door Sedan and Station Wagon front sash has [ ] shaped section and rear sash has [shaped section, and vice versa for 2-Door Hatchback and Hardtop.

4. Power Window (Option)

Switches for power window are provided on doors (except front passenger side door) instead of window regulator handles, and window regulator of each door has a electric motor. Removal, installation and adjustment procedures are common to the door with (manual) window regulator.

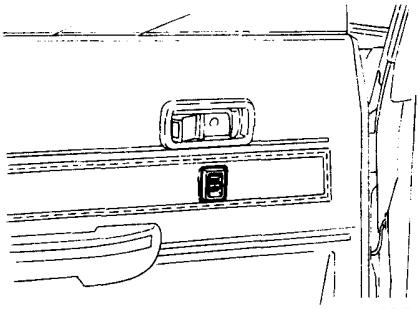
A24-695

Fig. 14-114 Switch for power window

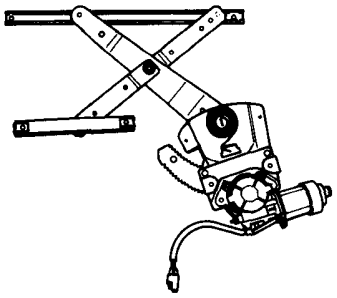
A24-696

Fig. 14-115 Window regulator for power window

NOTE:
a. When removing trim panel, disconnect electric wires at connectors.

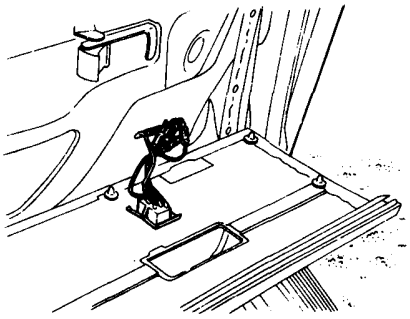
A24-697

Fig. 14-116 Electric wires and connectors

b. When taking out window regulator, also disconnect electric wire at connector.

Downloaded from www.Manualslib.com manuals search engine

14-4. Rear Gate

1. Rear Gate on Hatchback and Station Wagon

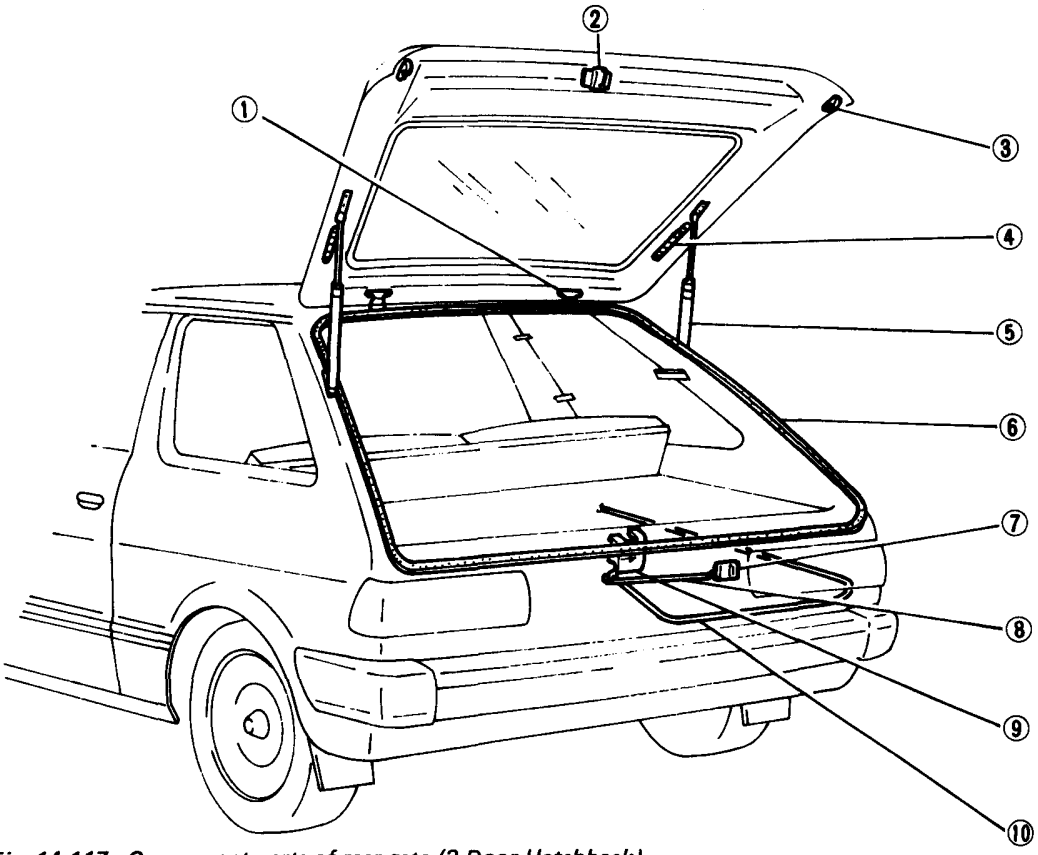

1 Hinge
2 Striker
3 Stopper
4 Air-vent grille
5 Gas stay
6 Weatherstrip
7 Key cylinder
8 Rod
9 Latch
10 Rear gate opener cable

A24-522

Fig. 14-117 Component parts of rear gate (2-Door Hatchback)

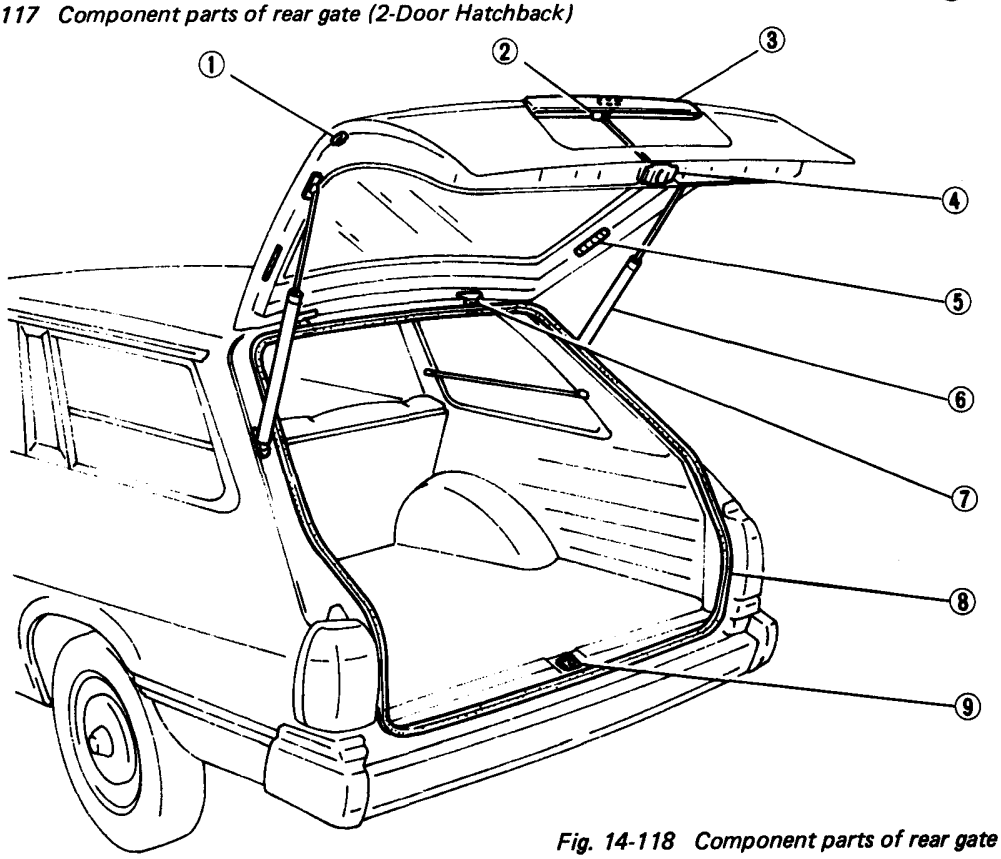

1 Stopper
2 Key cylinder
3 Outer handle
4 Latch
5 Air-vent grille
6 Gas stay
7 Hinge
8 Weatherstrip
9 Striker

A24-523

Fig. 14-118 Component parts of rear gate (Station Wagon)

Downloaded from www.Manualslib.com manuals search engine

• Fitting Adjustment

1) Remove gas stays and striker, loosen bolts fixing rear gate hinge to the body, and then adjust the gaps into the dimensions shown in following figures by shifting the door.

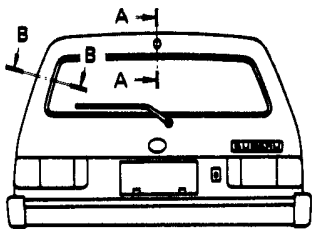

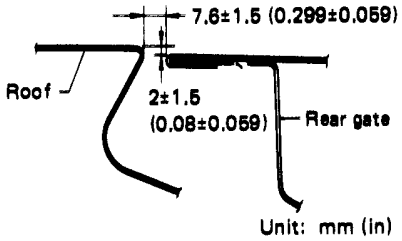

Section A-A

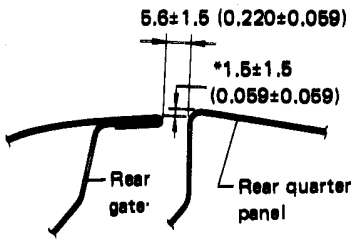

Section B-B

Unit: mm (in)

* Marked dimension should be equal at both sides.

A24-529

Fig. 14-119 Adjusting gaps (2-Door Hatchback)

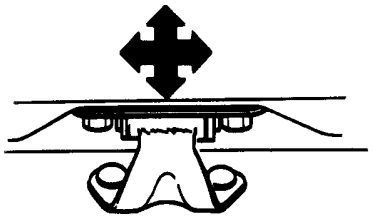

A24-530

Fig. 14-120 Adjusting hinge position (2-Door Hatchback)

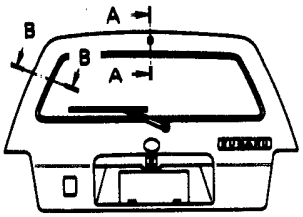

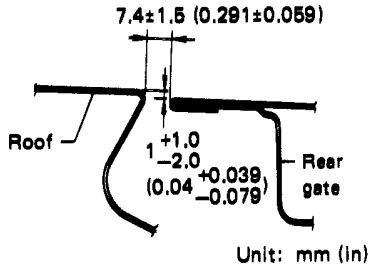

Section A-A

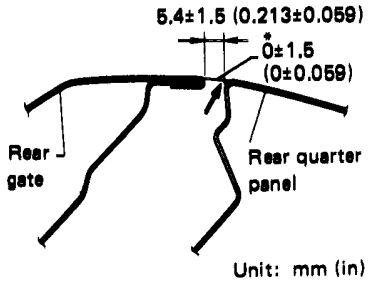

Section B-B

* Marked dimension should be equal at both sides.

A24-531

Fig. 14-121 Adjusting gaps (Station Wagon)

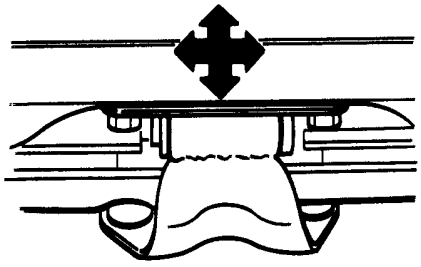

A24-532

Fig. 14-122 Adjusting hinge position (Station Wagon)

2) Adjust striker as follows

a. To make sidewise and longitudinal adjustments of striker, loosen fixing bolts and shift the striker.

NOTE:

a. Make sidewise adjustment with special attention so as to align the centers of striker and latch. With the striker fixed temporarily, engage it with the latch, and it will shift to aligned position.

b. Make longitudinal adjustment so as to provide proper gaps to the body and to provide proper fitting pressure of weather strip.
In case of Station Wagon, this adjustment should be made with key lock locked.

b. Make vertical adjustment by placing spacer on fixing surface of the striker so as to provide specified dimensions as shown in the following figures with * marked.

2-Door Hatchback

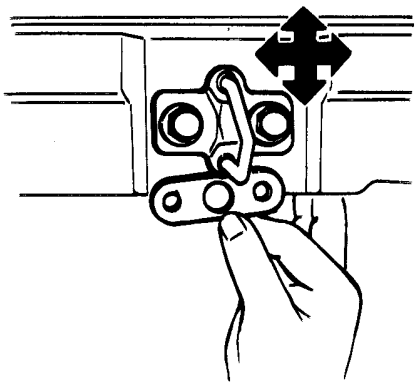

A24-533

Station Wagon Spacer

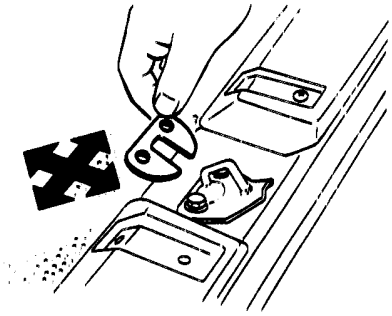

A24-699

Fig. 14-123 Placing spacer

Downloaded from www.Manualslib.com manuals search engine

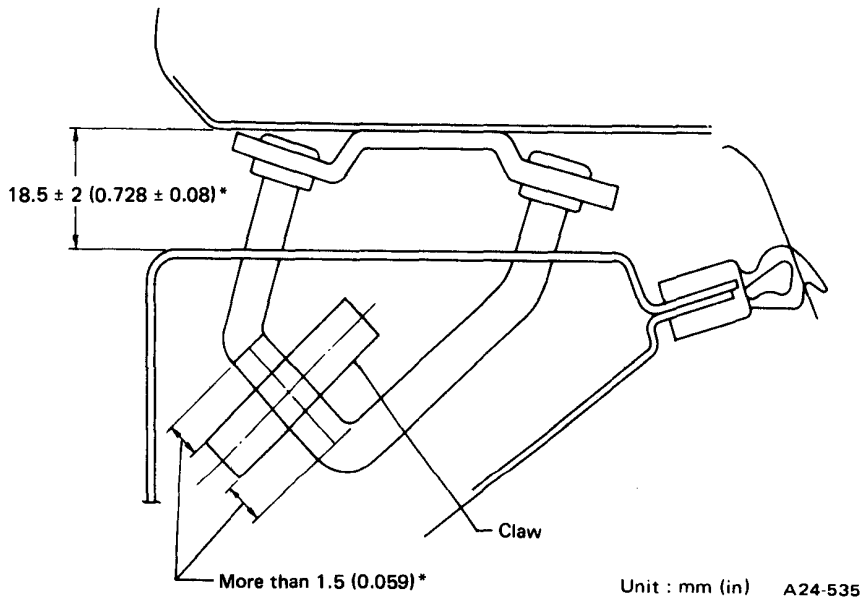

Fig. 14-124 Vertical adjustment (2-Door Hatchback)

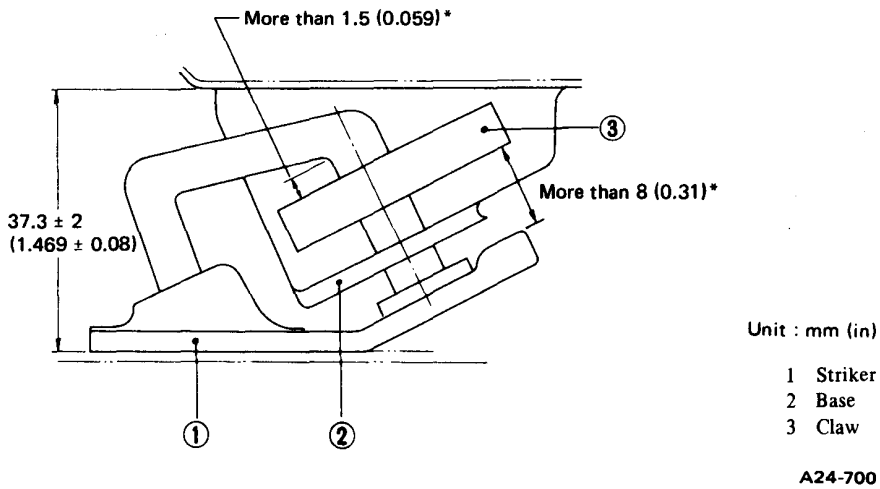

Fig. 14-125 Vertical adjustment (Station Wagon)

NOTE:
If * marked dimension can not be provided by placing spacer, make adjustment by shifting rear gate with hinge bolt loosened.

3) Confirm that rear gate operates properly after adjustment.

• Removal and Installation

Precautions:

- **Carefully protect the body coating, glass, etc. from scratches by placing waste cloth or the like.**
- **Handle the trim panel, etc. with utmost care so as to prevent them from damage.**
- **Have two or more persons move large-size parts.**
- **Exercise utmost care of handling small-size parts so as to prevent them from being damaged.**

1) Remove clips by using Puller 925580000, and then detach trim panel.
2) Disconnect electric connectors and hose.
a. Electric connectors for rear defogger
b. Electric connector for rear wiper
c. Rear washer hose
d. (Station Wagon) Electric connector for license lights
3) Dismount gas stay as follows:
a. Open rear gate all the way.
b. Remove bolt on rear gate side.

NOTE:
Let the other person support rear gate since it will fall upon removing gas stay.

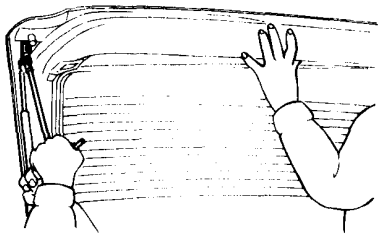

Fig. 14-126 Removing gas stay

c. Remove bolt on body side, and then detach gas stay.

NOTE:
a. Never detach gas stays on both sides at the same time.
b. Between body and rear gate on each side, place a folded waste cloth having a considerable thickness in order to protect body and rear gate from damage after removing gas stays.

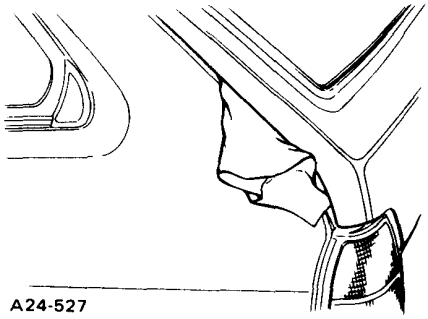

Fig. 14-127 Placing a waste cloth

4) Remove side rail trim, and remove clips of roof trim as far as center pillar.
5) Let roof trim hang down (preventing it from being folded), and remove hinges on both sides.

Downloaded from www.Manualslib.com manuals search engine

NOTE:

Carry out removal with extreme care to protect body and rear gate coating from scratches by placing a folded waste cloth of considerable thickness between body and rear gate.

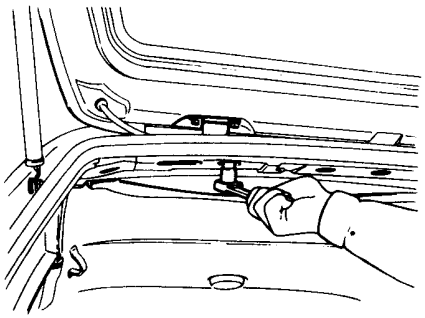

A24-528

Fig. 14-128 Removing hinge

6) Detach rear gate ASSY from vehicle body carefully.

7) Installation can be carried out in the reverse order of removal while making fitting adjustment.

Torque	
Hinge fixing bolt (Gate side)	18 – 23 N·m (1.8 – 2.3 kg-m, 13 – 17 ft-lb)
Hinge fixing bolt (Body side)	25 – 29 N·m (2.5 – 3.0 kg-m, 18 – 22 ft-lb)
Gas stay set bolt	6 – 9 N·m (0.6 – 0.9 kg-m, 4.3 – 6.5 ft-lb)
Striker set bolt	22 – 25 N·m (2.2 – 2.6 kg-m, 16 – 19 ft-lb)

(Station Wagon only)

Latch set bolt	22 – 25 N·m (2.2 – 2.6 kg-m, 16 – 19 ft-lb)
Outer handle set bolt & nut	7 – 10 N·m (0.7 – 1.0 kg-m, 5.1 – 7.2 ft-lb)
Key cylinder set screw	5 – 6 N·m (0.5 – 0.6 kg-m, 3.6 – 4.3 ft-lb)

(Hatchback only)

Latch set screw	6 – 8 N·m (0.6 – 0.8 kg-m, 4.3 – 5.8 ft-lb)

• Gas Stay

1) Never disassemble the gas stay since the cylinder part is filled with high pressure gas.

2) If exchanging the gas stay assembly, fix the entire structure obliquely with the body side of the cylinder raised slightly, and bore an opening of 2 to 3 mm (0.08 to 0.12 in) dia. in the cylinder body, thereby completely discharging high pressure gas.

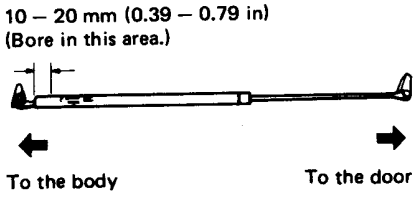

A24-537

Fig. 14-129 Gas stay

NOTE:

a. Although the gas has no color, odor nor toxicity, pay special attention while the gas is being discharged since metal chips due to drilling may be blown through the opening.

b. It is recommended to cut out the bore with the cylinder body covered with a vinyl sack since oil, etc. may splash over through the bore upon drilling.
(Carefully prevent the vinyl sack from being rolled round the drill tip.)

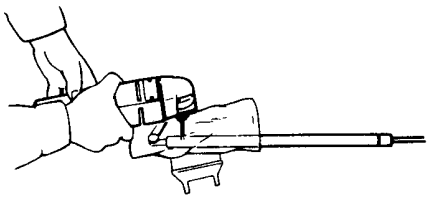

A24-538

Fig. 14-130 Drilling gas stay

3) Handle each part with utmost care. Never scratch the exposed portion of piston rod nor apply paint or oil to it.

4) Do not turn the piston rod and/or the cylinder with the gas stay fully extended.

NOTE:

a. If the packing in the gas stay is damaged, be sure to replace it with new one.

b. Never allow the bolts to damage the threaded portions of the nuts for fixing the body and rear gate sides of the gas stay.

c. Confirm the nameplate on the gas stay to be installed since there are two kinds of gas stays.
White marked one :
for rear gate with rear wiper
No marked one :
for rear gate without rear wiper

Downloaded from www.Manualslib.com manuals search engine

2. Rear Gate on BRAT

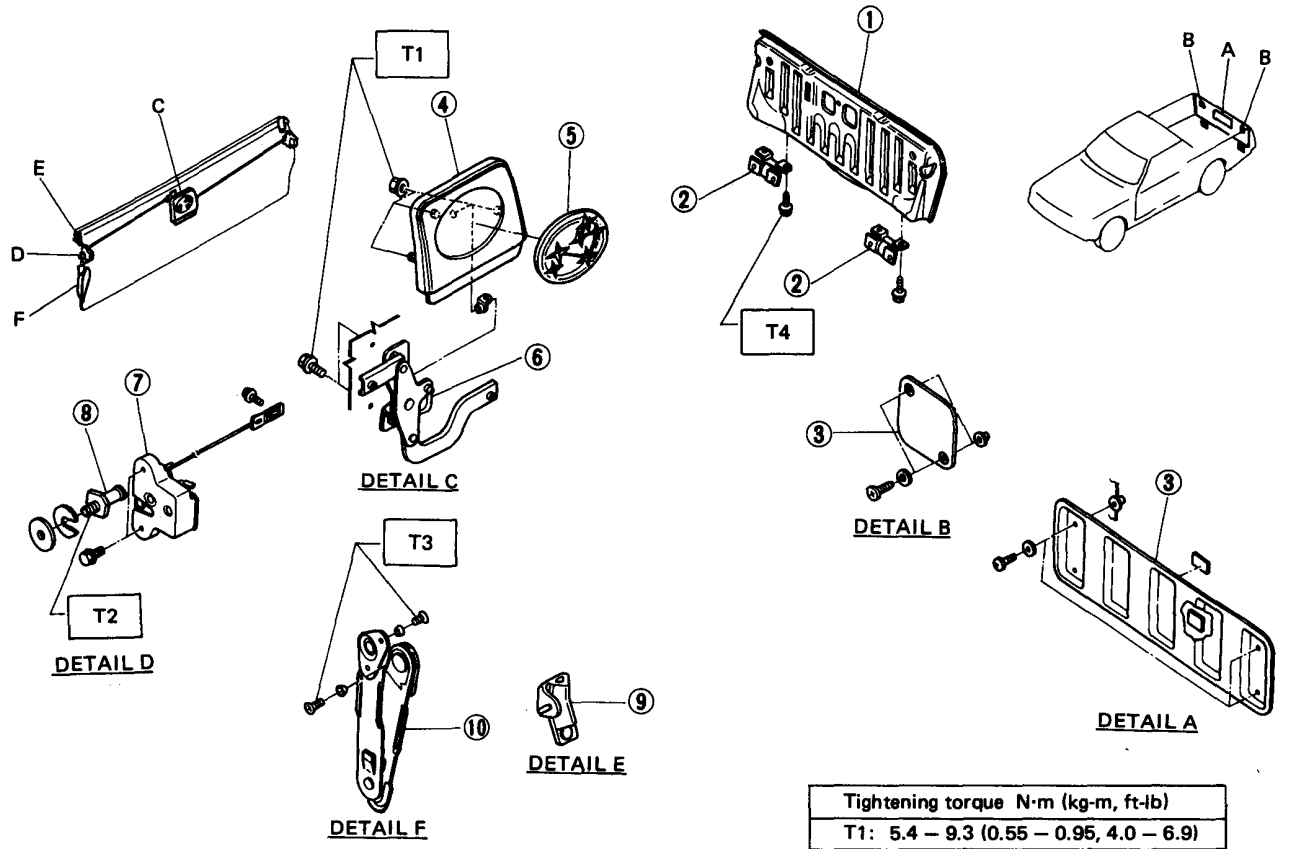

Tightening torque N·m (kg-m, ft-lb)
T1: 5.4 – 9.3 (0.55 – 0.95, 4.0 – 6.9)
T2: 32 – 42 (3.3 – 4.3, 24 – 31)
T3: 4 – 5 (0.4 – 0.5, 2.9 – 3.6)
T4: 13 – 23 (1.3 – 2.3, 9 – 17)

1 Rear gate panel ASSY
2 Hinge
3 Cover
4 Rear gate handle
5 Ornament
6 Lever
7 Latch
8 Striker
9 Buffer
10 Stay

Fig. 14-131

• Fitting Adjustment

1) Adjust the clearance between rear gate and rear quarter panel, as well as the alignment between the two, until the specified ranges are obtained, as indicated in the figure below.

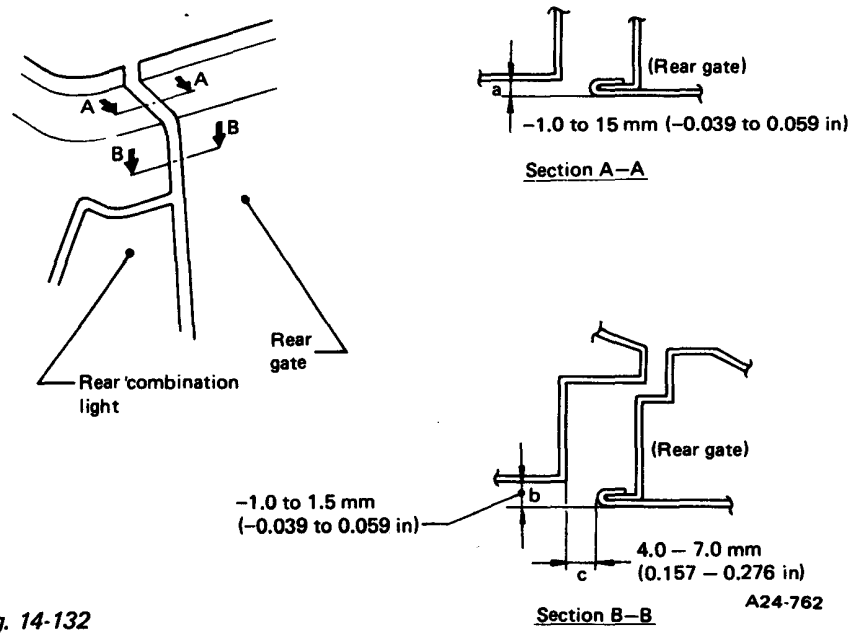

Fig. 14-132

Downloaded from www.Manualslib.com manuals search engine

To properly make the in-and-out and alignment adjustments, proceed as follows:

① Up-and-down adjustment (shown by "a" in the figure above)
Move the rear skirt end of hinge up or down.

② Fore-and-aft adjustment (shown by "b")
Move the rear gate side of hinge forward or backward.

③ Left-and-right adjustment (shown by "c")
Move the rear gate end of hinge left or right.

Torque (Bolts of hinges)	13 – 23 N·m (1.3 – 2.3 kg-m, 9 – 17 ft-lb)

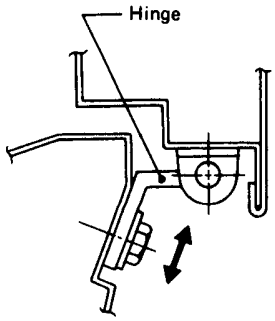

A24-763

Fig. 14-133 Up-and-down adjustment

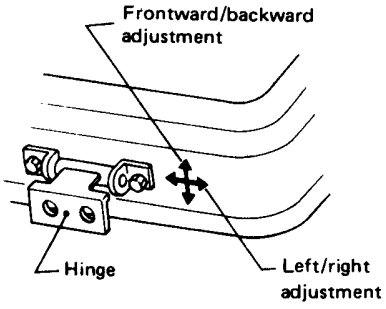

A24-764

Fig. 14-134 Fore-and-aft and left-and-right adjustments

NOTE:
After hinge has been properly positioned, use touch-up paint where necessary.

2) Carefully close rear gate until striker contacts latch, then check and adjust striker as follows:

a. Check striker to see if it is positioned in the center of the notch in latch. If not, move striker up or down until correct adjustment is made.

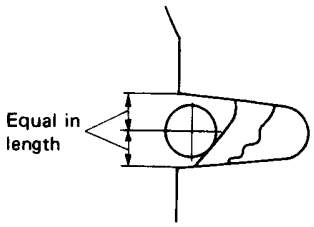

A24-759

Fig. 14-135

b. Add or remove spacer(s) until the lateral clearance between striker's flange and claw is within the specified range as indicated in the figure below.

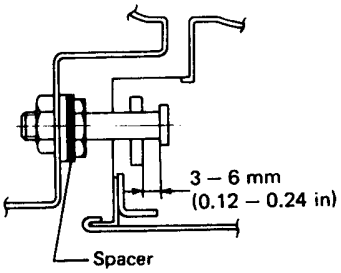

A24-760

Fig. 14-136

Torque (Striker)	32 – 42 N·m (3.3 – 4.3 kg-m, 24 – 31 ft-lb)

• Latch

1) Replacement

1) Detach covers of rear gate.
2) Remove screws connecting rods to levers.
3) Remove latch along with rod by removing 2 bolts.
4) Install (new) latch.

Torque	5.4 – 9.3 N·m (0.55 – 0.95 kg-m, 4. 0 – 6.9 ft-lb)

5) Connect rods to levers with screws according to next "Adjustment".

Torque	3 – 6 N·m (0.3 – 0.6 kg-m, 2.2 – 4.3 ft-lb)

6) Attach covers as before.

2) Adjustment

1) Position claw of latch into lock condition by pushing the claw with screwdriver.

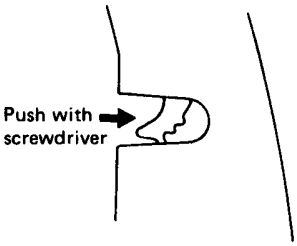

A24-758

Fig. 14-137

2) In this condition, properly connect rods to levers with screws.
Do not pull rod excessively.

NOTE:
Before shutting rear gate, confirm that latch is unlocked by operating outer handle.

Downloaded from www.Manualslib.com manuals search engine

14-5. Body Parts and Outer Accessories

1. Front Bumper

4WD

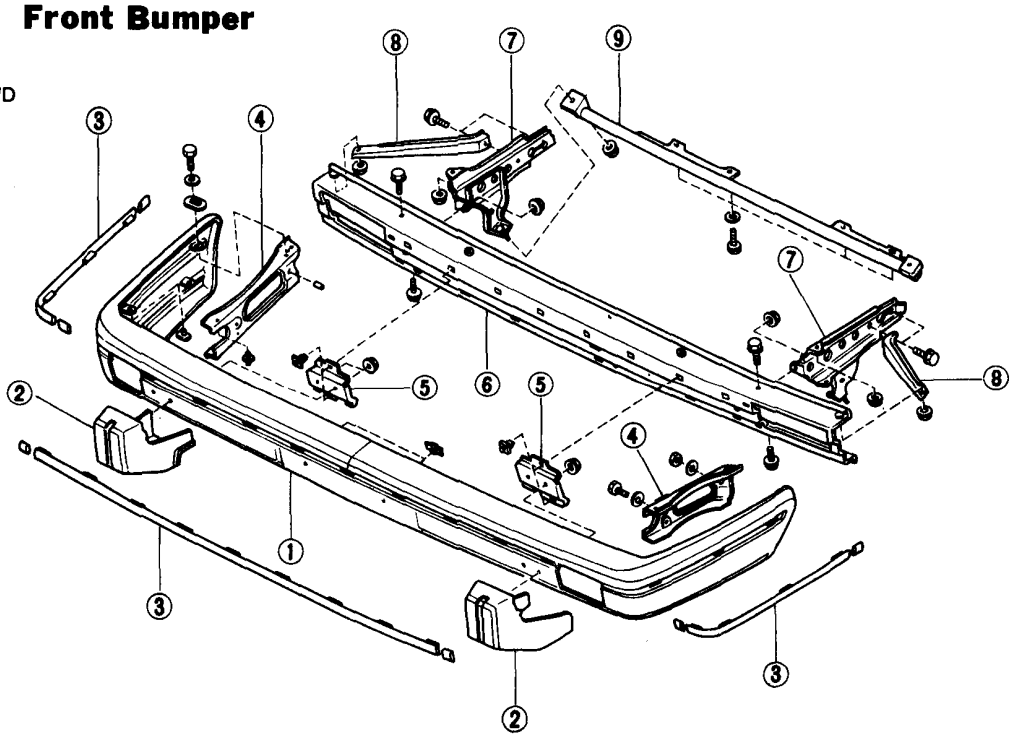

1 Plastic bumper
2 Bumper guard
3 Moulding
4 Side bracket
5 Bumper guard bracket
6 Beam
7 Stay
8 Side stay
9 Guard pipe

EXCEPT 4WD

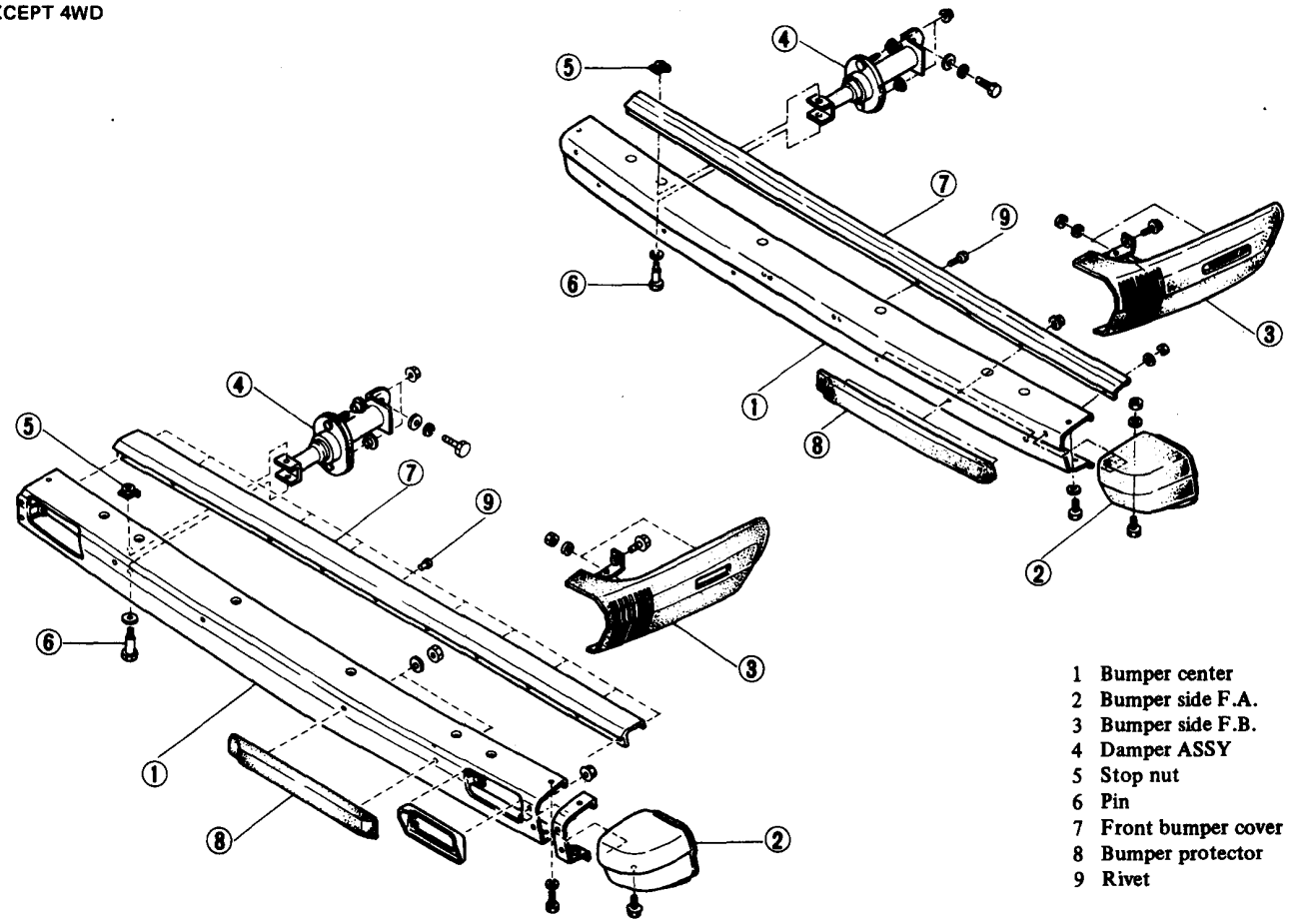

1 Bumper center
2 Bumper side F.A.
3 Bumper side F.B.
4 Damper ASSY
5 Stop nut
6 Pin
7 Front bumper cover
8 Bumper protector
9 Rivet

Fig. 14-138 Component parts of front bumper

A24-797

Downloaded from www.Manualslib.com manuals search engine

1. Removal

1) Disconnect mud guard from radiator panel at the front end of mud guard, and from fender at the inside of front bumper side B.
2) Disconnect electric connector for front side marker light.
3) Remove bumper side B.
4) Remove bolts attaching guard pipe to front skirt. (4WD)
5) Remove bolts and nuts attaching dampers (or stays) to body, and then take out bumper center along with dampers (or stays).
6) Separate dampers (or stays), bumper side A and guard pipe (4WD only) from bumper center.

NOTE:
a. Since the damper is filled with high pressure gas, never put it in fire nor disassemble it.
b. Since bumper side is made of soft plastics, be careful not to scratch it.

2. Installation

1) Attach dampers (or stays), bumper side A and guard pipe (4WD only) to bumper center.

Torque Damper pin and nut	47 – 71 N·m (4.8 – 7.2 kg-m, 35 – 52 ft-lb)

2) Install bumper center onto body with bolts and nuts.

Torque Damper bolts and nuts	16 – 27 N·m (1.6 – 2.8 kg-m, 12 – 20 ft-lb)

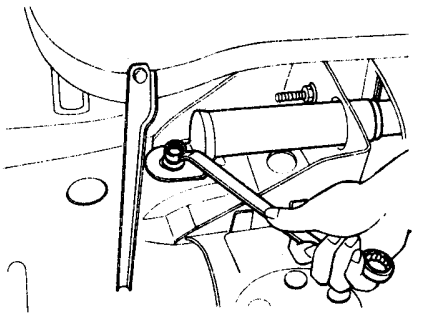
A24-326

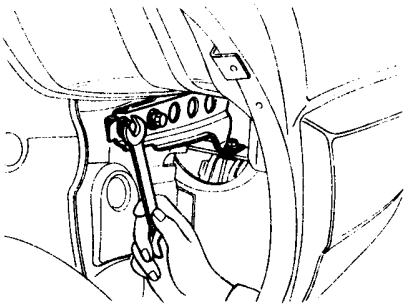
A24-331

Fig. 14-139 Removing bumper center

3) Attach guard pipe to front skirt. (4WD)

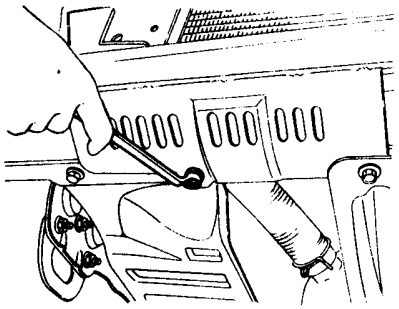
A24-330

Fig. 14-140

4) Install bumper side B with bolts and nuts.

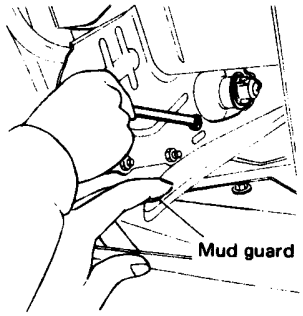

A24-325

Fig. 14-141

5) Connect electric connector for front side marker light.
6) Attach mud guard to radiator and front fender as before.

3. Replacement of Plastic Bumper

The plastic front bumper and inner beam can be replaced independently of each other.

NOTE:
The rear bumper can be replaced in the same manner as the front bumper.

1) Remove the bumper ASSY from the vehicle and detach the following parts from the bumper ASSY.
a. Stay, side stay and guard pipe
b. Bumper guard and bracket
c. Side bracket
d. Moulding
2) Detach the flanged portion of the beam from the upper and lower grooves of the plastic bumper. Unfasten the clip of the bumper from the hole in the beam and separate the beam from the bumper.

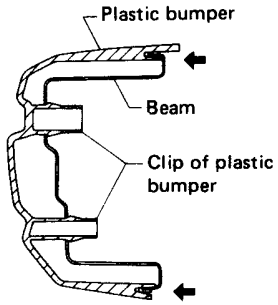

A24-805

Fig. 14-142

3) The plastic bumper and beam can be assembled in the reverse order.

NOTE:
Ensure that the flanged portion of the beam is inserted securely in the upper and lower grooves of the bumper.

Downloaded from www.Manualslib.com manuals search engine

2. Rear Bumper

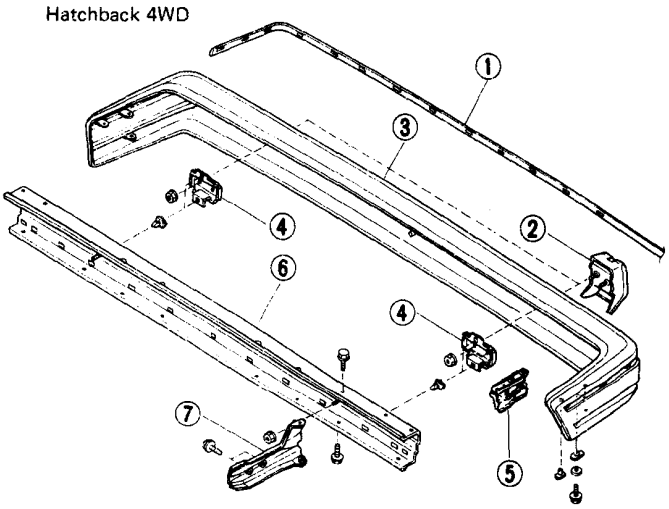

1 Moulding
2 Bumper guard
3 Plastic bumper
4 Bumper guard bracket
5 Side bracket
6 Beam
7 Stay

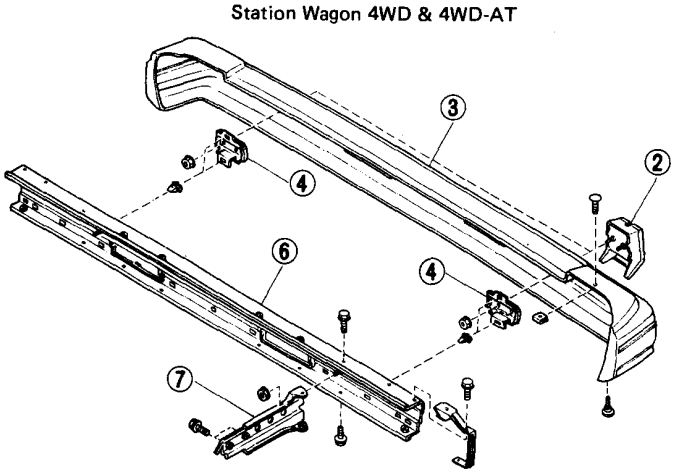

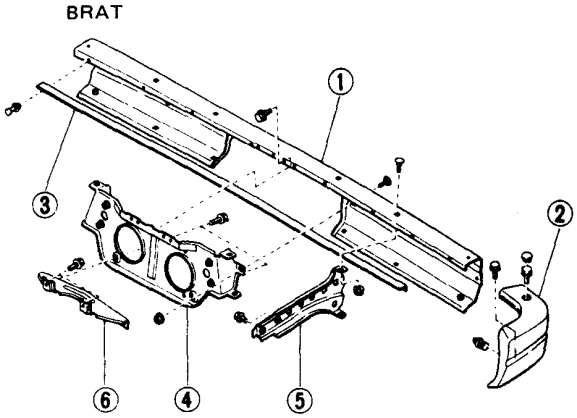

1 Bumper center
2 Bumper side
3 Cover
4 License plate bracket
5 Stay
6 Reinforcement

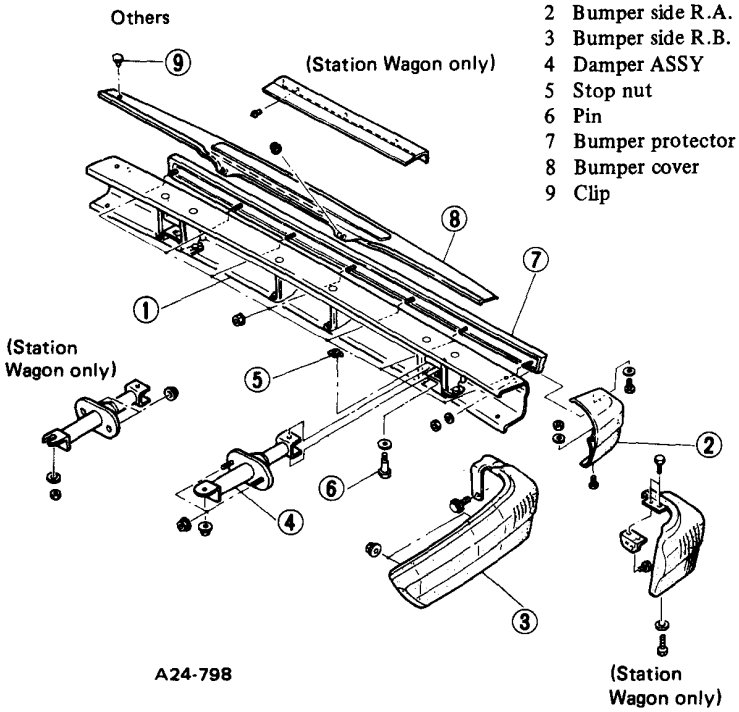

1 Bumper center
2 Bumper side R.A.
3 Bumper side R.B.
4 Damper ASSY
5 Stop nut
6 Pin
7 Bumper protector
8 Bumper cover
9 Clip

Fig. 14-143 Component parts of rear bumper

Downloaded from www.Manualslib.com manuals search engine

1. Removal

1) (except 4WD) Detach bumper cover.
2) Remove bumper side B.
3) Remove bolts and nuts attaching dampers (or stays) to body, and then take out bumper center along with dampers (or stays).
4) Separate dampers (or stays) and bumper side A from bumper center.

NOTE:

a. Since the damper is filled with high pressure gas, never put it in fire nor disassemble it.

b. Since bumper side is made of soft plastic, be careful not to scratch it.

2. Installation

1) Attach dampers (or stays) and bumper side A to bumper center.

Torque Damper pin and nut	47 – 71 N·m (4.8 – 7.2 kg-m, 35 – 52 ft-lb)

2) Install bumper center onto body with bolts and nuts.

Torque Damper pin and nut	16 – 27 N·m (1.6 – 2.8 kg-m, 12 – 20 ft-lb)

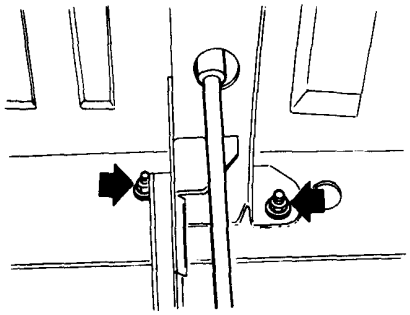

A24-334

Fig. 14-144

3) Install bumper side B with bolts and nuts.

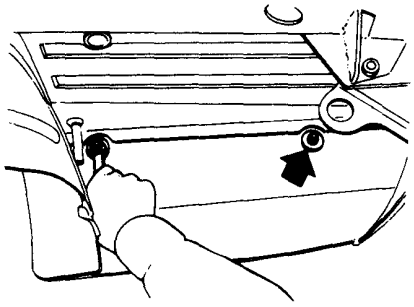

A24-333

Fig. 14-145

4) Attach bumper cover with two flange nuts in trunk room, and with two clips fixing it to bumper side. (except 4WD)

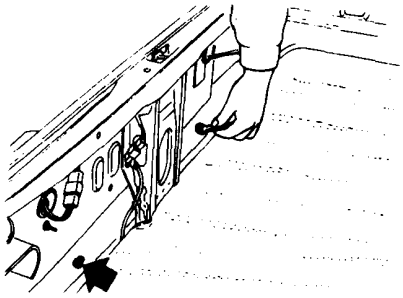

A24-332

Fig. 14-146

Downloaded from www.Manualslib.com manuals search engine

3. Front Hood

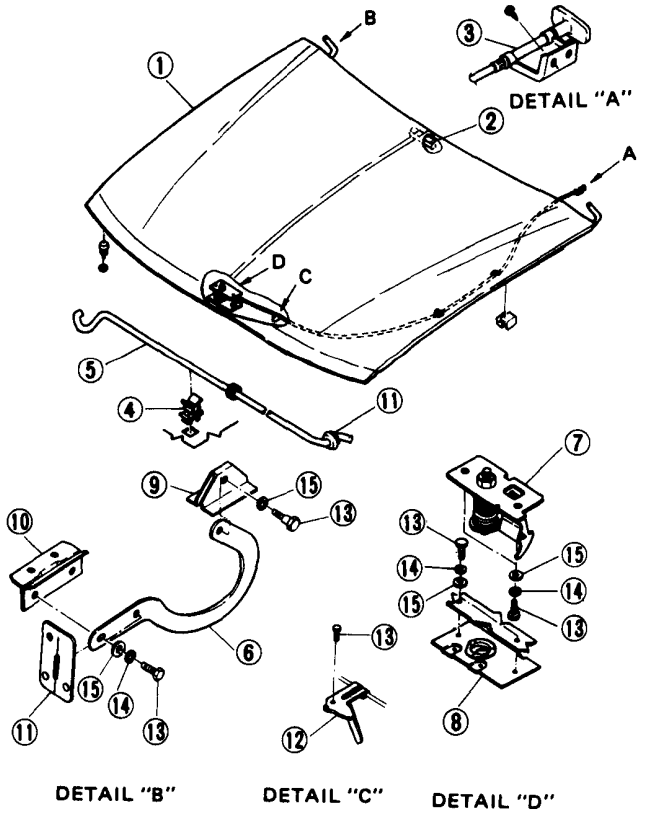

1 Front hood
2 Grommet
3 Front hood release cable
4 Hood stay clip
5 Hood stay
6 Hinge
7 Striker assembly
8 Front hood lock
9 Hinge bracket
10 Front hood bracket
11 Rubber plate
12 Clip
13 Bolt
14 Spring washer
15 Washer

Fig. 14-147

• Adjustment

1) The forward and rearward, and leftward and rightward adjustments of the striker assembly and the lock assembly are done by loosening the installing bolts.

2) For upward and downward directions adjust depending upon the close contact of the hood to baffer, the stepped difference between the front hood and the fender and the condition of an operating force of the release cable.
The adjusting method is done by loosening the lock nut of the striker, and a length of the striker.

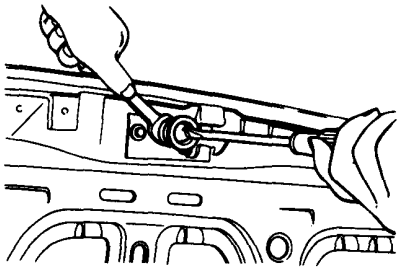

Fig. 14-148 Adjusting striker

• Hood Lock Release Cable

1) Release cable from the following parts.
a. Lock assembly
b. Clip on radiator panel
c. Clips on wheel apron
d. Release bracket under instrument panel
2) Attach (new) release cable as before.

NOTE:
Confirm that the engagement of the striker is correct and operation of the release cable and locations of cable clips are correct.

Downloaded from www.Manualslib.com manuals search engine

4. Trunk Lid

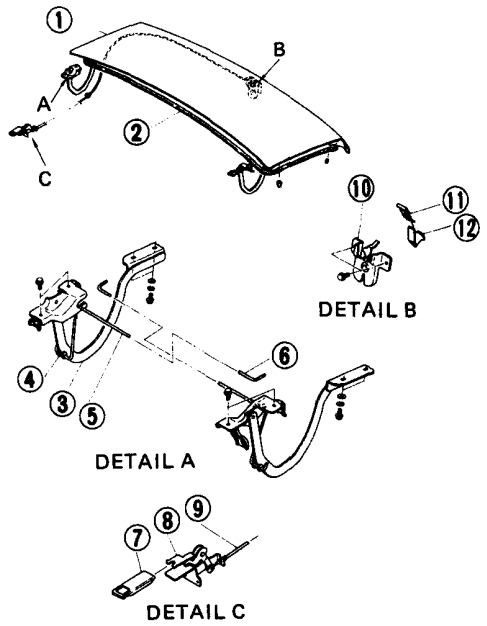

1 Trunk lid complete
2 Weatherstrip
3 Hinge assembly
4 Roller
5 Torsion bar
6 Torsion bar
7 Trunk opener knob
8 Trunk opener handle
9 Trunk opener cable
10 Lock assembly
11 Clip
12 Key lock assembly

A24-313

Fig. 14-149

• Torsion Bar

1) Open trunk lid and remove torsion bar at opposite end of hinge.
2) Remove torsion bar end hooking up with trunk lid hinge.

NOTE:
Care should be taken that when the torsion bar is removed from the hinge, hood might drop down with its dead weight.

3) Remove torsion bar from bracket at its center.
4) Attach (new) torsion bar as before.

NOTE:
a. Apply grease to the contact area of roller and hinge.
b. Since left and right torsion bars are different, don't misuse them.

• Trunk Lid Opener

1) Take out pullhandle knob by pulling forward.
2) Release cable from the following parts.
a. Trunk lid lock
b. Clamp on right-hand hinge
c. Clips and tapes after removing rear seat, front seat hinge cover and side sill cover
d. Pullhandle

NOTE:
Be careful not to kink cable.

3) Remove pullhandle from cross-member.

4) Install pullhandle with screw.

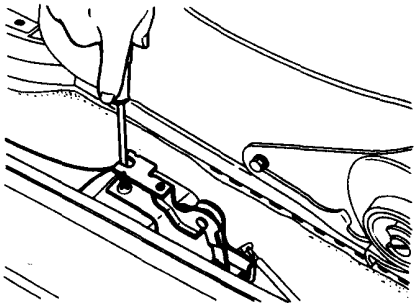

A24-320

Fig. 14-150

5) Connect cable to pullhandle.

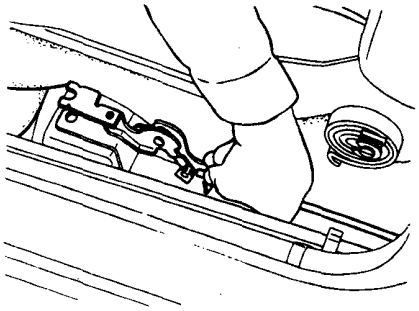

A24-319

Fig. 14-151

6) Fix cable as before with clips and tapes, and install rear seat, front seat hinge cover and side sill cover.

NOTE:
Renew all clips and tapes.

7) Connect cable to right-hand hinge with clamp.
8) Connect cable to trunk lid lock.
9) Insert knob to pullhandle.

• Weatherstrip

Attach the trunk room weatherstrip by pushing it down from the upper side so as to be attached to the surrounding in position.

NOTE:
Set weatherstrip so that its juncture comes to the center of rear skirt (rear panel of trunk room).

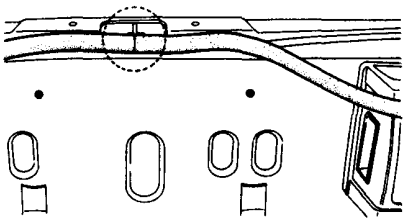

A24-321

Fig. 14-152 Installing weatherstrip

Downloaded from www.Manualslib.com manuals search engine

5. Front Fender

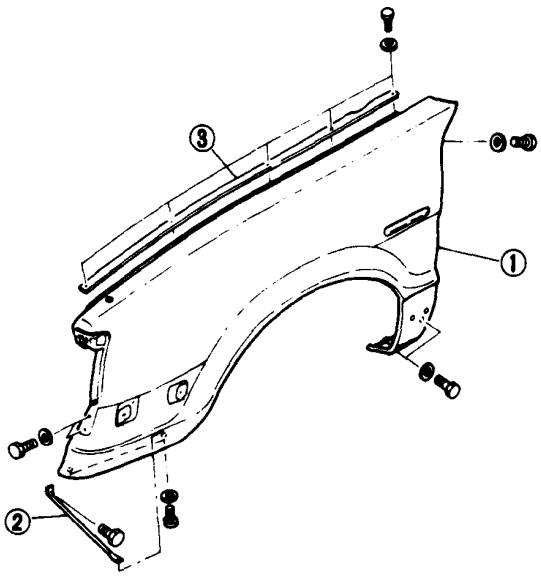

1 Front fender
2 Fender stay
3 Sealer

A24-738

Fig. 14-153

1) Remove the following parts.
a. Mud guard
b. Bolts fixing bumper side
c. Front grille
d. Front bumper
e. Front combination light
f. Radio antenna along with bracket
g. Body side protector
h. Cowl panel
2) Detach front fender by removing bolts.

NOTE:
When removing fender, be careful not to damage body with edge of fender.

3) Attach (new) front fender in position.
4) Uniformly arrange gaps between front hood and fender and between front door and fender.

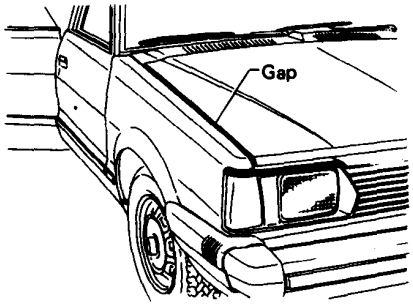

A24-356

Fig. 14-154 Gap between front hood and fender

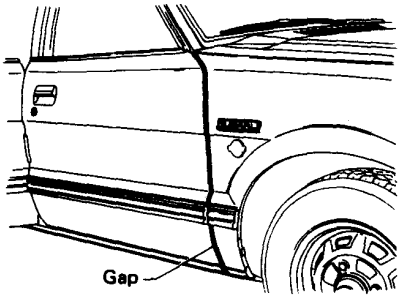

A24-357

Fig. 14-155 Gap between front door and fender

5) Renew sealer.
6) Install the following parts as before.
a. Cowl panel
b. Body side protector
c. Radio antenna along with bracket
d. Front combination light
e. Front bumper
f. Front grille
g. Bolts fixing bumper side
h. Mud guard

6. Cowl Panel

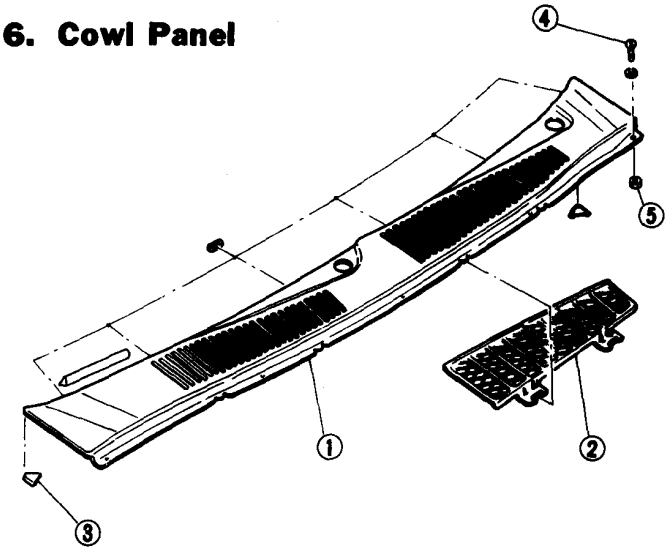

1 Cawl panel
2 Cawl net
3 Cap
4 Screw
5 Screw grommet

A24-340

Fig. 14-156 Cowl panel

Downloaded from www.Manualslib.com manuals search engine

1) Remove wiper arms, and open front hood.
2) Remove five installing screws.
3) Remove cowl panel by shifting it forward to pull its flange portion out of front panel.

NOTE:
When removing cowl panel, be careful not to damage painted surface of body.

4) Install (new) cowl panel in position.

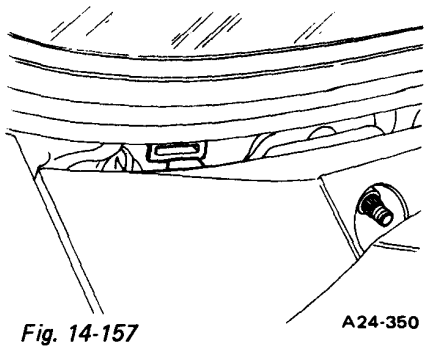

Fig. 14-157

5) Install wiper arms as before.

7. Fuel Flap and Key Lock

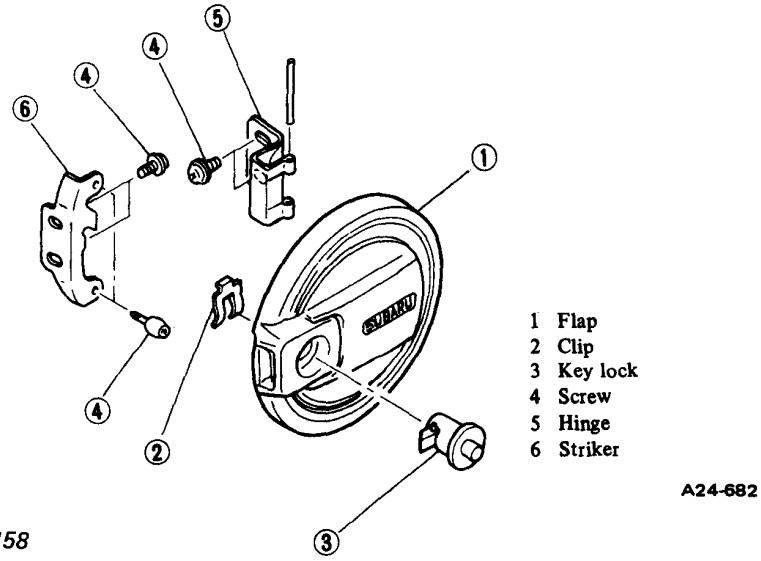

Fig. 14-158

1) Open fuel flap and remove clip at behind of flap.
2) Pull out key lock, and attach new one with clip.
3) Replace flap by removing/tightening screws attaching flap to body at hinge.

NOTE:
Position hinge so that flap is attached to body properly.

8. Mud Guard

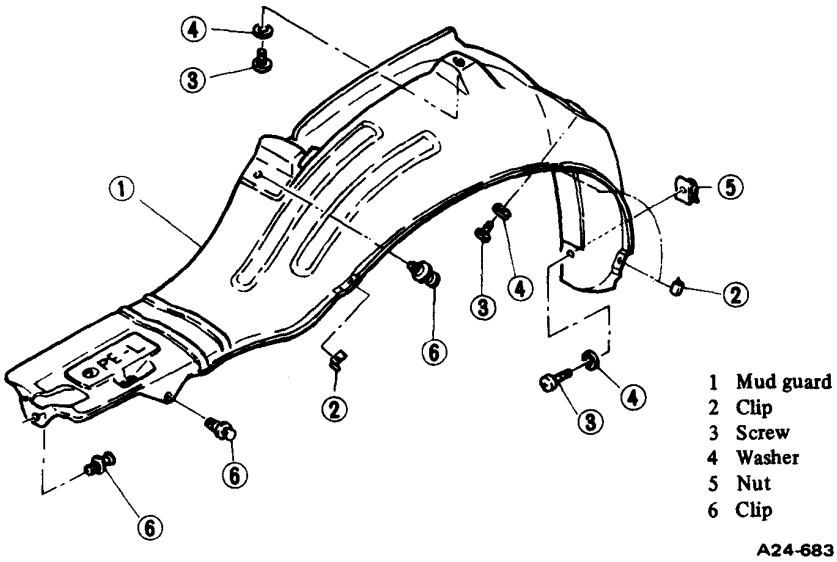

Fig. 14-159 Mud guard

1) Jack up the vehicle at its front, set rigid rack, and remove front wheels.
2) Remove all screws and clips fixing mud guard excluding clips inserted in the flange of fender, shift mud guard to the inside of the vehicle, and remove mud guard by pulling out clips from the fender flange.
3) Install (new) mud guard in position.

NOTE:
Renew all clips.

4) Install front tires and wheels as before.

Downloaded from www.Manualslib.com manuals search engine

9. Splash Board

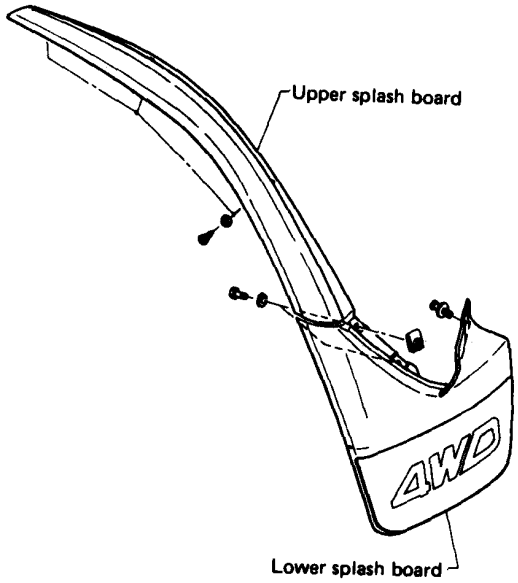

A24-580

Fig. 14-160

1) Detach upper splash board by removing three tapping screws and by removing one bolt which fixes both upper splash board and lower splash board.
2) Detach lower splash board as follows.
a. Remove two fixing bolts (one of them is fixing both upper and lower splash board and is already removed upon removing upper splash board).
b. Remove lower splash board by pulling out plastic clip from the rear wheel apron.
3) Attach (new) lower and upper splash boards in position.

NOTE:
Apply anticorrosive agent to the back of the screws tightening upper splash board as shown below.

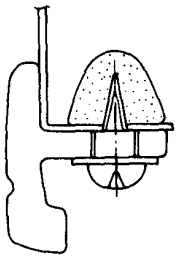

A24-713

Fig. 14-161 Applying anticorrosive agent

10. Body Protector

1) Remove door trim panels.
2) Peel of sealing covers.
3) Push out clips with screwdriver. For fender portions, push out clips after removing mud guard.

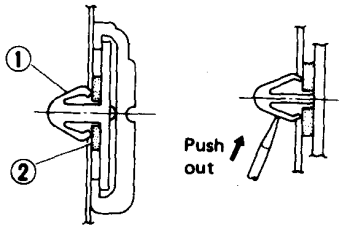

1 Clip
2 Packing

A24-675

Fig. 14-162 Installation detail

4) Install (new) body protectors by inserting clips by hand.

11. Ornaments and Letter Marks

1) Ornaments, letter marks, etc. are fixed by double face adhesive tapes. Rip off the tapes by inserting a thin but strong string like fishline.

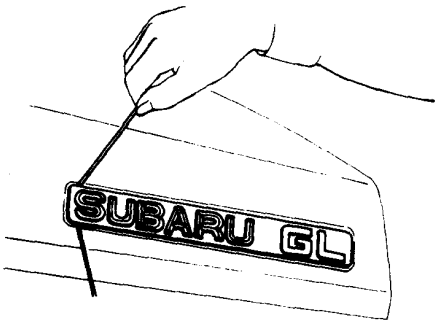

A24-714

Fig. 14-163 Removing ornaments

2) The portions to be fitted with ornaments, etc. are provided with recess.
Install ornaments, etc. aligning with the recess.

NOTE:
a. Renew double face adhesive tape at every removal.
b. If ornaments, etc. are deformed, replace them with new ones.

12. Window Moulding

1) Remove corner joint by prying it with screwdriver.
2) Raise slightly the edge of moulding, and detach the moulding while sliding screwdriver under the moulding.
3) Installation can be carried out in the reverse order of removal, paying attention to the following.
a. Apply soapy water or kerosene to weatherstrip.
b. In case of wide stainless steel moulding, set work cord to the lip of weatherstrip, and then pull out the work cord while depressing moulding.

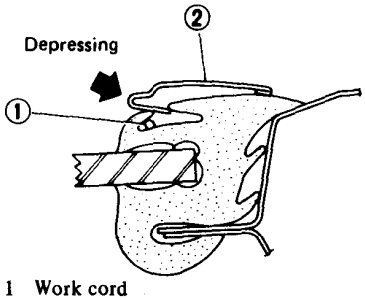

1 Work cord
2 Moulding

A24-600

Fig. 14-164 Installing moulding

Downloaded from www.Manualslib.com manuals search engine

13. Roof Moulding

1) (Hardtop) Cut off the heads of three rivets fixing roof moulding to front pillar.
2) (Hatchback and Station Wagon) Remove joint between front and rear roof mouldings.
3) Detach (front and rear) moulding (along with clip) by pulling it with fingers or cloth wound around screwdriver so as not to damage body surface.
4) Install (new) roof moulding to drip rail by depressing it with hand.

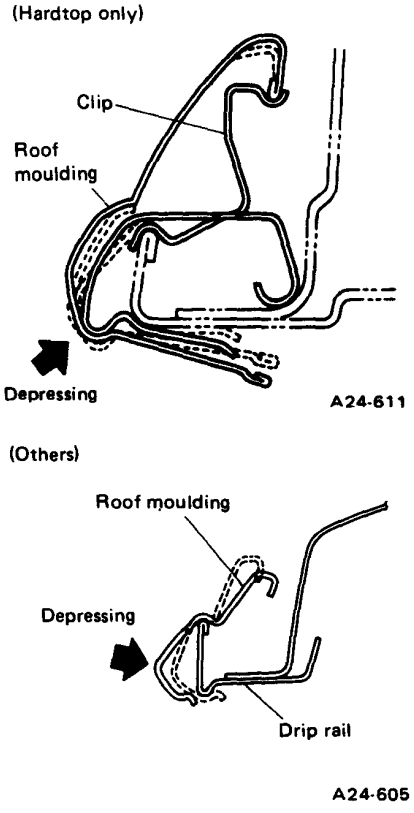

Fig. 14-165

5) (Hardtop) Install roof moulding to front pillar with a blind rivet.

14. Rear Pillar Moulding (Sedan)

1) Remove upper rear pillar turn panel from inside of vehicle.
2) Remove two nuts through service holes.

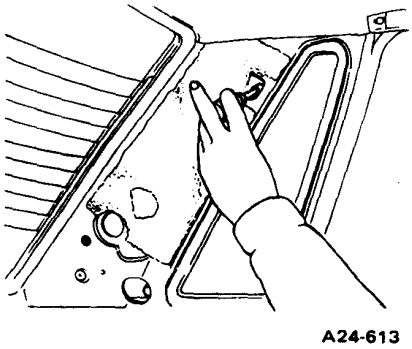

Fig. 14-166 Removing nuts

3) Take out rear pillar moulding with rear end of roof moulding raised.
4) Installation can be carried out in the reverse order of removal.

15. Sealer, Sealing Parts and Insulator

1) Plate partition and borings of the body are provided with sealing compound so as to prevent water or dust from entering the interior. After repairing or overhauling, be sure to apply the specified sealing compound.
2) Since entrance of water or dust through some of gage holes or work holes utilized in manufacturing body might adversely affect the vehicle, they are closed by plugs or sealing tapes.
After repairing or overhauling, be sure to close the holes again with the specified parts.
3) To eliminate water leakage through rear window weatherstrip. 4-Door Sedan and Hardtop are equipped with drain tubes which are located at both sides of trunk room interior.

Downloaded from www.Manualslib.com manuals search engine

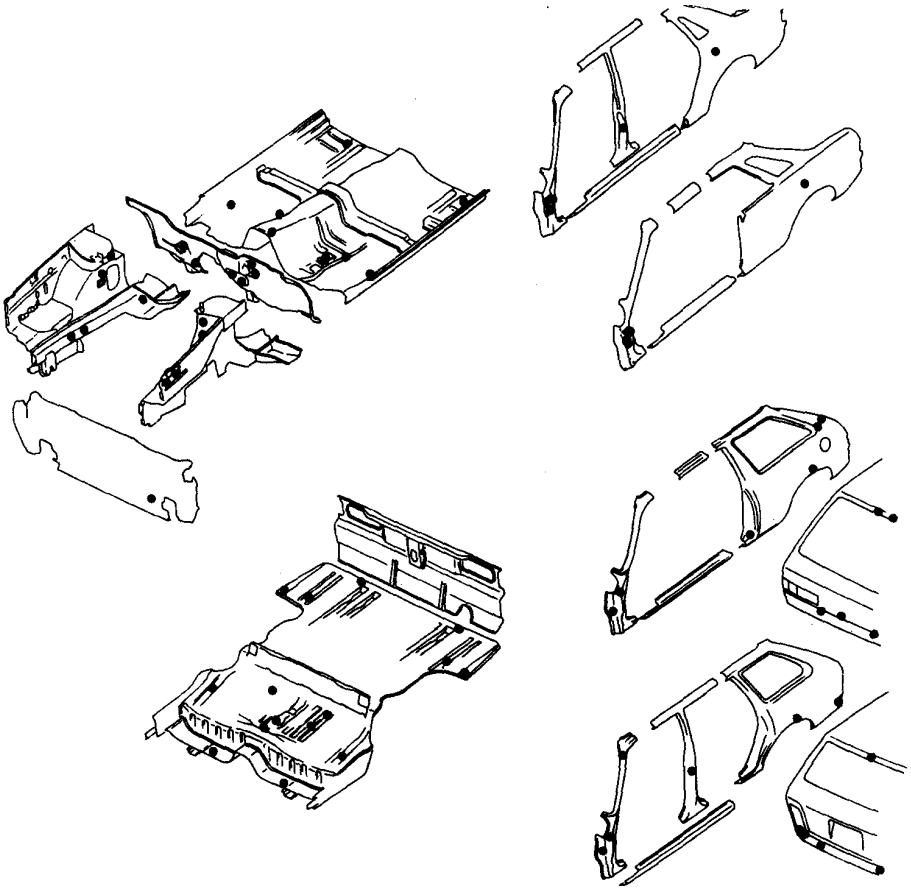

A24-799

Fig. 14-167

Downloaded from www.Manualslib.com manuals search engine

14-6. Instrument Panel

1. Component Parts

NOTE:
Instrument panels for other combination meters i.e. with tachometer, etc. and with digital meter, are essentially the same as this configuration.

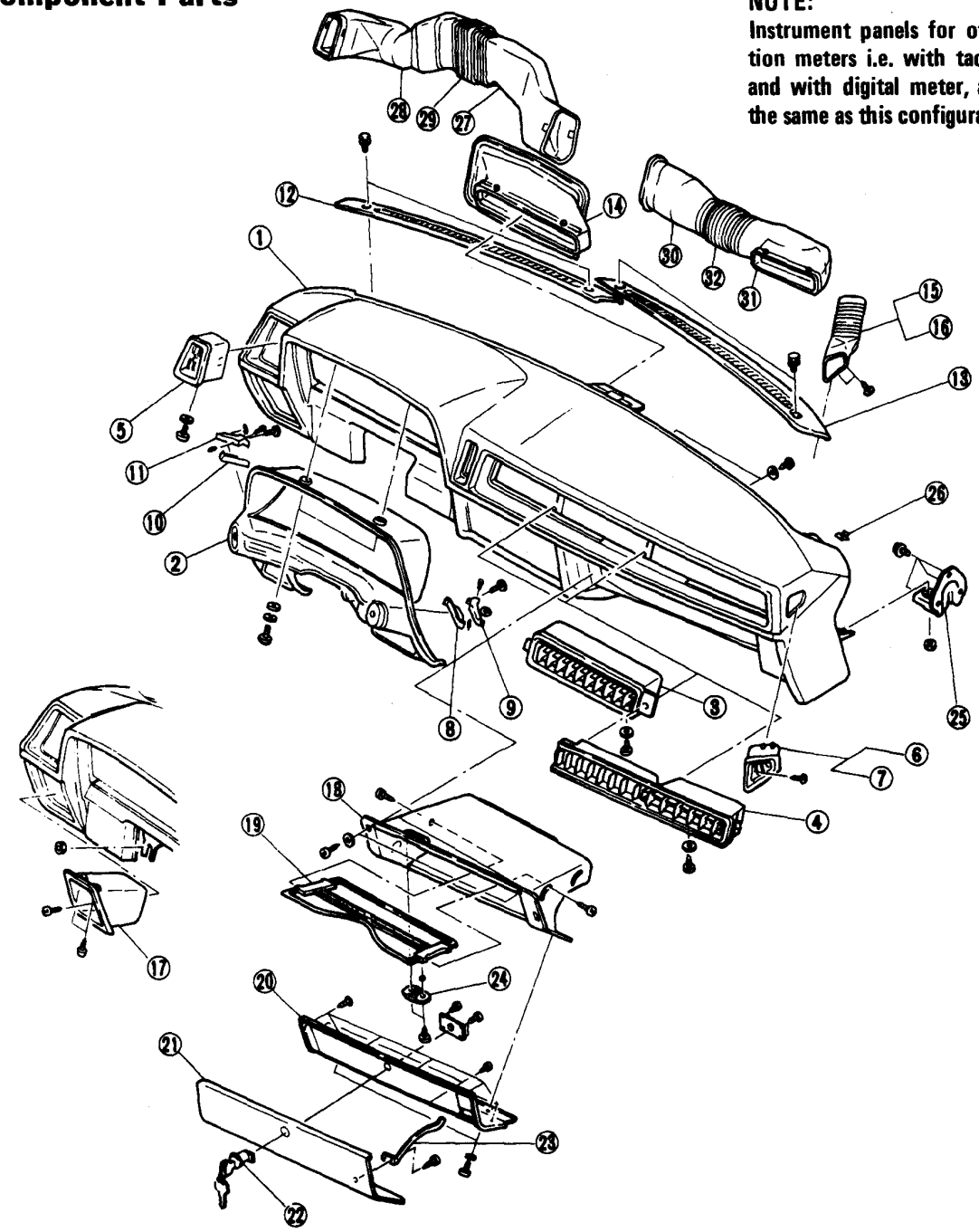

1 Pad and frame assembly
2 Visor and switch box
3 Center grille
4 Side grille
5 Side ventilation grille
6 Side defroster grille L.H.
7 Side defroster grille R.H.
8 Wiper plate
9 Wiper indicator lamp
10 Lighting plate
11 Lighting indicator lamp
12 Defroster grille L.H.
13 Defroster grille R.H.
14 Center duct
15 Side defroster duct L.H.
16 Side defroster duct R.H.
17 Coin box
18 Glove box
19 Shelf
20 Panel
21 Glove box lid
22 Lock assembly
23 Stay
24 Striker
25 Instrument panel bracket
26 Speed nut
27 Side ventilation duct A (L.H.)
28 Side ventilation duct B (L.H.)
29 Joint L.H.
30 Side ventilation duct C (R.H.)
31 Side ventilation duct D (R.H.)
32 Joint R.H.

Fig. 14-168 Component parts of instrument panel

Downloaded from www.Manualslib.com manuals search engine

2. Instrument Panel

NOTE:
Although instrument panel can be replaced with windshield glass installed, it will facilitate removal/installation of instrument panel to remove windshield glass.

1) Removal

1) Remove the following parts.
a. Trim panel on driver side
b. Luggage shelf on front passenger side
c. Radio box or console box
2) Remove two bolts fixing steering column.
3) Disconnect the following cables, etc.
a. Speedometer cable
b. Electrical wiring
c. Cables for heater control
d. Vacuum hoses for heater control
4) Remove one nut at the bottom of combination meter.

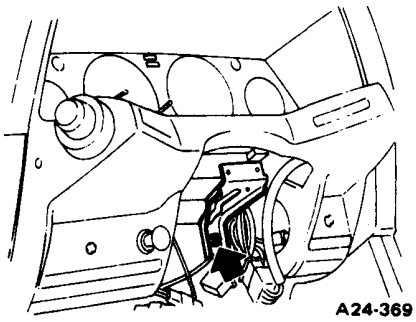

Fig. 14-169 Removing nut of combination meter

5) Remove two nuts on both side pillars.
6) Detach clips and take out defroster grille.
7) Remove three installing bolts at the top of instrument panel.

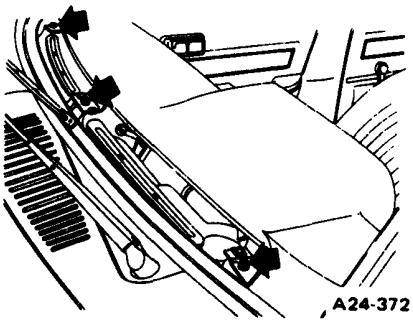

Fig. 14-170 Removing bolts at its top

8) Detach defroster ducts and ventilator ducts on both sides.
9) Take out instrument panel by lifting up obliquely toward the rear.

2) Installation

Installation can be carried out in the reverse order of removal.

NOTE:
Pay attention not to damage the wiring harnesses, cables, vacuum hoses, etc. when installing instrument panel to the vehicle body.

3) Cleaning

When white spots are appeared on surface of instrument panel, clean it as following procedure.
1) Wipe with clean and damp cloth.
2) If the spots remain, apply powder of calcium carbonate with clean cloth. Then, rub with clean and damp cloth to remove the powder. Wipe again with dry clean cloth.

3. Glove Box

1) Remove luggage shelf on front passenger side.
2) Remove screws at the bottom of glove box lid.
3) Pull out stay from the opening of glove box while rotating lid upward, and take out glove box lid.

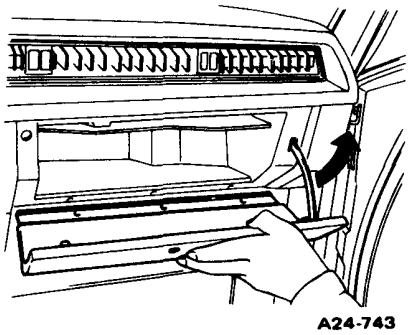

Fig. 14-171 Pulling out stay

4) Detach glove box light by rotating it clockwise, and leave it in glove box with electric wiring connected.

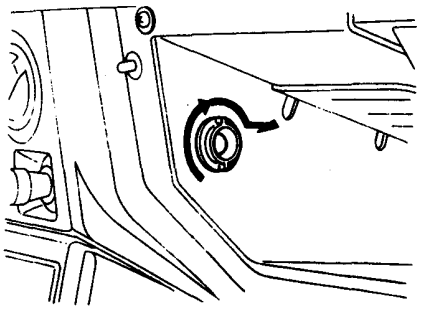

Fig. 14-172 Removing glove box lighting

5) Remove screws at the top of glove box.
6) Detach clamp of vacuum hose at the bottom of glove box.
7) Pull out glove box toward you, and disconnect electric connector for glove box light and switch.
8) Installation can be carried out in the reverse order of removal.

4. Heater Control Panel

1) Detach radio box or console box.
2) Pull out fan switch dial, temperature control dial and mode lever knob.

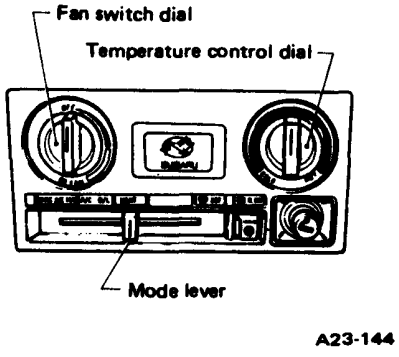

Fig. 14-173 Removing dials etc.

3) Remove nuts for fan switch and temperature controler.

Downloaded from www.Manualslib.com manuals search engine

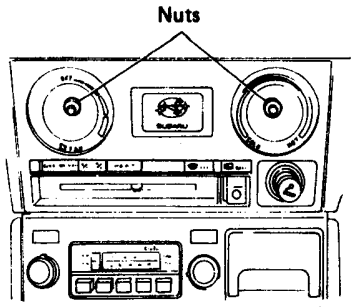

A24-685

Fig. 14-174 Removing nuts

4) Remove screws fixing the bottom of control panel.
5) Disconnect respective electric wiring for cigarette lighter, rear defogger switch and panel illumination lights.
6) Installation can be carried out in the reverse order of removal.

5. Meter Visor

1) Detach trim panel on driver side.
2) Remove installing screws, disconnect electric wiring for lighting switch, etc., and then pull out meter visor ASSY in parallel with steering column.

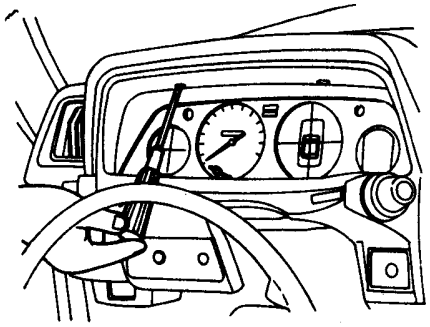

A25-246

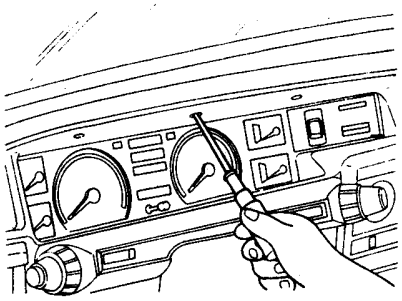

A25-556

Fig. 14-175

NOTE:
For GL model, remove ventilation knob, covers and screws.

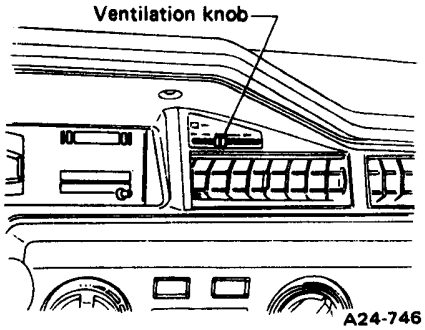

A24-746

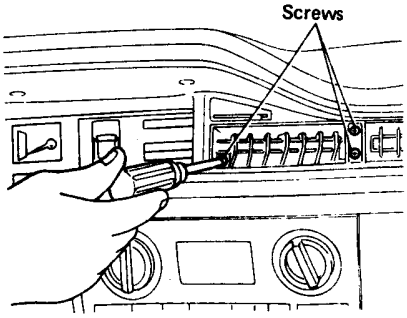

A25-557

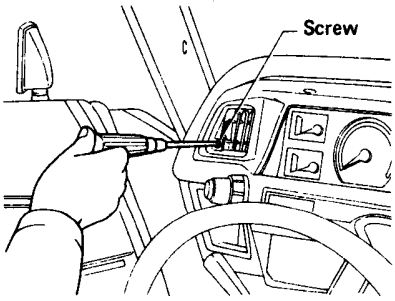

A25-558

Fig. 14-176

3) Installation can be carried out in the reverse order of removal.

Downloaded from www.Manualslib.com manuals search engine

14-7. Seat and Belt

1. Front Seats

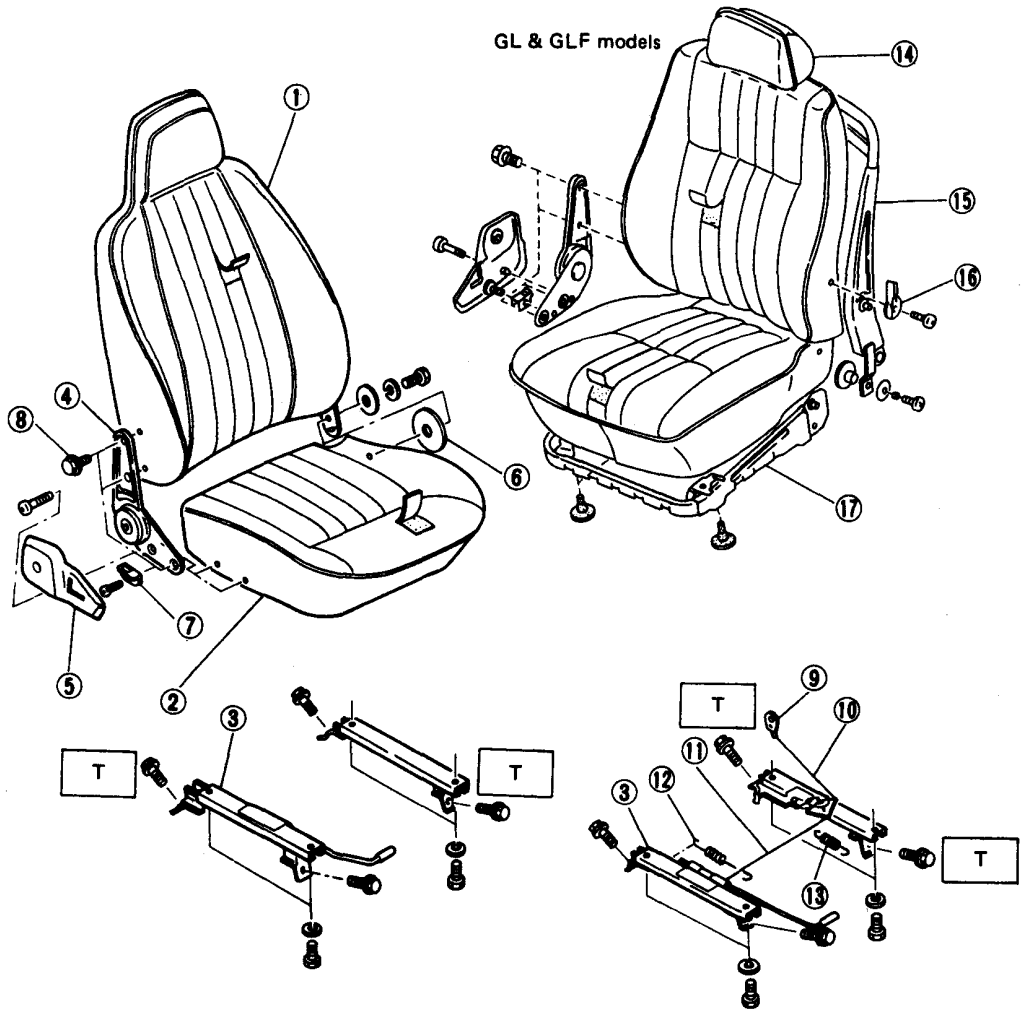

1 Backrest assembly
2 Cushion assembly
3 Slide rail assembly
4 Hinge assembly
5 Hinge cover
6 Bushing
7 Hinge knob
8 Bolt
9 Link
10 Wire A
11 Wire B
12 Helper spring
13 Spring
14 Head rest
15 Backrest frame
16 Lumbar knob
17 Cushion frame

Tightening torque N·m (kg-m, ft-lb)
T: 13 – 23 (1.3 – 2.3, 9 – 17)

Fig. 14-177 Component parts of front seats

1) Removal

1) Slide front seat to the rearmost position.
2) Remove two installing bolts at the front side.
3) Slide front seat to the foremost position.
4) Remove two installing bolts at the rear side.
5) Remount both front seats, and detach slide rails. For passenger's seat of Hatchback (except STD) and Hardtop, detach walk-in helper spring from slide rails.

2) Installation

1) Set both inner and outer rails of front seat at the rearmost position onto front seat.
2) Mount front seat on the body.
3) Temporarily fix front bolts.
4) Slide front seat to the foremost position.
5) Install and tighten rear bolts to the specified torque.

Torque Front and rear bolts	13 – 23 N·m (1.3 – 2.3 kg-m, 9 – 17 ft-lb)

6) Slide front seat to the rearmost position, and tighten two bolts to the specified torque.
7) Hook walk-in helper spring onto slide rails.

Downloaded from www.Manualslib.com manuals search engine

2. Rear Seat

Sedan and Hardtop

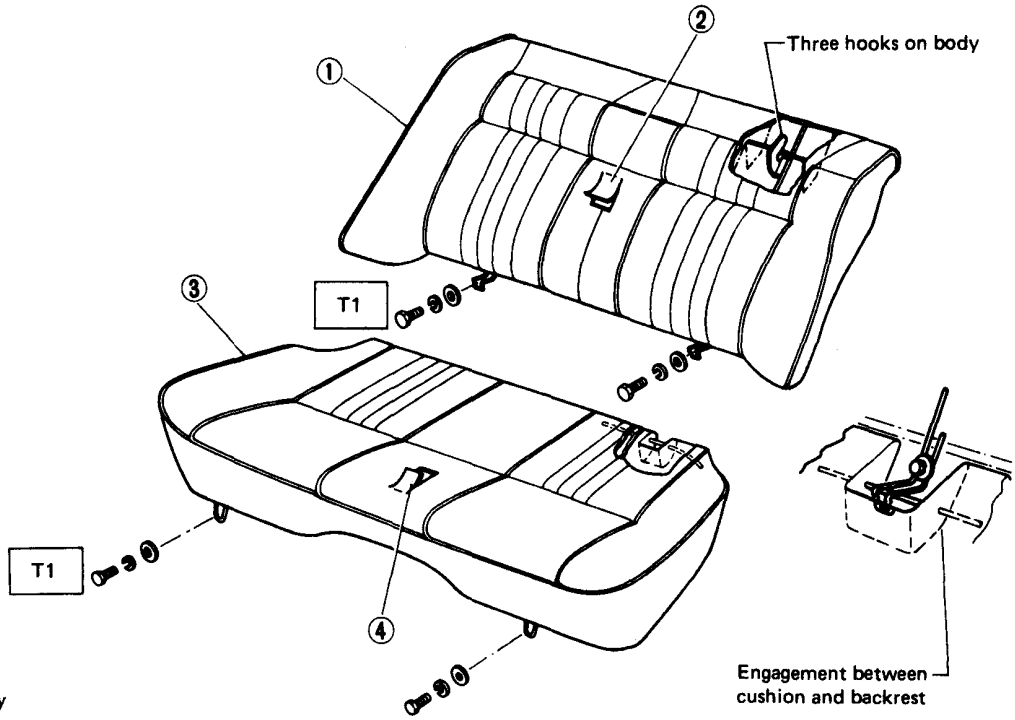

1 Backrest assembly
2 Backrest cover assembly
3 Cushion
4 Cushion cover assembly

A24-387

Station Wagon

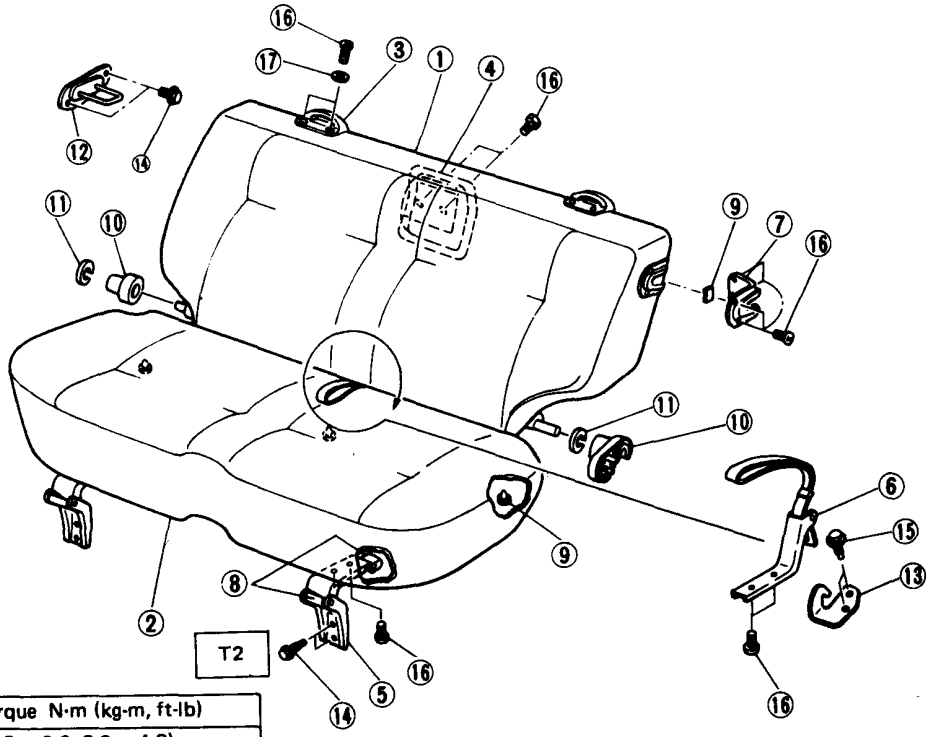

1 R Backrest assembly [Pad & Frame assembly (P/B), Cover assembly]
2 R Cushion assembly [Pad & Frame assembly (R/C), Cover assembly]
3 Hook R/B V.
4 Trim plate
5 Hinge assembly
6 Lock assembly
7 Cover hook
8 Stopper rubber
9 Cushion rubber
10 Bush (R/B)
11 Spacer
12 Striker R/B V.
13 Hook
14 Flange bolt
15 Flange screw
16 Screw
17 Plain washer

Tightening torque N·m (kg-m, ft-lb)
T1: 3 – 6 (0.3 – 0.6, 2.2 – 4.3)
T2: 5.4 – 9.3 (0.55 – 0.95, 4.0 – 6.9)

Fig. 14-178

A24-389

Downloaded from www.Manualslib.com manuals search engine

Hatchback

Bench type seat

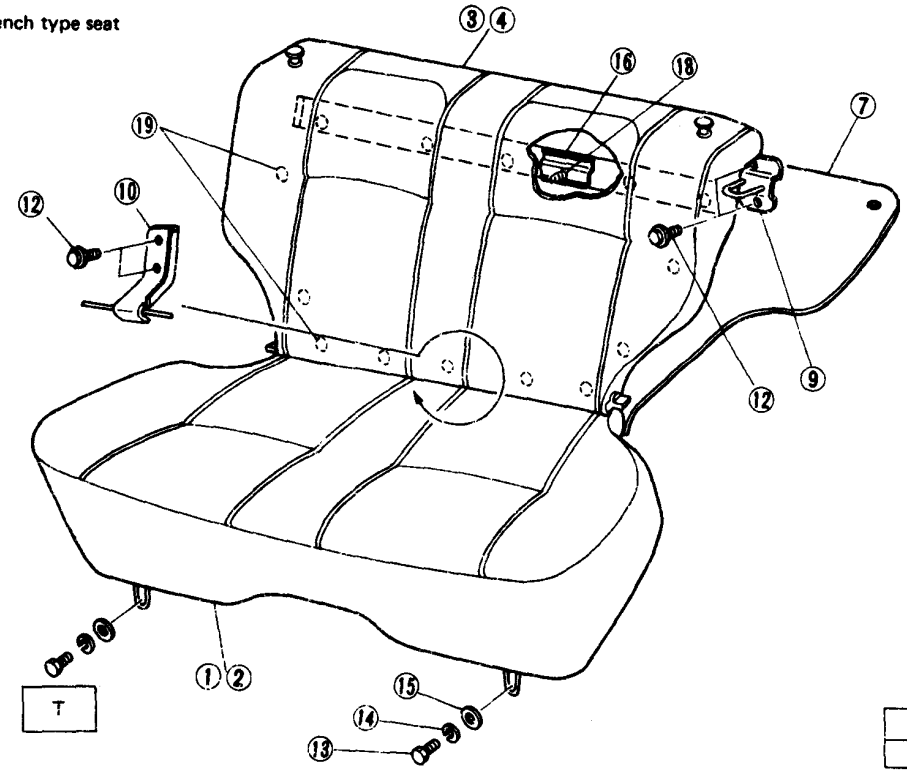

Tightening torque N·m (kg-m, ft-lb)
T: 3 – 6 (0.3 – 0.6, 2.2 – 4.3)

Separate type seat

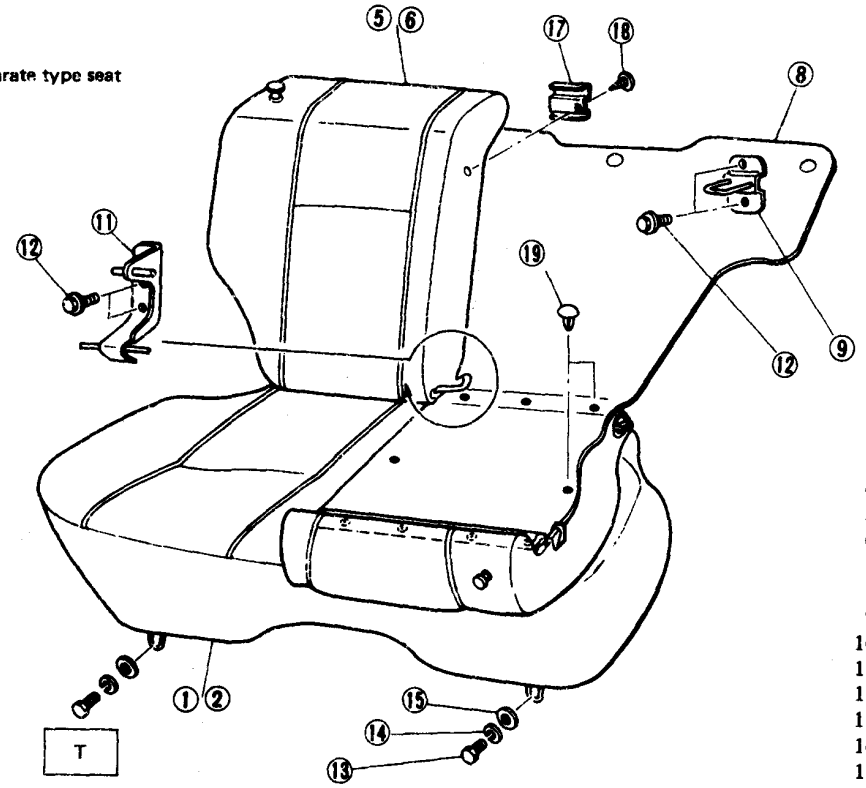

A24-388

1 Cushion assembly
2 Cushion cover assembly
3 Back rest assembly (Bench type)
4 Back rest cover assembly (Bench type)
5 Back rest assembly (Separate type)
6 Back rest cover assembly (Separate type)
7 Mat (Bench type)
8 Mat (Separate type)
9 Striker assembly
10 Cushion hook bracket
11 Cushion hook and hinge
12 Flange bolt
13 Bolt
14 Spring washer
15 Washer
16 Mat top cover (Bench type)
17 Mat top cover (Sparete type)
18 Tapping screw
19 Clip

Fig. 14-179 Component parts of rear seats (2-Door Hatchback)

Downloaded from www.Manualslib.com manuals search engine

BRAT

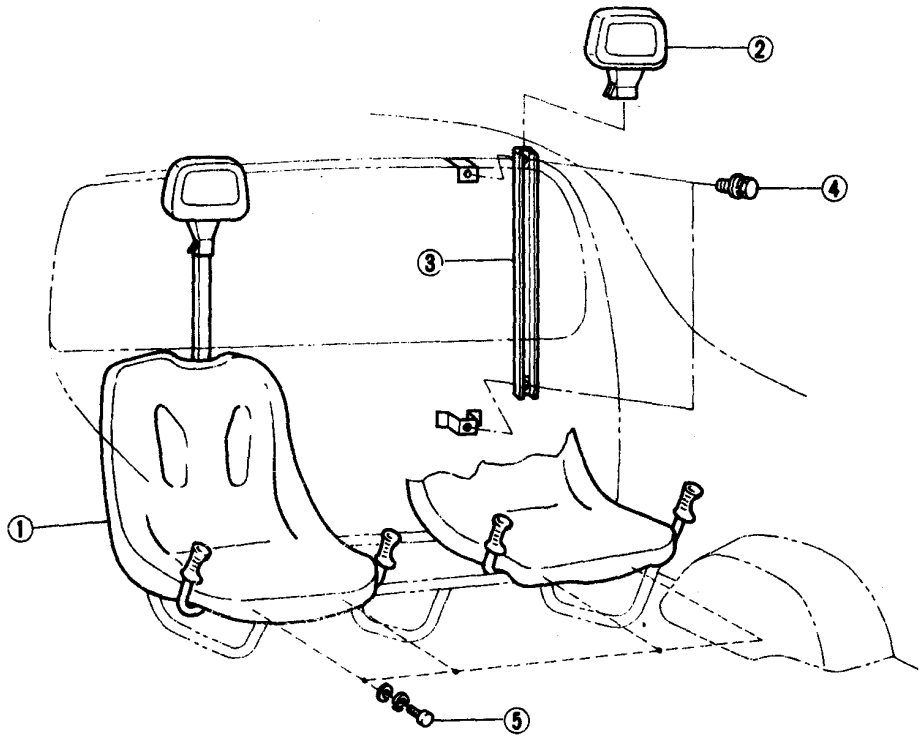

1 Rear seat
2 Head restraint
3 Rail (Head restraint)
4 Bolt & washer assembly
5 Oval head bolt

A24-248

Fig. 14-180

• Sedan and Hardtop

1) Removal

1) Remove two mounting bolts at the front of rear cushion.
2) Lifting the front of rear cushion slightly and depressing cushion near the bracket of back rest, move cushion foreward, and the rear cushion is removed.

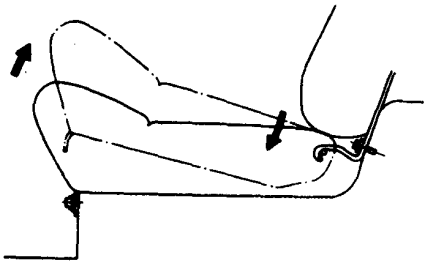

A24-391

Fig. 14-181 Removing rear cushion

3) Remove two mounting bolts at the bottom of back rest.
4) Lift back rest along rear bulkhead, and back rest is removed.

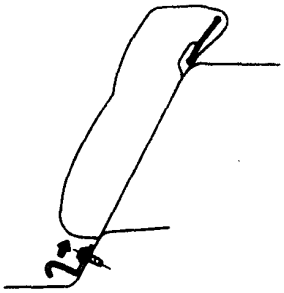

A24-392

Fig. 14-182 Removing back rest

2) Installation

1) Place back rest at its proper position, and tap it to align the holes of back rest bracket and of vehicle body.
2) Install back rest mounting bolts.

Torque	3 – 6 N·m (0.3 – 0.6 kg-m, 2.2 – 4.3 ft-lb)

NOTE:
Pay attention not to jam the mat.

3) Hook the rear of cushion to bracket of back rest by pushing cushion rearward while the front of it lifted slightly.
4) Align the front of rear cushion with the body, and install it with two mounting bolts.

Torque	3 – 6 N·m (0.3 – 0.6 kg-m, 2.2 – 4.3 ft-lb)

Downloaded from www.Manualslib.com manuals search engine

• Hatchback

1) Remove rear cushion as follows.
a. Remove two bolts fixing to the body at front of cushion.
b. Raise slightly the front of cushion and move it to front while depressing the center of cushion rear, thereby detaching the cushion from rear hook.
2) Remove back rest as follows.
a. Detach three hooks fixed at the extreme end of luggage compartment mat.
b. In case of separate type, remove two bolts for fixing hinge bracket to the body at the center of body.
c. Disengage the hook by pulling knob at the shoulder of back rest.
d. After inclining back rest a little forwardly, where two chamfered portions of hinge bushing matches with the cutout of bracket, remove back rest by pulling it up.

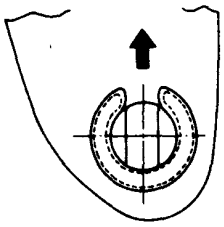

A24-393

Fig. 14-183 Removing back rest

3) Installation can be carried out in the reverse order of removal.

Tightening torque of cushion installing bolts	3 – 6 N·m (0.3 – 0.6 kg-m, 2.2 – 4.3 ft-lb)

NOTE:
a. Make sure of absolute locking by raising back rest and depressing it until an engaging sound is generated.
b. If lock is not engaged properly, make adjustment as follows.
• In case of separate type, loosen bolts for fixing the hinge at the center and make vertical adjustment.
• For both types, loosen bolts fixing striker and make adjustment upward and downward, leftward and rightward.

• Station Wagon

1) Removal

1) Remove four bolts fixing hinges of cushion to the body.
2) Disengage the lock at the rear of cushion from hook on the body, and remove cushion.

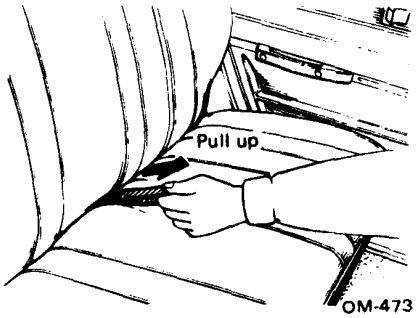

OM-473

Fig. 14-184 Removing rear cushion

3) Incline back rest forward.

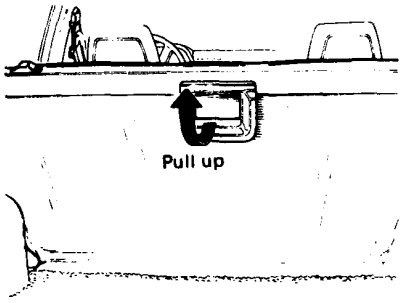

OM-474

Fig. 14-185 Inclining back rest

4) Turn forwardly bushing of back rest hinge on the left side of the body to disengage it from hinge pin, and remove it from the body by pulling it toward the center of the body.

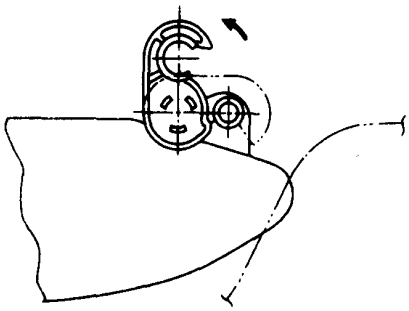

A24-396

Fig. 14-186 Turning bushing

5) Pull out hinge pin on right side out of the hole on the bracket in the right side of the body, while bringing back rest to the extreme left end.
6) Bring back rest to the right and pull out the left hinge pin, and back rest is removed.

2. Installation

1) Insert the left side hinge pin at the bottom of back rest completely into the rear hole of hinge bracket on the tire house.
2) Insert the right hinge pin into the hole in the body, and bring back rest to the extreme right end.
3) Insert the clip of hinge bushing securely into the front hole of the left bracket while keeping bushing verically.
4) Turn the bushing toward back rest hinge pin round clip portion of bushing, and engage it with hinge pin.
5) If a gap is provided between the left bushing and back rest upon moving back rest to the extreme right end, fit spacer according to the gap as follows.

Gap dimension	Spacer
0< ≦4	0
4< ≦8	One on the left side
8< ≦12	One each on both sides

6) Raise back rest and fix it by depressing it so that an engaging sound is heard from striker.

Downloaded from www.Manualslib.com manuals search engine

7) Engage the lock at the rear of cushion with the hook mounted to the body floor.
8) Install the two hinge assemblies at the front of cushion onto the vertical wall of the body rear floor by four 6 mm bolts.

Torque	5.4 – 9.3 N·m (0.55 – 0.95 kg-m, 4.0 – 6.9 ft-lb)

3) Adjustment

After installing the cushion and back rest, make sure that each lock is engaged completely.
If not, make adjustment in the following manner.
1) Cushion lock
Make adjustment in the following order.

a. Adjust setting of hook to body.
b. Adjust setting of lock assembly to cushion pan.
c. Adjust setting of hinge to cushion pan.
d. Adjust setting of hinge to body.

2) Hooks on both sides of back rest.
a. If proper engagement is not obtained vertically (the rod at the front of the striker does not come to the center of notched hole in the hook cover of the back rest), make adjustment by tapping the tip of the striker with a rubber hammer or the like.
b. If proper engagement is not obtained in the direction of body width (the hook does not engage striker properly because end bar interferes engagement), make adjustment by placing washer on the setting surface to the body.

Downloaded from www.Manualslib.com manuals search engine

3. Seat Belts

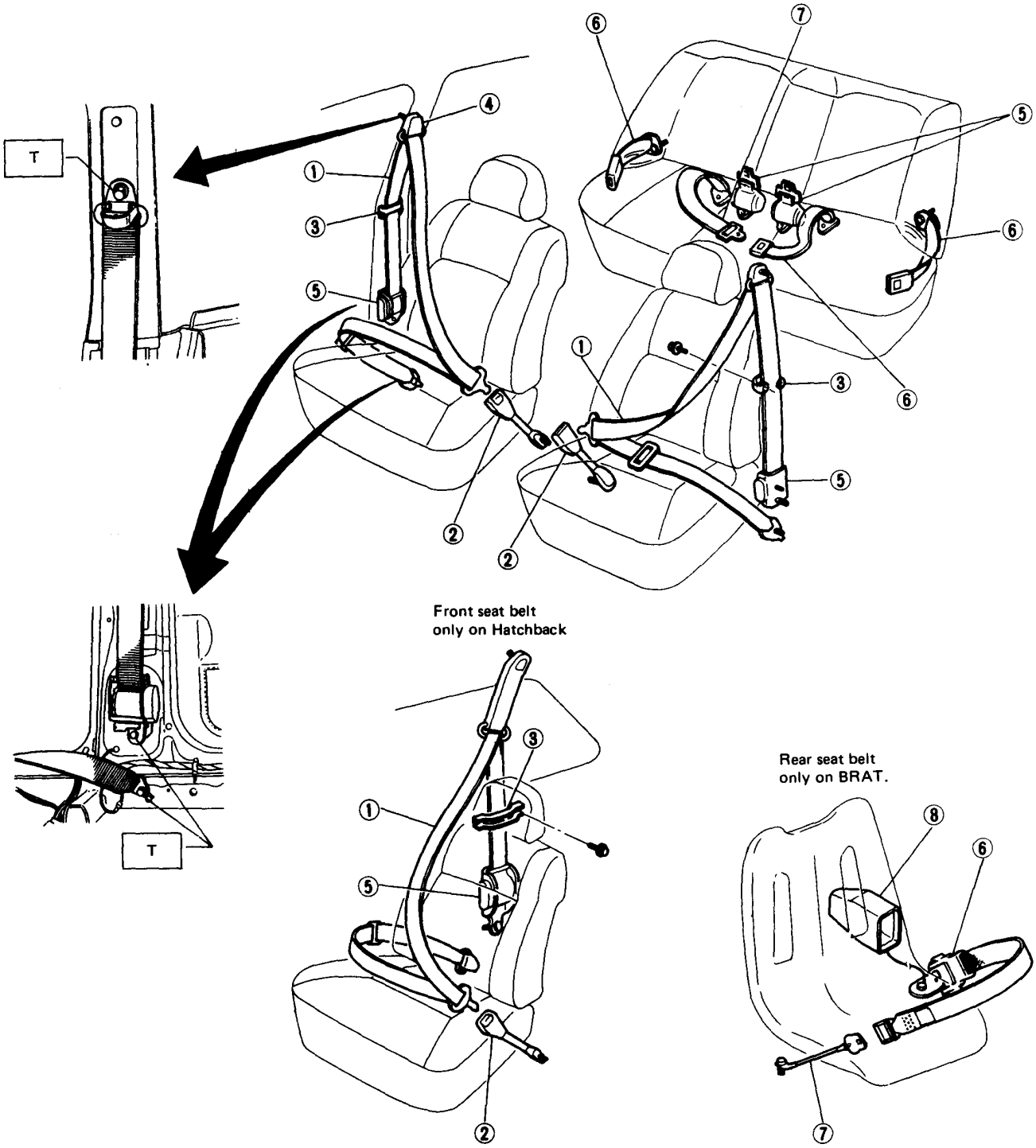

Tightening torque N·m (kg-m, ft-lb)
T: 25 – 34 (2.5 – 3.5, 18 – 25)

1 Front seat outer belt ASSY
2 Front seat inner belt ASSY
3 Webbing guide
4 Seat belt anchor cover
5 Belt retractor
6 Rear seat outer belt ASSY
7 Rear seat inner belt ASSY
8 Cover

Fig. 14-187 Component parts of seat belts

A24-800

Downloaded from www.Manualslib.com manuals search engine

- **Front**

1) Removal

1) Remove rear cushion, rear back rest, side sill cover, rear pillar trim panel and/or rear quarter trim panel as the occasion demands.
2) Remove outer belt as follows:
a. Lap belt anchor bolt
b. Shoulder anchor bolt
c. Felt guide
d. Retractor bolt
3) Remove inner belt anchor bolt, disconnect seat belt switch connector, and then take out inner belt.

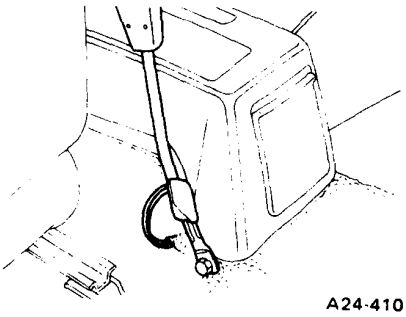

Fig. 14-188 Removing inner belt

NOTE:
a. Exercise utmost care to remove the anchor bolt together with spacer, washer, etc.
b. Never disassemble the ELR.
c. Use spanner size of 5/8 inch, since bolts size of 7/16 inch are used.

2) Installation

Installation can be carried out in the reverse order of removal.

Torque (anchor bolt)	25 – 34 N·m (2.5 – 3.5 kg-m, 18 – 25 ft-lb)

NOTE:
a. Although left and right ELRs have the same appearance, they are not interchangeable each other since each has a different type of sensor. They are interchangeable on Hardtop models, however.
b. When installing belt, be careful not to twist it.

- **Rear**

1) Remove the following parts.
a. Rear seat cushion
b. Outer anchor bolt
c. Inner anchor bolt
2) Installation should be carried out in the reverse order of removal.

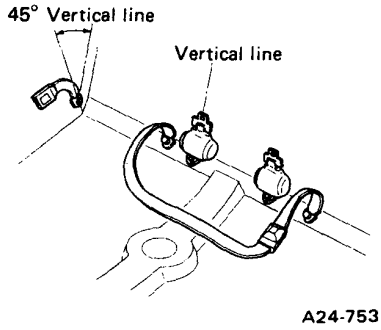

Fig. 14-189 Rear seat belt installation

14-8. Inner Accessories

1. Radio Box

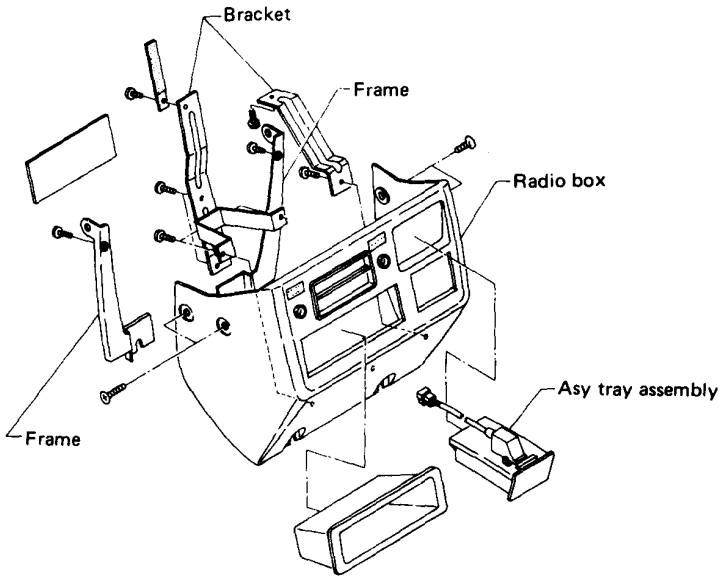

Fig. 14-190

1) For 4WD models, loosen cord of 4WD selector boot, and remove tray from selector lever.
2) Remove hand brake cover from hand brake lever.
3) Loosen cord of shifter lever boot, and remove center shelf.
4) Remove two mounting screws at the bottom.
5) After removing four mounting screws at the left and right sides of radio box, pull out radio box, and disconnect wiring harnesses.
6) Place radio box at its proper position, connect wiring harnesses, and then install radio box in the reverse order of removal.

NOTE:
Removal and installation of center shelf should be carried out with gear shifter at neutral, 4WD selector at 4WD position and hand brake lever fully pulled.

Downloaded from www.Manualslib.com manuals search engine

2. Console Box and Parking (Hand) Brake Cover

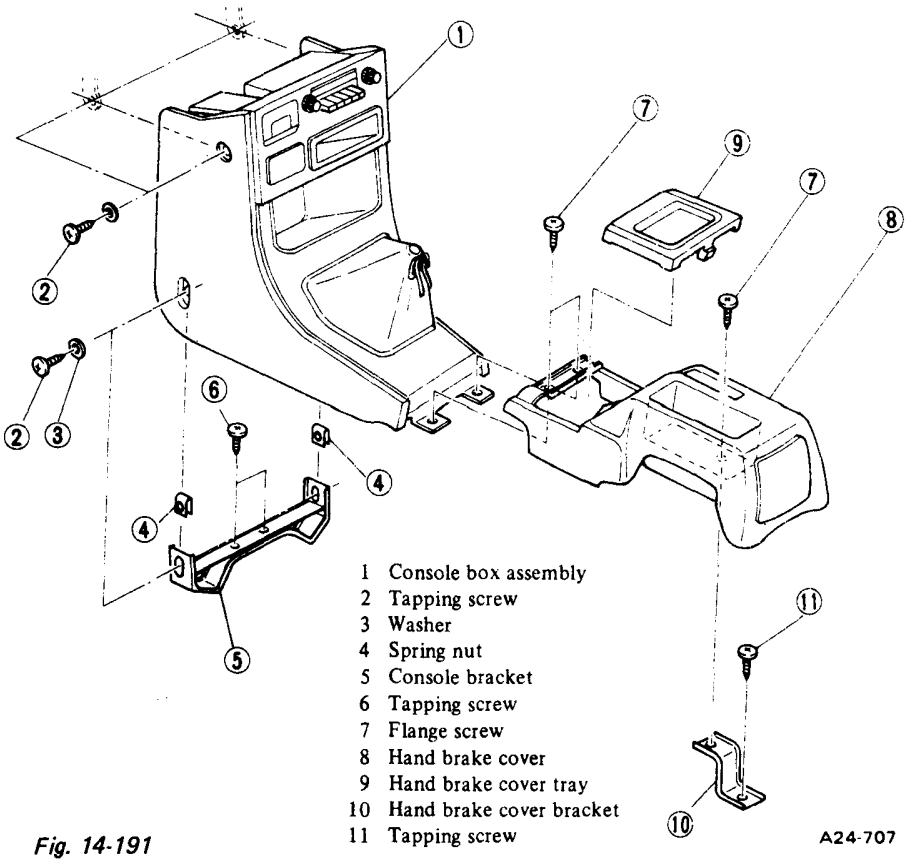

Fig. 14-191

1) Remove the tray of hand brake cover by disengaging the hook at the rear of the tray with finger inserted through the opening for hand brake lever on the hand brake cover.
2) Remove two tapping screws fixing both console box and hand brake cover to the floor.
3) Replace console box by removing 4 tapping screws and the following items.
a. Connect electric connector for radio.
b. Be careful not to catch electric wiring with console box.
c. For automatic transmission vehicles, also remove and install indicator cover.
4) Replace parking (hand) brake cover by removing tapping screw in pocket.

NOTE:
Make proper alignment of hand brake cover with hand brake lever when installing.

3. Inner Rear View Mirror

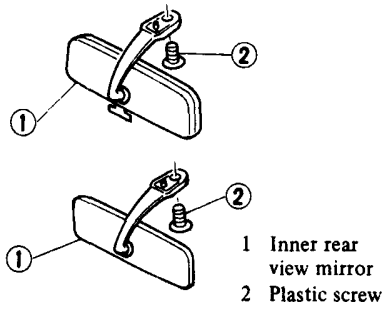

Fig. 14-192

Replacement of inner rear view mirror can be carried out by removing plastic screw.

Torque	1.0 – 1.4 N·m (0.10 – 0.14 kg-m, 0.7 – 1.0 ft-lb)

NOTE:
a. Pay attention not to damage the crisscross groove of the screw head and thread portion.
b. Use genuine plastic screw only for inner rear view mirror.

4. Luggage Shelf

Front luggage shelf

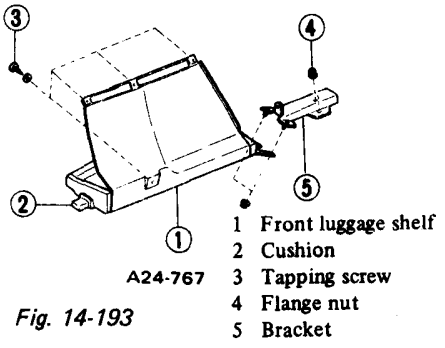

Fig. 14-193

Replacement of front luggage shelf can be carried out by removing clips and screws.

Rear luggage shelf

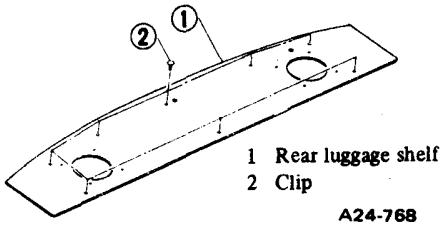

Fig. 14-194

1) Remove rear seat cushion and back rest.
2) Remove caps and shoulder belt anchors on both sides. (for Hardtop only)
3) Remove assist rail on rear pillar. (for Hardtop only)
4) Remove rear pillar trim panel.
5) Remove speakers if provided.
6) Replace rear luggage shelf by detaching eight clips.

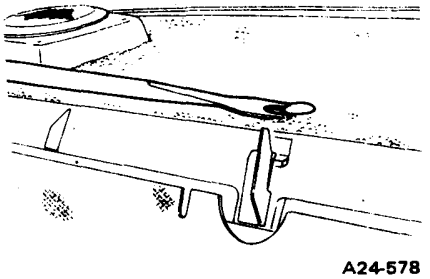

Fig. 14-195

Downloaded from www.Manualslib.com manuals search engine

5. Luggage Area Cover

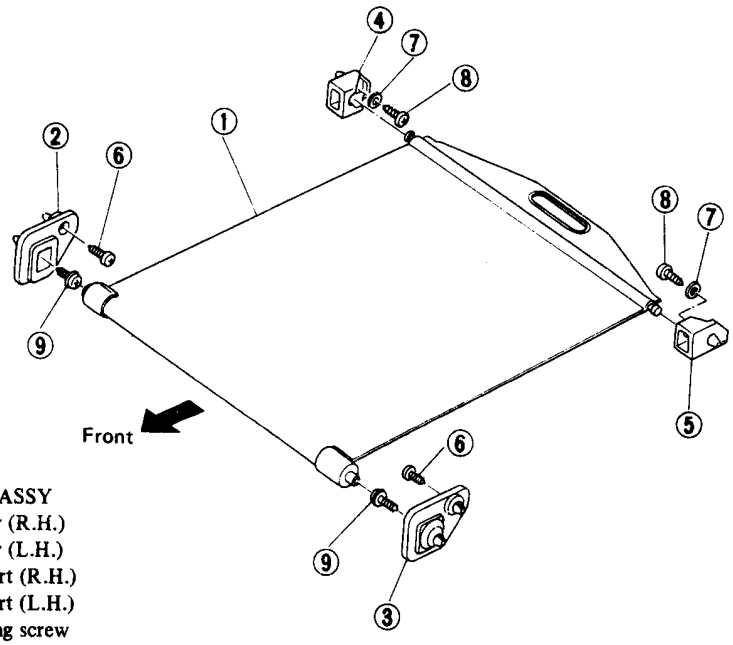

1 Cover ASSY
2 Holder (R.H.)
3 Holder (L.H.)
4 Support (R.H.)
5 Support (L.H.)
6 Tapping screw
7 Washer
8 Tapping screw
9 Flange screw

Fig. 14-196

Luggage area cover assembly is composed of cases (L.H. and R.H.), a clutch in case (L.H.), shaft (1) and (2), spring (1) and (2), a pipe and vinyl leather. One end of the vinyl leather is fastened to the pipe with adhesive agent, and another end has a handle to pull and spread the vinyl leather. When the cover assembly is not in use, it also can be detached from the holders.

1 Case (L.H.)
2 Clutch
3 Shaft (1)
4 Spring (1)
5 Pipe
6 Shaft (2)
7 Spring (2)
8 Case (R.H.)

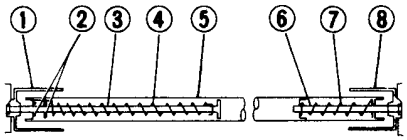

Fig. 14-197

In the following condition, case (L.H.) will idle and vinyl leather cannot be retracted.

a. When the cover assembly is detached from holders with the vinyl leather spread,
b. and the vinyl leather comes off the cut of the case (L.H.),
c. moreover, the case (L.H.) is pressed to slippery surface of floor or wall.

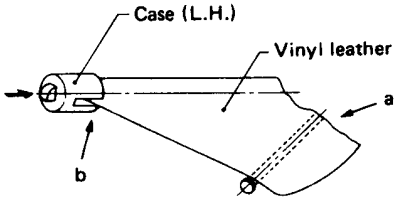

Fig. 14-198

In the above case, repair the cover assembly to restore the vinyl leather as follows:

1) While pushing and holding both sides of cases inside, roll up the vinyl leather until approx. 200 mm (7.87 in) remaining as shown in the illustration.

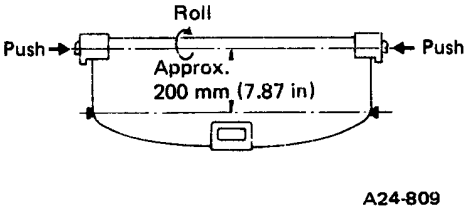

Fig. 14-199

2) Pull the vinyl leather as shown in the following illustration, and press the case (L.H.) against the slippery surface of floor or wall to idle the case (L.H.).

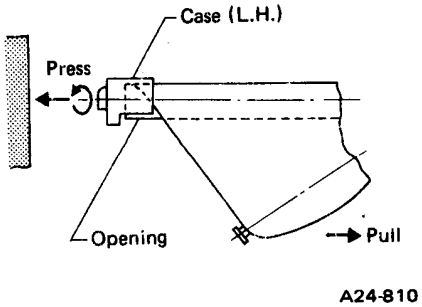

Fig. 14-200

3) Turn the case (L.H.) for eight (8) complete turns to rolling direction of the vinyl leather while pushing the case (L.H.) inside.

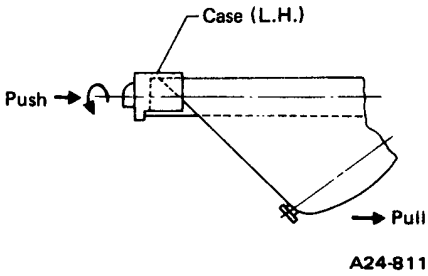

Fig. 14-201

4) Then, spread and roll up the vinyl leather by turns several times while pushing and holding the both sides of cases inside.

Downloaded from www.Manualslib.com manuals search engine

6. Roof Trim

1) Detach trim, weatherstrip clips, etc. as necessary.
a. Front pillar (upper) trim
b. Center pillar upper trim
c. Rear pillar lower trim after removing rear seat back rest
d. Rear pillar upper trim
e. Roof side rail trim
f. Rear rail
g. (Hatchback) Weatherstrip only at upper edge of side window

NOTE:
Almost all trim is fixed with plastic clips. Remove clips with Puller 92558-0000.

3) Detach inner rear view mirror, sun visor, sun visor hook, assist rail, room lamp, etc.
3) (Sedan and Hardtop) Remove front windshield glass. (Others) Pull out front edge of roof trim from lip of windshield weatherstrip.
4) Take out roof trim through front opening (front windshield) or rear gate or front door opening.

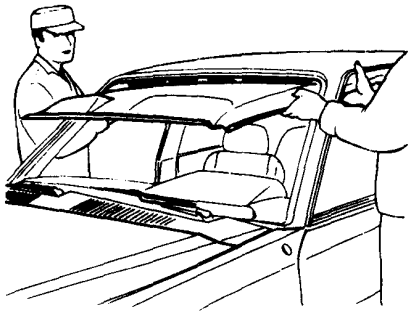

Fig. 14-202 Taking out roof trim

5) Installation can be carried out in the reverse order of removal.

Torque Rear view mirror screw	1.0 – 1.4 N·m (0.1 – 0.14 kg-m, 0.7 – 1.0 ft-lb)

NOTE:
Pay careful attention not to catch trim on electrical wiring.

7. Side Sill Cover

1) (Sedan and Station Wagon) Detach rear seat cushion.
2) (Vehicle with trunk opener) Pull knob out of opener lever.
3) Remove hinge cover of front seat.
4) Remove screws, and detach (front and rear) side sill cover.

NOTE:
Slide front seat appropriately to perform this job.

5) Installation can be carried out in the reverse order of removal, paying attention to the following.
a. Be careful not to catch it on electrical wiring or come in contact with clips of wirings, piping, etc.
b. Make proper alignment of front, rear and center pillar trim.
c. Use stepped tapping screws except for the extreme rear end of (rear) side sill cover where an ordinary tapping screw and a washer are fitted. Be sure to use plain washer, otherwise the screw might sink too far.

Downloaded from www.Manualslib.com manuals search engine

14-9. Sunroof (Option)

1. Sedan and Hardtop

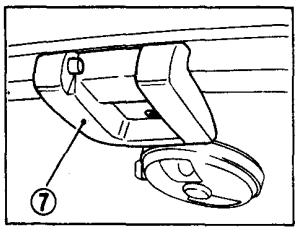

View "A"

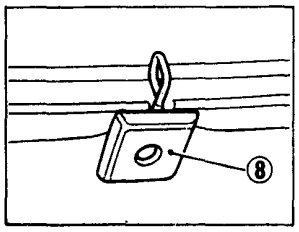

View "B"

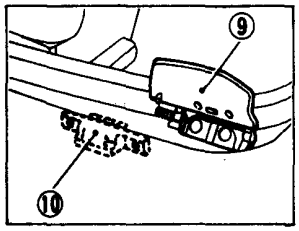

View "C"

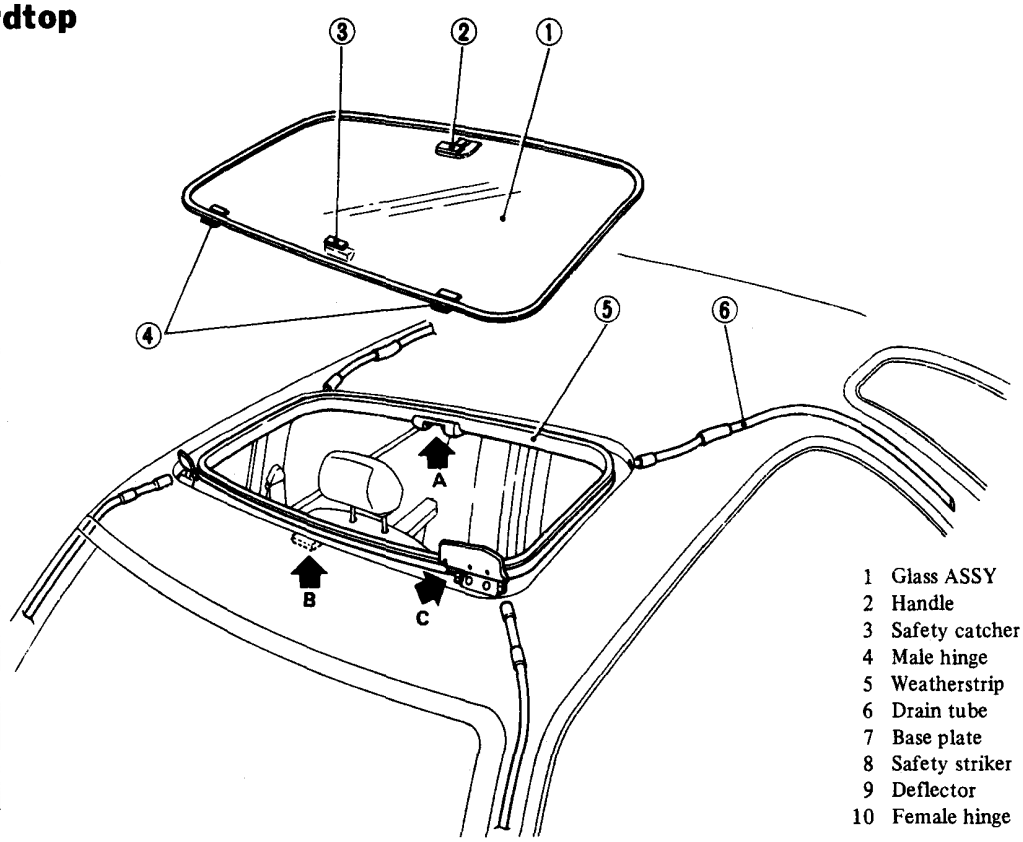

1 Glass ASSY
2 Handle
3 Safety catcher
4 Male hinge
5 Weatherstrip
6 Drain tube
7 Base plate
8 Safety striker
9 Deflector
10 Female hinge

A24-802

Fig. 14-203

Removal of Glass

1) Move handle down and then up, and tilt (pop) up glass.
2) Remove handle from base plate.

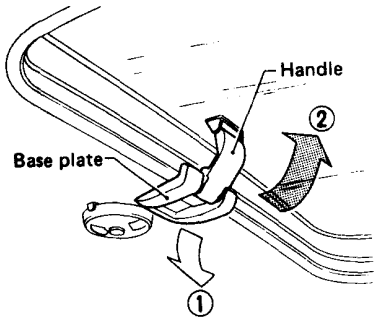

Fig. 14-204 A24-803

3) Slide safety catcher knob to release safety lock.

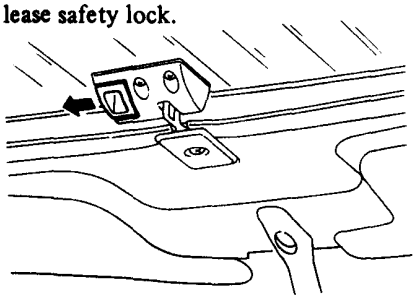

Fig. 14-205 A24-733

4) Remove male hinge from female hinge while lifting glass.
The glass should be detached along the arc shape of male hinge.
5) Place glass into a suitable bag and store in trunk room.
6) When installing glass, press on deflector with glass.
Observe the following precautions during installation:

a. Ensure that weatherstrip is installed properly. If it is rolled in or caught by the car body, raise weatherstrip.
b. Be careful not to strike male hinge against the car body.
c. Ensure that safety lock and handle lock operate properly.

Repair of Drain Tubes

1) Front drain tube

a. Remove roof trim and side rail trims.
b. Remove drain tube on the side of the roof, then pull it out of the roof.
c. Insert a (new) tube into the pillar from the side of the roof, then secure it to the roof.
d. Remove lower pillar trim, then insert tube into the hole of separator.

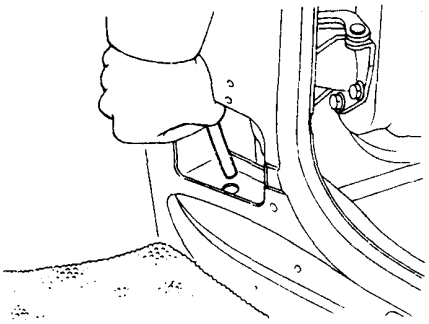

Fig. 14-206 A24-734

e. Install all trims in their original positions.

2) Rear drain tube

a. Remove roof trim.
b. Remove drain tube on the roof, then pull it out of the roof.
c. Insert a (new) tube into place from the roof side.
d. Remove trims from around rear quarter window to ensure that the tube can be seen.

Downloaded from www.Manualslib.com manuals search engine

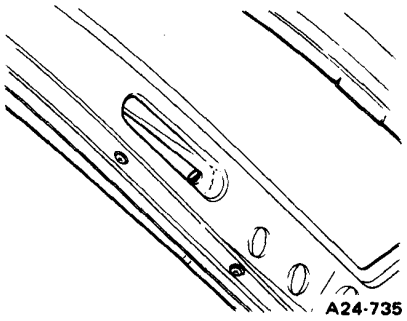

Fig. 14-207

2. BRAT

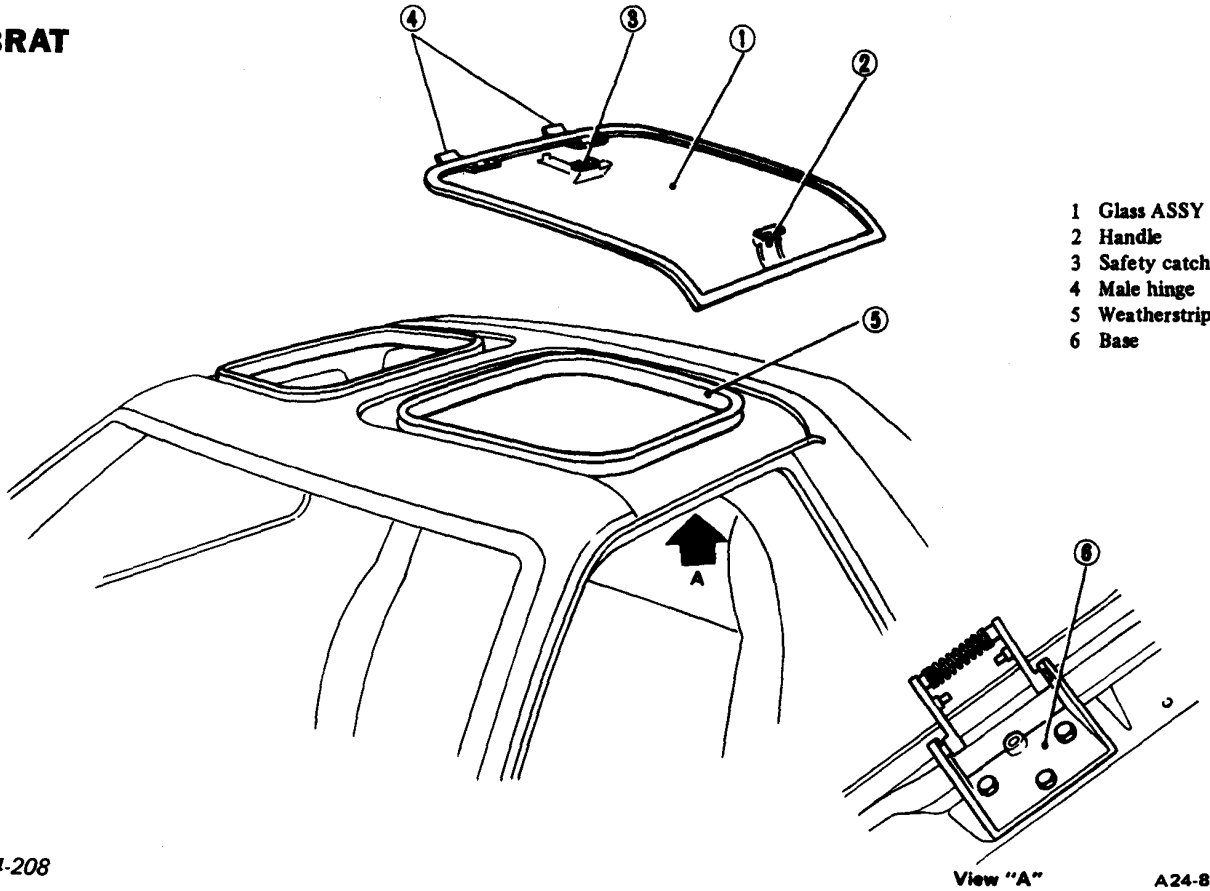

1 Glass ASSY
2 Handle
3 Safety catcher
4 Male hinge
5 Weatherstrip
6 Base

Fig. 14-208

Removal of Glass

1) Move handle down and then up, and tilt (pop) up glass.

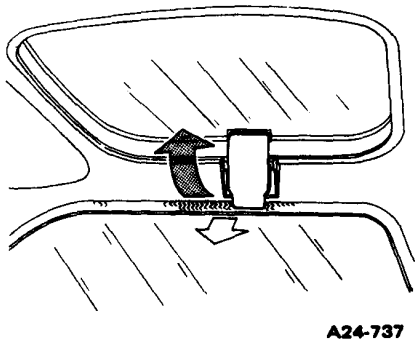

Fig. 14-209

2) Remove handle from base plate while pressing on the link of handle at the spring location.

3) Slide safety catcher knob to release safety lock.

4) Remove male hinge from female hinge while lifting glass.

The glass should be detached along the arc shape of male hinge.

5) Install glass with handle facing up, then insert male hinge into its groove on the lower portion of the back panel. Securely fasten the glass with the holddown band.

6) Observe the following precautions during installation:

a. Be careful not to strike male hinge against the car body.

b. Ensure that safety lock and handle lock operate properly.

Downloaded from www.Manualslib.com manuals search engine

14-10. Special Tools

925580000	925610000		
Puller	Wrench		
Trim Clip	Door Hinge		
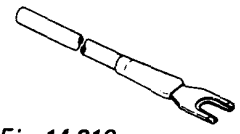 *Fig. 14-210* ST-035	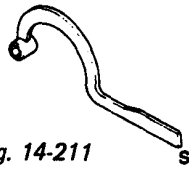 *Fig. 14-211* ST-166		

Downloaded from www.Manualslib.com manuals search engine

CHAPTER 15

ELECTRICAL SYSTEM

		Page
15– 1.	SPECIFICATIONS AND SERVICE DATA	15– 2
15– 2.	BATTERY, FUSE AND FUSIBLE LINK	15– 9
15– 3.	STARTER	15– 13
15– 4.	ALTERNATOR	15– 23
15– 5.	DISTRIBUTOR	15– 29
15– 6.	IGNITION COIL AND SPARK PLUG	15– 35
15– 7.	COMBINATION METER	15– 37
15– 8.	SWITCHES	15– 56
15– 9.	LIGHTS	15– 59
15–10.	WIPER AND WASHER	15– 65
15–11.	ELECTRICAL EQUIPMENT	15– 72
15–12.	ELECTRICAL WIRING HARNESS	15– 90
15–13.	WIRING DIAGRAM AND TROUBLESHOOTING	15–108

SUBARU

Downloaded from www.Manualslib.com manuals search engine

15-1. Specifications and Service Data

1. Specifications

Item			Designation
Battery	Type		MT: 55D23R (MF), AT: 65D23R (MF) or 75D26R (MF)
	Capacity	Reserve capacity	MT: 90 minutes, AT: 100 minutes
		Cold cranking ampere	MT: 310 ampere, AT: 370 ampere or 450 ampere
Starter	Type		*1: Magnetic switch type, *2 and *3: Reduction type
	Model		*1: 028000–6520, *2: 028000–8580, *3: 028000–8570
	Manufacturer		Nippondenso
	Voltage and Output		*1: 12V–0.8kW, *2: 12V–1.0kW, *3: 12V–1.4kW
	Direction of rotation		Counterclockwise (when observed from pinion)
	Number of pinion teeth		9
	No-load characteristics	Voltage	*1: 11V, *2 and *3: 11.5V
		Current	*1: 50A or less, *2 and *3: 90A or less
		Rotating speed	*1: 5,000 rpm or more, *2: 3,000 rpm or more, *3: 4,100 rpm or more
	Load characteristics	Voltage	*1: 9.5V, *2: 8V, *3: 8.5V
		Current	*1: 270A or less, *2: 230A or less, *3: 350A or less
		Torque	*1: 7 N·m (0.7 kg-m, 5.1 ft-lb), *2: 6.4 N·m (0.65 kg-m, 4.7 ft-lb), *3: 13.2 N·m (1.35 kg-m, 9.8 ft-lb)
	Lock characteristics	Rotating speed	*1: 1,200 rpm or more, *2: 1,180 rpm or more, *3: 1,000 rpm or more
		Voltage	*1: 7.7V, *2: 2.5V, *3: 2.4V
		Current	*1: 600A or less, *2: 300A or less, *3: 400A or less
		Torque	*1: 13 N·m (1.3 kg-m, 9 ft-lb) or more, *2: 7 N·m (0.7 kg-m, 5.1 ft-lb) or more, *3: 11 N·m (1.1 kg-m, 8.0 ft-lb) or more
Alternator	Type		Rotating-field three-phase type, Voltage regulator built-in type
	Model		LR155-15C
	Regulator type		TR1Z-56 (IC)
	Manufacturer		Hitachi
	Voltage and Output		12V–55A
	Polarity on ground side		Negative
	Rotating direction		Clockwise (when observed from pulley side)
	Armature connection		3-phase Y-type
	Rectifying system		Full wave rectification by six self-contained silicone diodes

*1: SUBARU 1600, *2: SUBARU 1800 MT, *3: SUBARU 1800 AT (including 4WD AT)

Downloaded from www.Manualslib.com manuals search engine

Item			Designation
Alternator	Revolution speed at 13.5V; 20°C (68°F)		900 rpm or less
	Output current		1,250 rpm – 20A or more 2,500 rpm – 50A or more 5,000 rpm – 55A or more
	Regulated voltage		14.5 ± 0.3V [20°C (68°F)]
Distributor	Type		Breakerless type with control unit Centrifugal governor and vacuum diaphragm advancers
	Model		4WD: D4R80-03, Others (including 4WD-AT): 100291-0080
	Manufacturer		4WD: Hitachi, Others (including 4WD-AT): Nippondenso
	Firing order		1–3–2–4
	Rotating direction		Counterclockwise (when observed from cap side)
	Air gap	mm (in)	except 4WD: 0.2 – 0.4 (0.008 – 0.016) 4WD: 0.3 – 0.5 (0.012 – 0.020)
	Cap insulation resistance	MΩ	More than 50
	Rotor head insulation resistance	MΩ	More than 50
	Ignition interval		90°
	Series resistance of pick-up coil	Ω	4WD: CIT-79, Others (including 4WD-AT): K-31
Ignition Coil	Type		except 4WD: K-31, 4WD: CIT-63
	Manufacturer		except 4WD: NIPPONDENSO, 4WD: HITACHI
	Primary coil resistance	Ω	except 4WD: 1.13 – 1.38, 4WD: 1.04 – 1.27
	Secondary coil resistance	Ω	except 4WD: 10,795 – 14,605, 4WD: 7,360 – 11,040
	Insulation resistance between primary terminal and case		More than 10 MΩ
Spark Plug	Type and Manufacturer		For USA { BPR6ES-11 (or BPR5ES-11, BPR7ES-11) ..... NGK W20EPR-U11 (or W16EPR-U11, W22EPR-U11) .... Nippondenso RN11YC-4 (or RN9YC-4) ..... Champion For Canada: RN11YC-4 (or RN9YC-4) ..... Champion
	Thread size	mm	14, P = 1.25
	Spark gap	mm (in)	1.0 – 1.1 (0.039 – 0.043)
Fuses			10A – 6, 15A – 8, 20A – 2
Combination meter	Speedometer		Eddy current type
	Temperature gauge		Thermister-bimetal type
	Fuel gauge		Resistor-cross coil type (GL model), Resistor-bimetal type (STD & DL models)
	Low fuel indicator light	Bulb	12V-3.4W (GL model only)
		Switch position	On fuel tank (GL model only)
	Charge indicator light		12V-1.4W or 3.4W
	Oil pressure indicator light		12V-1.4W (except GL model)

Downloaded from www.Manualslib.com manuals search engine

Item			Designation
Combination meter	High beam indicator light		12V-1.4W
	Brake fluid level warning light	Bulb	12V-1.4W
		Switch position	On brake fluid reservoir tank cap
	Door ajar warning light	Bulb	2-door Hatchback (except STD) Hardtop and BRAT: 12V-1.4W x 2 4-door Sedan and Station Wagon: 12V-1.4W x 4
		Switch position	On side sill (except 2-door Hatchback STD)
	Seat belt warning light	Bulb	12V-1.4W
		Switch position	On seat belt backle
	Rear gate ajar warning light	Bulb	12V-1.4W [Hatchback (except STD & 4WD STD) and Station Wagon]
		Switch position	In rear gate latch [Hatchback (except STD & 4WD STD) and Station Wagon]
	Stop light warning light	Bulb	12V-1.4W
		Checker position	In trunk room or rear combination light
	Parking brake warning light	Bulb	12V-1.4W
		Switch position	On parking brake lever
	Four wheel drive indicator light	Bulb	4WD: 12V-3.4W or 1.4W (4WD vehicles), LO: 12V-1.4W (Dual-range only)
		Switch position	4WD: On transmission (4WD vehicles) or on drive selector (Dual-range) LO: On transmission (Dual-range only)
	Tachometer		Electric impulse type (GL model only)
	Oil pressure gauge		Bimetal-bimetal type (GL model only)
	Voltmeter		Cross coil type (GL model only)
	Clock		Digital type (GL model only)
	Turn signal indicator light		12V-1.4W x 2 or 12V-3.4W x 2
Meter illumination light		Bulb	GL model: 12V-3.4W x 5, 12V-1.4W x 3 Other models: 12V-3.4W x 5
		Switch position	In lighting switch
Ignition-starter switch		The following circuits are closed through terminals of ignition-starter switch.	
		"ACC" terminal	Radio, Heater blower motor, Wiper and washer (front & rear) (auto-stop), Cigarette lighter, Radiator cooling fan, Remote controlled rear view mirror
		"IG" terminal	Ignition coil, Anti-dieseling solenoid, Gauge and warning, Door ajar warning light, Fuel pump, Kick-down solenoid, Kick-down relay, Timer, Cruise control, Back-up light, Turn Hazard unit, 4WD-AT solenoid, Power window relay, Rear defogger, Automatic choke, Lighting relay
		"ST" terminal	Starter
Illumination intensity control switch			Rheostat type
Dimmer		High beam	STD: 12V-60W, DL: 12V-65W, GL: 12V-65W (4WD) or 12V-50W + 35W
		Low beam	STD: 12V-50W, DL: 12V-55W, GL: 12V-55W (4WD) or 12V-35W
		Switch position	In combination switch

Downloaded from www.Manualslib.com manuals search engine

Item				Designation
Hazard warning light		Light position		Front and rear turn signal lights are flashed.
		Switch position		On steering column
Hazard warning unit				When hazard warning unit is operated, all front and rear turn signal lights and indicator lights flash at the same time.
Turn signal unit				When turn signal unit is operated, front and rear turn signal lights and indicator light flash on turning side.
Combination switch				Turn signal, headlight dimmer (headlight flasher) and hazard warning light switches are combined.
Automatic transmission kickdown switch				On accelerator pedal of automatic transmission vehicle
Headlight		Wattage		STD: 12V-60/50W, DL: 12V-65/55W, GL: 12V-50W + 35/35W (Halogen)
		Switch position		On left side of control wing
Front combination light	Turn signal light	Bulb		12V-27W
		Switch position		In combination switch
	Parking light	Bulb		12V-3.8W or 8W
		Switch position		In lighting switch
Side reflex reflector & marker light		Bulb	Front	12V-3.8W
			Rear	Hatchback, Sedan and Hardtop: 12V-3.8W, Other models: (12V-8W)
		Switch position		In lighting switch
Rear combination light	Stop and tail light	Bulb		12V-27/8W
		Switch position	Stop light	On brake pedal bracket
			Tail	In lighting switch
	Turn signal light	Bulb		12V-27W
		Switch position		In combination switch
	Back-up light	Bulb		12V-27W
		Switch position		Automatic transmission: Combined together with the inhibitor switch which is installed at under side of selector lever. Manual transmission: On rear cover of transmission
License plate light		Bulb		12V-3.8W or 8W
		Switch position		In lighting switch
Room light		Bulb		12V-8W
		Switch position		Beside room light
		Door ajar warning light		Room light also serves as a door ajar warning light
Front ash tray illumination light				12V-1.4W
Automatic transmission selector position indicator		Illumination light		12V-3.4W
		Switch position		In lighting switch

Downloaded from www.Manualslib.com manuals search engine

Item		Designation
Windshield wiper	Motor speed	GL models: 2-speed with intermittent operation Other models: 2-speed
	Input	12V-50W or less
	Switch position	On right side of control wing
Windshield washer	Pump type	Centrifugal
	Input	12V-35W or less
	Switch position	In windshield wiper switch
Rear window wiper	Motor speed	1-speed
	Input	12V-30W
	Switch position	In windshield wiper switch
Rear window washer	Pump type	Centrifugal
	Input	12V-35W
	Switch position	In windshield wiper switch
Radio (except Hatchback STD & 4WD STD)	Type	AM/FM Mono, AM/FM Stereo
		Push-button station selection
	Switch position	On radio set
	Main switch position	In ignition-starter switch
	Illumination light	(Variable illumination intensity type)
	Speaker position	Upper panel of instrument panel (GL model only) Rear luggage shelf – Sedan and Hardtop Rear quarter trims – Hatchback Rear doors – Station Wagon Front doors – BRAT
Horn	Type	2-door Hatchback STD & 4WD STD: 12V-390 Hz Other models: 12V-420 Hz, 12V-350 Hz
	Switch position	On steering wheel
Cigarette lighter (except Hatchback STD & 4WD STD)	Input	12V-120W
	Illumination light	(12V-1.4W × 2)
Rear window defogger (except Hatchback STD & 4WD STD)	Input	12V-110W
	Switch position	On heater and ventilator control panel
	Indicator light	12V-1.4W × 2
Vanity mirror light (GL model only)		12V-3.4W
Trunk room light (Sedan GL and Hardtop GL)	Bulb	12V-5W
	Switch position	On rear panel

Downloaded from www.Manualslib.com manuals search engine

Item		Designation
Seat belt & key warning chime	Chime	In instrument panel (on right side; behind glove box)
	Timer	Under instrument panel on driver's side
Power window (Option)	Rated voltage	12V
	Rated current	7A or less
	Rated revolutions	55 rpm
	Rated load	2.4 N·m (24 kg-cm, 21 in-lb)
	Stalling current	18A or less
	Stalling torque	8.3 N·m (85 kg-cm, 74 in-lb)
	Working voltage	10V – 15V
	Working temperature	–25 – 80°C (–13 – 176°F)
	Raising or lowering time	Approx. 3.5 seconds (varies depending on ambient temperature, working voltage and type of glass)
	Excess raising force	Approx. 196 N (20 kg, 44 lb) (varies depending on ambient temperature, working voltage and type of glass)
Heater fan	Motor type	Electromagnetic type
	Input	12V-160W or less
	Switch position	On heater and ventilator control panel
Cooling fan	Motor type	Electromagnetic type
	Input	12V-120W or less
	Switch position	On radiator
Fuel pump	Input	12V-9.6W or less
	Switch position	In ignition-starter switch

Downloaded from www.Manualslib.com manuals search engine

2. Service Data of Distributor

Unit: mm (in)

No.	Item	Specifications	
		4WD	All models except 4WD
1	Air gap	0.3 – 0.5 (0.012 – 0.020)	0.2 – 0.4 (0.008 – 0.016)
2	Shaft diameter (Lower side)	12.43 – 12.44 (0.4894 – 0.4898)	——
3	Housing hole diameter	12.450 – 12.468 (0.4902 – 0.4909)	——
4	Clearance between shaft and housing	0.010 – 0.038 (0.0004 – 0.0015)	——
5	Maximum clearance between shaft and housing (Correction limit)	0.06 (0.0024)	——
6	Shaft diameter (upper side)	7.986 – 7.995 (0.3144 – 0.3148)	——
7	Reluctor hole diameter	8.000 – 8.015 (0.3150 – 0.3156)	——
8	Clearance between shaft and reluctor	0.005 – 0.029 (0.0002 – 0.0011)	——
9	Weight support shaft diameter	4.958 - 4.965 (0.1952 - 0.1955)	——
10	Weight support shaft hole diameter	4.985 - 4.998 (0.1963 - 0.1968)	——
11	Clearance between weight support shaft and weight support shaft hole	0.020 - 0.040 (0.0008 - 0.0016)	——
12	Length of carbon point	12 (0.472)	12 (0.472)
13	Wear limit of carbon point	2.0 (0.079)	2.2 (0.087)

Downloaded from www.Manualslib.com manuals search engine

15-2. Battery, Fuse and Fusible Link

1. Battery

1) Removal & Installation

1) Disconnect the positive (+) terminal after disconnecting the negative (−) terminal of the battery.
2) Remove the flange nuts from the battery rods and take off the battery holder.
3) Remove the battery.
4) Installation should follow the removal procedure in the reverse order.

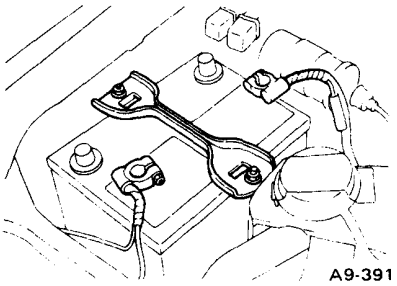

Fig. 15-1 Installing battery

NOTE:
a. Clean battery cable terminals and apply grease to retard the formation of corrosion.
b. Connect the positive (+) terminal of the battery and then the negative (−) terminal of the battery.

2) Inspection

1) External parts
Check for the existence of dirt or cracks on the battery case, top cover, vent plugs, and terminal posts. If necessary, clean with water and wipe with a dry cloth.
Apply a thin coat of grease on the terminal posts to prevent corrosion.
2) Electrolyte level
Check the electrolyte level in each cell. If the level is below MIN LEVEL, bring the level to MAX LEVEL by pouring distilled water into the battery cell. Do not fill beyond MAX LEVEL.

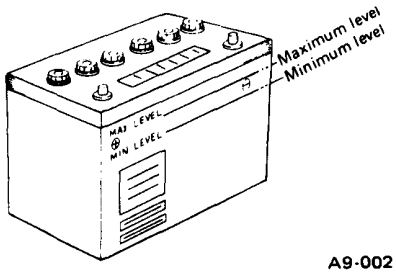

Fig. 15-2 Electrolyte level

NOTE:
a. Electrolyte has toxicity; be careful handling the fluid.
b. Avoid contact with skin, eyes or clothing. Especially at contact with eyes, blush with water for 15 minutes and get prompt medical attention.
c. Batteries produce explosive gasses. Keep sparks, flame, cigarettes away.
d. Ventilate when charging or using in enclosed space.

3) Specific gravity
Indicator is provided for checking the specific gravity and the battery condition.

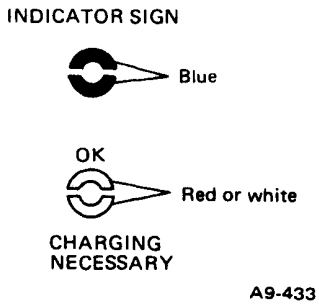

Fig. 15-3 Indicator sign

"OK"	:	Charged condition Specific gravity > 1.15
"Charging necessary"	:	The battery must be recharged when engine does not start. Specific gravity < 1.15

4) Voltage under high discharge
Charging (or discharging) the battery raises (or lowers) the voltage but after stopping the charging (or discharging) the voltage gradually varies and finally settles at about 2 volts per cell. Therefore, to check the real condition of the battery, it is necessary to measure the voltage with the battery under high discharge. A simple method is the use of a high-discharge battery tester.
Check that the individual cell voltages are more than 1.5 volts and the voltage differences between the cells are within 0.1 volt when the measurements are made for 5 seconds per cell.

3) Charging

Measuring the specific gravity of the electrolyte in the battery will disclose the state of charge of the battery. The relation between the specific gravity and the state of charge is as shown in figure.

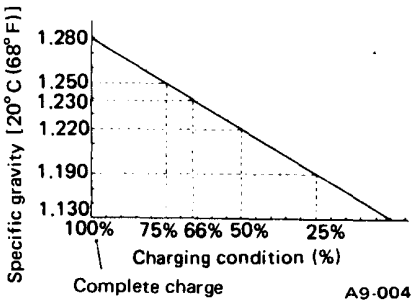

Fig. 15-4 Specific gravity and state of charge

1) Normal charging

NOTE:
a. Remove all the vent plugs since electrolyte generates gas toward the end of charging.
b. Do not bring an open flame close to the battery at this time.
c. Prior to charging, corroded terminals should be cleaned with a brush and common baking soda solution.

Downloaded from www.Manualslib.com manuals search engine

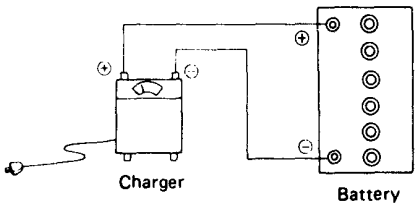

A9-005

Fig. 15-5 Charger-to-battery connection

The battery must be charged when indicator shows "charging necessary" and also engine does not start.
Perform charging for 5 hours or more with a constant current of 6A.
At the condition of full charged, the charging current is 0.5A or less.

2) Quick charging
Quick charging is a method in which the battery is charged in a short period of time with a relatively large current by using a quick charger.

Since a large current flow raises electrolyte temperature, the battery is subject to damage if the large current is used for prolonged time. For this reason, the quick charging must be carried out within a current range that will not increase the electrolyte temperature above 40°C (104°F).
It should be also remembered that the quick charging is a temporary means to bring battery voltage up to a fair value and, as a rule, a battery should be charged slowly with a low current.

NOTE:

a. Observe the items in NOTE in 1) Normal charging.

b. The battery should not be charged with 10A or more.

2. Fuse

The fuse box is located on the left side underneath of the instrument panel.
The connection between each fuse and main electrical units/devices is as shown in the following illustration. (Also refer to the wiring diagram at the end of this manual.)

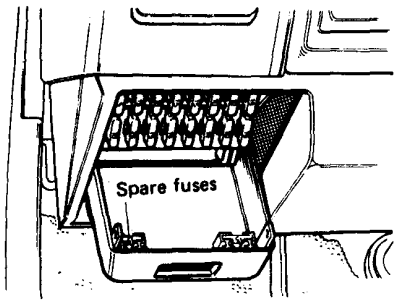

OM-867

Fig. 15-6 Fuse box

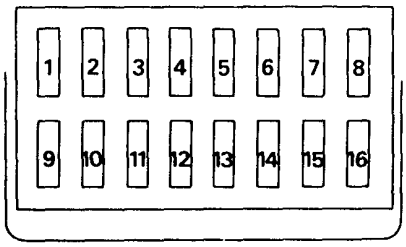

A25-549

Fig. 15-7 Fuse disposition

Downloaded from www.Manualslib.com manuals search engine

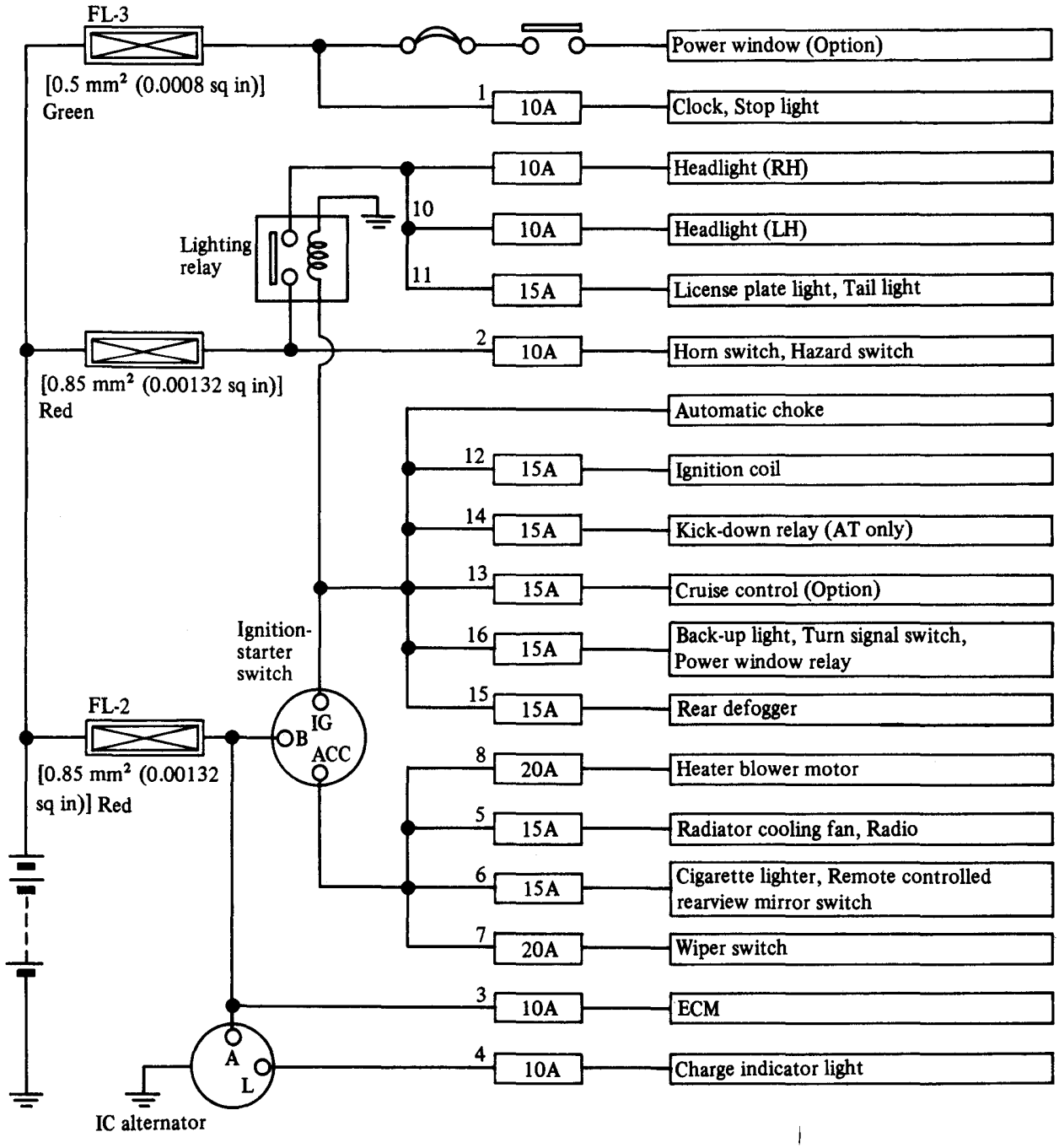

A25-759

Fig. 15-8

NOTE:

a. When replacing fuse, be sure to use fuse of specified rating.

b. If fuse is blown, be sure to eliminate cause before installing new fuse in position.

c. Poor contact of any fuse holder will often lead to voltage drop or heating in the circuit or fuse holder and could result in blown fuse, so be careful with holder contacting and clean metal parts if necessary.

Downloaded from www.Manualslib.com manuals search engine

3. Fusible Link

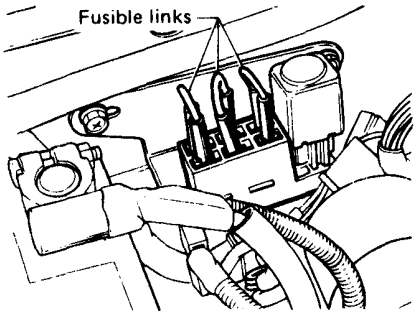

OM-1135

Fig. 15-9

If current increases beyond specified amperage, fusible metal melts and the circuit is broken, thus protecting cable and electrical equipment from burning.

No.	Item	Nominal gauge size of conductor	
		0.5 mm² (0.0008 sq in)	0.85 mm² (0.00132 sq in)
1	Voltage drop	70 mV	60 mV
		Voltage drop across lug terminals should be less than the above value when a 10-ampere current flows through fusible link at room temperature.	
2	Melting Characteristics	Fusible link should melt within 15 seconds at a current flow of 80 amperes.	Fusible link should melt within 15 seconds at a current flow of 130 amperes.

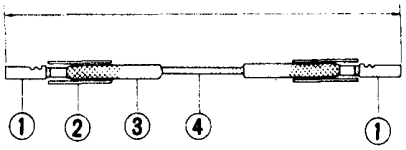

1 Terminal
2 Rubber tube
3 Glass tube
4 Core wire

A25-550

Designation	Appearance	Quantity per vehicle
0.5 mm² (0.0008 sq in)	Green	1
0.85 mm² (0.00132 sq in)	Red	2

Fig. 15-10 Construction of fusible link

CAUTION:

a. When replacing fusible link, be sure to use one with the specified rating.

b. Blown fusible link is caused by short circuit in the source of electricity circuit or large amperage circuit, so certain check of cause and/or repair is necessary.

Downloaded from www.Manualslib.com manuals search engine

15-3. Starter

1. Summary

- **Component Parts**

1) **SUBARU 1600**

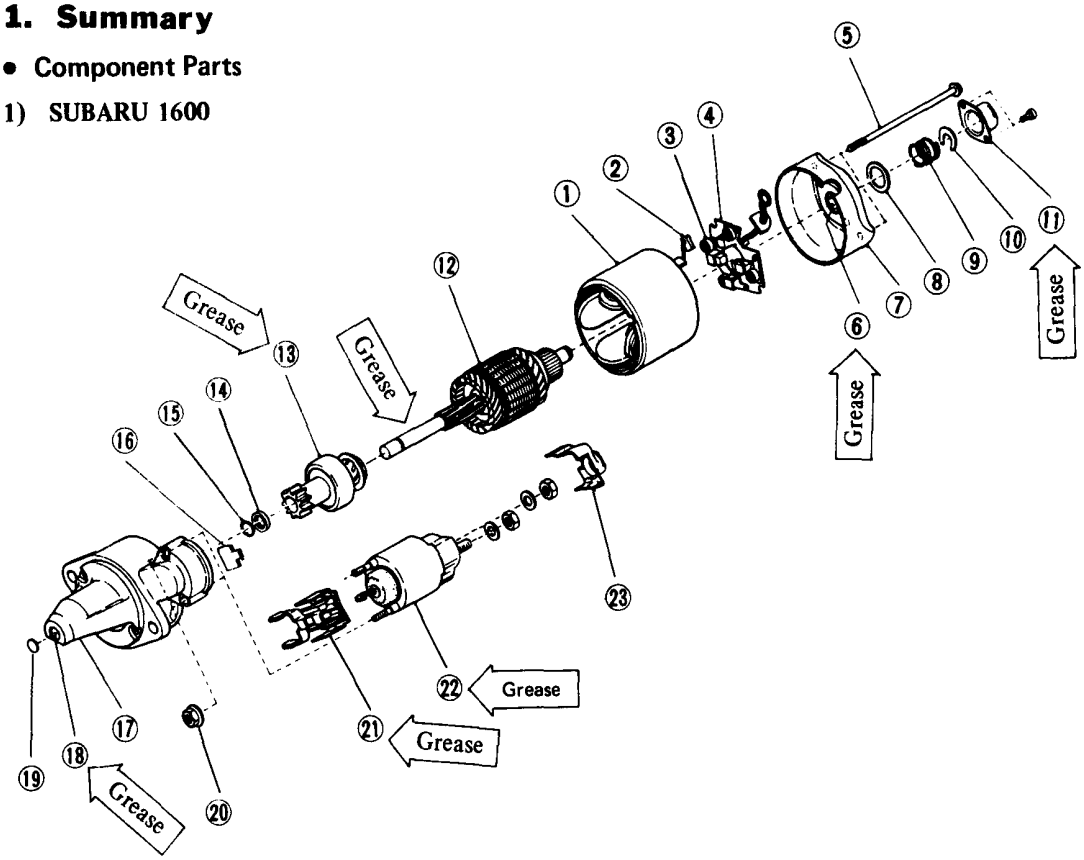

1 Yoke
2 Brush
3 Brush spring
4 Brush holder
5 Through bolt
6 Bushing
7 Frame
8 Seal
9 Spring
10 Lock plate
11 Cap
12 Armature
13 Overrunning clutch
14 Collar
15 Snap ring
16 Seal
17 Housing
18 Bushing
19 Cover
20 Nut
21 Lever
22 Magnet switch
23 Cover

A25–760

Fig. 15-11

2) **SUBARU 1800 MT vehicle**

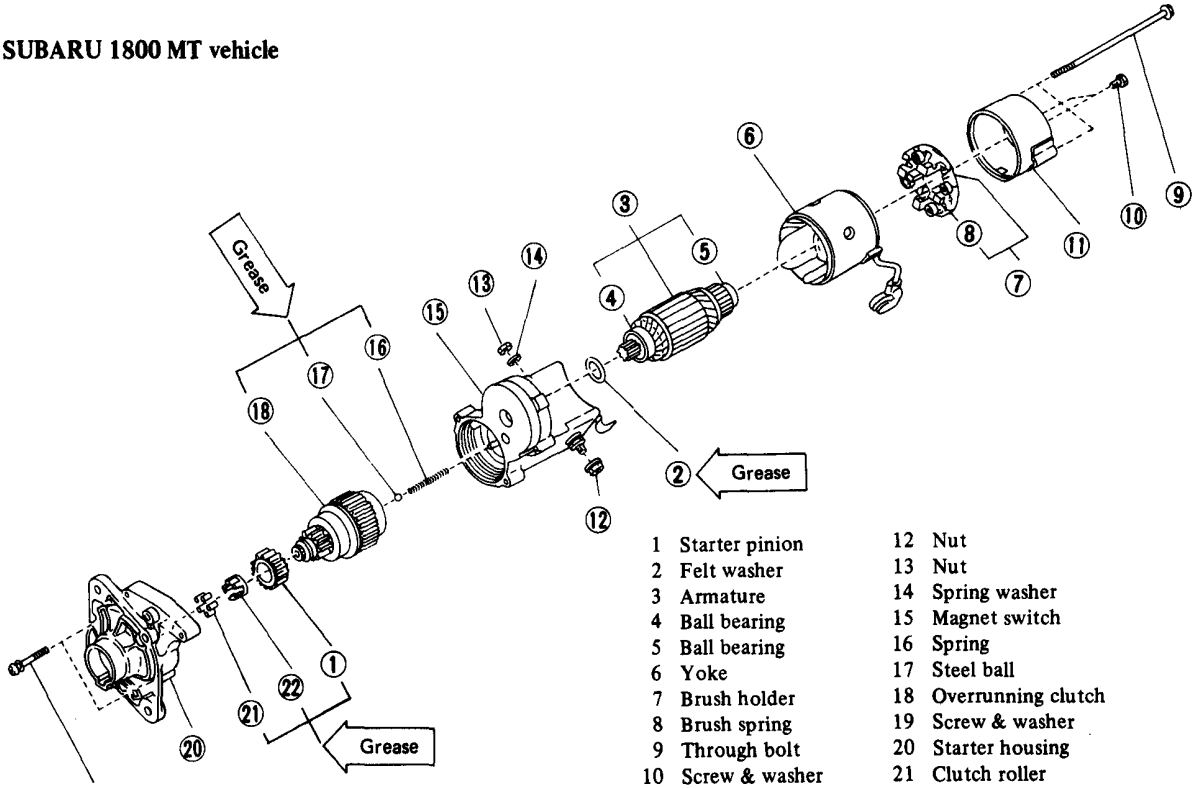

1 Starter pinion
2 Felt washer
3 Armature
4 Ball bearing
5 Ball bearing
6 Yoke
7 Brush holder
8 Brush spring
9 Through bolt
10 Screw & washer
11 Frame
12 Nut
13 Nut
14 Spring washer
15 Magnet switch
16 Spring
17 Steel ball
18 Overrunning clutch
19 Screw & washer
20 Starter housing
21 Clutch roller
22 Retainer

A25–761

Fig. 15-12

Downloaded from www.Manualslib.com manuals search engine

3) SUBARU 1800 AT vehicle (including 4WD-AT)

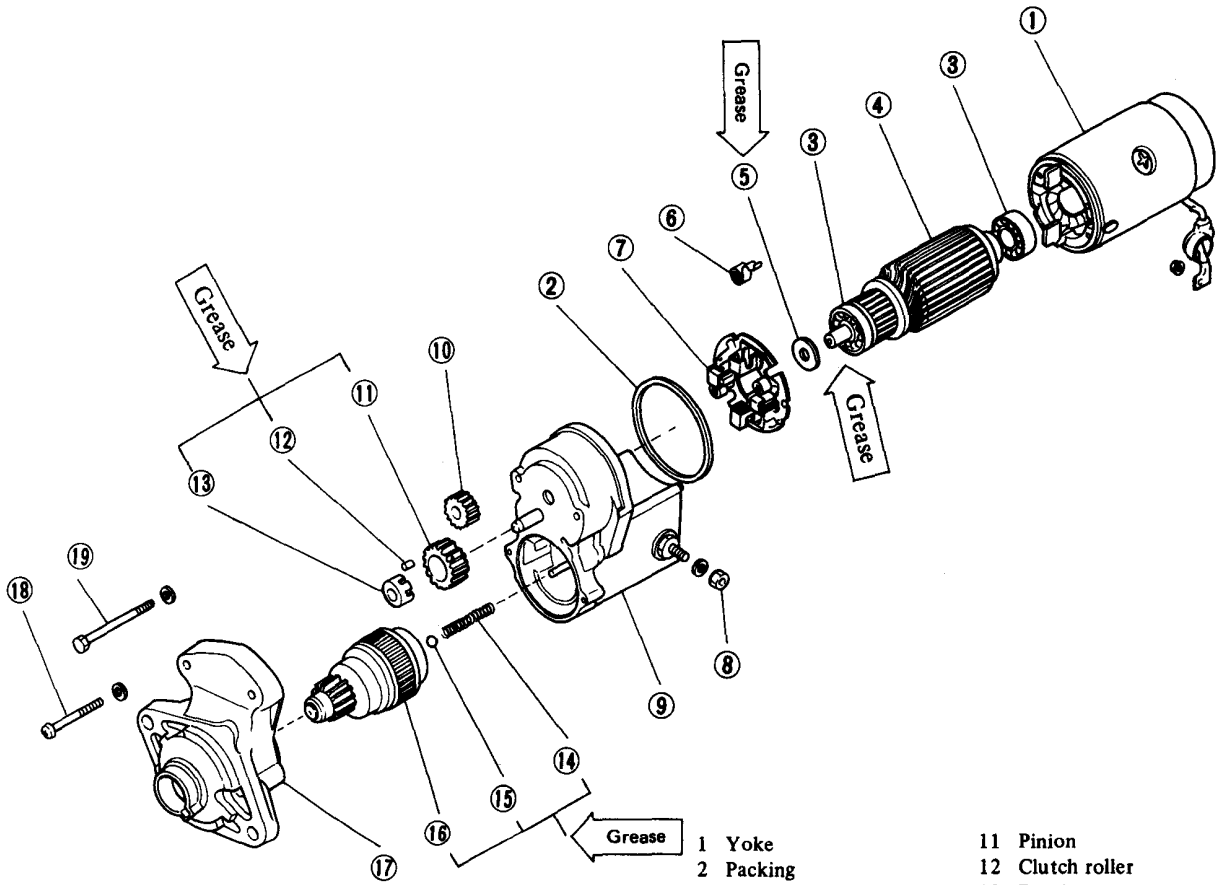

Fig. 15-13

• Cautions for Handling

1) Never operate the starter continuously for more than 30 seconds, even if starting is difficult.
Continuous operation of the starter will cause the battery to become rapidly discharged.
When the engine does not start after operating the starter for 5 to 10 seconds, rest for approximately 10 seconds, and operate again.

2) Do not operate the starter switch when the engine is running.
If operated, breakages of the pinion, or housing, or bending of the shaft may occur.

3) Once the engine is started, turn off the starter switch as soon as possible. If the starter switch is kept closed, the unloaded starter motor will rotate at an extremely high speed and armature coil may be broken due to centrifugal force, or the shaft may be seized.

Downloaded from www.Manualslib.com manuals search engine

2. Test

1) Magnetic Switch Operation

The following magnetic switch tests should be performed with specified voltage applied.

NOTE:
Each test should be conducted within 3 – 5 seconds. Power to be furnished should be one-half the rated voltage.

- **Magnetic switch type**

1) Pull-in coil attraction test
Prior to testing, disconnect the lead wire from the M terminal on the magnetic switch.
Connect the battery positive lead onto the S terminal and two battery negative leads onto the starter body and onto the M terminal respectively.

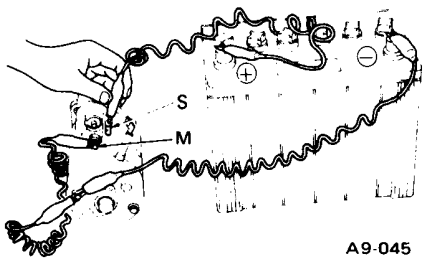

Fig. 5-14 Pull-in coil attraction test

The magnetic switch should push out overrunning clutch when the battery voltage is 8V or more. If not, the magnetic switch is defective and has to be replaced.

2) Hold-in test
Under the above condition, disconnect the battery negative lead from the M terminal.
The overrunning clutch must remain being pushed out.

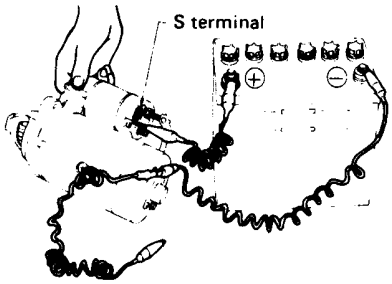

Fig. 15-15 Hold-in test

3) Return test
Check the magnetic switch return performance by connecting the battery positive lead onto M terminal, and the negative lead onto the starter body.

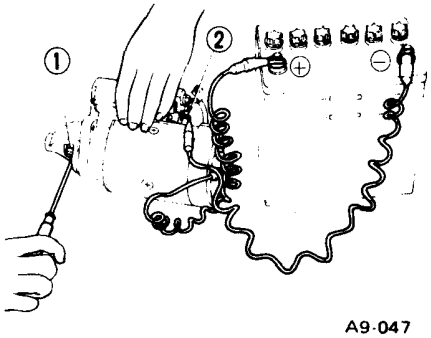

1 Pinion
2 M terminal

Fig. 15-16 Return test

After pulling out the pinion till it contacts the pinion stop collar, release it. At this time, if the pinion returns with the battery voltage of 12V, the magnetic switch is satisfactory. If not, the switch should be replaced.

4) Pinion clearance test
Check the clearance between the pinion and pinion stop collar with the magnetic switch connected to the battery as shown in figure.

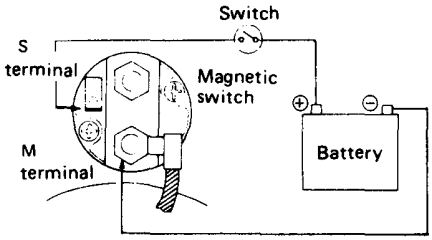

Fig. 15-17 Circuit of magnetic switch assembly test

Clearance between pinion and pinion stop collar	0.1 – 4 mm (0.004 – 0.157 in)

If the clearance is within the specified values, replace the starter.

- **Reduction type**

1) Checking the pull-in coil
Connect a lead wire between the negative (–) terminal of the battery and terminal C of the magnetic switch body. Then connect a lead wire between the positive (+) terminal of the battery and terminal 50.
The pinion gear should spring out when the positive lead wire is connected.

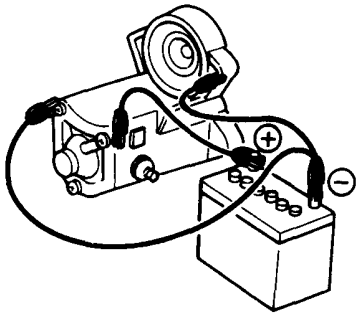

Fig. 15-18 Checking for operation of the pull-in coil

2) Checking the hold-in coil
In the same wiring connections as in 1) "Checking the pull-in coil" above, disconnect the lead wire from terminal C to see if the pinion gear remains sprung out. If not, the hold-in coil is malfunctioning.

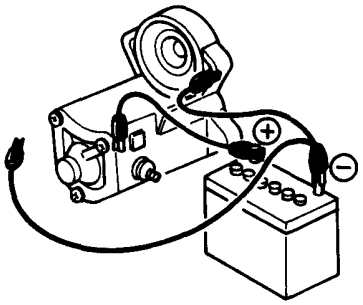

Fig. 15-19 Checking for operation of the hold-in coil

Downloaded from www.Manualslib.com manuals search engine

2) Performance Test

The starter should be submitted to performance tests whenever it has been overhauled, to assure its satisfactory performance when installed on the engine.
Three performance tests, no-load test, load test, and lock test, are presented here; however, if the load test and lock test cannot be performed, carry out at least the no-load test.
For these performance tests, use the circuit shown in figure.

1) No-load test
With the switch on, adjust the variable resistance to obtain 11V (magnetic switch type) or 11.5V (reduction type), take the ammeter reading and measure the starter speed. Compare these values with the specifications. (See specifications)

2) Load test
Apply the specified braking torque to the starter. The condition is satisfactory if the current draw and starter speed are within specifications. (See specifications)

3) Lock test
With the starter stalled, or not rotating, measure the torque developed and current draw when the voltage is adjusted to the specified voltage. (See specifications)

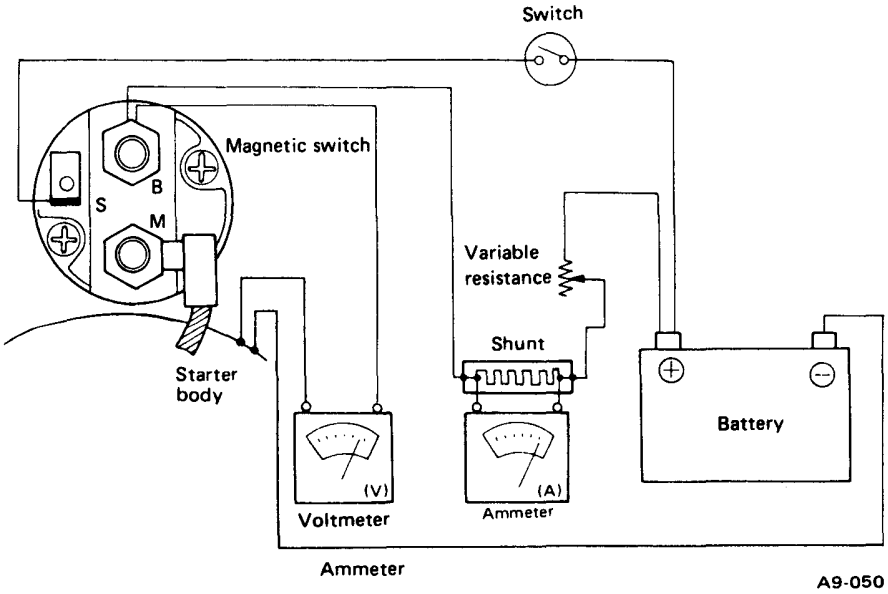

Fig. 15-20 Circuit for performance test

3. Repair for 1600 (Model: 028000-6520)

1) Disassembly

1) Disconnect the lead wire of M terminal.

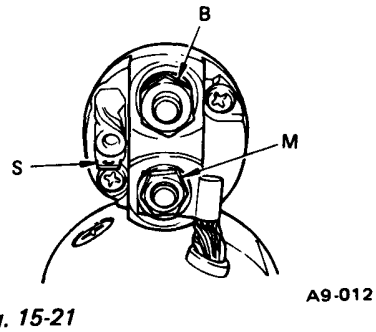

Fig. 15-21

2) Magnetic switch.
3) End frame cap, lock plate, spring and rubber seal.
4) Two through bolts and end frame.
5) Starter brushes from their holders by moving each brush holder spring aside.
6) Brush holder plate.
7) Separate the yoke from the housing.
8) Plate and rubber part from the housing.
9) Lever set bolt and armature from the housing together with the overrunning clutch and drive lever.
10) The pinion stop collar is fitted on the armature shaft with the snap ring.

Tap the pinion stop collar off the snap ring towards the overrunning clutch by using a pipe tool as shown in the figure.

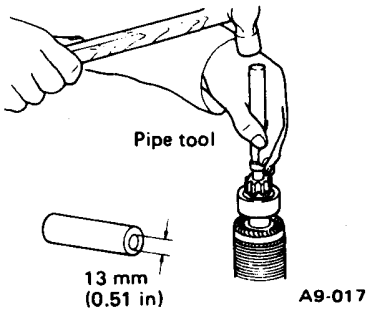

Fig. 15-22 Removing pinion stop collar

11) Snap ring by using a snap ring expander.
12) Pinion stop collar and overrunning clutch.

2) Inspection and Repair

Clean all disassembled parts prior to inspection. Do not use grease-dissolving solvent for cleaning overrunning clutch, armature, magnetic switch and field coil.
Check all parts for excessive damage or wear, and replace if necessary.

- **Armature**

a. Measure each clearance between the armature shaft and bushing in the housing, and between the armature shaft and bushing in the end frame. Replace parts if any of the clearances exceeds the specified limit.

Limit clearance	0.2 mm (0.008 in) or less

Outer diameter of armature shaft	12.425 – 12.440 mm (0.4892 – 0.4898 in)
Inner diameter of bushing	12.535 – 12.560 mm (0.4935 – 0.4945 in)

Downloaded from www.Manualslib.com manuals search engine

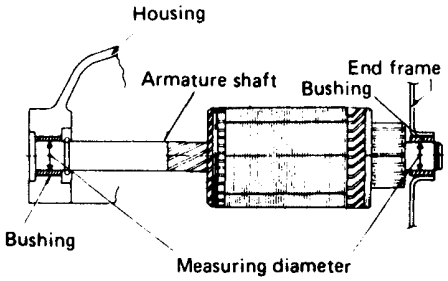

Fig. 15-23 Measuring diameters

b. Inspect the surface of the commutator and correct with emery cloth (No. 500) when it is rough.
If considerably rough, correct by using a lathe.
Replace the armature if the outer diameter of the commutator becomes less than the specified limit.
If there is oil on the surface, clean off with gasoline.

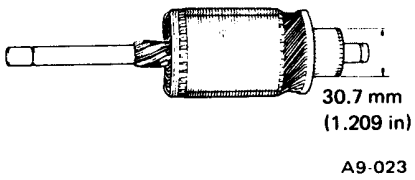

Fig. 15-24 Commutator outer diameter

Commutator outer diameter minimum limit	30.7 mm (1.209 in)

When the out-of-round of the commutator exceeds the limit, correct.

Out-of-round	Limit	0.4 mm (0.016 in)
	Standard	0.05 mm (0.0020 in) or less

c. Measure the depth of the top surface of each mica from the commutator surface, and correct if it exceeds the limit.

Depth of mica	Limit	0.2 mm (0.008 in)
	Standard	0.5 – 0.8 mm (0.020 – 0.031 in)

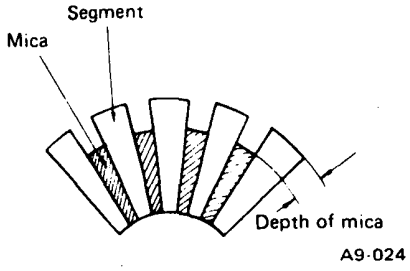

Fig. 15-25 Undercut dimension of the commutator

NOTE:
When the commutator outer diameter is corrected, make sure the depth of the top surface of each mica is 0.5 mm to 0.8 mm (0.020 to 0.031 in).

d. Armature coil insulation test
Test the insulation between the core and commutator segments, and between the commutator segments and shaft. Repair or replace whenever the insulation is defective.

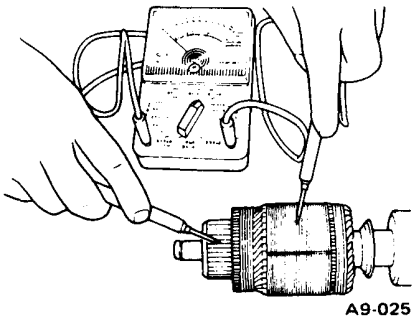

Fig. 15-26 Armature coil insulation test

e. Layer short test of armature coil
Place the core of the armature coil on a growler tester, apply an iron piece (hack-saw blade, etc.) to the core surface, and rotate the armature slowly.
If the iron piece vibrates and is attracted, there is a short circuit between the coils or between commutator segments.
Repair or replace.

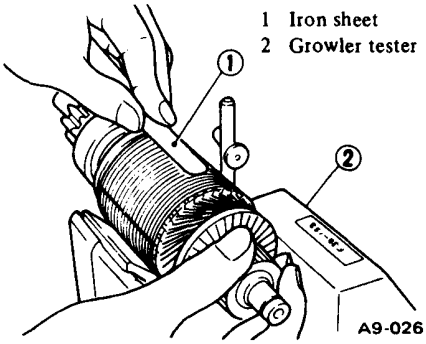

Fig. 15-27 Layer test of armature coil

f. Test for open armature coil
Check armature for continuity between two segments side by side.
If the tester shows no continuity the circuit is open.
Repair or replace.

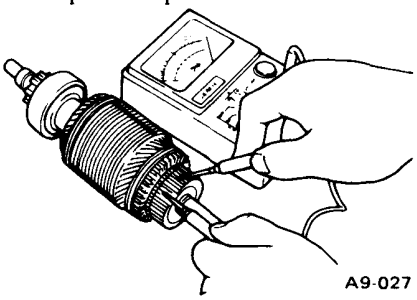

Fig. 15-28 Open-circuit test for armature coil

- **Field coil**

a. Insulation test of field coil
Check the insulation between the field coil (+) terminal and yoke.
If tester shows continuity, remove the pole cores one by one, locate the grounded part, and repair or replace.

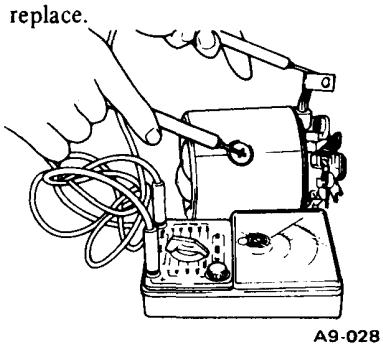

Fig. 15-29 Field coil insulation test

b. Test for open field coil
Using a circuit tester, check the field coil for continuity, and replace if open.

c. Check the resistance between the connecting lead wire and the soldered parts of the brush lead wires.
The resistance should be almost zero ohm.

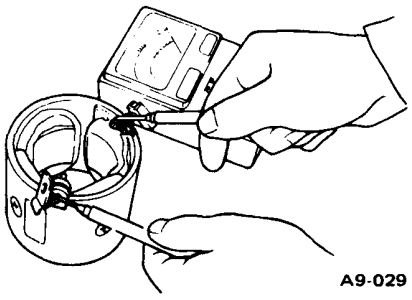

Fig. 15-30 Field coil resistance test

Downloaded from www.Manualslib.com manuals search engine

- **Brush holder**

Check the brush holder for short circuit between the positive side brush holders and ground, repair or replace if continuity is shown.

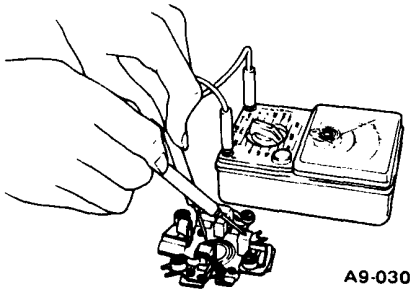

Fig. 15-31 Brush holder insulation test

- **Brush**

a. Measure each brush length, and replace if shorter than the specified limit.

Brush length	Standard	16 mm (0.63 in)
	Limit	11 mm (0.43 in)

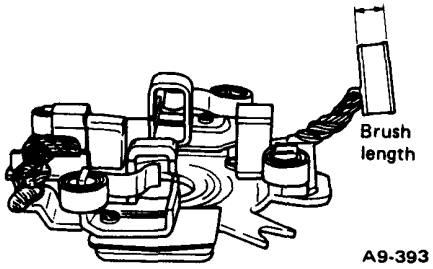

Fig. 15-32 Brush length

b. Inspect the brush spring, and replace if considerably corroded or deteriorated.

c. Measure the tension of the brush spring and replace if not to specification.

Brush spring tension	Standard	1,050 – 1,350 g (37.03 – 47.61 oz)

NOTE:

Read the scale at the moment when the brush spring leaves the brush.

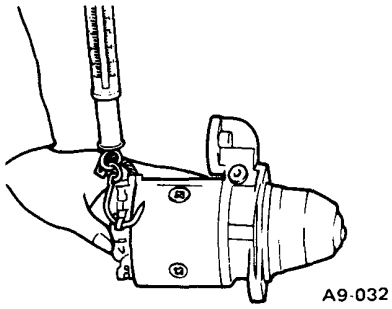

Fig. 15-33 Measuring brush spring tension

- **Overrunning clutch**

Inspect the pinion and the screw sleeve. The screw sleeve must slide freely along the armature shaft splines. If damage is found or resistance is felt when sliding, repair or replace.

Inspect the pinion teeth. If excessive wear is found on the teeth, replace the clutch and inspect the flywheel ring gear, too.

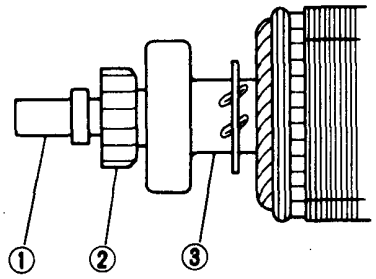

1 Armature shaft
2 Pinion
3 Screw sleeve

Fig. 15-35 Overrunning clutch

3) Assembly

When assembling, remove all oil, dust, etc. from the commutator and brush surfaces.

Put proper oil or grease on the following parts.

- Commutator shaft
- Overrunning clutch
- Drive lever
- Housing bushing
- End frame bushing
- Magnetic switch
- End frame cap

1) Position the overrunning clutch and pinion stop collar on the armature shaft.

Install the snap ring into the groove in the armature shaft.

Using a hand press, press the pinion stop collar so that the snap ring is inserted into the groove in the pinion stop collar.

NOTE:

When installing the snap ring, be careful not to damage the shaft.

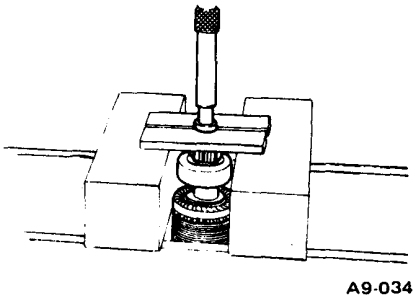

Fig. 15-35 Installing pinion stop collar

2) Install the armature into the housing, position the drive lever and spring and insert the lever set bolt through the lever hole. Tighten the bolt.

NOTE:

Inspect the drive lever and spring for wear. Replace if necessary.

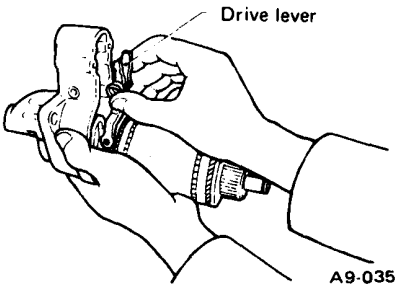

Fig. 15-36 Installing drive lever

3) Install the plate and rubber part.

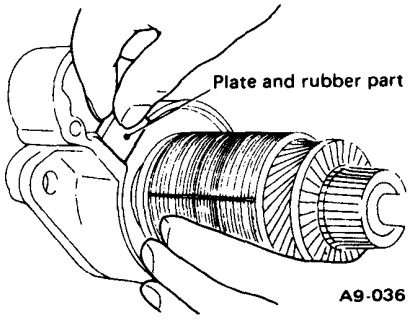

Fig. 15-37 Installing plate and rubber part

Downloaded from www.Manualslib.com manuals search engine

4) Match the notch in the yoke with the tab of the rubber part and assemble the yoke with the housing.

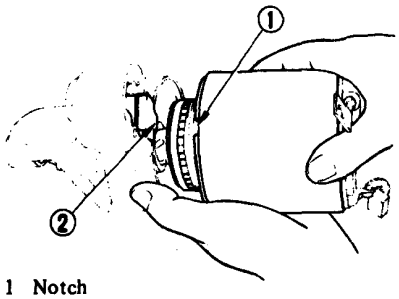

1 Notch
2 Tab

A9-037

Fig. 15-38 Assembling yoke with housing

5) Install the brush holder plate, and fit the four brushes into the brush holders, checking that the parts on positive side are not grounded.

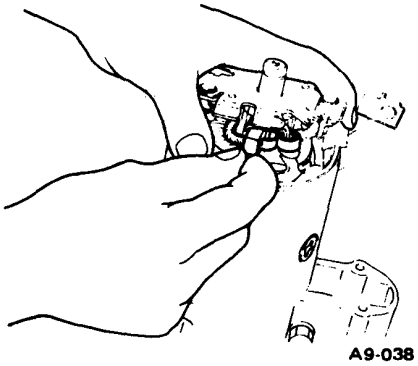

A9-038

Fig. 15-39 Installing brushes

6) Matching the notch for the connecting lead wire, position the end frame on the yoke. Install the two through bolts, plain washers and spring washers and tighten them.

NOTE:
Before inserting the bolts, match the bolt holes carefully.

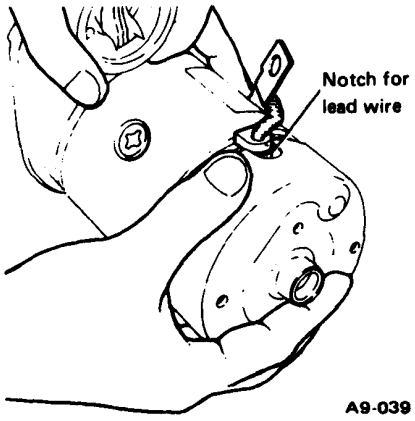

A9-039

Fig. 15-40 Installing end frame

7) Install the rubber seal, spring, lock plate and end frame cap, and secure them with the screws and spring washers.

NOTE:
Apply grease to the cap.

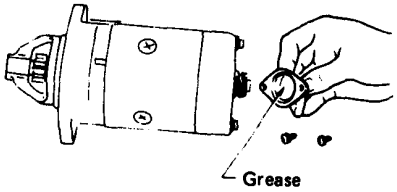

A9-040

Fig. 15-41 Installing end frame cap

8) Turn the pinion in its rotating direction, and make sure that it rotates smoothly together with the armature.

Rotating direction (when observed from the pinion side): Left

9) After engaging the plunger head of the magnetic switch to the drive lever, install the switch on the housing, and connect the lead wire to the M terminal.

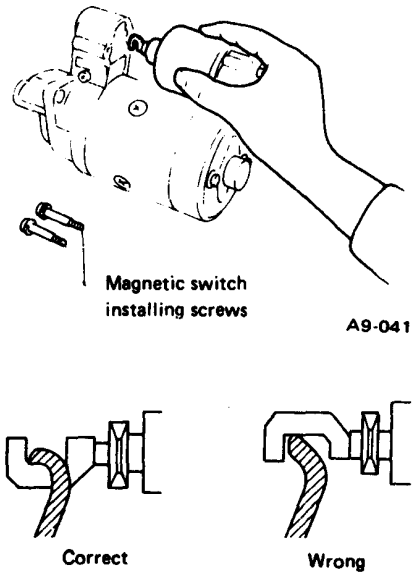

A9-041

A9-042

Fig. 15-42 Installing magnetic switch

4. Repair for 1800 (Model: 028000-8580 and -8570)

1) Disassembly

1) Disconnect lead wiring from magnet switch.
2) Remove screws, bolts, etc.
- Two through bolts
- Two screws from starter housing
- Two screws and rear frame (model: 028000-8580 only)

3) Separate starter housing from magnet switch.
4) Take out drive gear from armature shaft. (model: 028000-8570 only)
5) Separate yoke from magnet switch.
6) Using long-nose pliers, take off brushes, and pull out brush holder from armature.

NOTE:
Be careful not to scratch brushes, bearing and commutator.

7) Separate armature from yoke.

NOTE:
Be careful not to damage bearings.

8) Separate pinion and overrunning clutch.

NOTE:
a. Magnetic switch should be replaced as a sub-assembly.
b. Never loosen contact (terminal) bolt.

2) Inspection

- Armature

1) Check commutator for any sign of burns or rough surfaces or stepped wear. If wear is of a minor nature, correct it by using sandpaper.
2) Measure the outside diameter of the commutator.
(Model: 028000-8570)

Standard	30 mm (1.18 in)
Wear limit	29 mm (1.14 in)

Downloaded from www.Manualslib.com manuals search engine

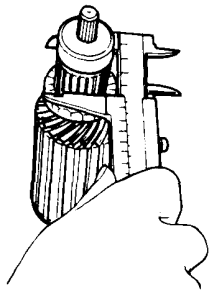

Fig. 15-43 Measuring the outside diameter of the commutator

3) Run-out test
Check the commutator run-out and replace if it exceeds the limit.
(Model: 028000-8580)

Standard	0.02 mm (0.0008 in)
Service limit	Less than 0.05 mm (0.0020 in)

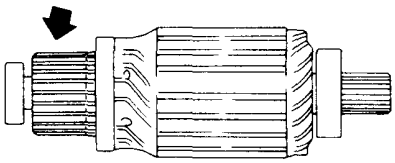

Fig. 15-44 Commutator run-out test

4) Depth of segment mica
Check the depth of segment mica.

Standard	Model 028000-8580	0.5 – 0.8 mm (0.020 – 0.031 in)
	Model 028000-8570	0.5 – 0.9 mm (0.020 – 0.035 in)
Service limit		0.2 mm (0.008 in)

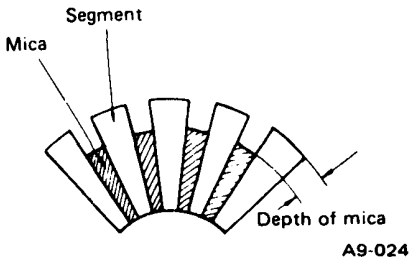

Fig. 15-45 Depth of segment mica

5) Armature short circuit test
Check armature for short circuit by placing it on growler tester. Hold a hacksaw blade against armature core while slowly rotating armature. A short-circuited armature will cause the blade to vibrate and to be attracted to core. If the hacksaw blade is attracted or vibrates, the armature, which is short-circuited, must be replaced or repaired.

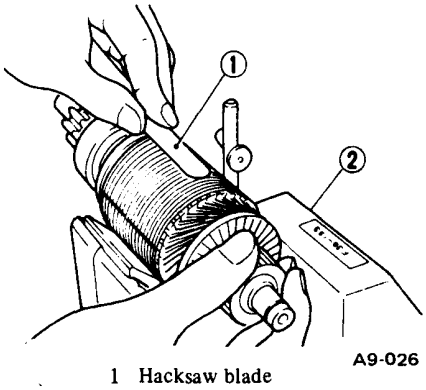

1 Hacksaw blade
2 Growler tester

Fig. 15-46 Armature short-circuit test

6) Armature ground test
Using a circuit tester, touch one probe to the commutator segment and the other to armature core. There should be no continuity. If there is a continuity, armature is grounded. Replace armature if it is grounded.

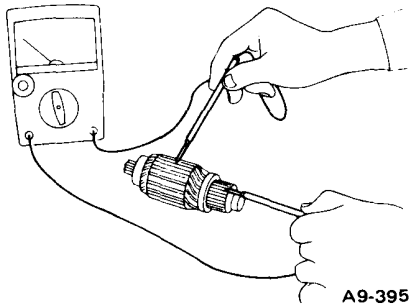

Fig. 15-47 Armature ground test

7) Armature continuity test
Using a circuit tester, touch two probes to segments. There should be continuity at any test points. Replace if it is open-circuited.

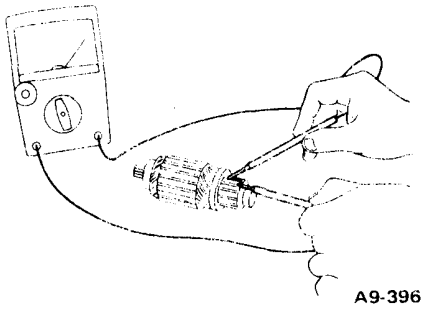

Fig. 15-48 Armature continuity test

- **Yoke**

1) Field coil ground test
Using a circuit tester, touch one probe to field coil end or brush and the other to the bare surface of yoke body. There should be no continuity. If there is continuity, field coil is grounded. Be sure to repair if it is grounded.

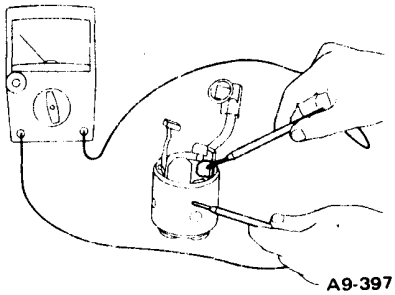

Fig. 15-49 Field coil ground test

2) Field coil continuity test
Using a circuit tester, touch one probe to "C" terminal lead wire and the other to brush. There should be continuity. If there is no continuity, field coil is defective.

NOTE:
If field coil is defective, yoke assembly must be replaced.

(Model: 028000-8580)

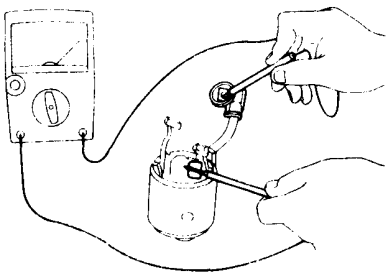

Downloaded from www.Manualslib.com manuals search engine

(Model: 028000-8570)

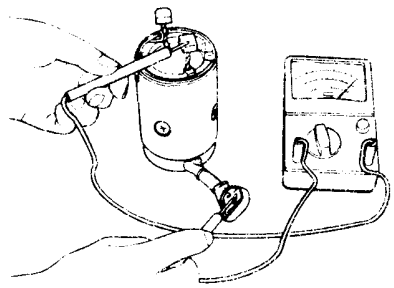

A9-265

Fig. 15-50 Field coil continuity test

- **Brush and brush holder**

1) Brush length
Measure the brush length and replace if it exceeds the service limit.

Standard		14 mm (0.55 in)
Service limit	Model: 028000-8580	9 mm (0.354 in)
	Model: 028000-8570	8.5 mm (0.335 in)

NOTE:

a. If brushes are worn, replace them as entire yoke assy or entire brush holder assembly.

b. Correct the contact surface of each brush after sandpaper (No. 300 or higher) has been wrapped around the commutator.

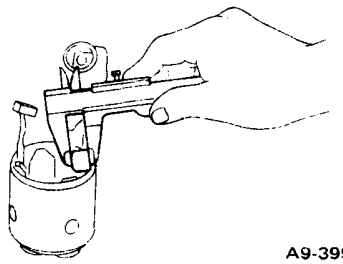

A9-399

Fig. 15-51 Brush length

2) Brush holder insulation test
Using a circuit tester, check brush holder insulation. Touch one probe to holder plate and the other to positive brush holder. There should be no continuity.

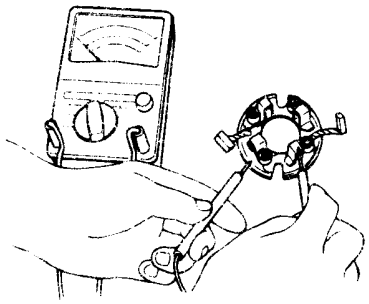

A9-288

Fig. 15-52 Brush holder insulation test test

- **Overrunning clutch**

Inspect teeth of pinion for wear and damage. Replace it if damaged. Rotate pinion in direction of rotation (clockwise). It should rotate smoothly. But in opposite direction, it should be locked.

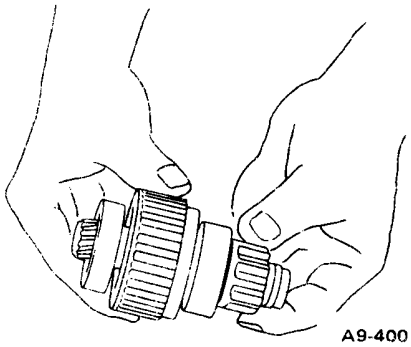

A9-400

Fig. 15-53 Overrunning clutch test

- **Bearing**

Check bearings for wear and damage. If bearings are noisy during operation, they should be replaced.

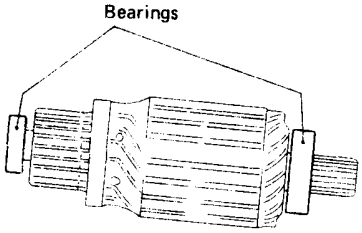

A9-401

Fig. 15-54 Bearing

3) Assembly

- **Model: 028000-8580**

1) Before assembling, completely clean oil or dust off the surfaces of both commutator and brushes.

2) Apply a sufficient amount of grease to parts where necessary. (See Fig. 15-12)

3) Assemble starter pinion and starter housing.

4) Assemble overrunning clutch and starter housing.

NOTE:

Do not forget to assemble steel ball and return spring.

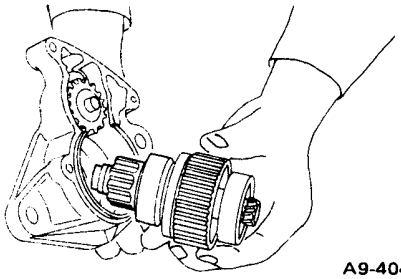

A9-404

Fig. 15-55

5) Assemble brush holder and armature.

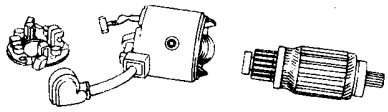

A9-405

Fig. 15-56

6) Assemble brushes by using a long-nose pliers.

NOTE:

Take care not to damage nor to get oil on brushes.

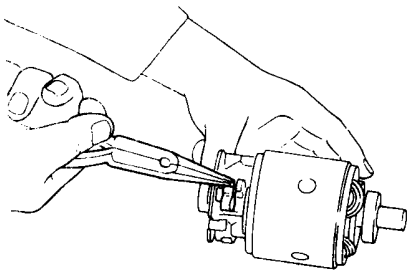

A9-406

Fig. 15-57

7) Assemble rear frame and yoke.

8) Assemble yoke and magnet switch.

Downloaded from www.Manualslib.com manuals search engine

9) Assemble starter housing and magnet switch.

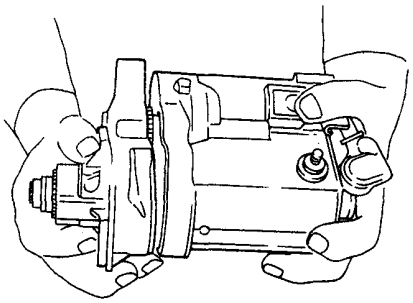

Fig. 15-58

10) Tighten two screws in rear frame.

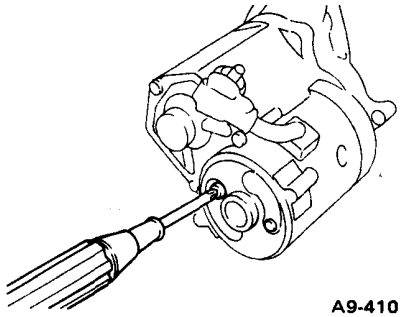

Fig. 15-59

11) Tighten two screws in starter housing.

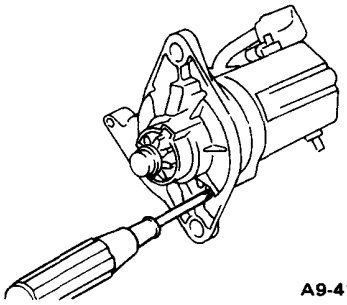

Fig. 15-60

12) Tighten two through bolts in yoke.

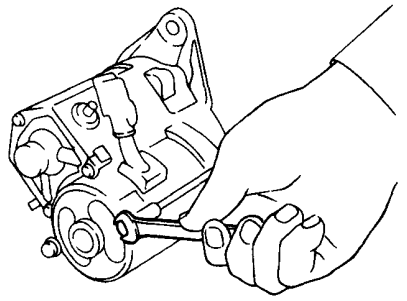

Fig. 15-61

13) Connect lead wire to magnet switch.

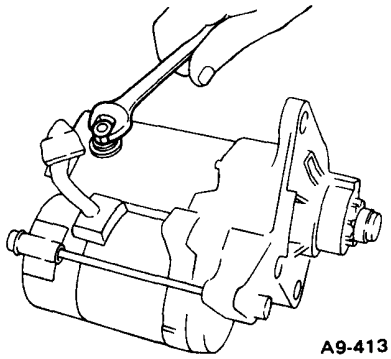

Fig. 15-62

3) Assembly

- **Model: 028000-8570**

1) Before assembling, completely clean oil or dust off the surfaces of both the commutator and brushes.
2) Apply a sufficient amount of grease to parts where necessary. (See Fig. 15- 13)
3) Install the clutch and idler gear on the magnetic switch.

NOTE:

a. Be sure to install the steel balls and spring when installing the clutch.
b. Be sure to apply a sufficient amount of grease to the roller and retainer before installing them on the idler gear.

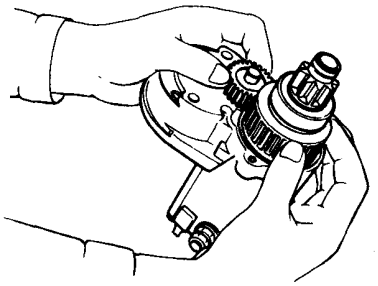

Fig. 15-63 Installing clutch

4) Install the armature into the yoke.

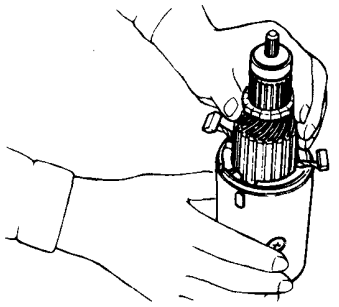

Fig. 15-64 Installing armature

5) Install the brush holder on the yoke, and attach the two brushes to the brush holder on the yoke side.
6) Put a rubber packing on the mating surface of the yoke, and install the yoke with the magnetic switch.

NOTE:
Be sure to install a felt washer on the armature shaft bearing.

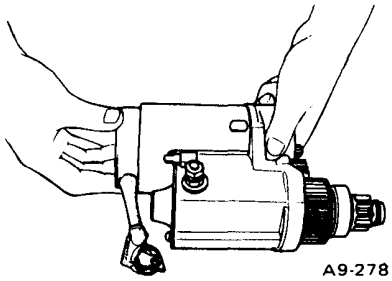

Fig. 15-65 Attaching yoke

7) Install the drive gear over the armature shaft.

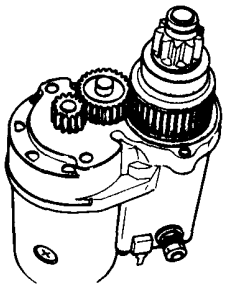

Fig. 15-66 Installing drive gear

8) Attach the magnetic switch to the housing, and secure them with the two screws.

Downloaded from www.Manualslib.com manuals search engine

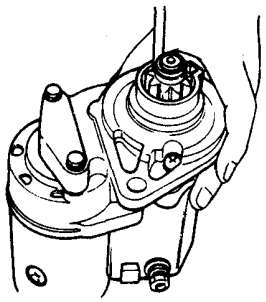

A9-275

Fig. 15-67 Installing housing

9) Connect the yoke lead wire to the magnetic switch.

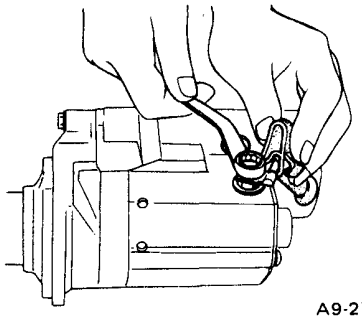

A9-274

Fig. 15-68 Connecting lead

15-4. Alternator

1. Summary

1) Component Parts

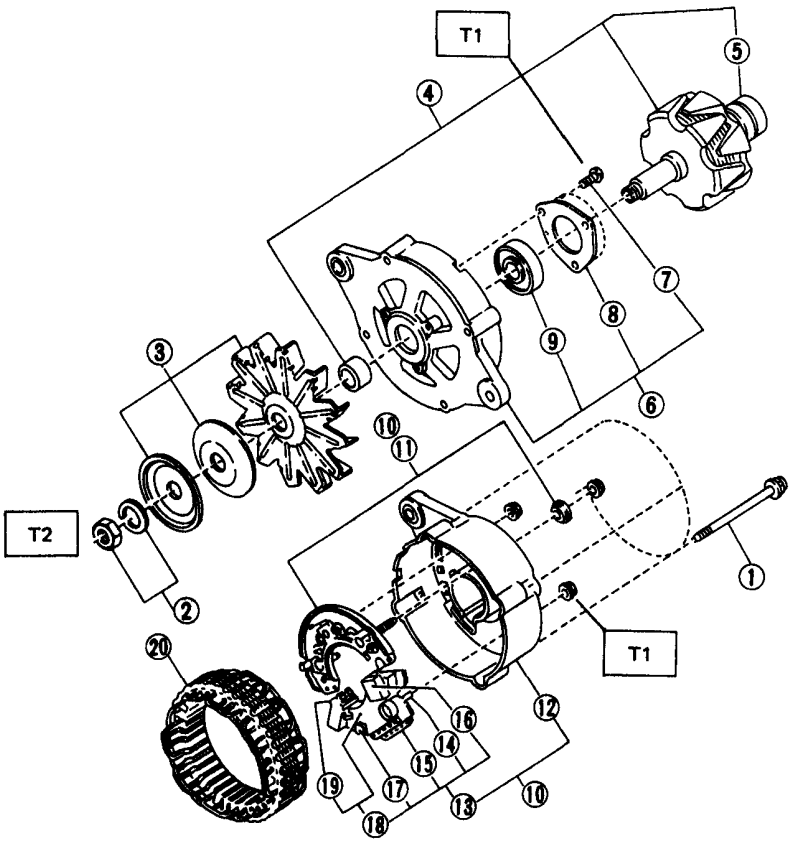

1 Through bolt
2 Pulley nut set
3 Pulley ASSY
4 Rotor ASSY
5 Ball bearing
6 Front cover ASSY
7 Bolt
8 Retainer
9 Ball bearing
10 Rear cover ASSY
11 Diode ASSY
12 Rear cover
13 Brush & regulator ASSY
14 Bolt
15 IC regulator
16 Condenser
17 Bolt
18 Brush ASSY
19 Brush ASSY
19 Brush
20 Stator ASSY

Tightening torque N·m (kg·m, ft·lb)
T1: 3.1 - 3.9 (0.32 - 0.40, 2.3 - 2.9)
T2: 39 - 59 (4.0 - 6.0, 29 - 43)

A9-414

Fig. 15-69

Downloaded from www.Manualslib.com manuals search engine

2) Cautions for Handling

1) Do not operate the alternator at high speeds with its output terminal (BAT terminal) disconnected.
Otherwise the diode may be damaged due to high voltage generated.
2) When reaching the battery by a quick charge, etc., disconnect the alternator output terminal (BAT terminal) before recharging.
3) When inspecting the circuit between individual terminals, or when performing a continuity test of the diode, do not use a high voltage tester, such as a megger, as the diode will be damaged.
Use an ordinary tester.

2. Test

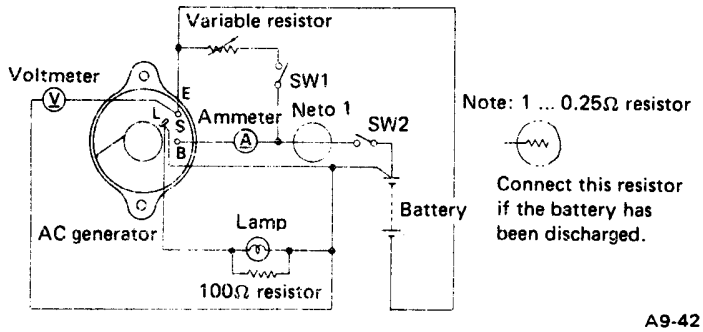

Fig. 15-70

1. Generator speed at 13.5V

1) Open switch SW_1, and close switch SW_2. Gradually raise generator speed, and read the speed when the voltage is 13.5 V.
2) The generator is normal if it turns at 900 rpm when the voltage is 13.5 V.

2. Measurement of regulating voltage

Open switch SW_1 and close SW_2. Turn the generator at 5,000 rpm. The regulator is normal if the voltage is within 14.5 ± 0.3 V with a fully charged battery.

3. Measurement of output current

1) With the variable resistor set to the minimum resistance position, close switches SW_1 and SW_2 in order to turn the generator.
2) Raise generator speed while keeping the voltage constant by adjusting the variable resistor. Measure the current at 1,250 rpm, 2,500 rpm and 5,000 rpm.

1,250 rpm	Greater than 20 A
2,500 rpm	Greater than 50 A
5,000 rpm	Greater than 55 A

3. Disassembly

1) Remove the through bolts from the alternator. Detach front cover with rotor from rear cover with stator by light tapping on front cover with a plastic hammer.
2) Hold the rotor with a vise and remove the pulley nut.

NOTE:
When holding the rotor with the vise, insert aluminum plates on the contact surfaces of the vise to prevent the rotor from damage.

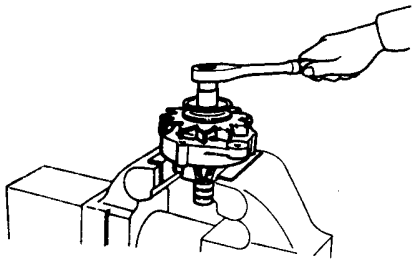

Fig. 15-71 Removing pulley

3) Rotor from front cover.
4) Three screws from front cover and then retainer and ball bearing.
5) Separate the stator with diode assembly and brush assembly from rear cover by removing the nuts on rear cover.
6) Disconnect diode assembly, brush assembly and IC regulator all together from stator coil lead wires by using soldering iron.

NOTE:
Melting should be done quickly not to damage the diodes and IC regulator.

7) Disconnect the diode assembly from the brush and IC regulator by removing 3 mm (0.12 in) dia. rivet and by unsoldering L-terminal.
8) To replace the IC regulator, first unsolder the regulator terminals, and then remove the two bolts.

NOTE:
Do not remove these bolts except when replacing the IC regulator.

4. Inspection and Repair

1) Rotor

1) Inspect the slip rings for contamination or any roughness of the sliding surface.
Clean or polish with #500 to #600 emery paper if defective.

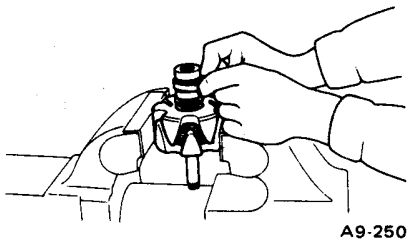

Fig. 15-72 Correcting roughened slip ring

2) Broken wire test
Inspect the rotor coil for continuing between the slip rings.
If there is no continuity, it is broken.
Replace rotor assembly.

Resistance of rotor coil	4 – 5Ω

Downloaded from www.Manualslib.com manuals search engine

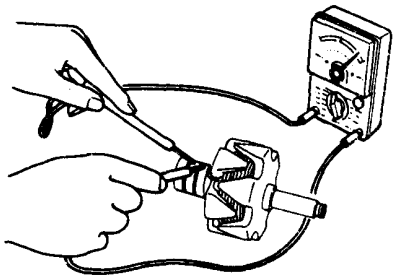

A9-251

Fig. 15-73 Broken wire test in rotor coil

3) Insulation test

Inspect continuity between slip ring and rotor core. If continuity exists, replace rotor assembly because rotor coil or slip ring is broken.

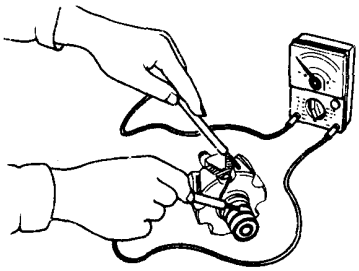

A9-252

Fig. 15-74 Insulation test of rotor coil

4) Check the ball bearing and replace if defective.

2) Stator

1) Broken wire test

Inspect the stator coil for continuity between its terminals.

When there is no continuity between individual terminals, the cable is broken.

Replace stator assembly.

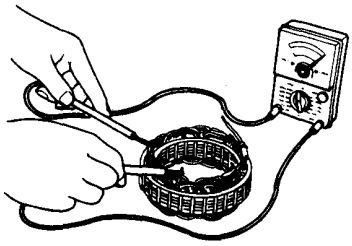

A9-253

Fig. 15-75 Stator coil broken wire test

2) Insulation test

Inspect the stator coil for continuity between the stator core and the each terminal. If there is continuity, stator coil is grounded.

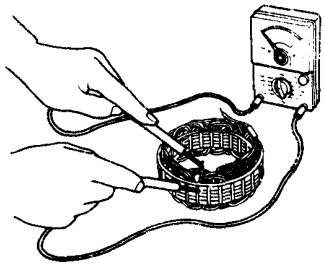

A9-254

Fig. 15-76 Stator coil insulation test

3) Brush

1) Inspect the movement of the brush and if the movement is not smooth, check brush holder and clean it.

Check brush for wear. If it is worn out to less than specified limit, replace brush assembly.

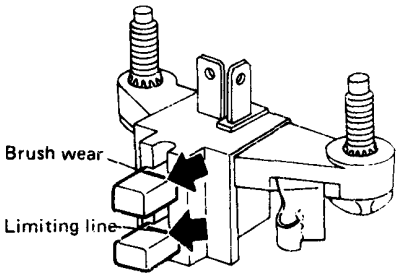

A9-255

Fig. 15-77 Brush wear limit

2) With brush protruded approximately 2 mm (0.08 in) from brush holder, measure brush spring pressure with a spring balance.

Normally the pressure of a new brush spring is 255 to 345 g (8.99 to 12.17 oz). When brush is worn, pressure decreases approximately 20 g (0.71 oz) per 1 mm (0.04 in) wear.

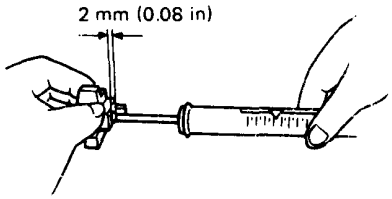

A9-256

Fig. 15-78 Measuring spring pressure

4) Diode Assembly

Perform a continuity test on diodes in both directions, using an ohmmeter.

A total of six diodes are used, there are mounted on the positive (+) plate, and other three are on the negative (–) plate.

The continuity test should be performed on each diode between the terminal and plate.

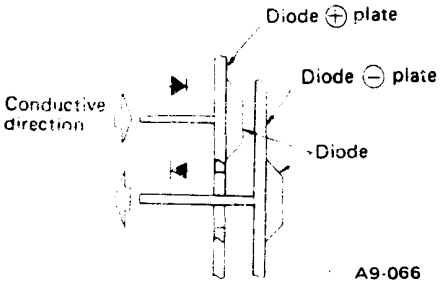

A9-066

Fig. 15-79 Direction of diode conduction

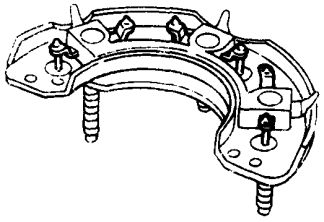

A9-257

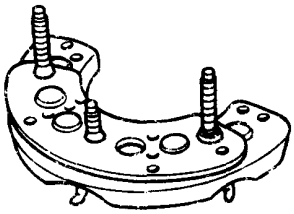

A9-258

Fig. 15-80 Diode assembly

Diodes installed on (+) plate are positive diodes which allow current flowing from terminal to (+) plate only.

Diodes installed on (–) plate are negative diodes which allow current flowing from (–) plate to terminal only. If each current flows in the same direction only, the diode is in good condition.

If current flows toward both positive and negative directions, the diode is short circuited. In this case, replace diode assembly.

Downloaded from www.Manualslib.com manuals search engine

NOTE:
Never use a high tension insulation tester, such as a meggar as it will damage the diodes with its high tension.

Normal conditions of continuity are shown in the following table.

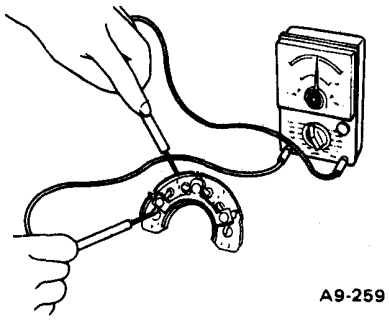

Fig. 15-81 Inspecting positive diode

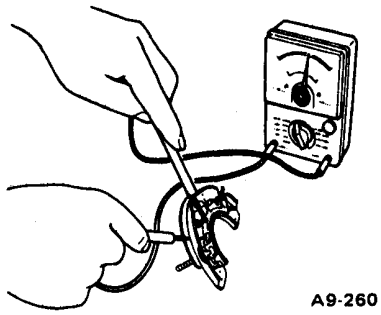

Fig. 15-82 Inspecting negative diode

		Connect (+) terminal of tester and ;		
		Diode (+) plate	Diode (–) plate	Diode (+) terminal
Connect (–) terminal of tester and ;	Diode (+) plate		Nonconduction	Nonconduction
	Diode (–) plate	Conduction		Conduction
	Diode (–) terminal	Conduction	Nonconduction	

5) IC Regulator

1) Prepare the following measuring apparatus:

a. Resistor
   10Ω 3W (one)
b. Variable resistor
   0 to 300Ω, 3W (one)
c. Battery
   12 V (two)
d. DC voltmeter
   0 to 30 V, (one)

2) Connect the above-listed apparatus as shown in Fig. 15-83 "Check circuit wiring diagram (1)", and perform checks in the following sequence;

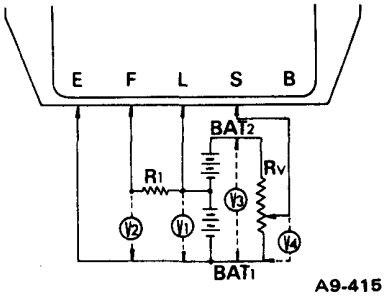

Fig. 15-83 Check circuit wiring diagram (1)

a. Check V_1 (voltage of battery 1). Battery 1 is normal if 10 V to 13 V is indicated.

b. Check V_2 (voltage between terminals F and E) with terminal S disconnected. IC regulator is normal if the voltage is below 2.0 V. If a voltage of 2.0 V or higher is indicated, the regulator is faulty and should be replaced.

c. Check V_3 (total voltage of batteries 1 and 2). Both batteries are normal if 20 V to 26 V is measured.

d. Measure V_2 (voltage between terminals F and E) while slowly increasing the resistance of the variable resistor, starting from 0. Check whether the voltage of V_2 changes from below 2.0 V to 10 V – 13 V of V_3 (that is, the voltage of battery 1). If no change occurs, the regulator is faulty and must be replaced.

e. Measure V_4 (voltage between center tap of variable resistor and terminal E). With variable resistor Rv fixed, check V_4 to see whether it is within the specified range. If V_4 is in the specified range, the regulator is normal. If not, the regulator is faulty and must be replaced.

Specified voltage range	14.5 ± 0.3 V

f. Connect measuring apparatus as shown in Fig. 15-84 "Check circuit wiring diagram (2)", and measure V_4 (voltage between terminals B and E). Perform check in the same manner as in steps d and e above. If a voltage 0.5 V to 2.0 V higher than V_4 is measured, the regulator is normal. In other cases, replace the regulator.

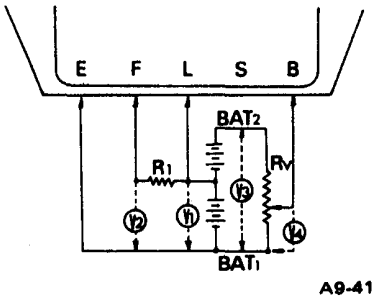

Fig. 15-84 Check circuit wiring diagram (2)

5. Assembly

1) Assembling brush and IC regulator

a. Soldering brush
   Set the brush in position and solder the leads.

Downloaded from www.Manualslib.com manuals search engine

NOTE:
Use care not to allow melted solder to flow over the lead wire.

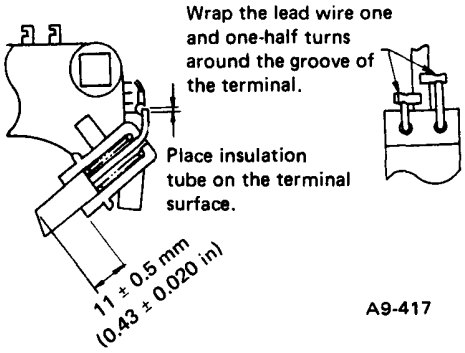

Fig. 15-85 Assembling brush

b. Assembling IC regulator
Place the IC regulator on the brush holder as shown in Fig. 15-86, and force-fit a 5 mm bolt. Be sure to set the bushing and connecting plate.

Note:
The output terminal is grounded and the battery will be short-circuited if the bushing is not installed.

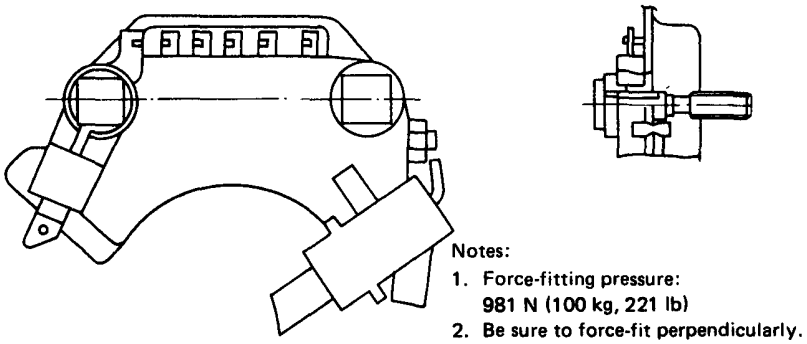

Fig. 15-86 Assembling IC regulator

2) Connecting brush & IC regulator assembly and diode.

a. Joining by riveting
Insert a 3 mm (0.12 in) dia. rivet as shown in Fig. 15-87, and caulk the rivet using a caulking tool.

Caulking pressure	4,904 N (500 kg, 1,103 lb)

b. Connecting brush and diode
Insert the brush terminal into the diode terminal which has been warmed by a soldering iron, and caulk both terminals. Then solder these terminals.

1 IC regulator
2 Rivet
3 Diode

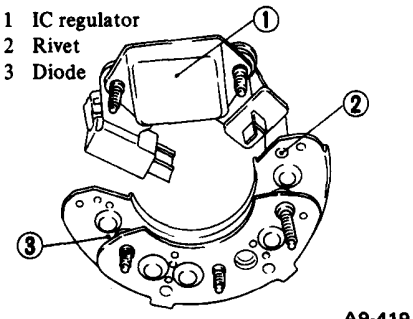

Fig. 15-87 Joining by reveting

3) Connect the each stator coil lead wire to diode assembly and brush terminals by soldering.

NOTE:
Soldering should be done quickly not to damage the diodes.

4) Install and tighten diode assembly and brush assembly to rear cover by nuts.

Torque	3.1 – 3.9 N·m (0.32 – 0.40 kg-m, 2.3 – 2.9 ft-lb)

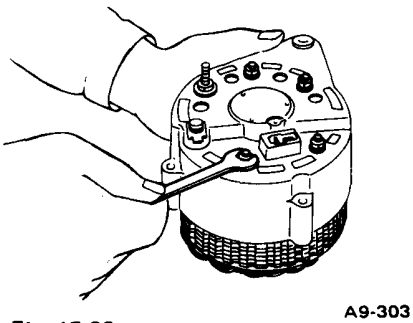

Fig. 15-88

5) After installing the bearing into front cover, install the bearing retainer on it by tightening three screws.

Torque	3.1 – 3.9 N·m (0.32 – 0.40 kg-m, 2.3 – 2.9 ft-lb)

6) Install the rotor assembly into the front cover.

7) Hold the rotor with a vise and install the spacer, fan, pulley, spring washer and pulley nut.

Tighten the pulley nut to following torque.

Torque	39 – 59 N·m (4.0 – 6.0 kg-m, 29 – 43 ft-lb)

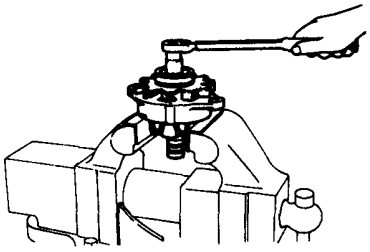

Fig. 15-89

NOTE:
When holding the rotor with a vise, insert aluminum plates between the vise and rotor to prevent the rotor from damage.
When pulley is tightened, make sure that deflection of V-groove is less than 0.3 mm (0.012 in).

8) Push the brush up with the finger and retain the brush by inserting a pin, about 2 mm (0.08 in) dia, into brush lift hole from outside of the rear cover.

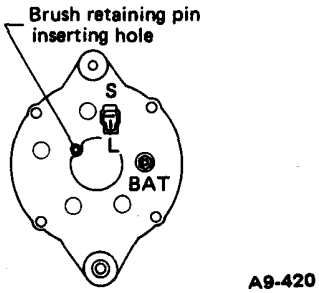

Downloaded from www.Manualslib.com manuals search engine

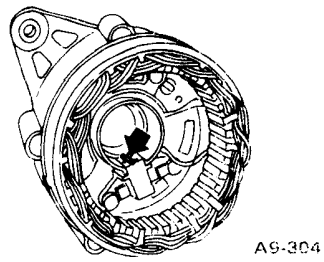

Fig. 15-90

9) Assemble the front and rear parts of alternator and tighten the through bolts.

Torque	3.1 – 5.4 N m (0.32 – 0.55 kg-m, 2.3 – 4.0 ft-lb)

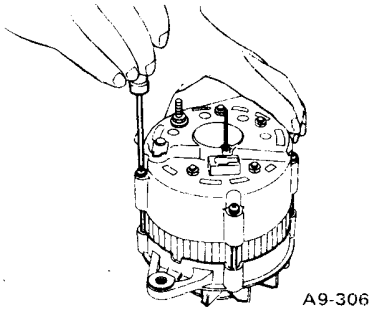

Fig. 15-91

10) After assembling the alternator, pull up the brush holding pin by pushing toward center of hole.

NOTE:

Be careful not to damage the slip ring sliding surface by pulling pin.

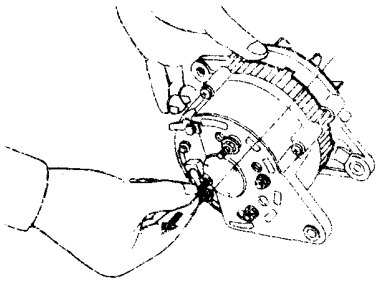

Fig. 15-92

6. Installation

1) Install the alternator to bracket on the engine with bolts and tighten the bolts lightly.

2) After installing a drive belt, tighten the belt by moving the alternator and tighten the installing bolts.

3) Check the belt tension as shown figure.

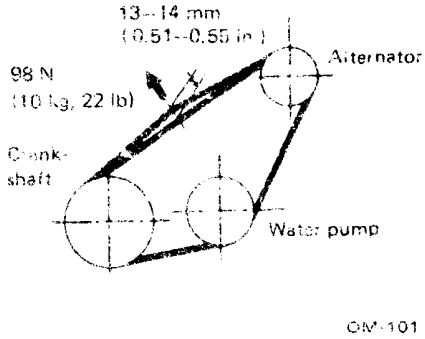

Fig. 15-93

4) Connect the lead wires to the alternator.

NOTE:

a. Be careful not to connect the individual terminals erroneously.

b. Pay careful attention to battery polarity so that it may not be reversed by wrong connection. If polarities are reversed, the battery will be shorted by the diode, excessive current will flow, and the diodes or the wire harness may be damaged.

Downloaded from www.Manualslib.com manuals search engine

15-5. Distributor

1. Summary

1) Component Parts

1. All models except 4WD (NIPPONDENSO)

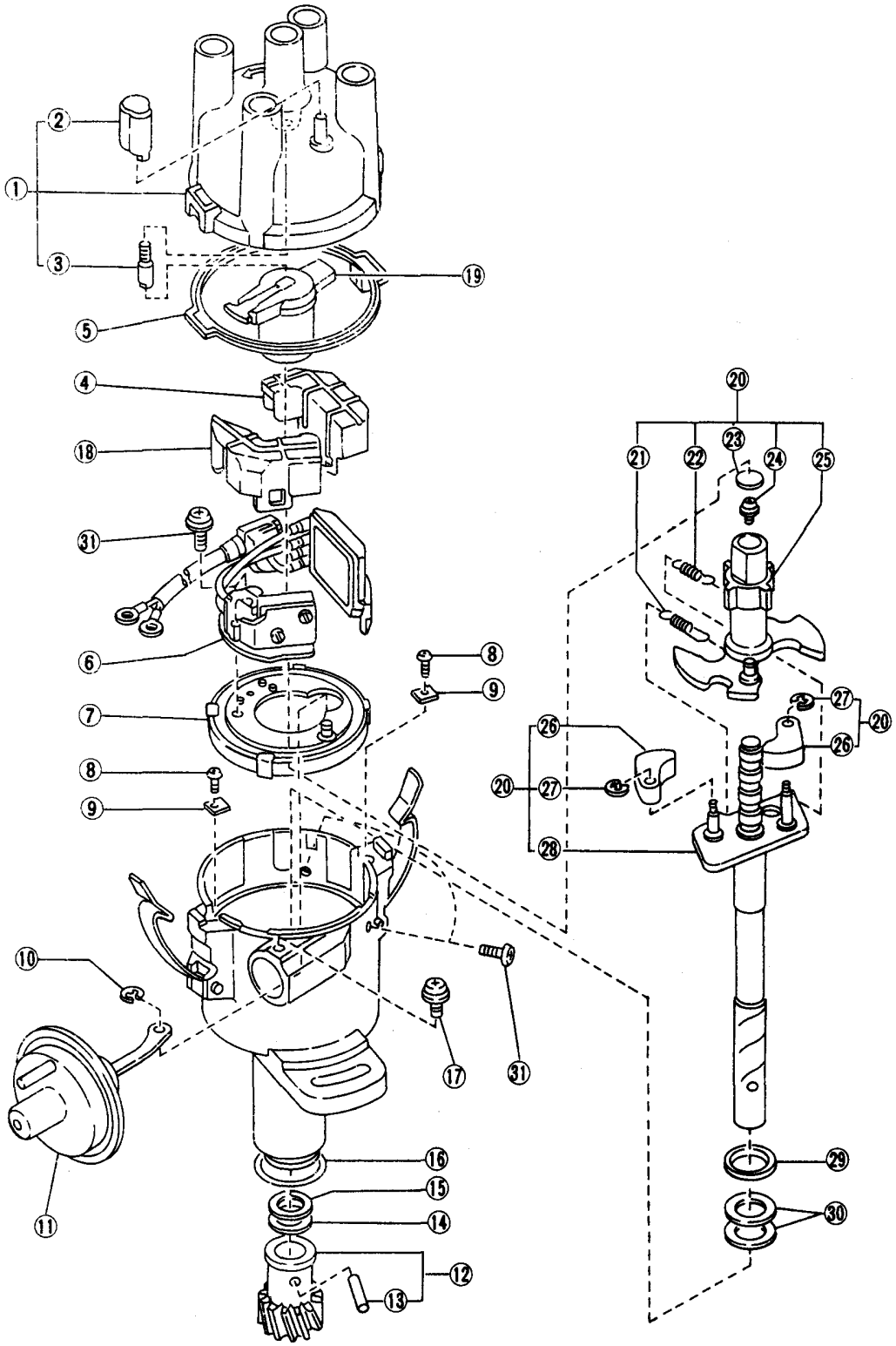

1 Distributor cap ASSY
2 Rubber cap
3 Carbon point CP
4 Dust proof cover
5 Dust proof packing
6 Pick-up coil set
7 Plate CP
8 Screw
9 Plate
10 Snap ring
11 Vacuum controller ASSY
12 Pinion set
13 Straight pin
14 Thrust washer
15 Thrust washer
16 O-ring
17 Screw & washer
18 Dust proof cover
19 Distributor rotor
20 Shaft & governor ASSY
21 Spring B
22 Spring A
23 Cam cap
24 Screw & washer
25 Signal rotor sub-ASSY
26 Governor weight
27 Snap ring
28 Distributor shaft ASSY
29 Washer
30 Thrust washer
31 Screw & washer

Fig. 15-94

Downloaded from www.Manualslib.com manuals search engine

2. 4WD vehicles (HITACHI)

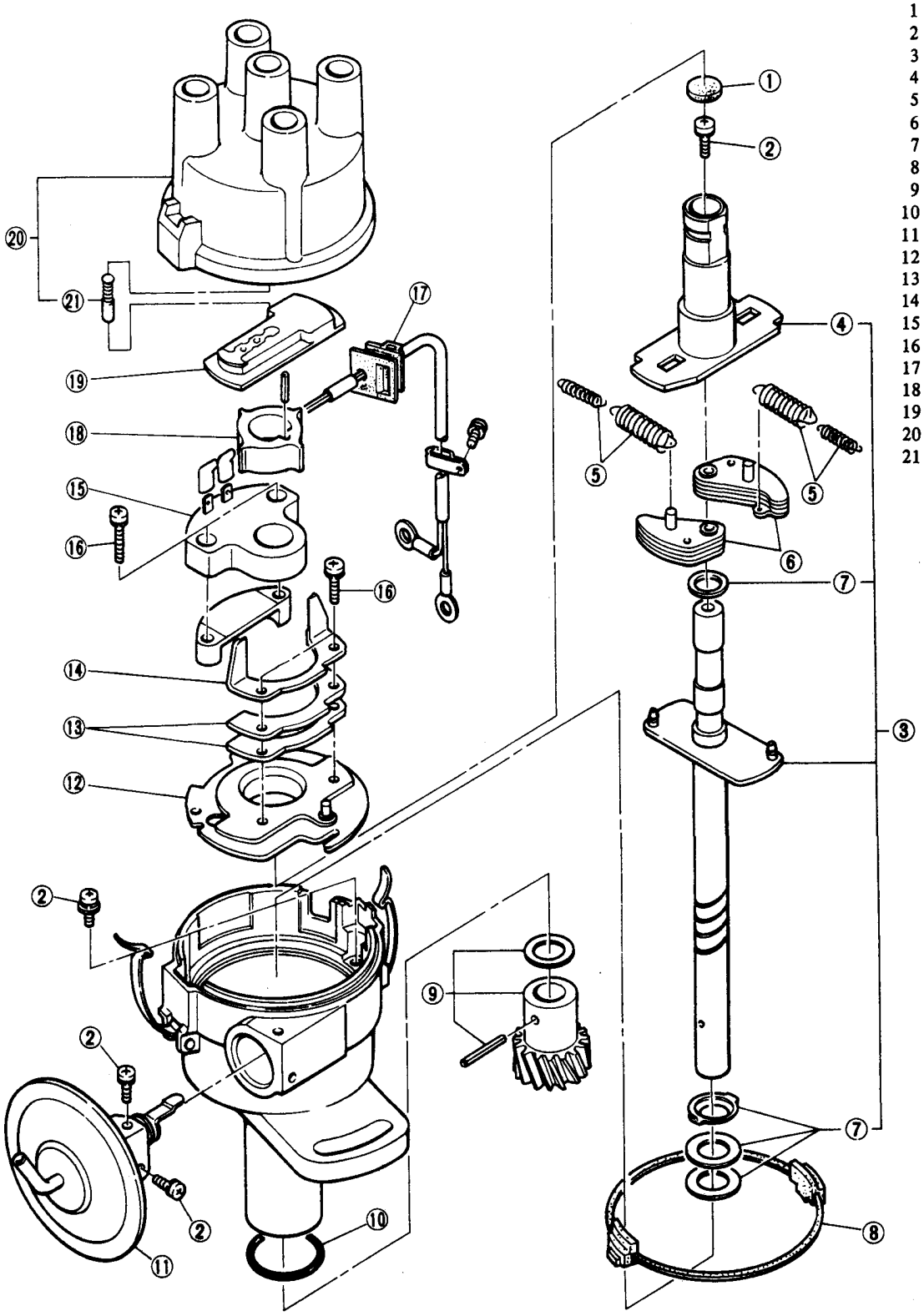

Fig. 15-95

Downloaded from www.Manualslib.com manuals search engine

2) Characteristic Curve

CENTRIFUGAL ADVANCER

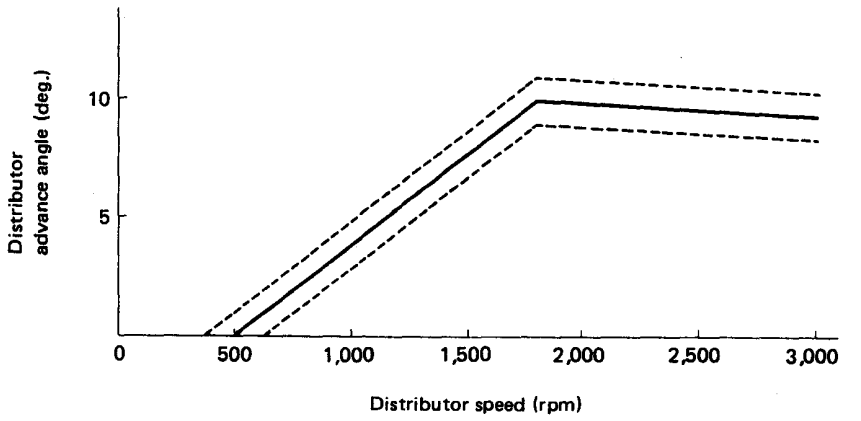

VACUUM ADVANCER

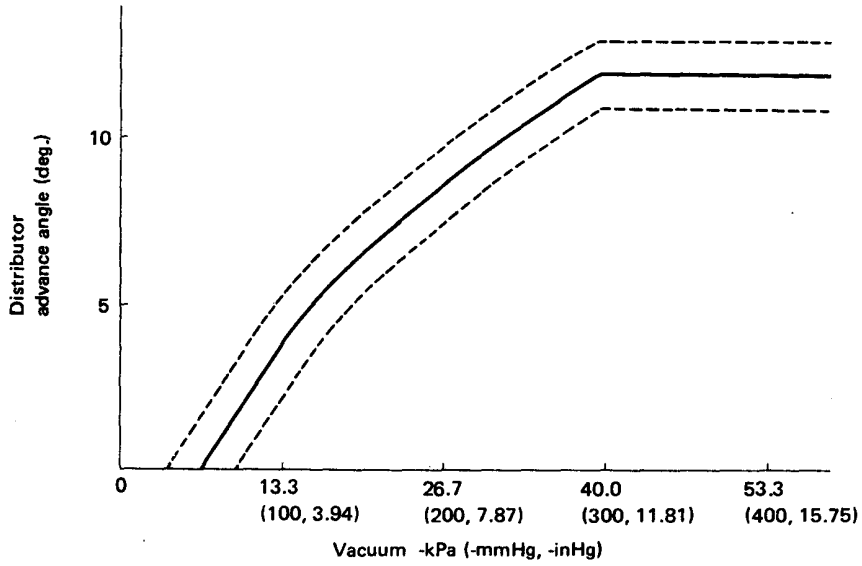

Fig. 15-96

2. Repair for All Models Except 4WD (NIPPONDENSO)

1. Disassembly

1) Cap rotor and dust proof packing.
2) Snap ring clip, screw and vacuum controller.
3) Two dust covers.
4) Two screws and pick-up coil.

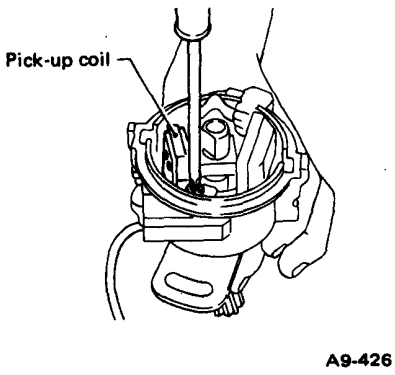

Fig. 15-97

5) Two screws and ignition control unit.

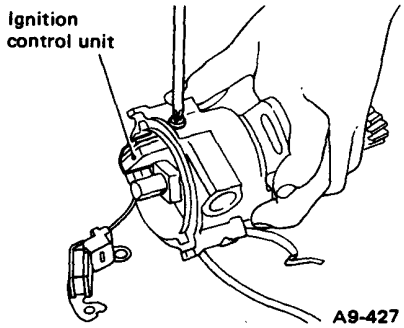

Fig. 15-98

Downloaded from www.Manualslib.com manuals search engine

6) Remove the breaker plate by removing two screws.
7) Drill the end of staked straight pin, then tap out straight pin and remove the pinion.

NOTE:
When removing the pinion, replace the pinion and straight pin with new one.

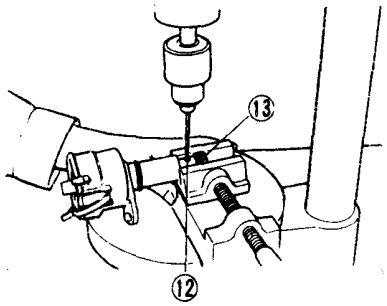

A9-325

Fig. 15-99

8) Remove the shaft and governor assembly from housing.

NOTE:
When removing the shaft from housing, tap the end of governor shaft lightly by a plastic hammer if necessary.

9) Governor spring by using a long nose pliers.

NOTE:
Do not extend the spring too much.

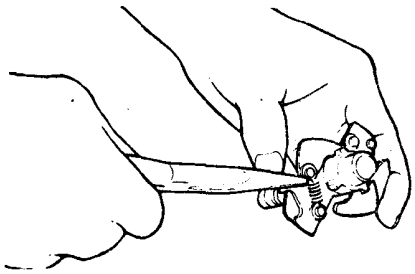

A9-137

Fig. 15-100

10) Remove the cam cap and disassemble the reluctor from the distributor shaft by removing a screw.
Disassemble two governor weights.

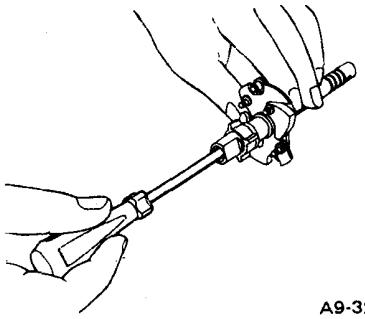

A9-327

Fig. 15-101

11) Disassemble two governor weights by removing two snap ring clips. Remove a screw and disassemble reluctor from the distributor shaft.

2. Inspection

Inspect the following items.
1) Inspect the O-ring on the distributor housing for damage.
2) Inspect the governor springs for wear and damage.
3) Inspect diaphragm in the vacuum controller for breakage.

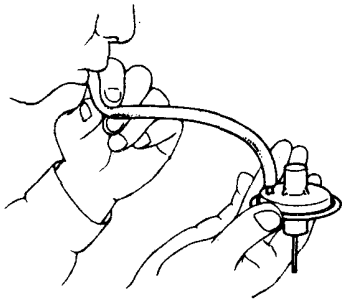

A9-382

Fig. 15-102

4) Inspect cap and rotor for crack, damage, corrosion, erosion and spring action of carbon point.

Carbon point length	
Standard	12 mm (0.47 in)

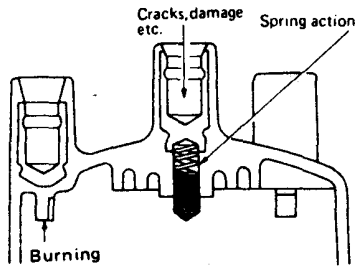

A9-112

Fig. 15-103

3. Assembly

Assembly is the reverse of disassembly, however, when assembling the distributor, pay attention to the following items.
1) Reluctor
When assembling the cam, match the "11.0" mark on the plate and stopper through the hole in the distributor shaft.

NOTE:
Pack distributor grease into inside of the reluctor.

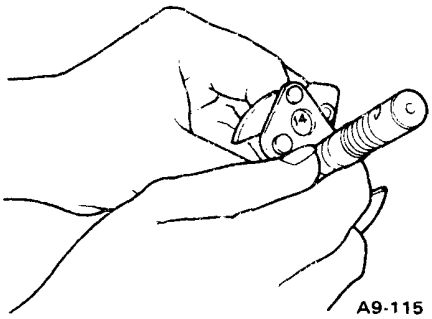

A9-115

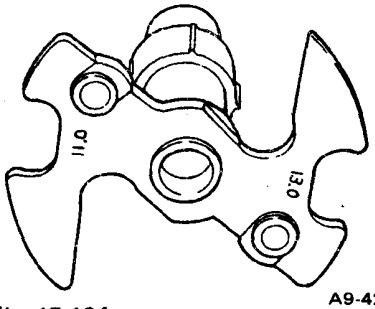

A9-428

Fig. 15-104

2) Governor
When installing the shaft and governor assembly in the housing, coat engine oil on the shaft.

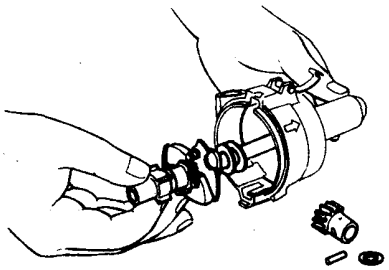

A9-326

Fig. 15-105

3) Pinion
When installing the pinion, adjust the clearance between housing and pinion to specified value with the thrust washers.

Downloaded from www.Manualslib.com manuals search engine

Clearance	0.1 – 0.3 mm (0.004 – 0.012 in)

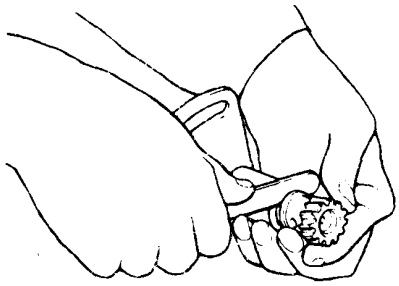

Fig. 15-106

4) Contact breaker plate

Temporarily install the pick up coil onto the contact breaker plate. Install the breaker plate by aligning the four clips of the contact breaker plate with the grooves of the housing.

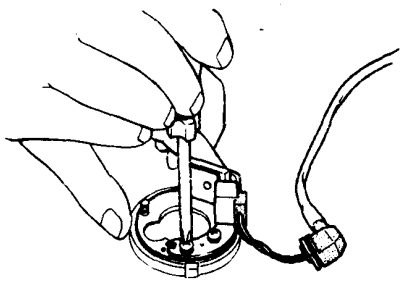

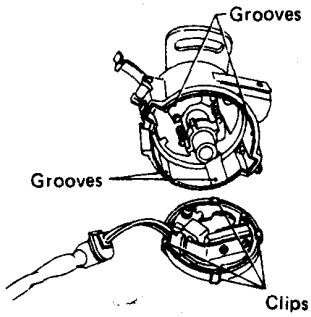

Fig. 15-107

5) Control unit

Using two screws, install the control unit.

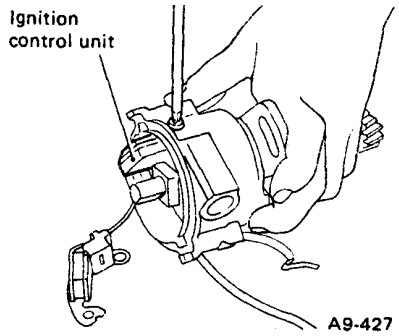

Fig. 15-108

6) Pick-up coil set

After adjusting the air gap between the reluctor and pick-up coil core to the specified value, tighten pick-up coil set installing screws.

Air gap	0.2 – 0.4 mm (0.008 – 0.016 in)

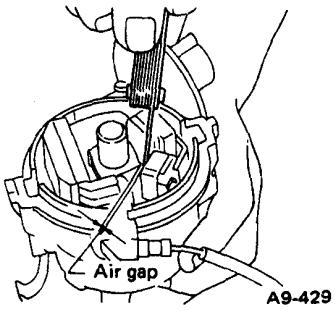

Fig. 15-109

7) Install the dust cover to the pick-up coil and control unit.

8) Install the vacuum controller.

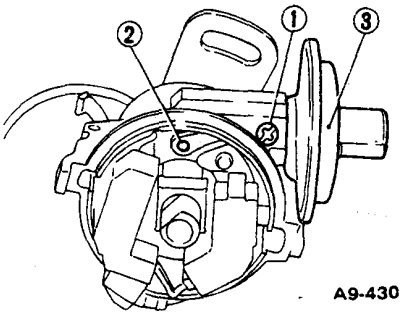

1 Screw
2 Snap ring
3 Vacuum controller

Fig. 15-110

9) Install the dust proof packing, rotor and cap.

Inspection After Assembly

a. Governor operation.

(1) The governor shaft must the turned lightly when turning the pinion.

(2) The rotor must be back lightly to its original position when turning the rotor to left and release it.

(Hold the pinion during this inspection as shown in figure.)

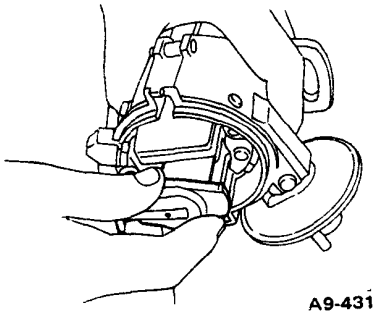

Fig. 15-111

3. Repair for 4WD Vehicles (HITACHI)

1. Disassembly

a. Remove cap and rotor.

b. Remove vacuum controller by loosening screw.

c. Disconnect electric wire from ignition control unit, and take out the wire with rubber seal.

d. Removal of pinion.

(1) Drive out the straight pin.

(2) Remove the pinion gear and thrust washers.

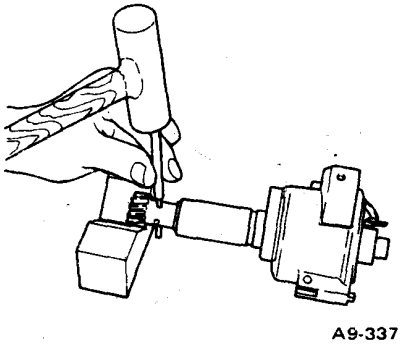

Fig. 15-112 Removing pinion

e. Removal of pick-up coil base and shaft and governor assembly.

(1) Remove pick-up coil base installing screws.

Downloaded from www.Manualslib.com manuals search engine

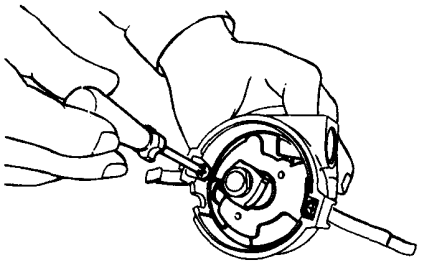

A9-338

Fig. 15-113

(2) Draw out the pick-up coil base and shaft and governor assembly.

f. Removal of shaft and governor assembly.

(1) Remove the dust proof packing on top of the shaft.

(2) Remove the screw on top of the shaft.

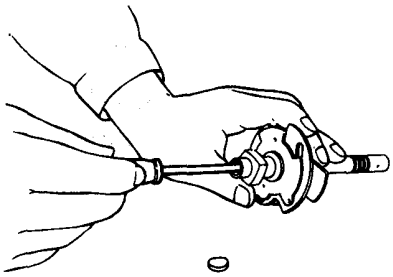

A9-340

Fig. 15-114

(3) Remove the shaft and governor assembly.

g. Removal of weights and springs.

In order to facilitate the installing job, put a match mark on each part before disassembly.

2. Inspection

a. Cap

Inspect the cap for crack, damage, corrosion, erosion and spring action of the carbon point. Clean the inside of the cap periodically with gasoline.

b. Rotor

(1) Inspect the rotor for breaks, cracks, carbon tracks or burns.

(2) Replace the rotor if it is corroded or damaged. When a new rotor is used, coat the blade with silicone dielectic compound.

c. Air gap

Inspect air gap.

Air gap	0.3 – 0.5 mm (0.012 – 0.020 in)

Adjust the air gap by loosening the stator core installing screw if necessary.

d. Vacuum controller.

(1) Inspect the inlet pipe connecting part.

(2) Inspect air leakage through the diaphragm. If air is leaking, replace the vacuum controller assembly.

(3) Inspect the pick-up coil base for movement, and if operation is bad, replace the contact breaker assembly.

e. Governor.

Inspect the shaft and governor assembly operation.

Characteristics of the centrifugal and vacuum advance are as follows.

Vacuum advance angle [Degree/kPa (mmHg, inHg)]	0°/6.7 (50, 1.97) 12°/40.0 (300, 11.81)
Centrifugal advance angle (Degree/Distributor rpm)	0°/500 2.5°/925 10°/1800

3. Assembly

Assembly is the reverse of disassembly; however, pay attention to the following items.

1) Rotor assembly

Be sure to match the notch "A" in the ignition control unit base and groove "B" of the housing as shown in figure.

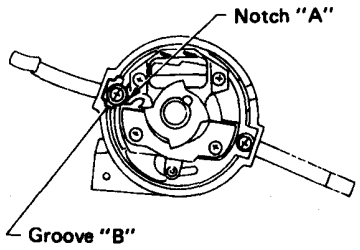

A9-387

Fig. 15-115

2) Install the pinion set.

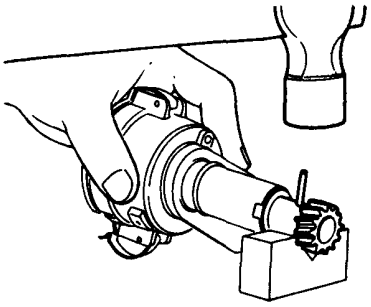

A9-344

Fig. 15-116

3) Vacuum controller.

(1) Tighten only the screw that attaches the vacuum controller to the housing.

(2) Tighten the connecting screw between vacuum controller lever and ignition control unit base.

4) Stator core

(1) Adjust the air gap between the reluctor and stator core to the specified value.

Air gap	0.3 – 0.5 mm (0.012 – 0.020 in)

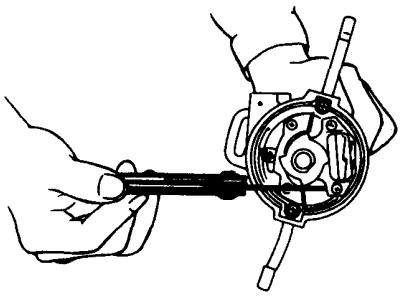

A9-388

Fig. 15-117

(2) Bend the calmp at the end of the vacuum controller lever so that the lead wire moves loosely.

Downloaded from www.Manualslib.com manuals search engine

5) Pinion gear.

(1) Position the rotor shaft so that the notch "A" faces the pole piece "B" as shown in figure.

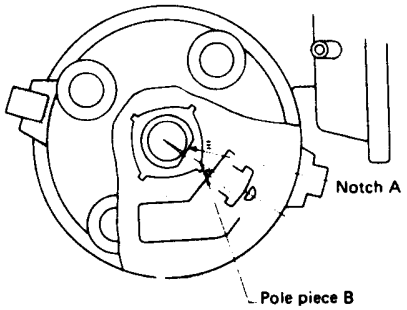

Fig. 15-118

(2) Match the match mark "A" on the pinion gear with the notch "B" at the lower end of housing.

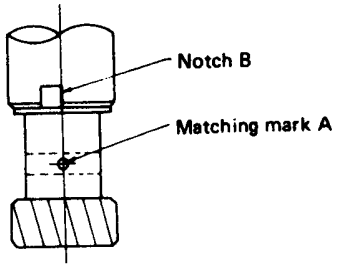

Fig. 15-119

NOTE:
After completion of assembly, check the centrifugal advancing characteristics by using a distributor tester.

15-6. Ignition Coil and Spark Plug

1. Ignition Coil

1) Removal and Installation

1) Disconnect the battery negative (–) terminals.
2) Disconnect the wires from the ignition coil.
3) Remove ignition coil.
4) To install, reverse the order of removal.

NOTE:
Be sure to connect the wires to their proper positions. Failure to do so will damage the unit.

2) Inspection

Using an accurate tester, inspect the following items, and replace if defective.

1) Primary resistance
2) Secondary coil resistance

NOTE:
If the resistance is extremely low, this indicates the presence of a short-circuit.

3) Insulation between the primary terminal and case: 10MΩ or more.

4) If the engine does not run due to faulty ignition system, check the ignition system as follows:

Check for a cracked distributor rotor or cap and corroded terminals.

Visually inspect the high tension wire for condition. Check spark plugs and adjust gaps as necessary. Replace the spark plug which is not suitable for further use.

If the above checks cannot correct the problem, check the entire ignition system with an oscilloscope or a circuit tester in accordance with the troubleshooting charts at the end of this chapter.

2. Spark Plug

1) Description

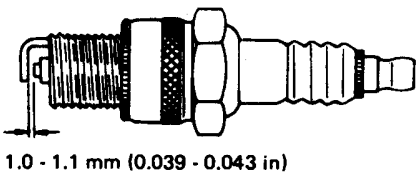

Fig. 15-120 Spark plug

The spark plugs are project type, having 14 mm (0.551 in) threads and 1.0 – 1.1 mm (0.039 – 0.043 in) gap.

NOTE:
All spark plugs installed on an engine, must be of the same heat range.

Applicable model	Spark plug
U.S.A.	NGK: BPR6ES–11 (or BPR5ES–11, BPR7ES–11) NIPPONDENSO: W20EPR–U11 (or W16EPR–U11, W22EPR–U11) CHAMPION: RN11YC–4 (or RN9YC–4)
Canada	CHAMPION: RN11YC–4 (or RN9YC–4)

Downloaded from www.Manualslib.com manuals search engine

2) Removal and Installation

1) Remove the spark plug cords by pulling the boot, not the cord itself.
2) Remove spark plugs.
3) When installing the spark plugs on the cylinder head, use a spark plug wrench.

Torque (Spark plug)	20 – 29 N·m (2 – 3 kg-m, 14 – 22 ft-lb)

NOTE:
The above torque should be only applied to new spark plugs without oil on their threads.
In case their threads are lubricated, the torque should be reduced by approximately 1/3 of the specified torque in order to avoid their overstressing.

4) Connect the spark plug cords.

3) Inspection

1) Check the electrodes and inner and outer porcelains of plugs, noting the type of deposits and the degree of electrode erosion.

- Normal
  Brown to grayish-tan deposits and slight electrode wear indicate correct spark plug heat range.

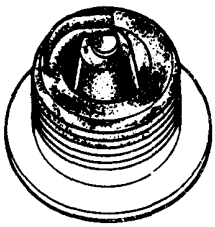

A9-164

Fig. 15-121 Normal

- Carbon fouled:
  Dry fluffy carbon deposits on insulator and electrode are mostly caused by slow speed driving in city, weak ignition, too rich fuel mixture, dirty air cleaner, etc.
  It is advisable to replace with plugs having hotter heat range.

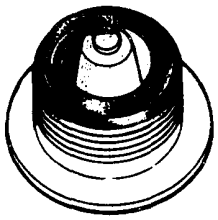

A9-165

Fig. 15-122 Carbon fouled

- Oil fouled:
  Wet black deposits show excessive oil entrance into combustion chamber through worn rings and pistons or excessive clearance between valve guides and stems. If same condition remains after repair, use a hotter plug.

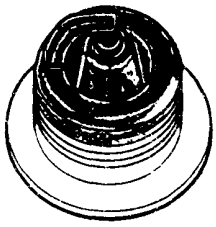

A9-166

Fig. 15-123 Wet spark plug with oil

- Overheating:
  White or light gray insulator with black or gray brown spots and bluish burnt electrodes indicate engine overheating. Moreover, the appearance results from incorrect ignition timing, loose spark plugs, wrong selection of fuel, hotter range plug, etc. It is advisable to replace with plugs having colder heat range.

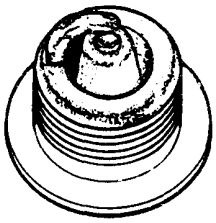

A9-167

Fig. 15-124 Overheating

4) Cleaning and Regapping

Clean spark plugs in a sand blast type cleaner.

Avoid excessive blasting. Clean and remove carbon or oxide deposits, but do not wear away porcelain.

If deposits are too stubborn, discard plugs.

After cleaning spark plugs, recondition firing surface of electrodes with file. Then correct the spark plug gap to 1.0 to 1.1 mm (0.039 to 0.043 in) using a gap gauge.

Downloaded from www.Manualslib.com manuals search engine

15-7. Combination Meter

A. CONVENTIONAL TYPE

1. Summary

- **Component parts**

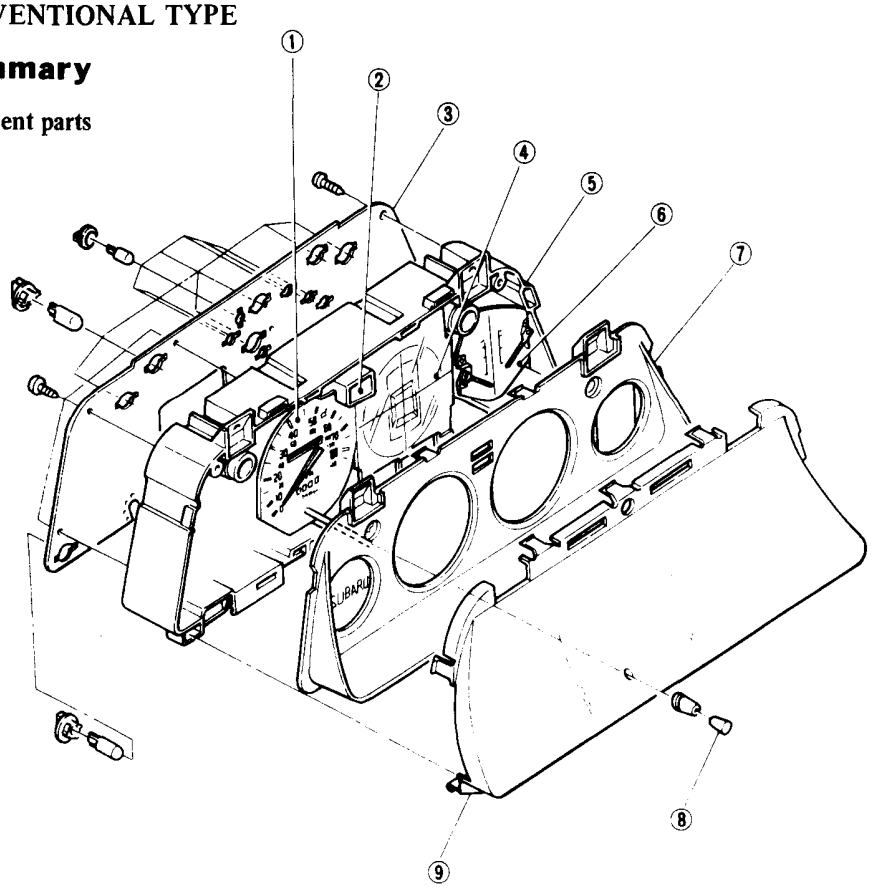

1 Speedometer, Odometer and Trip meter
2 Oil pressure indicator light and Charge indicator light
3 Printed circuit board
4 Telltale (Graphic monitor)
5 Combination meter case
6 Fuel gauge and Temperature gauge
7 Window plate
8 Trip meter reset knob
9 Meter glass

A25-503

Fig. 15-125 STD & DL models

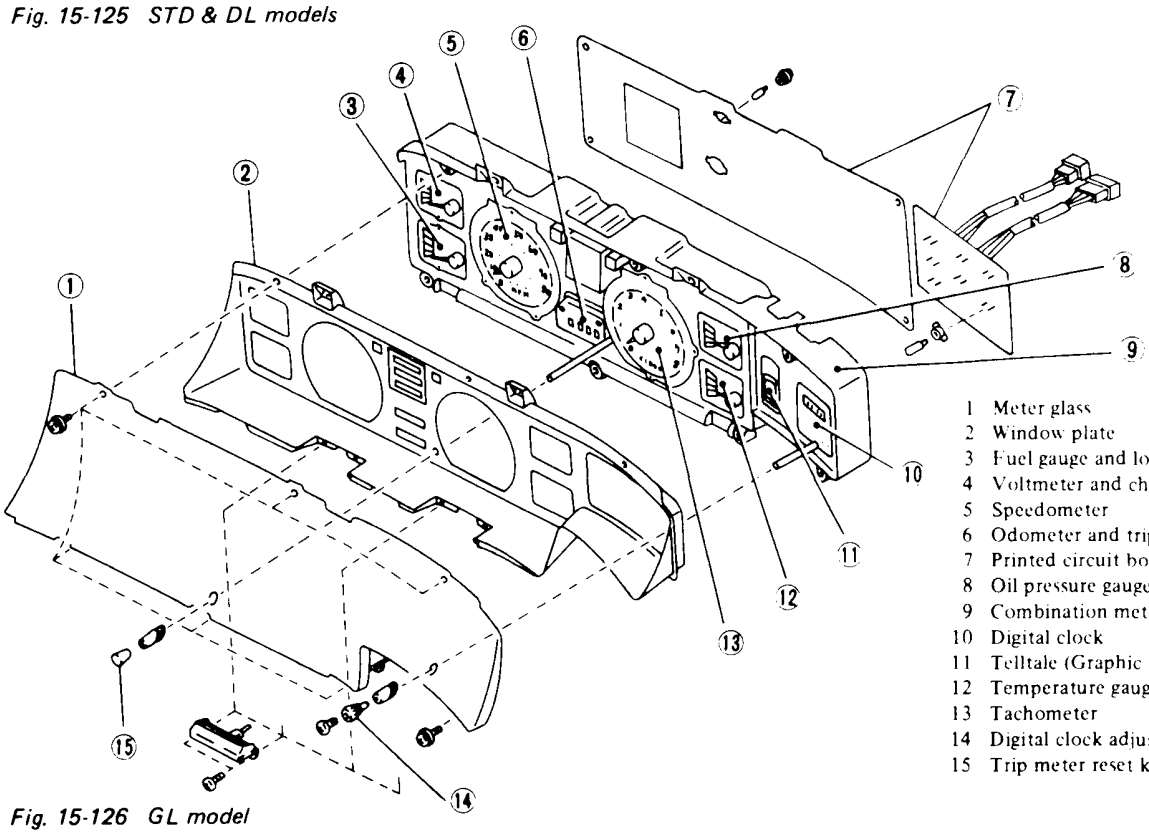

1 Meter glass
2 Window plate
3 Fuel gauge and low fuel indicator light
4 Voltmeter and charge indicator light
5 Speedometer
6 Odometer and trip meter
7 Printed circuit board
8 Oil pressure gauge
9 Combination meter case
10 Digital clock
11 Telltale (Graphic monitor)
12 Temperature gauge
13 Tachometer
14 Digital clock adjusting knob
15 Trip meter reset knob

A25-766

Fig. 15-126 GL model

Downloaded from www.Manualslib.com manuals search engine

- **Warning and indicator lights**

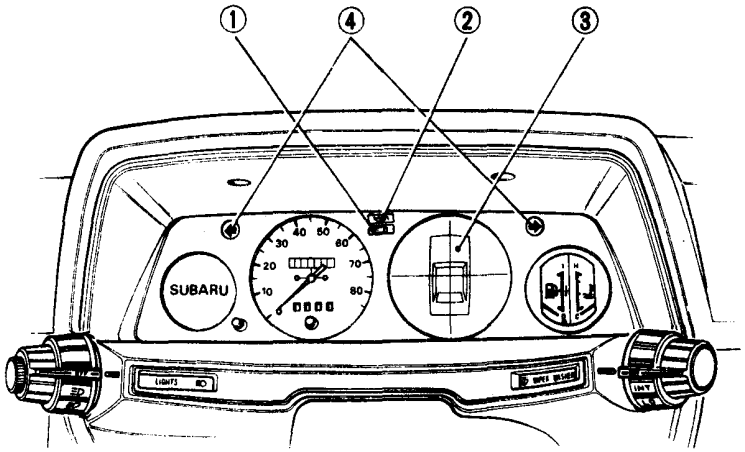

1 Charge indicator light
2 Oil pressure indicator light
3 Telltale (Graphic monitor)
4 Turn signal light

A25-767

Fig. 15-127 STD & DL models

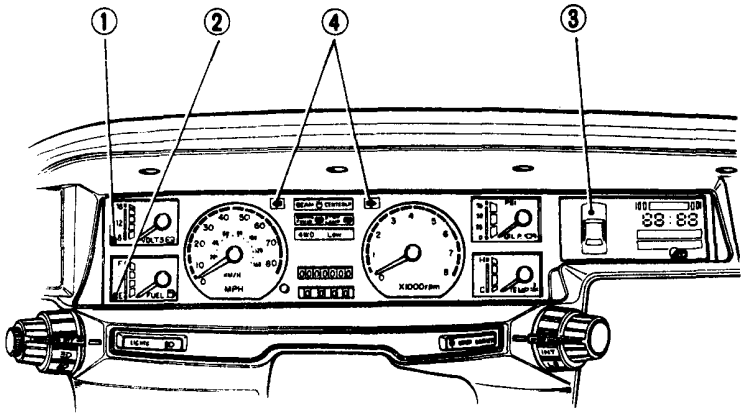

1 Charge indicator light
2 Low fuel indicator light
3 Telltale (Graphic monitor)
4 Turn signal light

A25-768

Fig. 15-128 GL model

1) Charge Indicator Light

The light indicates the alternator and charging system operating condition.
If there is something wrong with the alternator and charging system, the light will come on while the engine is running.

2) Oil Pressure Indicator Light

Oil pressure indicator light indicates whether or not oil pump is feeding oil under normal pressure to various parts of engine.
Indicator light is operated by oil pressure switch located in lubricating system.

3) Low Fuel Indicator Light

The indicator light is operated by thermistor incorporated in fuel unit on fuel tank, and goes on when amount of gasoline in fuel tank is less than the specified volume as shown below.

Unit: ℓ (US gal, Imp gal)

4WD	Hatchback	6.75 (1.8, 1.5)
	Others	8.25 (2.2, 1.8)
Except 4WD	Hatchback	7.5 (2.0, 1.7)
	Others	9.0 (2.4, 2.0)

Downloaded from www.Manualslib.com manuals search engine

4) Telltale (Graphic Monitor)

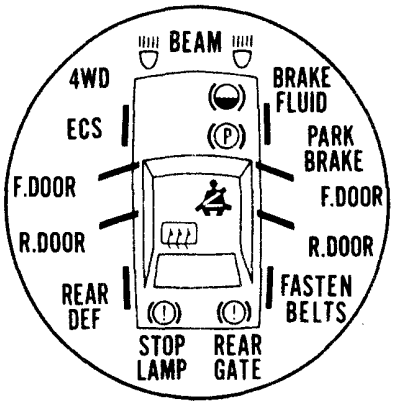

OM-1142

Fig. 15-129 Telltale (Graphic monitor)

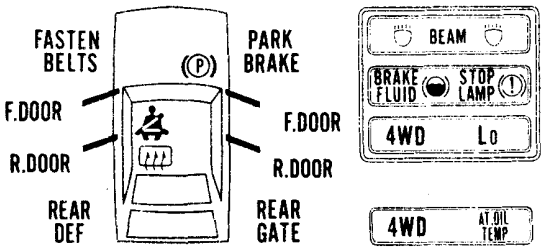

A25-811

According to the ignition-starter switch position, each light will come on and/or go off under normal conditions as follows:

Ignition-starter switch position		OFF	ACC	ON	ST	While engine is running
1. Headlight beam indicator light	High-beam	OFF	OFF	ON	ON	ON
	Low-beam	OFF	OFF	OFF	OFF	OFF
2. Brake fluid level warning light		OFF	OFF	ON	ON	OFF
3. Door ajar warning light	Open	OFF	OFF	ON	ON	ON
	Shut	OFF	OFF	OFF	OFF	OFF
4. Fasten seat belt warning light		OFF	OFF	○	○	OFF
5. Rear gate ajar warning light	Open	OFF	OFF	ON	ON	ON
	Shut	OFF	OFF	OFF	OFF	OFF
6. Stop light warning light		OFF	OFF	ON	ON	OFF
7. Parking brake warning light	Engage	OFF	OFF	ON	ON	ON
	Disengage			ON	ON	OFF
8. Four wheel drive indicator light (4WD and LO)	Engage	OFF	OFF	ON	ON	ON
	Disengage			OFF	OFF	OFF
9. 4WD-AT fluid temperature warning light		OFF	OFF	ON	ON	OFF
10. Rear defogger indicator light	Engage	OFF	OFF	ON	ON	ON
	Disengage			OFF	OFF	OFF
11. ECS warning light		OFF	OFF	●	●	OFF

Symbols used: ○ Light comes on only for 6 seconds.
● Light comes on before engine starts, but goes off after engine stops.

Downloaded from www.Manualslib.com manuals search engine

5) Brake Fluid Level Warning Light

The light is connected to the brake fluid level sensor that is incorporated in brake fluid reservoir cap.
If brake fluid decreases to less than the specified volume in the reservoir, the sensor is actuated and the light comes on while the engine is running.

Total brake fluid volume in reservoir	180 cm³ (180 cc, 10.98 cu in)
Remaining volume when brake fluid level warning light glows	Approx. 90 cm³ (90 cc, 5.49 cu in)

NOTE:

a. For checking if bulb of brake fluid level warning light is burned out, make sure that the warning light glows when ignition-starter switch is initially turned to "ON" and it goes out when engine is running.

b. If brake fluid reservoir is inclined or vibrated abnormally, the warning light may be lighted momentarily even fluid level is above the specified limit.

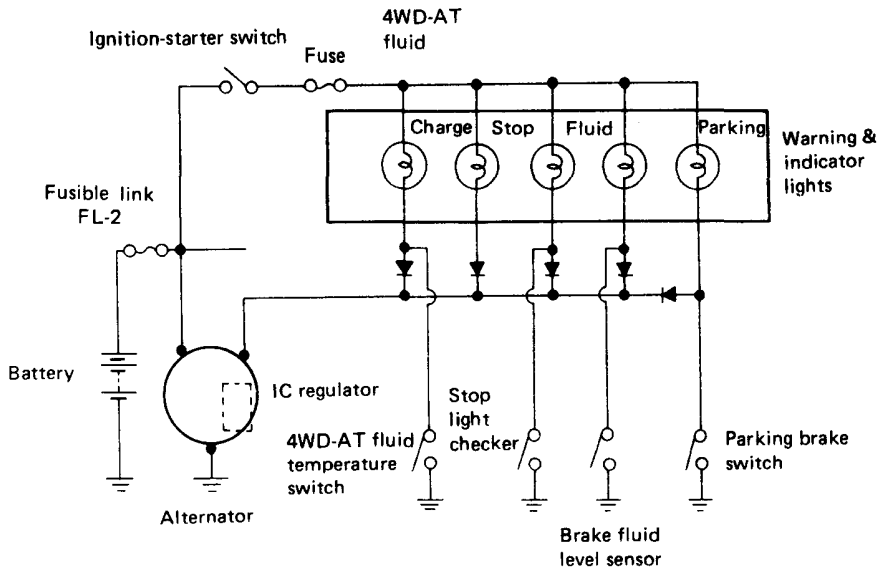

A25-769

Fig. 15-130

6) Stop Light Warning Light

The light is connected to the stop light checker. This checker consists of a reed switch and magnet coils ① and ②, as shown in figure. Under normal conditions, the magnetic fields are generated in the magnet coils ① and ② by the current flowing through each lamp while the stop lamp switch is ON. These magnetic fields cancel each other because the coils turn in directions opposite to each other. As a result, the reed switch will remain OFF, and the warning light is OFF. If either the left or right hand side stop lamp fails, current will flow through only one magnet coil, and the resultant magnetic field causes the reed switch to turn ON. Therefore, the warning light will remain lighted as long as the brake pedal is depressed.

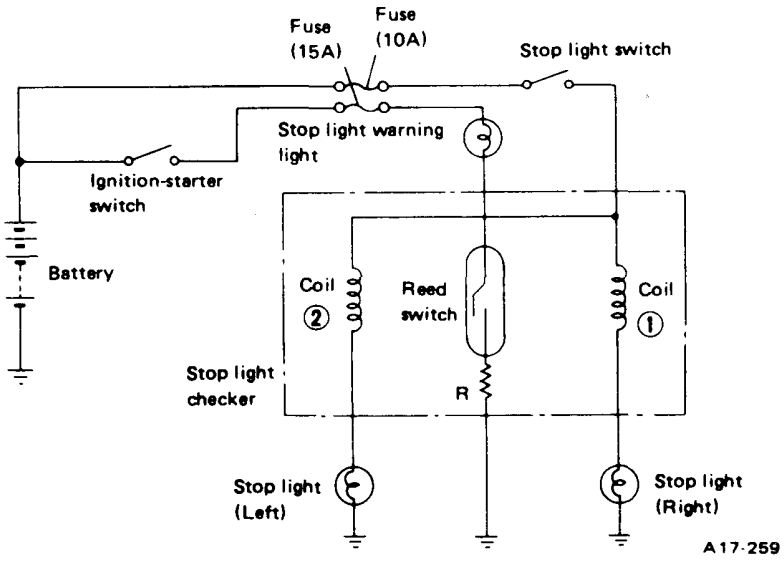

A17-259

Fig. 15-131

Downloaded from www.Manualslib.com manuals search engine

7) Parking Brake Warning Light

The warning light is activated by means of the parking brake switch installed on the parking brake lever.

NOTE:
For checking if the bulb is burned out, make sure that the warning light glows when ignition-starter switch is turned to "ON" and it goes out when the engine is started with the parking brake released.

8) 4WD-AT Fluid Temperature Warning Light

The warning light is provided for the purpose of preventing overheating of torque converter fluid in case of repeated start-off operations in sand or on a snowy road, or when the car is operated at very low speed (near the stall speed) continuously under heavily loaded conditions.
If the temperature of the fluid at the torque converter outlet exceeds 150°C (302°F), the warning lamp "AT OIL TEMP" will illuminate and warn the driver of high oil temperature.
In such a case, the driver need not stop the car, but should avoid undue operation. The warning light will go out as the fluid temperature drops.
The thermoswitch is installed on the side of the extension case.

9) ECS Warning Light

The warning light is provided for the purpose of indicating the condition of the electronically controlled carburetor system. If the electronically controlled carburetor system is faulty, the warning light will come on while the engine is running. For trouble-shooting, refer to the chapter titled "Emission Control System".

2. Removal and Installation

NOTE:
a. Be sure to disconnect earth cable from negative (minus) terminal of battery previously.
b. It is recommended to remove bolts securing steering column and pull it down.

1) Remove screws securing combination meter visor, and take out it after disconnecting electric wires at connectors.

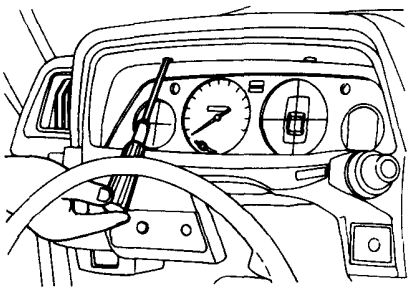

A25-246

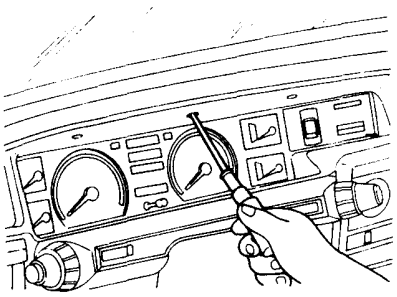

A25-556

Fig. 15-132 Taking out meter visor

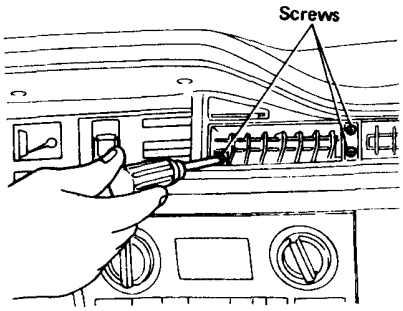

A25-557

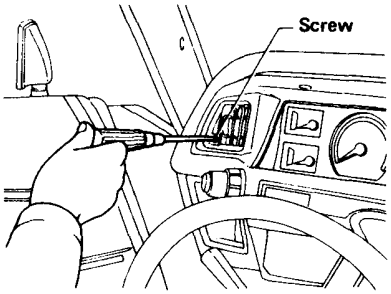

A25-558

Fig. 15-133 Removing screw (GL model)

NOTE:
For GL models take out center ventilator control level by pulling it.

2) Remove screws installing combination meter.

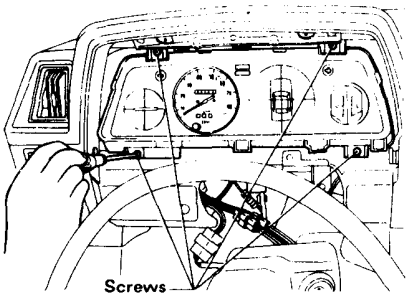

A25-250

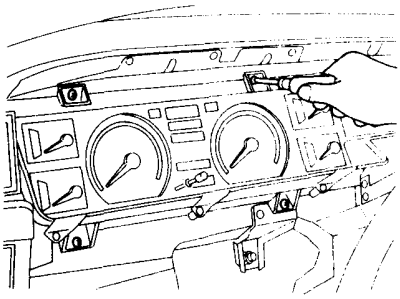

A25-559

Fig. 15-134 Removing screws

3) Pulling combination meter out a little, disconnect speedometer cable and electric wires from backside of combination meter.
4) Take out combination meter from instrument panel.
5) Installation is in the reverse order of removal.

NOTE:
Be sure to connect speedometer cable and electric wires to backside of combination meter.

3. Disassembly & Assembly

1) Remove following parts from combination meter.
- Trip meter reset knob
- Digital clock adjuster knob
- Meter glass
- Window plate

2) Remove screws and/or nuts, and take out meter, gauge, etc.

Downloaded from www.Manualslib.com manuals search engine

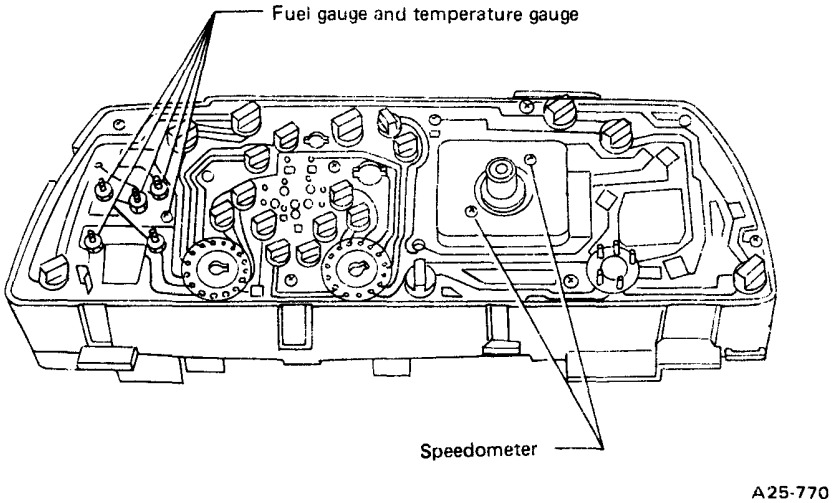

Fig. 15-135 STD & DL models

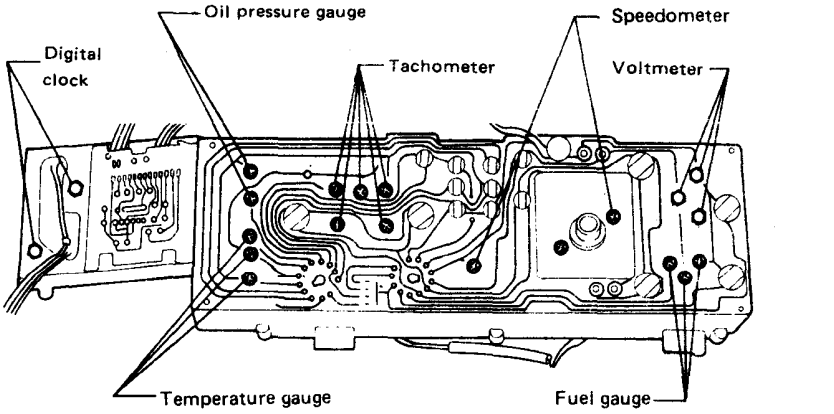

Fig. 15-136 GL model

CAUTION:

a. Take care not to damage removed speedometer, tachometer etc.

b. Avoid disassembling indicator & warning lights.

3) Take out printed circuit board.

4) Assembly is in the reverse order of disassembly.

4. Inspection

1) Speedometer

It is normal if the readings of speedometer are within the tolerances shown in the following table, against the standard indicated speeds on the speedometer tester.

Besides, speedometer should point 60 km/h (60 MPH) when meter drive shaft speed in 637 rpm (1,020 rpm).

If pointer swing beyond the limit, inspect speedometer cable and its installed condition.

Standard indicated speed (km/h or MPH)		20	40	60	80
Readings of speedometer	(km/h)	29 – 34	60 – 65	92 – 97	123 – 129
	(MPH)	18 – 21	37.5 – 40.5	57 – 60	76.5 – 80

2) Temperature Gauge

Temperature gauge (bimetal type) is operated by thermistor incorporated in temperature sending unit installed in intake manifold.

Since thermistor resistance changes with voltage, voltage regulator is provided to prevent error in gauge indication due to voltage fluctuation.

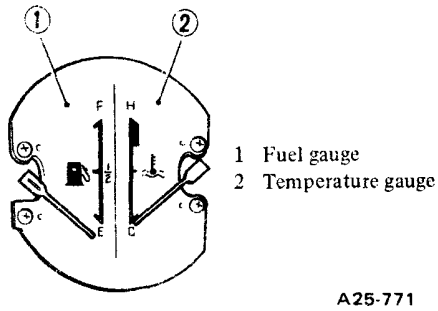

Fig. 15-137 Temperature gauge and fuel gauge

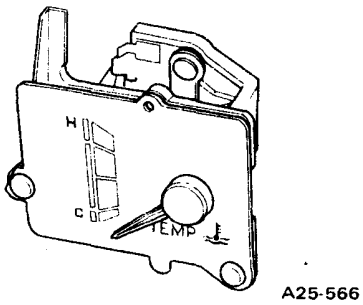

Fig. 15-138 Temperature gauge (GL & GLF models)

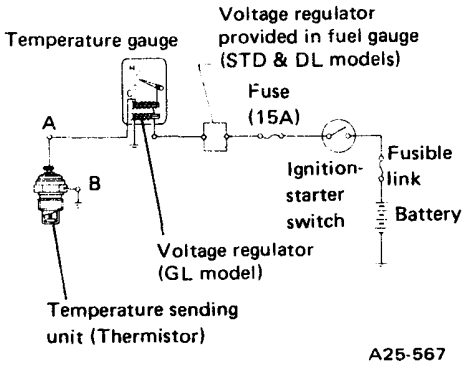

Fig. 15-139 Circuit of temperature gauge

It is normal if the readings of temperature gauge are within the tolerances of engine coolant temperature as shown in the following table against the standard resistance between point A and B indicated in the wiring diagram when ignition-starter switch is "ON".

Downloaded from www.Manualslib.com manuals search engine

Readings of temperature gauge	Standard resistance	Temperature of engine coolant	
		STD & DL models	GL model
50°C (122°F)	153.9 Ω	–	43 – 54°C (109 – 129°F)
86°C (187°F)	51.9 Ω	75 – 85.5°C (167 – 186°F)	–
115°C (239°F)	23.6 Ω	100 – 109°C (212 – 228°F)	–
	(18.2 Ω)	–	111.5 – 118.5°C (233 – 245°F)

Besides, standard resistance of temperature gauge is 45 Ω.

For GL model, needle of fuel gauge remains indicating the amount of fuel in fuel tank after turning ignition-starter switch to OFF position.

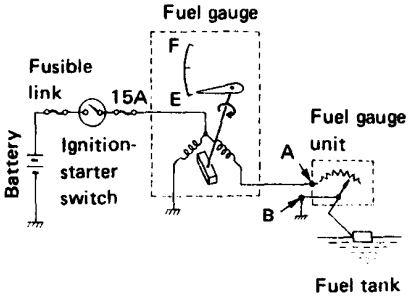

Fig. 15-141 Circuit of fuel gauge (GL model)

3) Fuel Gauge

Fuel gauge (STD & DL models: bimetal type, GL model: cross coil type) is operated by fuel gauge unit installed in fuel tank.
For STD & DL models, voltage regulator is provided in fuel gauge to prevent error in gauge indication due to voltage fluctuation.

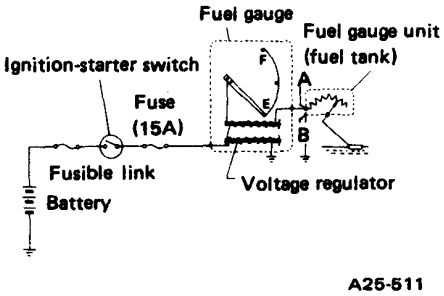

Fig. 15-140 Circuit of fuel gauge (STD & DL models)

It is normal if the readings of fuel gauge are within the tolerances of all length between "E" and "F" as shown in the following table, against the standard resistance between point A and B indicated in the wiring diagram when ignition-starter switch "ON".

Reading of fuel gauge	Standard resistance	Tolerance of fuel gauge	
		STD & DL models	GL model
E	7Ω	±1/25 of all length between "E" and "F"	+1/12 to –1/24 of all length between "E" and "F"
1/2	(32.5Ω)	–	–
F	95Ω	±1/25 of all length between "E" and "F"	+1/24 to –1/12 of all length between "E" and "F"

Besides, standard resistance of fuel gauge in 45Ω.

Downloaded from www.Manualslib.com manuals search engine

4) Tachometer

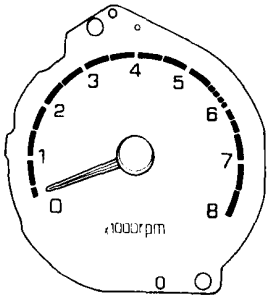

A25-572

Fig. 15-142 Tachometer

It is normal if readings of tachometer are within the tolerances as shown in the following table, against the standard indicated speeds on tachometer tester.
Also, tachometer should point 5,000 rpm when distributor speed is 2,500 rpm.

Standard indicated speed (rpm)	1,000	2,000	3,000	4,000	5,000	6,000
Tolerance (rpm) -20 – 60°C (-4 – 140°F)	940 to 1,090	1,955 to 2,145	2,970 to 3,200	3,980 to 4,250	4,990 to 5,290	6,000 to 6,360

5) Oil Pressure Gauge

Oil pressure gauge (bimetal type) is operated by oil pressure unit (bimetal type) located in lubricating system.

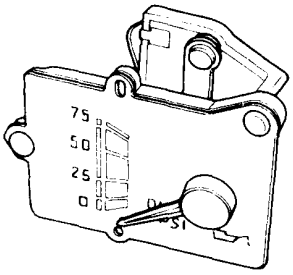

A25-573

Fig. 15-143 Oil pressure gauge

It is normal if the readings of oil pressure gauge are within the tolerances as shown in the following table, against the standard indicated pressure values on oil pressure gauge.

Standard indicated oil pressure values kPa (kg/cm², psi)	172.6 (1.76, 25)
Tolerance kPa (kg/cm², psi) (with current 58 mA)	133.4 – 211.8 (1.36 – 2.16, 19.3 – 30.7)

6) Voltmeter

It is normal if the readings of voltmeter are within the tolerances as shown in the following table, against the standard indicated values on voltmeter.

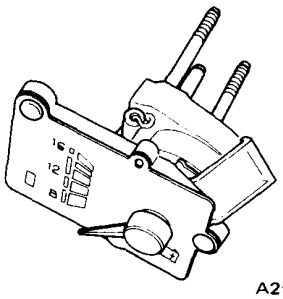

A25-574

Fig. 15-144 Voltmeter

Standard indicated voltmeter values (V)	8	12	16
Tolerance (V)	7.1 – 8.9	11.0 – 12.2	15.3 – 16.2

7) Digital Clock

Figures on hour can be set by turning adjusting knob counterclockwise, and figures on minute by it clockwise. Minutes can be also set to "00" by pushing it fully.

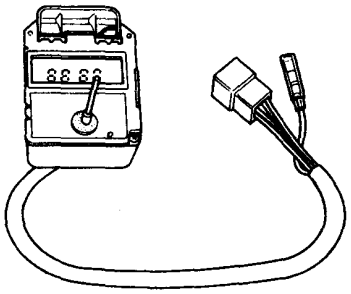

A25-772

Fig. 15-145 Digital clock

NOTE:
Digital clock can be set by operating adjusting knob regardless of ignition-starter switch position.

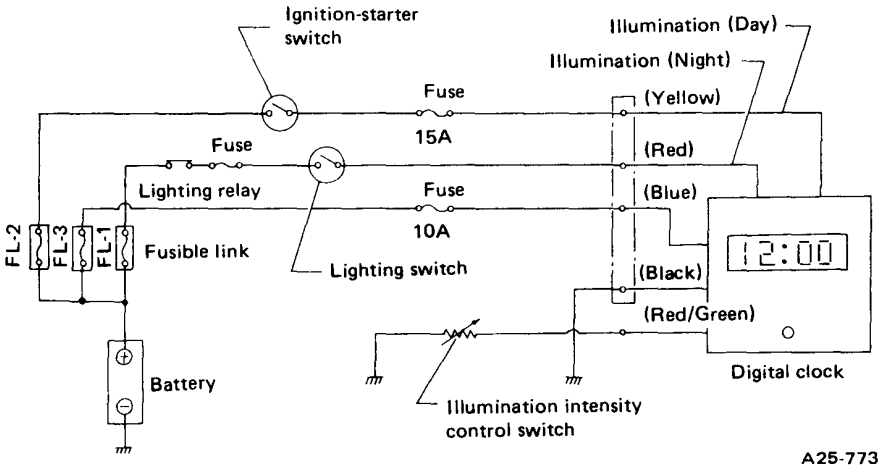

A25-773

Fig. 15-146 Wiring diagram of digital clock

Downloaded from www.Manualslib.com manuals search engine

It is normal if the readings of digital clock are within the tolerances as shown in the following table.

Time tolerance	±1 second/day at 10 – 15 V, 20°C (68°F)
	±3 seconds/day at 12.5 V, -20 – 60°C (-4 – 140°F)

B. DIGITAL TYPE (OPTION)

1. Summary

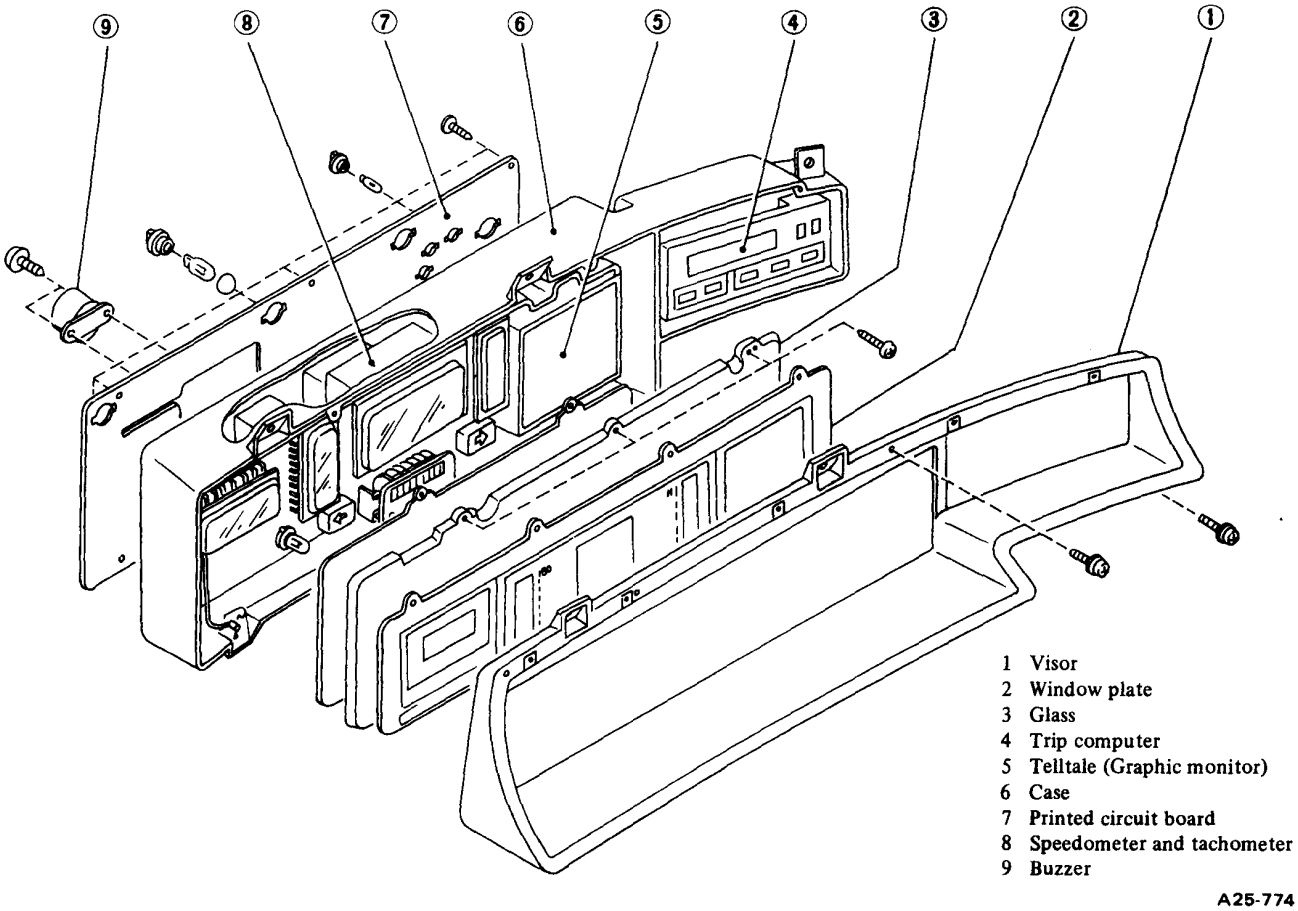

Fig. 15-147

The digital type meter processes the car's speed, engine revolution, remaining fuel, and coolant temperature with its microcomputer and indicates them on the display units using fluorescent display tubes in digits or bar graphs. The meter also contains a trip computer that provides the driver with information on distance travelled, time, and remaining fuel.
The meter consists primarily of two microcomputers: a digital computer unit including a speedometer, tachometer, fuel gauge, and temperature gauge; and a trip computer comprising a display unit and control unit.

• Handling Cautions

1) Even when the ignition-starter switch is turned to ACC or OFF, a feeble current (about 20 mA) flows in the microcomputer memory circuit to keep it operating all the time.
To prevent the battery from running down, the all-time-connection is not connected during shipment. Therefore, it must be connected before the vehicle is delivered to the user. Be sure to connect the green wire (single-pole plug) near the connections between front and instrument panel wiring harnesses under the instrument panel.

Downloaded from www.Manualslib.com manuals search engine

2) When the ignition-starter switch is turned on for the first time after the connection, the meter gives out a buzz sound momentarily, and the speedometer, tachometer, fuel gauge, temperature gauge, trip computer, and warning lights come on. The warning lights go out when the engine starts.
At this time the trip computer displays all the letters and digits of the fluorescent tubes. This is called the test program condition. It occurs when the power supply to memory circuit turns on. To restore the trip computer to the normal condition, press any of the four item buttons of the computer.
If the green wire is not connected as in item 1), the memory circuit power supply turns on each time the ignition-starter switch is turned on. Therefore, the test program is reproduced each time the ignition-starter switch is turned on.

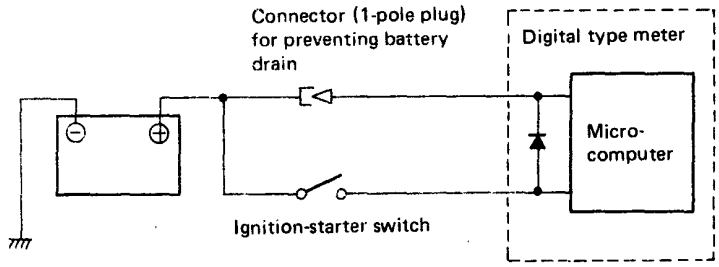

A25-775

Fig. 15-148 Wiring diagram for preventing battery drain

3) When the lighting switch is turned to the first or second step, the meter face is illuminated, and the fluorescent display tubes are dimmed to prevent glare. The meter face brightness is adjustable by the illumination control switch. If this control switch is turned farthest counterclockwise (to the point of Click 2), the meter illumination is the brightest and the fluorescent display tubes are undiminished in brightness. When the lighting switch has to be turned on in the daytime, set the control switch to the click 2 (second click) position.

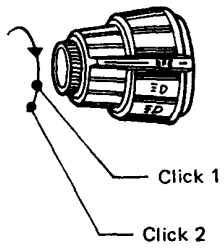

A25-776

Fig. 15-149 Illumination control switch

2. Digital Computer Unit

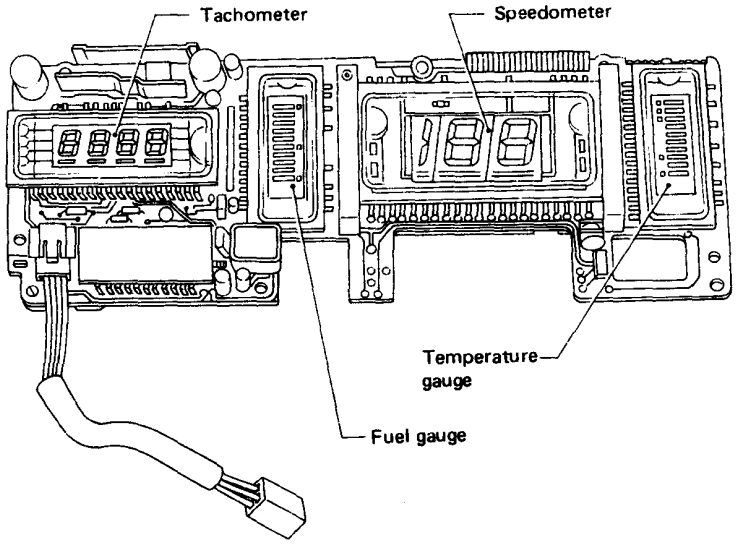

A25-777

Fig. 15-150 Meter display segments

Downloaded from www.Manualslib.com manuals search engine

• Speedometer

1) Specifications

Range of indication	0 to 140 km/h or 0 to 85 MPH (Speed over 140 km/h or 85 MPH is indicated as 140 km/h or 85 MPH)
Resolving power of indication	1 km/h or 1 MPH
Cycle of indication	0.5 ± 0.05 second
Accuracy of indication	±2 km/h (3 km/h including swing over 60 km/h)
Hysteresis of indication	1 km/h or 1 MPH or less
Input signal	637.5 rpm of speedometer cable at 60 km/h, 1,035 rpm of speedometer cable at 60 MPH 6 pulses/rev. V_H voltage: 5V, min., V_L voltage: 1V, max., Duty radio: 50±30% at 20 km/h (12 MPH), 50± 10% at 100 km/h (62 MPH)
Speed warning device	Bar lights (Red) under the figures of car speed come on at 88 km/h or 55 MPH or over.
Indicating element	Fluorescent display tubes (2-1/2 digit)

2) Operation

The revolutions of the speedometer cable are transmitted to the speed sensor, and pulse signals corresponding to the car speed are produced by the photo coupler.
The car-speed pulse signals are modified in waveform, are counted by the counter circuit, and memorized in the memory circuit. The memorized data is sent to the display circuit every 0.5 second, and the car speed is indicated with the fluorescent display tubes. (The above processing is performed by a microcomputer.)

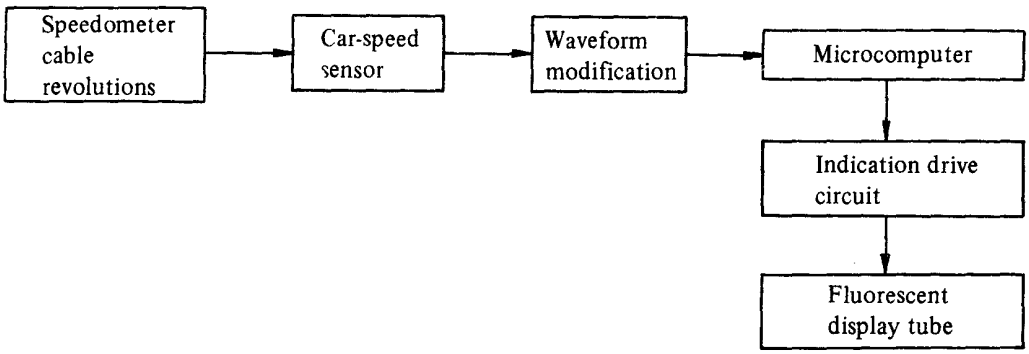

3) Indicant standards

Standard car speed (MPH)	10	29.75	50.5	70.25	85
Tolerable indication error (MPH)	12 ± 2	32 ± 2	53 ± 2	73 ± 2	Indication is only confirmed

(Indicator displays only up to 85 MPH.)

Standard car speed (km/h)	25.5	50	75.5	100	125.5	140
Tolerable indication error (km/h)	29 ± 2	54 ± 2	80 ± 2	105 ± 2	131 ± 2	Indication is only confirmed

(Indicator displays only up to 140 km/h.)

NOTE:
The car-speed sensor circuit and the speedometer cable coupler are united in a body on the back of the speedometer display unit. The car-speed sensor circuit must never be disassembled. Doing so causes an adverse effect on the detection performance.

Downloaded from www.Manualslib.com manuals search engine

• Fuel Gauge

1) Specifications

Resolving power of indication	10 segments, about 6 liters (1.6 US gal, 1.3 Imp gal) per segment
Hysteresis of indication	About 3 liters (0.8 US gal, 0.7 Imp gal)
Indicant mode	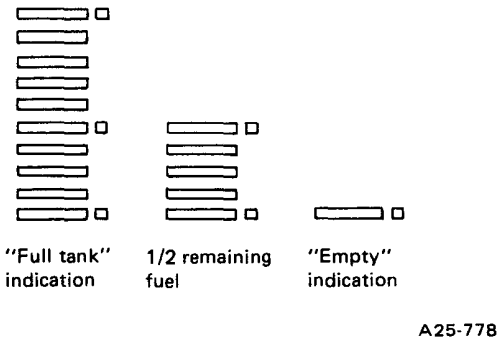 *Fig. 15-151* **NOTE:** **Even if fuel tank is empty, the lowest segment light will not go out.**
Low fuel warning light	When "Empty" [about 6 liters (1.6 US gal, 1.3 Imp gal)] is displayed, orange low fuel indicator light comes on.

2) Operation

A constant current of 27.5 mA flows in the slide resistor of the fuel gauge unit from the constant-current power source. A change in the resistance of the slide resistor, caused by a change in the fuel level, is converted into a voltage variation; it passes through an integrator circuit to eliminate voltage fluctuation due to small waves in the fuel level. After its conversion into a digital signal by *the A/D converter, it is processed by the microcomputer and indicated in a bar graph on the fluorescent display tubes.

When the fuel decreases so much that only the lowest segment lights, the low fuel indicator light under the fuel gauge illuminates. [The remaining quantity of fuel is about 6 liters (1.6 US gal, 1.3 Imp gal) at that time.]

NOTE:
The fuel level is measured by the fuel gauge unit float. If waves suddenly develop in the fuel tank due to motion of the vehicle, the segments that have gone out may illuminate again. This is in no way a sign of any abnormality. Likewise, the low fuel indicator light that has gone out may light up again. The light remains illuminated when the fuel has decreased below 6 liters (1.6 US gal, 1.3 Imp gal).

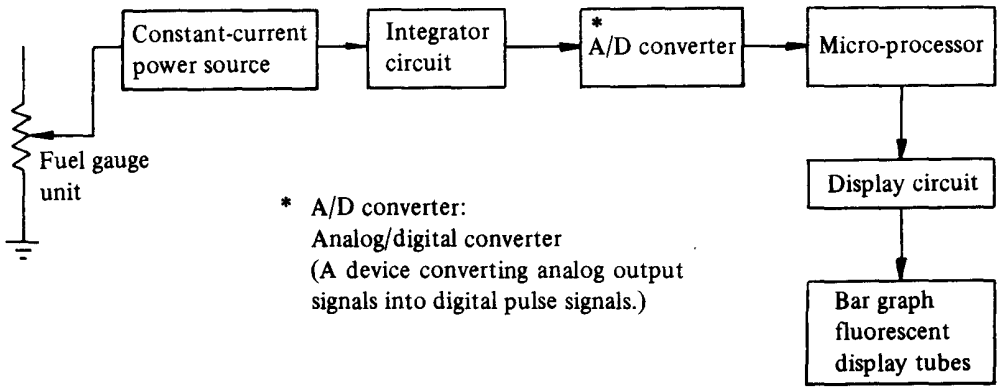

* A/D converter:
Analog/digital converter
(A device converting analog output signals into digital pulse signals.)

3) Indicant standards

Input standard resistance Ω	No. of illuminant segments
10	10
62	5
99 ± 2	2 → 1

As resistance rises (fuel decreases).

Downloaded from www.Manualslib.com manuals search engine

• Temperature Gauge

1) Specifications

Resolving power of indication	10 segments [40 – 130°C (104 – 266°F)] About 10°C (50°F) per segment
Hysteresis of indication	About 3°C (37°F)
Indicant mode	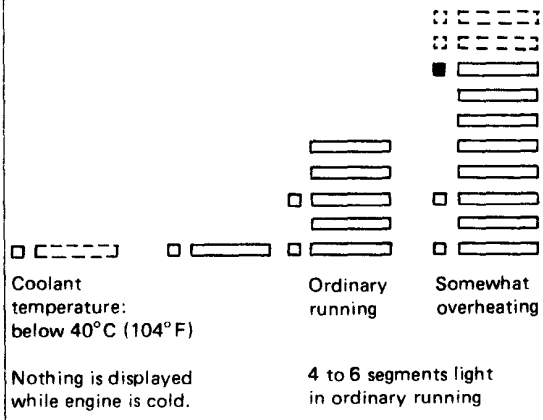 *Fig. 15-152*

2) Operation

A constant current of 78 mA flows in the thermister attached to the intake manifold from the constant-current power source. A change in the thermister's resistance with temperature variation is converted into a voltage change, which is then converted into a digital signal by the A/D converter. The microcomputer processes the digital signal and displays it in a bar graph on the fluorescent display tubes.

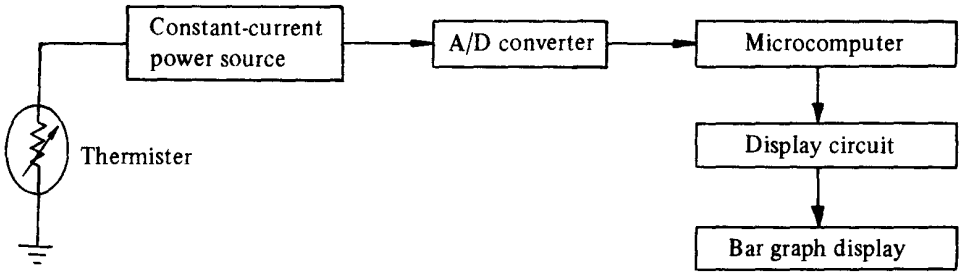

3) Indicant standards

Input standard resistance (Ω)	No. of illuminant segments
7	10
17 ± 2	7 → 8
300	0

As the resistance decreases (the cooling water temperature rises.)

Downloaded from www.Manualslib.com manuals search engine

• Tachometer

1) Specifications

Range of indication	0 – 8,000 rpm.
Resolving power of indication	Below 1,000 rpm.: Pitch of 50 rpm. Over 1,000 rpm.: Pitch of 100 rpm.
Cycle of indication	0.3 – 0.33 second
Accuracy of indication	±100 rpm. ±200 rpm. at over 1,000 rpm. below 4,000 rpm.
Hysteresis of indication	50 rpm. 100 rpm. at over 1,000 rpm.
Input signal	4-cylinder, ignition pulse
Warning function	Buzzer sounds at over 5,500 rpm. (4 Hz ± 5%) In addition, bar lights (Red) under the figures of tachometer turns on.
Display element	4-figure digital indication by fluorescent display tubes

2) Operation

Signals from the minus (-) side of the ignition coil are modified in waveform. The number of pulses entered in a given time is counted by the counter circuit of the microcomputer, and is memorized by the memory circuit.
The memorized data is transferred to the display circuit every 0.3 seconds, displaying the engine rpm. on the fluorescent display tubes.

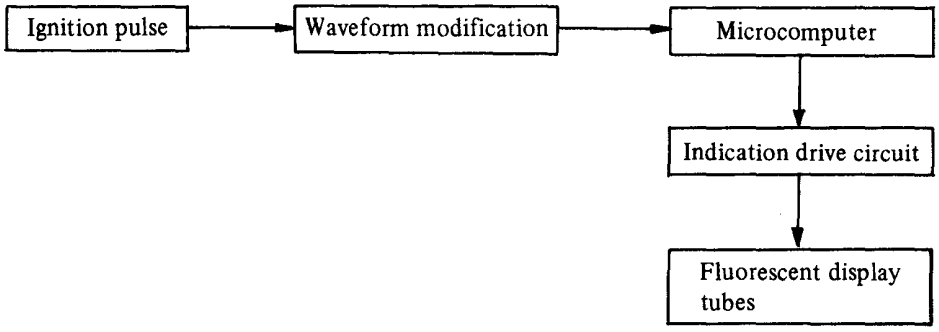

3) Indicant standard

Standard tachometer indication (rpm.)	500	1,000	2,000	3,000	4,000	5,000	6,000
Tolerable error of indication (rpm.)	500 ± 100	1,000 ± 200	2,000 ± 200	3,000 ± 200	4,000 ± 300	5,000 ± 300	6,000 ± 300

Downloaded from www.Manualslib.com manuals search engine

3. Trip Computer

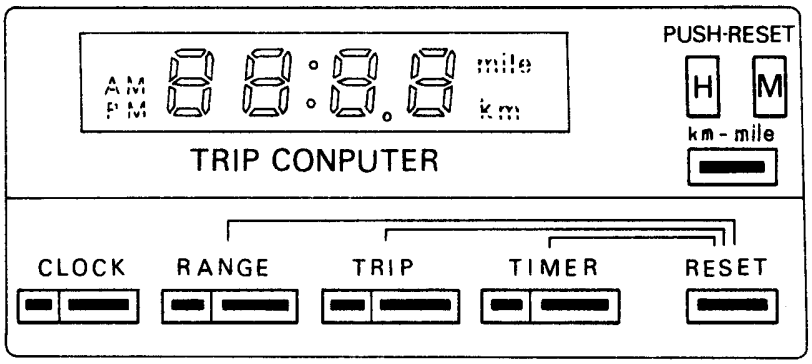

A25-780

Fig. 15-153 Trip computer

• Function of Each Key Switch

CLOCK RANGE TRIP TIMER

When these buttons are pressed, a "buzz" sound is heard, the LED (Light Emitting Diode) on the left side of the button illuminates in green, and the item pressed is displayed.

RESET

If this button is pressed when any of "Range", "Trip", and "Timer" is indicated, a "buzz" tone will sound and the operation of the item being displayed will newly start again.

H

If this button is pressed when "Clock" is displayed, a "buzz" tone will sound, and the hour figures will be fast forwarded.
If the button is released, the hour display of the clock will be set to the value at which the button was released.

M

If this button is pressed when "Clock" is displayed, a "buzz" tone will sound, and the minute figures will be fast forwarded.
If the button is released, the minute indication will be set to the value at which the button was released.
The clock can be reset to 0:00 by pressing the H and M buttons simultaneously when "Clock" is displayed.

NOTE:
The H and M buttons function only when CLOCK is displayed.

Downloaded from www.Manualslib.com manuals search engine

• Indicant Items and Functions

Clock	12-hour meter: AM and PM are indicated (changes over at 12:00) Display of second: Center dot flickers at 0.5-second intervals. Time adjustment: With [H] pressed, hour figures will be fast forwarded. With [M] pressed, minute figures will be fast forwarded. Fast forwarding is at 2 Hz and synchronizes with the flickering of the center dot. The minutes will not be carried to the hour figure. Resetting: Pressing [H] and [M] resets the clock to 0-minutes 0-seconds. If pressed anywhere between 30 and 59 minutes, the minutes will be carried to the hour figure. Accuracy: ±1 second/day at room temperature ±3 seconds/day at -20 – 60°C (-4 – 140°F)
Timer	Indicates the accumulated time after "Reset" button has been pressed. Time, less than an hour is displayed in minutes and seconds, and thereafter in hours and minutes, with the center dot illuminating. In overflow: Time counter is reset from 99 hours 59 minutes to 0 minutes 0 seconds and restarts. Accuracy: Same as for "Clock", but includes a maximum error of 1 second at pushing of "Reset" button.
Trip	Indicates the accumulated running distance after "Reset" button has been pressed. Display is in km or mile with resolving power of 0.1 km or 0.1 mile, with an illuminant decimal point. In overflow: Counter is reset from 999.9 km (mile) to 0.0 km (mile) or 1,599 km to 0.0 km (U.S.A. only) and restarted. Accuracy: 0.1 km = 382 pulses, or 0.5 mile = 3,056 pulses Pulses from speed sensor are used for pulse signals.
Range	Distance over which the car can travel before the low fuel indicator light goes on are displayed in unit of 10 km or 10 mile. Estimate is made by calculating: [(Remaining fuel) - 6ℓ] × (mean fuel consumption) $\text{(Mean fuel consumption)} = \frac{\text{Running distance after pressing "Reset" button}}{\text{Fuel consumption after pressing "Reset" button}}$ When "Reset" is pressed, calculation starts with running distance and fuel consumption as 0, and "— — — —" is displayed before 100 seconds have passed. Then display is renewed each time fuel is consumed by 0.5 liter, or running distance reaches 8 km. When total running distance reaches 999.9 km after pressing "Reset", or when fuel consumption amounts to 999.5ℓ after pressing "Reset", display changes to "— — — —" within 100 seconds and calculations restart automatically. Pulses from the speed sensor are used to operate accumulative running distance, the same as in "Trip". Voltage signals from the fuel meter unit are used to operate accumulative fuel consumption, the same as in the fuel meter.
Test program	The trip computer contains the following test programs to check for any malfunction of the circuitry or display after *the power source has been connected. ① Display tube test program — For 200 seconds all the fluorescent display tubes of the trip computer light like "AM, PM, 888.8, mile (U.S.A. models only) and km". ② Shift test program — Pressing the "Reset" button during these 200 seconds switches the display tube test program to the shift test program where numbers of four figures change. However, if any of the "Clock", "Timer", "Trip", and "Range" button is pressed during the processing of this test program, the contents corresponding to the button pressed will be displayed.

Downloaded from www.Manualslib.com manuals search engine

Test program (continued)	Further, if each display button is not pressed after the 200 seconds test program, the trip computer will continue to display the remaining fuel quantity. The accuracy in the display of the remaining fuel quantity is as follows at room temperature.

Fuel quantity	Resistance of fuel gauge unit	Indication on trip computer (ℓ)
Full tank	5Ω	60 – 64
About 1/2	60Ω	27 – 31
Empty	105Ω	0 – 4

The arithmetic circuitry and display tubes are in good condition if the above tests are properly performed.

*: When the single-pole power terminal (green wire) under the instrument panel is connected and when a battery terminal is connected.

Downloaded from www.Manualslib.com manuals search engine

4. Terminals of Connectors

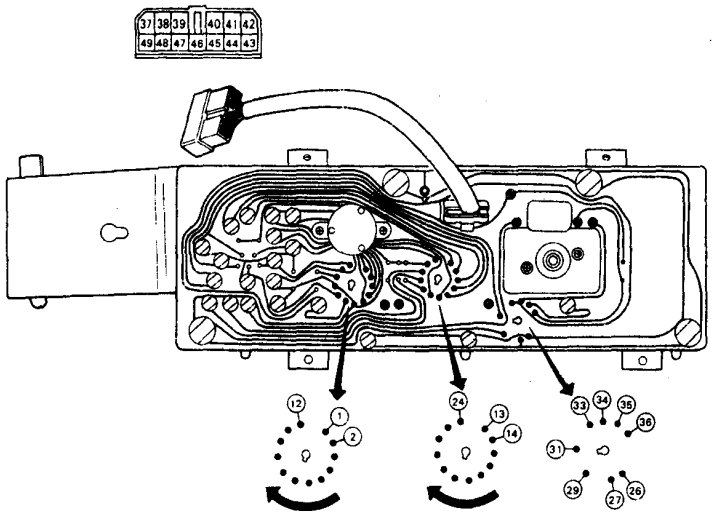

A25-827

Fig. 15-154

Switch, sensor etc.	Terminal No.	Light, gauge, meter, etc. in combination meter
——	1	——
——	2	——
4WD LO switch	3	4WD LO indicator light
4WD switch	4	4WD indicator light
Door switch (Front, LH)	5	Door ajar warning light
Ignition-starter switch and fuse No. 12	6	(Warning & indicator lights)
Turn signal switch	7	Turn signal indicator light (RH)
Brake fluid level sensor	8	Brake fluid level warning light
Ignition-starter switch and fuse No. 12	9	(Warning & indicator lights)
Rear gate switch	10	Rear gate ajar warning light
Parking brake switch	11	Parking brake warning light
Door switch (Rear, LH)	12	Door ajar warning light (Rear, LH)
Seat belt switch	13	Fasten seat belt warning light
Ignition-starter switch and fuse No. 12	14	
Door switch (Front, RH)	15	Door ajar warning light (Front, RH)
Door switch (Rear, RH)	16	Door ajar warning light (Rear, RH)
Rear defogger switch	17	Rear defogger indicator light
Dimmer switch	18	Headlight beam indicator light
Battery (Fuse No. 9)	19	
Brake fluid level sensor	20	Check diode of brake fluid level warning light
Oil pressure switch	21	Oil pressure indicator light
Stop light checker	22	Stop light warning light
Voltage regulator	23	Charge indicator light

Downloaded from www.Manualslib.com manuals search engine

Switch, sensor etc.	Terminal No.	Light, gauge, meter, etc. in combination meter
Room light	24	Check diode
——	25	——
Illumination intensity control switch	26	(Illumination lights)
Lighting switch	27	
——	28	——
4WD switch	29	Four wheel illumination lights
——	30	——
(Grounding)	31	Rear defogger indicator light
——	32	——
(Grounding)	33	Turn signal indicator lights
(Grounding)	34	
Turn signal switch	35	Turn signal indicator light (LH)
Cruise control unit	36	Car speed sensor
ECM	37	ECS indicator light
4WD-AT fluid temperature switch	38	4WD-AT fluid temperature warning light
Lighting switch	39	Light signal (Computer units)
Fuel gauge unit	40	Fuel signal (Computer units)
——	41	Test program (Digital computer unit)
(Car speed sensor)	42	Car speed signal (Computer units)
Thermosensor	43	Temperature signal (Digital computer unit)
(Grounding)	44	Grounding (Computer units)
——	45	Test program (Digital computer unit)
Ignition coil (⊖ terminal)	46	Ignition signal (Computer units)
(Grounding)	47	A/D converter grounding
——	48	——
Ignition-starter switch and fuse No. 12	49	Power source (Trip computer)

Downloaded from www.Manualslib.com manuals search engine

15-8. Switches

1. Ignition-Starter Switch

Ignition switch, starter switch and key warning switch are combined into one. Ignition-starter switch is installed on steering column and steering lock mechanism is provided.
Ignition-starter key is pulled out of ignition-starter switch only at "LOCK" position.

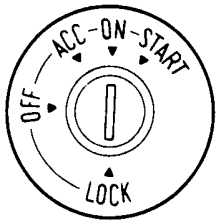

OM-038

Fig. 15-155 Ignition-starter switch

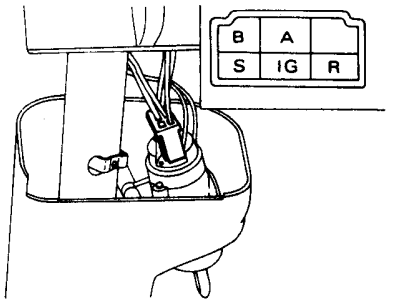

A25-273

Fig. 15-156 Terminal of ignition-starter switch

Connection of ignition-starter switch terminals is as shown in the following table 15-1.

NOTE:
Make sure to securely connect electric connector to ignition-starter switch.

(Table 15-1) Connection of ignition-starter switch terminals

Position \ Terminal	B	IG	S	A	R
LOCK					
OFF					
ACC	○			○	
ON	○	○		○	
START	○	○	○		○

2. Lighting and Illumination Intensity Control Switch

This switch is combined with headlight switch and illumination intensity control switch.

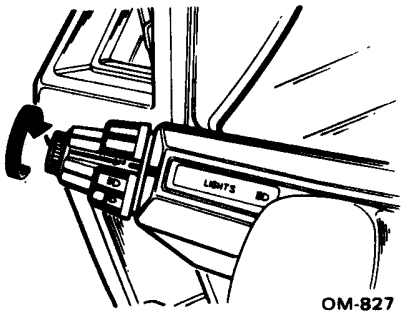

OM-827

Fig. 15-157 Lighting and illumination intensity control switch

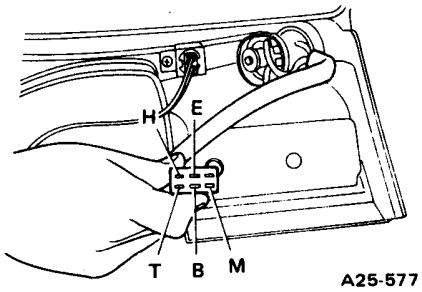

A25-577

Fig. 15-158 Connector of lighting and illumination intensity control switch

The circuit for the lighting and illumination intensity control switch is closed only when ignition-starter switch is in "ON" position.
Connection of lighting & illumination intensity control switch terminals is as shown in the following table 15-2.

• Operation of Lighting Switch

Lighting switch has three steps OFF, ON (1st step), ON (2nd step).
1) When lighting switch is putted in the 1st step;
Front combination, both front & rear side marker, tail, licence plate and illumination lights are turned on.
2) When lighting switch is putted in the 2nd step;
Headlights, front combination, both front & rear side marker, tail, licence plate and illumination lights are turned on.
Headlights are changed over high beam and low beam by operating dimmer switch.

• Operation of Illumination Intensity Control Switch

Illumination intensity of lights for instruments, digital clock, radio and heater & ventilation control panel can be adjusted by turning switch knob at both switching positions (1st and 2nd steps).

Downloaded from www.Manualslib.com manuals search engine

(Table 15-2) Connection of lighting & illumination intensity control switch

Switch position \ Terminal	B	T	H	E	M
OFF	○				
1st step	○——	——○		○——	——○
2nd step	○——	——○	○——	——○	——○

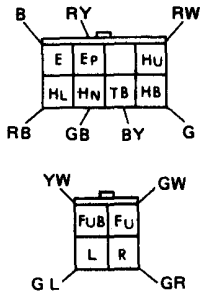

A25-783

Fig. 15-162

• Replacement

1) Remove screws installing steering column, and pull down steering column.
2) Remove screws securing combination meter visor, and take out it.
3) Disconnect electric wires from the switch at connector.

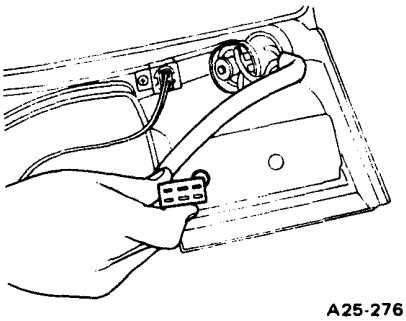

A25-276

Fig. 15-159 Disconnecting electric wires

4) Pull out knob, remove nut and replace switch.

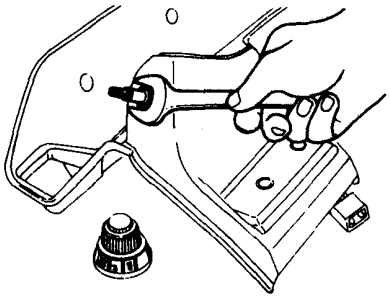

A25-277

Fig. 15-160 Taking out the switch

3. Combination Switch

Combination switch is fitted in steering column and is provided with dimmer switch, turn signal switch and hazard warning light switch.

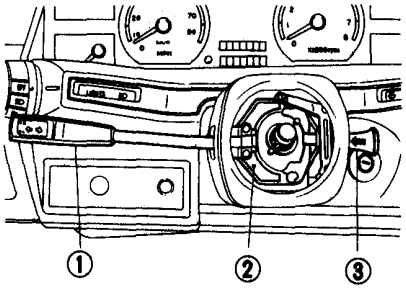

1 Dimmer and turn signal light switch lever
2 Combination switch
3 Hazard switch knob

A25-782

Fig. 15-161 Combination switch

• Operation of Dimmer Switch

While lighting switch is turned to 2nd step, headlight low beams are activated by pulling dimmer switch lever toward you, and headlight high beams by pushing dimmer switch lever forward you, at the same time, headlight beam indicator light in combination meter is turned on.
When the lever is at low beam position and even when lighting switch is OFF, headlight will be lighted in high beam while pulling the lever moreover toward you.

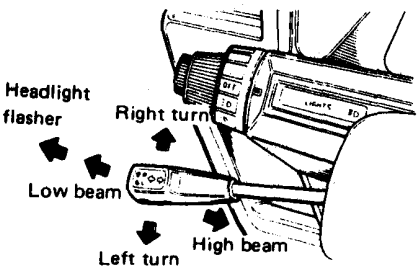

OM-733

Fig. 15-163 Operation of dimmer switch

Switch position \ Terminal		EP	E	HU	HL	TB	HB	FUB	FU	L	R
Dimmer switch	Low beam		○——	——○							
	High beam		○——	——○							
	Headlight flasher	○——	——○								
Turn signal switch	Left turn					○——	——○		○——	——○	
	Neutral					○——	——○				
	Right turn					○——	——○		○——	——○	
Hazard warning light switch	OFF										
	ON						○——	——○	○——	——○	——○

Downloaded from www.Manualslib.com manuals search engine

• Operation of Turn Signal Switch

When the switch is actuated with ignition-starter switch "ON", both front and rear turn signal lights and turn signal indicator lights on combination meter are flashed.

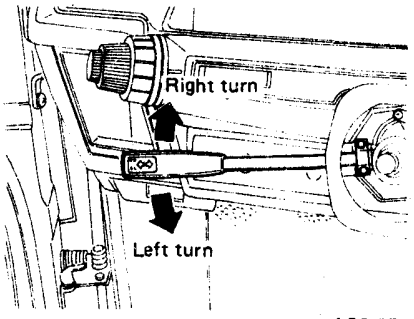

Fig. 15-164 Operation of turn signal switch

• Operation of Hazard Warning Light Switch

While the switch is actuated regardless of position of ignition-starter switch by pushing the switch knob, all turn signal lights and turn signal indicator lights are flashed.

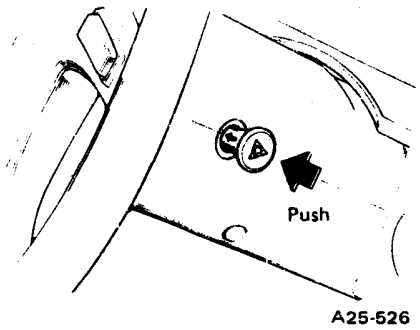

Fig. 15-165 Hazard warning light switch

• Turn Signal and Hazard Unit

The unit is a transister type, and is installed with a screw under the instrument panel.

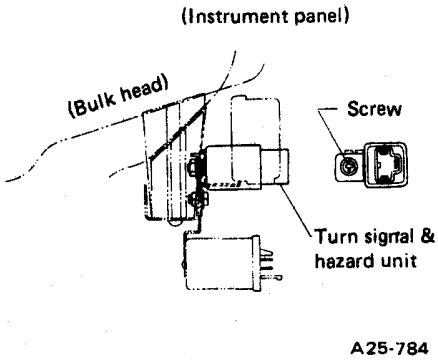

Fig. 15-166

NOTE:
When handling the unit, be careful not to jar it.

• Replacement

1) Remove screws installing steering column, and pull down steering column.
2) Remove screws from backside of steering wheel and disconnect electric wires from horn switch at connector, and then take out steering wheel cover.
3) Remove nut installing steering wheel, and take out steering wheel.

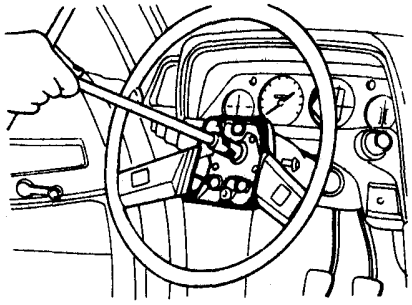

Fig. 15-167 Taking out steering wheel

4) Remove screws installing combination switch and steering column, and take out steering column cover.

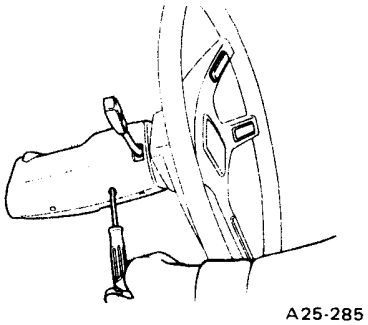

Fig. 15-168 Removing screws

5) Disconnect electric wires from the switch at connector.

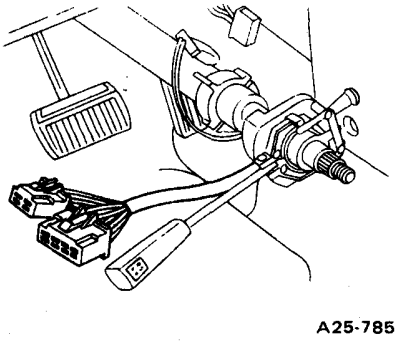

Fig. 15-169 Disconnecting connector

6) Pull out combination switch, and replace it.

NOTE:
Be sure to connect electric wire with horn switch at connector before installing steering wheel cover.

Downloaded from www.Manualslib.com manuals search engine

15-9. Lights

1. Headlight

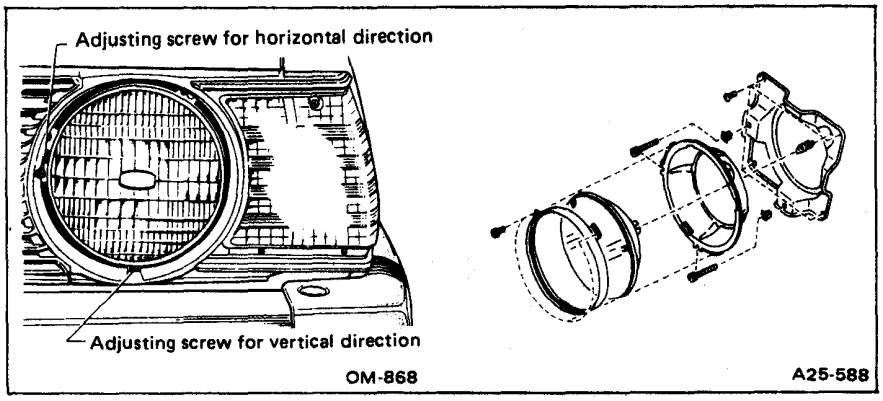

Fig. 15-170

NOTE:
Before replacing sealed beam, remove screws and take out front grille.

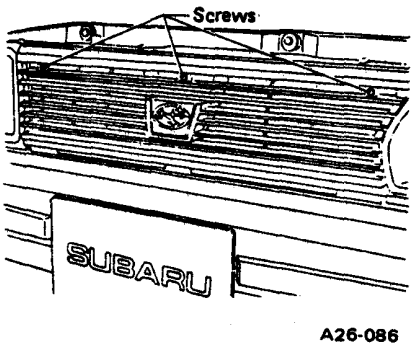

Fig. 15-173

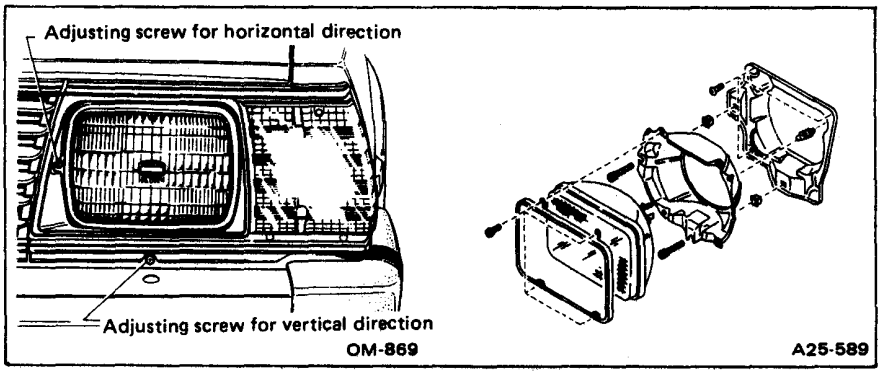

Fig. 15-171

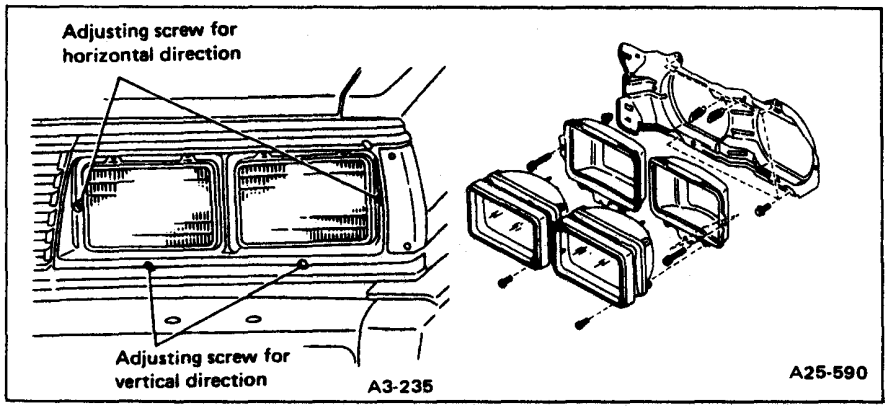

Fig. 15-172

Downloaded from www.Manualslib.com manuals search engine

2. Front Combination Light

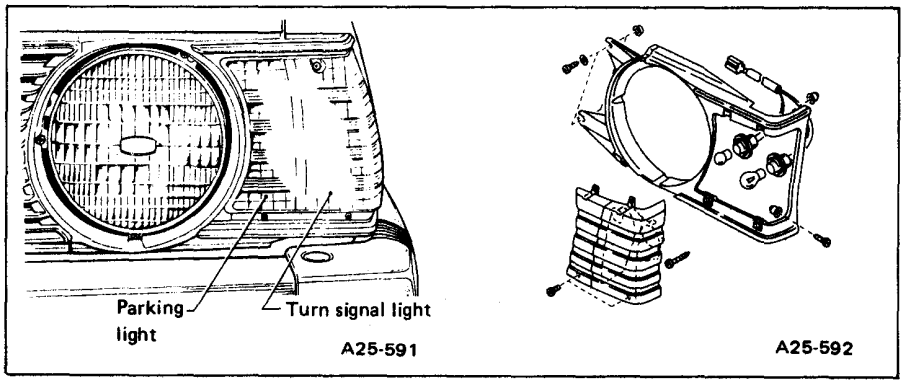

Fig. 15-174

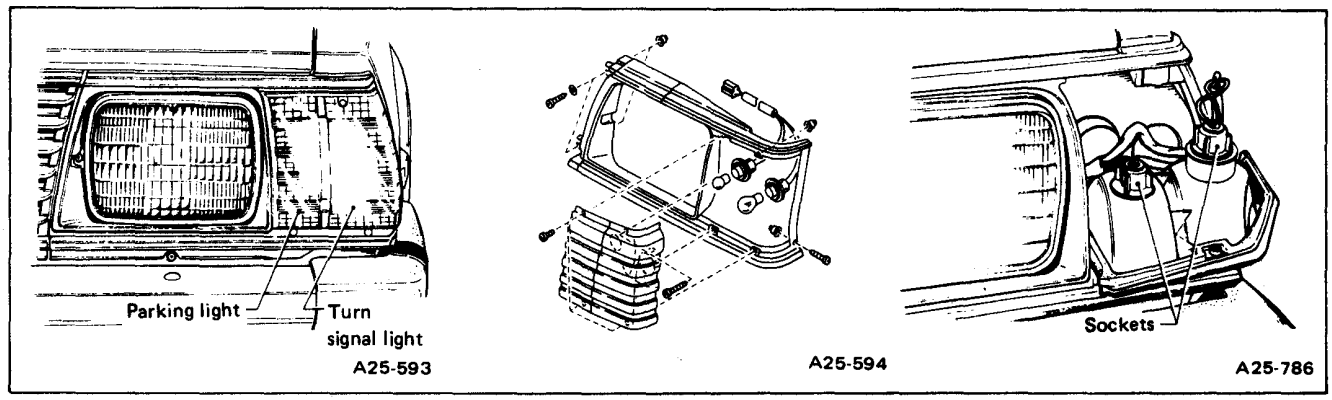

Fig. 15-175

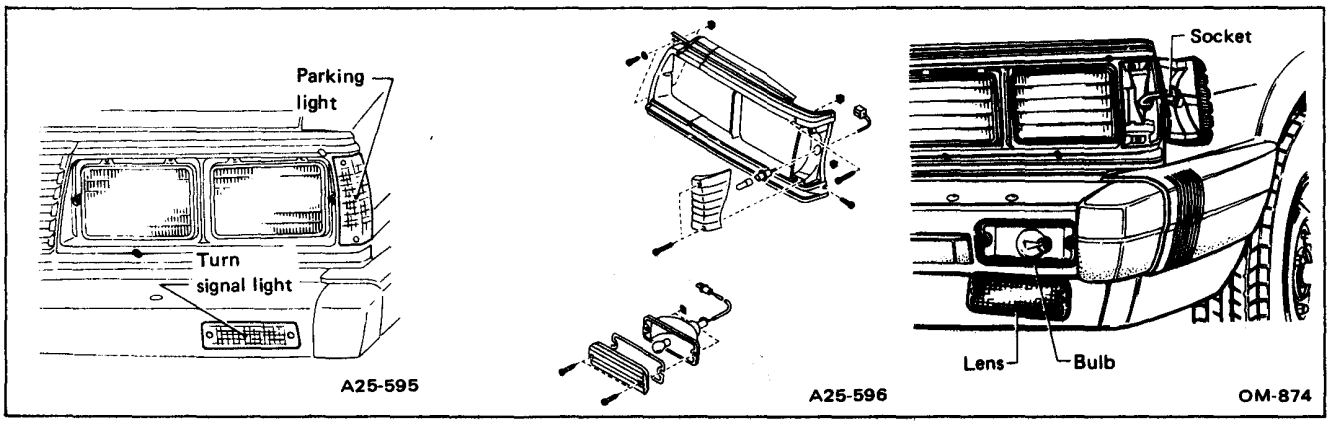

Fig. 15-176

Downloaded from www.Manualslib.com manuals search engine

3. Rear Combination Light

(Hatchback)

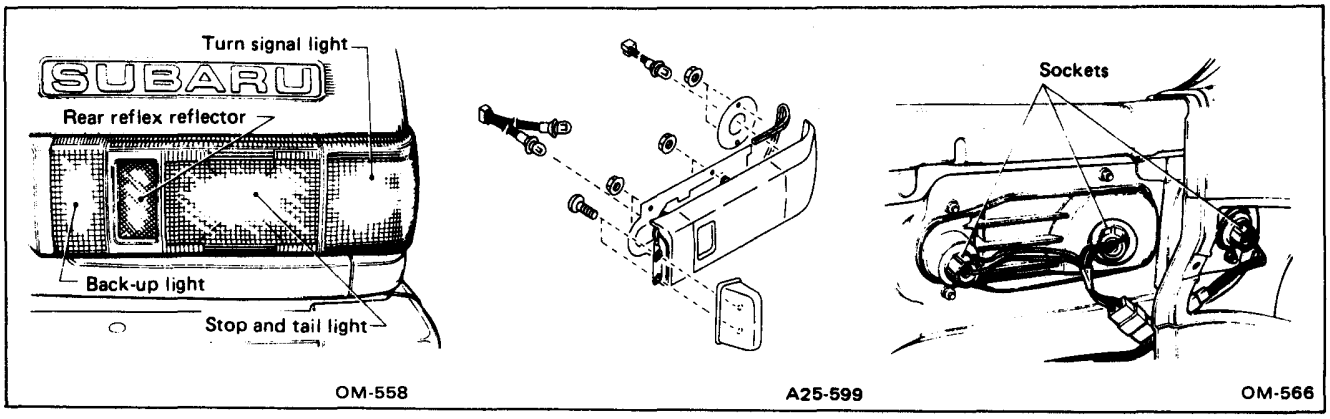

Fig. 15-177

(Sedan & Hardtop)

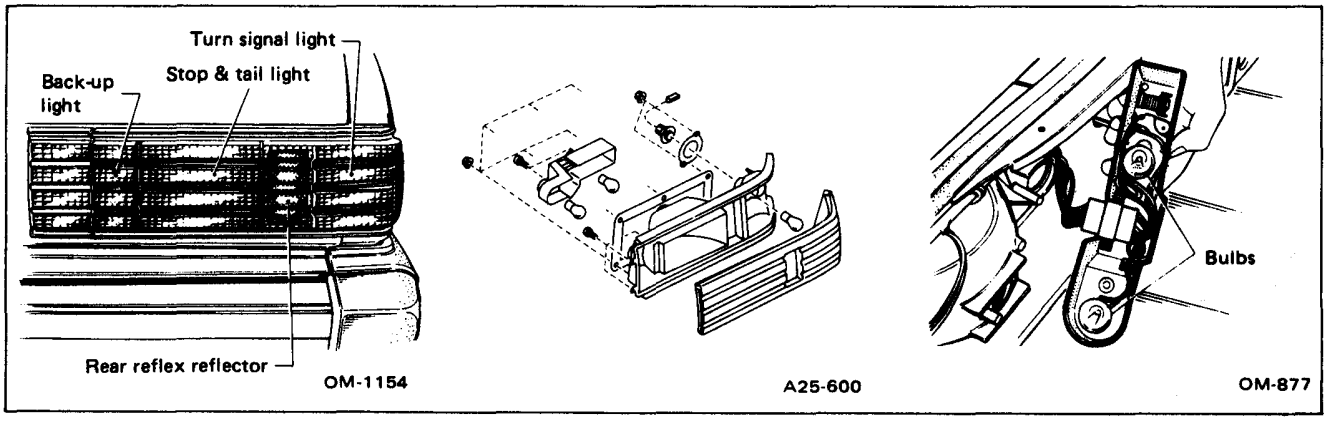

Fig. 15-178

(Station Wagon)

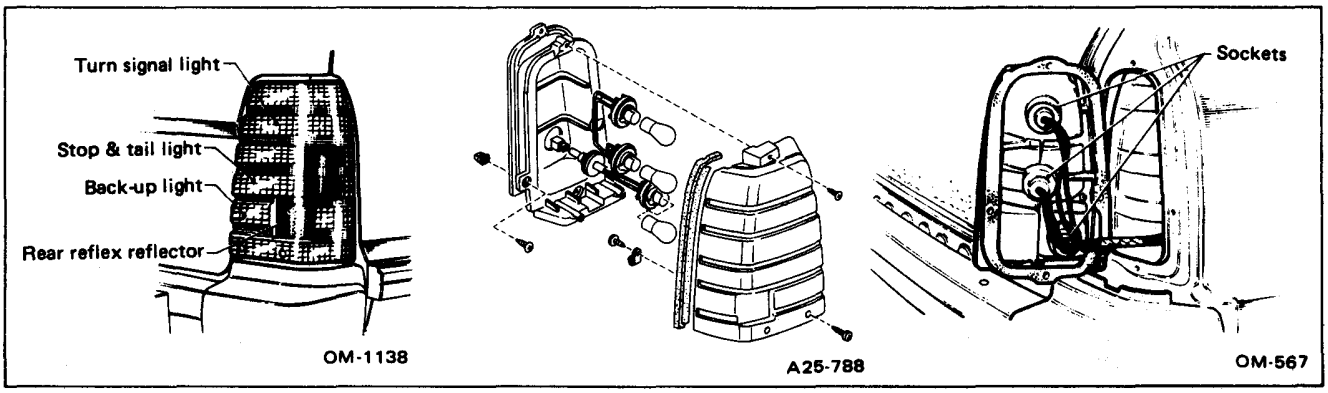

Fig. 15-179

Downloaded from www.Manualslib.com manuals search engine

(BRAT)

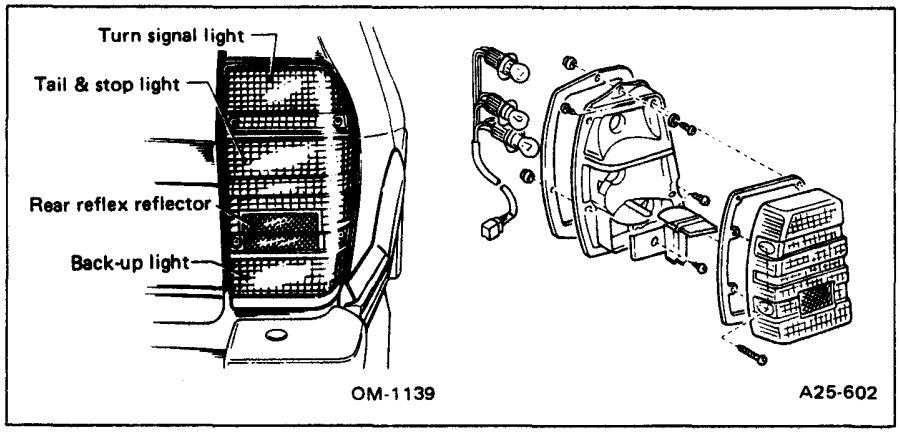

Fig. 15-180

4. License Plate Light

(Hatchback)

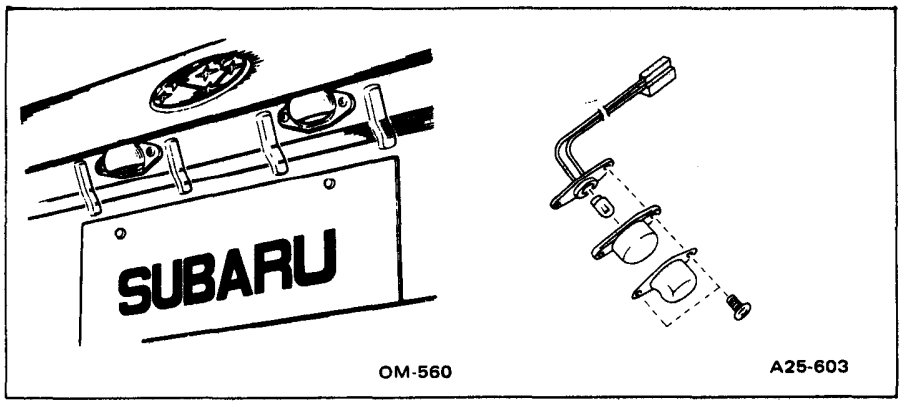

Fig. 15-181

(Sedan & Hardtop)

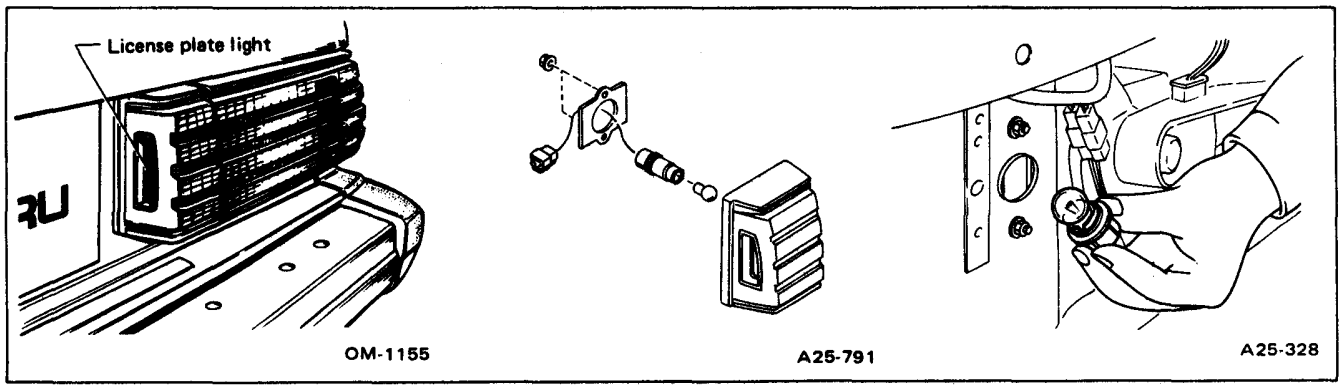

Fig. 15-182

Downloaded from www.Manualslib.com manuals search engine

(Station Wagon)

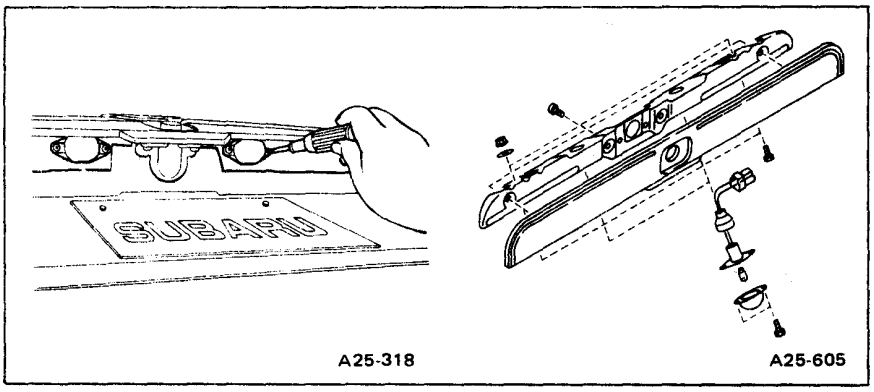

Fig. 15-183

(BRAT)

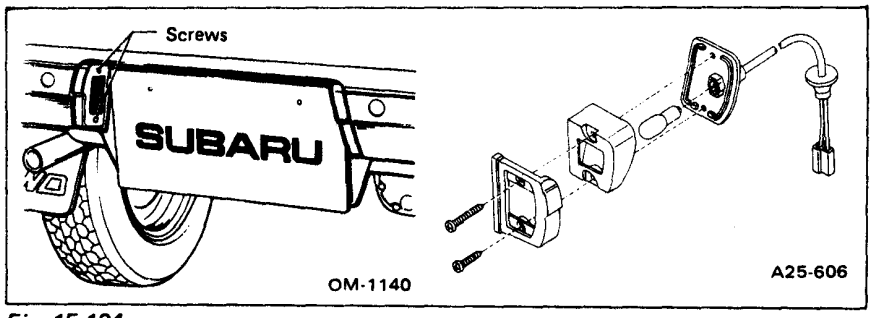

Fig. 15-184

5. Side Marker Light

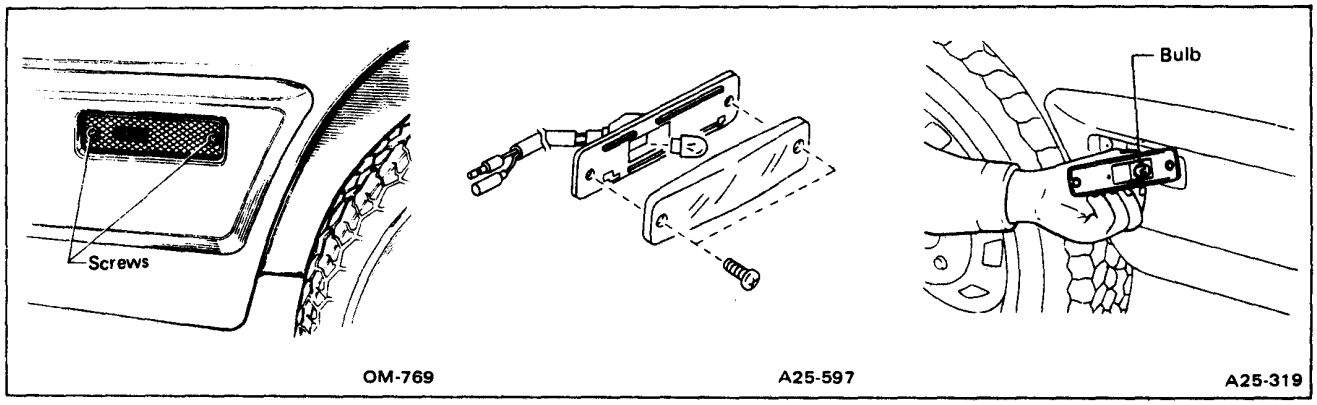

Fig. 15-185 Front marker light

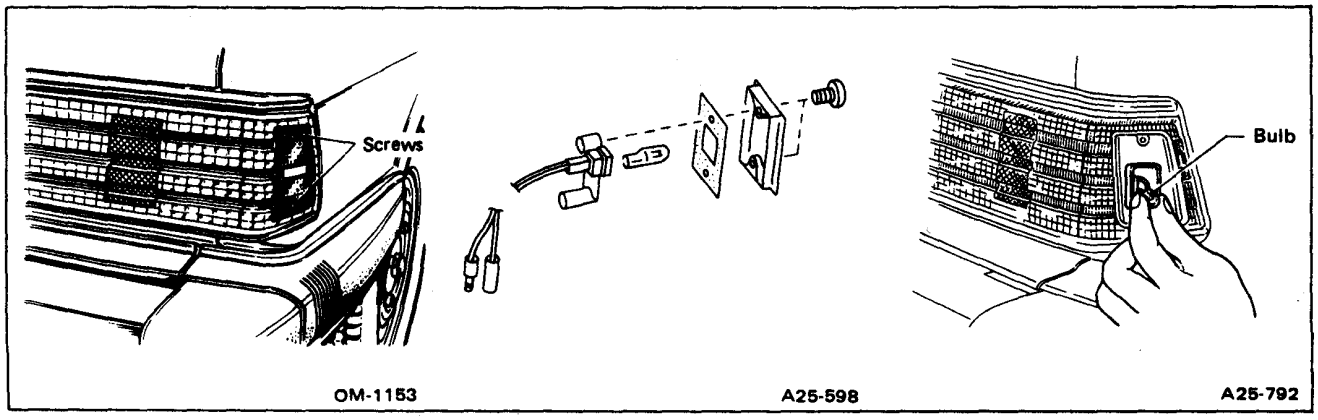

Fig. 15-186 Rear marker light

Downloaded from www.Manualslib.com manuals search engine

6. Room Light

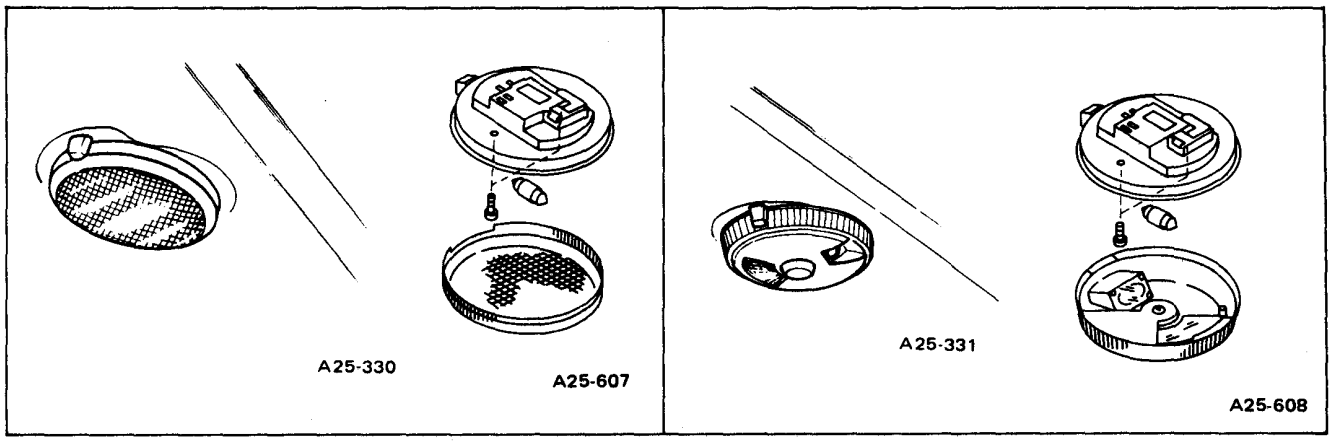

Fig. 15-187 *Fig. 15-188*

7. Glove Box Light

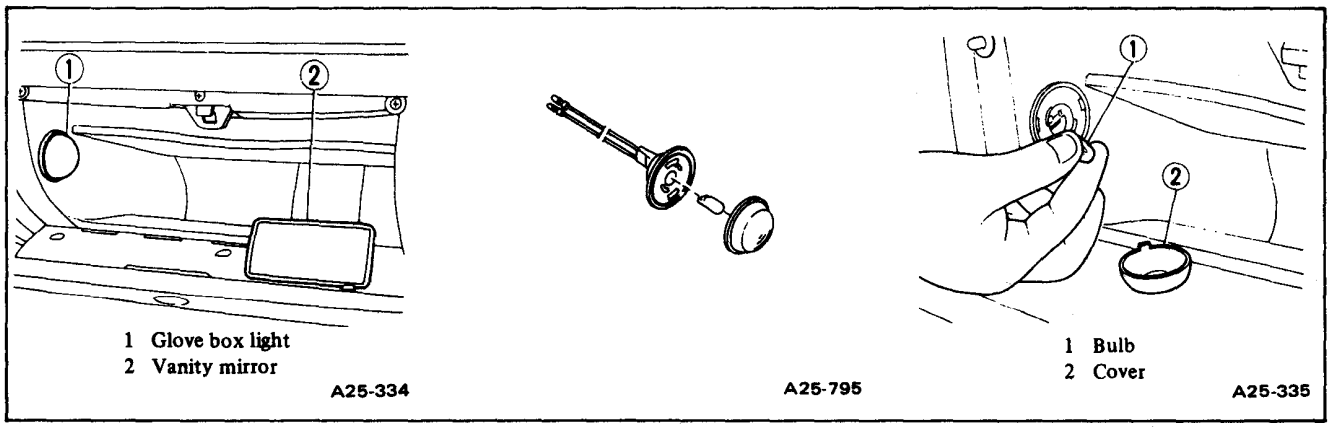

Fig. 15-190

8. Trunk Room Light

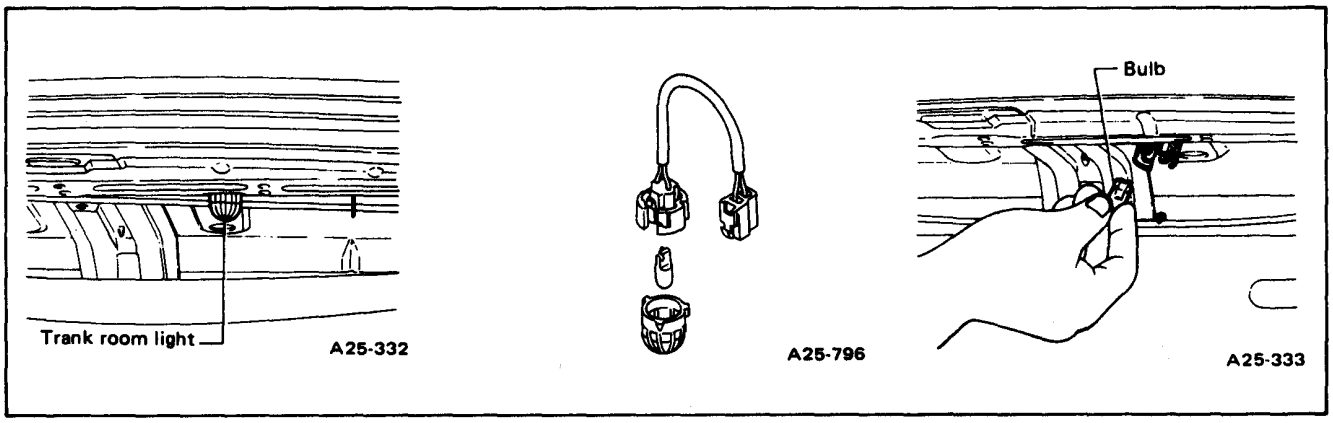

Fig. 15-191

Downloaded from www.Manualslib.com manuals search engine

15-10. Wiper and Washer

- FRONT

1. Outline

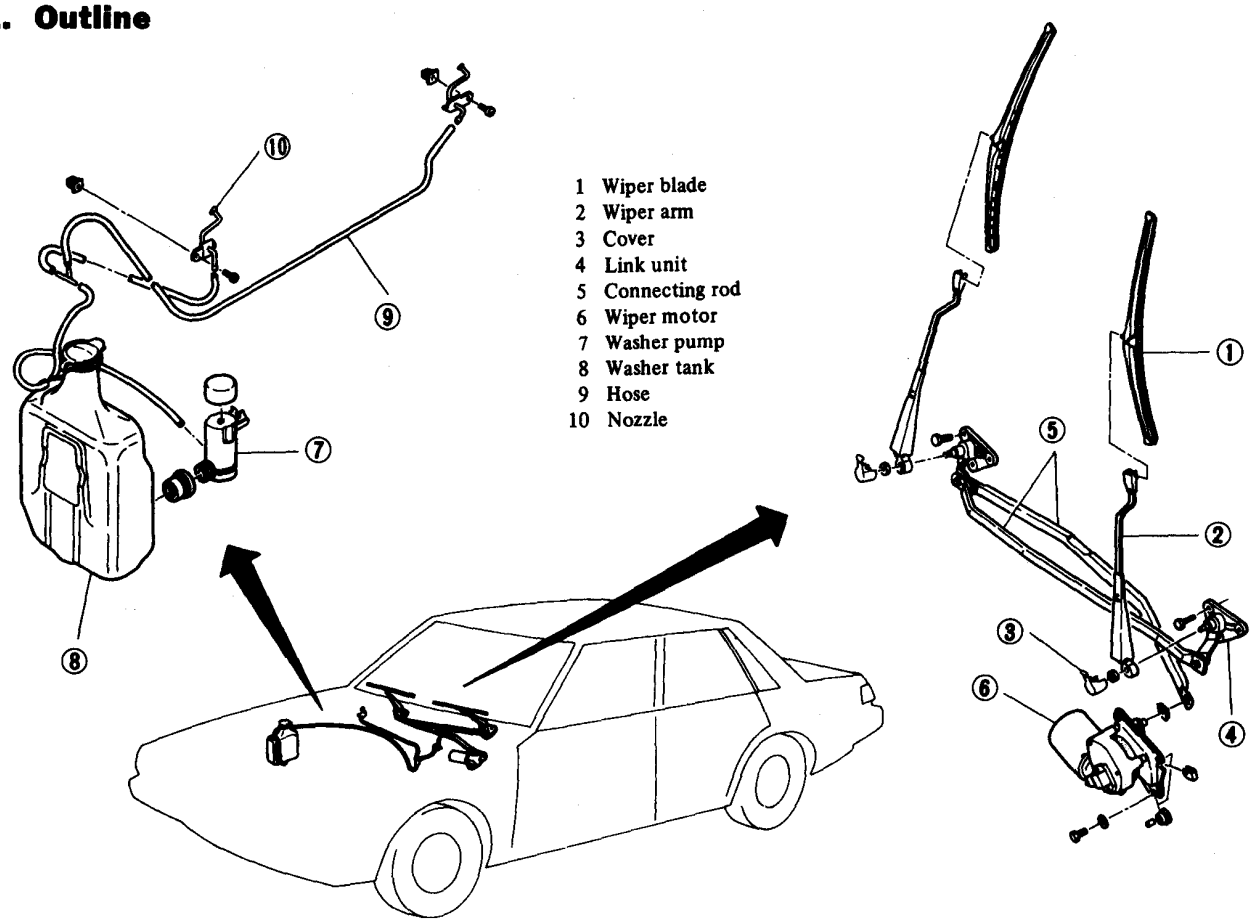

Fig. 15-192 Windshield wiper and washer

Downloaded from www.Manualslib.com manuals search engine

• Windshield Wiper and Washer Switch

The windshield wiper switch and washer switch are combined into one.

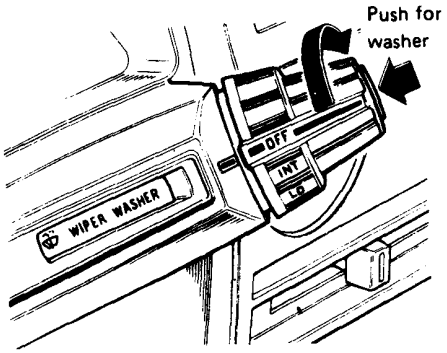

Fig. 15-193

Windshield wiper switch

When the ignition-starter switch is set to "ON" or "ACC" position the wiper motor can be operated by turning the switch knob, as shown in the illustration.

The wiper switch has two steps.

First step: low speed

Second step: high speed

Adjust the wiper speed according to the rain condition.

The wipers are self-parking type. They will automatically return to their original position and stop when the switch is turned to the "OFF" position with the ignition-starter switch in the "ON" or "ACC" position.

Washer switch

When the ignition-starter switch is in the "ON" or "ACC" position, the washer fluid will be ejected onto the windshield glass by pushing the top of the switch knob.

Intermittent wiper switch

The switch which is indicated "INT" is located between "OFF" and "LO" position of windshield wiper switch as shown in the illustration.

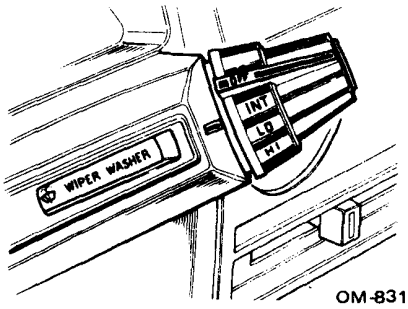

Fig. 15-194

When setting the switch to "INT" position, the wiper motor can be operated intermittently.

On the other hand, the wipers can be automatically operated approximately four strokes after pushing the washer switch, when the ignition-starter switch is in the "ON" position.

• Electric Circuit

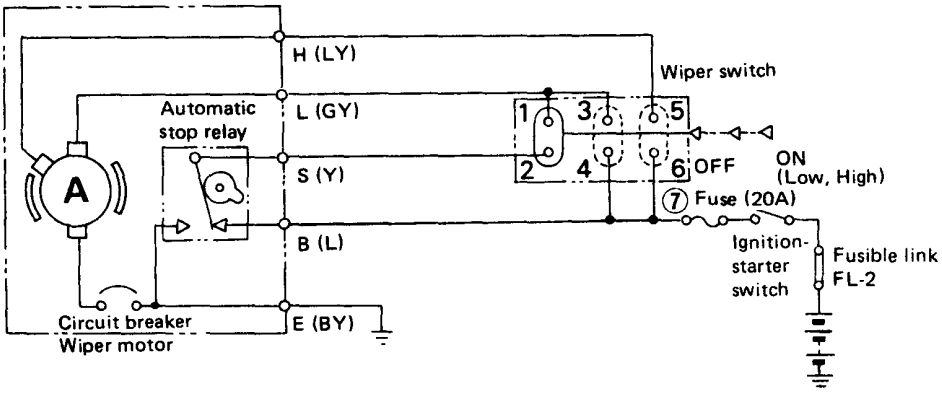

Fig. 15-195

Downloaded from www.Manualslib.com manuals search engine

2. On-car Services

• Adjustment

1) Make sure that wiper operation is in smooth.
2) When wiper switch is in "OFF" position, adjust blades in original position as shown in illustration by changing wiper arm installation.

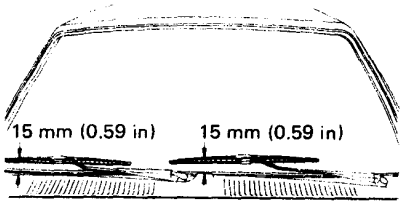

Fig. 15-196 Adjusting wiper blade position

3) Adjust washer ejecting point on windshield glass as shown in illustration when car stops.

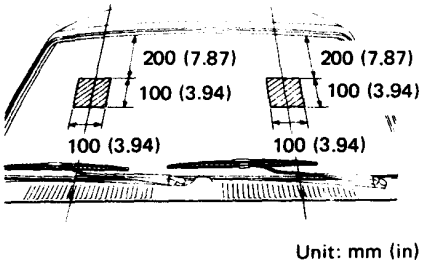

Fig. 15-197 Adjusting washer ejecting point

• Replacement of Wiper Blade Rubber

1) While pushing both side claws of latch toward Ⓐ as shown in the following illustration, pull out latch along with rubber and vertebra toward Ⓑ.

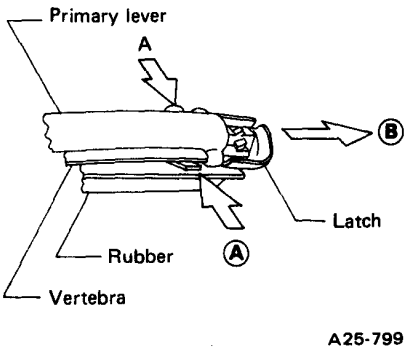

Fig. 15-198

2) Install new rubber ASSY (rubber and vertebra) in the reverse order of removal.

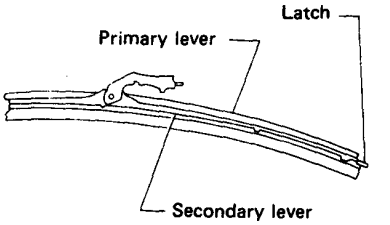

Fig. 15-199

NOTE:
a. Make sure the vertebra is securely held at the lock portions of the primary lever and secondary lever.
b. Install rubber ASSY properly so that latch is located as before.

3. Replacement

1) Removal

1) Disconnect both blades from arms by pulling lever up and sliding them.

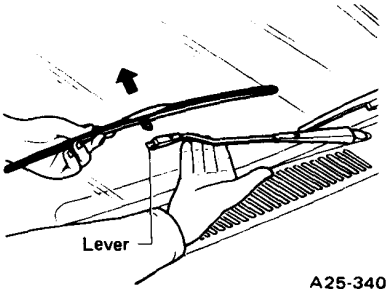

Fig. 15-200 Disconnecting blade

2) Pulling up covers of arms, and take them out.
3) Remove nuts installing arms, and take out them.

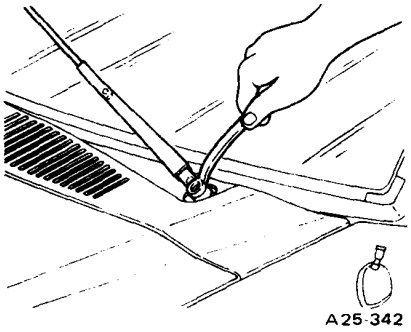

Fig. 15-201 Removing nut

4) Open engine hood, disconnect ground cable from negative terminal of battery, and disconnect electric wires from wiper motor at connector.
5) Remove screws installing cowl panel and take out it.
6) Take out links and connection rod.

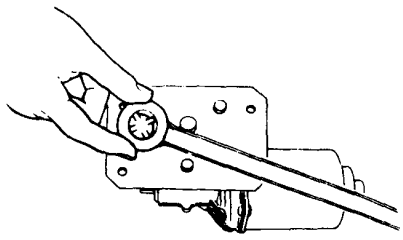

Fig. 15-202 Taking out links and connection rod

NOTE:
Prepare a gadget that has same size of inner diameter as outer diameter of plastic joint, apply it on plastic joint, and disconnect rod from wiper motor by pushing it down to tighten plastic claws.

7) Remove bolts installing wiper motor and take out it.

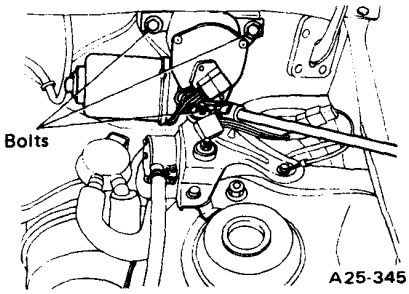

Fig. 15-203 Removing bolts

Downloaded from www.Manualslib.com manuals search engine

8) Disconnect hoses between washer nozzles and tank at their connection.
9) Remove bolts installing nozzles, and take out them.

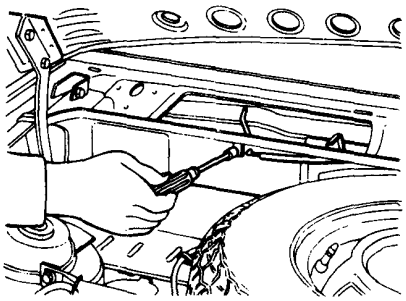

Fig. 15-204 Removing bolts

10) Disconnect electric wires from washer pump at connector, and take out tank by pulling up.

2) Installation

For reinstallation, follow the removal procedure in reverse order with some cautions as follows.
1) After connecting electric wires with washer pump, install hose to it.

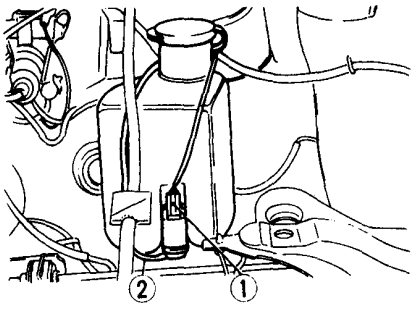

Fig. 15-205 Installing hose

2) Install washer nozzle after fitting projection to hole to pravent it from rotating.

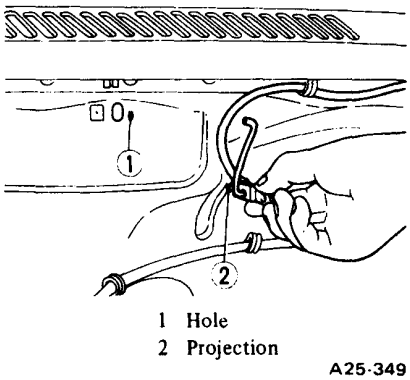

Fig. 15-206 Installing washer nozzle

3) Use bolts of 16 mm (0.63 in) length to prevent them from stricking connecting rod when installing wiper motor.
4) Install wiper arms with specified tightening torque.

Tightening torque	4.4 – 7.4 N·m (0.45 – 0.75 kg·m, 3.3 – 5.4 ft-lb)

5) Install wiper arms after turning ignition-starter switch to "ON" for a while to set them in the normal position.
6) On driver's side, use the arm with red marking that distiguishes from one for the other side.

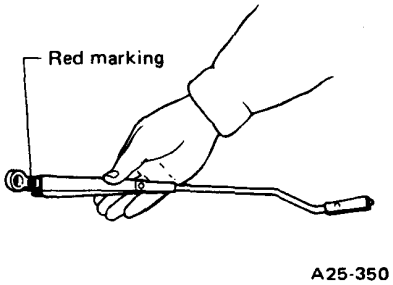

Fig. 15-207 Red marking

Downloaded from www.Manualslib.com manuals search engine

- REAR

1. Outline

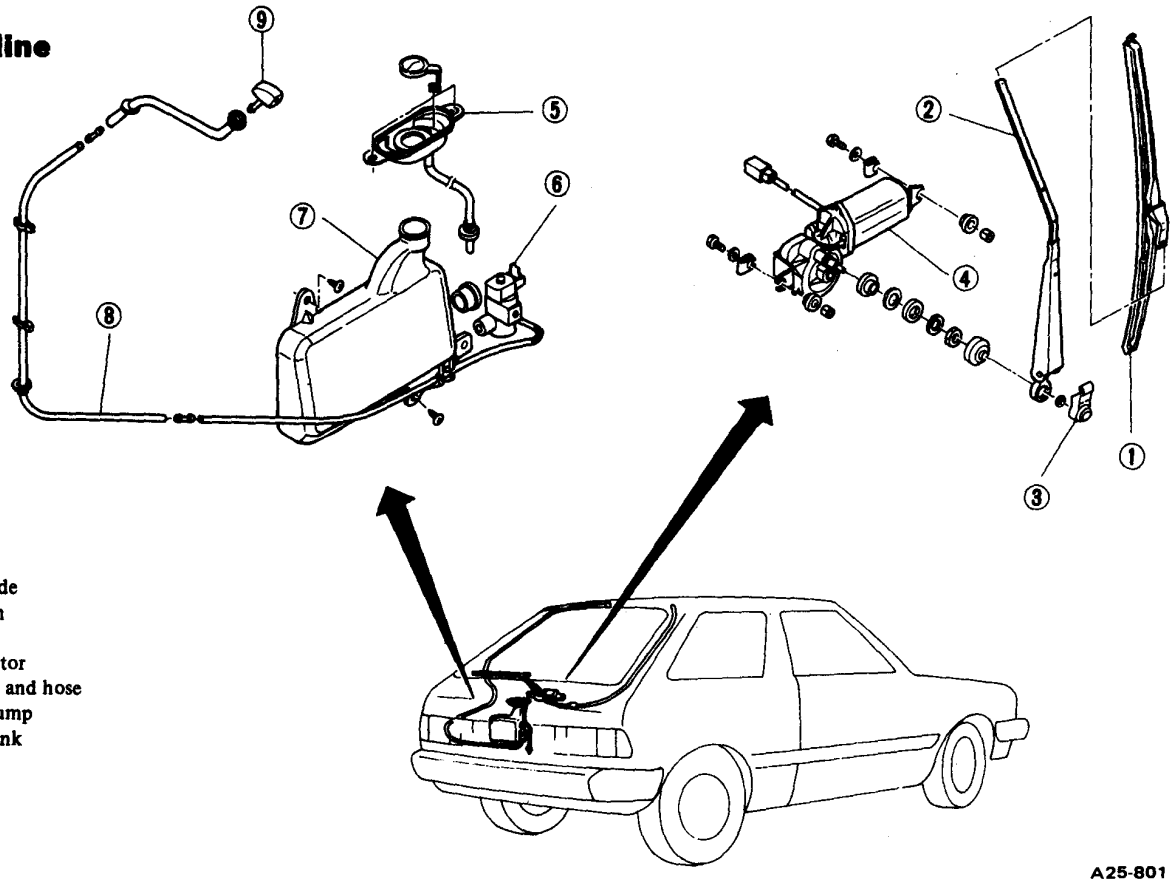

1 Wiper blade
2 Wiper arm
3 Cover
4 Wiper motor
5 Drain cap and hose
6 Washer pump
7 Washer tank
8 Hose
9 Nozzle

A25-801

Fig. 15-208 Rear window wiper and washer (Hatchback)

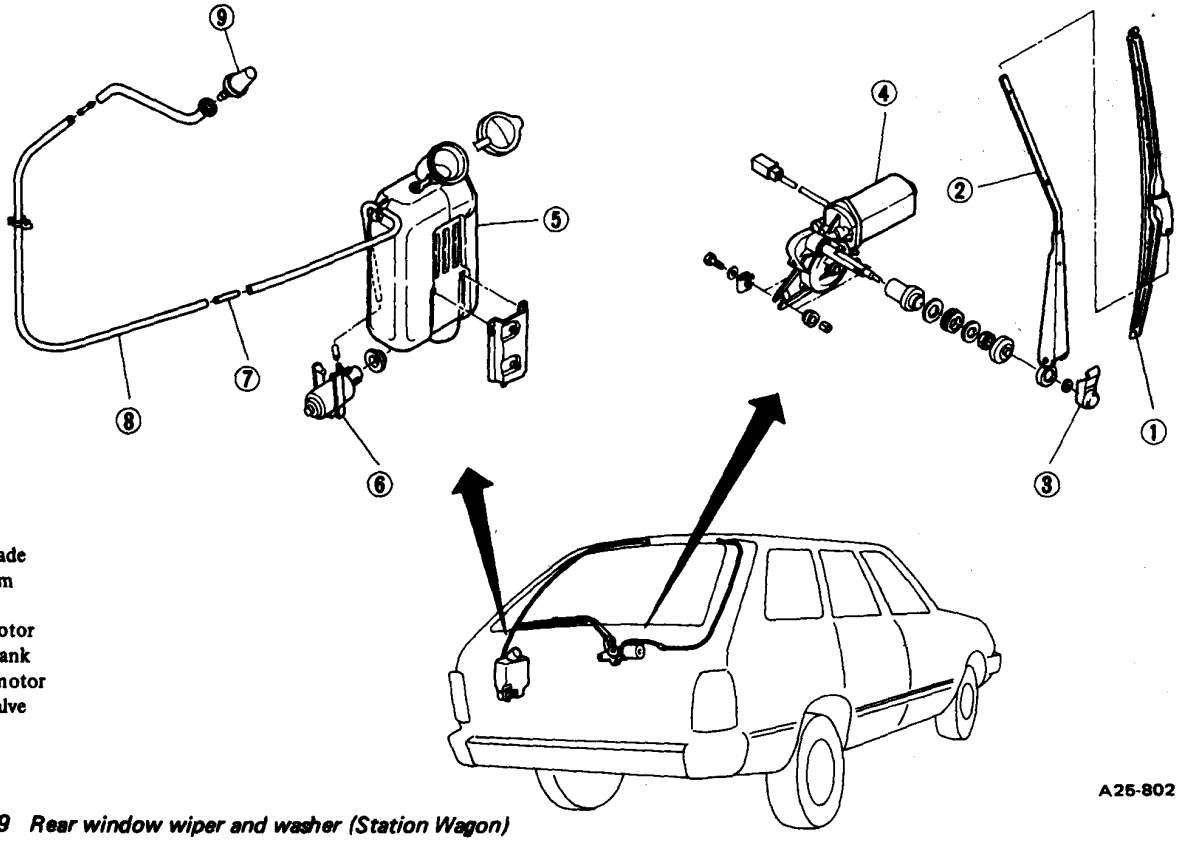

1 Wiper blade
2 Wiper arm
3 Cover
4 Wiper motor
5 Washer tank
6 Washer motor
7 Check valve
8 Hose
9 Nozzle

A25-802

Fig. 15-209 Rear window wiper and washer (Station Wagon)

Downloaded from www.Manualslib.com manuals search engine

• Rear Window Wiper and Washer Switch

The rear window wiper is operated when the switch knob is turned.
While the switch knob is turned further, the washer fluid is jetted onto the surface of rear window glass.

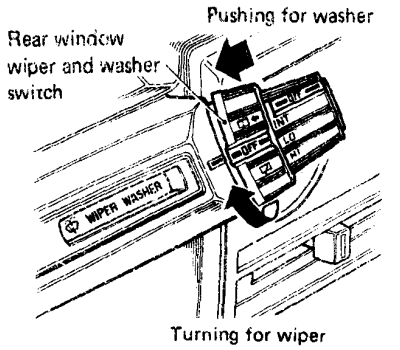

Fig. 15-210

• Electric Circuit

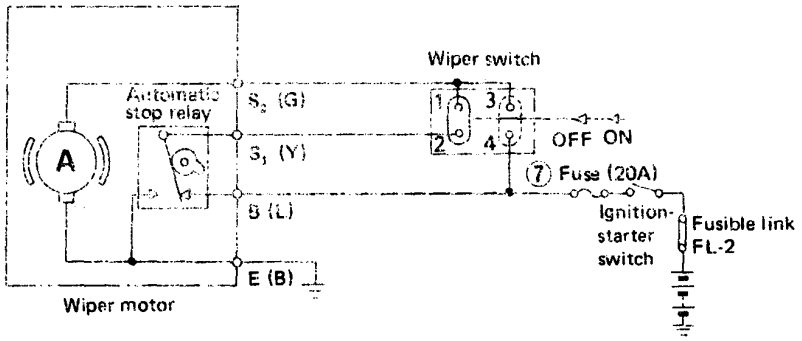

Fig. 15-211

2. Replacement

• Wiper Blade Rubber

Wiper blade rubber can be replaced in the same manner as for the front. (Refer to page 15–67)

• Wiper Assembly

1) Disconnect blade from arms by pushing lever down and sliding them.

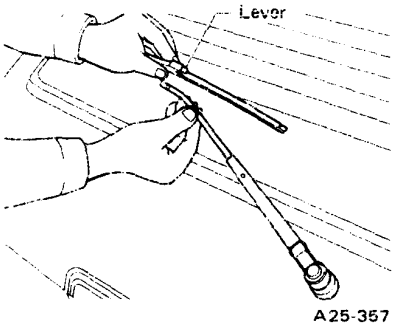

Fig. 15-212 Disconnecting blade

2) Pulling up cover of arm, and take it out.
3) Remove nuts installing arms, and take out them.

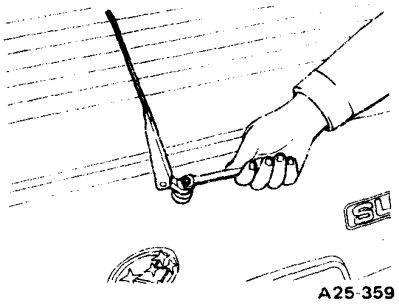

Fig. 15-213 Removing nut

4) Take out caps, nuts and cushions.
5) Take out rear gate trim by removing screws and crips.
6) Disconnect electric wires from wiper motor at connector.
7) Remove bolts installing wiper motor, and take out it.

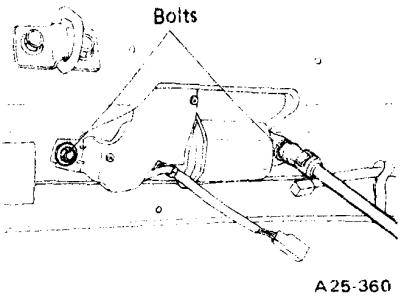

Fig. 15-214 Taking out wiper motor (2-door Hatchback)

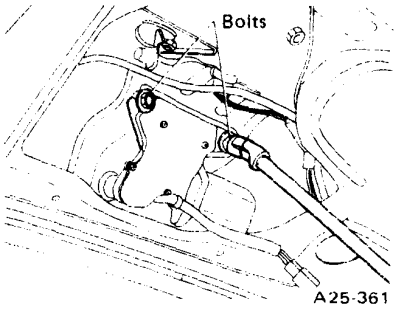

Fig. 15-215 Taking out wiper motor (Station Wagon)

8) For installation, follow the removal procedure in reverse order with some notes as follows.

NOTE:

a. Install wiper arm with nut to specified tightening torque.

Tightening torque	4.4 – 7.4 N·m (0.45 – 0.75 kg-m, 3.3 – 5.4 ft-lb)

b. For 2-door Hatchback and Station Wagon, wiper arm and blade are the same part. However, wiper motor is distinct part.

c. When wiper switch is in "OFF" position, adjust blades in original positions as shown in illustration by changing wiper arm installation.

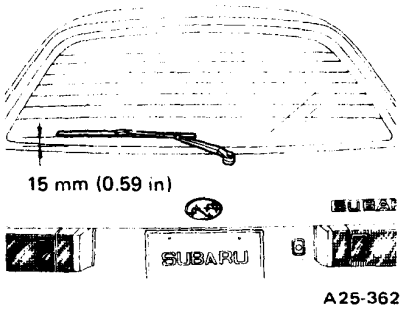

Fig. 15-216 Adjusting wiper blade position (2-door Hatchback)

Downloaded from www.Manualslib.com manuals search engine

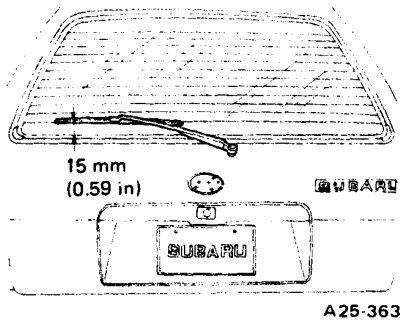

Fig. 15-217 Adjusting wiper blade position (Station Wagon)

- **Washer Tank (2-door Hatchback)**

1) Take out trim by removing screws.
2) Disconnect hose from washer tank and nozzle.
3) Take out drain hose with cap by removing grommet of hose and crips of cap.

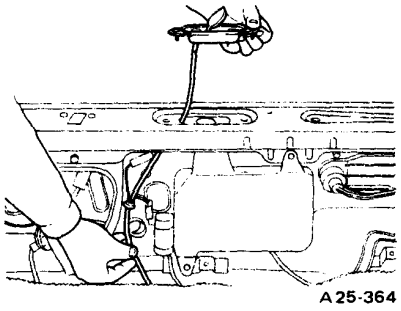

Fig. 15-218 Taking out drain hose

4) Take out washer tank by removing screws.

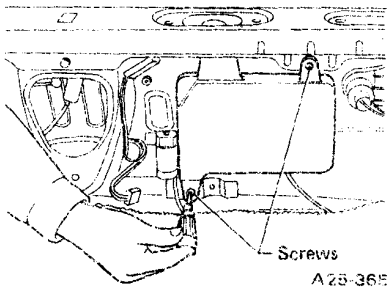

Fig. 15-219 Removing screws

5) Disconnect electric wires from washer pump at connector.

- **Washer Tank (Station Wagon)**

1) Take out trim by removing crips and screws.
2) Disconnect hose from washer tank and nozzle.
3) Take out washer tank by pulling it up.

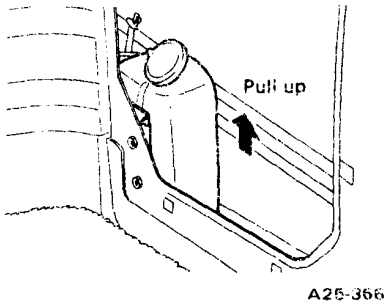

Fig. 15-220 Taking out washer tank

4) Disconnect electric wires from washer pump at connector.
5) For installation, follow the removal procedure in reverse order.

- Hoses

1) Take out roof trim.
2) Remove crips and gum-tapes.
3) Take out joint between hose and rubber hose of nozzle.
4) Take out rubber hose when rear gate is opened.

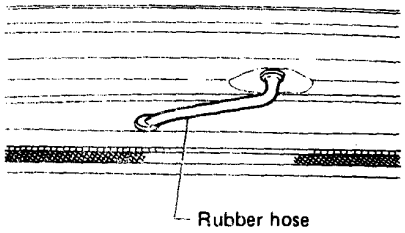

Fig. 15-221 Taking out rubber hose

5) For installation, follow the removal procedure in reverse order.

- Nozzle

1) For 2-door Hatchback, take out nozzle by straightening its claws.
2) For Station Wagon, take out nozzle by straightening its claws. If not available to do so, take out nozzle by cutting it off.

NOTE:
For Station Wagon, check valve is provided at washer tank side of pipe to prevent counter flow from pipe to tank. Therefore, install the pipe as mentioned above.

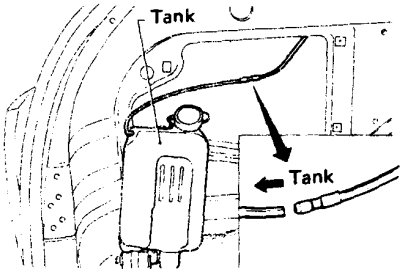

Fig. 15-222 Check valve

Downloaded from www.Manualslib.com manuals search engine

15-11. Electrical Equipment

1. Radio

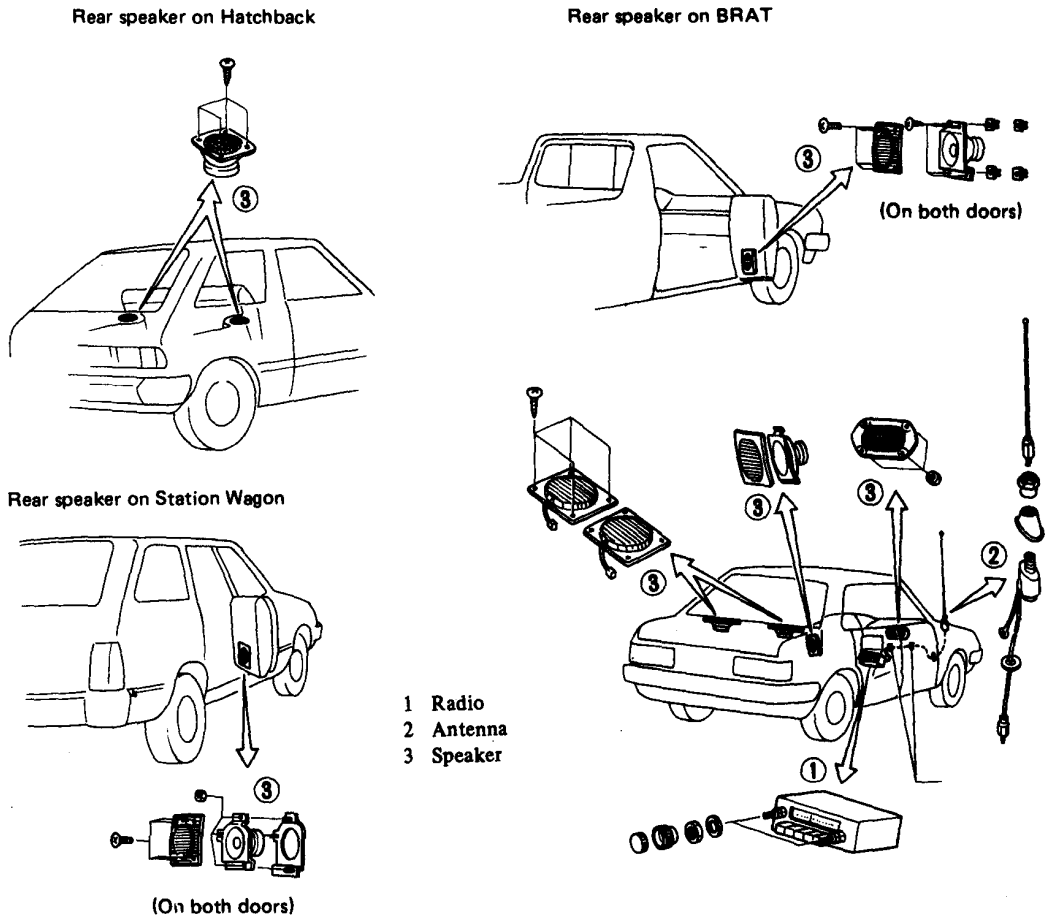

Fig. 15-223 Radio set installation

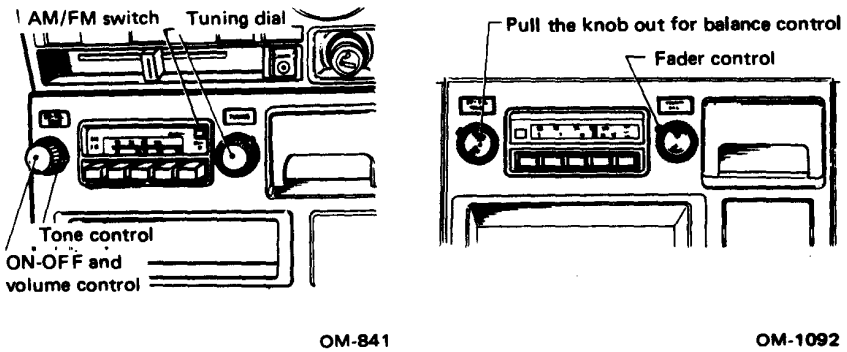

Fig. 15-224

- **Replacement**

1) Radio

a. Take out console box by removing screws.

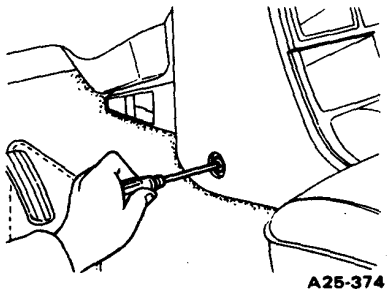

Fig. 15-225 Removing screws

Downloaded from www.Manualslib.com manuals search engine

b. Disconnect electric wires and antenna feeder cord.

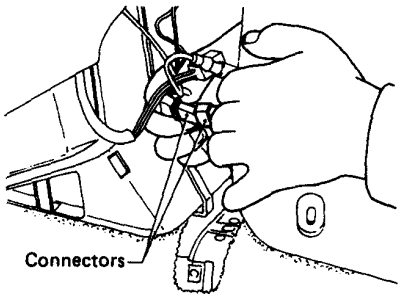

A25-375

Fig. 15-226

c. Pull out turning and volume control knobs.
d. Remove radio mounting nuts.

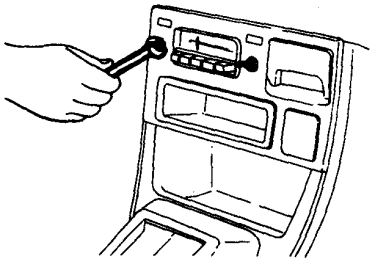

A25-376

Fig. 15-227 Removing mounting nuts

e. Remove radio mounting screw and replace radio.

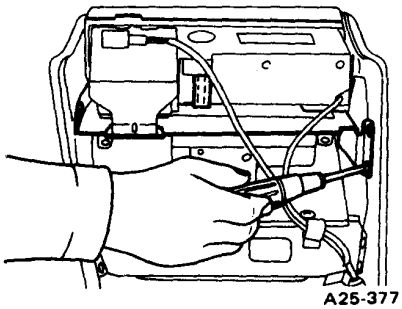

A25-377

Fig. 15-228 Removing mounting screw

2) Speaker in instrument panel
a. Take out glove box by removing installing screws.
b. Remove nuts installing speaker and take out speaker.
c. Disconnect electric wires from speaker at connector.

3) Speaker on left side of instrument panel
a. Detach speaker grille with screwdriver.
b. Remove 3 screws fitting speaker bracket to instrument panel.
c. Take out speaker along with bracket, and replace speaker.

4) Antenna
a. Detach antenna feeder cord from clips inside of instrument panel.
b. Take out front pillar inner trim through that antenna feeder cord enters car.

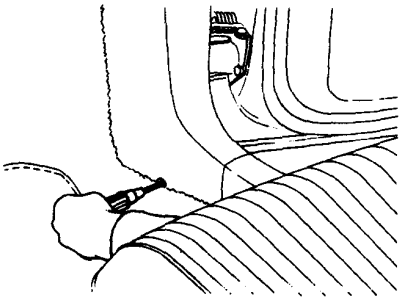

A 25-807

Fig. 15-229 Taking out front pillar inner trim

c. Remove screws installing mud gard, tear mud gard off partially, and pull out antenna feeder cord.

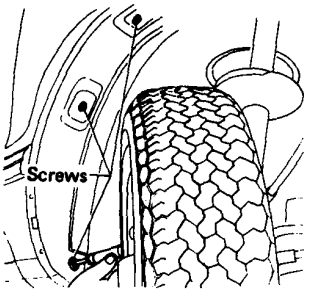

A25-808

Fig. 15-230 Removing screws

d. Detach antenna rod.
e. Remove nut and take cover out.

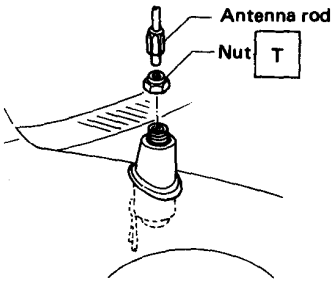

Tightening torque N·m (kg-m, ft-lb)
T: 3 - 6 (0.3 - 0.6, 2.2 - 4.3)

Fig. 15-231 A25-809

f. Remove bolt installing antenna earth cord, and pull antenna down.

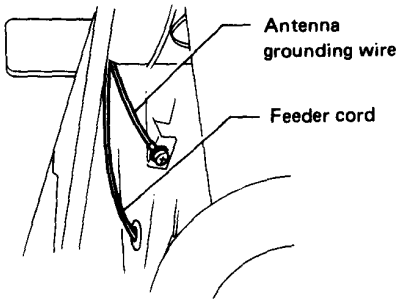

A25-810

Fig. 15-232

• Adjustment

1) Setting push button
There are five push buttons, so five stations are selected as follows.
a. Select a station by turning the turning dial.
b. Pull the push button and push it back, and then the push button is kept set at the station required.

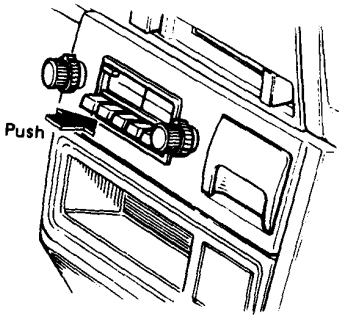

OM-742

Fig. 15-233 Setting push button

NOTE:
a. Confirm the push button is set at the center of the channel, otherwise the tone becomes bad according to an amount of discrepancy from the center of the channel.
b. For FM/AM radio, push the FM push button once before selecting FM station.

2) Adjusting antenna trimmer
Antenna trimmer is adjusted in order to make each radio sensitive in case the sensitivity is poor or abnormal noise exists (AM band only).

Downloaded from www.Manualslib.com manuals search engine

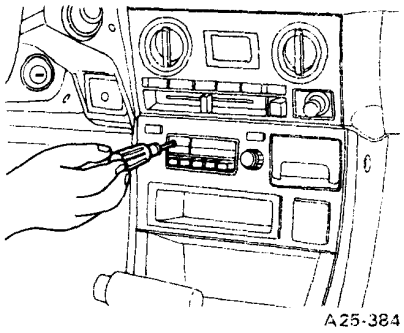

Fig. 15-234 Adjusting antenna trimmer

a. Attach antenna rod in position.
b. Select the channel of a weak station between 1,400 kHz and 1,600 kHz.
c. Adjust antenna trimmer to make the sensitivity in maximum.

NOTE:
Antenna trimming is available only for AM band.

2) Prevention of abnormal noise
a. Intermitting of contacts in ignition system, alternator, and contact points of brushes in motors are sources which make an abnormal noise in radio. In order to prevent abnormal noise, high tension cord which contains resistance, condensers of ignition coil, and grounding wire to body from engine are provided.

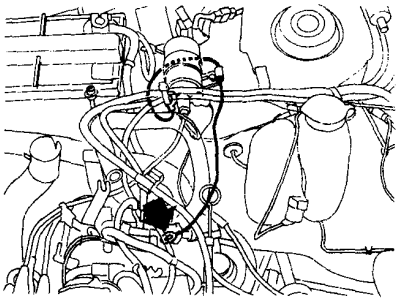

Fig. 15-235 Condenser of ignition coil

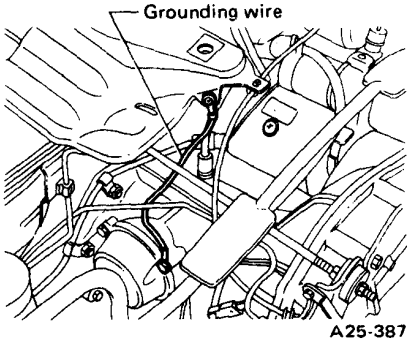

Fig. 15-236 Grounding wire of engine

b. Antenna is grounded to body through antenna installing bolts, when screws are not tightened securely, it makes abnormal noise. So, tighten antenna installing bolts securely.

2. Horn

Horn switch is incorporated in steering wheel. When horn button is pushed down to actuate horn switch regardless of any position of ignition-starter switch, horn make a sound.

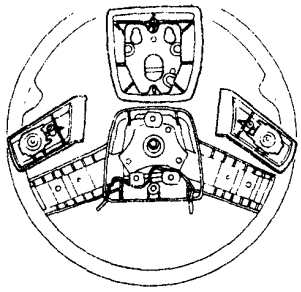

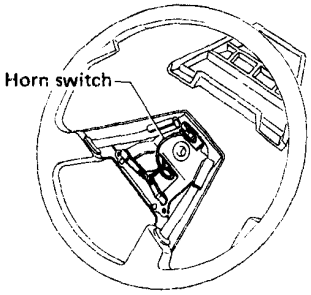

Fig. 15-237 Horn switch

All models except Hatchback STD & 4WD STD are equipped with double horns which consists of high tone and low tone horns. Hatchback STD & 4WD STD has high tone horn only.

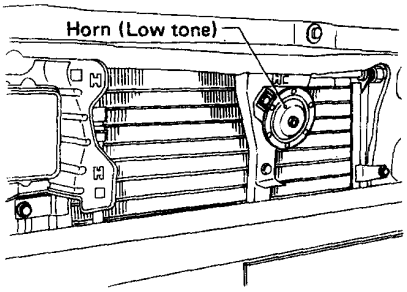

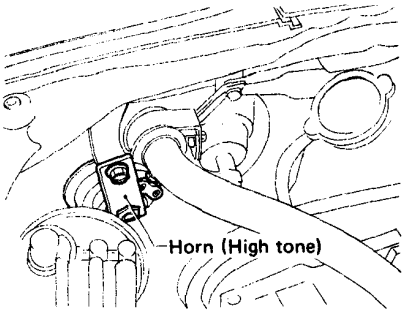

Fig. 15-238

• Removal & Installation

1) For low tone horn, take out front grille, disconnect electric wire from the horn and then take out it by removing bolt.
2) For high tone horn, disconnect electric wire from the horn and then take out it by removing bolt.
3) For installation, follow the removal procedure in reverse order.

NOTE:
After installing horn, connect electric wire with it by keeping some slack to prevent wire from disconnecting by its vibration.

3. Cigarette Lighter

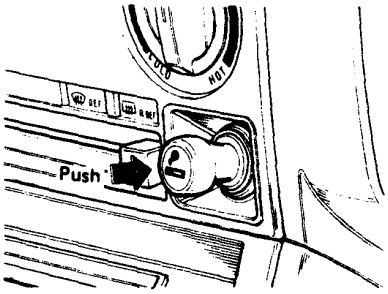

Fig. 15-239 Cigarette lighter

• Removal

1) Pull out knob of air outlet control lever, temperature control dial and dial of fan motor switch.
2) Take out heater & ventilator control panel by removing screws after pulling down console box by removing screws.

Downloaded from www.Manualslib.com manuals search engine

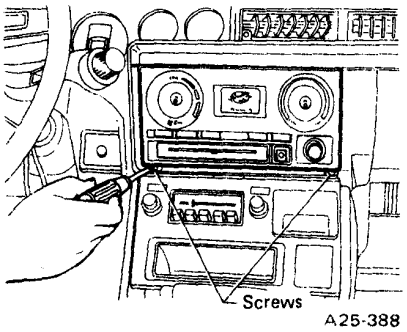

Fig. 15-240 Taking out control panel

3) Disconnect electric wires from cigarette lighter.
4) Remove socket by turning it counterclockwise.

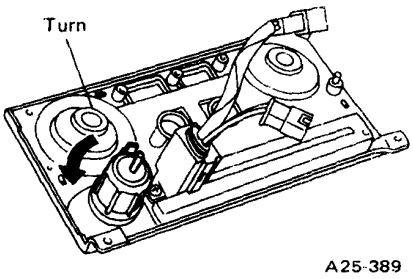

Fig. 15-241 Turning socket

CAUTION:
In case of replacing cigarette lighter, use genuine part only and always replace both knob and socket combination.

4. Rear Window Defogger

Rear window defogger is actuated when rear window defogger switch is turned to "ON" with ignition-starter switch "ON". Indicator light on center of the switch knob glows when operating rear window defogger.

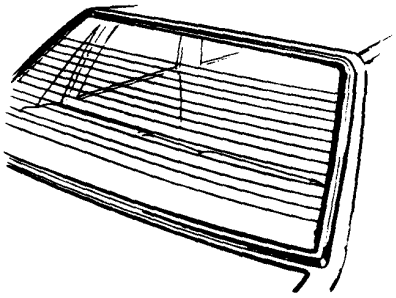

Fig. 15-242 Rear window defogger

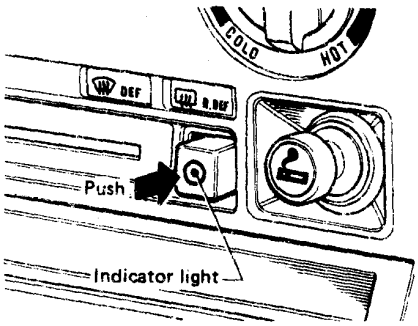

Fig. 15-243 Rear window defogger switch

• Removal and Bulb Replacement of Switch

1) Take out heater and ventilator control panel after pulling down console box by removing screws.
2) Disconnect electric wire from the switch.

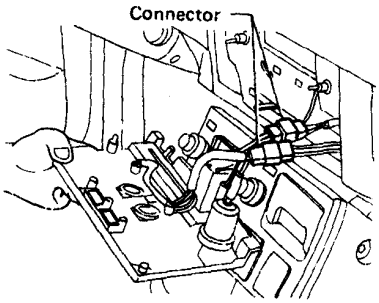

Fig. 15-244 Disconnecting electric wire

3) Take out the switch by removing installing screws.

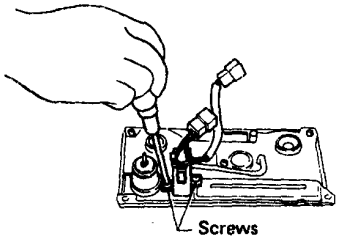

Fig. 15-245 Removing screws

4) Pull out socket by turning it counterclockwise.
5) Pull out bulb from socket and change it.

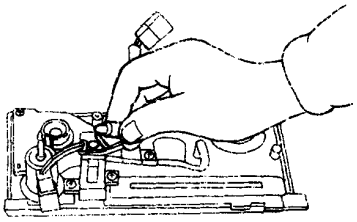

Fig. 15-246 Bulb replacement

• Inspection of Heat Wire

1) Start engine, and turn rear defogger switch on.
2) Check each heat wire at its center position for discontinuity by setting direct-current voltmeter.

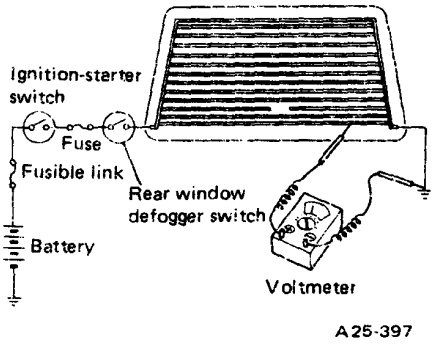

Fig. 15-247 Checking by voltmeter

3) If meter indicates 12 volts or 0 on specific wire that line is broken. Normal indication is about 6 volts.
4) For finding out broken position in the line, move positive lead of voltmeter along the line until abrupt variation in the meter indication is encountered.

• Repair Procedure

1) Clean broken wire and its surrounding area.
2) Cut off slit on (used) thin film by 0.5 mm (0.020 in) width and 10 mm (0.39 in) length.
3) Place the slit on glass along the broken wire, and deposit conductive silver composition (DUPONT No. 4817) on the broken portion.

Downloaded from www.Manualslib.com manuals search engine

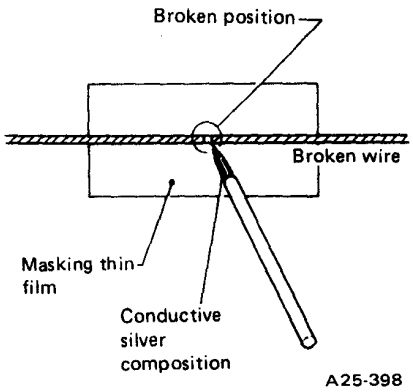

Fig. 15-248 Depositing composition

4) Dry out the deposited portion.
5) Inspect the repaired wire for continuity.

5. Seat Belt & Key Warning Chime

Seat belt & key warning chime participates in both seat belt warning system (all models) and key warning system (except 4WD).

1) Seat belt warning system

Fasten seat belt warning light in combination meter turns on for approx. six (6) seconds after turning ignition-starter switch to ON position.

Also, only when driver's seat belt is not fastened, the chime will sound about four (4) times.

2) Key warning system (except 4WD)

The chime will sound while door is opened with the key plate inserted in ignition-starter switch.

	Key plate position in ignition-starter switch	
	(START), ON	ACC, OFF, LOCK
Hatchback STD	Zone A	Zone A
Others (except 4WD)	Zone A	Zone B

Zone A: The chime will sound while only front driver's door is open.

Zone B: The chime will sound whenever front door, rear door or rear gate is opened.

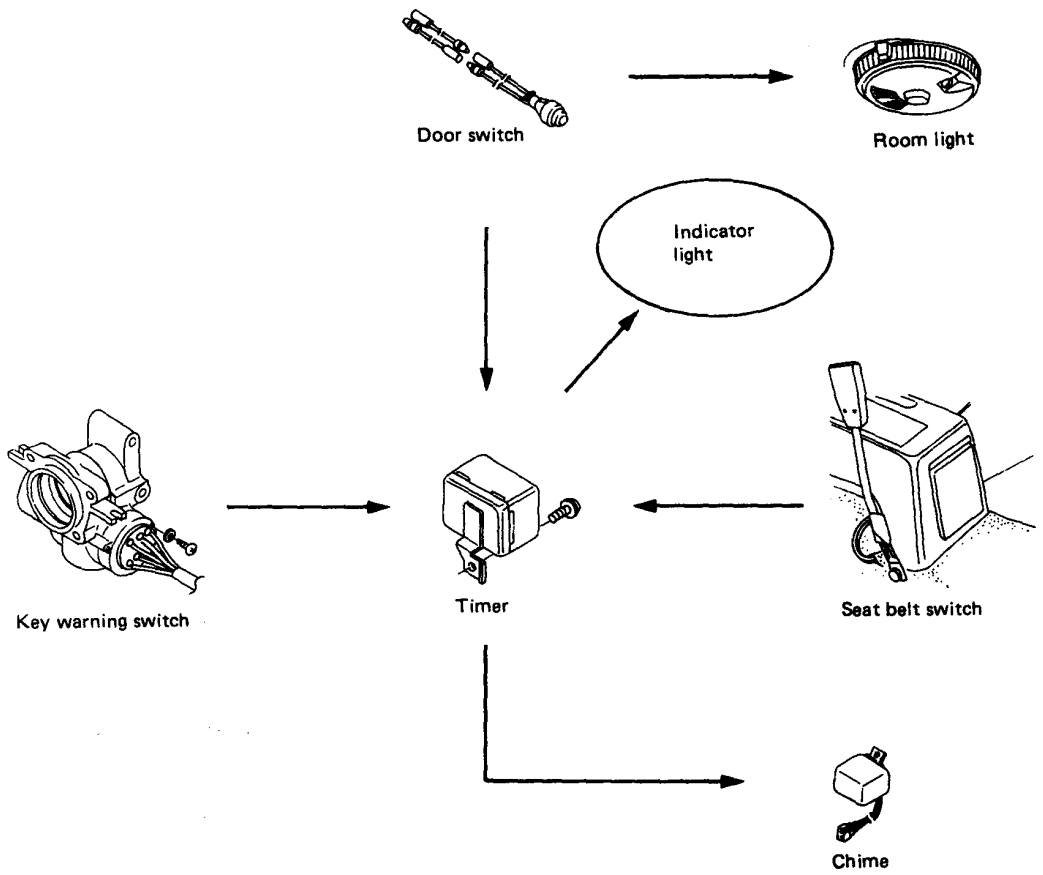

Fig. 15-249

Downloaded from www.Manualslib.com manuals search engine

- **Removal**

1) Timer
a. Remove trim panel under instrument panel on driver's side.
b. Disconnect electric connector from timer.
c. Remove a screw, and take out timer.
2) Chime
a. Remove screws, and take out glove box.
b. Disconnect electric connector for chime.
c. Remove a screw, and take out chime.

- **Installation**

1) Timer
a. Install timer by tightening a screw.
b. Connect electric connector to timer.

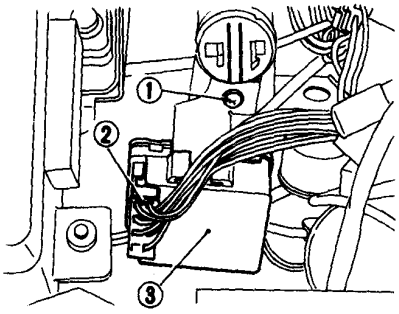

1 Screw
2 Connector
3 Timer

A25-618

Fig. 15-250

c. Install trim panel under instrument panel on driver's side.
2) Chime
a. Install chime by tightening a screw.
b. Connect electric connector for chime.

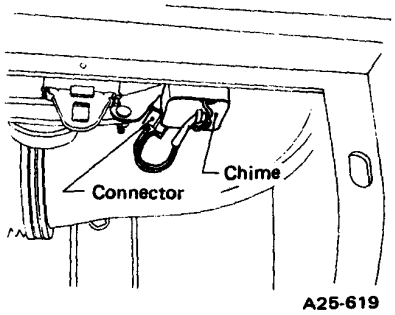

A25-619

Fig. 15-251

c. Install glove box by tightening screws.

6. Power Window (Option)

Electric motors are provided for window glass regulator of each door and rear quarter (Hardtop) to open and close the window.

1 Motor (Front, RH)
2 Sub switch (RH)
3 Motor (Rear, RH)
4 Control unit
5 Motor (Front, LH)
6 Main switch
7 Relay CP (Relay & Breaker)
8 Auto switch (Front, LH)
9 Motor (Rear, LH)
10 Sub switch (LH)

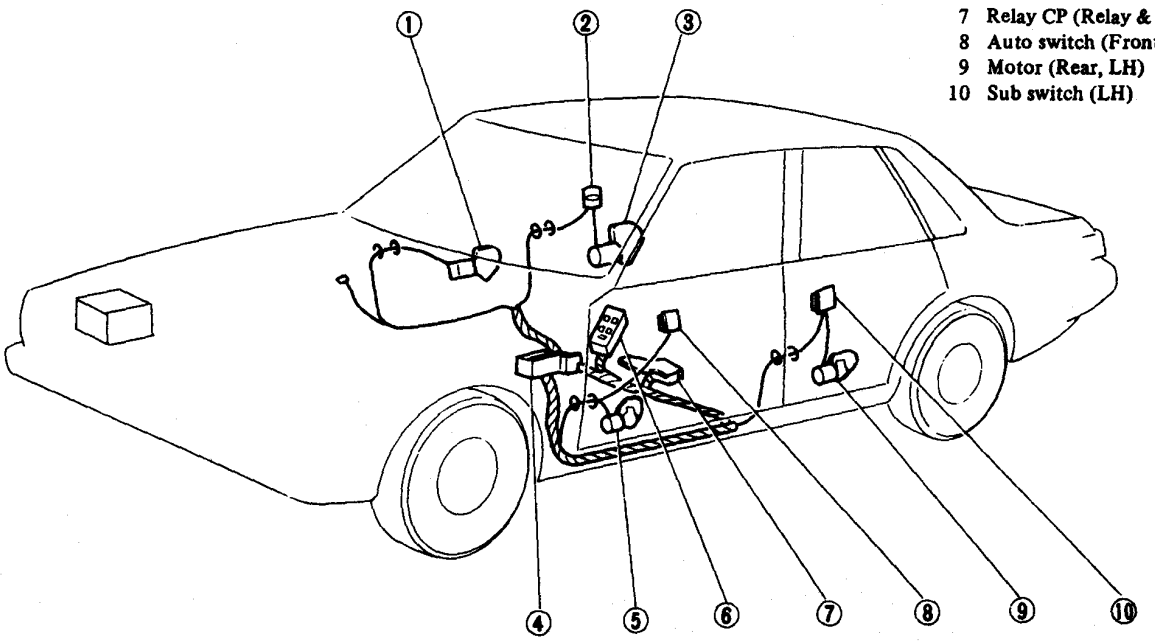

A25-531

Fig. 15-252

Downloaded from www.Manualslib.com manuals search engine

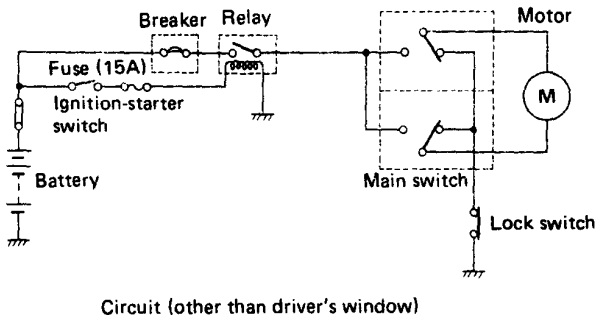

Fig. 15-253 Circuit (driver's window)

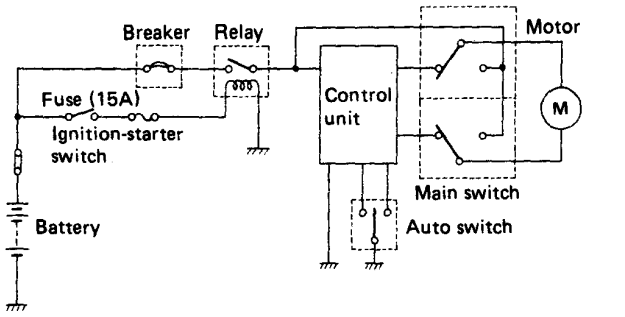

Fig. 15-254 Circuit (other than driver's window)

- Main switch

Main switch is located on center arm rest, and has four (4) switch knobs and a lock switch knob that makes the three (3) motors other than the one for the driver's window inoperative. Each window is lowered or raised while the applicable switch knob is operated with the lock switch up (OFF).

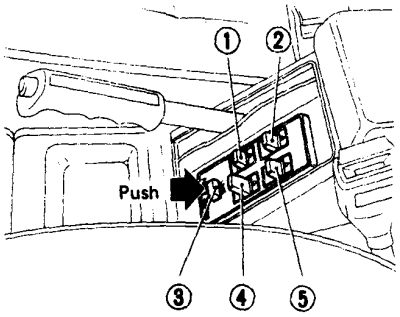

1 Front passenger's window
2 Rear right window
3 Lock switch
4 Driver's window
5 Rear left window

A25-818

Fig. 15-255 Main switch

Remove main switch by removing screws behind center arm rest, after removing screws fitting center arm rest onto body, and disconnecting its connector.

- Sub switch

Sub switch is provided for both rear doors or rear quarter. Each rear window is lowered or raised while its switch is operated with the lock switch in main switch panel up (OFF).

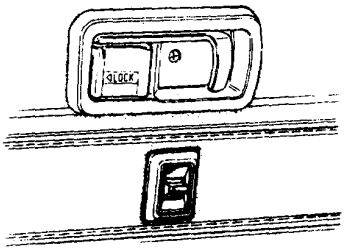

OM-737

Fig. 15-256 Sub switch on rear door

Remove sub switch by drawing out its clip after taking out door trim (or rear quarter trim) and disconnecting its connector.

- Auto switch

Auto switch is located only at driver's door and controls drive's window automatically in combination with control unit.
Driver's window can be opened or closed fully by lifting or depressing on the auto switch for a moment.
Furthermore, driver's window can be stopped on the way by operating the auto switch for a moment in reverse direction of the window movement.

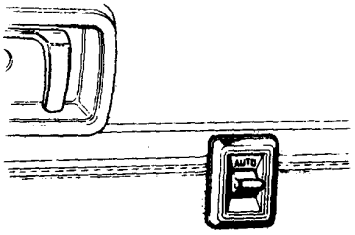

OM-736

Fig. 15-257 Auto switch

Also remove auto switch by drawing its clip out after taking out the door trim and disconnecting its connector.

- Control unit

Control unit is fixed with bracket for hood lock release lever. The control unit consists of transistors, relay, transformer etc. and controls up and down of driver's window in combination with auto switch.

- Relay and Breaker

Relay and breaker are installed under driver's sheet. The relay provides an ignition interlock to all switches so that windows cannot be operated unless the ignition-starter switch is in "ON" position for safety.
When overcurrent flows, breaker cuts electric current to components and electric wiring from damage and burn out.

Downloaded from www.Manualslib.com manuals search engine

7. Cruise Control (Option)

1) General

The cruise control automatically controls car speed and allows the car to run at a constant speed without depressing the accelerator pedal. In operation, when the driver sets a desired speed with the cruise control switch, the built-in micro-computer compares the speed set in the memory with the actual running speed detected by feedback signals from the speedometer. This feedback system operates the throttle of carburetor to correct the speed difference, thereby keeping the car at a constant speed.

NOTE:

a. The cruise control must never be used in the following driving conditions.
- **(1) When going up or coming down a steep slope**
- **(2) On roads with poor traction, for example, snow-covered, icy, or gravel roads**
- **(3) When a strong wind is blowing**
- **(4) In congested traffic**
- **(5) On a road with many curves**

b. Modification of this device must never be attempted.

c. The main switch of the cruise control must always be turned off, except when in use.

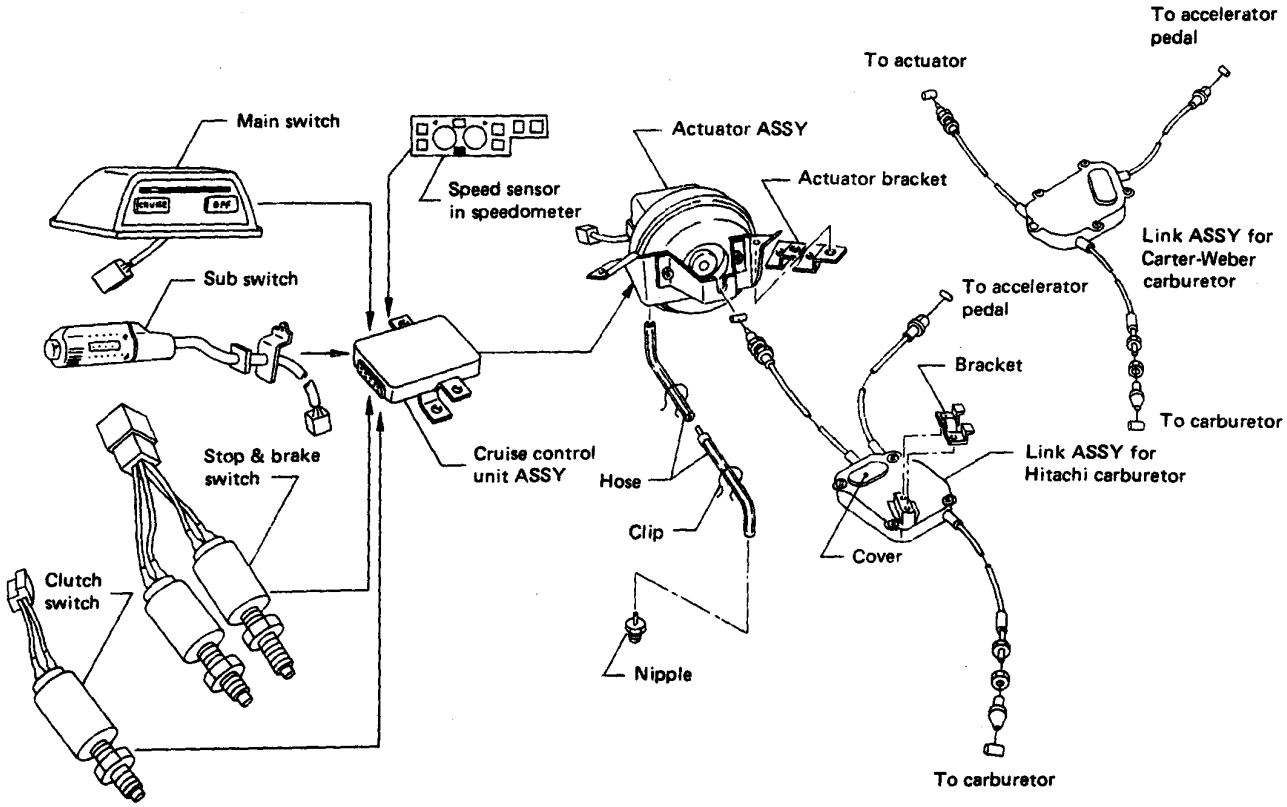

Fig. 15-258

Downloaded from www.Manualslib.com manuals search engine

2) Operation and Function

Set function	If the set switch is turned on while running at speeds between 40^{+0}_{-5} and 140^{+0}_{-5} km/h (25^{+0}_{-3} and 87^{+0}_{-3} MPH), the then car speed will be set in the memory of the cruise control unit and the car will maintain that constant speed.
Resume function	• With the preset speed in the memory, if the resume switch is turned on while running at a speed within the speed setting range, the car will accelerate up to the memorized speed and maintain that constant speed. • If the resume switch is kept "ON" at a speed over 40 km/h (25 MPH), acceleration will continue (up to the limit of the engine output). If the resume switch is turned off, the car will slow down to the memorized speed and maintain that constant speed. (Without any speed in the memory, the system will be turned off.) **NOTE:** **If the main switch is turned on, the car will accelerate by means of resume switch even without any speed set in the memory.**
Coast function	If the coast switch is turned "ON" when the car is running at a constant speed, the car will decelerate. If the coast switch is turned off while running at a speed within the speed setting range, the speed at which the car is running when the switch is turned off will be set in the memory again and the car will maintain that constant speed. **NOTE:** **Even when no speed is set in the memory, if the main switch is on and the car is running at a speed within the speed setting range, the then car speed can be set by releasing the sub-switch after having turned it to the coast position.**
Cancel function	The function of the cruise control will be canceled by the following operations or in the following conditions. *(a) When the main switch is turned to "OFF". *(b) When the ignition-starter switch is turned to "ACC" or "OFF" (c) Depressing the brake pedal The brake pedal is provided with a brake switch (N.C) and stop switch (N.O). When the pedal is depressed, the switch connections are reversed, causing the signal to be transmitted to the cruise control unit. (d) Depressing the clutch pedal The clutch pedal is provided with a clutch switch (N.C). When the pedal is depressed, the switch connections are reversed, causing the signal to be transmitted to the criuse control unit. (e) Shifting the select lever to Ⓝ (AT vehicle only) This actuates the inhibitor switch (N.O) and the signal is input to the unit. *(f) When the engine speed reaches 5,500 rpm or more (g) When the car speed slows down to 40^{+0}_{-5} km/h (25^{+0}_{-3} MPH) or less *(h) When the car speed signal varies more than ±25 km/h (± 16 MPH) per second, including the vibration of the speedometer cable *(i) When the car has decelerated more than 15 km/h (9 MPH) from the memorized speed *(j) When the resume switch and set switch are operated simultaneously, or when the coast switch and set switch are operated simultaneously * In the operations (a), (b), (f), (h), (i), and (j), the memory will also be erased. In the others, the cruise control will be functionally canceled temporarily but the pre-set speed will remain in the memory.

Downloaded from www.Manualslib.com manuals search engine

3) Cruise Control Unit

The cruise control unit compares the actual car speed detected by feedback signals from the speedometer with the speed set in the memory memorized when the set switch was turned on. A signal is then transmitted according to the difference between the two speeds.
This signal is transmitted to the solenoid valve of the vacuum actuator located in the engine compartment. The movement of the actuator operates the carburetor throttle valve, thereby keeping the car speed constant.

Detection of car speed

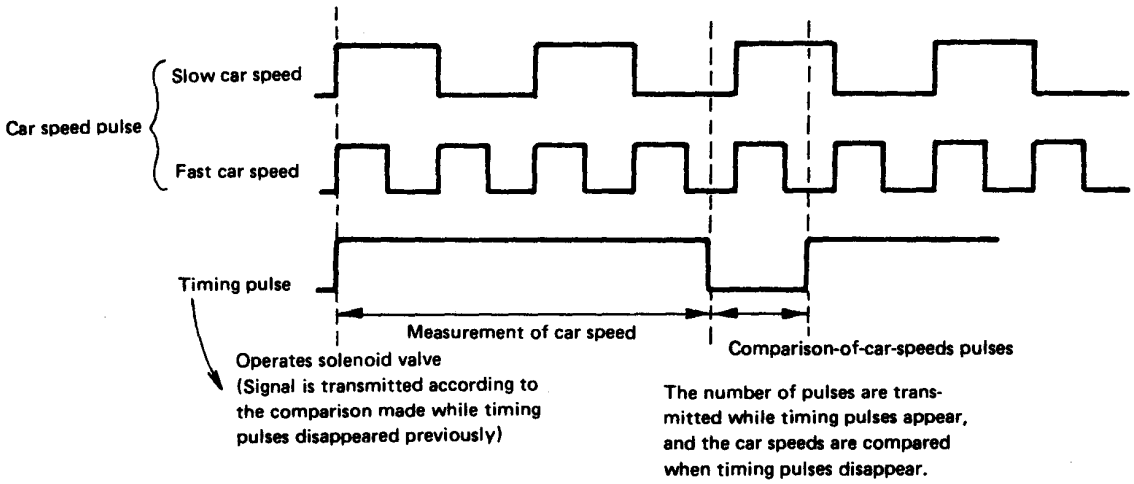

4) Actuator

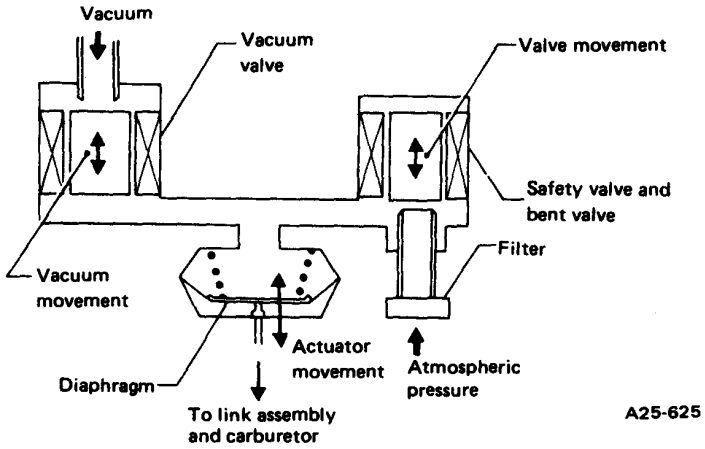

Fig. 15-259

The actuator has a vacuum valve, vent valve, and safety valve. The opening and closing of each valve introduces a vacuum from the engine or air at atmospheric pressure into the actuator to operate the diaphragm, which in turn operates the carburetor throttle valve.

			Vacuum	Inside actuator	Atmosphere
Operation of valves	Vacuum valve	Electrified	O	O	
		Not electrified		Valve closes	
	Vent and safety valves	Electrified		Valve closes	
		Not electrified		O	O

When the cruise control is out of operation, the safety valve and vent valve are opened and the vacuum valve is closed. Therefore, the inside of the actuator is at atmospheric pressure, and the diaphragm does not operate.
During constant-speed driving with the main switch on, the safety valve closes, and the vacuum valve and vent valve open and close to introduce a vacuum or air at atmospheric pressure into the vacuum actuator. This moves the diaphragm, which operates the carburetor throttle valve to provide control over the car speed.

Downloaded from www.Manualslib.com manuals search engine

		Safety valve	Vacuum valve	Vent valve
System OFF		Open	Close	Open
System ON	Memory < actual speed	Close	Close	Open
	Memory = actual speed	Close	Close	Close
	Memory > actual speed	Close	Open	Close

5) Cruise Control Switch

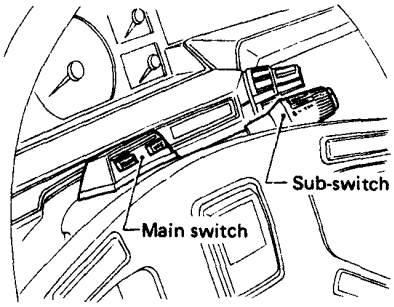

A25-626

Fig. 15-260

1. Main switch

This is a push-button switch located on the steering column and is the main power switch of the cruise control.
When the cruise button is depressed, the green pilot lamp above the button illuminates and an electric current flows in the cruise control unit.

2. Sub-switch (Set lever)

Pushing the tip of the sub-switch knob allows the set signal to be entered in the cruise control unit. The resume signal and coasting signal are entered, respectively, by turning the knob in the forward and backward directions of the car.

6) Cancel Switch

1. Stop & brake switch

The stop switch and brake switch are fitted to the brake pedal. The stop switch functions as an ordinary stop light switch. When the brake pedal is depressed, the stop switch is turned on and the brake switch is turned off. These two kinds of signals will cancel the function of the cruise control if the pedal is depressed when driving with the cruise control in operation. However, the pre-set car speed will remain in the memory of the cruise control unit.

2. Clutch switch (MT vehicle only)

The clutch switch is fitted to the pedal bracket. When the clutch pedal is depressed, the clutch switch is turned off and the operation of the cruise control is canceled. However, the pre-set car speed will remain in the memory of the cruise control unit.

3. Inhibitor switch (AT vehicle only)

The inhibitor switch is attached to the automatic transmission select lever. When the select lever is shifted to the "N" range, the switch turns on to cancel the operation of the cruise control. However, the pre-set car speed will remain in the memory of the cruise control unit.

7) Link Assembly

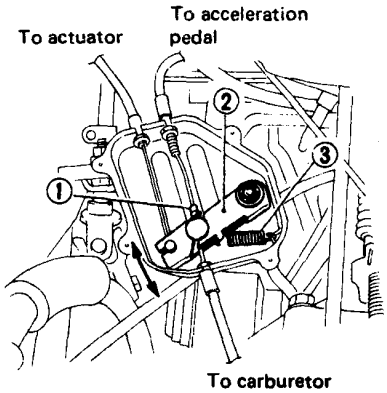

1 Stopper
2 Lever
3 Return spring

A25-627

Fig. 15-261

When the cruise control operates, the actuator pulls the lever ② through the cable connecting the actuator to the link ASSY. This movement causes the lever ② to pull the stopper ① of the cable connecting the accelerator pedal to the carburetor. Thus the carburetor is controlled without depressing the accelerator pedal.
Further, if the accelerator pedal is depressed in this state, the cable connecting the accelerator pedal to the carburetor is pulled, so that the carburetor throttle lever can be operated regardless of the movement of the lever ② caused by the actuator.

8) Repair of Component Parts

- **Cruise control unit**

The cruise control unit is attached to bracket for turn signal and hazard signal unit, on the right underneath instrument panel. To remove, loosen screws.

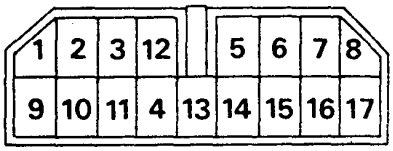

A25-629

Fig. 15-262 Connector terminal for cruise control unit

Downloaded from www.Manualslib.com manuals search engine

Terminal			Description
No	Color of wire	–	
①	–	–	–
②	BY	Inhibitor switch (AT vehicle only)	This terminal is grounded only when the select lever is set to the Ⓝ or Ⓟ range. (No terminal is provided in the MT vehicle.)
③	GY	Clutch switch	MT vehicle: This terminal is usually grounded, and is disconnected from ground when the clutch pedal is depressed. AT vehicle: It is always grounded.
④	Br	Main switch	If the main switch is turned on with the ignition-starter switch on, the battery voltage is transmitted. The voltage is cut off when it is turned off.
⑤	YR	Speed sensor	When the speedometer cable rotates with the ignition-starter switch on, on-off signals at more then 5V and 0V are repeatedly transmitted.
⑥	B	Ground	This is always grounded. (grounding wire of the control unit)
⑦	G	Vacuum valve	The signal for operating the vacuum valve is input.
⑧	YB	Resume switch	If the resume switch is turned with the ignition-starter switch on, the battery voltage is transmitted. The voltage is cut off if it is returned.
⑨	BR	Brake switch	With the ignition-starter switch on, the battery voltage is transmitted. When the brake pedal is depressed, the voltage becomes 0V.
⑩	Y	Ignition coil	It transmits ignition pulse signals while the engine is running.
⑪	WB	Valve (common)	While the cruise control is operating, the battery voltage is transmitted from the control unit to each valve.
⑫	YW	Check	This is the check terminal used for quality inspection in the production line. [The cruise control can be temporarily canceled by entering a pulse signal corresponding to the engine speed of 5,500 rpm or more.]
⑬	LW	Vent valve	The signal for operating the vent valve is transmitted.
⑭	–	–	–
⑮	W	Set switch	If the set button is pressed with the ignition-starter switch on, the battery voltage is transmitted. The voltage becomes 0V if it is returned.
⑯	L	Coasting switch	If the coasting switch is turned with the ignition-starter switch on, the battery voltage is transmitted. The voltage is cut off if the switch is returned.
⑰	GB	Stop switch	When the brake pedal is depressed, the battery voltage is transmitted. The voltage is cut off when it is released.

NOTE:

a. Of the above terminals, the signal from ⑦, ⑪, and ⑬ are not transmitted unless the cruise control unit is actually operated with the unit connected to the electric wire.

b. Check each of the terminals according to the troubleshooting chart.

Downloaded from www.Manualslib.com manuals search engine

- **Cruise control switch**

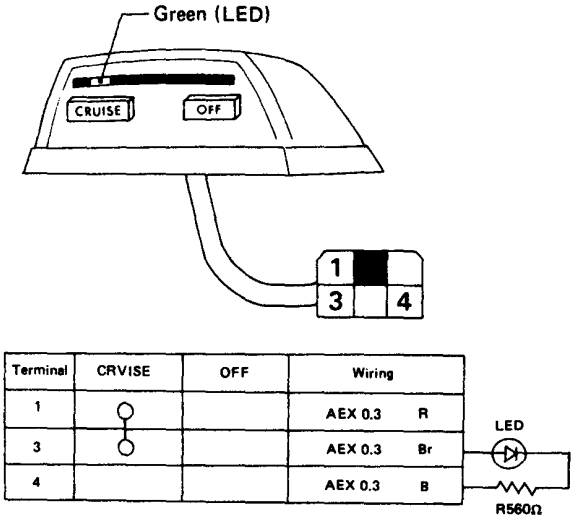

Terminal	CRVISE	OFF	Wiring
1	○		AEX 0.3 R
3	○		AEX 0.3 Br
4			AEX 0.3 B

A25-630

Fig. 15-263 Main switch

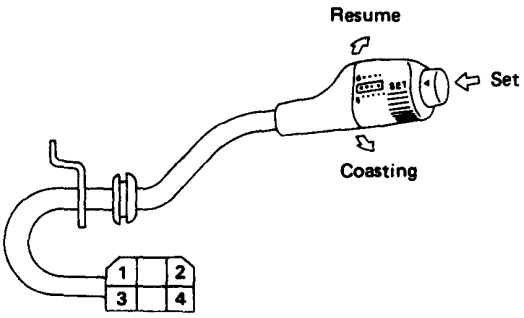

Operation \ Terminal / Wiring	1 AEX 0.3R	2 AEX 0.3Y	3 AEX 0.3L	4 AEX 0.3W
CRUISE				
RESUME	○	○		
COAST	○		○	
SET	○			○

A25-631

Fig. 15-264 Sub-switch

Replace main switch and/or sub-switch as follows.

1) Lower steering column.
2) Remove steering wheel cover.
3) Remove steering wheel.
4) Divide steering column cover in two, then remove electric connector.
5) Remove four tapping screws from the back of the column cover, then replace main switch.
6) Remove sub-switch from ignition-starter switch by loosening two screws, then install a (new) sub-switch there.

NOTE:
When installing column cover, be careful to prevent electric wire from becoming entangled with other parts.

- **Clutch switch (MT vehicle only)**

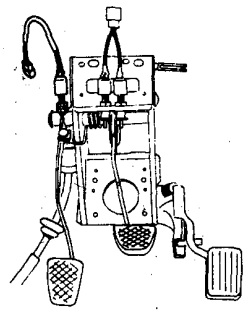

A25-632

Fig. 15-265

1) To remove or install clutch switch, remove connector for the switch and nut (B) on the underside of the switch.

Tightening torque (Nut B)	5.4 – 9.3 N·m (0.55 – 0.95 kg-m, 4.0 – 6.9 ft-lb)

2) Adjust the free play of clutch pedal by loosening or tightening nut (B) on the underside of clutch switch.

Free play of clutch pedal	13 – 20 mm (0.51 – 0.79 in)

NOTE:
Before starting the adjustment, electric connector should be removed to prevent the wire from being twisted. Firmly connect the connector after the adjustment.

9) Cable Play Adjustment

- **Vehicle with HITACHI carburetor**

Adjust cable play in the following procedure by retightening nuts ①, ② and ③.

1) Adjust dimension "A" between the stopper and lever in the link ASSY to approx. 2 mm (0.08 in) while pulling the cable at position 4 toward the throttle lever, and then retighten nuts ①.
2) Adjust deflection "B" to less than 20 mm (0.79 in) [or free play "C" to less than 4 mm (0.16 in)] without movement of the throttle lever, and then retighten nuts ②.
3) Loosen nuts ③ and detach the grommet of the actuator. Retighten nuts ③ so that the throttle lever will start moving when pushing the diaphragm in the actuator by approx. 5 mm (0.20 in).

Downloaded from www.Manualslib.com manuals search engine

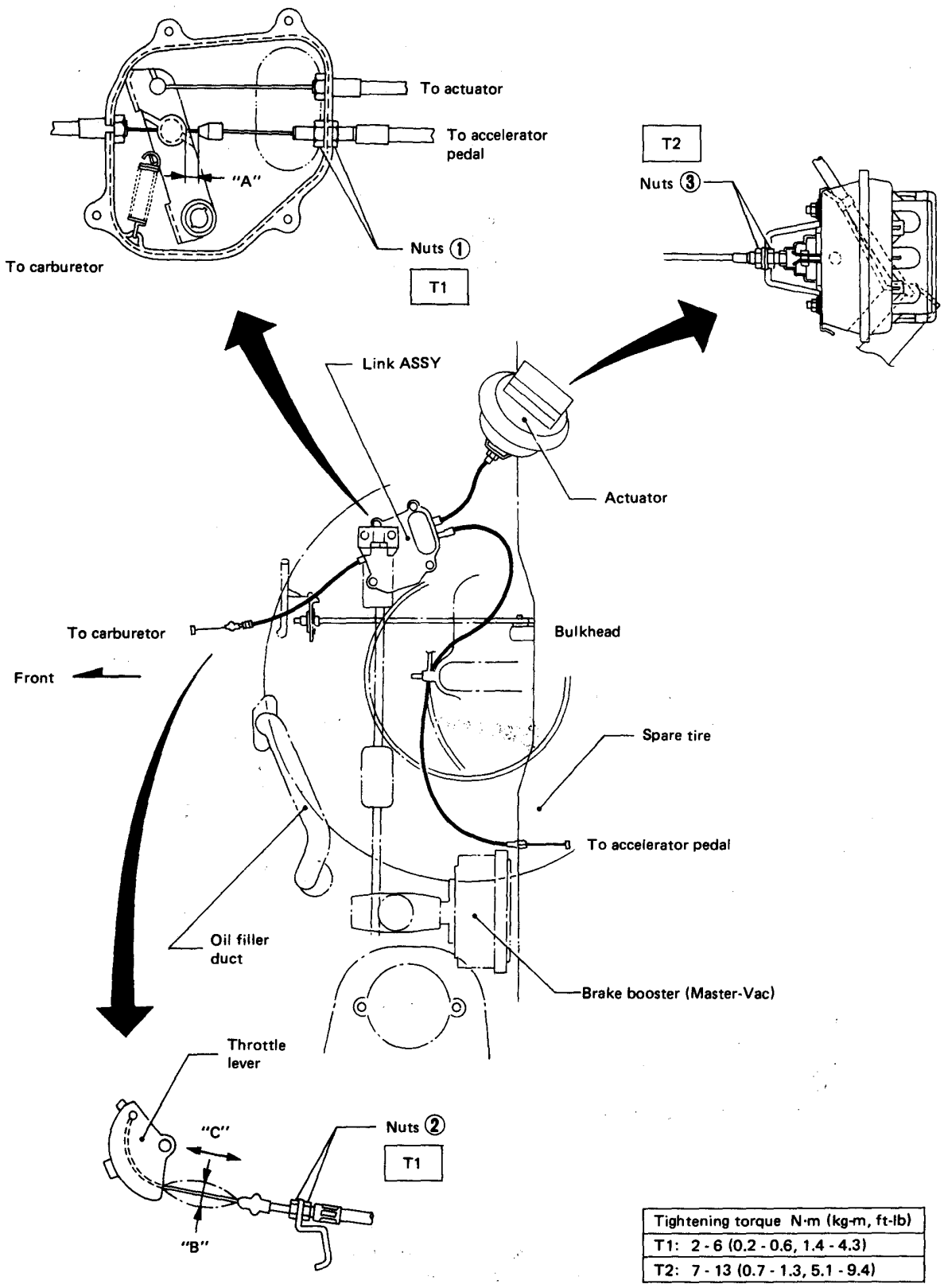

Tightening torque N·m (kg-m, ft-lb)
T1: 2 - 6 (0.2 - 0.6, 1.4 - 4.3)
T2: 7 - 13 (0.7 - 1.3, 5.1 - 9.4)

A25-820

Fig. 15-266

Downloaded from www.Manualslib.com manuals search engine

- **Vehicle with CARTER-WEBER carburetor**

Operation

Three cables connect to the drums in the link ASSY.

- Cable A from accelerator pedal → Upper drum
- Cable B from carburetor → Center drum
- Cable C from actuator → Lower drum

1) When the cruise control is not activated, depressing the accelerator pedal causes the carburetor to operate through the sequential movement of cable A, center drum and cable B.

2) When the cruise control is activated, operation of the actuator is transmitted through cable C, lower drum, center drum and cable B, thus activating the carburetor.

3) After the cruise control has been set, depressing the accelerator pedal activates cable A, upper drum, center drum and cable B, in that order, regardless of the operation of the actuator, thus activating the carburetor.

Adjustment

1) Loosen nuts. Adjust the play of the cable A so that the upper drum begins to operate when the cable's axial play is less than 2 mm (0.08 in). Tighten nuts.

2) Adjust the axial play of the cable B at the carburetor until the play is within 0 to 2 mm (0 to 0.08 in).

3) Adjust the axial play of the cable C until the lower drum begins to operate when the play is less than 2 mm (0.08 in). After the axial play is adjusted, tighten nuts connecting the cable to the actuator.

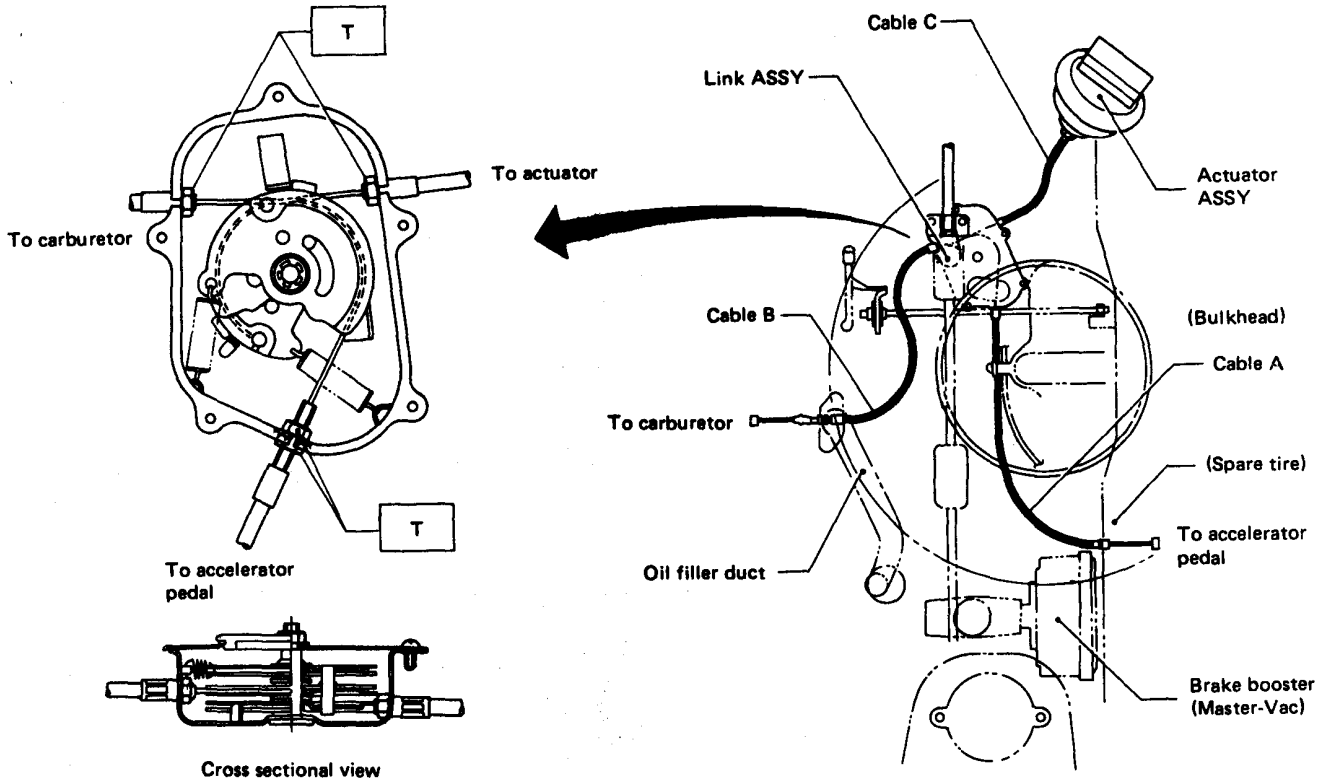

Tightening torque N·m (kg-m, ft-lb)
T: 2 - 6 (0.2 - 0.6, 1.4 - 4.3)

A25-821

Fig. 15-267

Downloaded from www.Manualslib.com manuals search engine

8. Remote Controlled RearView Mirror (Option)

The remote controlled rearview mirror switch consists of a left-right change-over select knob and a control lever. The switch is ready to function only when the ignition-starter switch is in "ACC" or "ON". To set the rearview mirror positions, move the select knob to the left for the left rearview mirror or to the right for the right one and move the control lever to left, right, up or down. Movement of the mirror is accomplished by the motor in the mirror. After releasing the control lever when the mirror is in the desired position, the motor stops automatically.

Replacement of the Switch

Remove the console box or radio box. Disconnect the 6-pin connector from the rear, remove the dress nut and replace the switch.

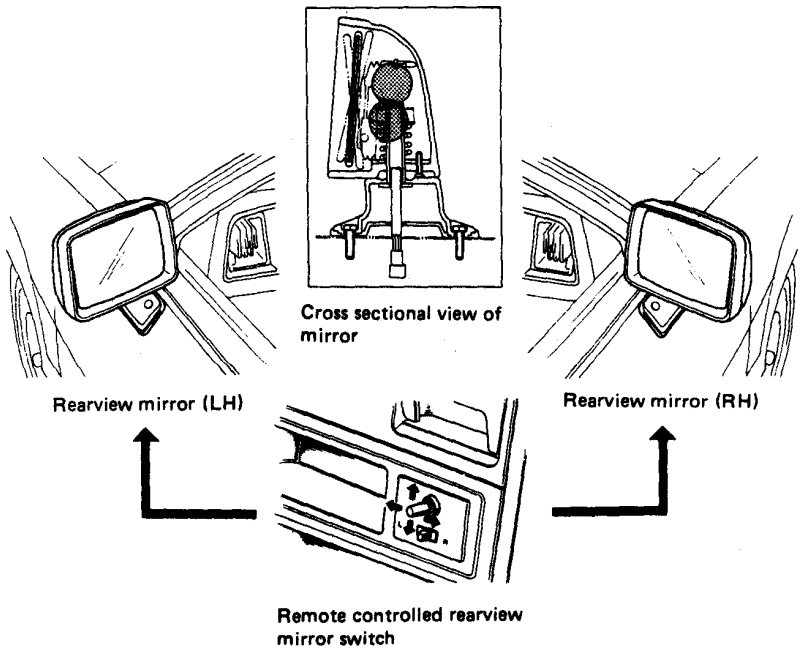

Fig. 15-268

A25-822

Replacement of the Electrical Wiring

The wiring is routed from the instrument panel wiring harness connector to the rearview mirror via the front door cord and the rearview mirror cord. The front door cord can be removed after detaching the grommet. The rearview mirror cord can be detached by removing the two retaining clips. To install, remove the door window glass, and make sure the glass and cord do not interfere with each other after installation.

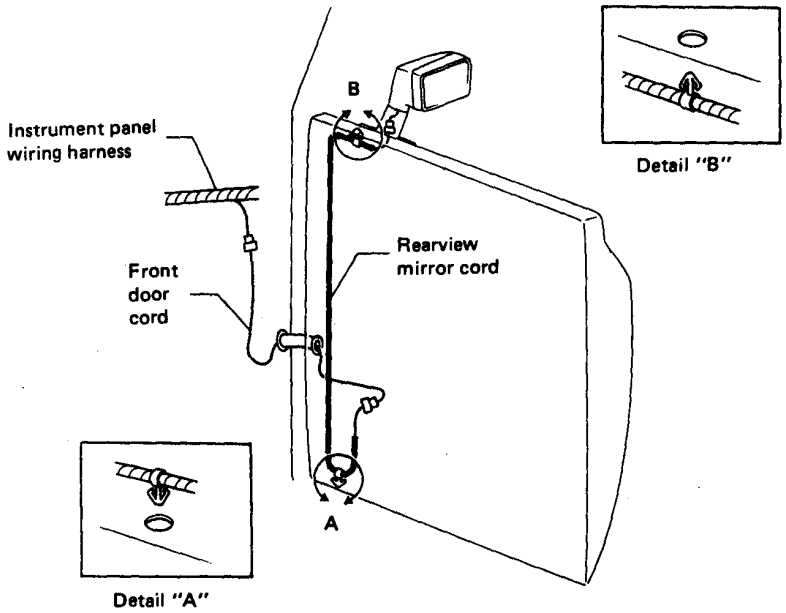

A25-823

Fig. 15-269

Downloaded from www.Manualslib.com manuals search engine

9. 4WD-AT Control System

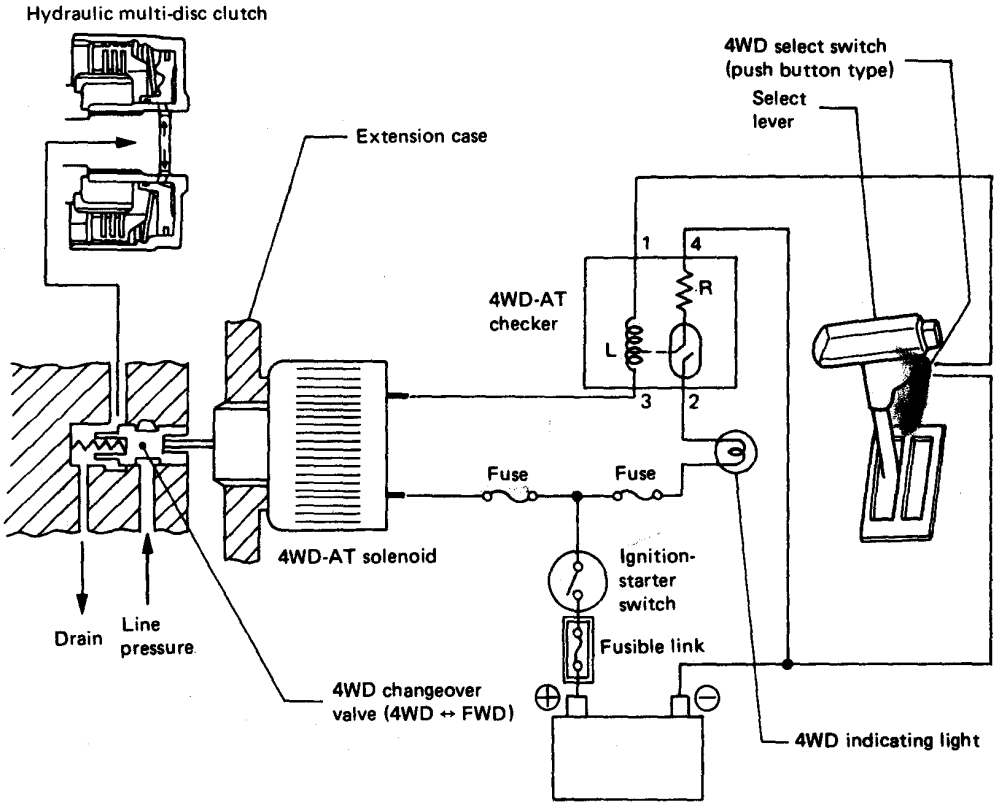

Fig. 15-270

A25-824

The 4WD-AT vehicle is equipped with an AT select lever and 4WD-AT switch (push button type) instead of the 4WD shift lever. By operating the 4WD-AT switch, the 4WD changeover valve of the automatic transmission is operated through the 4WD-AT solenoid mounted on the extension case.

When the 4WD-AT switch is turned on, the 4WD-AT checker unit detects the electric current flowing to the 4WD-AT solenoid, and illuminates the 4WD indicating light in the combination meter.

With the ignition-starter switch in "ON" position, if the 4WD indicating light fails to illuminate when the 4WD-AT switch is turned on, check the connector for disconnection, the 4WD-AT solenoid for broken coils, and if the 4WD-AT checker is in normal condition. The 4WD-AT checker is installed, together with the turn signal and hazard unit, under the instrument panel with a screw.

Downloaded from www.Manualslib.com manuals search engine

10. Electric Wiring for Air Conditioner

Electric wiring is, in advance, provided for all models to easy install the genuine air conditioner (HITACHI).

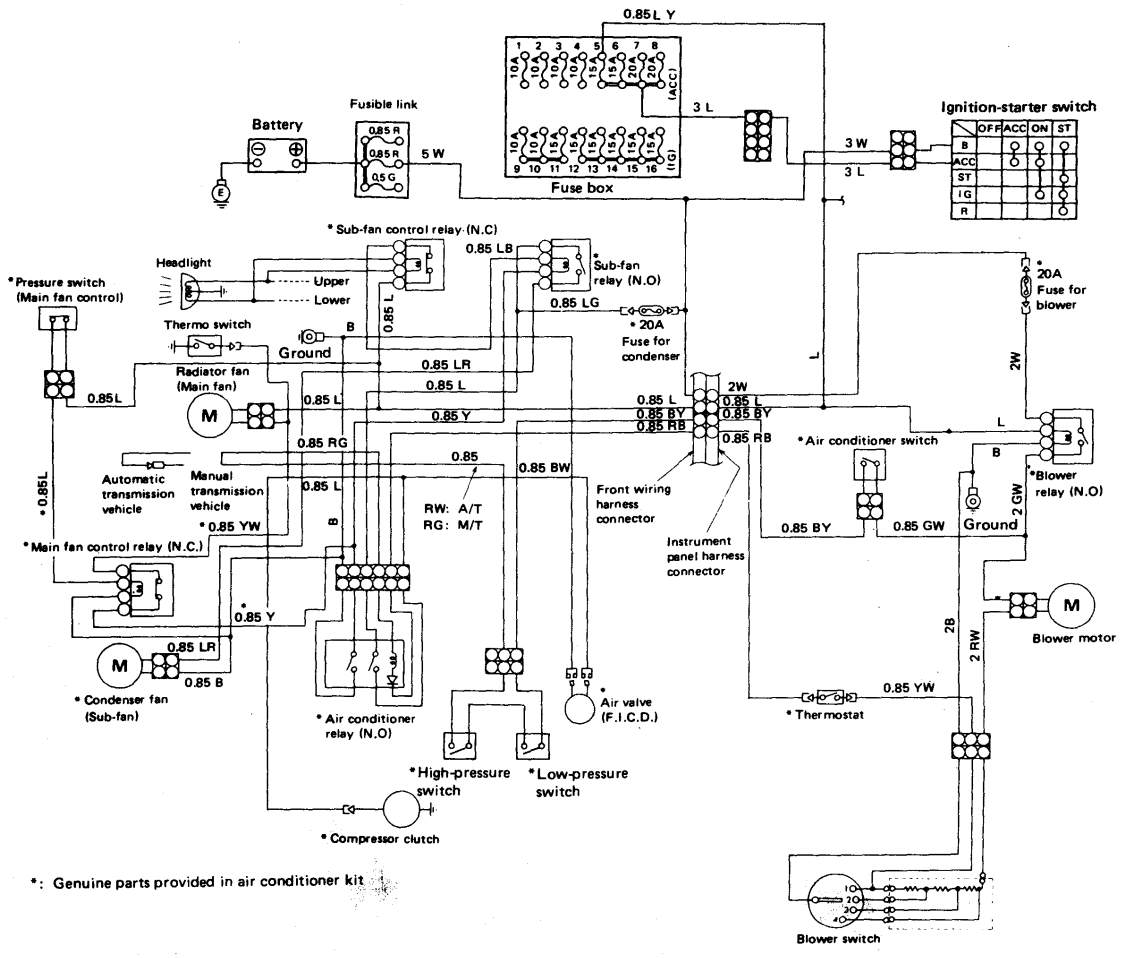

Fig. 15-271 Electric wiring for air conditioner

Downloaded from www.Manualslib.com manuals search engine

15-12. Electrical Wiring Harness

All models except BRAT

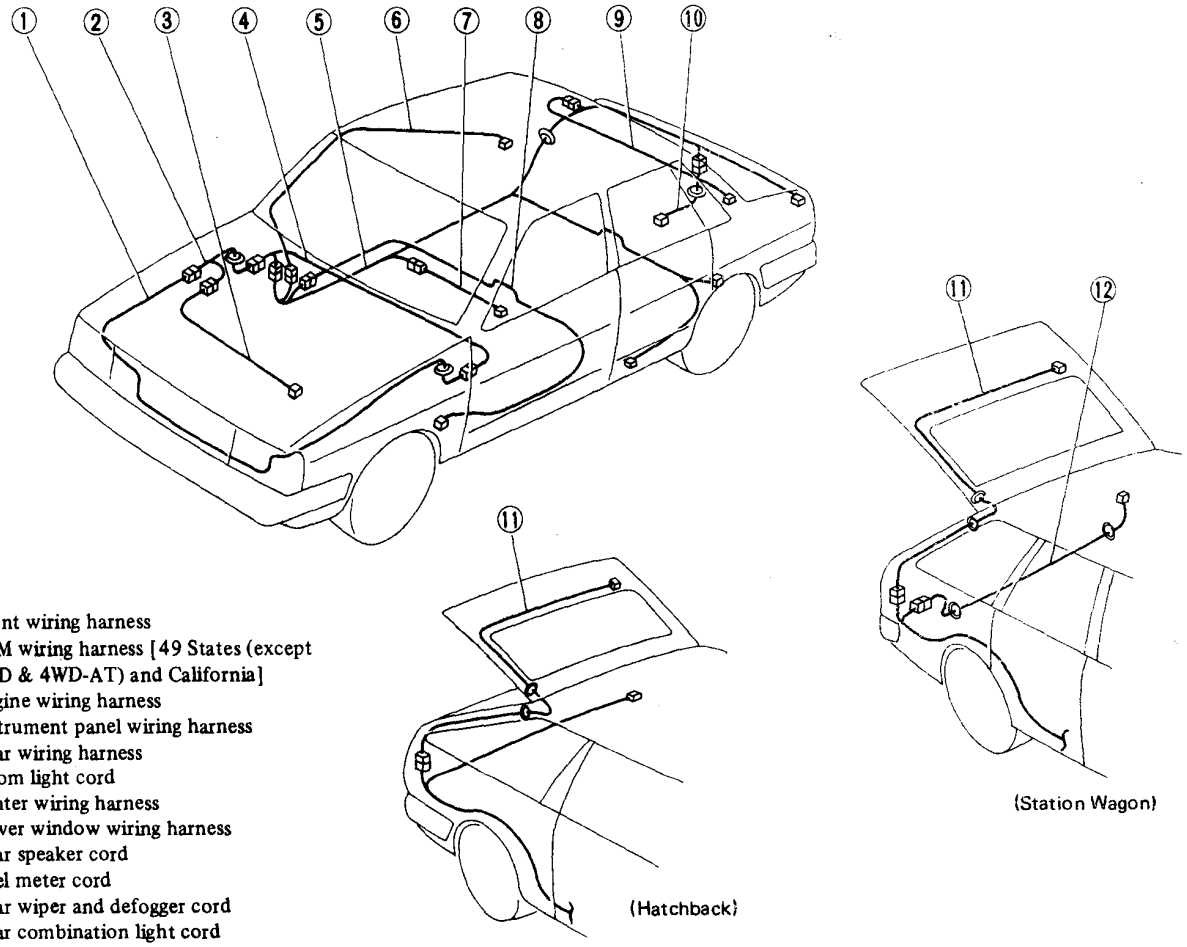

1 Front wiring harness
2 ECM wiring harness [49 States (except 4WD & 4WD-AT) and California]
3 Engine wiring harness
4 Instrument panel wiring harness
5 Rear wiring harness
6 Room light cord
7 Center wiring harness
8 Power window wiring harness
9 Rear speaker cord
10 Fuel meter cord
11 Rear wiper and defogger cord
12 Rear combination light cord

A25-701

BRAT

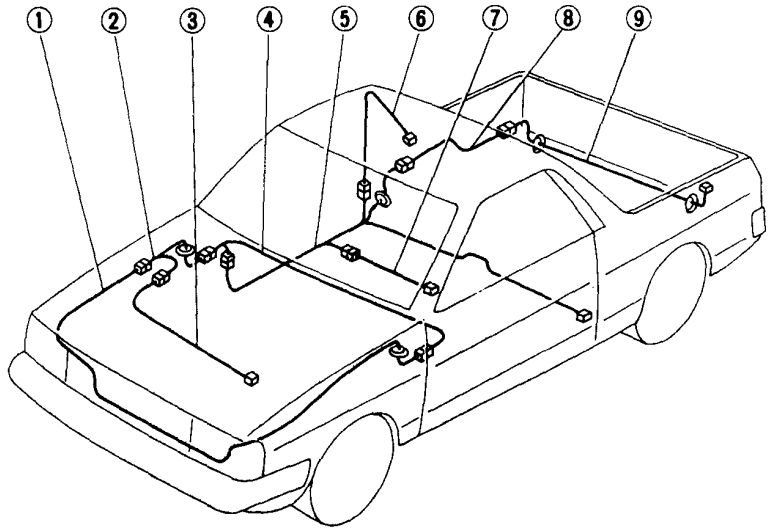

1 Front wiring harness
2 ECM wiring harness (California only)
3 Engine wiring harness
4 Instrument panel wiring harness
5 Rear wiring harness (A)
6 Room light cord
7 Center wiring harness
8 Rear wiring harness (B)
9 Rear combination light cord

A25-702

Downloaded from www.Manualslib.com manuals search engine

1. Front Wiring Harness

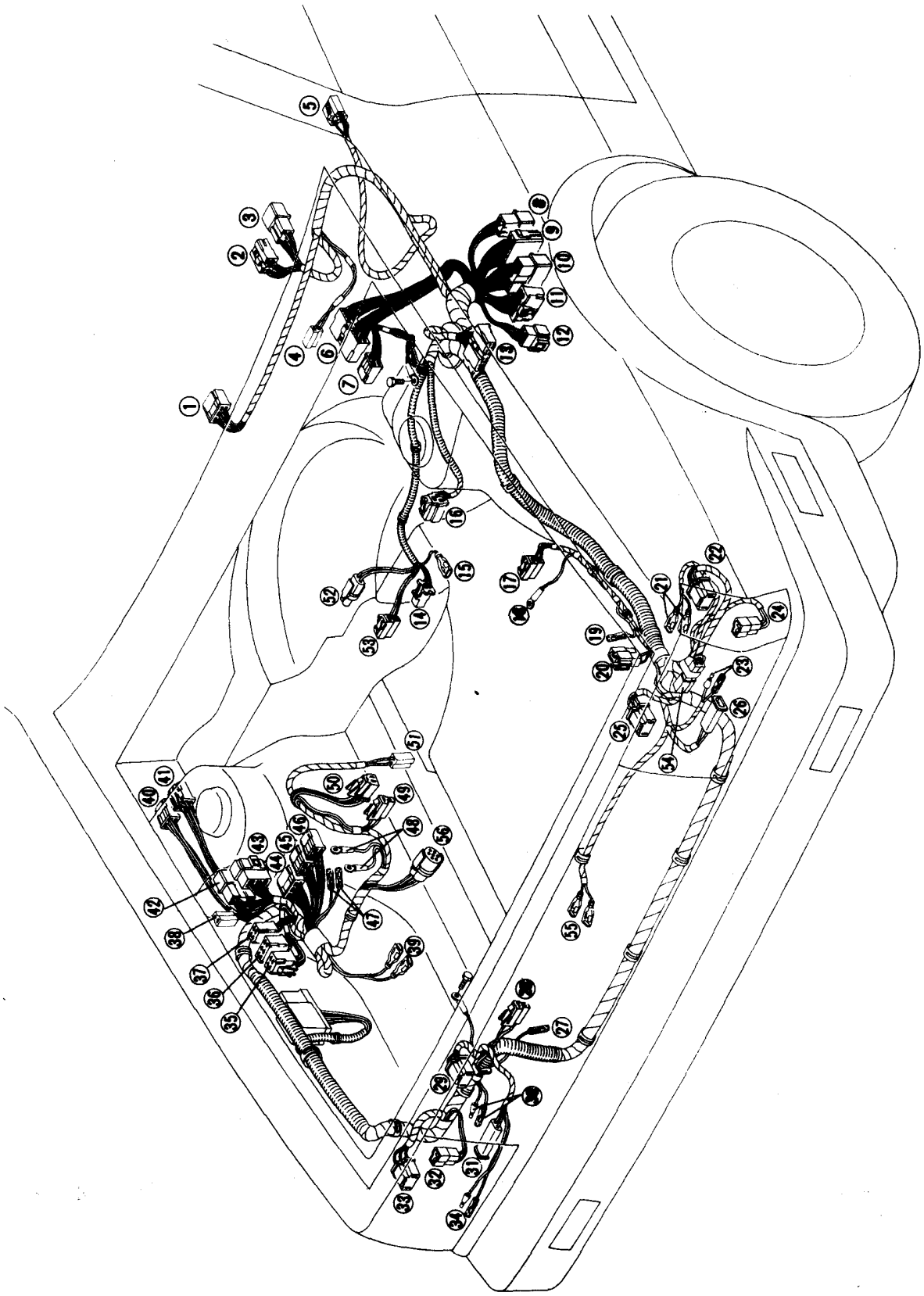

Fig. 15-272

A25-703

Downloaded from www.Manualslib.com manuals search engine

A25-704

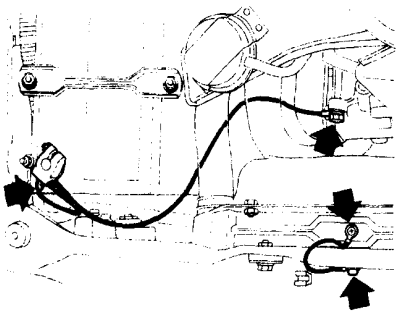

A25-705

Grounding point is shown by " ⬅ ".

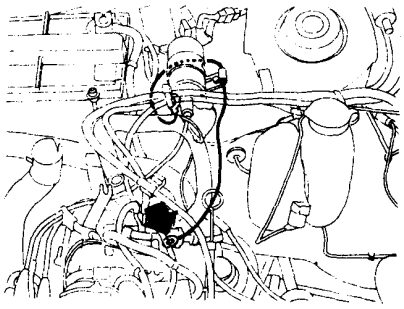

A25-706

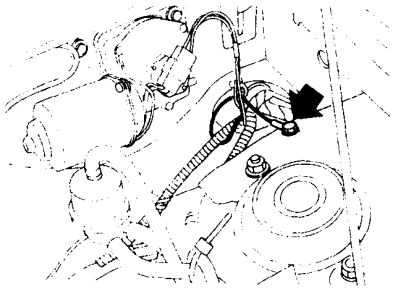

A25-723

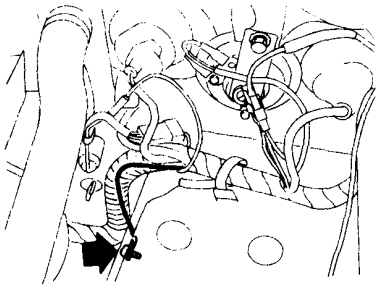

A25-724

Fig. 15-273

Front wiring harness

No.	Connector		Connecting to
	Pole	Appearance	
1	6	Pink	Ignition-starter switch
2	5	Green	Cruise control sub-switch
3	5	Green	Cruise control main switch
4	2		Kick-down switch
5	3		Turn signal & hazard unit
6	17		Cruise control unit
7	4		Wiper motor
8	5	Yellow	Instrument panel wiring harness
9	16	Black	Instrument panel wiring harness
10	13	Yellow	Instrument panel wiring harness
11	8		Instrument panel wiring harness
12	4	Blue	Instrument panel wiring harness (4WD-AT)
	2	Blue	Instrument panel wiring harness (AT)
13	13	Brown	Check terminals
14	2		Kick-down solenoid (AT & 4WD-AT)
	4		Back-up switch (MT)
15	1		Starter
16	3		Brake fluid level sensor
17	2		Alternator
18	1		IC regulator
19	1		Air-conditioner compressor
20	2		Condenser fan (sub-fan) motor
21	1 x 2		Horn (High tone)
22	3		Headlight (LH)
23	1 x 2		Side marker light (LH)
24	2	Black	Front combination light (LH)
25	3		Headlight (LH)
26	2		Front turn signal light (LH)
27	1		Thermo switch
28	2		Radiator fan (main fan) motor
29	3		Headlight (RH)
30	1 x 2		(To be connected)
31	2		Front turn signal light (RH)
32	2	Black	Front combination light (RH)
33	3		Headlight (RH)
34	1 x 2		Side marker light (RH)
35	4	Black	(Spare)
36	6	Pink	Check terminals
37	4	Pink	Check terminals
38	2	Pink	Check terminals
39	1 x 2		Air valve (F.I.C.D.)
40	4	Brown	Main fan control relay
41	4		Cruise control actuator
42	9	Green	ECM wiring harness
43	6	Green	ECM wiring harness
44	6		Air-conditioner relay
45	4	Black	Sub-fan relay
46	4		Sub-fan control relay
47	1 x 2		Fuse for air-conditioner
48	1 x 2		Ignition coil
49	2		Pressure switch (Main fan control)
50	3		Low pressure switch
51	2		Washer motor
52	2		4WD-AT solenoid
53	2		4WD-AT fluid temperature switch
54	2		Horn diode
55	1 x 2		Horn (Low tone)
56	7		Engine wiring harness

The connector is white if there is no indication in the connector appearance column.

Downloaded from www.Manualslib.com manuals search engine

2. Engine and ECM Wiring Harness

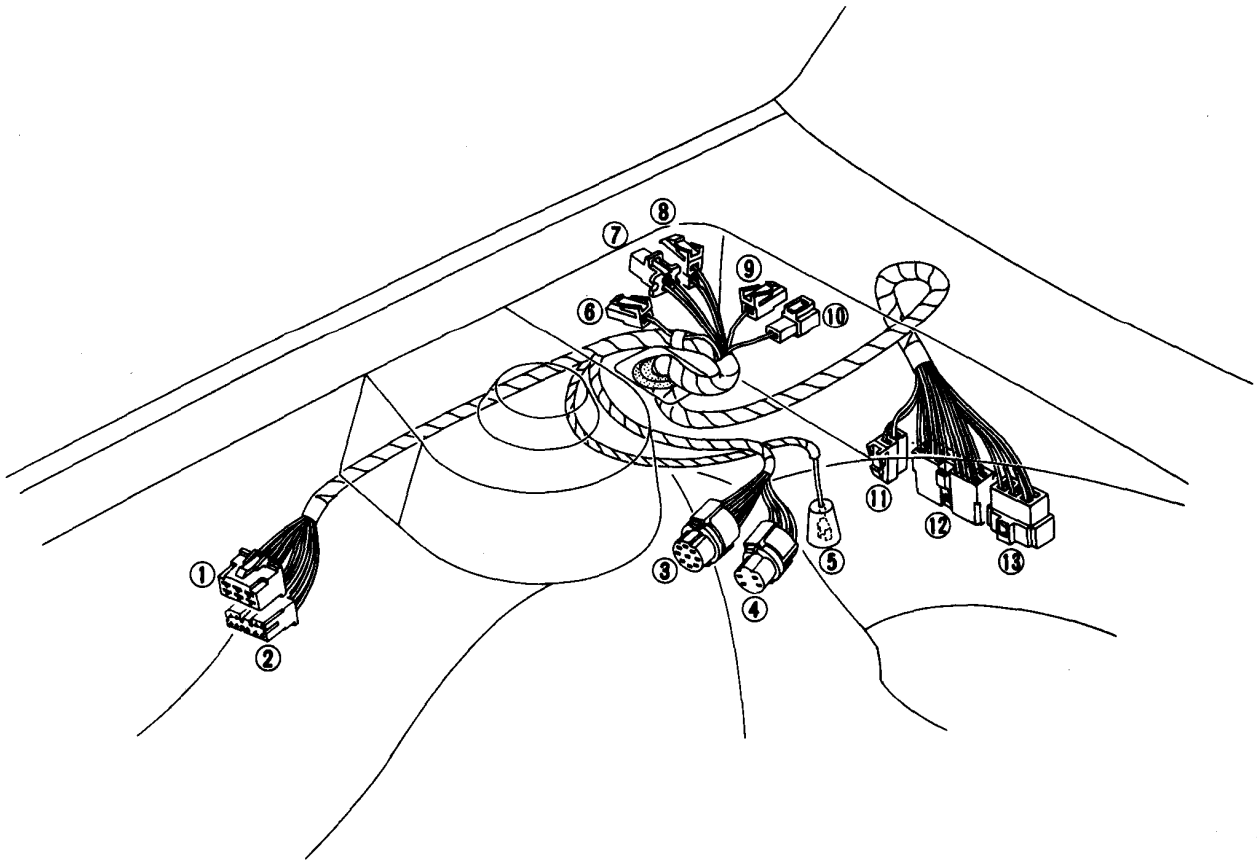

Fig. 15-274

A25-707

No.	Connector		Connecting to
	Pole	Appearance	
1	6	Green	Front wiring harness
2	9	Green	
3	9		Engine wiring harness
4	4		
5			O_2 sensor
6	1	Black	High altitude switch
7	2		Vacuum switch (II)
8	2		Vacuum switch (I)
9	1	Pink	(Spare)
10	1	Pink	
11	2	Green	Rear wiring harness
12	17	Green	Instrument panel wiring harness
13	6	Green	

Downloaded from www.Manualslib.com manuals search engine

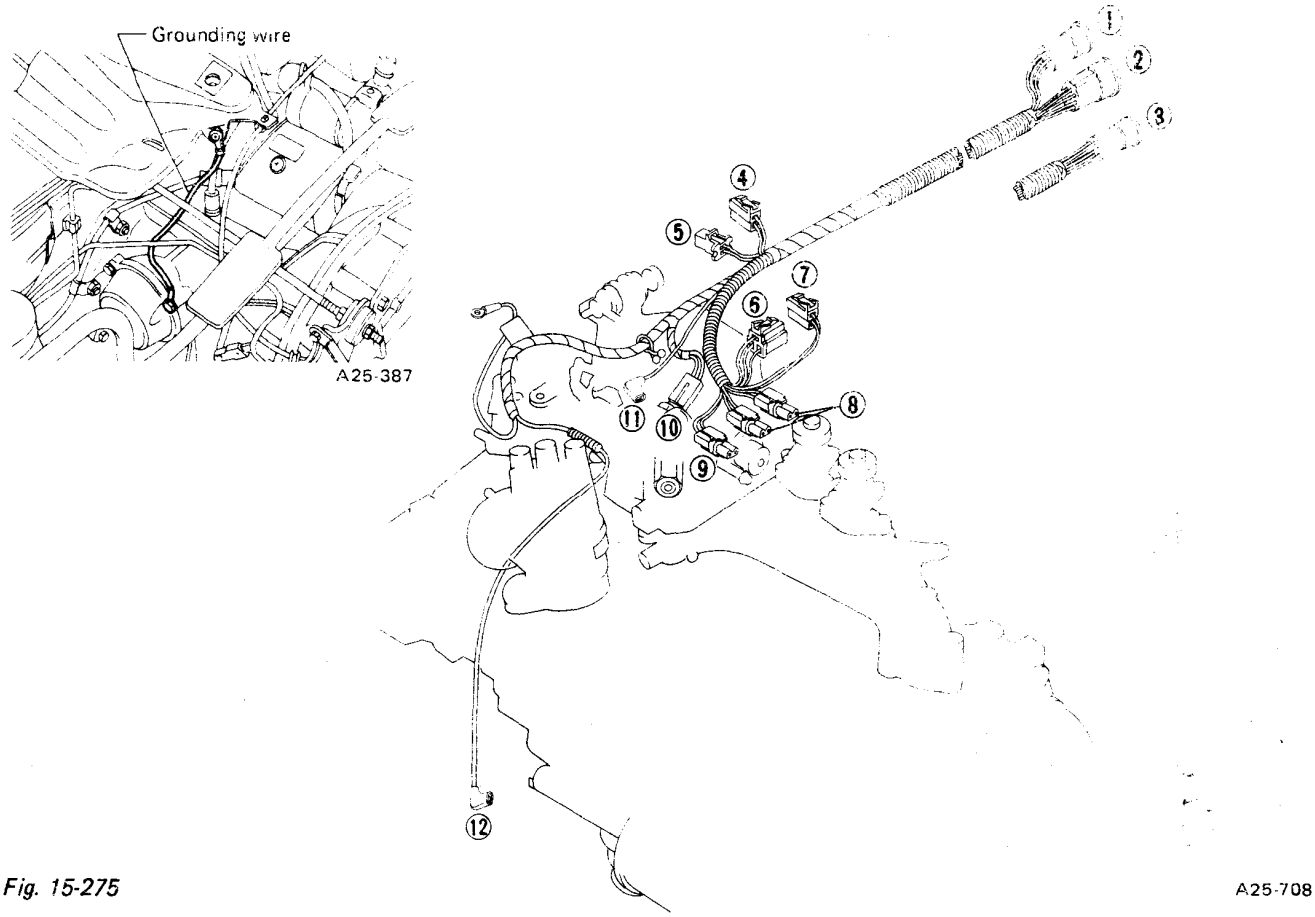

Fig. 15-275

A25-708

No.	Connector		Connecting to	Application (See the following table.)
	Pole	Appearance		
1	4		} ECM wiring harness	A, B
2	9			
3	7		Front wiring harness	C
4	2		Solenoid valve (III)	A
5	2		Solenoid valve (I)	A, B
6	3		Automatic choke	A, B, C
7	2		Solenoid valve (II)	A (49 States only), B
8	2 x 2		Duty solenoid	A
9	2		Duty solenoid	B
10	2		Thermo sensor	A, B
11	1		Thermo sensor	C
12	1		Oil pressure switch or unit	A, B, C

Application table		U.S.A.		Canada
		49 States	California	
Other than 4WD & 4WD-AT	With HITACHI carburetor	A	A	C
	With Carter carburetor	B		
4WD & 4WD-AT		C		

Downloaded from www.Manualslib.com manuals search engine

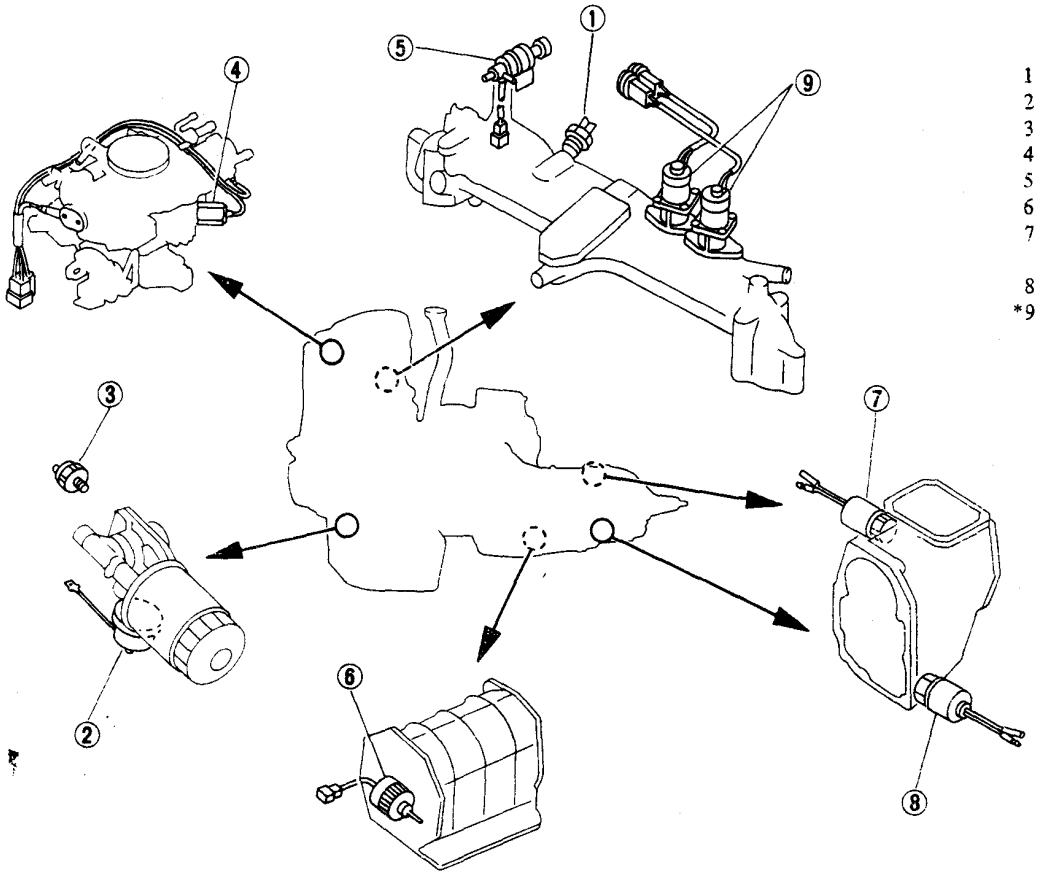

1 Thermo sensor
2 Oil pressure unit
3 Oil pressure switch
4 Anti-dieseling switch
5 Solenoid valve (I)
6 Kick-down solenoid (AT)
7 4WD switch or LO switch (Dual-range only)
8 Back-up light switch
*9 Duty solenoid valve

A25-709

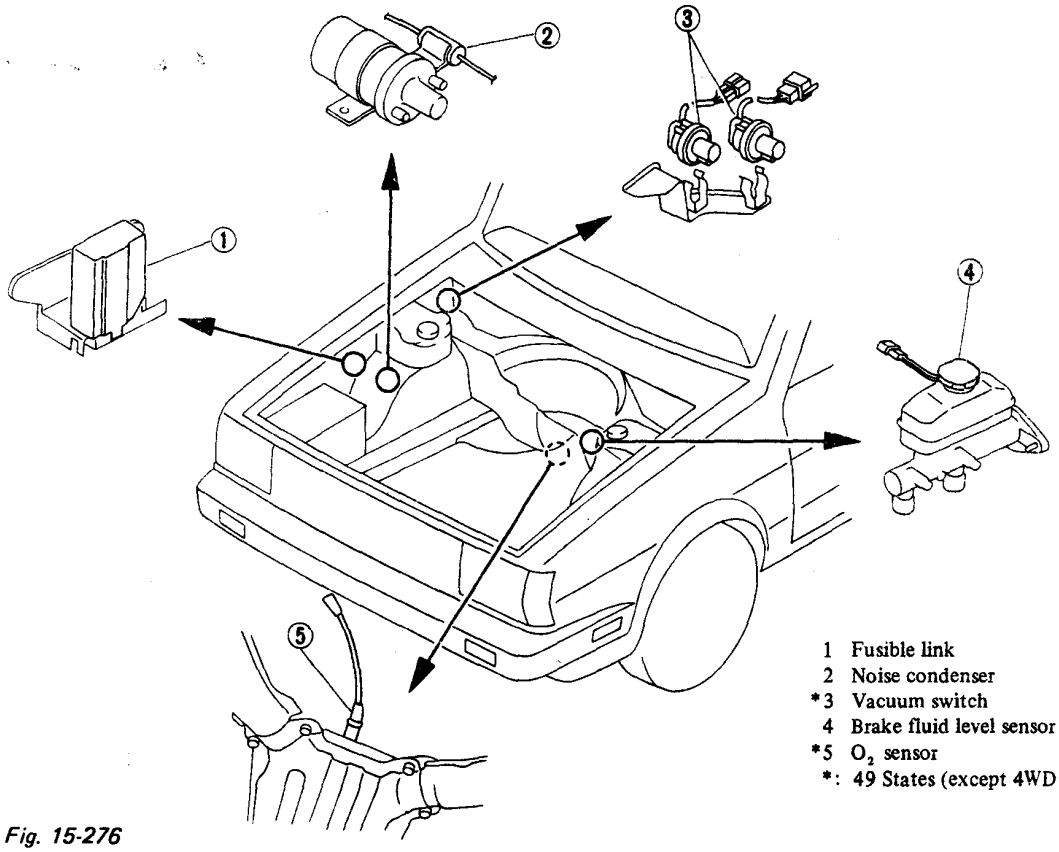

1 Fusible link
2 Noise condenser
*3 Vacuum switch
4 Brake fluid level sensor
*5 O_2 sensor
*: 49 States (except 4WD & 4WD-AT) and California

Fig. 15-276

A25-710

Downloaded from www.Manualslib.com manuals search engine

3. Instrument Panel Wiring Harness

- STD & DL models

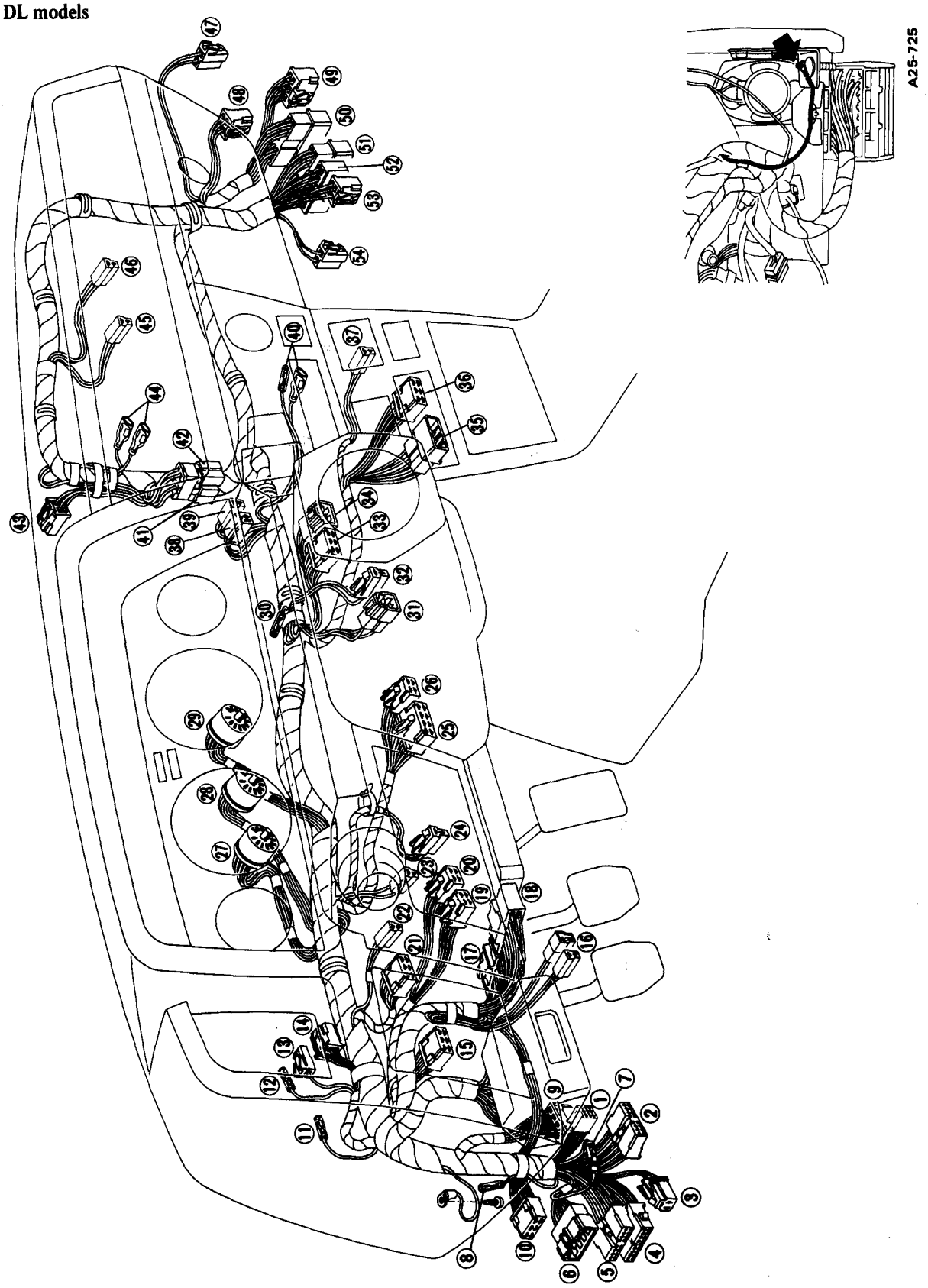

Fig. 15-277

A25-711

Downloaded from www.Manualslib.com manuals search engine

No.	Connector		Connecting to
	Pole	Appearance	
1*1	9	Pink	Check terminals
2*1	11	Brown	
3	3	Blue	Remote controlled rearview mirror (LH)
4	16	Black	Front wiring harness
5	13	Yellow	
6	8		
7	1 x 2		Clock
8	1		(Spare)
9	8		Timer
10	6		Fuel pump control unit
11	1		Fuse (for A/C)
12	1		
13	1		(Spare)
14	4		Relay (for A/C)
15	6		Intermittent wiper unit
16*1	2 x 2	Green	Check terminals
17*1	20	Black	ECM
18*1	16	Black	
19	4	Black	Lighting relay
20	4	Green	Kick-down relay
21	6		Lighting switch
22	2	Brown	Illumination light
23	2	Green	Key warning switch
24	2		Stop light switch
25	8		Combination switch
26	4	Brown	
27	12	Brown	Combination meter
28	12	Black	
29	12		
30	1		(Spare)
31	3		Blower motor switch
32	2		Air-conditioner switch
33	6	Blue	Windshield wiper switch
34	4	Blue	Rear wiper switch
35	7		Rearview mirror switch
36	6	Brown	Radio
37	2		Illumination light (for ash tray)
38	3	Black	Rear defogger switch
39	2		Illumination light (for control panel)
40	1 x 2		Cigarette lighter
41	2		Diode (for chime)
42	2		Diode (for parking brake warning light)
43*1	4	Black	(Spare)
44	1 x 1		Thermo unit (for A/C)
45	2		Speaker
46	2	Pink	Chime
47*2	2	Green	Rear wiring harness
48	4		
49*1	6	Green	ECM wiring harness
50*1	17	Green	
51	17	Blue	Rear wiring harness
52	10	Blue	
53	4	Black	
54	2		Blower motor

*1: 49 States (except 4WD & 4WD-AT) and California
*2: 49 States 4WD & 4WD-AT and Canada

Downloaded from www.Manualslib.com manuals search engine

- GL model

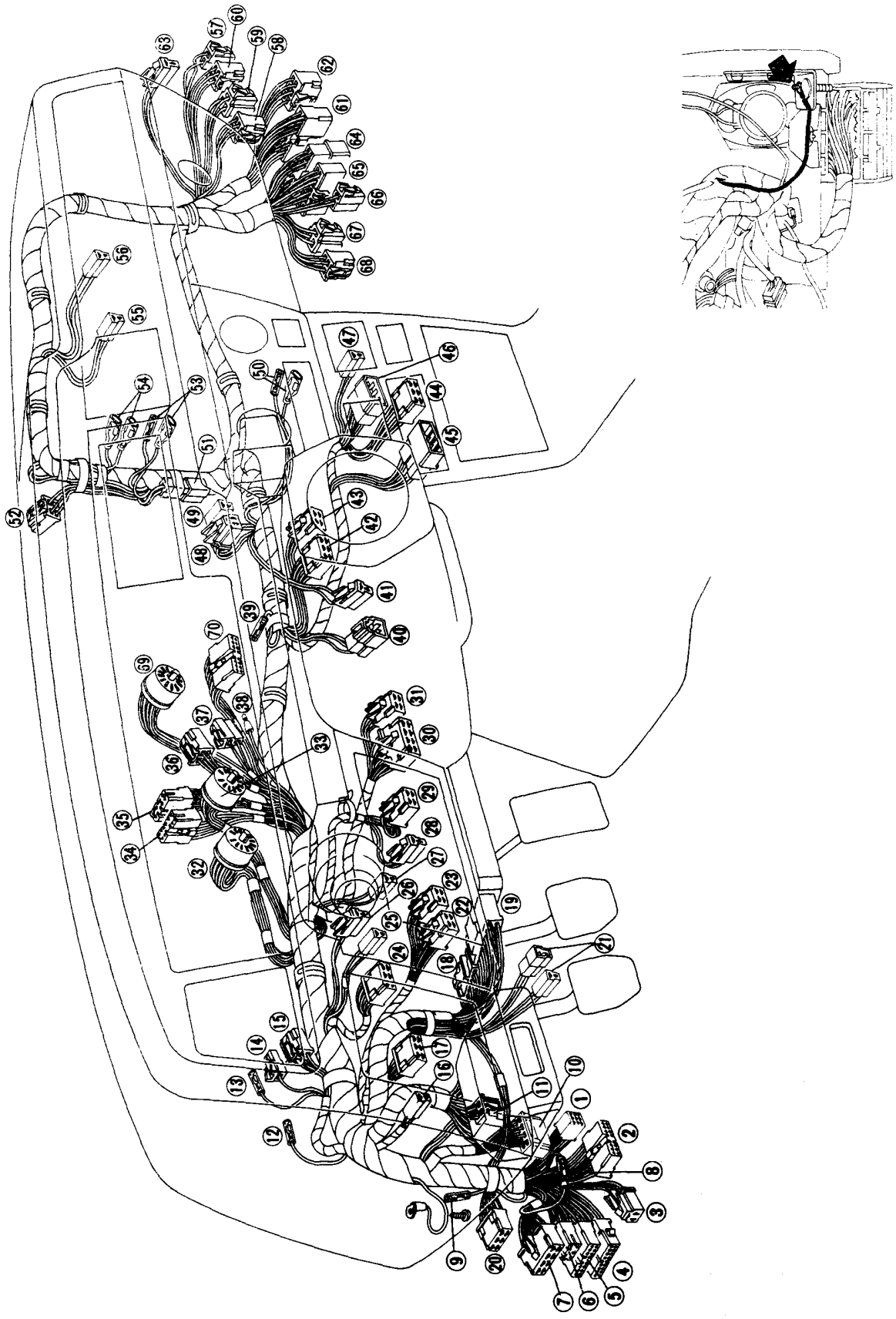

Fig. 15-278

A25-713

Downloaded from www.Manualslib.com manuals search engine

No.	Connector		Connecting to
	Pole	Appearance	
1*1	9	Pink	Check terminals
2*2	11	Brown	
3	3	Blue	Remote controlled rearview mirror (LH)
4	16	Black	Front wiring harness
5	13	Yellow	
6*3	5		
7*1	8	Yellow	
	10		
8	1 x 2		Clock
9	1		(Spare)
10	8		Timer
11	4	Blue	Front wiring harness (4WD-AT)
	2	Blue	(AT)
12	1		Fuse (for A/C)
13	1		
14	1		(Spare)
15	4		Relay (for A/C)
16	2		Speaker
17	6		Intermittent wiper unit
18*1	20	Black	ECM
19*1	16	Black	
20	6	Black	Fuel pump control unit
21	2 x 2	Green	Check terminals
22	4	Black	Lighting relay
23	4	Green	Kick-down relay
24	6		Lighting switch
25	2	Brown	Illumination light (for switches)
26	2		Illumination light
27	2	Green	Key warning switch
28	2	Brown	Clutch switch
29	4		Stop light switch
30	8		Combination switch
31	4	Brown	
32	12	Black	Combination meter
33	12		
34*4	9		
35*4	7		
36*4	4		Clock
37*4	2	Black	Car speed sensor
38*4	1		Illumination light (for clock)
39	1		(Spare)
40	3		Blower motor switch
41	2		Air-conditioner switch
42	6	Blue	Windshield wiper switch

No.	Connector		Connecting to
	Pole	Appearance	
43	4	Blue	Rear wiper switch
44	6	Brown	Radio
45	7		Rearview mirror switch
46	6		Speaker balancer
47	2		Illumination light (for ash tray)
48	3	Black	Rear defogger switch
49	2		Illumination light
50	1 x 2		Cigarette lighter
51	2		Diode (for chime)
52*1	4	Black	(Spare)
53	1 x 2		Glove box switch and light
54	1 x 2		Thermo unit (for A/C)
55	2		Speaker
56	2		Chime
57*2	2	Green	Rear wiring harness
58	4		
59	3	Blue	Remote controlled rearview mirror (RH)
60	4	Blue	Center wiring harness (4WD-AT)
	2	Blue	(AT)
61*1	17	Green	ECM wiring harness
62*1	6	Green	
63	2		Speaker
64	17	Blue	Rear wiring harness
65	10	Blue	
66	2		Blower motor
67	3		Rear wiring harness
68	4	Black	
69*3	12		Combination meter
70*3	13	Green	

*1: 49 States (except 4WD & 4WD-AT) and California
*2: 49 States 4WD & 4WD-AT and Canada
*3: Digital type only
*4: Other than digital type

Downloaded from www.Manualslib.com manuals search engine

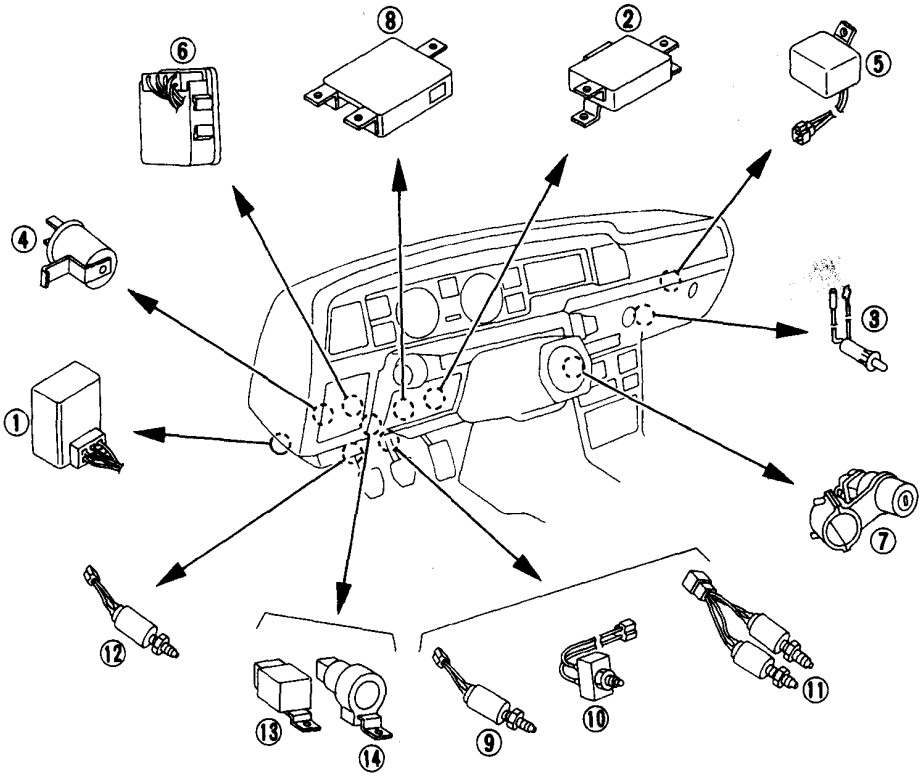

1 Fuel pump control unit
2 Cruise control unit
3 Glove box switch
4 Intermittent wiper unit
5 Chime
6 Timer
7 Ignition-starter switch and key warning switch
8 ECM [49 States (except 4WD & 4WD-AT) and California]
9 Stop light switch
10 Kick-down switch (AT)
11 Stop & brake switch (for cruise control)
12 Clutch switch (for cruise control)
13 Turn signal and hazard unit
14 Kick-down relay (AT)

A25-714

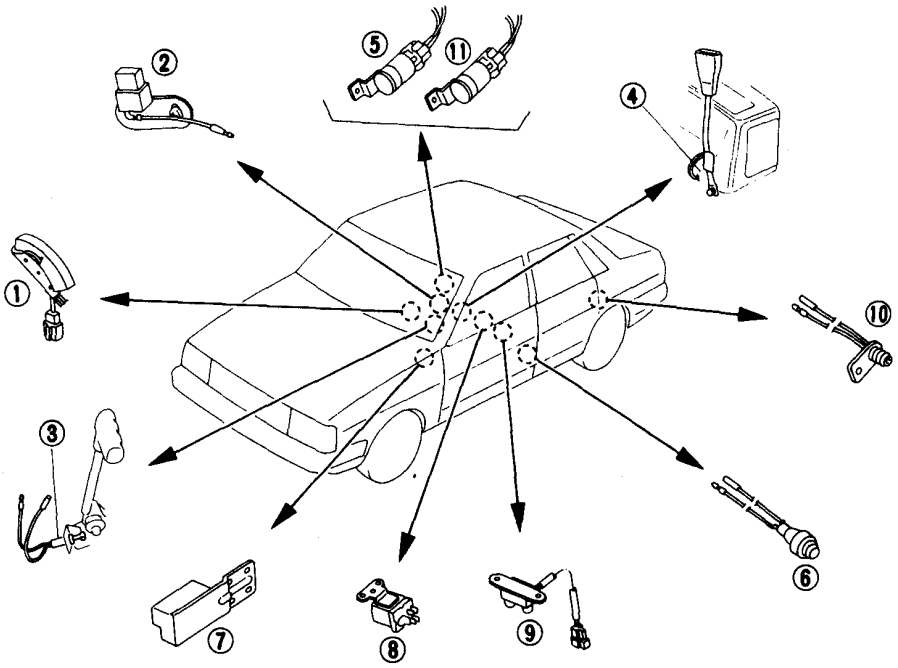

1 Inhibitor switch
2 Parking brake switch
3 4WD switch (Dual-range only)
4 Seat belt switch
5 Ignition relay
6 Door switch (Front)
7 Power window control unit
8 Power window relay
9 Power window breaker
10 Door switch (Rear)
11 Automatic choke relay

A25-715

Fig. 15-279

Downloaded from www.Manualslib.com manuals search engine

4. Rear Wiring Harness

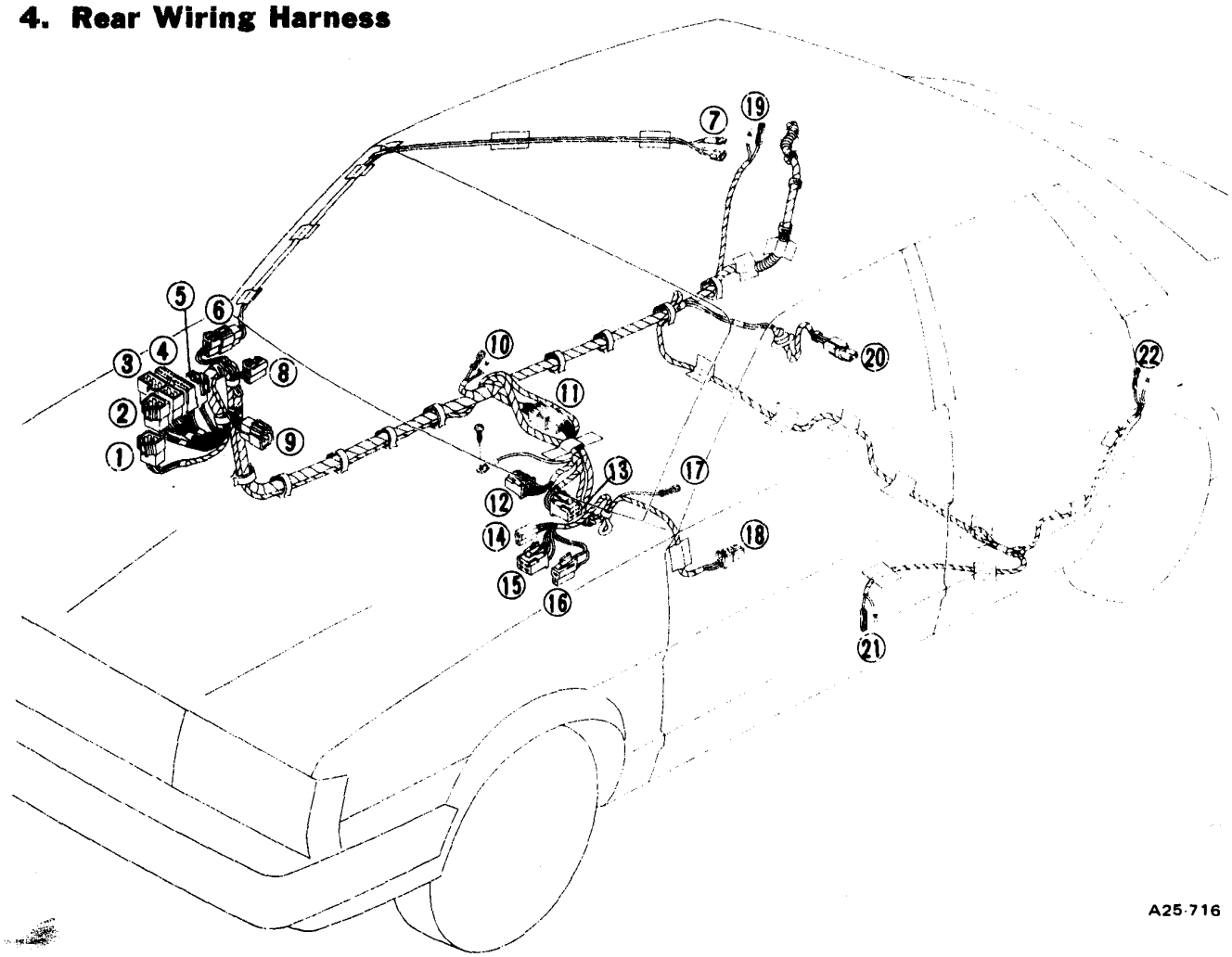

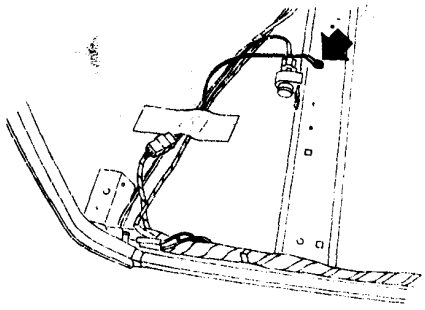

Fig. 15-280

No.	Connector		Connecting to
	Pole	Appearance	
1	4	Blue	(4WD-AT only)
	2	Blue	(Others)
2	4	Black	Instrument panel wiring harness
3	10	Blue	
4	17	Blue	
5	2	Green	ECM wiring harness
6	2		Room light cord
7	1 x 2		Room light
8	2	Pink	Power window wiring
9	3		Front speaker (RH)
10	1 x 2		Front door switch (RH)
11	4		Center wiring harness
12	4		Ignition relay
13	4		Automatic choke relay
14	2		Indicator light (AT only)
15	4		Inhibitor switch (AT only)
16	2		4WD-AT switch (4WD-AT only)
17	1		Parking brake switch
18	2		Seat belt switch
19	1 x 2		Rear door switch (RH)
20	2		Fuel pump
21	1 x 2		Front door switch (LH)
22	1 x 2		Rear door switch (LH)

Downloaded from www.Manualslib.com manuals search engine

Downloaded from www.Manualslib.com manuals search engine

Downloaded from www.Manualslib.com manuals search engine

- Station Wagon

A25-720

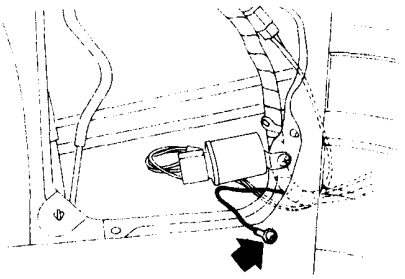

A25-729

Fig. 15-283

No.	Connector		Connecting to
	Pole	Appearance	
1	6	Pink	Stop light checker
2	6		Combination light (RH)
3	2		Rear combination light cord
4	6		
5	1 x 2		Fuel meter unit
6	2		Rear washer motor
7	6		Combination light (LH)
8	6		Rear wiper and defogger cord
9	1		
10	4		Rear wiper motor
11	1		Rear defogger
12	2		License light (RH)
13	1		Rear gate switch
14	2		License light (LH)
15	1		Rear defogger (grounding)

Downloaded from www.Manualslib.com manuals search engine

- **BRAT**

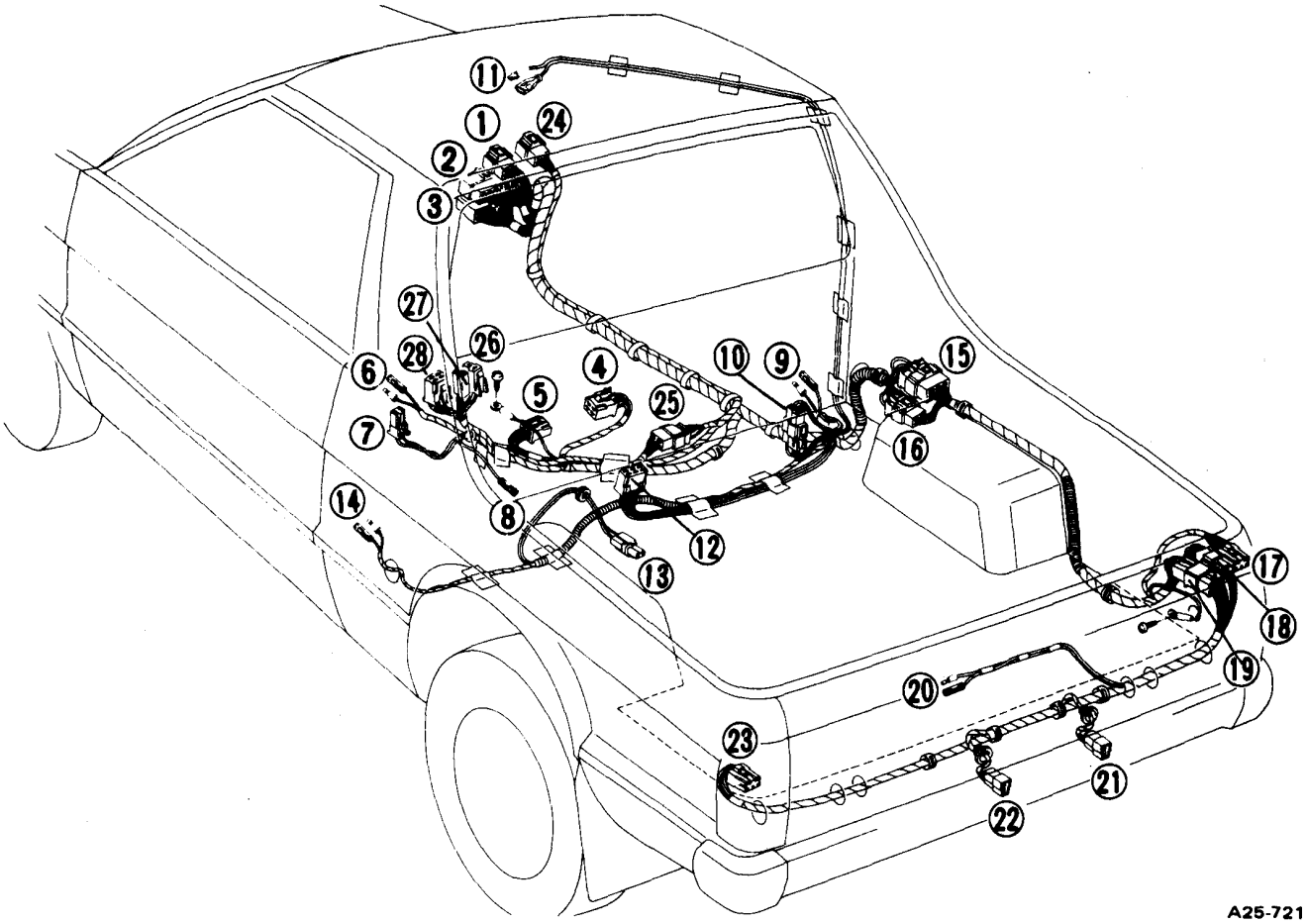

A25-721

No.	Connector		Connecting to
	Pole	Appearance	
1	4	Black	Instrument panel wiring harness
2	10	Blue	
3	17	Blue	
4	4		Automatic choke relay
5	4		Ignition relay
6	1 x 2		4WD switch
7	2		Seat belt switch
8	1		Parking brake switch
9	1 x 2		Door switch (RH)
10	2		Room light cord
11	1 x 2		Room light
12	6		Stop light checker
13	2		Fuel pump
14	1 x 2		Door switch (LH)
15	6		Rear wiring harness (B)
16	4		
17	5		Combination light (RH)
18	3	Blue	Rear combination light cord
19	5	Yellow	
20	1 x 2		Fuel meter unit
21	2		License light (RH)
22	2		License light (LH)
23	5		Combination light (LH)
24	4	Blue	Instrument panel wiring harness
25	4		Center wiring harness
26	2		4WD-AT switch
27	2		Indicator light
28	4		Inhibitor switch

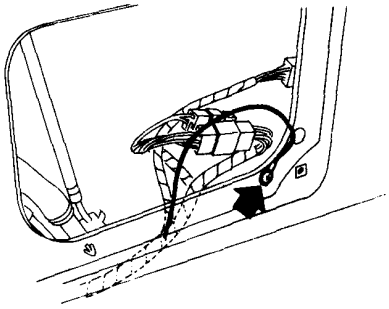

A25-730

Fig. 15-284

Downloaded from www.Manualslib.com manuals search engine

Downloaded from www.Manualslib.com manuals search engine

Downloaded from www.Manualslib.com manuals search engine

15-13. Wiring Diagram and Troubleshooting

1. Engine Electrical System

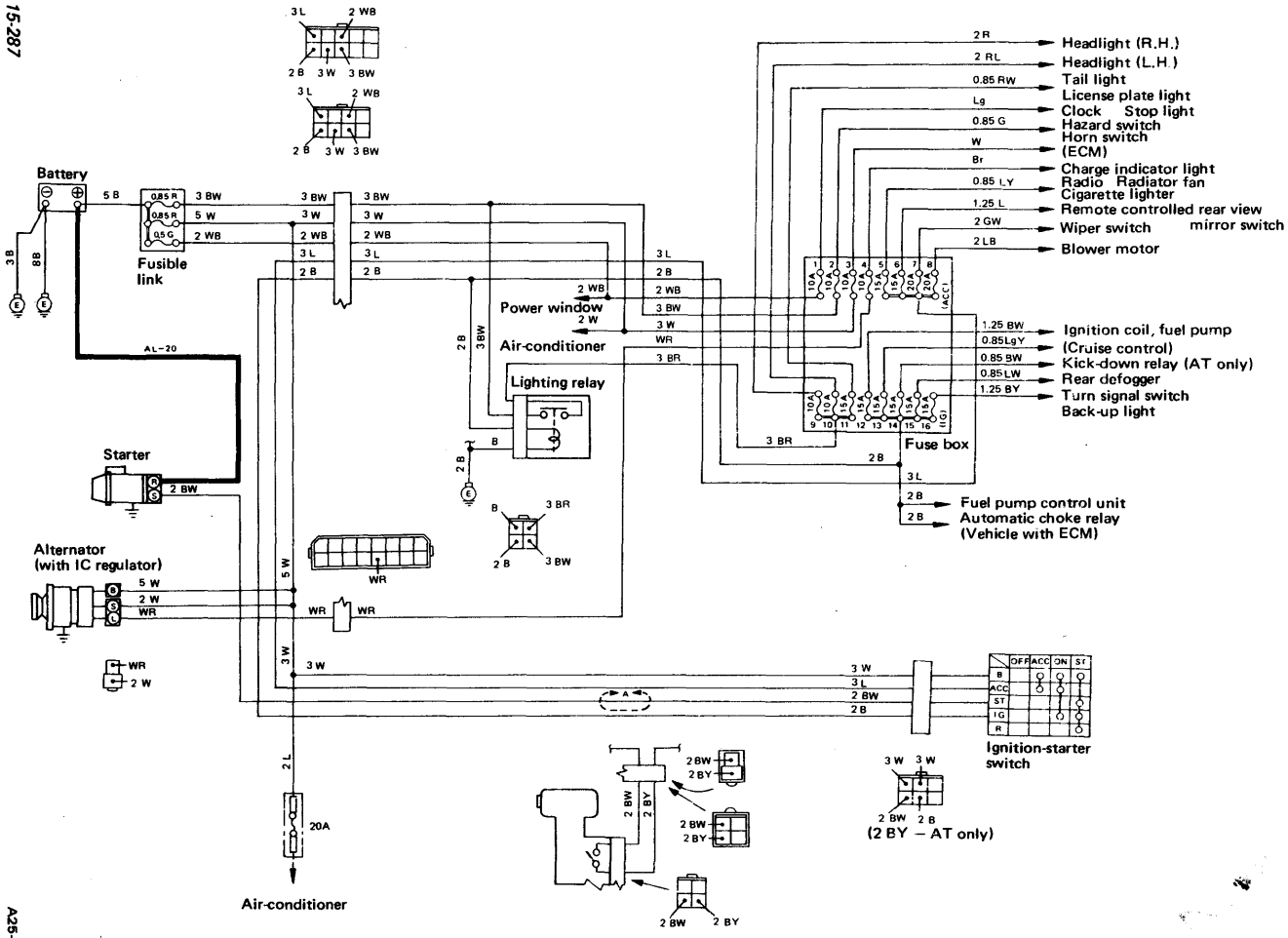

Fig. 15-287

A25-732

Downloaded from www.Manualslib.com manuals search engine

1) Starting System

Starter does not rotate with no sound of magnetic switch operation

- Inspect battery for specific gravity and electrolyte level. → Arrange specific gravity and electrolyte level to the specifications, or replace as necessary.
- Inspect starter switch and circuit for the following points.
  - Blown fusible link or defective connection
  - Grounded wiring or poor connection
  - Defective contact of starter switch
  → Repair or replace.
- Inspect magnetic switch for broken or grounded wiring in pull-in coil. → Replace.
- Inspect magnetic switch for defective sliding of plunger. → Lubricate or repair.

Starter does not rotate, but sound of magnetic switch operation can be heard.

- Inspect battery for specific gravity and electrolyte level. → Arrange them to the specifications, or replace as necessary.
- Inspect wirings of starting circuit for poor connection. → Repair.
- Inspect magnetic switch for defective point contact. → Repair or replace.
- Inspect starter for the following points.
  - Grounded armature coil and/or field coil
  - Defective brush contact pressure (Worn brush or defective spring)
  - Contaminated commutator and high mica
  - Seized bushing
  → Repair or replace.

Downloaded from www.Manualslib.com manuals search engine

Downloaded from www.Manualslib.com manuals search engine

Downloaded from www.Manualslib.com manuals search engine

Downloaded from www.Manualslib.com manuals search engine

3) Ignition System

A. Secondary circuit

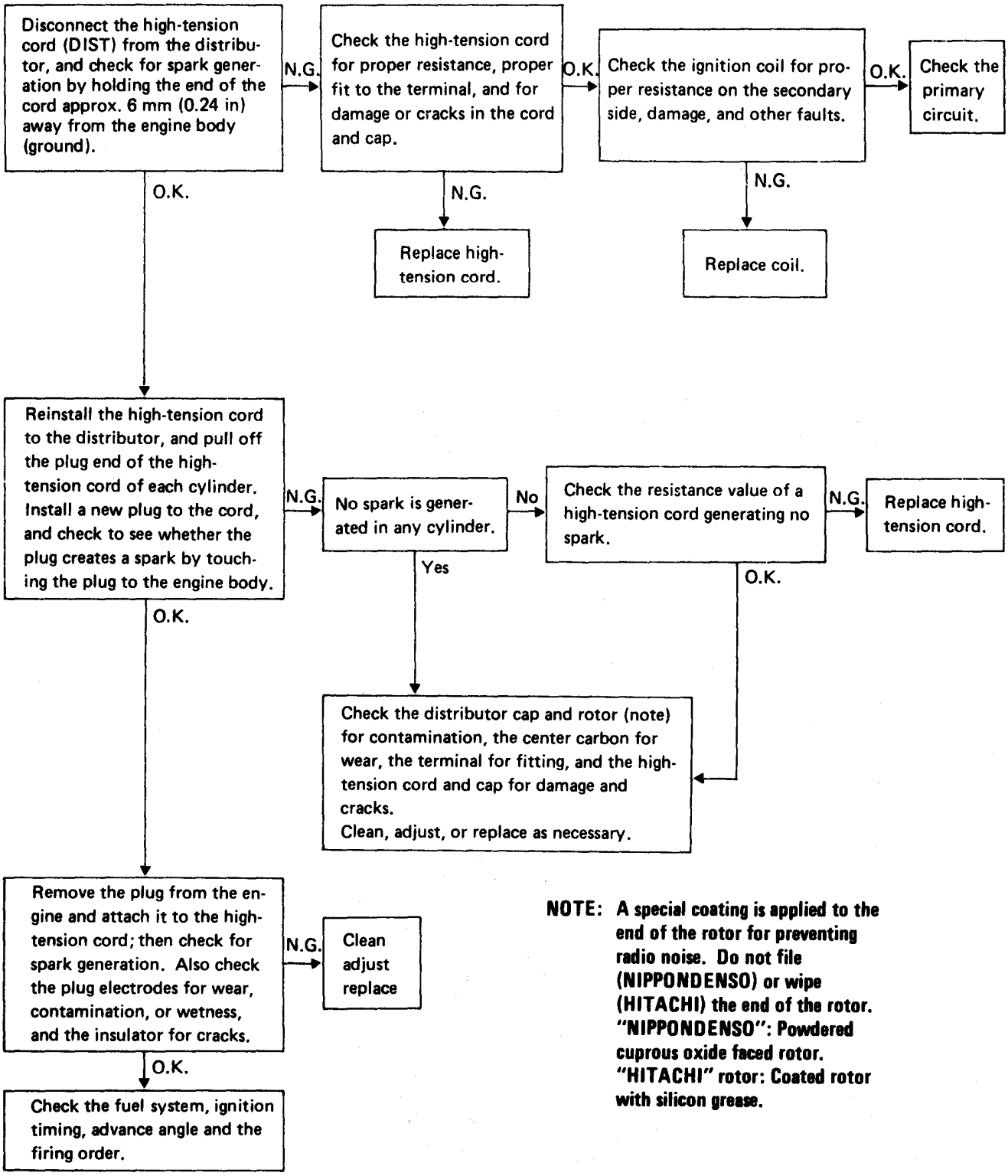

NOTE: A special coating is applied to the end of the rotor for preventing radio noise. Do not file (NIPPONDENSO) or wipe (HITACHI) the end of the rotor. "NIPPONDENSO": Powdered cuprous oxide faced rotor. "HITACHI" rotor: Coated rotor with silicon grease.

Downloaded from www.Manualslib.com manuals search engine

Downloaded from www.Manualslib.com manuals search engine

2. Combination Meter

A. CONVENTIONAL TYPE

- STD and DL models

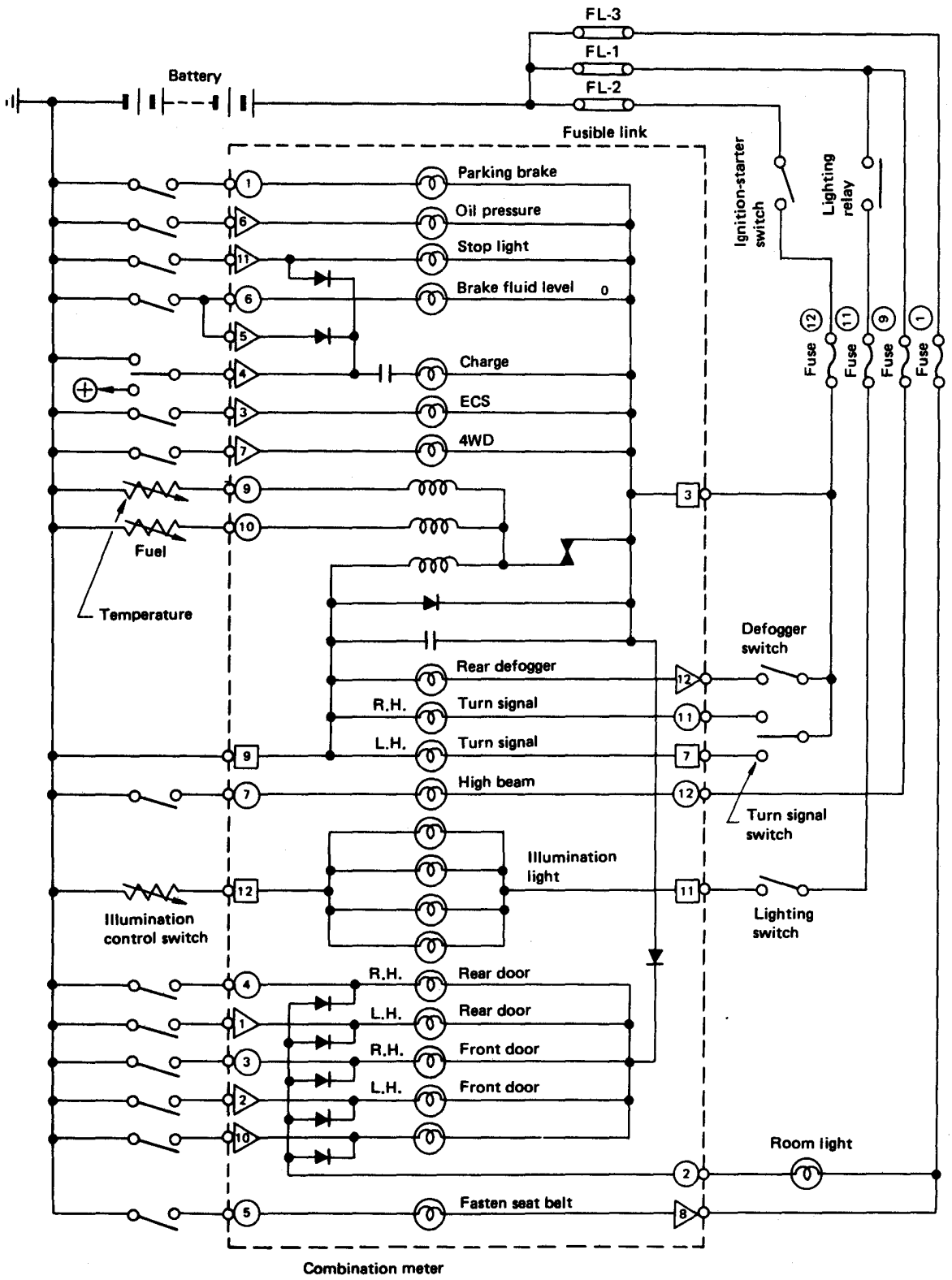

Fig. 15-288

A25-733

Downloaded from www.Manualslib.com manuals search engine

Downloaded from www.Manualslib.com manuals search engine

- **GL model**

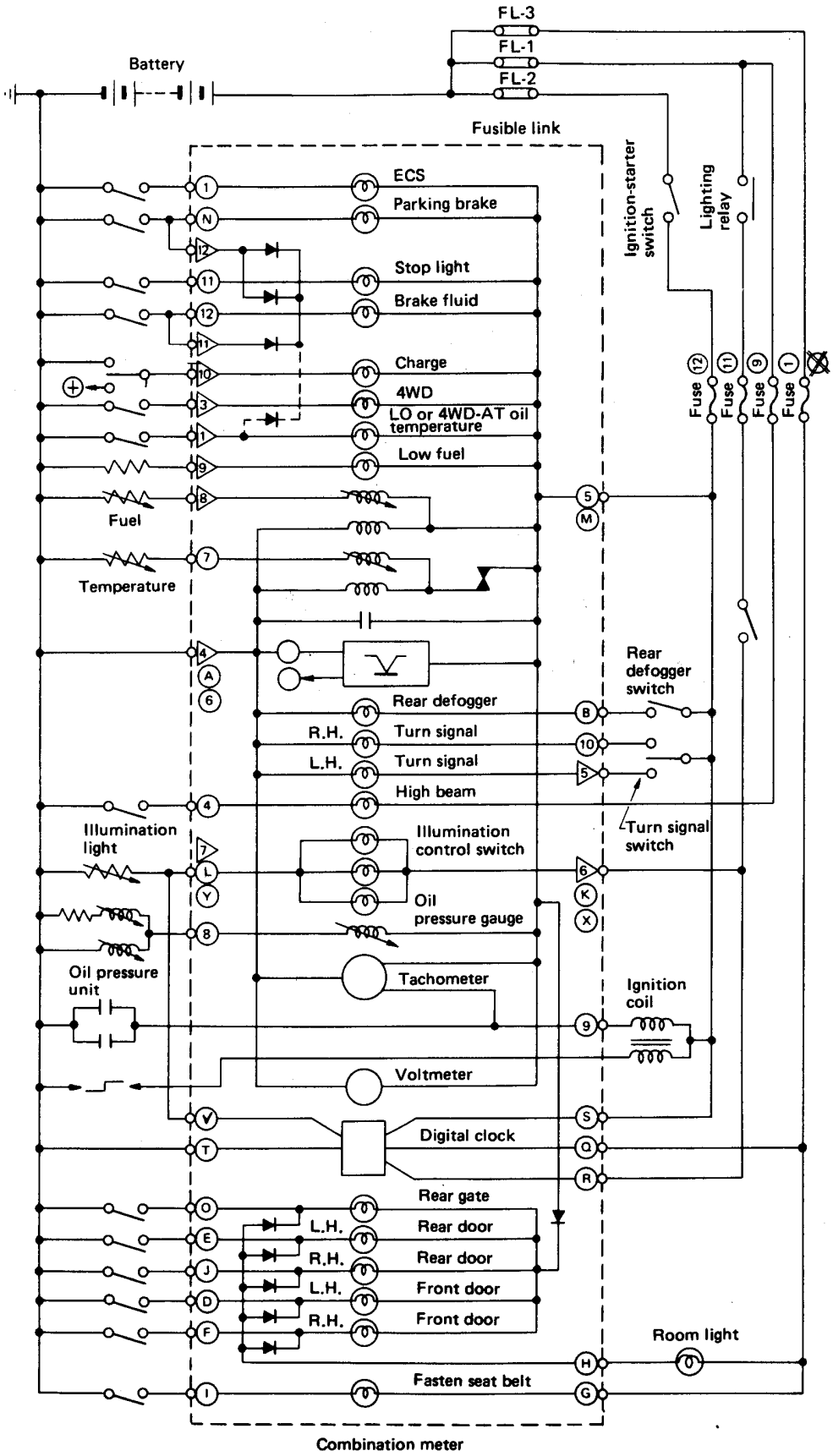

Fig. 15-290

A25-735

Downloaded from www.Manualslib.com manuals search engine

Downloaded from www.Manualslib.com manuals search engine

1) Speedometer

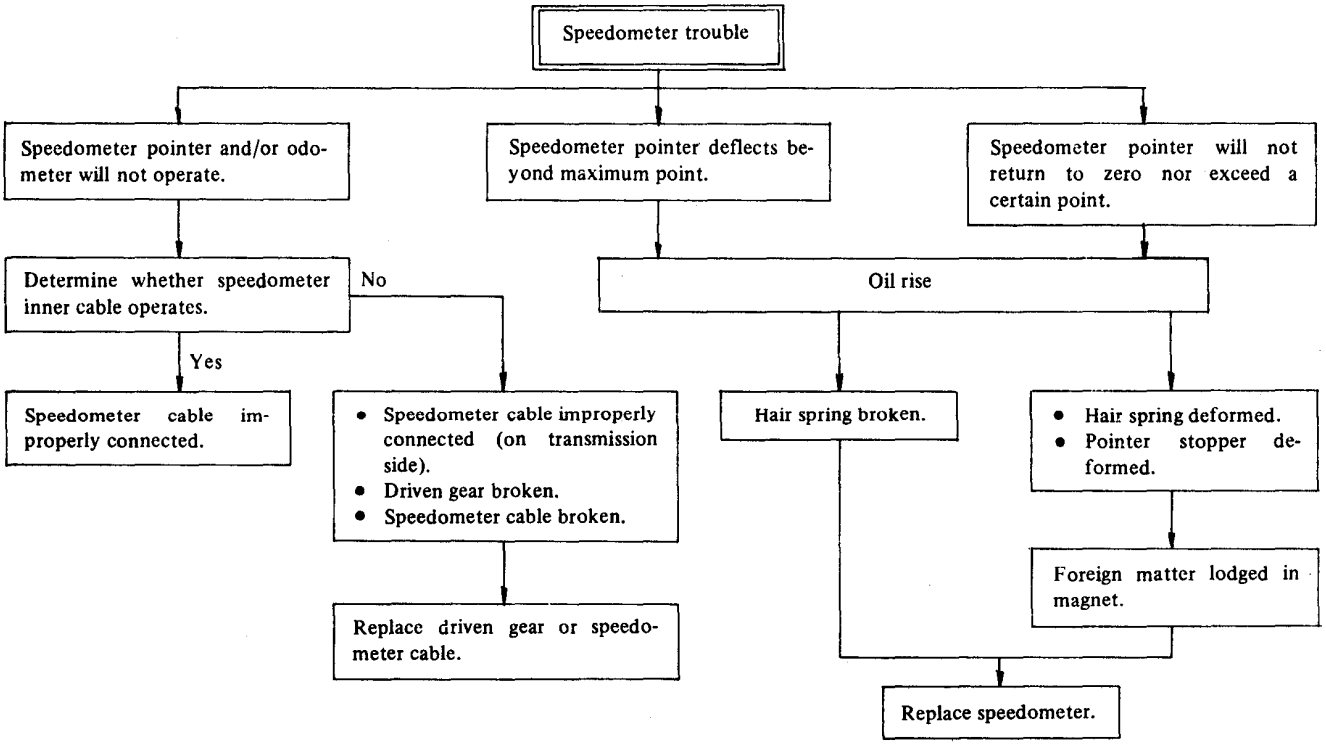

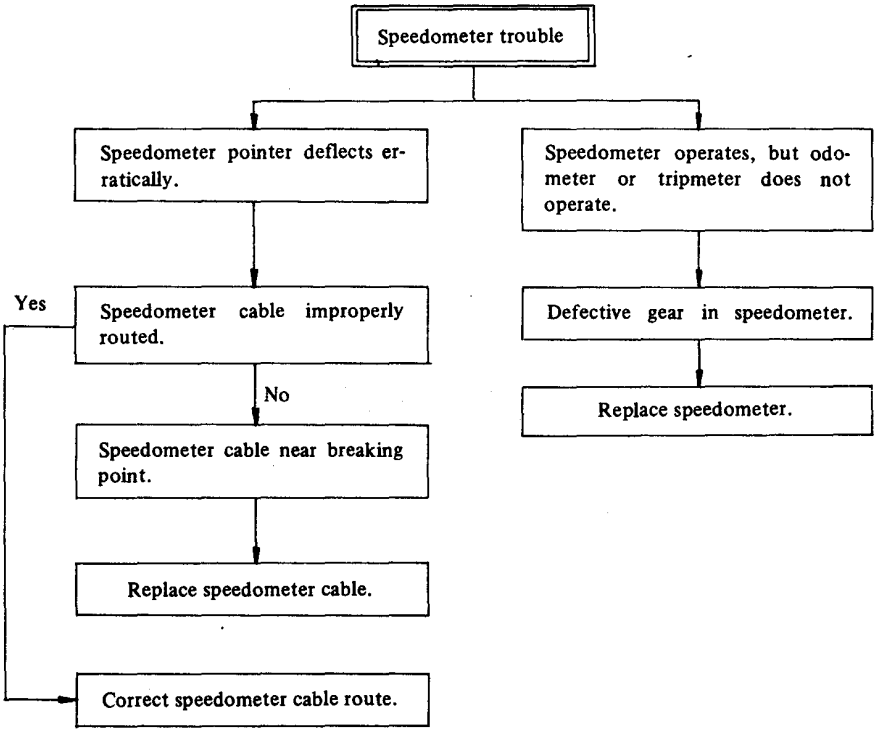

Downloaded from www.Manualslib.com manuals search engine

Downloaded from www.Manualslib.com manuals search engine

3) Fuel Gauge and Fuel Gauge Unit

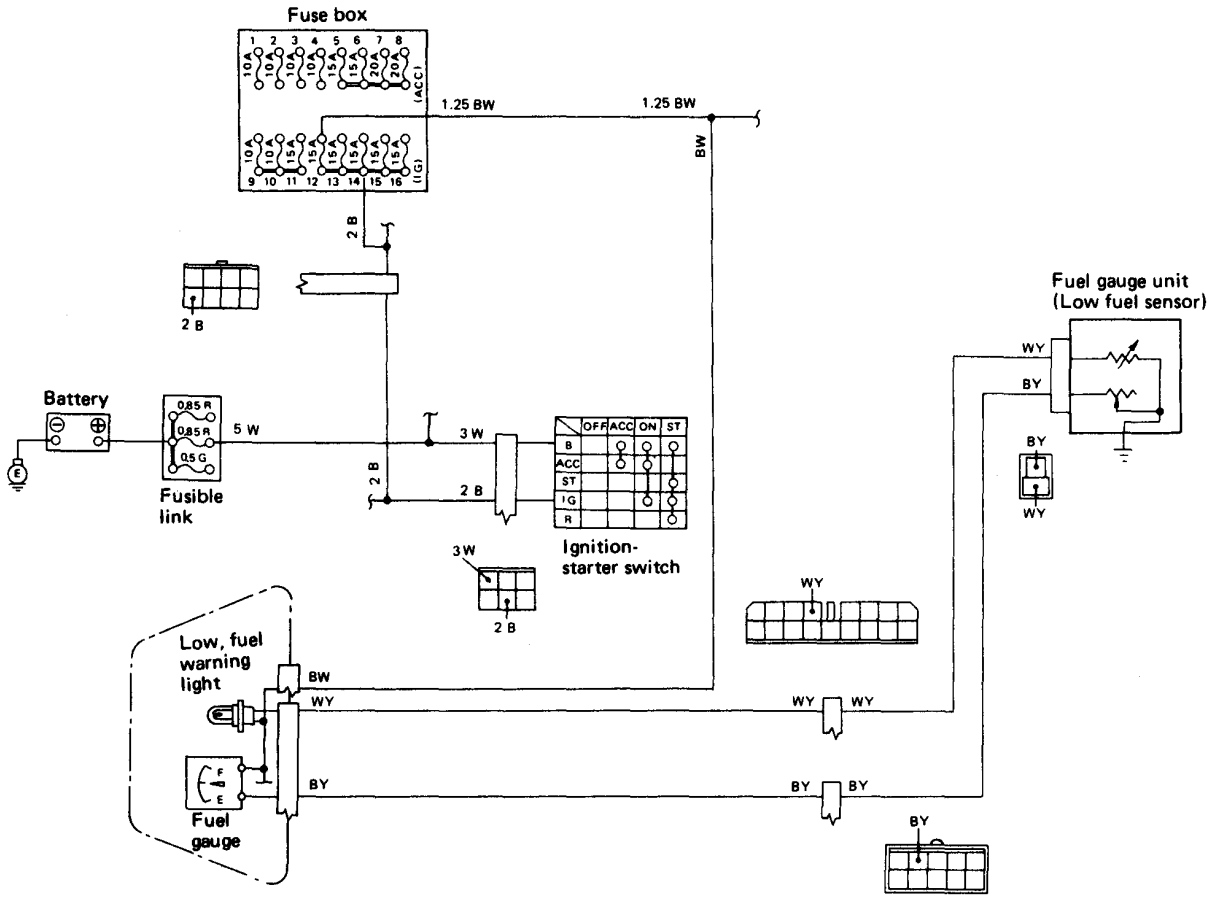

A25-737

Fig. 15-292

Downloaded from www.Manualslib.com manuals search engine

Downloaded from www.Manualslib.com manuals search engine

2. GL model

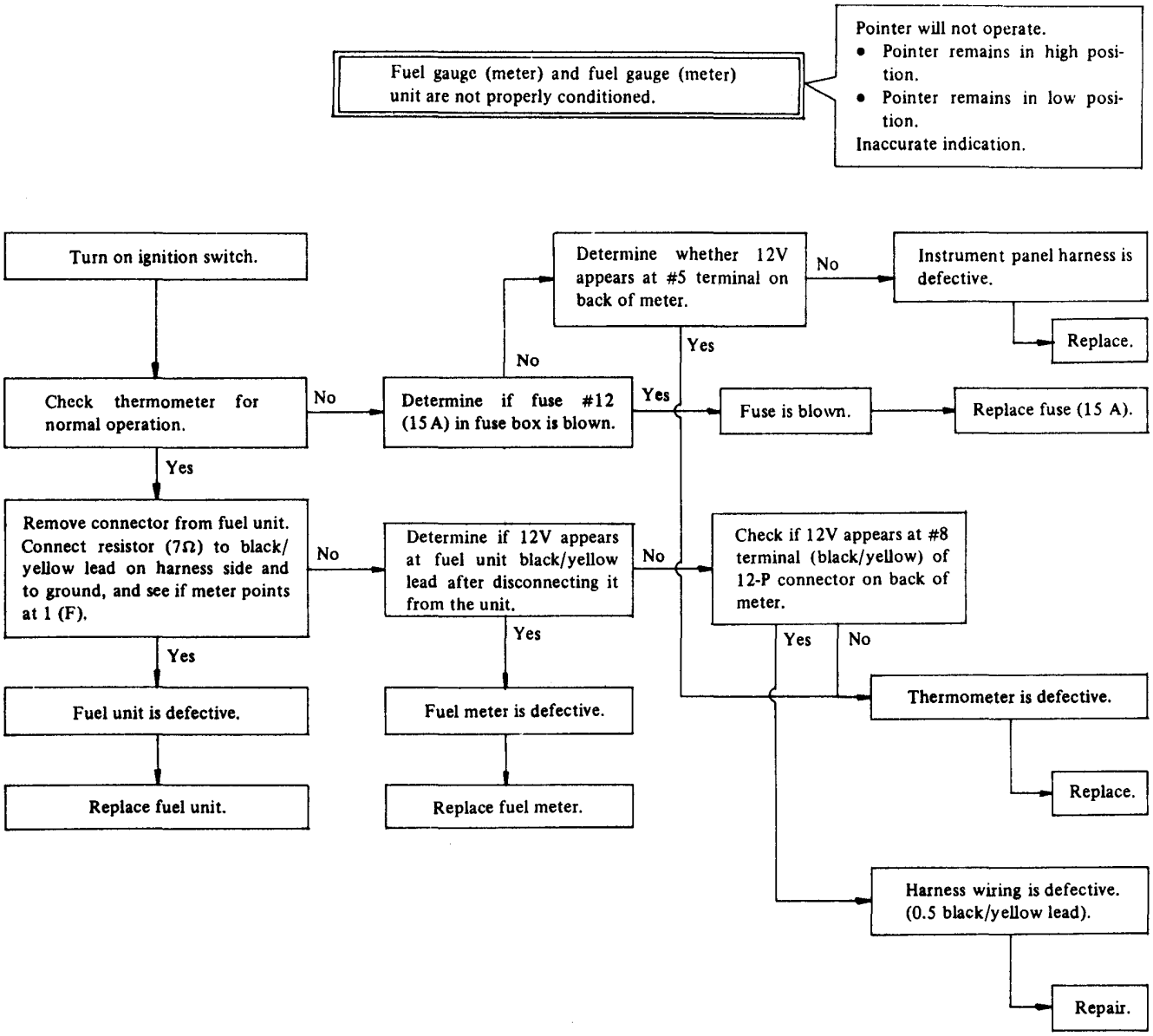

Downloaded from www.Manualslib.com manuals search engine

Downloaded from www.Manualslib.com manuals search engine

5) Tachometer

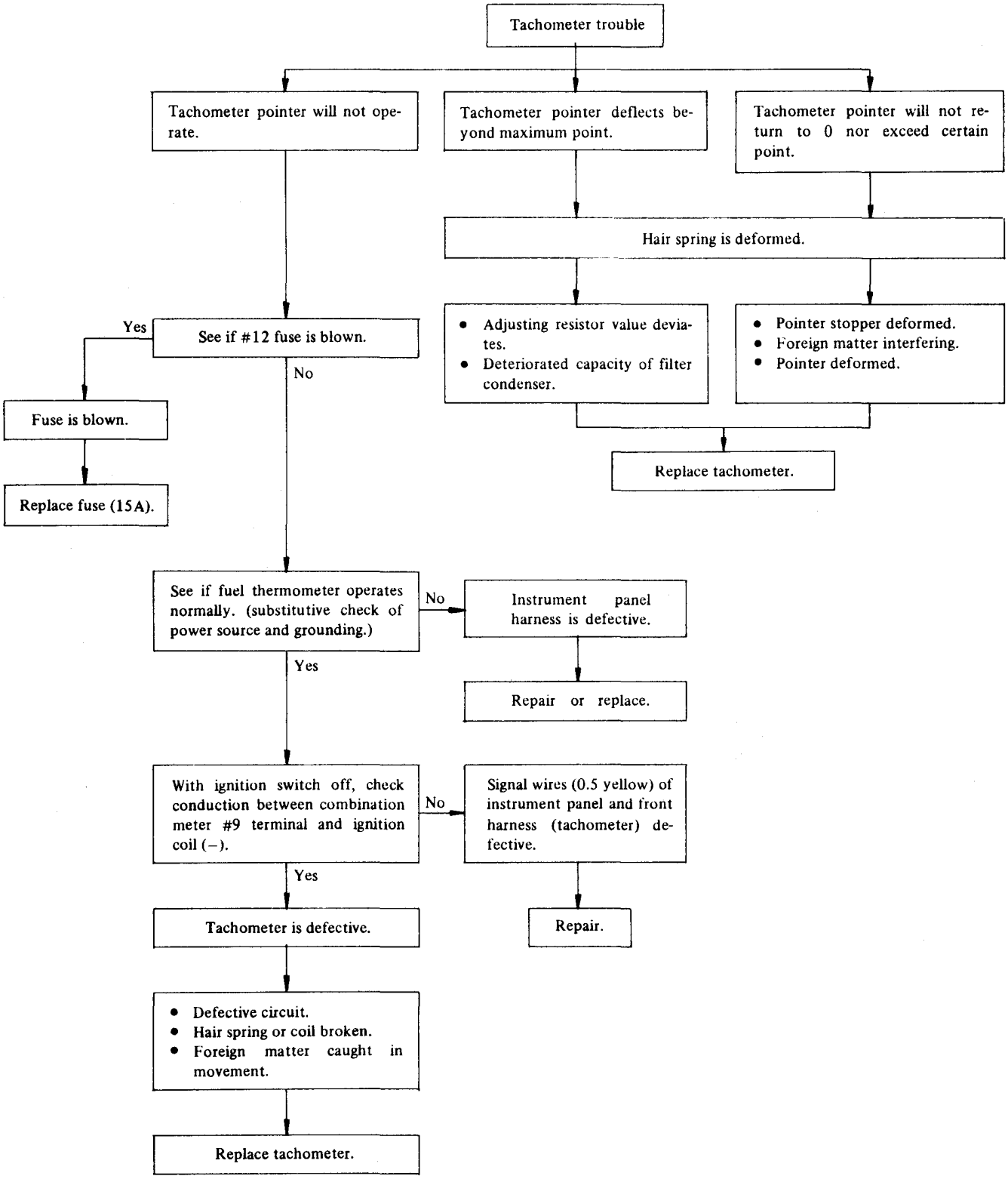

Downloaded from www.Manualslib.com manuals search engine

Downloaded from www.Manualslib.com manuals search engine

7) Voltmeter

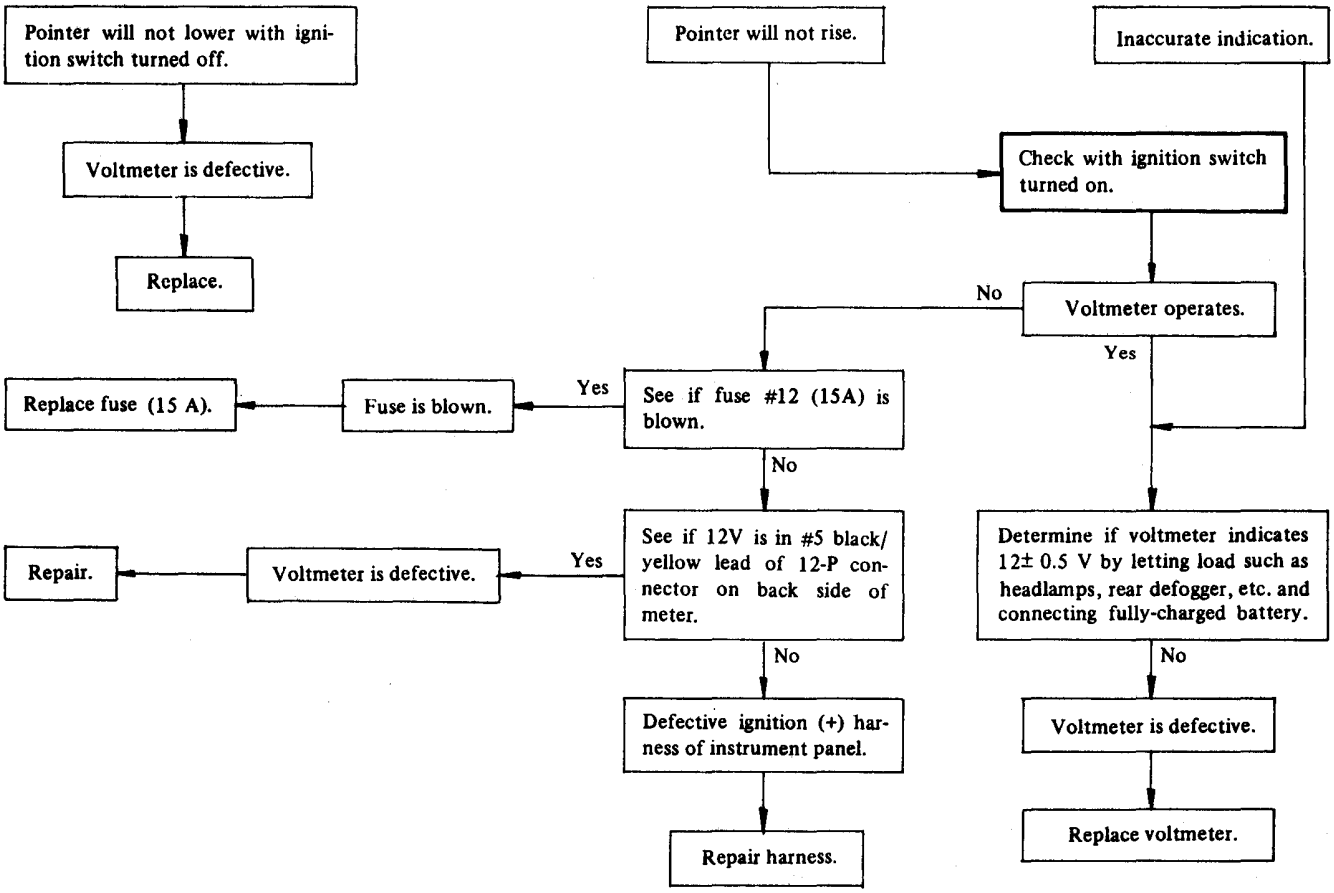

Downloaded from www.Manualslib.com manuals search engine

Downloaded from www.Manualslib.com manuals search engine

B. DIGITAL TYPE (OPTION)

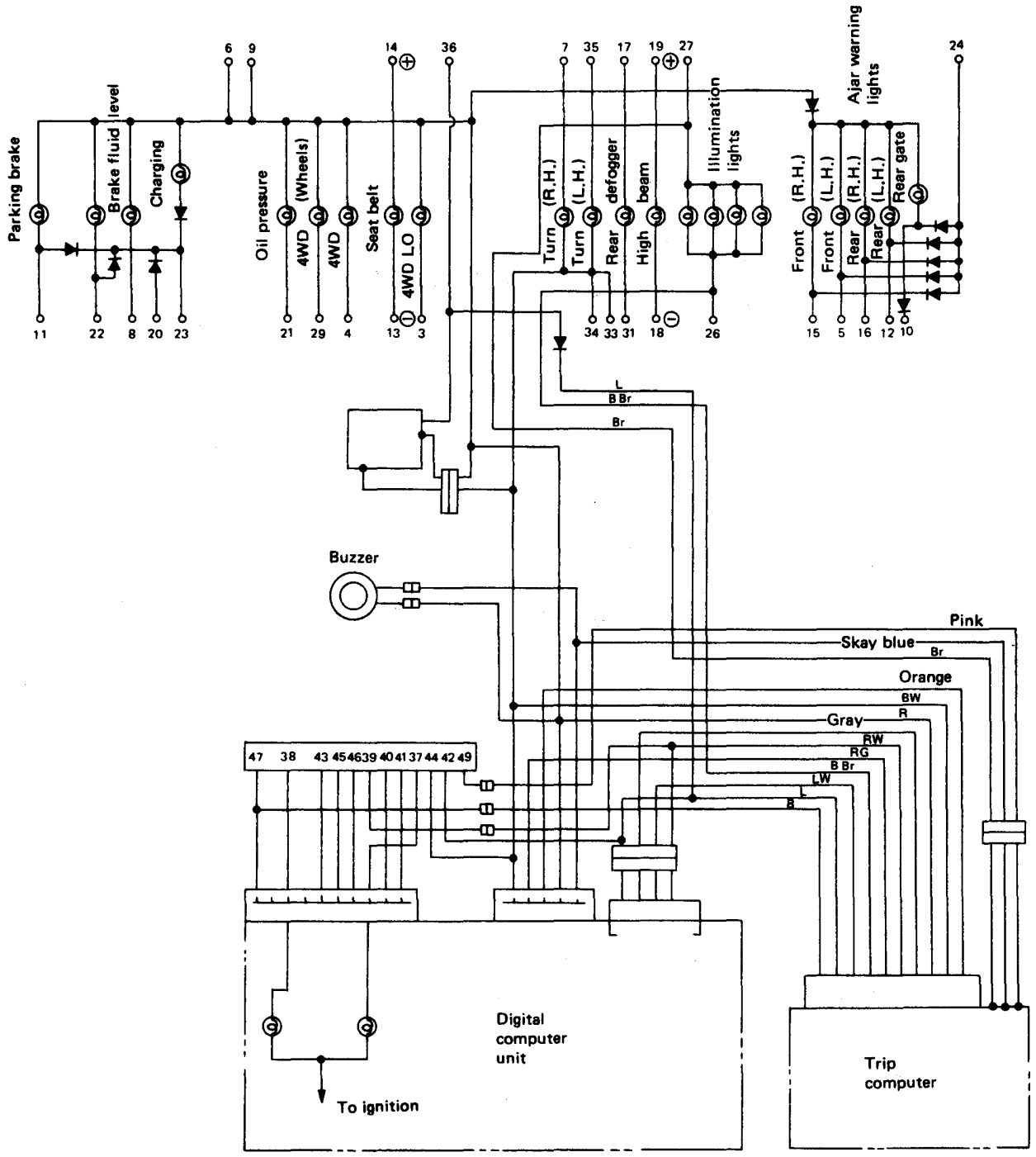

Fig. 15-293

Downloaded from www.Manualslib.com manuals search engine

Downloaded from www.Manualslib.com manuals search engine

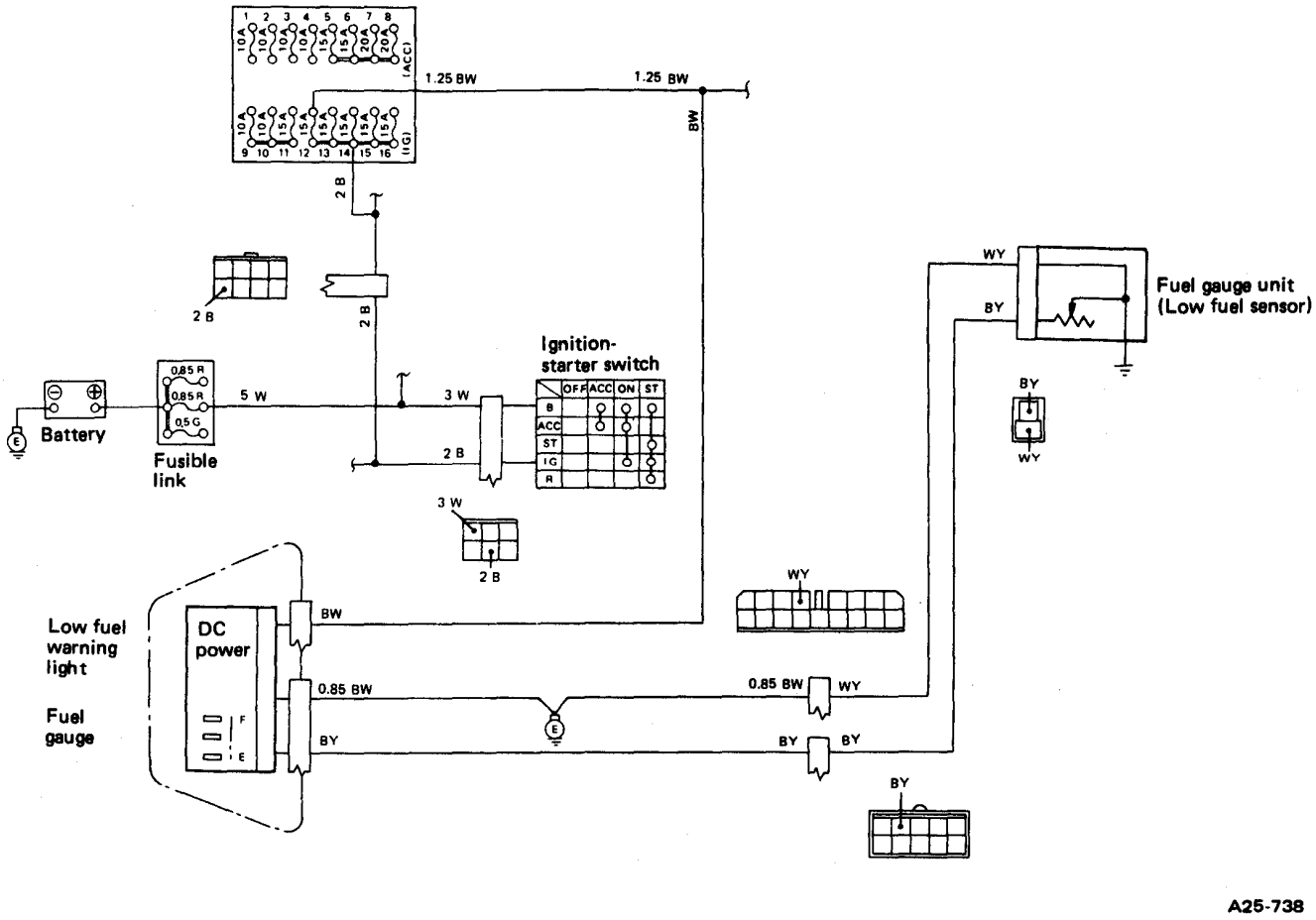

Fig. 15-296

Downloaded from www.Manualslib.com manuals search engine

Downloaded from www.Manualslib.com manuals search engine

b. Meter displays when ignition-starter switch is on, but trip computer is cancelled when turned off.
The trip computer comes into test program* condition each time the ignition-starter switch is turned on.
(These troubles are due to the condition where the battery power is not supplied to the micro-computer.)

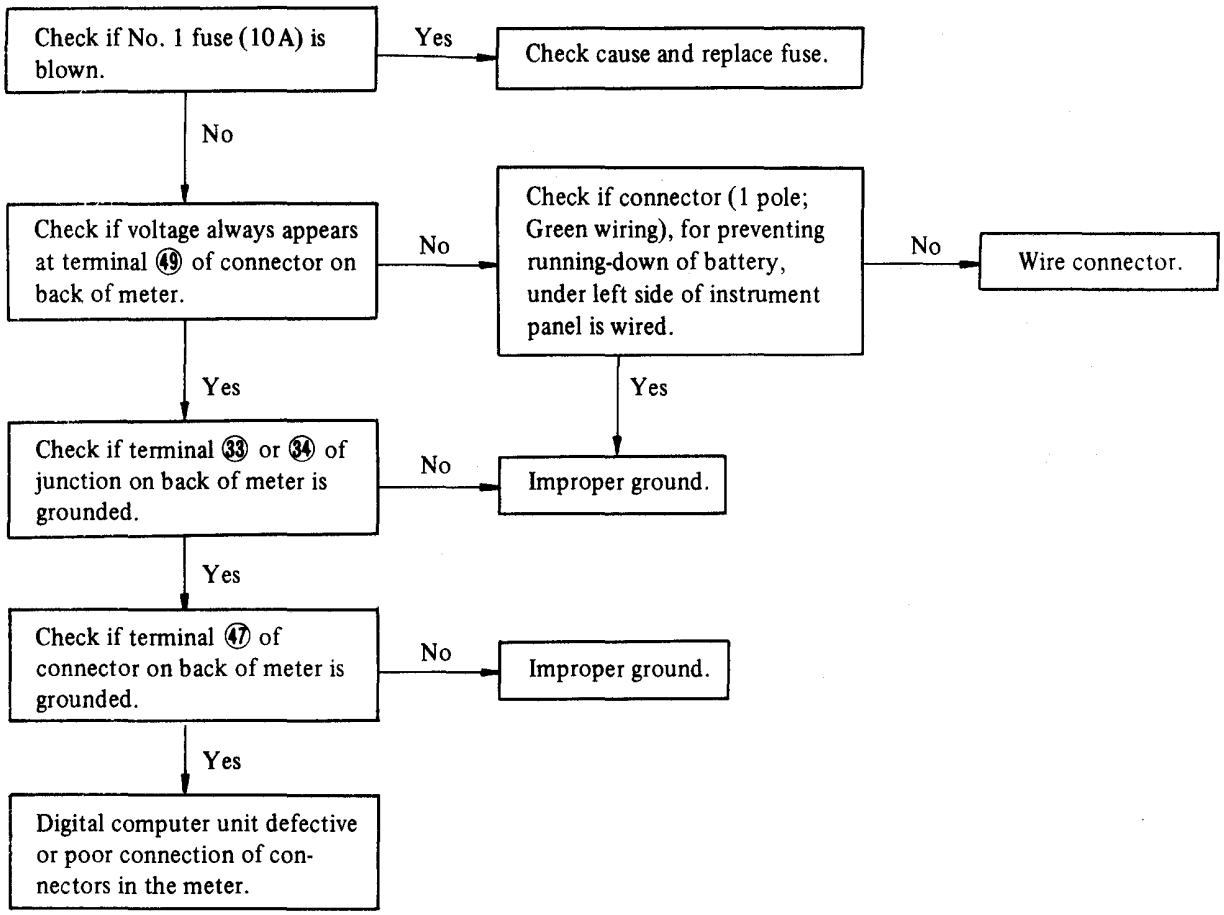

*Test program: By putting the digital meter and trip computer in the test program condition, it is possible to check the wirings and operation of the fluorescent display tubes, if the chime and buzzer sound, and if low fuel warning light is broken.

Downloaded from www.Manualslib.com manuals search engine

Downloaded from www.Manualslib.com manuals search engine

e. Fuel gauge will not operate.

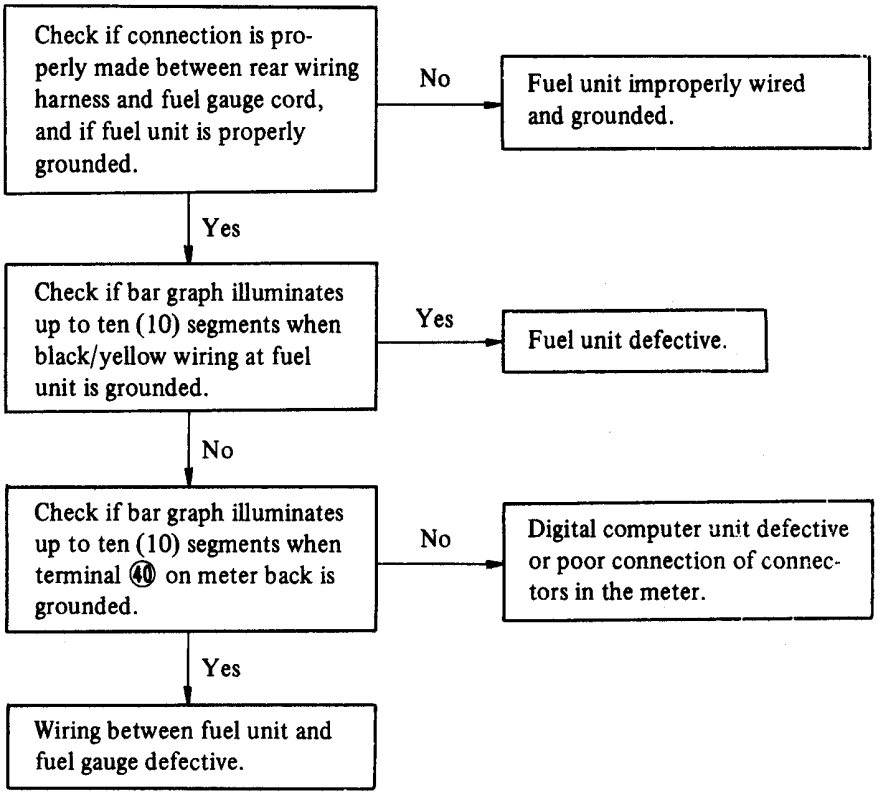

f. Temperature gauge will not operate.

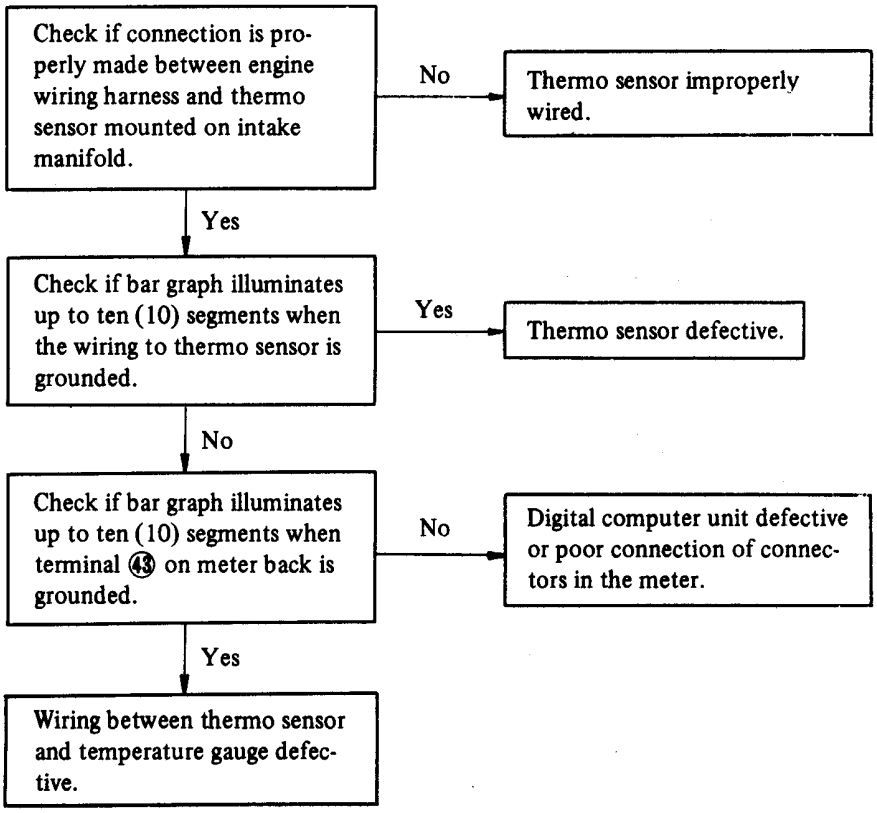

Downloaded from www.Manualslib.com manuals search engine

Downloaded from www.Manualslib.com manuals search engine

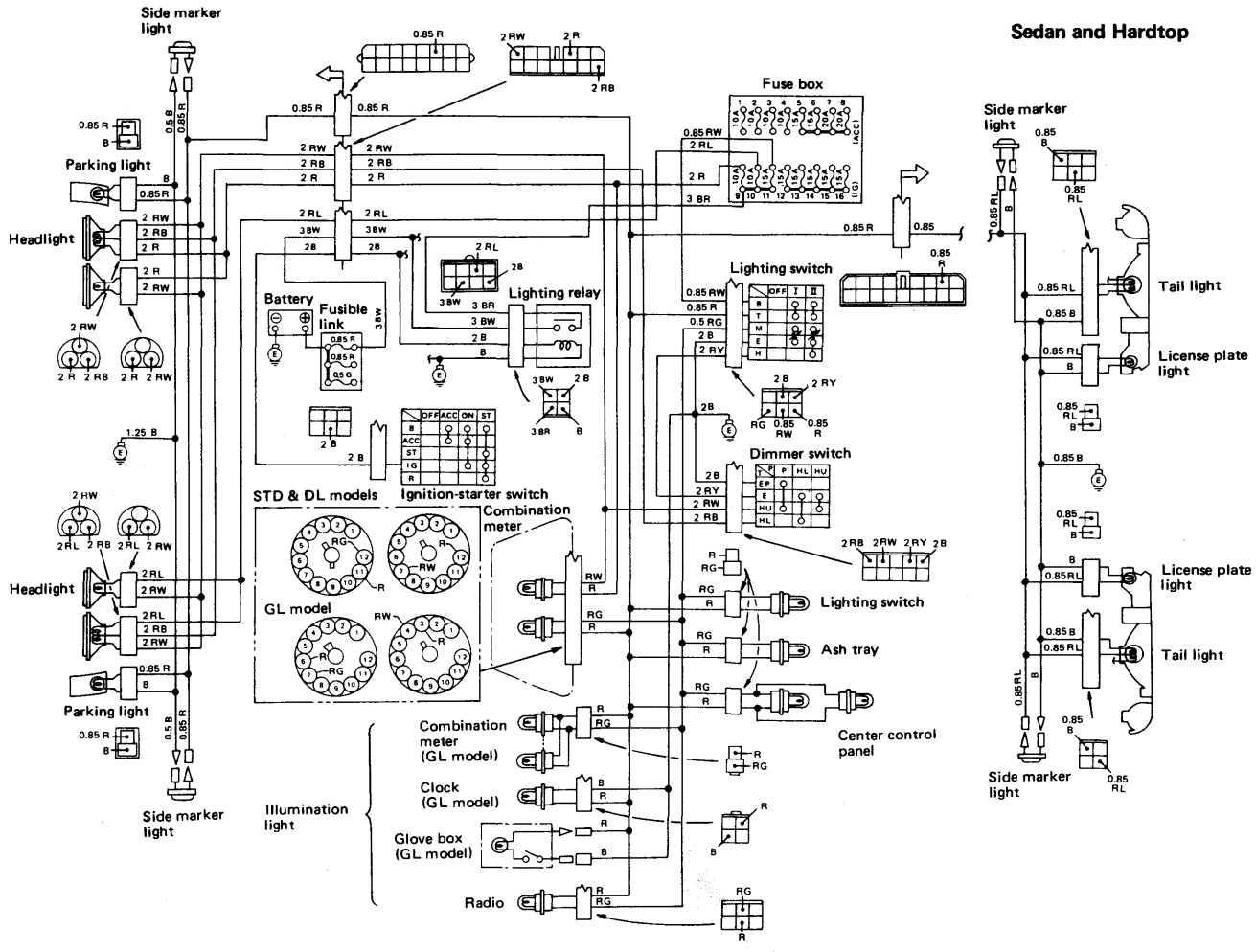

Downloaded from www.Manualslib.com manuals search engine

Downloaded from www.Manualslib.com manuals search engine

When the lighting switch is set to the 1st or 2nd step, the parking light, tail light, and/or license light will not light.

↓

Check after having set the lighting switch to the 1st step.

↓

Check if the fuses #11 (15 A/license, tail, and parking lights) are not blown.

→ Yes → Check the cause and repair. → Replace the fuse.

↓ No

Check if the voltage is 12 V at the terminals 0.85 RW on the loaded sides of the fuses (15 A/license, tail, and parking lights).

→ No →
- Connection of lighting relay connector is poor, or the relay is defective.
- The connector is in faulty contact or the fusible link is blown.

→
- Replace lighting relay.
- Repair the connector or replace the fusible link.

↓ Yes

Remove the lighting switch, and check if there is conduction between 0.85 RW and 0.85 R when set to the 1st and 2nd steps.

→ No → The contact on the switch is defective. → Replace the switch.

↓ Yes

→ The connector is in faulty contact with the harness, or the wiring is broken between the lighting switch and each light. → Repair the connector or harness.

Downloaded from www.Manualslib.com manuals search engine

Downloaded from www.Manualslib.com manuals search engine

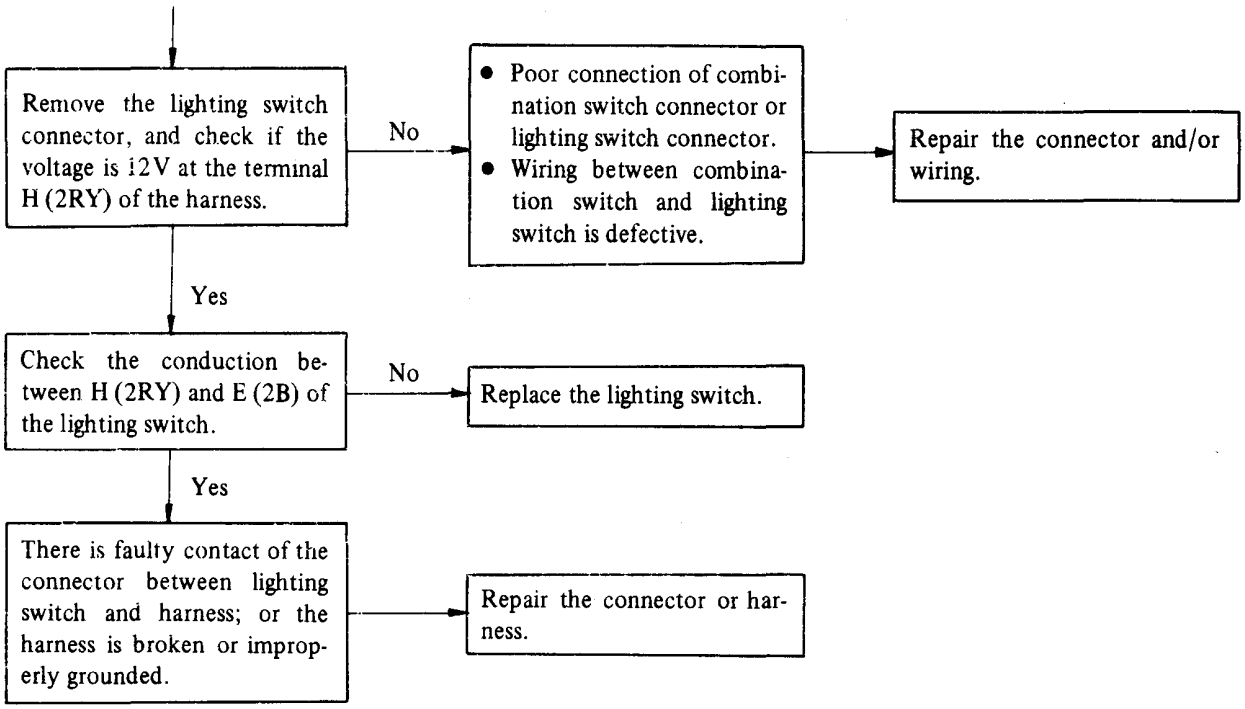

Downloaded from www.Manualslib.com manuals search engine

Downloaded from www.Manualslib.com manuals search engine

1) Turn Signal Switch and Turn Signal & Hazard Unit

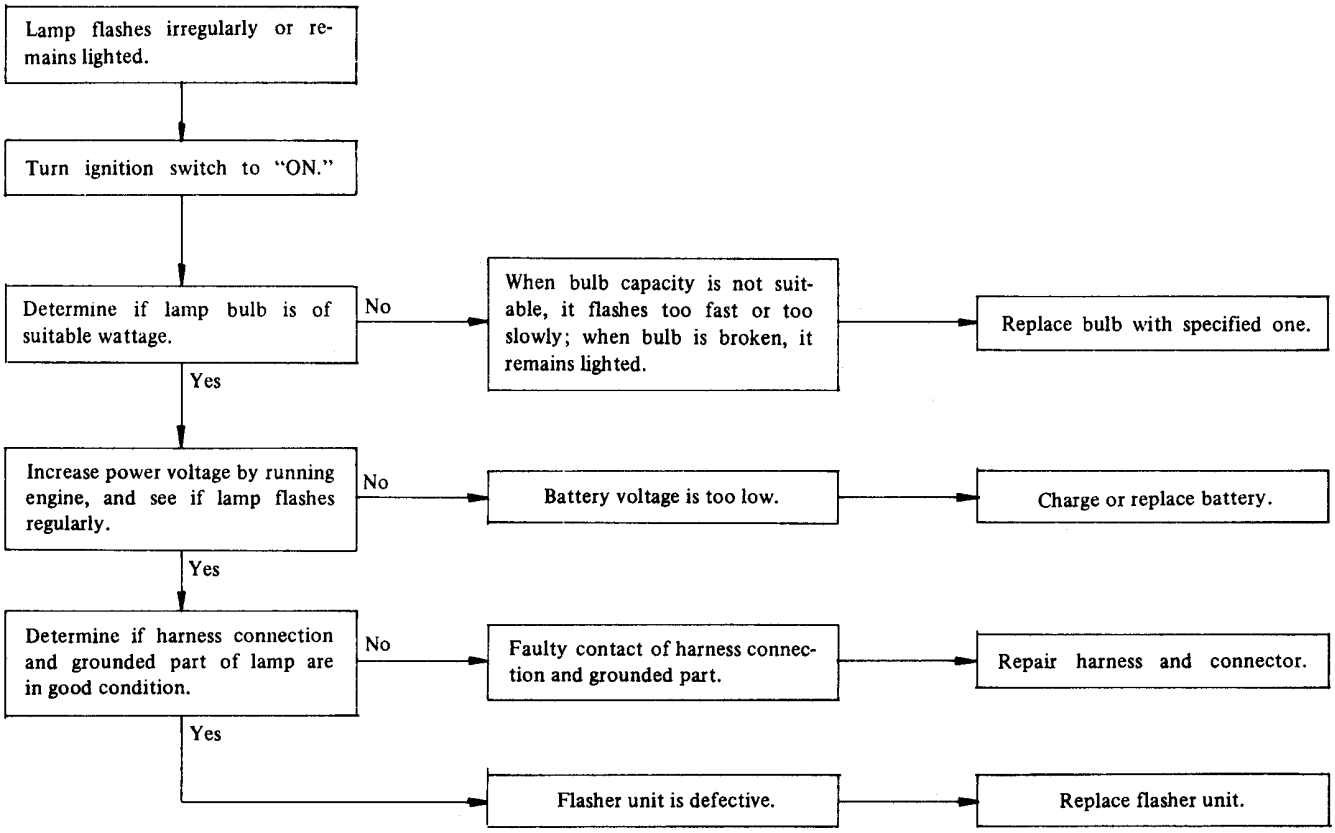

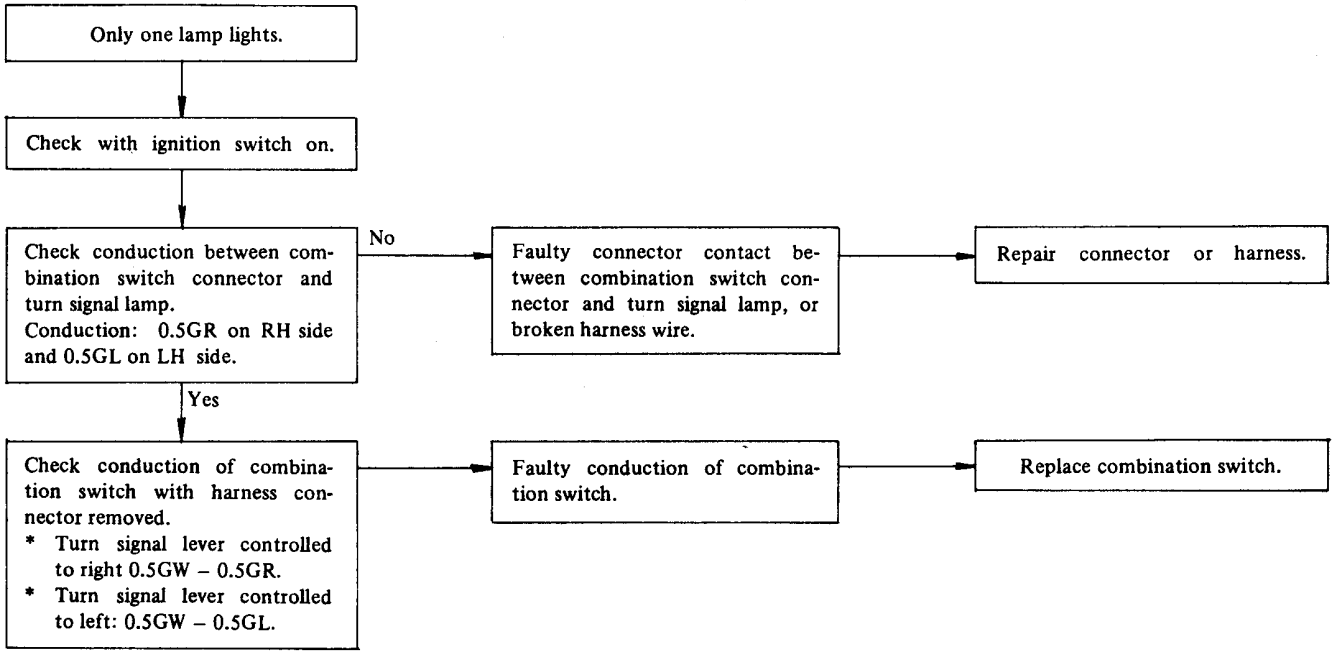

Downloaded from www.Manualslib.com manuals search engine

Downloaded from www.Manualslib.com manuals search engine

2) Hazard Warning Light Switch and Turn Signal & Hazard Unit

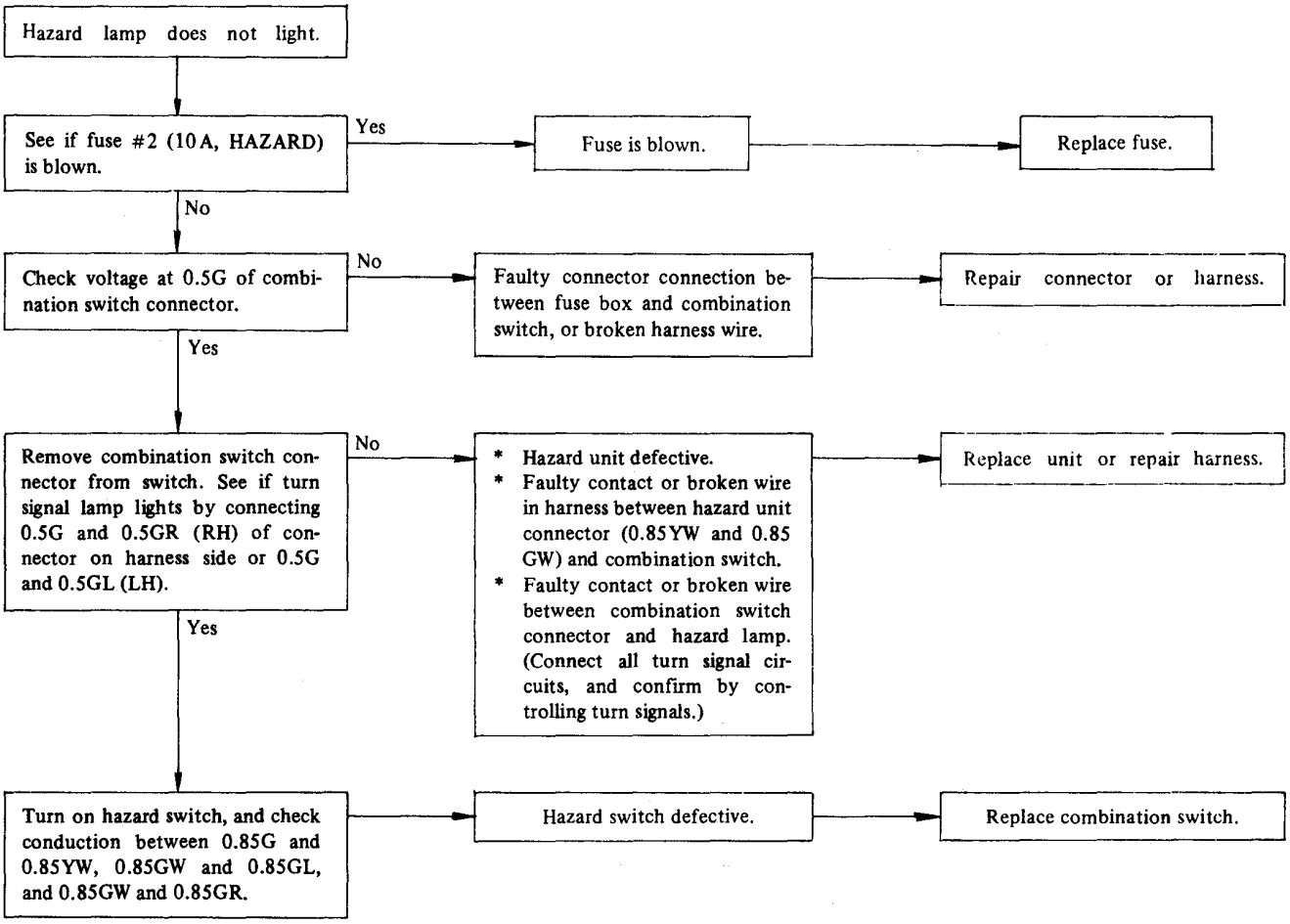

Downloaded from www.Manualslib.com manuals search engine

Downloaded from www.Manualslib.com manuals search engine

- Automatic transmission vehicle

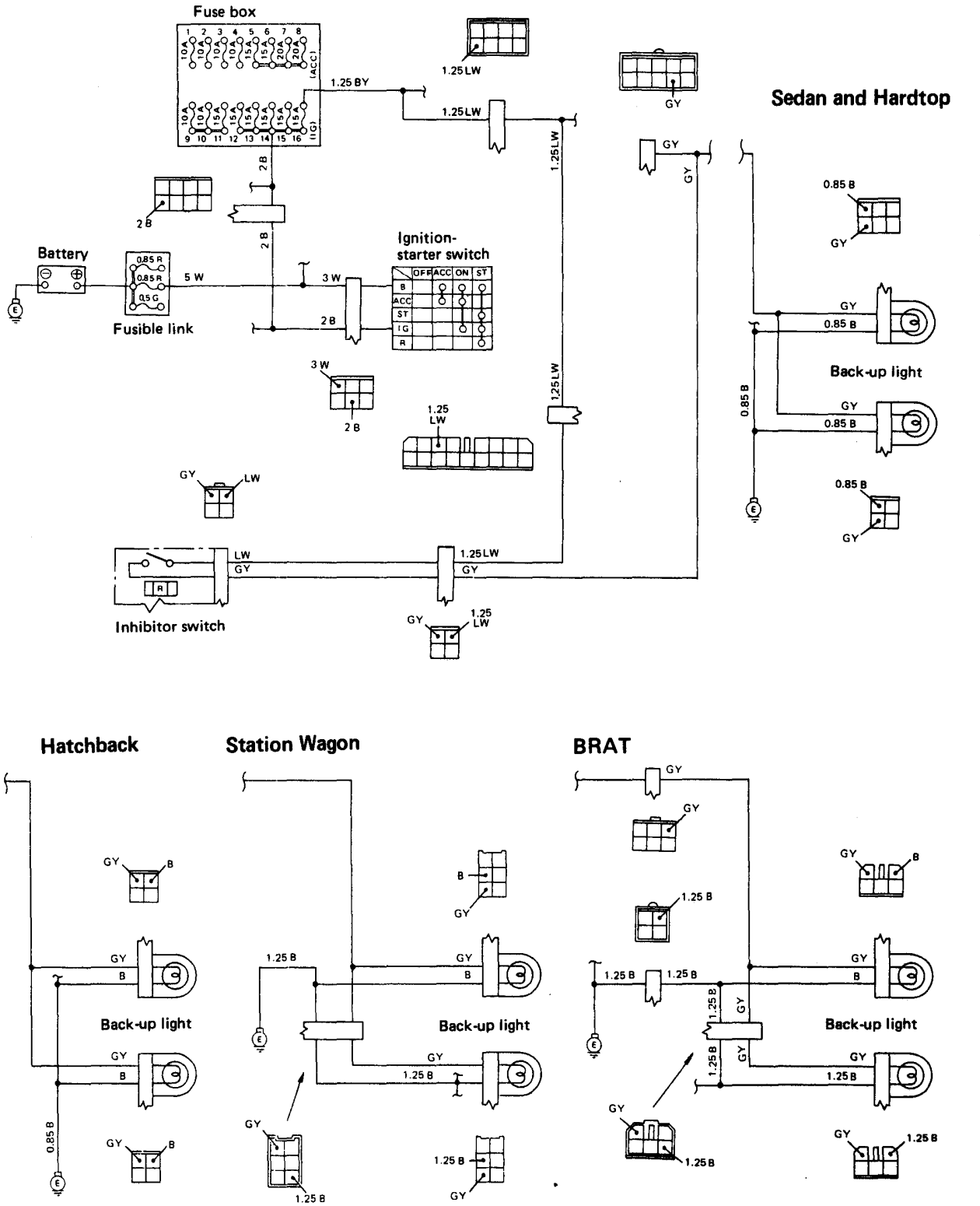

Fig. 15-300

Downloaded from www.Manualslib.com manuals search engine

Downloaded from www.Manualslib.com manuals search engine

• 4WD model only

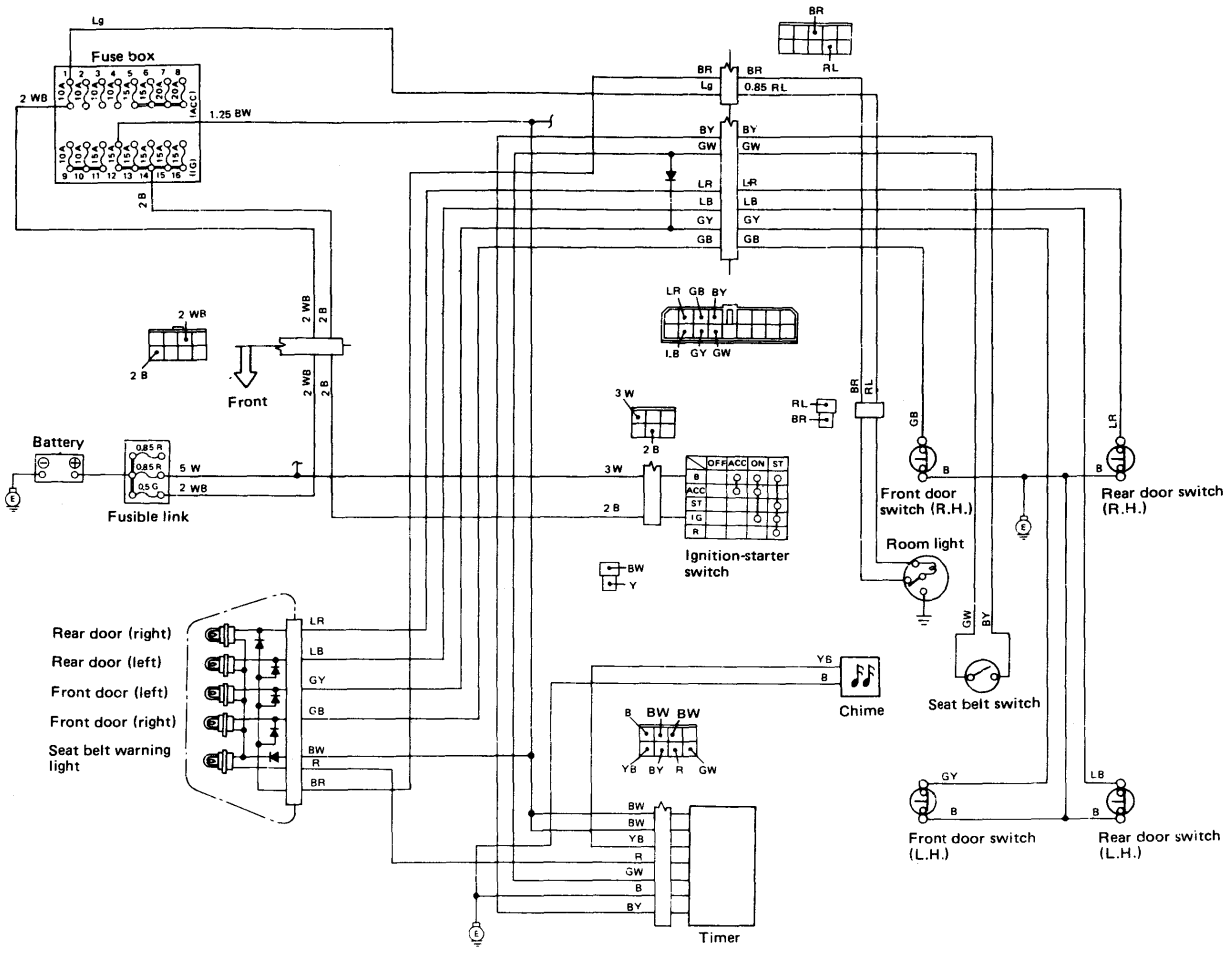

Fig. 15-302

A25-742

Downloaded from www.Manualslib.com manuals search engine

Downloaded from www.Manualslib.com manuals search engine

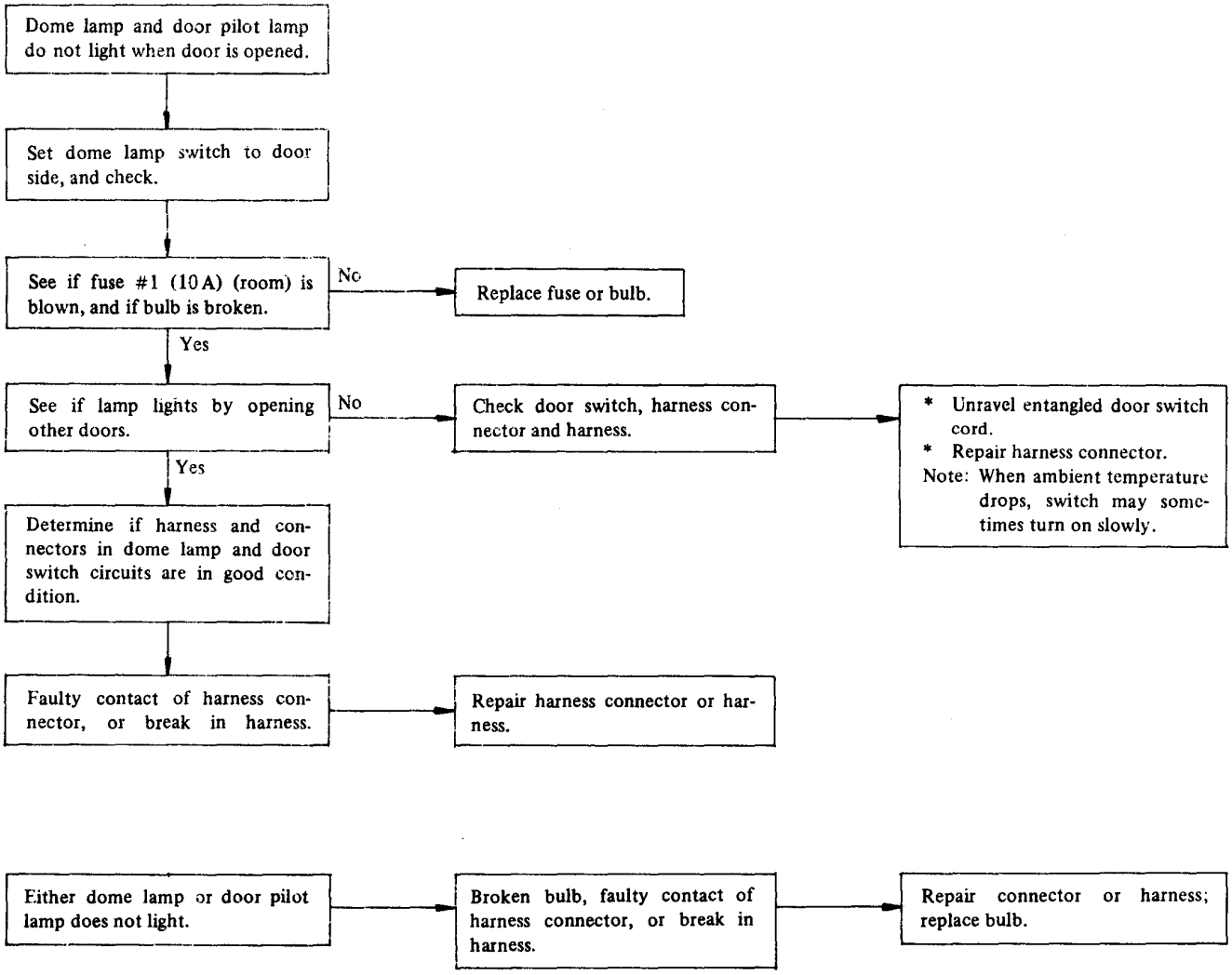

Downloaded from www.Manualslib.com manuals search engine

Downloaded from www.Manualslib.com manuals search engine

b) When chime does not sound, but fasten seat belt warning light turns on;

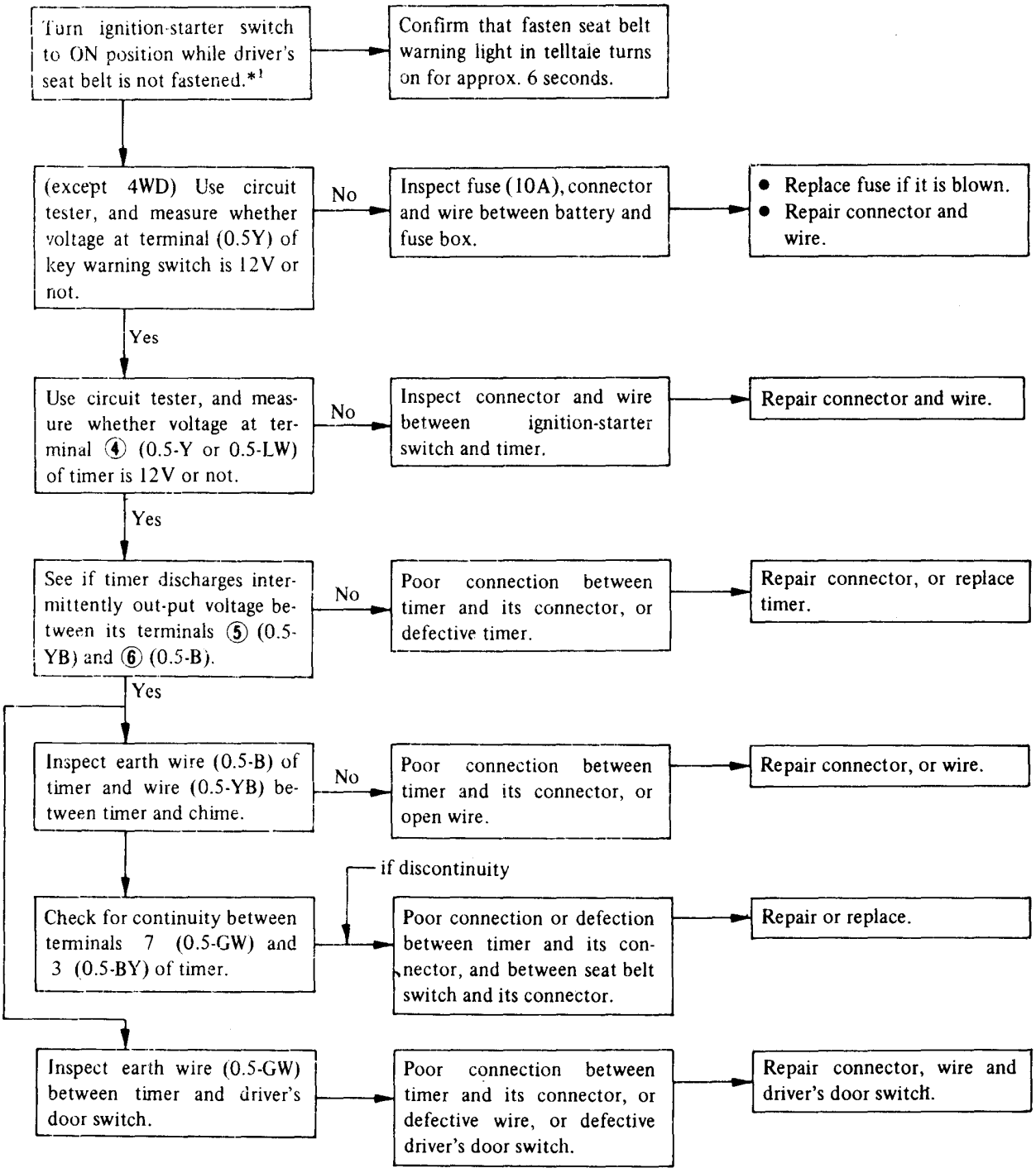

*1: Never leave the switch in ON position all the way.

Downloaded from www.Manualslib.com manuals search engine

Downloaded from www.Manualslib.com manuals search engine

B. BRAT

a) When chime does not sound and also fasten seat belt warning light does not turn on;

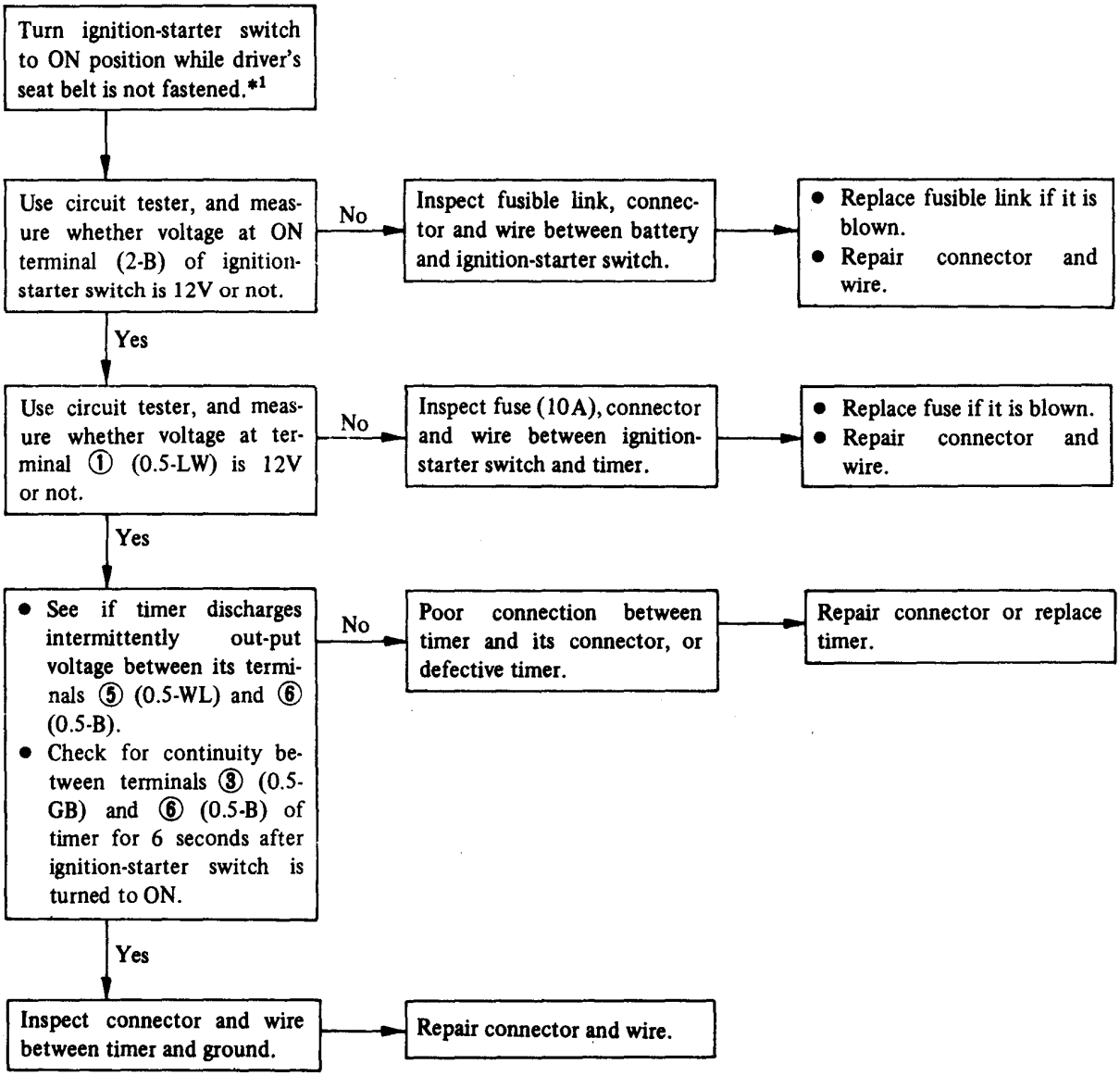

*1: Never leave the switch in ON position all the way.

Downloaded from www.ManualsLib.com manuals search engine

Downloaded from www.Manualslib.com manuals search engine

7. Stop Light Warning System

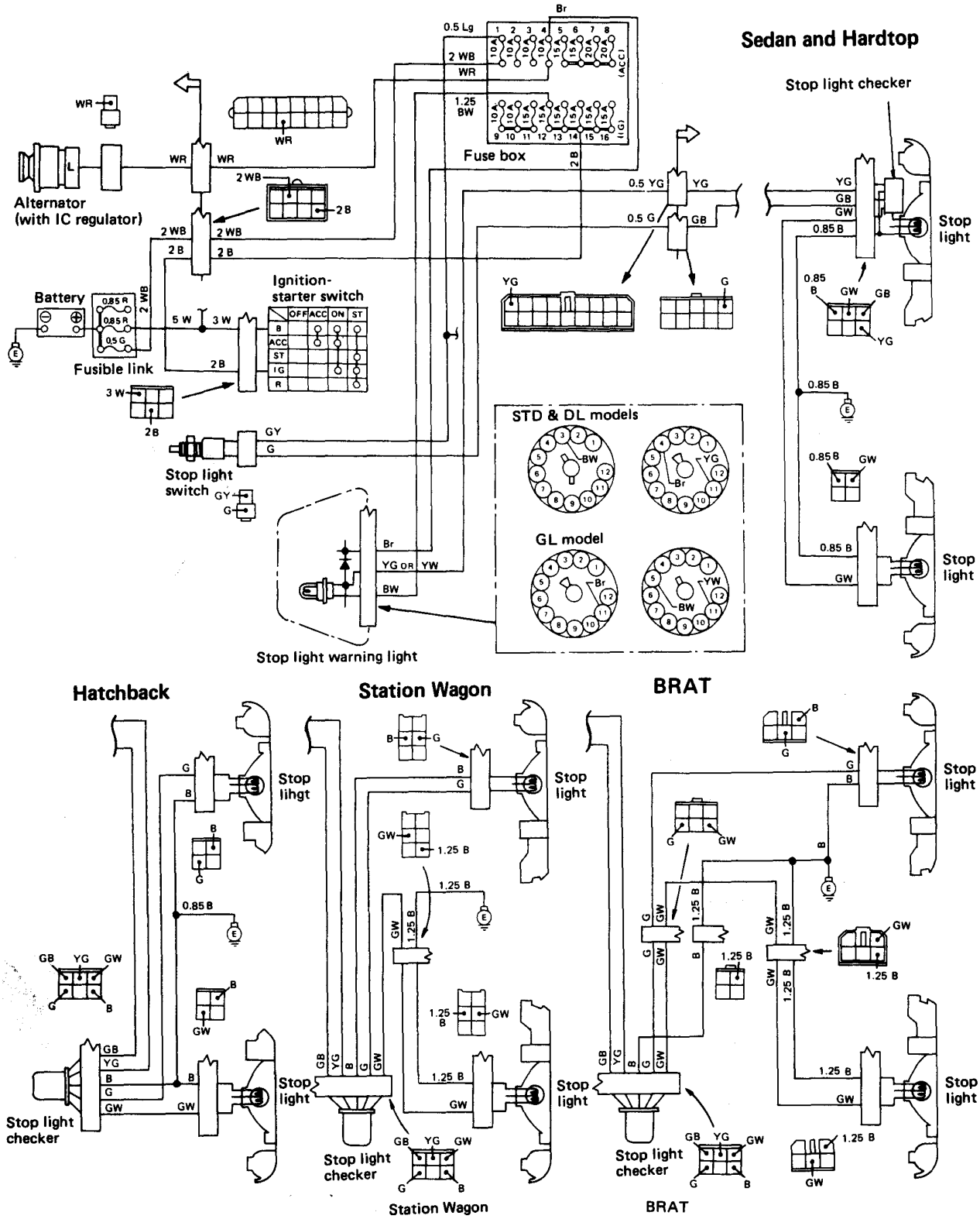

A25-744

Fig. 15-304

Downloaded from www.Manualslib.com manuals search engine

Downloaded from www.Manualslib.com manuals search engine

8. Parking Brake System

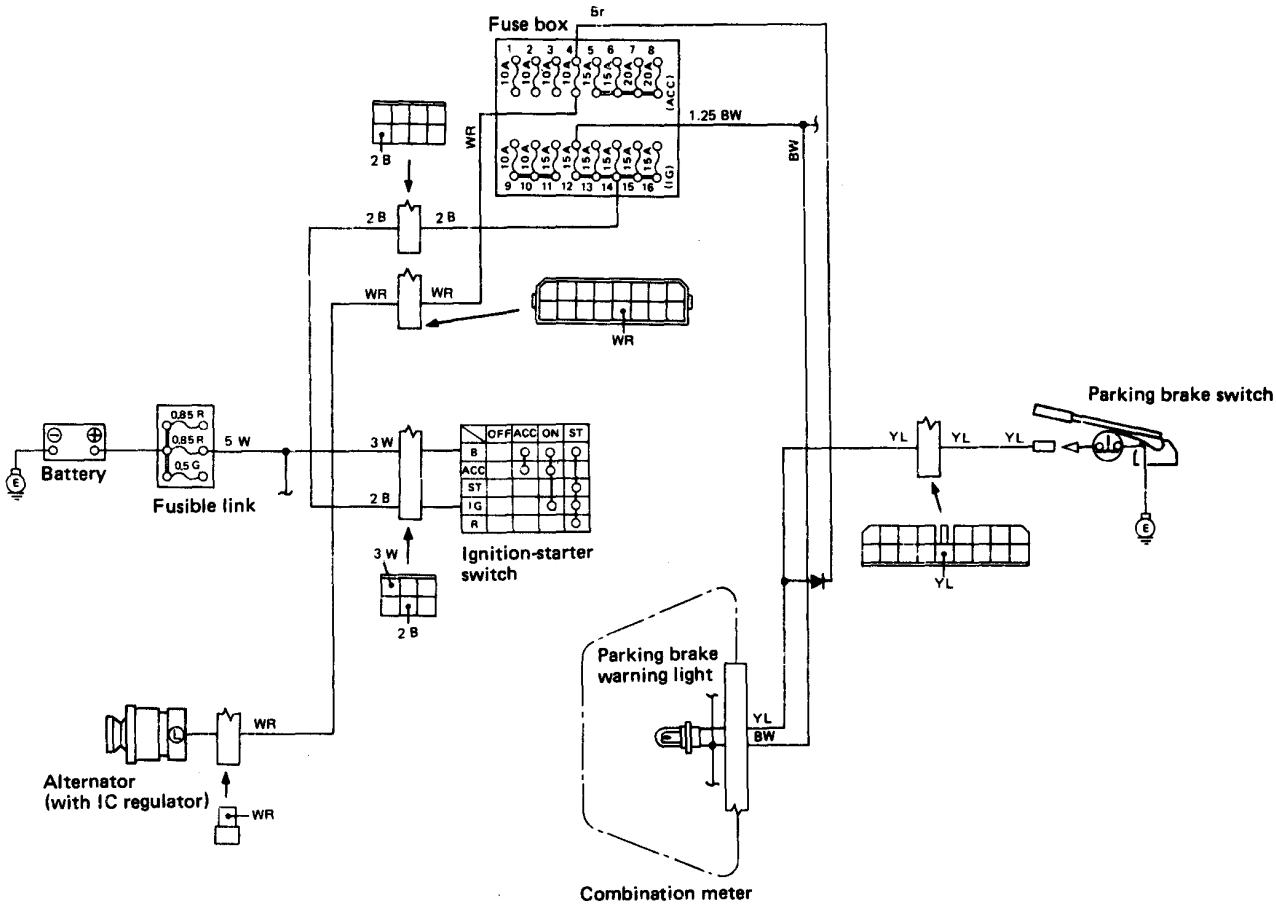

Fig. 15-305

Downloaded from www.Manualslib.com manuals search engine

Downloaded from www.Manualslib.com manuals search engine

10. Four-wheel Drive System

- 4WD

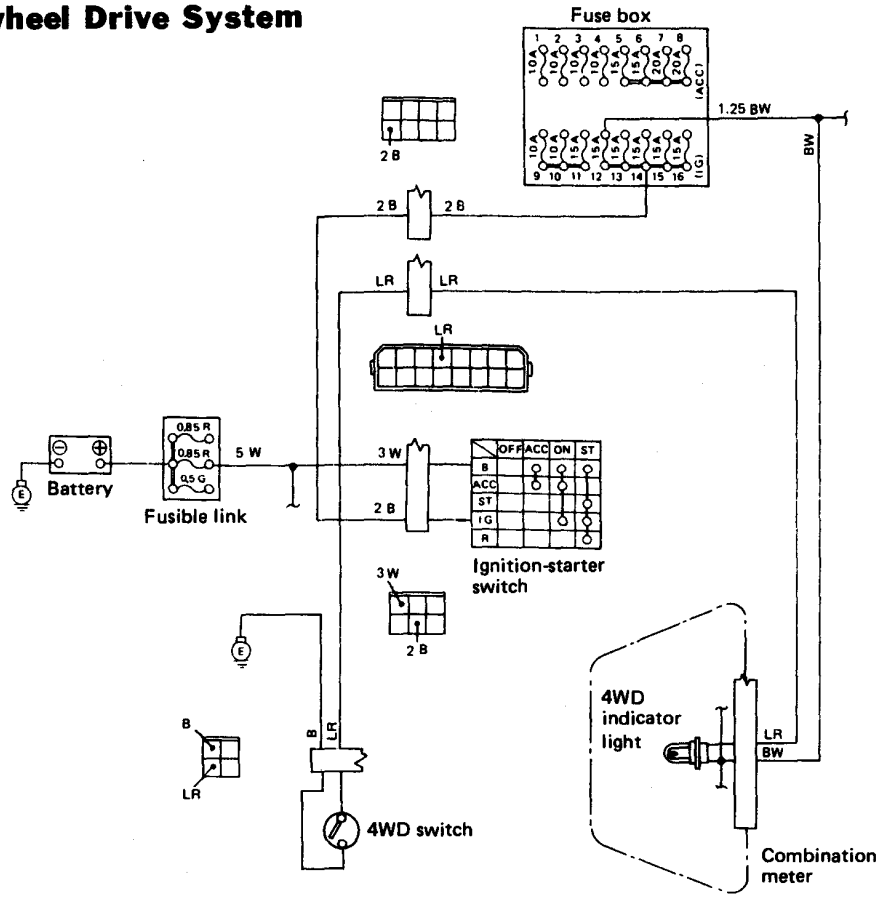

Fig. 15-307

A25-746

- 4WD Dual-range

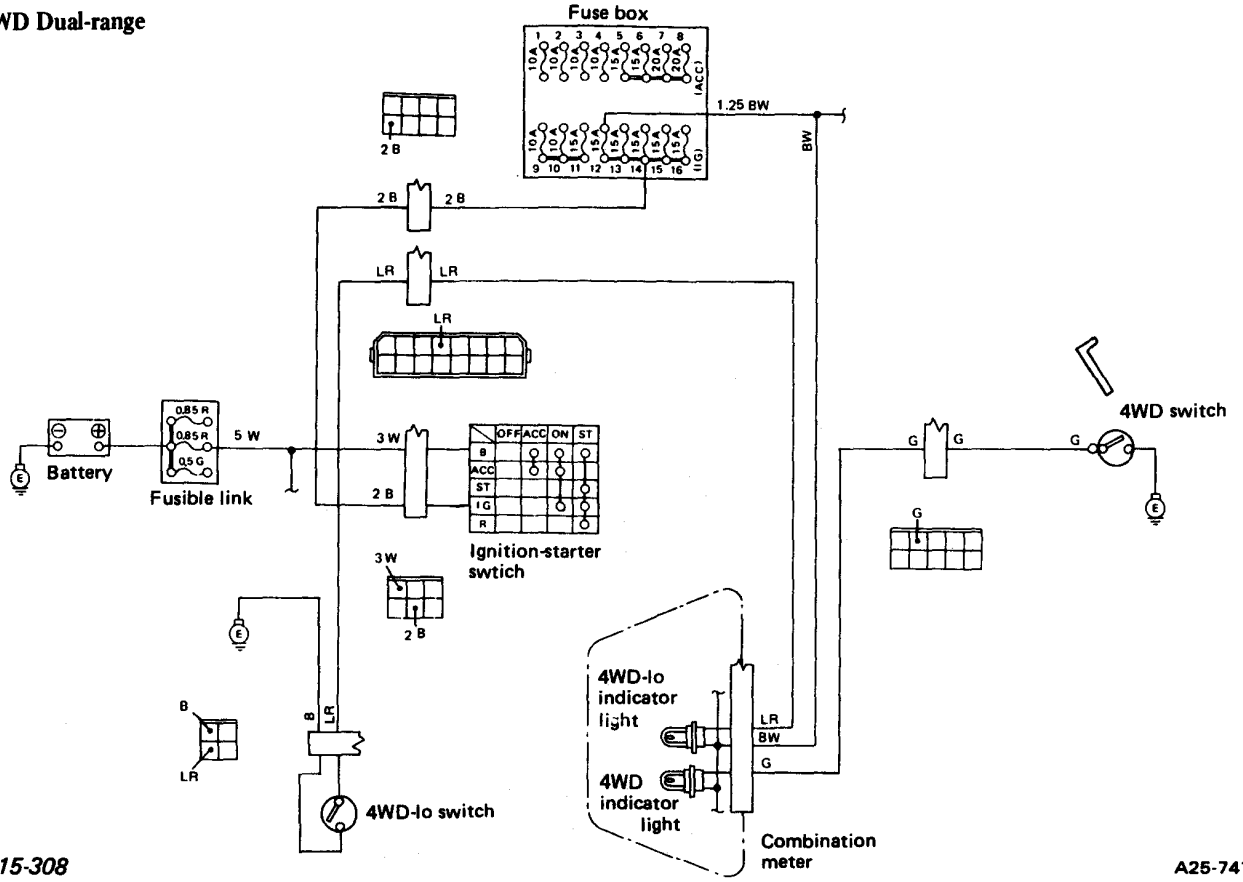

Fig. 15-308

A25-747

Downloaded from www.Manualslib.com manuals search engine

Downloaded from www.Manualslib.com manuals search engine

(4WD-AT control system)

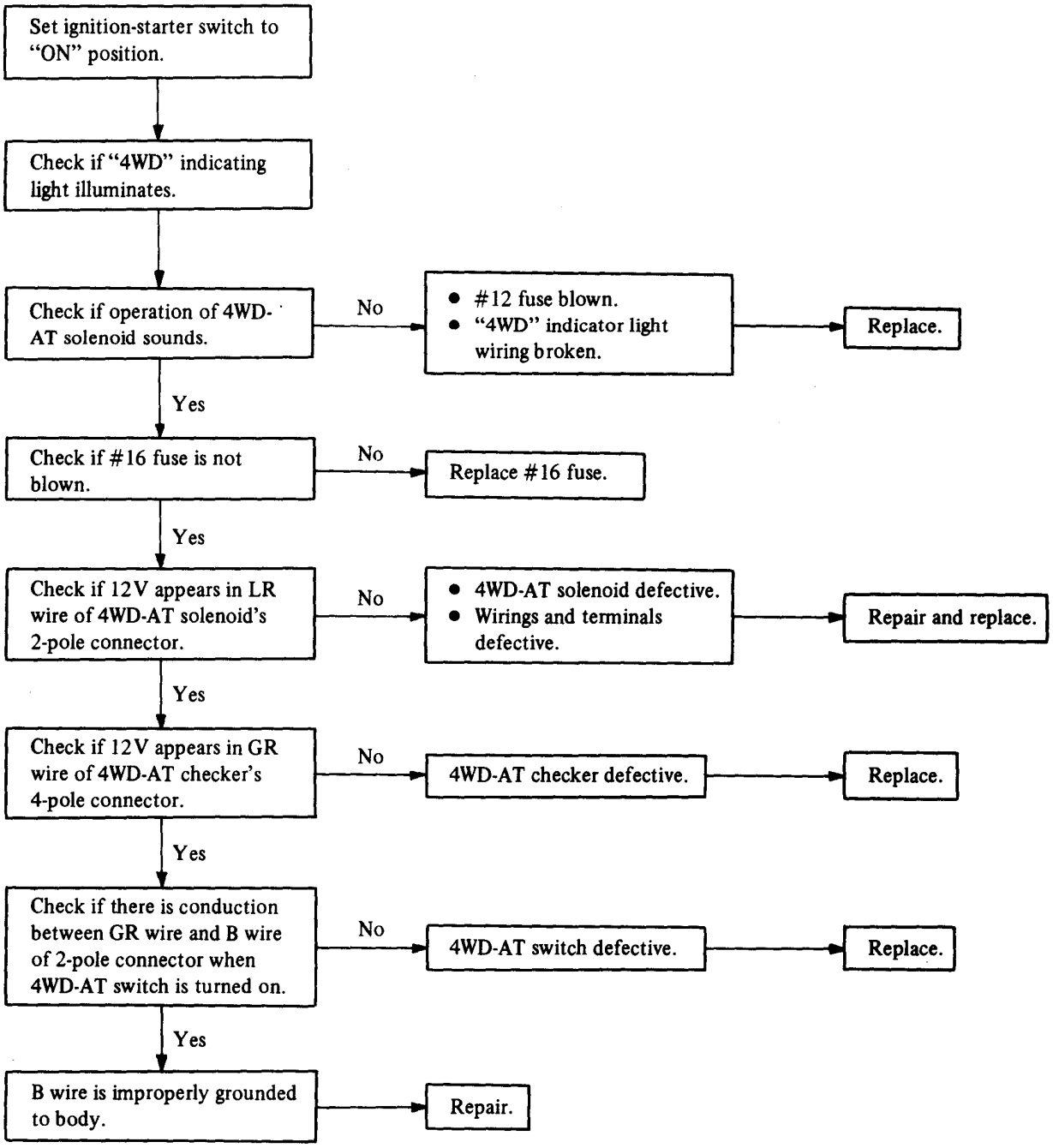

Downloaded from www.Manualslib.com manuals search engine

Downloaded from www.Manualslib.com manuals search engine

1) Windshield Wiper

a. Wiper will not operate (regardless of switch position)

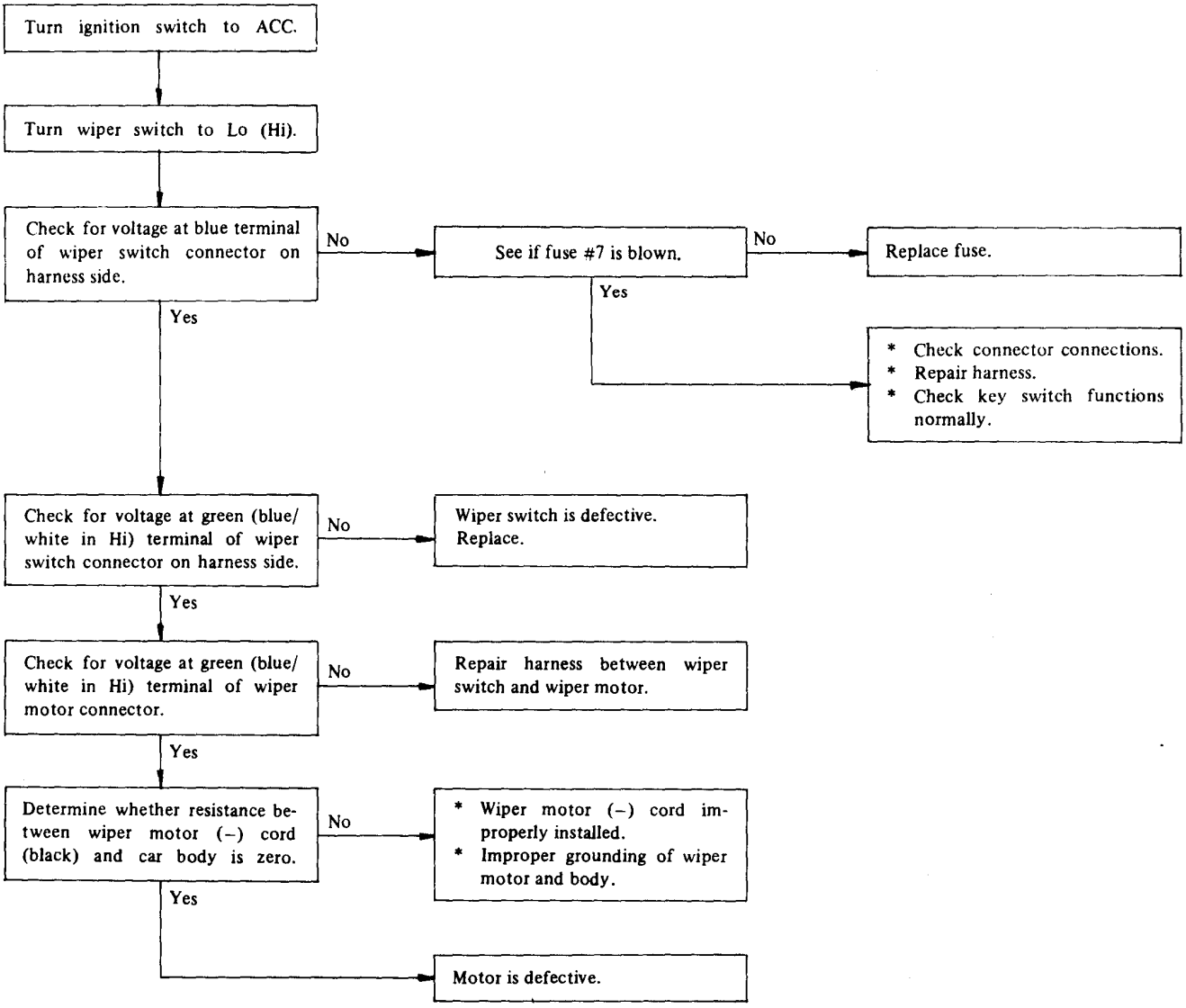

Downloaded from www.Manualslib.com manuals search engine

Downloaded from www.Manualslib.com manuals search engine

2) Intermittent Wiper (GL model)

a. Wiper will not operate with ignition-starter switch in "ON" position when wiper switch is turned to INT.

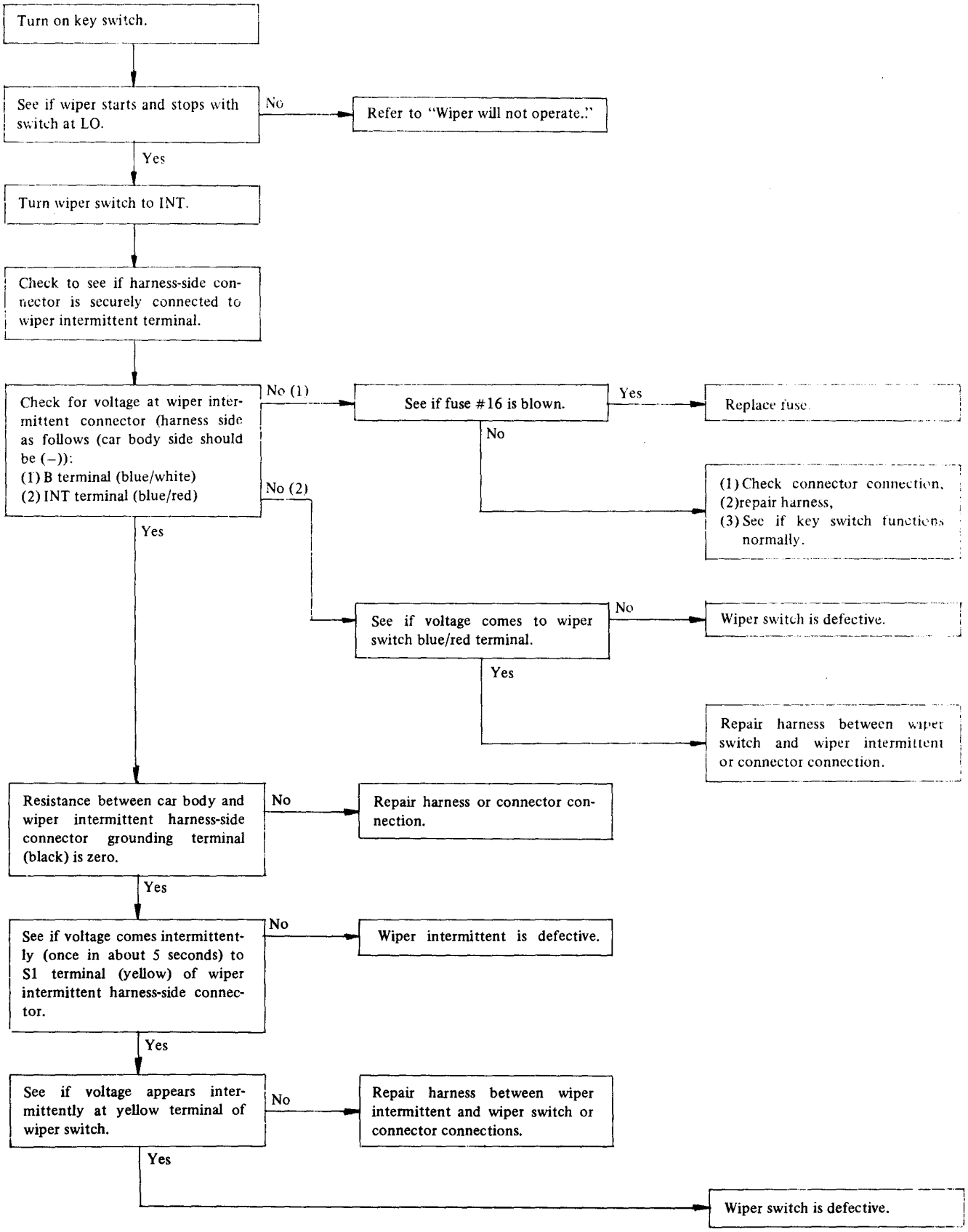

Downloaded from www.Manualslib.com manuals search engine

Downloaded from www.Manualslib.com manuals search engine

3) Windshield Washer

a. Water does not come out with washer switch turned on.

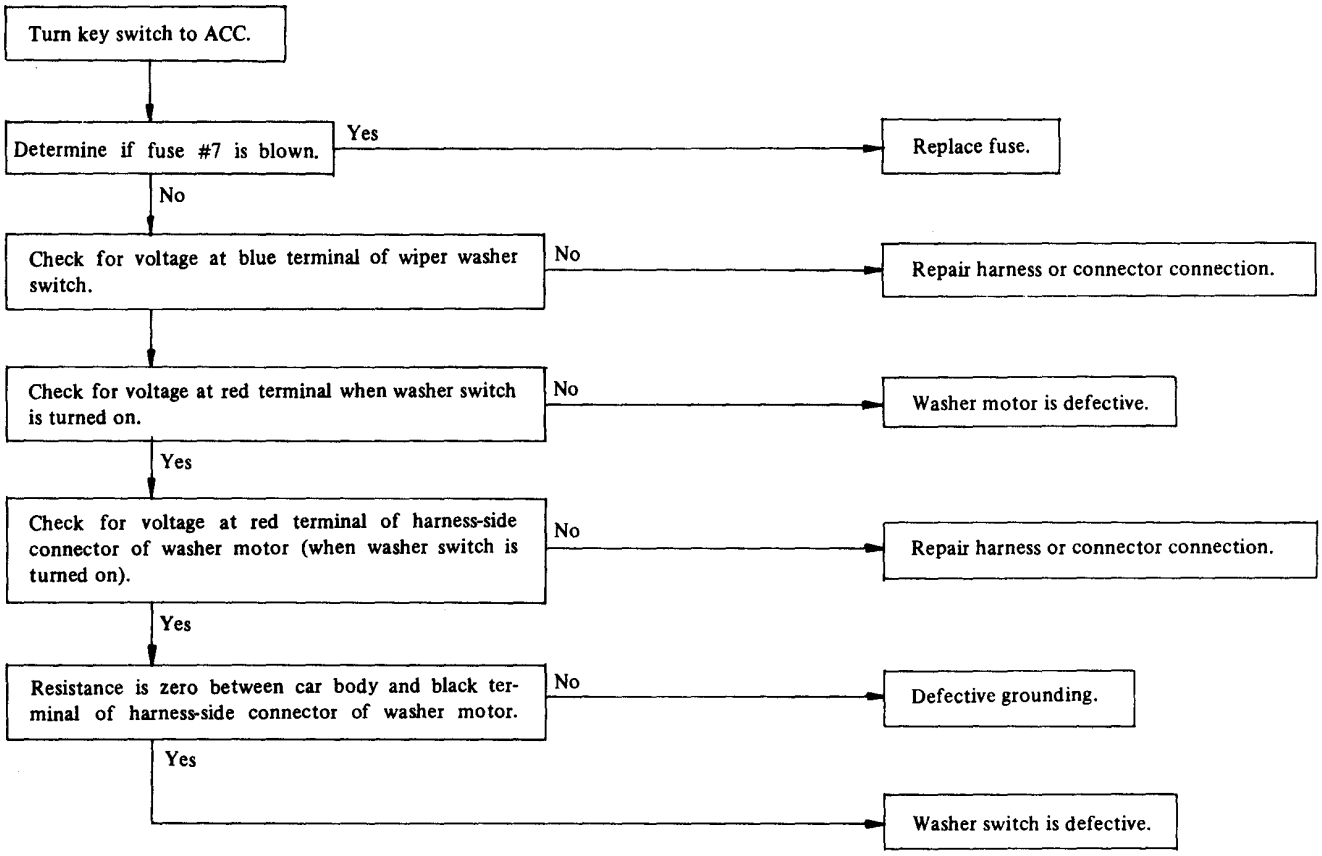

b. Wiper will not operate when washer switch is turned on (When washer and wiper are interlocked)

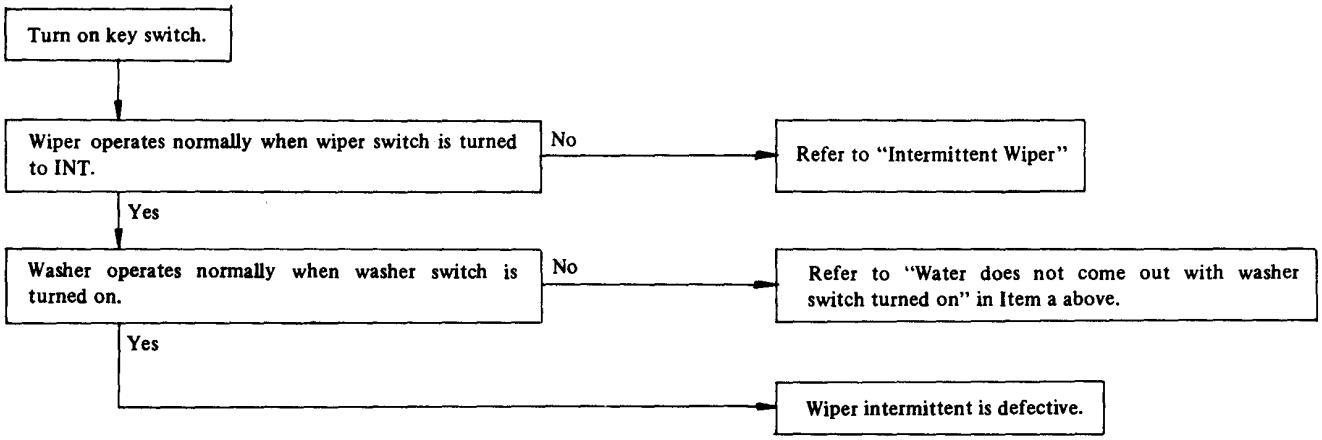

Downloaded from www.Manualslib.com manuals search engine

Downloaded from www.Manualslib.com manuals search engine

1) Rear Window Wiper

(1) Wiper will not operate.

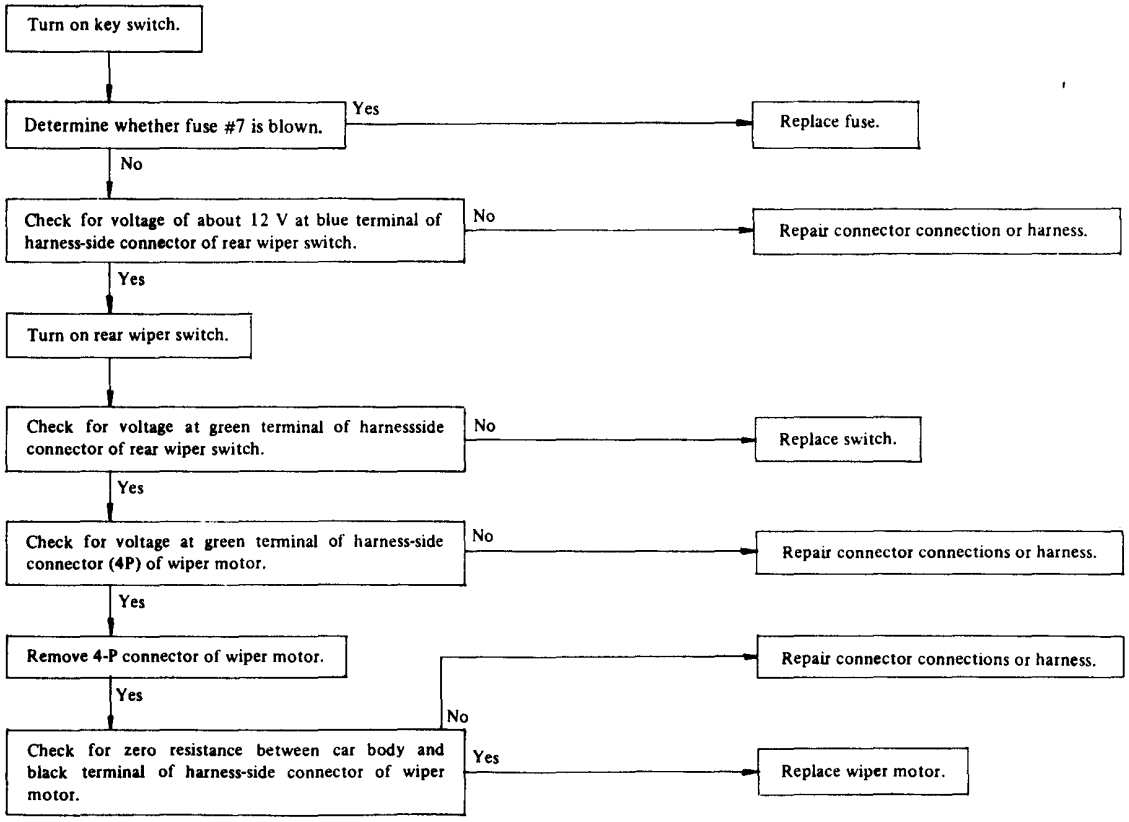

(2) Wiper will not stop automatically

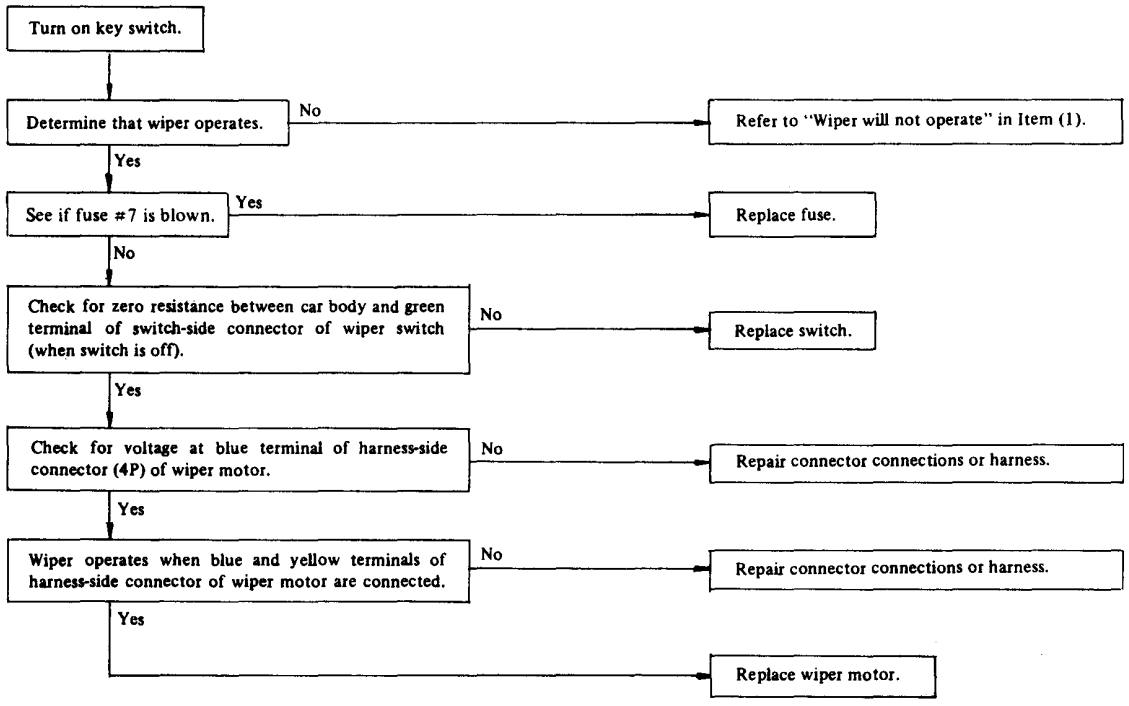

Downloaded from www.Manualslib.com manuals search engine

Downloaded from www.Manualslib.com manuals search engine

13. Radio

- AM/FM stereo radio

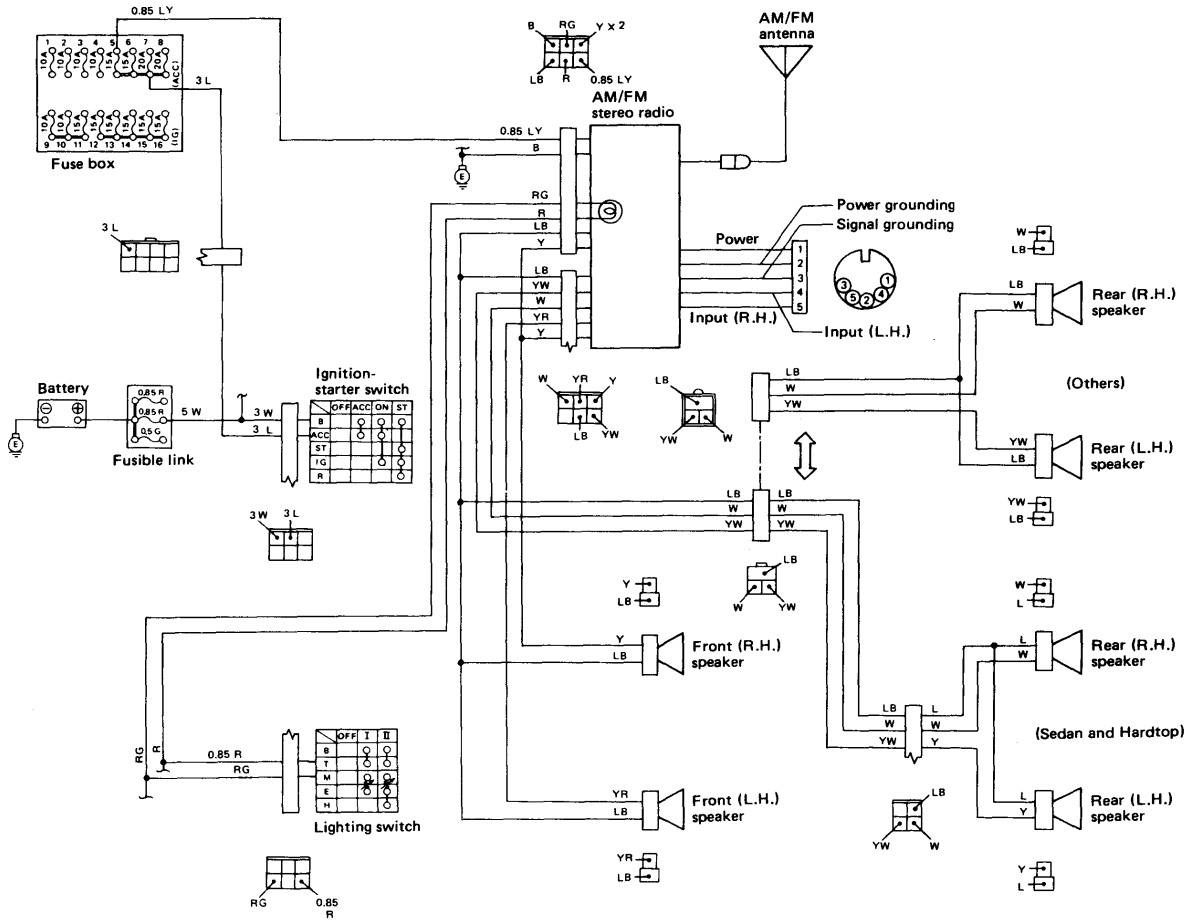

Fig. 15-313

A25-752

Downloaded from www.Manualslib.com manuals search engine

Downloaded from www.Manualslib.com manuals search engine

a. Low sensitivity

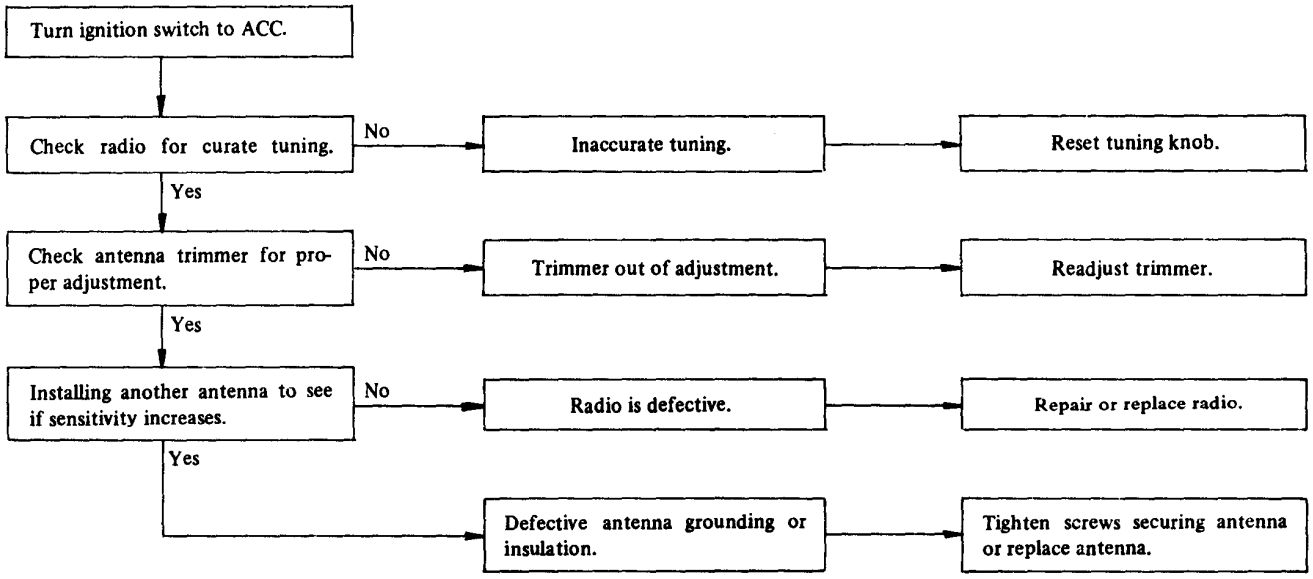

b. Noisy reception

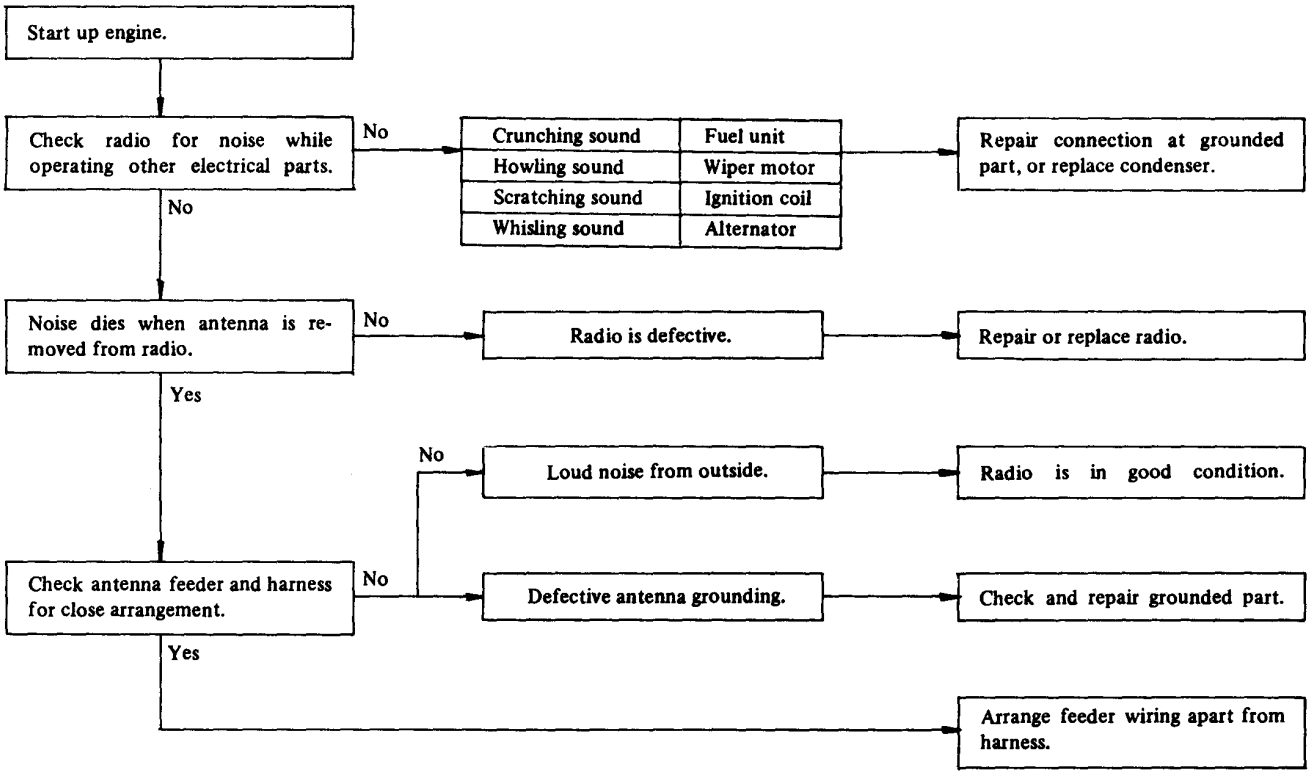

Downloaded from www.Manualslib.com manuals search engine

Downloaded from www.Manualslib.com manuals search engine

2) Horn

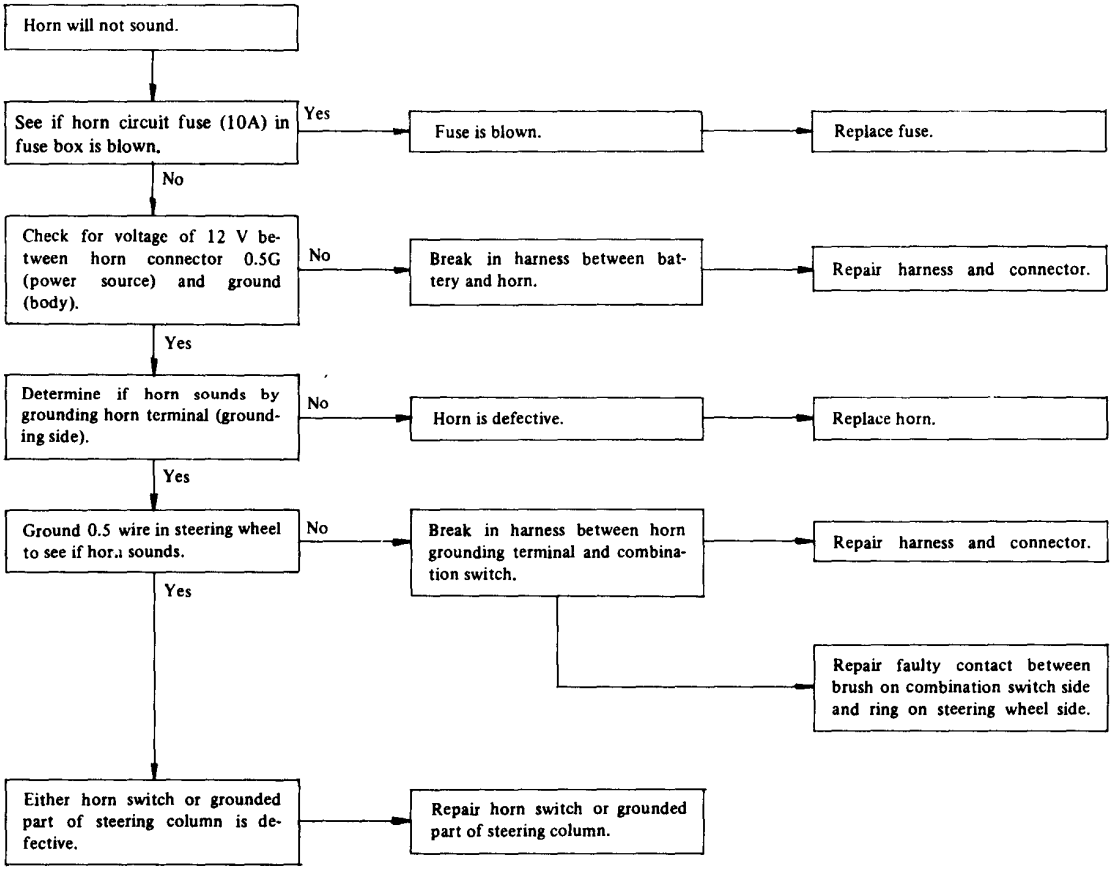

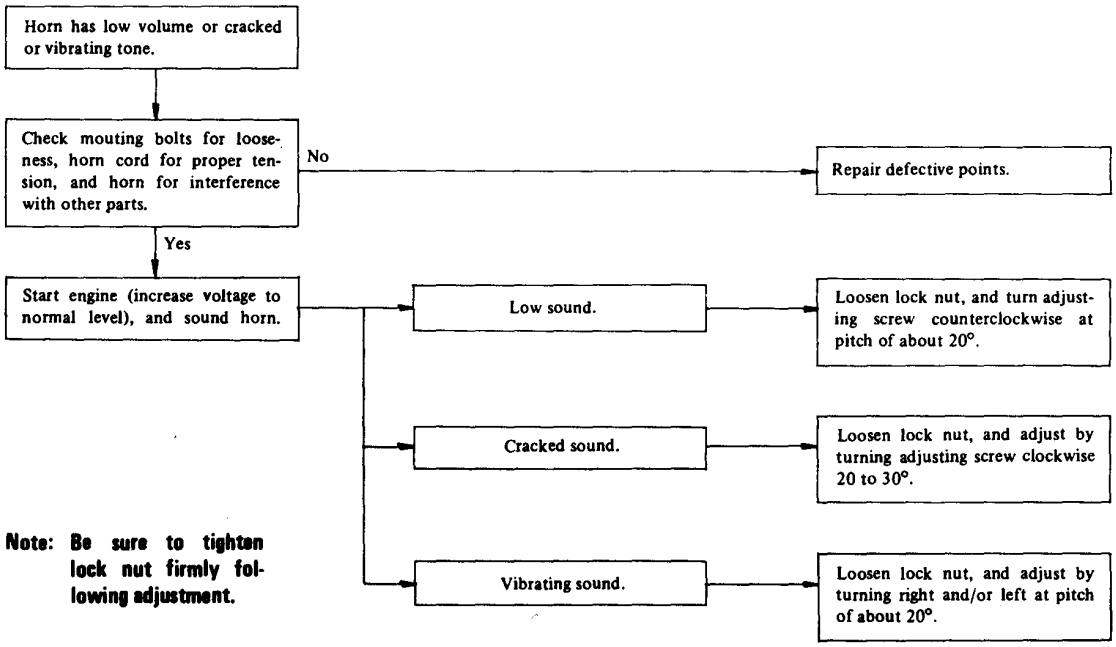

Note: Be sure to tighten lock nut firmly following adjustment.

Downloaded from www.Manualslib.com manuals search engine

Downloaded from www.Manualslib.com manuals search engine

a. Defogger does not clear windowpane

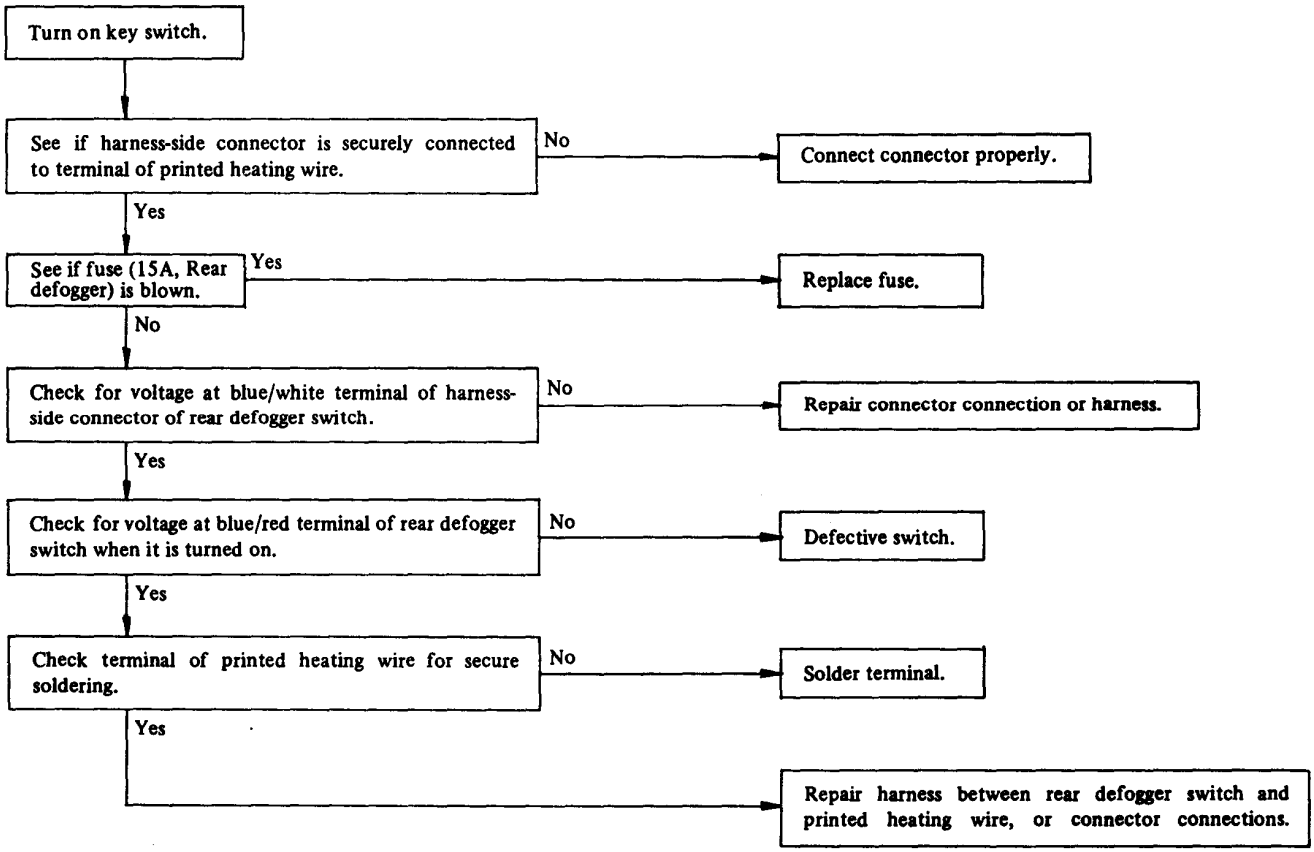

b. Switch lamp does not light when defogger switch is turned on

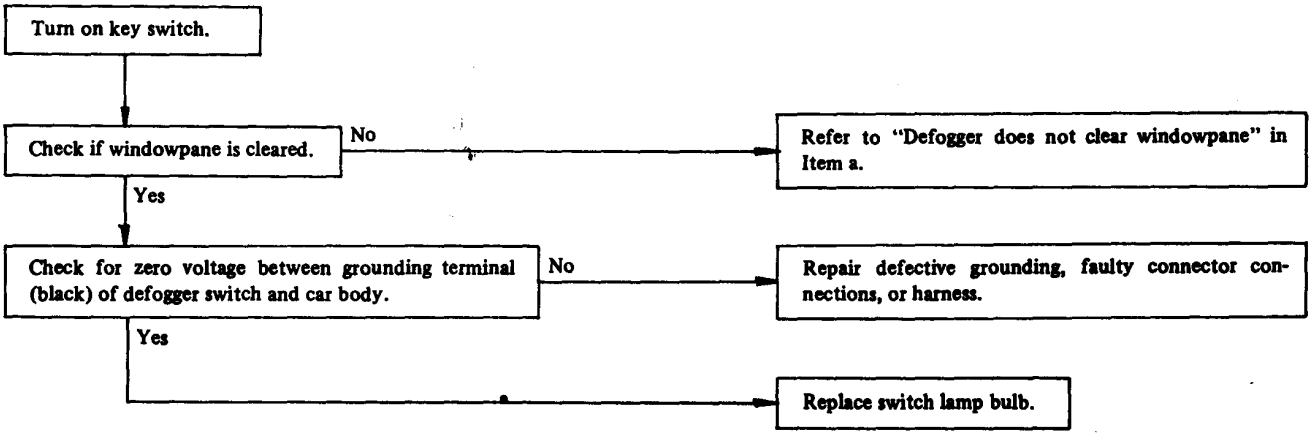

Downloaded from www.Manualslib.com manuals search engine

Downloaded from www.Manualslib.com manuals search engine

(1) All motors do not operate.

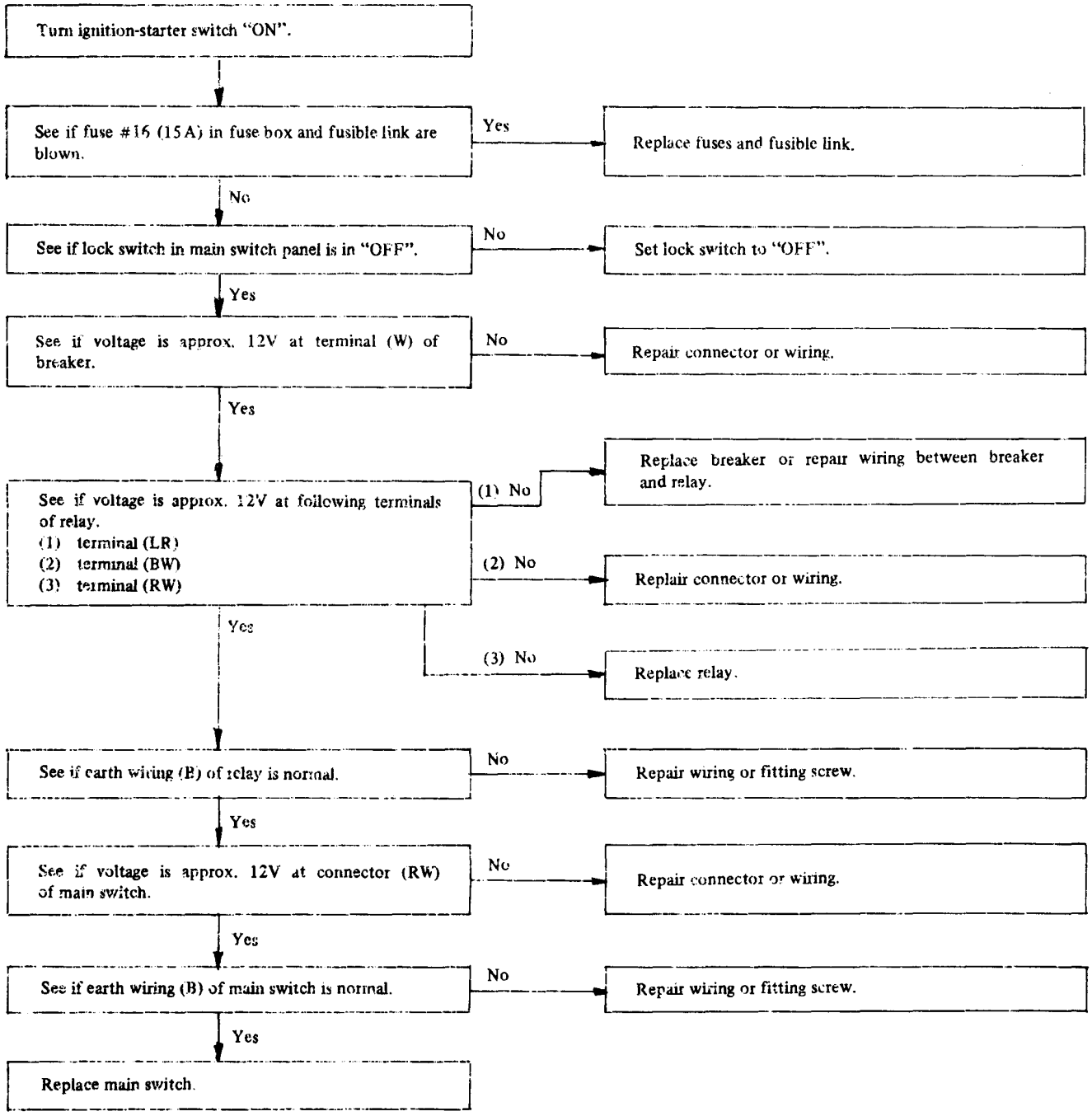

Downloaded from www.Manualslib.com manuals search engine

Downloaded from www.Manualslib.com manuals search engine

(3) Driver's window operation is defective

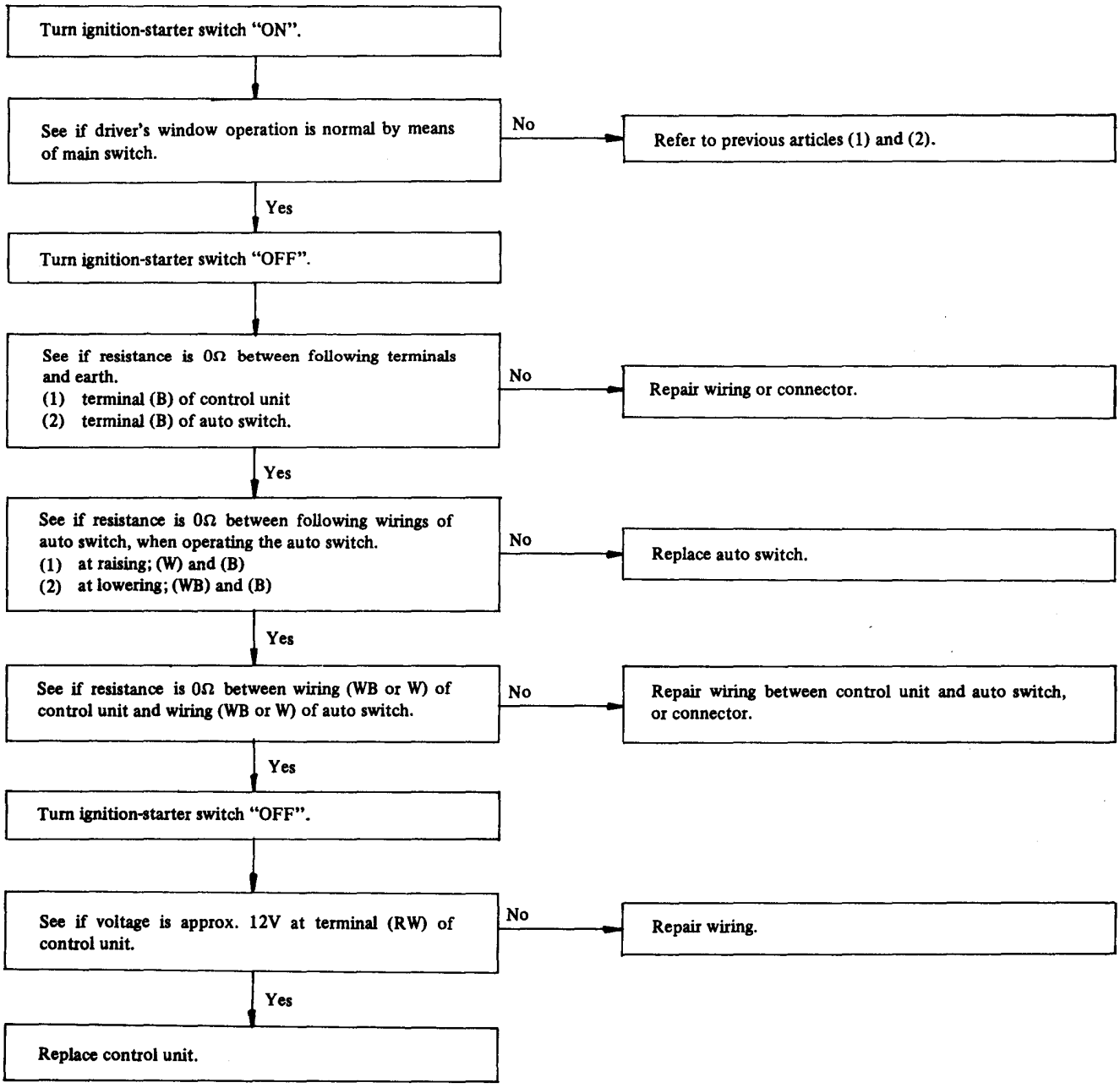

Downloaded from www.Manualslib.com manuals search engine

Downloaded from www.Manualslib.com manuals search engine

a. Cruise control will not operate (Car speed cannot be set)

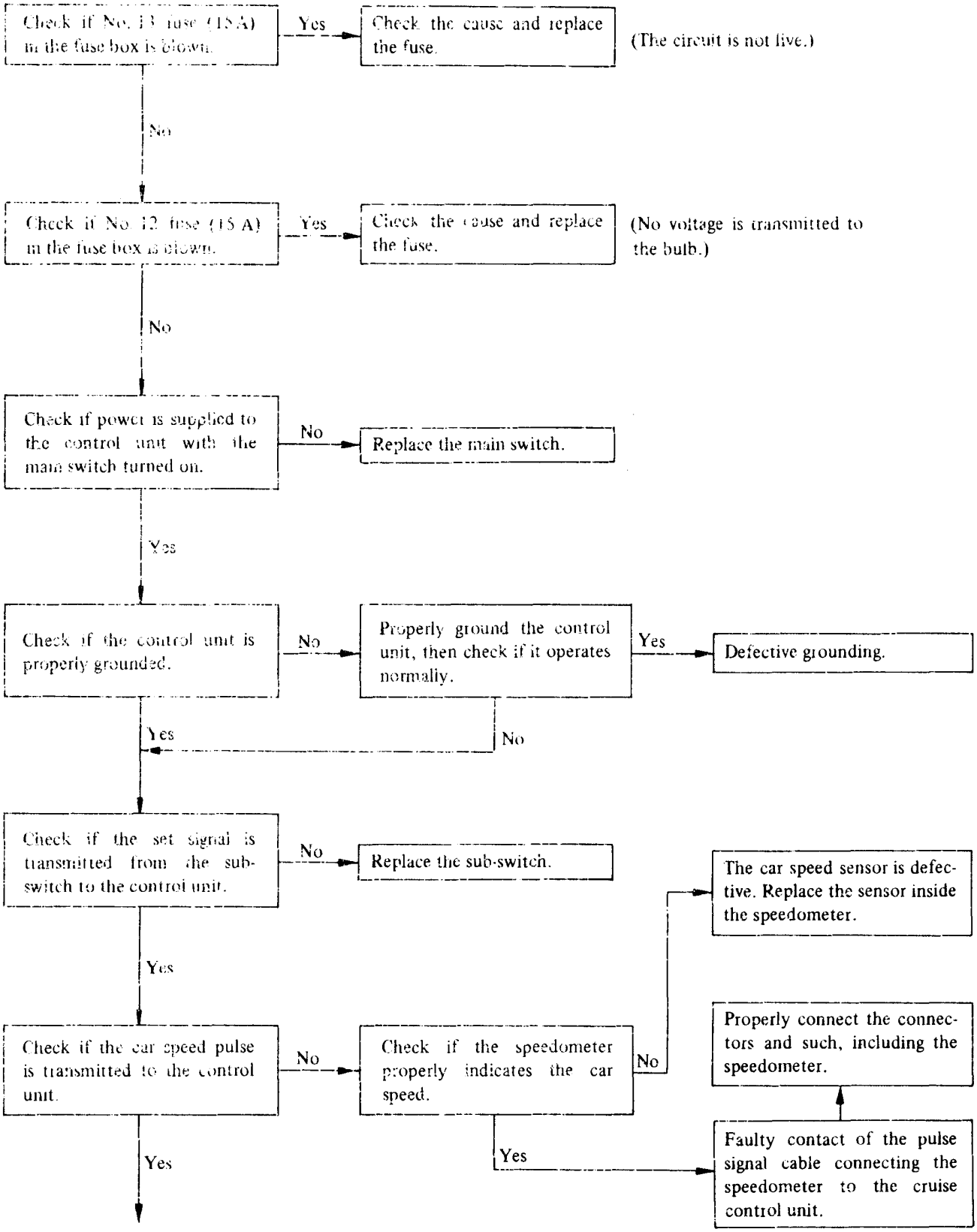

Downloaded from www.Manualslib.com manuals search engine

Downloaded from www.Manualslib.com manuals search engine

b. Resume function or coasting function will not operate.

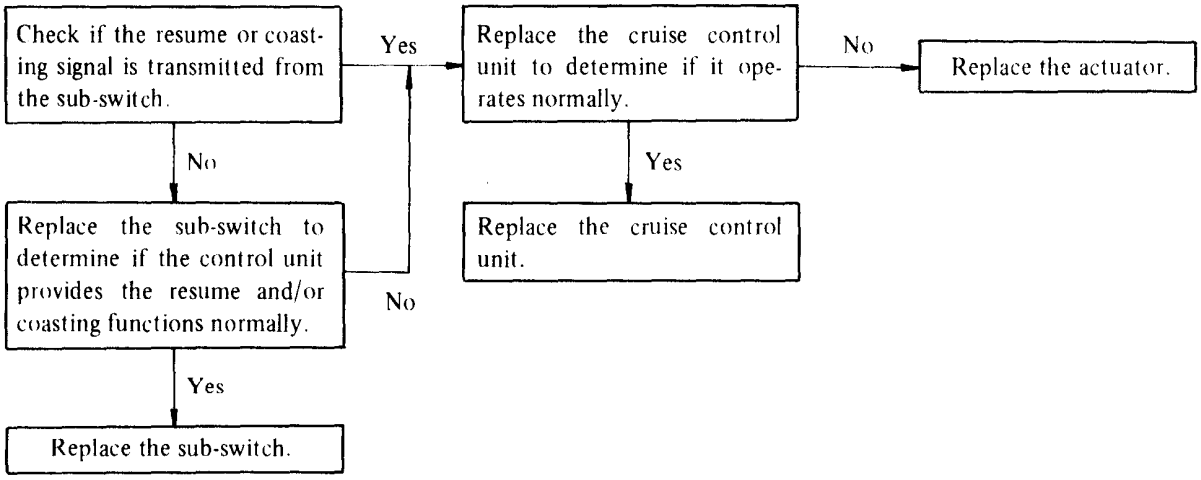

Downloaded from www.Manualslib.com manuals search engine

Downloaded from www.Manualslib.com manuals search engine

18. Remote Controlled Rearview Mirror (Option)

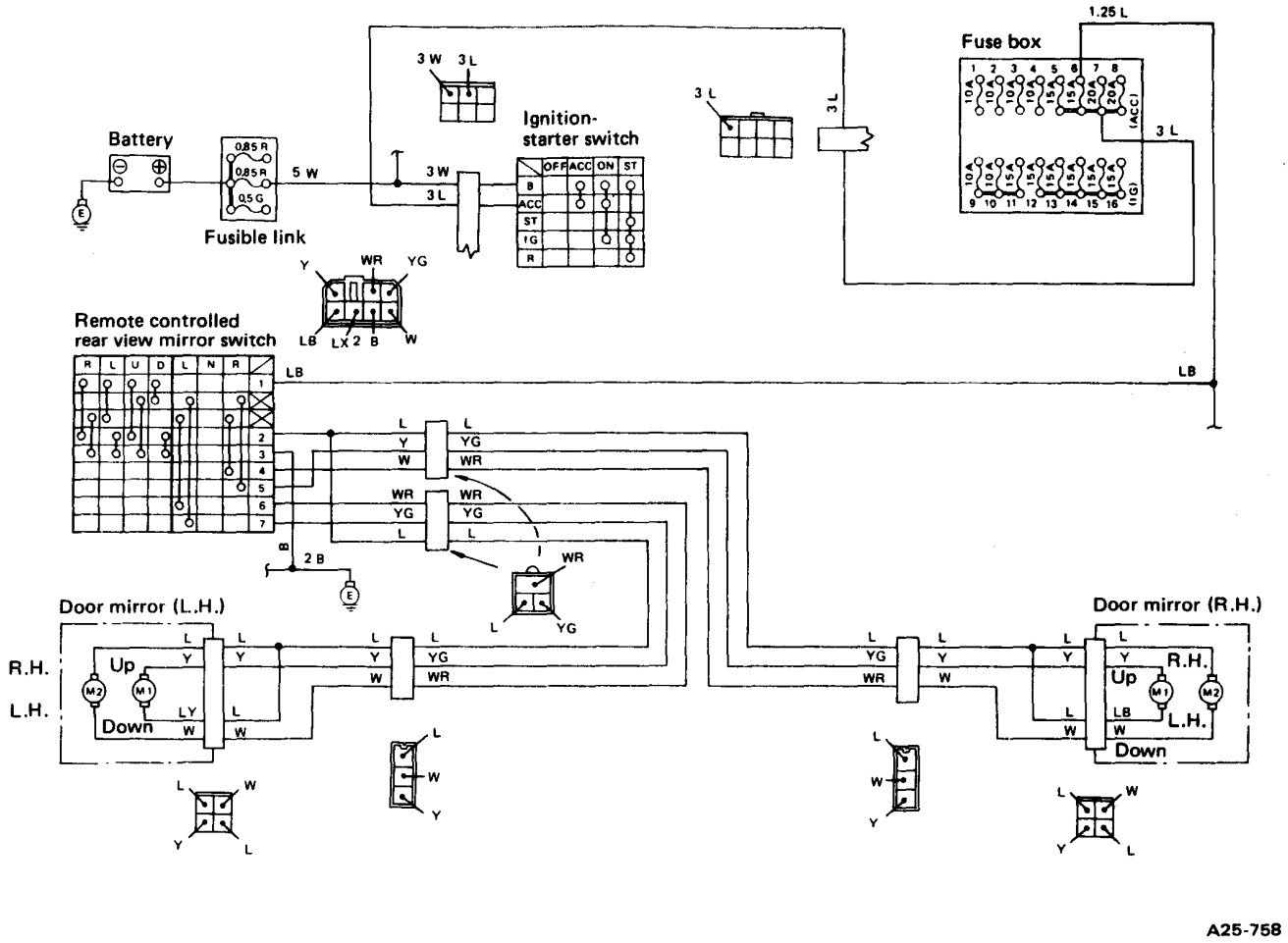

Fig. 15-319

Downloaded from www.Manualslib.com manuals search engine

Downloaded from www.Manualslib.com manuals search engine