ON-CAR SERVICES 2-2

Page

1. Foreword
2. Ignition Timing
3. Engine Idle Speed
4. Engine Compression 2
5. Intake Manifold Vacuum 3
6. Engine Oil Pressure

- The descriptions in this section apply to the turbo model.

GETtheMANUALS.org

4. Engine Compression

A: MEASUREMENT

1) After warming-up the engine, turn ignition switch to OFF.
2) Make sure that the battery is fully charged.
3) Remove all the spark plugs.
4) Disconnect connectors from fuel injectors.
5) Fully open throttle valve.
6) Check the starter motor for satisfactory performance and operation.

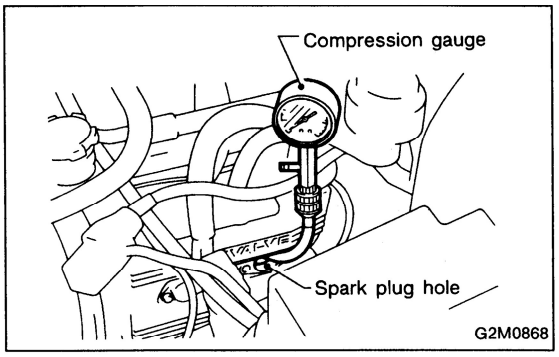

7) Hold the compression gauge tight against the spark plug hole.
8) Crank the engine by means of the starter motor, and read the maximum value on the gauge when the pointer is steady.

9) Perform at least two measurements per cylinder, and make sure that the values are correct.

Compression (200 — 300 rpm and fully open throttle):
Standard
981 — 1,177 kPa
(10.0 — 12.0 kg/cm^2, 142 — 171 psi)
Limit
834 kPa (8.5 kg/cm^2, 121 psi)
Difference between cylinders
196 kPa (2.0 kg/cm^2, 28 psi)

GETtheMANUALS.org

5. Intake Manifold Vacuum

A: MEASUREMENT

1) Warm-up the engine.
2) Disconnect the vacuum hose and install the vacuum gauge to the hose fitting on the manifold.

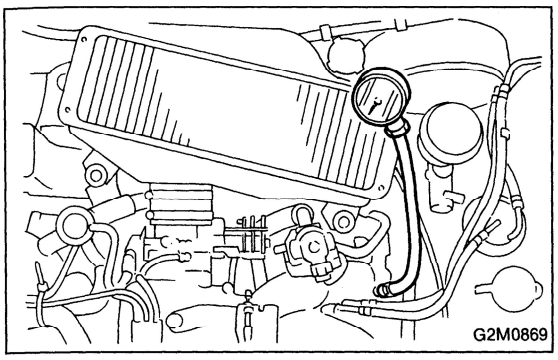

3) Keep the engine at the idle speed and read the vacuum gauge indication.
By observing the gauge needle movement, the internal condition of the engine can be diagnosed as described below.

Vacuum pressure (at idling, A/C "OFF"):
More than –60.0 kPa
(–450 mmHg, –17.72 inHg)

Diagnosis of engine condition by measurement of manifold vacuum	
Vacuum gauge indication	Possible engine condition
1. Needle is steady but lower than normal position. This tendency becomes more evident as engine temperature rises.	Leakage around intake manifold gasket or throttle chamber gasket.
2. When engine speed is reduced slowly from higher speed, needle stops temporarily when it is lowering or becomes steady above normal position.	Back pressure too high, or exhaust muffler clogged.
3. Needle intermittently drops to position lower than normal position.	Leakage around cylinder.
4. Needle drops suddenly and intermittently from normal position.	Sticky valves.
5. When engine speed is gradually increased, needle begins to vibrate rapidly at certain speed, and then vibration increases as engine speed increases.	Weak or broken valve springs.
6. Needle vibrates above and below normal position in narrow range.	Defective ignition system or throttle chamber idle adjustment.

GETtheMANUALS.org

ENGINE (DOHC) 2-3b

Page

S SPECIFICATIONS AND SERVICE DATA 2
1. Engine 2
C COMPONENT PARTS 6
1. Timing Belt 6
2. Cylinder Head and Camshaft 7
3. Cylinder Head and Valve Assembly 8
4. Cylinder Block 9
5. Crankshaft and Piston 10
W SERVICE PROCEDURE 11
1. General Precautions 11
2. Timing Belt 12
3. Camshaft 26
4. Cylinder Head 31
5. Cylinder Block 43
T DIAGNOSTICS 74
1. Engine Trouble in General 74
2. Engine Noise 77

GETtheMANUALS.org

1. Engine

A: SPECIFICATIONS

Engine	Type		Horizontally opposed, liquid cooled, 4-cylinder, 4-stroke gasoline engine
	Valve arrangement		Belt driven, double overhead camshaft, 4-valve/cylinder
	Bore x Stroke mm (in)		92 x 75 (3.62 x 2.95)
	Piston displacement cm^3 (cu in)		1,994 (121.67)
	Compression ratio		8.0
	Compression pressure (at 200 — 300 rpm) kPa (kg/cm^2, psi)		981 — 1,177 (10 — 12, 142 — 171)
	Number of piston rings		Pressure ring: 2, Oil ring: 1
	Intake valve timing	Opening	6° BTDC
		Closing	56° ABDC
	Exhaust valve timing	Opening	55° BBDC
		Closing	11° ATDC
	Idling speed [At neutral or position] rpm		900 ± 100 (No load)
	Firing order		1 → 3 → 2 → 4
	Ignition timing BTDC/rpm		18° ± 10°/900

GETtheMANUALS.org

B: SERVICE DATA

Belt tension adjuster	Protrusion of adjuster rod			15.4 — 16.4 mm	(0.606 — 0.646 in)
Belt tensioner	Spacer O.D.			16 mm	(0.63 in)
	Tensioner bush I.D.			16.16 mm	(0.6362 in)
	Clearance between spacer and bush		STD	0.117 — 0.180 mm	(0.0046 — 0.0071 in)
			Limit	0.230 mm	(0.0091 in)
	Side clearance of spacer		STD	0.37 — 0.54 mm	(0.0146 — 0.0213 in)
			Limit	0.8 mm	(0.031 in)
Camshaft	Bend limit			0.20 mm	(0.0079 in)
	Thrust clearance		STD	0.015 — 0.070 mm	(0.0006 — 0.0028 in)
			Limit	0.10 mm	(0.0039 in)
	Cam lobe height	Intake	STD	41.78 — 41.88 mm	(1.6449 — 1.6488 in)
			Limit	41.62 mm	(1.6386 in)
		Exhaust	STD	41.78 — 41.88 mm	(1.6449 — 1.6488 in)
			Limit	41.62 mm	(1.6386 in)
	Journal O.D.	STD	Front	31.946 — 31.963 mm	(1.2577 — 1.2584 in)
			Center rear	27.946 — 27.963 mm	(1.1002 — 1.1009 in)
	Oil clearance		STD	0.037 — 0.072 mm	(0.0015 — 0.0028 in)
			Limit	0.10 mm	(0.0039 in)
Cylinder head	Surface warpage limit			0.05 mm	(0.0020 in)
	Surface grinding limit			0.3 mm	(0.012 in)
	Standard height			127.5 mm	(5.02 in)
Valve seat	Refacing angle			90°	
	Contacting width	Intake	STD	1.0 mm	(0.039 in)
			Limit	1.7 mm	(0.067 in)
		Exhaust	STD	1.5 mm	(0.059 in)
			Limit	2.2 mm	(0.087 in)
Valve guide	Inner diameter			6.000 — 6.015 mm	(0.2362 — 0.2368 in)
	Protrusion above head			12.0 — 12.4 mm	(0.472 — 0.488 in)
Valve	Head edge thickness	Intake	STD	1.2 mm	(0.047 in)
			Limit	0.8 mm	(0.031 in)
		Exhaust	STD	1.5 mm	(0.059 in)
			Limit	0.8 mm	(0.031 in)
	Stem diameter		Intake	5.950 — 5.965 mm	(0.2343 — 0.2348 in)
			Exhaust	5.950 — 5.965 mm	(0.2343 — 0.2348 in)
	Stem oil clearance	STD	Intake	0.035 — 0.062 mm	(0.0014 — 0.0024 in)
			Exhaust	0.040 — 0.067 mm	(0.0016 — 0.0026 in)
		Limit		0.15 mm	(0.0059 in)
	Overall length		Intake	93.3 mm	(3.673 in)
			Exhaust	93.6 mm	(3.685 in)

STD: Standard I.D.: Inner diameter O.D.: Outer diameter

GETtheMANUALS.org

Valve spring	Free length			39.8 mm	(1.567 in)
	Squareness			2.5°, 1.7 mm	(0.067 in)
	Tension/spring height		Set	228.5 — 261.8 N (23.3 — 26.7 kg, 51.4 — 58.9 lb)/31 mm (1.22 in)	
			Lift	462.9 — 531.5 N (47.2 — 54.2 kg, 104.1 — 119.5 lb)/ 23.2 mm (0.913 in)	
Cylinder block	Surface warpage limit (mating with cylinder head)			0.05 mm	(0.0020 in)
	Surface grinding limit			0.1 mm	(0.004 in)
	Cylinder bore		A	92.005 — 92.015 mm	(3.6222 — 3.6226 in)
			B	91.995 — 92.005 mm	(3.6218 — 3.6222 in)
	Taper		STD	0.015 mm	(0.0006 in)
			Limit	0.050 mm	(0.0020 in)
	Out-of-roundness		STD	0.010 mm	(0.0004 in)
			Limit	0.050 mm	(0.0020 in)
	Piston clearance		STD	0.010 — 0.030 mm	(0.0004 — 0.0012 in)
			Limit	0.060 mm	(0.0024 in)
	Enlarging (boring) limit			0.5 mm	(0.020 in)
Piston	Outer diameter	STD	A	91.985 — 91.995 mm	(3.6214 — 3.6218 in)
			B	91.975 — 91.985 mm	(3.6211 — 3.6214 in)
		0.25 mm (0.0098 in) OS		92.225 — 92.235 mm	(3.6309 — 3.6313 in)
		0.50 mm (0.0197 in) OS		92.475 — 92.485 mm	(3.6407 — 3.6411 in)
	Standard inner diameter of piston pin hole			23.000 — 23.006 mm	(0.9055 — 0.9057 in)
Piston pin	Outer diameter			22.994 — 23.000 mm	(0.9053 — 0.9055 in)
	Standard clearance between piston pin and hole in piston			0.001 — 0.013 mm	(0.00004 — 0.00051 in)
	Degree of fit			Piston pin must be fitted into position with thumb at 20°C (68°F).	
Piston ring	Piston ring gap	Top ring	STD	0.20 — 0.26 mm	(0.0079 — 0.0102 in)
			Limit	0.5 mm	(0.020 in)
		Second ring	STD	0.37 — 0.52 mm	(0.0146 — 0.0205 in)
			Limit	1.0 mm	(0.039 in)
		Oil ring	STD	0.20 — 0.70 mm	(0.0079 — 0.0276 in)
			Limit	1.5 mm	(0.059 in)
	Clearance between piston ring and piston ring groove	Top ring	STD	0.040 — 0.080mm	(0.0016 — 0.0031 in)
			Limit	0.15 mm	(0.0059 in)
		Second ring	STD	0.030 — 0.070 mm	(0.0012 — 0.0028 in)
			Limit	0.15 mm	(0.0059 in)
Connecting rod	Bend twist per 100 mm (3.94 in) in length		Limit	0.10 mm	(0.0039 in)
	Side clearance		STD	0.070 — 0.330 mm	(0.0028 — 0.0130 in)
			Limit	0.4 mm	(0.016 in)

STD: Standard OS: Oversize

GETtheMANUALS.org

Connecting rod bearing	Oil clearance		STD	0.025 — 0.055 mm	(0.0010 — 0.0022 in)
			Limit	0.06 mm	(0.0024 in)
	Thickness at center portion	STD		1.487 — 1.496 mm	(0.0585 — 0.0589 in)
		0.03 mm (0.0012 in) US		1.505 — 1.508 mm	(0.0593 — 0.0594 in)
		0.05 mm (0.0020 in) US		1.515 — 1.518 mm	(0.0596 — 0.0598 in)
		0.25 mm (0.0098 in) US		1.615 — 1.618 mm	(0.0636 — 0.0637 in)
Connecting rod bushing	Clearance between piston pin and bushing		STD	0 — 0.022 mm	(0 — 0.0009 in)
			Limit	0.030 mm	(0.0012 in)
Crankshaft	Bend limit			0.035 mm	(0.0014 in)
	Crankpin and crank journal	Out-of roundness		0.030 mm (0.0012 in) or less	
		Grinding limit		0.250 mm	(0.0098 in)
	Crankpin outer diameter	STD		51.984 — 52.000 mm	(2.0466 — 2.0472 in)
		0.03 mm (0.0012 in) US		51.954 — 51.970 mm	(2.0454 — 2.0461 in)
		0.05 mm (0.0020 in) US		51.934 — 51.950 mm	(2.0446 — 2.0453 in)
		0.25 mm (0.0098 in) US		51.734 — 51.750 mm	(2.0368 — 2.0374 in)
	Crank journal outer diameter	STD		59.984 — 60.000 mm	(2.3616 — 2.3622 in)
		0.03 mm (0.0012 in) US		59.954 — 59.970 mm	(2.3604 — 2.3610 in)
		0.05 mm (0.0020 in) US		59.934 — 59.950 mm	(2.3596 — 2.3602 in)
		0.25 mm (0.0098 in) US		59.734 — 59.750 mm	(2.3517 — 2.3524 in)
	Thrust clearance	STD		0.030 — 0.115 mm	(0.0012 — 0.0045 in)
		Limit		0.25 mm	(0.0098 in)
	Oil clearance	#1, #5	STD	0.010 — 0.030 mm	(0.0004 — 0.0012 in)
			Limit	0.040 mm	(0.0016 in)
		#2, #3, #4	STD	0.010 — 0.030 mm	(0.0004 — 0.0012 in)
			Limit	0.035 mm	(0.0014 in)
Crankshaft bearing	Crankshaft bearing thickness	#1, #5	STD	1.998 — 2.011 mm	(0.0787 — 0.0792 in)
			0.03 mm (0.0012 in) US	2.017 — 2.020 mm	(0.0794 — 0.0795 in)
			0.05 mm (0.0020 in) US	2.027 — 2.030 mm	(0.0798 — 0.0799 in)
			0.25 mm (0.0098 in) US	2.127 — 2.130 mm	(0.0837 — 0.0839 in)
		#2, #3, #4	STD	2.000 — 2.013 mm	(0.0787 — 0.0793 in)
			0.03 mm (0.0012 in) US	2.019 — 2.022 mm	(0.0795 — 0.0796 in)
			0.05 mm (0.0020 in) US	2.029 — 2.032 mm	(0.0799 — 0.0800 in)
			0.25 mm (0.0098 in) US	2.129 — 2.132 mm	(0.0838 — 0.0839 in)

STD: Standard US: Under size

GETtheMANUALS.org

1. Timing Belt

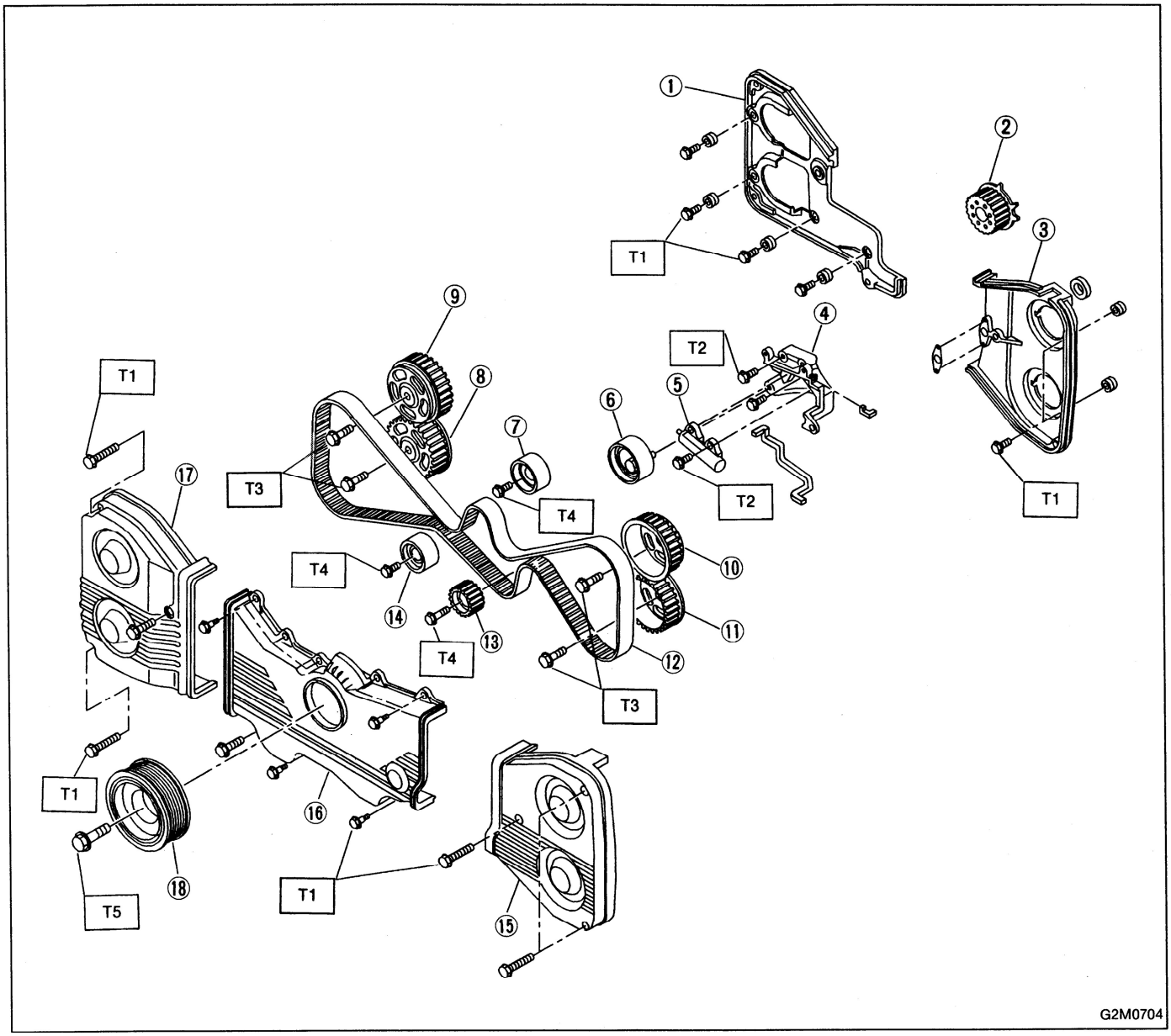

① Right-hand belt cover No. 2
② Crankshaft sprocket
③ Left-hand belt cover No. 2
④ Tensioner bracket
⑤ Tensioner adjuster
⑥ Belt tensioner
⑦ Belt idler
⑧ Right-hand exhaust camshaft sprocket
⑨ Right-hand intake camshaft sprocket
⑩ Left-hand intake camshaft sprocket
⑪ Left-hand exhaust camshaft sprocket
⑫ Timing belt
⑬ Belt idler No. 2
⑭ Belt idler
⑮ Left-hand belt cover
⑯ Front belt cover
⑰ Right-hand belt cover
⑱ Crankshaft pulley

Tightening torque: N·m (kg-m, ft-lb)
T1: 4.9 ± 0.5 (0.5 ± 0.05, 3.6 ± 0.4)
T2: 25 ± 2 (2.5 ± 0.2, 18.1 ± 1.4)
T3: 39 ± 4 (4.0 ± 0.4, 28.9 ± 2.9)
T4: 78 ± 5 (8.0 ± 0.5, 57.9 ± 3.6)
T5: 98 ± 5 (10.0 ± 0.5, 72.3 ± 3.6)

GETtheMANUALS.org

2. Cylinder Head and Camshaft

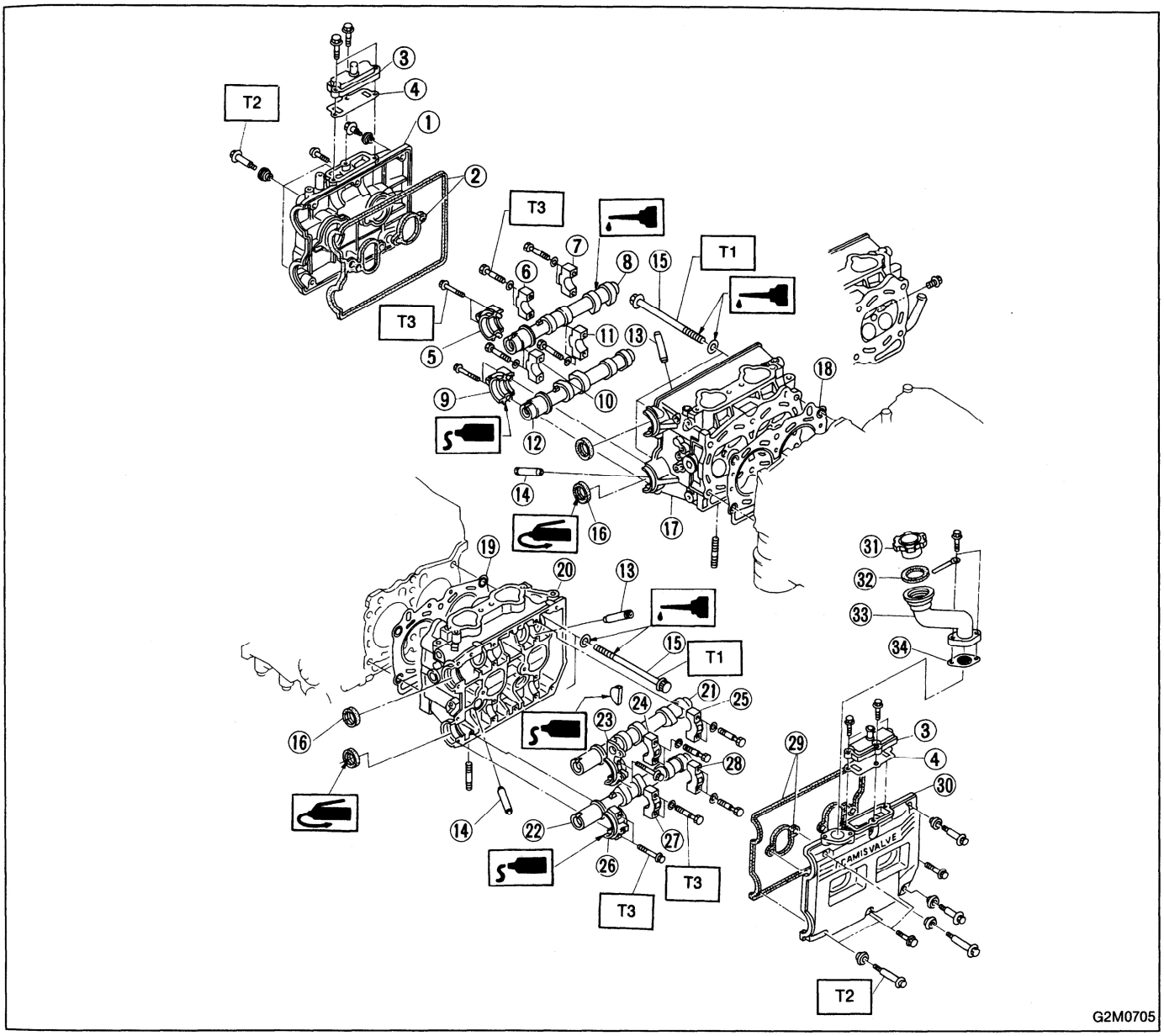

① Rocker cover (RH)
② Rocker cover gasket (RH)
③ Oil separator cover
④ Gasket
⑤ Intake camshaft cap (Front RH)
⑥ Intake camshaft cap (Center RH)
⑦ Intake camshaft cap (Rear RH)
⑧ Intake camshaft (RH)
⑨ Exhaust camshaft cap (Front RH)
⑩ Exhaust camshaft cap (Center RH)
⑪ Exhaust camshaft cap (Rear RH)
⑫ Exhaust camshaft (RH)
⑬ Intake valve guide
⑭ Exhaust valve guide
⑮ Cylinder head bolt
⑯ Oil seal
⑰ Cylinder head (RH)
⑱ Cylinder head gasket (RH)
⑲ Cylinder head gasket (LH)
⑳ Cylinder head (LH)
㉑ Intake camshaft (LH)
㉒ Exhaust camshaft (LH)
㉓ Intake camshaft cap (Front LH)
㉔ Intake camshaft cap (Center LH)
㉕ Intake camshaft cap (Rear LH)
㉖ Exhaust camshaft (Front LH)
㉗ Exhaust camshaft cap (Center LH)
㉘ Exhaust camshaft cap (Rear LH)
㉙ Rocker cover gasket (LH)
㉚ Rocker cover (LH)
㉛ Oil filler cap
㉜ Gasket
㉝ Oil filler duct
㉞ Gasket

Tightening torque: N·m (kg-m, ft-lb)
T1: Refer to [W5E1].
T2: 5 (0.5, 3.6)
T3: 10 (1.0, 7)

GETtheMANUALS.org

3. Cylinder Head and Valve Assembly

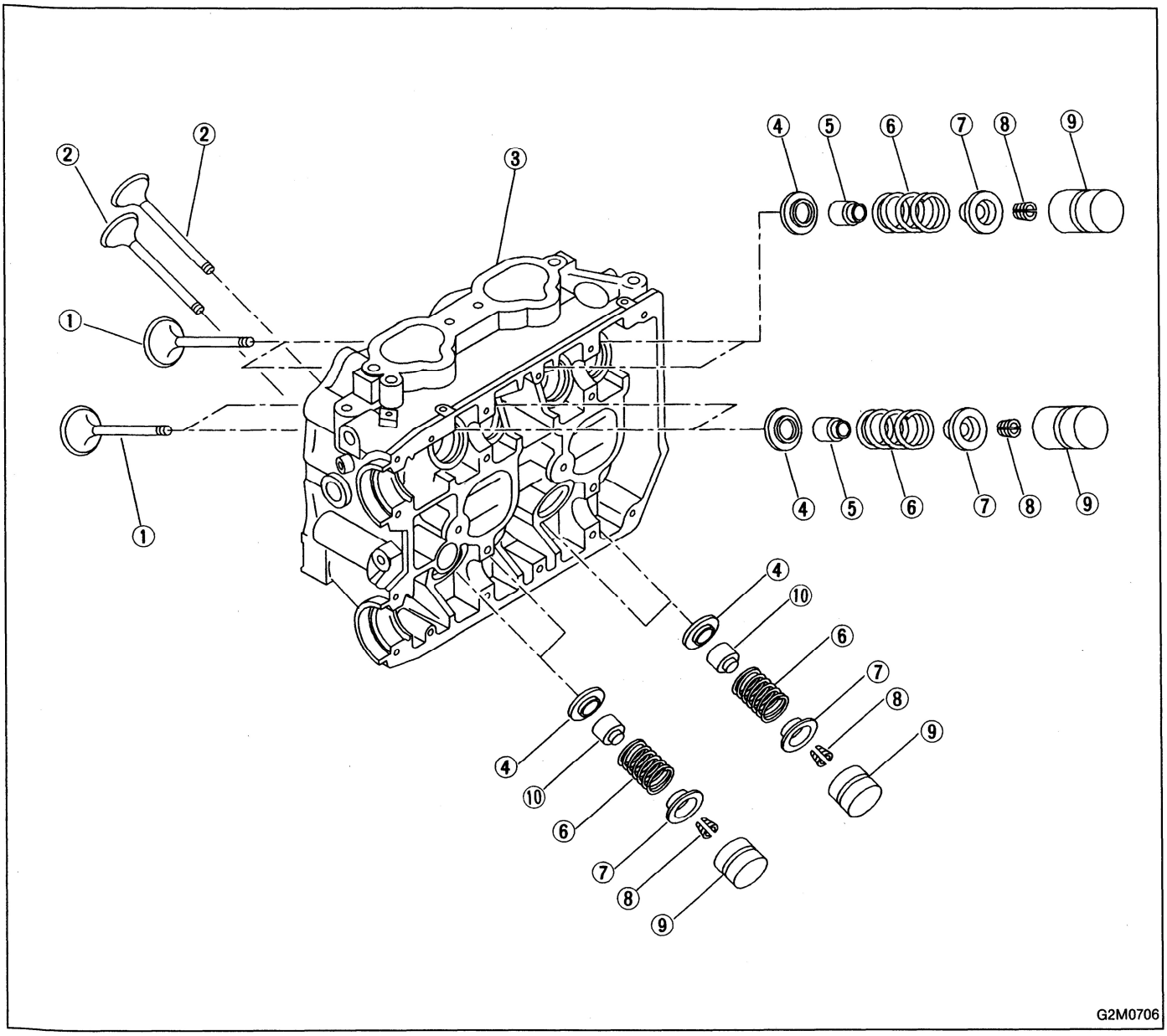

① Exhaust valve
② Intake valve
③ Cylinder head
④ Valve spring seat
⑤ Intake valve oil seal
⑥ Valve spring
⑦ Retainer
⑧ Retainer key
⑨ Hydraulic lash adjuster
⑩ Exhaust valve oil seal

Tightening torque: N·m (kg-m, ft-lb)
T1: 5 (0.5, 3.6)
T2: 12 (1.2, 9)

GETtheMANUALS.org

4. Cylinder Block

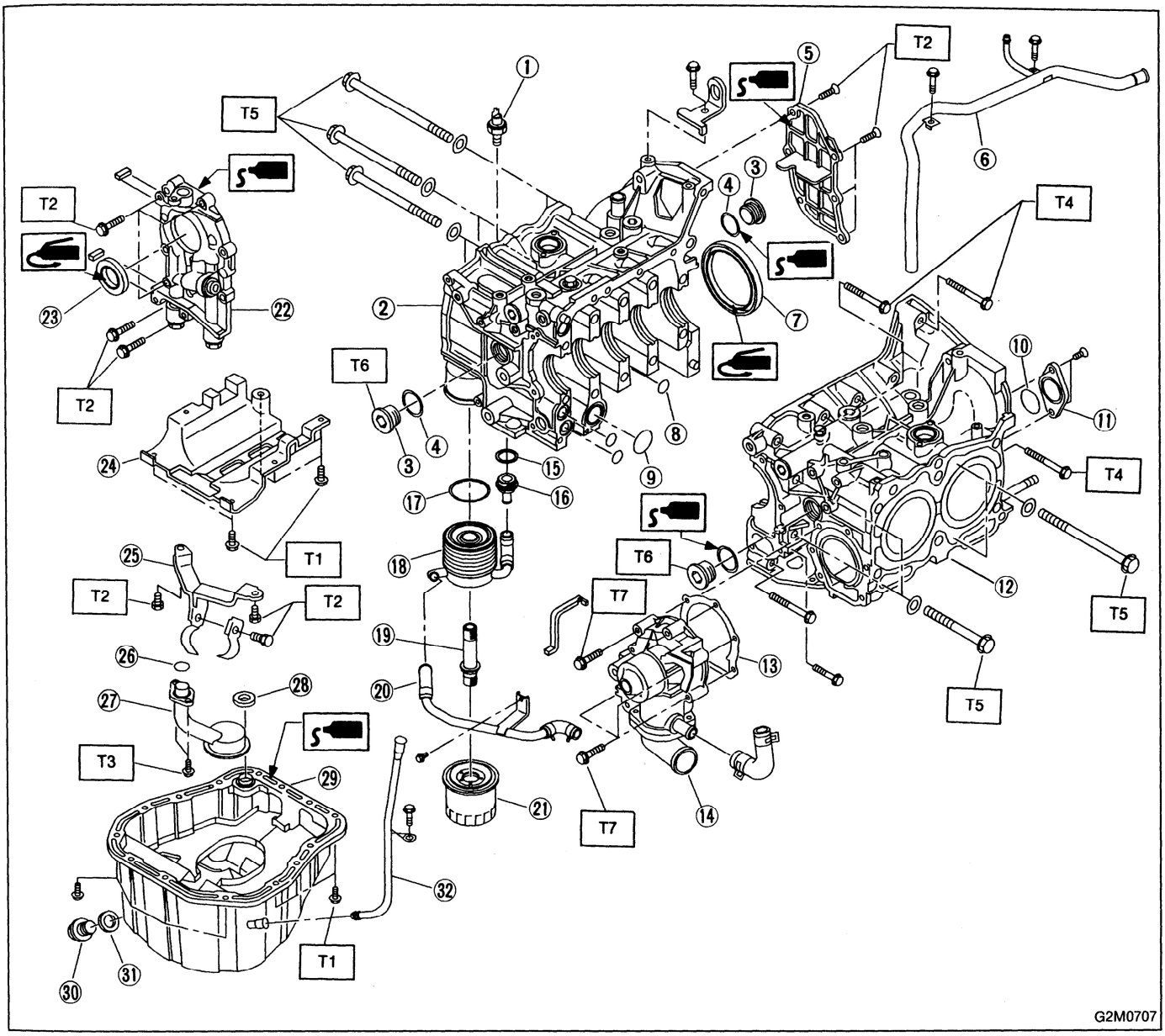

① Oil pressure switch
② Right-hand cylinder block
③ Service hole plug
④ Metal gasket
⑤ Oil separator cover
⑥ Engine coolant pipe A
⑦ Rear oil seal
⑧ O-ring
⑨ O-ring
⑩ O-ring
⑪ Service hole cover
⑫ Left-hand cylinder block
⑬ Gasket
⑭ Engine coolant pump
⑮ Metal gasket
⑯ Joint plug
⑰ O-ring
⑱ Oil cooler
⑲ Connector
⑳ Engine coolant pipe B
㉑ Oil cleaner
㉒ Oil pump
㉓ Front oil seal
㉔ Baffle plate
㉕ Oil strainer stay
㉖ O-ring
㉗ Oil strainer
㉘ Gasket
㉙ Oil pan
㉚ Oil drain plug
㉛ Metal gasket
㉜ Oil level gauge guide

Tightening torque: N·m (kg-m, ft-lb)
T1: 5 (0.5, 3.6)
T2: 6.4 (0.65, 4.7)
T3: 10 (1.0, 7)
T4: 25 ± 2 (2.5 ± 0.2, 18.1 ± 1.4)
T5: 47 ± 3 (4.8 ± 0.3, 34.7 ± 2.2)
T6: 69 ± 7 (7.0 ± 0.7, 50.6 ± 5.1)
T7: First
12 ± 2 (1.2 ± 0.2, 8.7 ± 1.4)
Second
12 ± 2 (1.2 ± 0.2, 8.7 ± 1.4)

GETtheMANUALS.org

5. Crankshaft and Piston

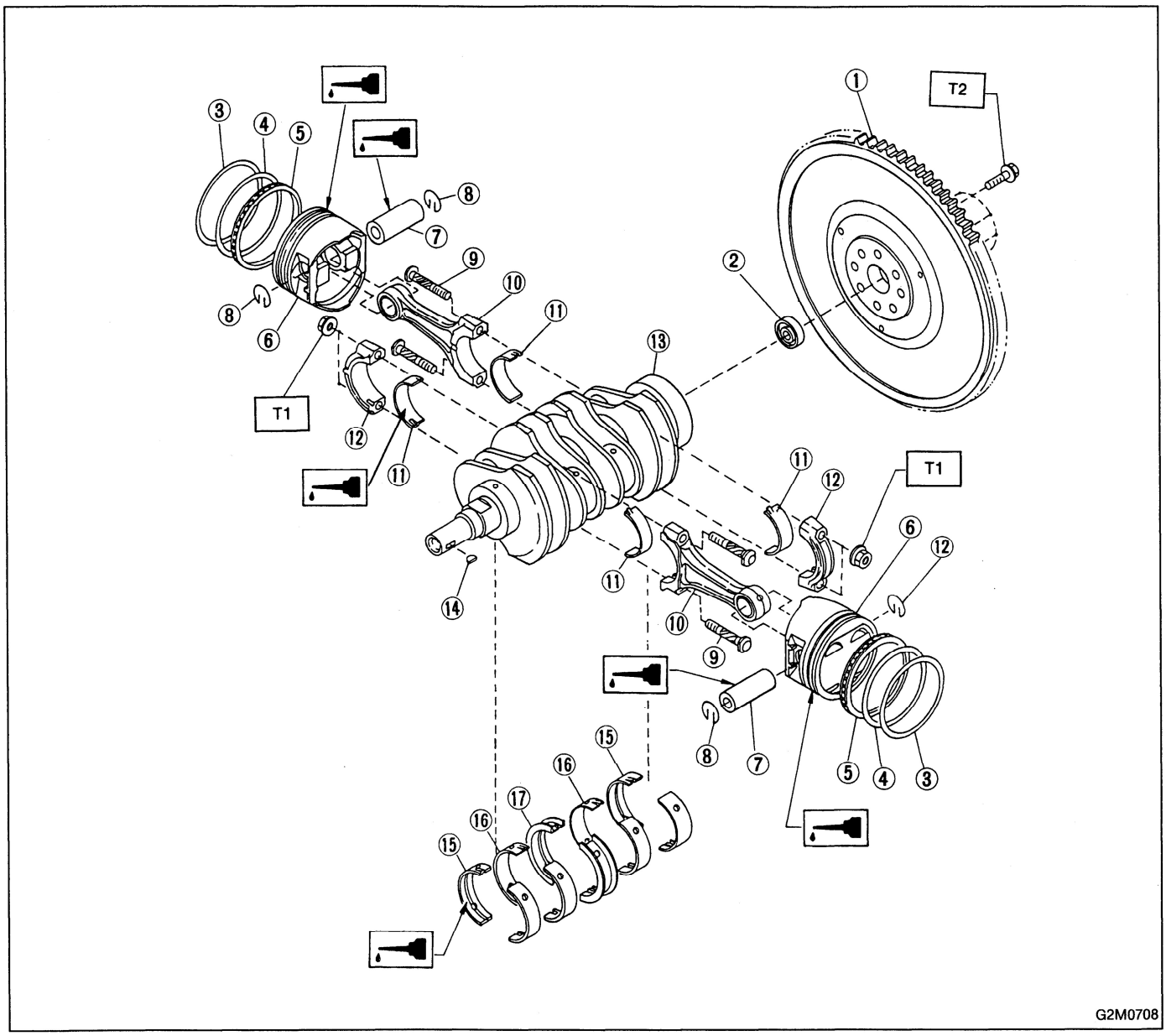

① Flywheel
② Bell bearing
③ Top ring
④ Second ring
⑤ Oil ring
⑥ Piston
⑦ Piston pin
⑧ Circlip
⑨ Connecting rod bolt
⑩ Connecting rod
⑪ Connecting rod bearing
⑫ Connecting rod cap
⑬ Crankshaft
⑭ Woodruff key
⑮ Crankshaft bearing #1, #5
⑯ Crankshaft bearing #2, #4
⑰ Crankshaft bearing #3

Tightening torque: N·m (kg-m, ft-lb)
T1: 43 — 46 (4.4 — 4.7, 32 — 34)
T2: 69 — 75 (7.0 — 7.6, 51 — 55)

GETtheMANUALS.org

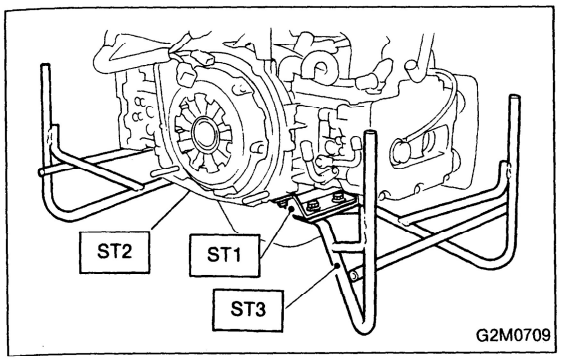

1. General Precautions

1) Before disassembling engine, place it on ST3.
ST1 498457000 ENGINE STAND ADAPTER RH
ST2 498457100 ENGINE STAND ADAPTER LH
ST3 499817000 ENGINE STAND
On turbocharged engine, remove exhaust manifolds, turbo joint pipe and turbocharger before placing it on ST3.
2) All parts should be thoroughly cleaned, paying special attention to the engine oil passages, pistons and bearings.
3) Rotating parts and sliding parts such as piston, bearing and gear should be coated with oil prior to assembly.
4) Be careful not to let oil, grease or coolant contact the timing belt, clutch disc and flywheel.
5) All removed parts, if to be reused, should be reinstalled in the original positions and directions.
6) Gaskets and lock washers must be replaced with new ones. Liquid gasket should be used where specified to prevent leakage.
7) Bolts, nuts and washers should be replaced with new ones as required.
8) Even if necessary inspections have been made in advance, proceed with assembly work while making rechecks.

GETtheMANUALS.org

2. Timing Belt

A: REMOVAL

1. CRANKSHAFT PULLEY AND BELT COVER

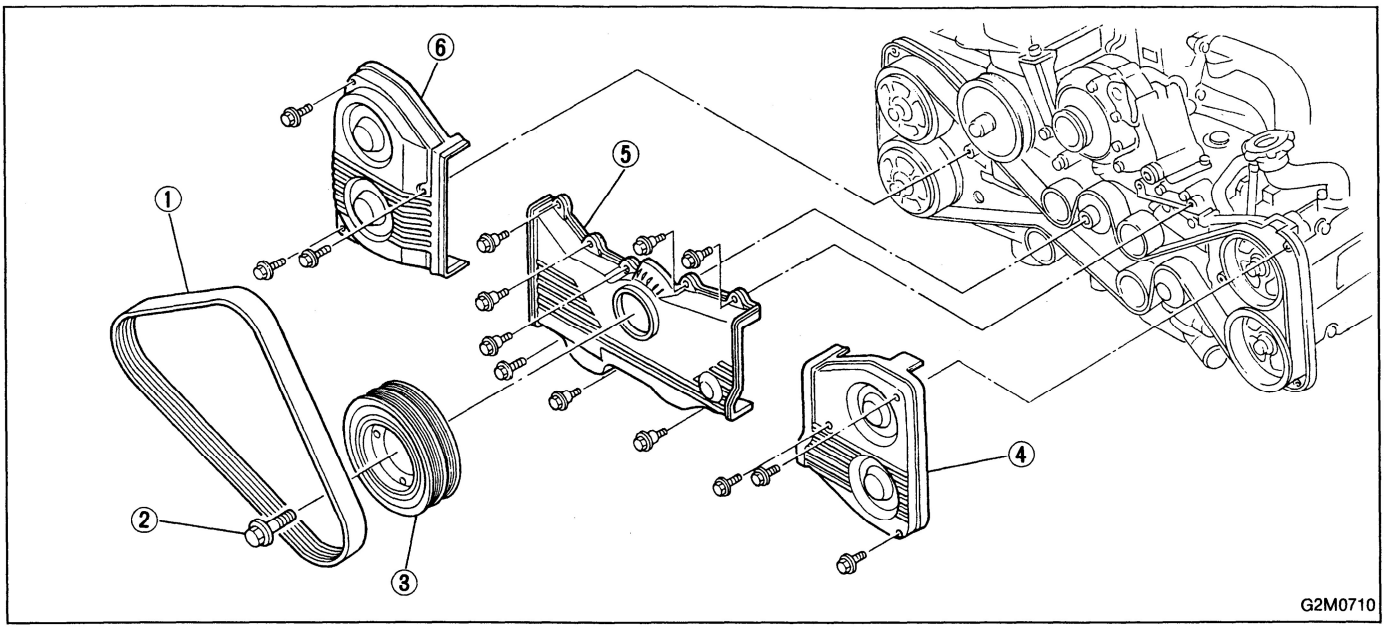

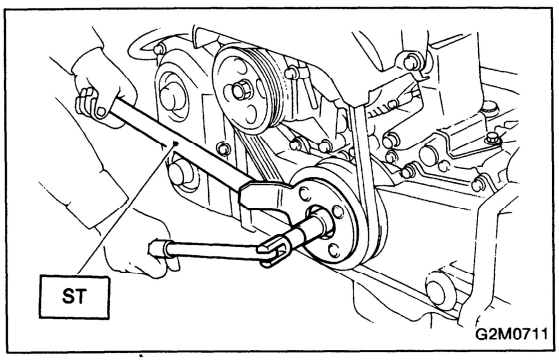

1) Remove V-belt.
2) Remove pulley bolt. To lock crankshaft, use ST.
ST 499977000 CRANKSHAFT PULLEY WRENCH
3) Remove crankshaft pulley.
4) Remove left-hand belt cover.
5) Remove right-hand belt cover.
6) Remove front belt cover.

GETtheMANUALS.org

2. TIMING BELT

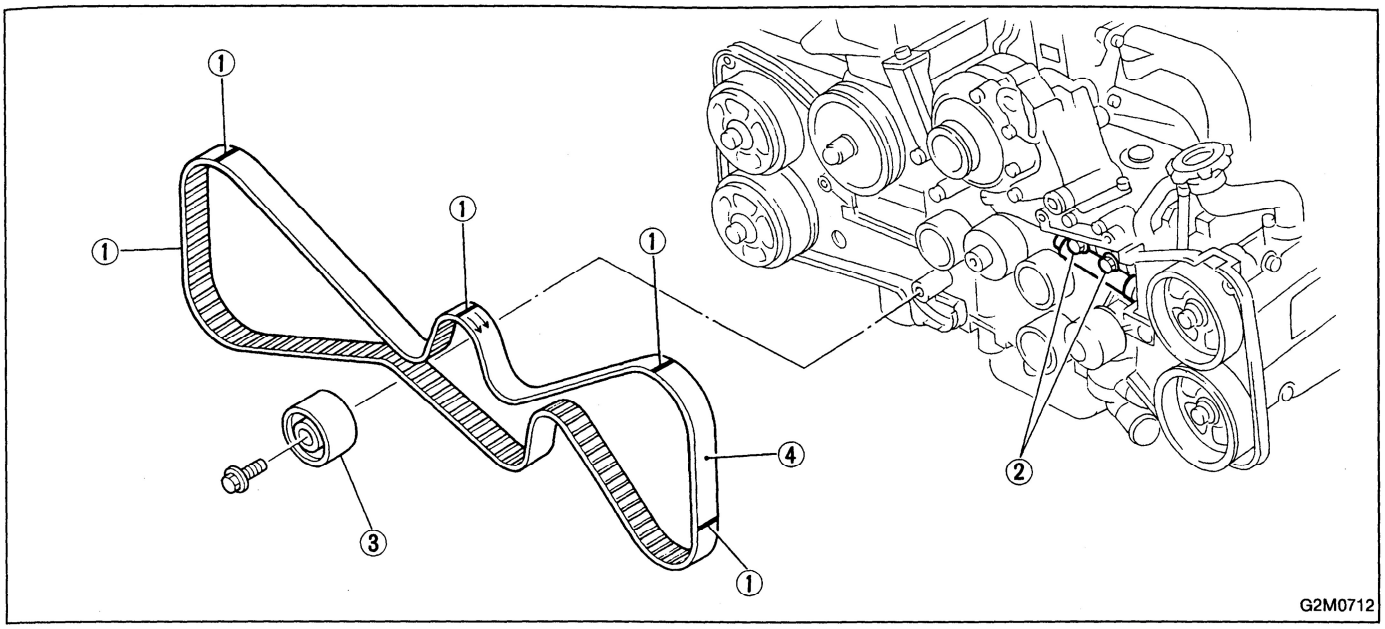

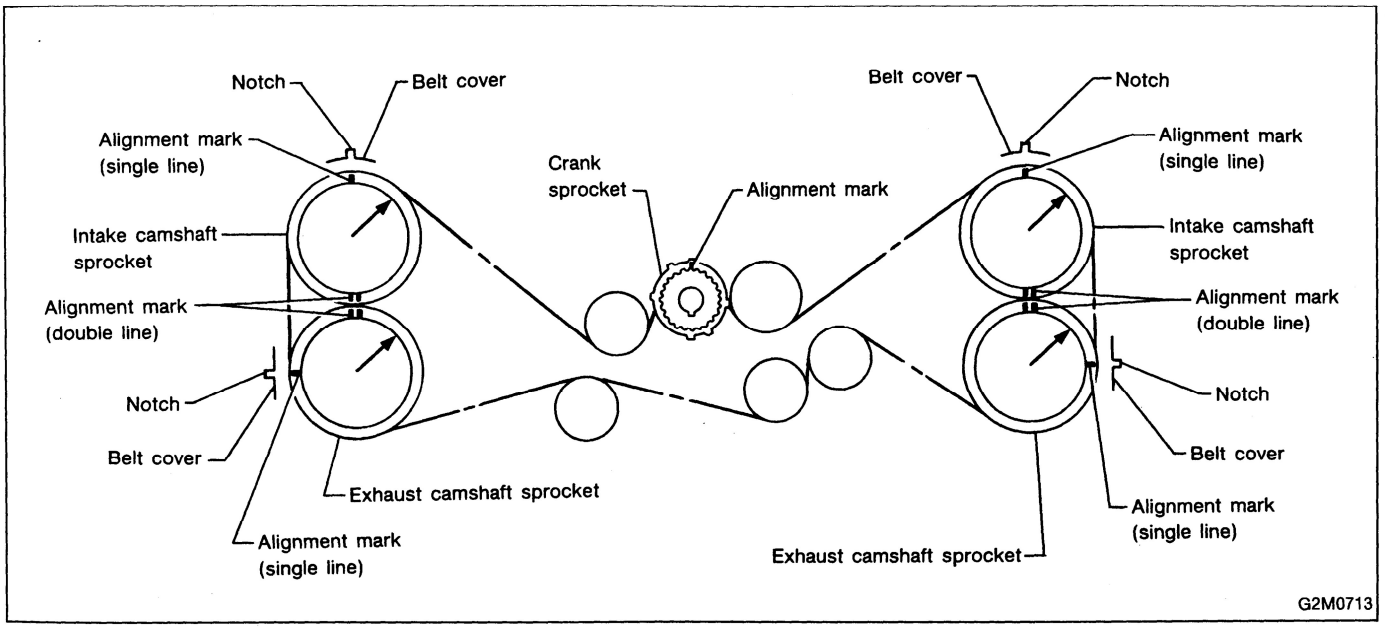

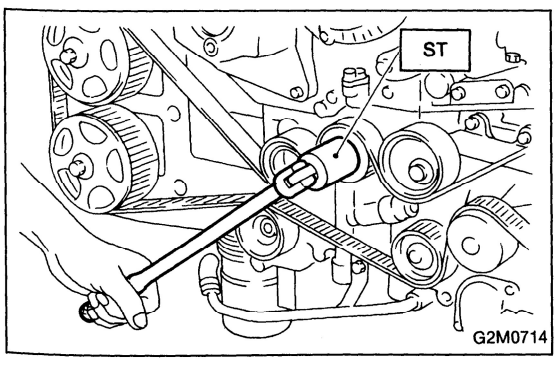

1) If alignment mark and/or arrow mark (which indicates rotation direction) on timing belt fade away, put new marks before removing timing belt as follows:
   (1) Turn crankshaft using ST, and align alignment marks on crankshaft sprocket, left-hand intake camshaft sprocket, left-hand exhaust camshaft sprocket, right-hand intake camshaft sprocket and right hand exhaust camshaft sprocket with notches of belt cover and cylinder block.

ST 499987500 CRANKSHAFT SOCKET

GETtheMANUALS.org

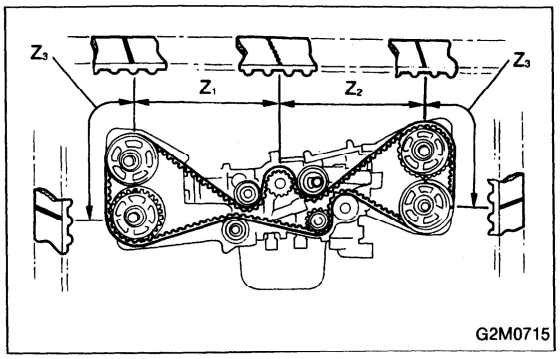

(2) Using white paint, put alignment and/or arrow marks on timing belts in relation to the sprockets.

Z_1: 54.5 tooth length
Z_2: 51 tooth length
Z_3: 28 tooth length

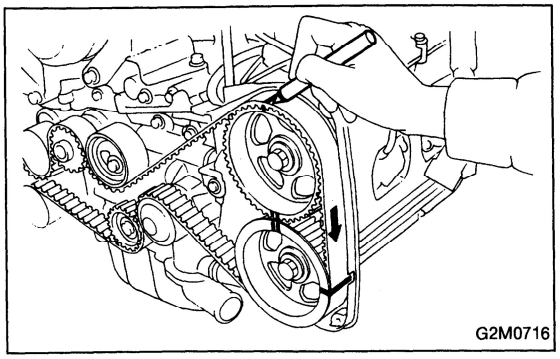

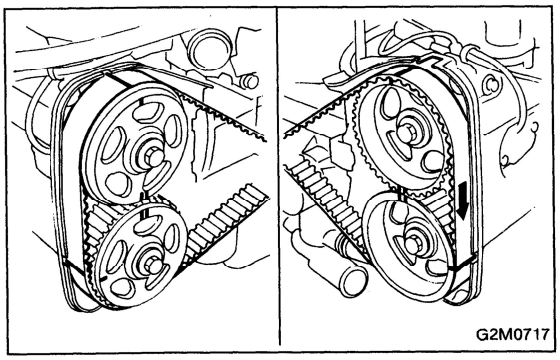

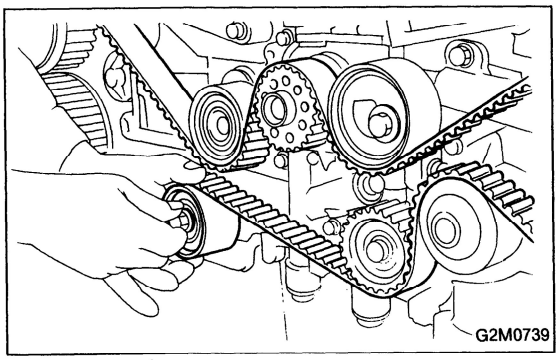

2) Loosen tensioner adjuster mounting bolts.
3) Remove belt idler.

4) Remove timing belt.

GETtheMANUALS.org

3. BELT TENSIONER AND IDLER

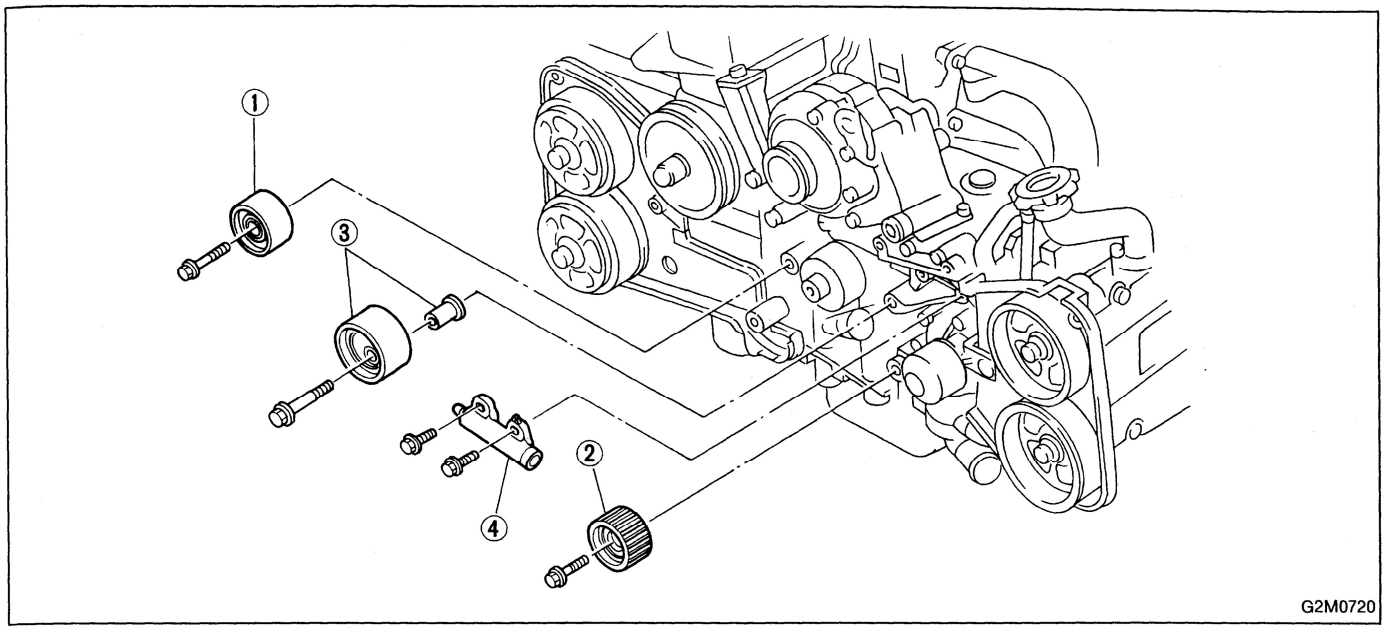

1) Remove belt idler.
2) Remove belt idler No. 2.
3) Remove belt tensioner and spacer.
4) Remove belt tension adjuster.

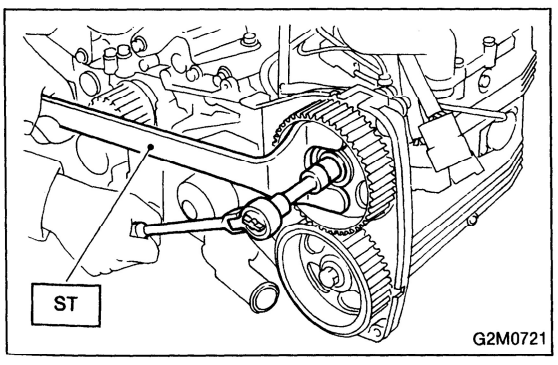

CAUTION:
After timing belt has been removed, never rotate intake and exhaust, camshaft sprocket.
If camshaft sprocket is rotated, the intake and exhaust valve heads strike together and valve stems are bent. For this reason, when removing camshaft sprocket, lock the camshaft sprocket using ST so as to avoid turning camshaft.
ST 499207100 CAMSHAFT SPROCKET WRENCH

GETtheMANUALS.org

4. SPROCKET

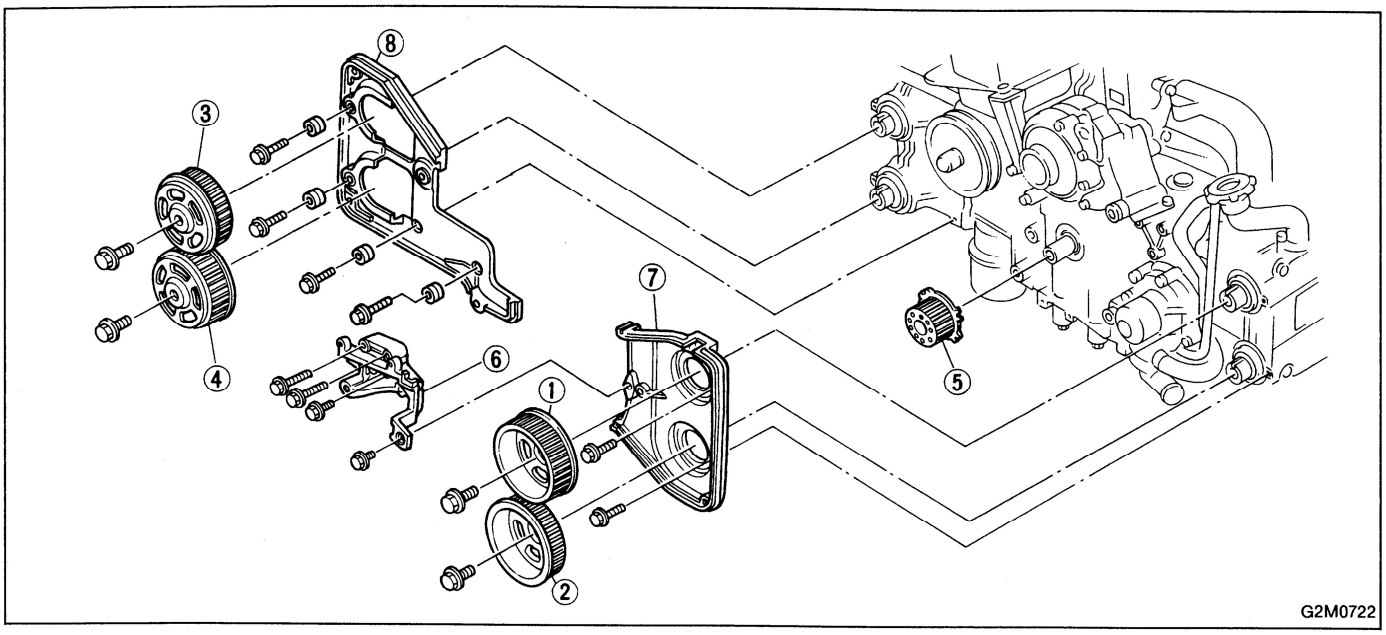

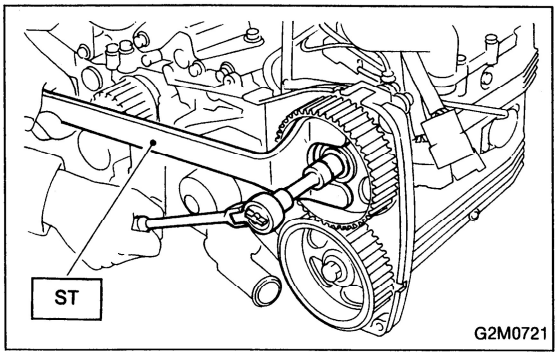

1) Remove left-hand intake camshaft sprocket.
2) Remove left-hand exhaust camshaft sprocket.
3) Remove right-hand intake camshaft sprocket.
4) Remove right-hand exhaust camshaft sprocket.
ST 499207100 CAMSHAFT SPROCKET WRENCH
5) Remove crankshaft sprocket.
6) Remove tensioner bracket.
7) Remove left-hand belt cover No. 2.
8) Remove right-hand belt cover No. 2.

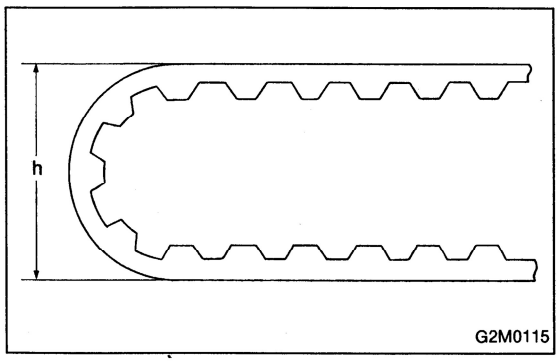

B: INSPECTION

1. TIMING BELT

1) Check timing belt teeth for breaks, cracks, and wear. If any fault is found, replace belt.
2) Check the condition of back side of belt; if any crack is found, replace belt.

CAUTION:
- **Be careful not to let oil, grease or coolant contact the belt. Remove quickly and thoroughly if this happens.**
- **Do not bend the belt sharply.**

Bending radius: h
60 mm (2.36 in) or more

GETtheMANUALS.org

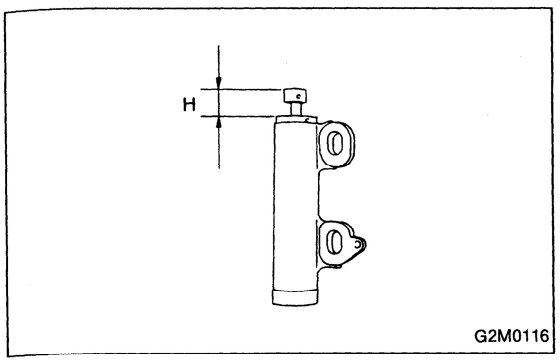

2. BELT TENSION ADJUSTER

1) Visually check oil seals for leaks, and rod ends for abnormal wear or scratches. If necessary, replace faulty parts.

CAUTION:
Slight traces of oil at rod's oil seal does not indicate a problem.

2) While holding tensioner with both hands, push the rod section against floor or wall with a force of 147 to 490 N (15 to 50 kg, 33 to 110 lb) to ensure that the rod section does not move. If it moves, replace tension adjuster with a new one.

3) Measure the extension of rod beyond the body. If it is not within specifications, replace with a new one.

Rod extension: H
15.4 — 16.4 mm (0.606 — 0.646 in)

3. BELT TENSIONER

1) Check mating surfaces of timing belt and contact point of tension adjuster rod for abnormal wear or scratches. Replace belt tensioner if faulty.

2) Check spacer and tensioner bushing for wear.

4. BELT IDLER

Check idler for smooth rotation. Replace if noise or excessive play is noted.

GETtheMANUALS.org

C: INSTALLATION

1. SPROCKET

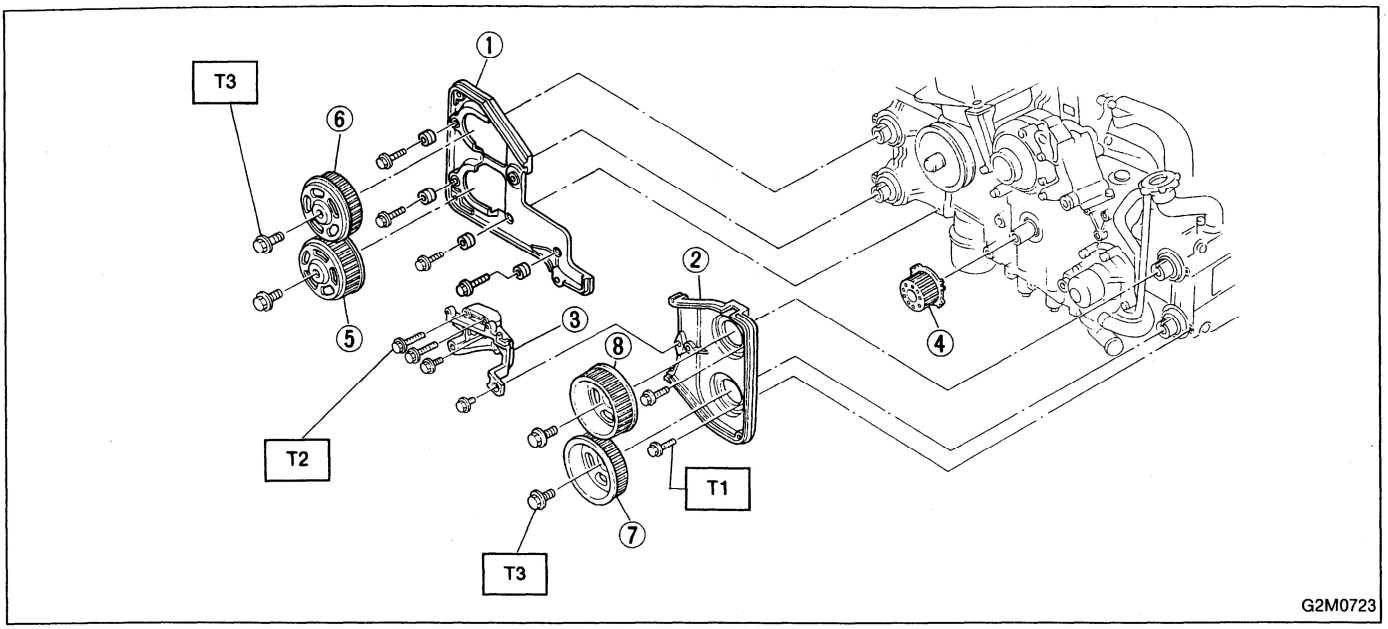

Tightening torque: N·m (kg-m, ft-lb)
T1: 4.9 ± 0.5 (0.5 ± 0.05, 3.6 ± 0.4)
T2: 25 ± 2 (2.5 ± 0.2, 18 ± 1.4)
T3: 78 ± 5 (8.0 ± 0.5, 58 ± 3.6)

1) Install right-hand belt cover No. 2.
2) Install left-hand belt cover No. 2.
3) Install tensioner bracket.
4) Install crankshaft sprocket.

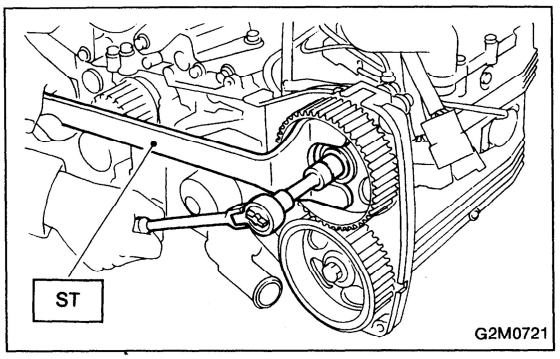

5) Install right-hand exhaust camshaft sprocket. To lock camshaft, use ST.
6) Install right-hand intake camshaft sprocket using ST.
7) Install left-hand exhaust camshaft sprocket using ST.
8) Install left-hand intake camshaft sprocket using ST.

ST 499207100 CAMSHAFT SPROCKET WRENCH

GETtheMANUALS.org

2. BELT TENSIONER AND IDLER

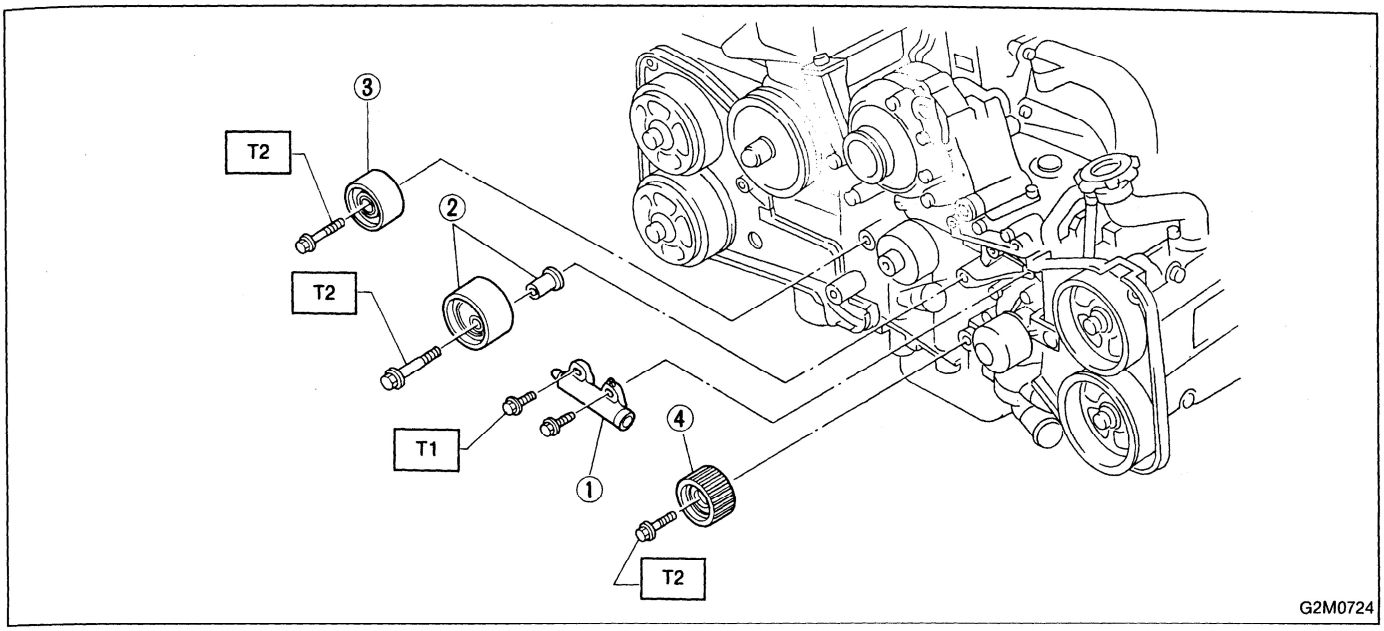

Tightening torque: N·m (kg-m, ft-lb)
T1: 25 ± 2 (2.5 ± 0.2, 18 ± 1.4)
T2: 39 ± 4 (4.0 ± 0.4, 29 ± 2.9)

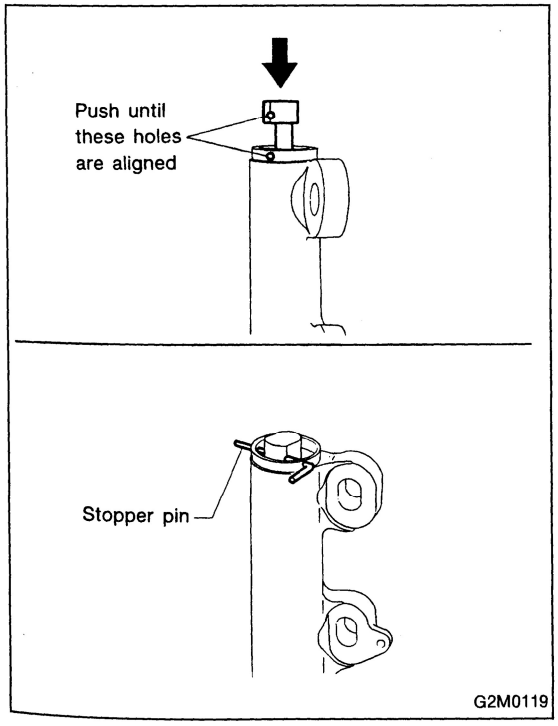

1) Installation of belt tensioner adjuster
   (1) Insert stopper pin 1.5 mm (0.059 in) dia. into place while pushing tension adjuster rod into body using a press.

CAUTION:
- **Do not allow press pressure to exceed 9,807 N (1,000 kg, 2,205 lb).**
- **Do not release press pressure until stopper pin is completely inserted.**
- **Push tension adjuster rod vertically.**

GETtheMANUALS.org

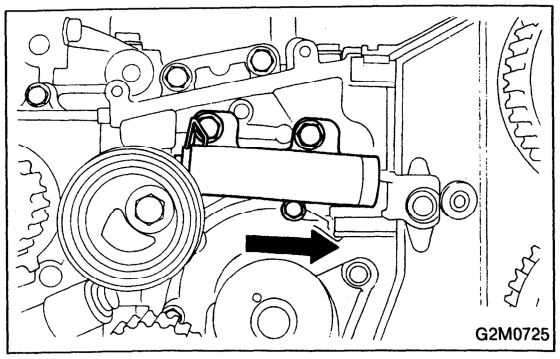

(2) Temporarily tighten bolts while tension adjuster is pushed all the way to the right.

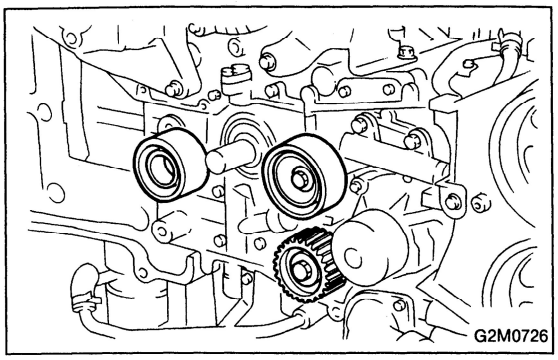

2) Install belt tensioner.
3) Install belt idler.
4) Install belt idler No. 2.

3. TIMING BELT

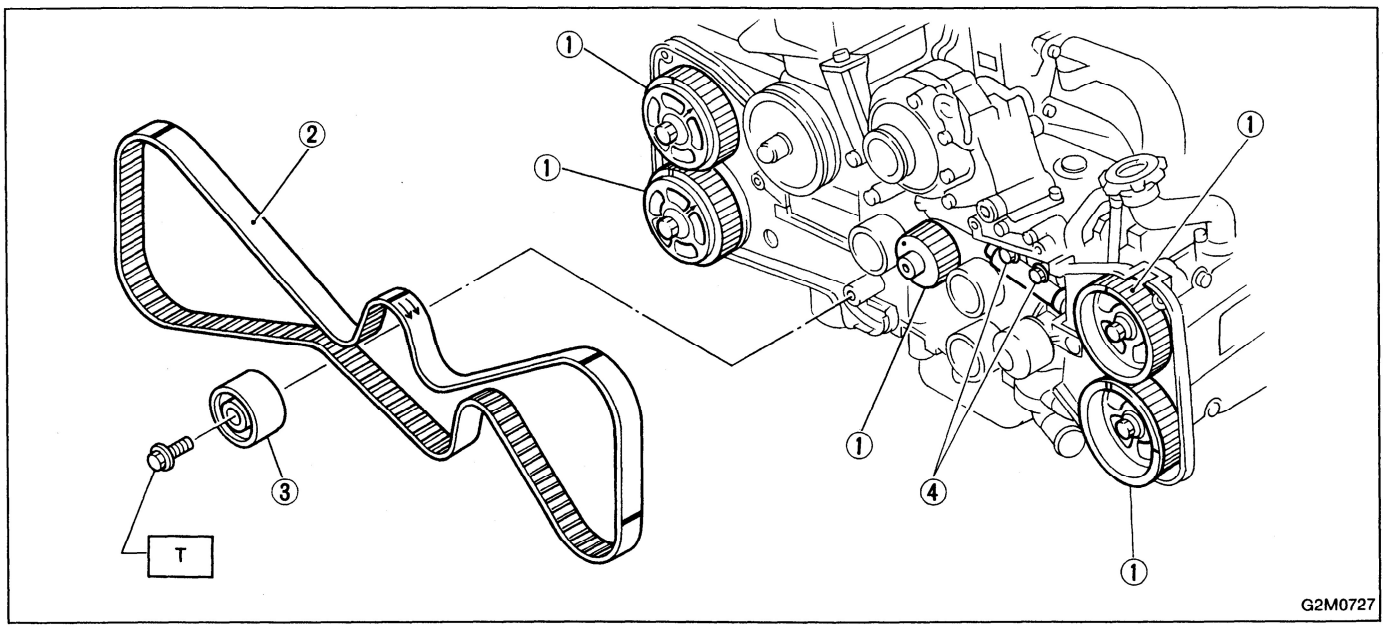

Tightening torque: N·m (kg-m, ft-lb)
T: 39 ± 4 (4.0 ± 0.4, 29 ± 2.9)

GETtheMANUALS.org

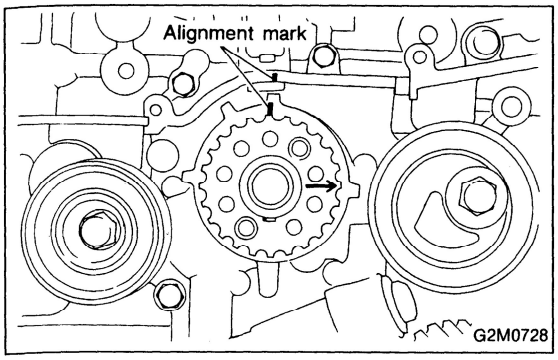

1) Crankshaft and camshaft sprocket alignment
(1) Align mark on crankshaft sprocket with mark on the oil pump cover at cylinder block.

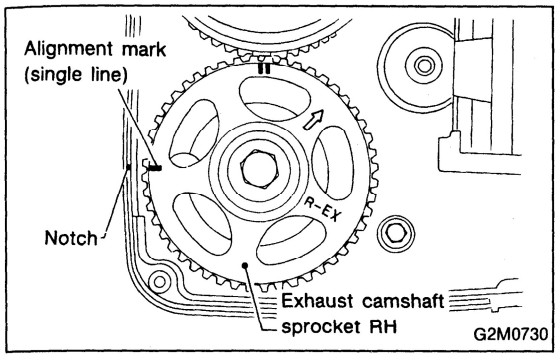

(2) Align single line mark on right-hand exhaust camshaft sprocket with notch on belt cover.

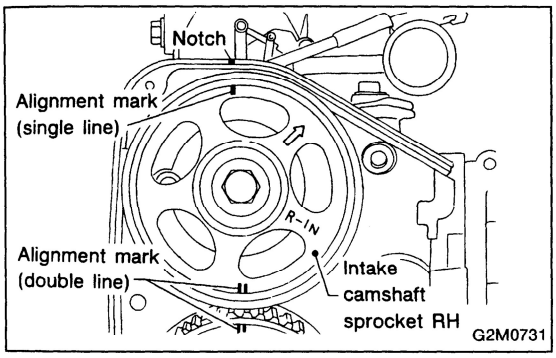

(3) Align single line mark on right-hand exhaust camshaft sprocket with notch on belt cover.
(Make sure double lines on intake camshaft and exhaust camshaft sprockets are aligned.)

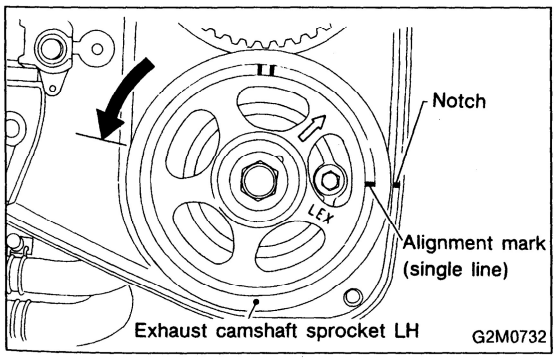

(4) Align single line mark on left-hand exhaust camshaft sprocket with notch on belt cover by turning sprocket counter-clockwise (as viewed from front of engine).

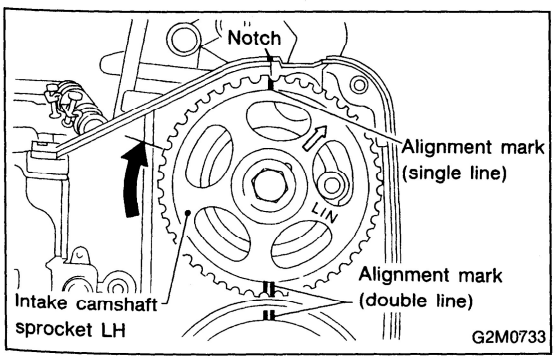

(5) Align single line mark on left-hand intake camshaft sprocket with notch on belt cover by turning sprocket clockwise (as viewed from front of engine).
Ensure double lines on intake and exhaust camshaft sprockets are aligned.

GETtheMANUALS.org

(6) Ensure camshaft and crankshaft sprockets are positioned as shown.

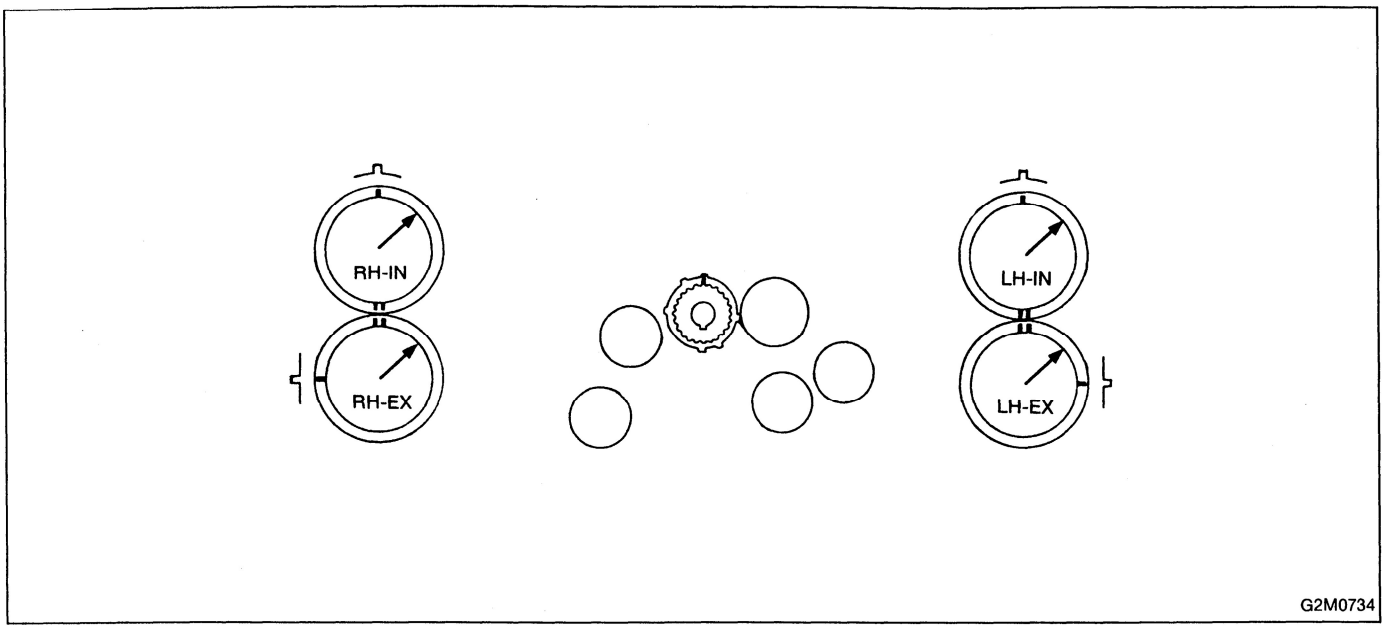

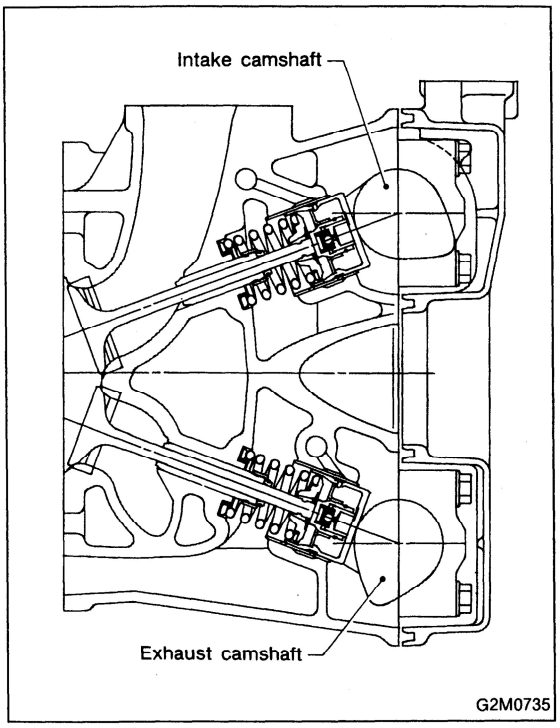

CAUTION:
• Intake and exhaust camshafts for this DOHC engine can be independently rotated with timing belts removed. As can be seen from the figure, if intake and exhaust valves are lifted simultaneously, their heads will interfere with each other, resulting in bent valves.

GETtheMANUALS.org

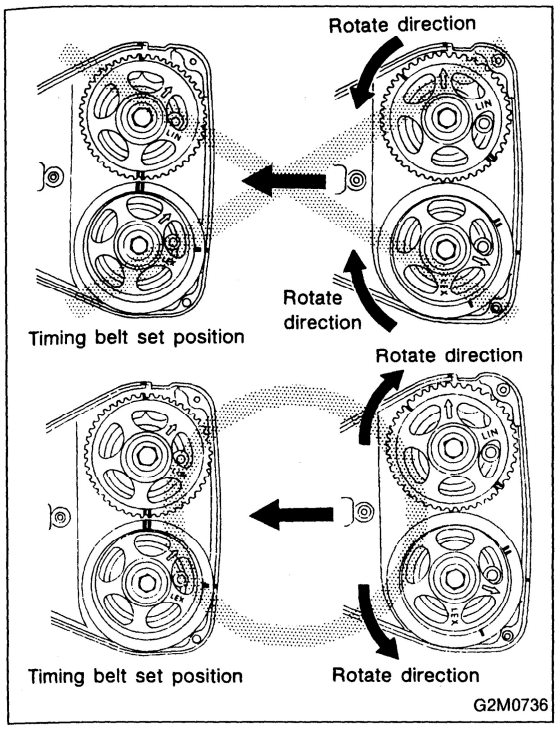

• When timing belts are not installed, four camshafts are held at the "zero-lift" position, where all cams on camshafts do not push intake and exhaust valves down. (Under this condition, all valves remain unlifted.)
• When camshafts are rotated to install timing belts, #2 intake and #4 exhaust cam of left-hand camshafts are held to push their corresponding valves down. (Under this condition, these valves are held lifted.) Right-side camshafts are held so that their cams do not push valves down.
• Left-hand camshafts must be rotated from the "zero-lift" position to the position where timing belt is to be installed at as small an angle as possible, in order to prevent mutual interference of intake and exhaust valve heads.
• Do not allow camshafts to rotate in the direction shown in the upper of figure as this causes both intake and exhaust valves to lift simultaneously, resulting in interference with their heads.

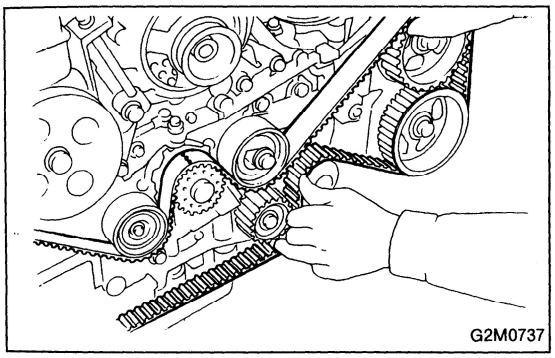

2) Installation of timing belt
Align alignment mark on timing belt with marks on sprockets in the numerical order shown in figure. While aligning marks, position timing belt properly.
CAUTION:
Ensure belt's rotating direction is correct.

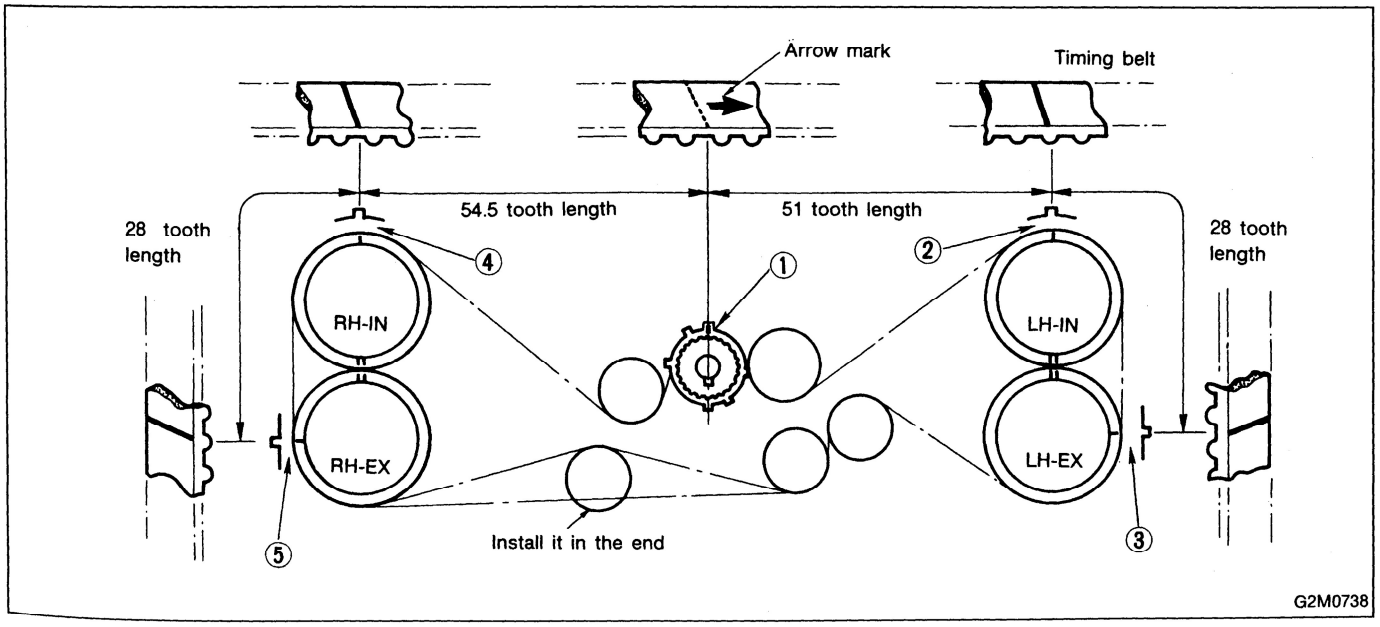

GETtheMANUALS.org

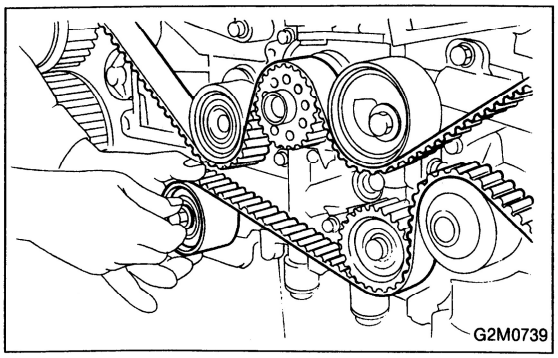

3) Install belt idler.
CAUTION:
Make sure that the marks on timing belt and sprockets are aligned.

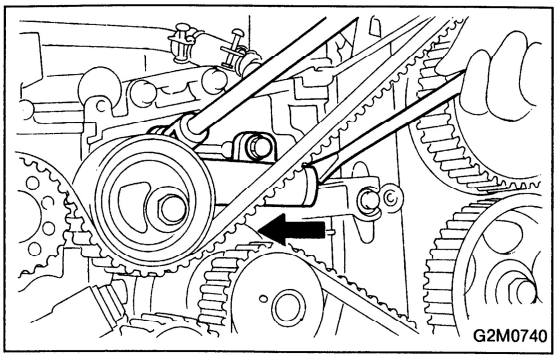

4) Loosen tension adjuster attaching bolts and move adjuster all the way to the left. Tighten the bolts.

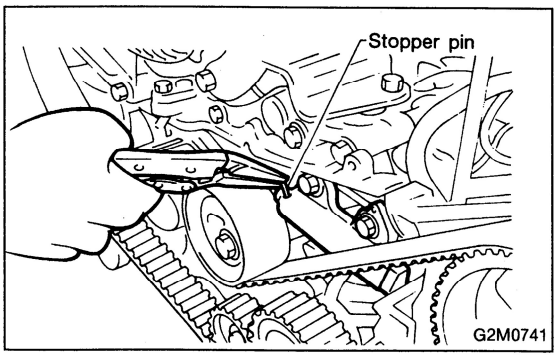

5) After ensuring that the marks on timing belt and sprockets are aligned, remove stopper pin from tension adjuster.

GETtheMANUALS.org

4. CRANKSHAFT PULLEY AND BELT COVER

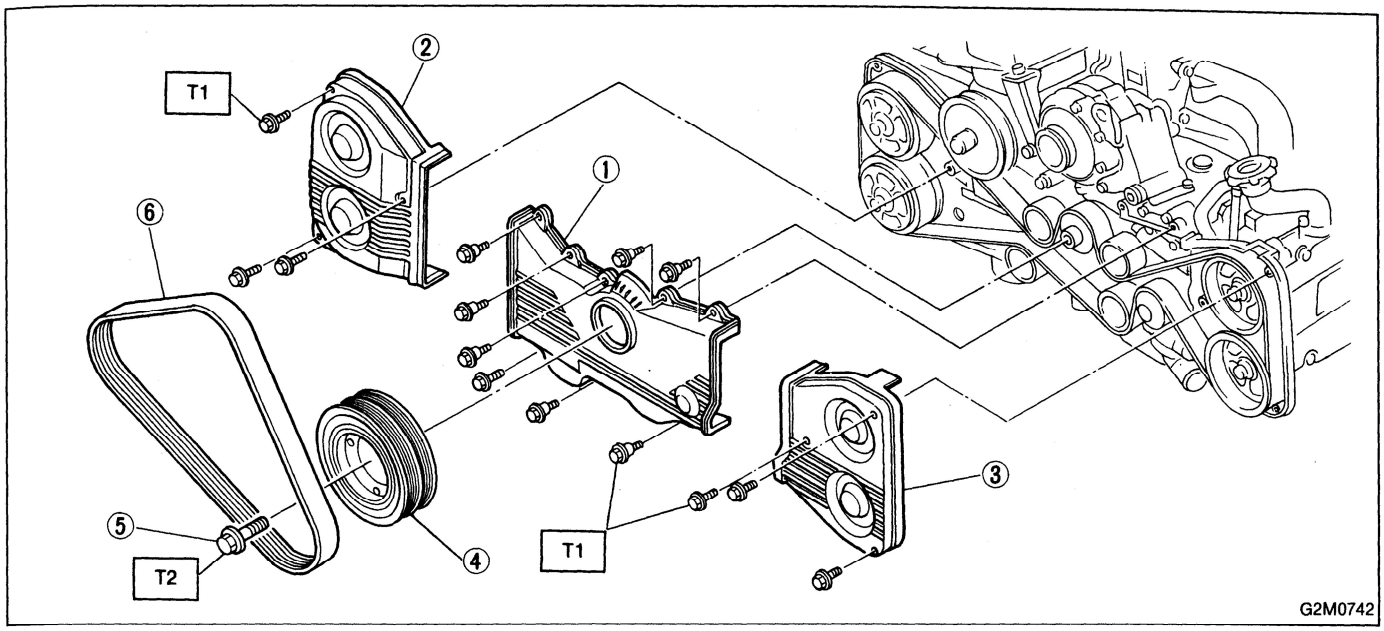

Tightening torque: N·m (kg-m, ft-lb)
T1: 5 ± 0.5 (0.5 ± 0.05, 3.6 ± 0.4)
T2: 110.3 ± 7.4 (11.25 ± 0.75, 81.4 ± 5.4)

1) Install front belt cover.
2) Install right-hand belt cover.
3) Install left-hand belt cover.
4) Install crankshaft pulley.
5) Install pulley bolt by using ST.

ST 499977000 CRANKSHAFT PULLEY WRENCH

6) Install V-belt.

CAUTION:
After installing V-belt, check and adjust V-belt tension.

GETtheMANUALS.org

3. Camshaft

A: REMOVAL

1. RELATED PARTS

Remove timing belt, camshaft sprockets and related parts.
<Ref. to 2-3b [W2A0].>

2. CAMSHAFT LH

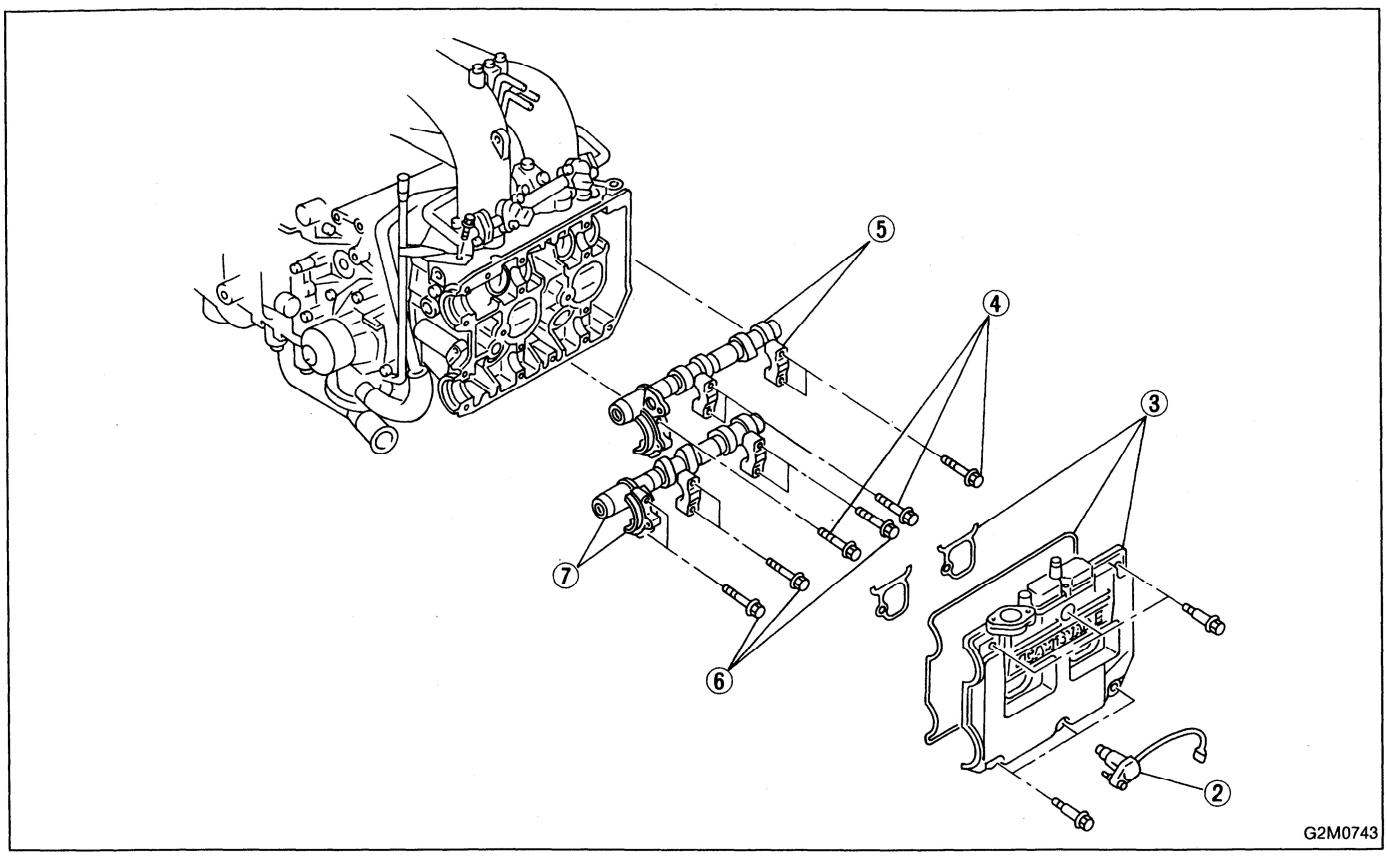

1) Remove camshaft position sensor.
2) Remove ignition coils.
3) Remove cylinder head cover and gasket.

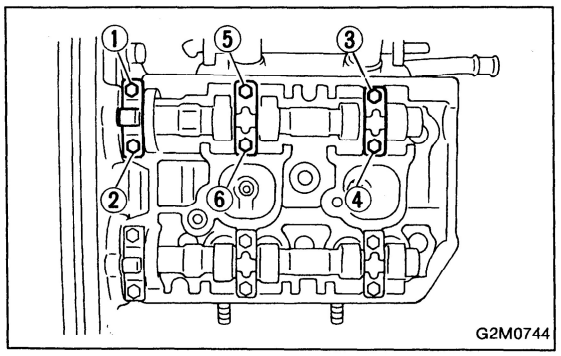

4) Loosen intake camshaft cap bolts equally, a little at a time in the numerical sequence shown in figure.
5) Remove camshaft caps and intake camshaft.

GETtheMANUALS.org

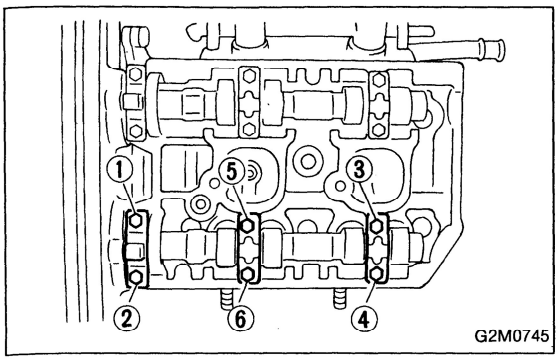

6) Loosen exhaust camshaft cap bolts equally, a little at a time in the numerical sequence shown in figure.
7) Remove camshaft caps and exhaust camshaft.

CAUTION:
Arrange camshaft caps in order so that they can be installed in their original positions.

8) Similarly, remove right-hand camshafts and related parts.

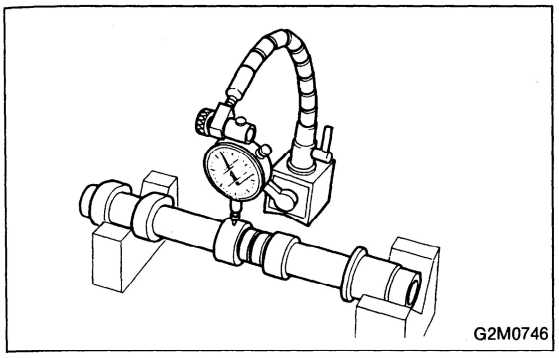

B: INSPECTION

1. CAMSHAFT

1) Measure the bend, and repair or replace if necessary.

Limit:
0.020 mm (0.0008 in)

2) Check journal for damage and wear. Replace if faulty.
3) Measure outside diameter of camshaft journal. If the journal diameter is not as specified, check the oil clearance.

	Camshaft journal	
	Front	Center, rear
Standard	31.946 — 31.963 mm (1.2577 — 1.2584 in)	27.946 — 27.963 mm (1.1002 — 1.1009 in)

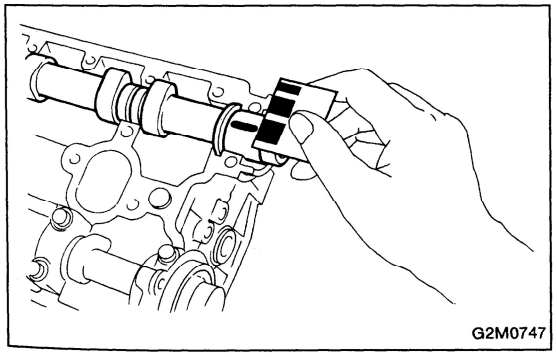

4) Measurement of the camshaft journal oil clearance
   (1) Clean the bearing caps and camshaft journals.
   (2) Place the camshafts on the cylinder head. (Without installing valve rocker.)
   (3) Place plastigauge across each of the camshaft journals.
   (4) Install the bearing caps.
< Ref. to 2-3b [W3C1]. >

CAUTION:
Do not turn the camshaft.

   (5) Remove the bearing caps.
   (6) Measure the widest point of the plastigauge on each journal.
   If the oil clearance exceeds the limit, replace the camshaft. If necessary, replace the camshaft caps and cylinder head as a set.

Standard oil clearance:
0.037 — 0.072 mm (0.0015 — 0.0028 in)

Limit:
0.10 mm (0.0039 in)

   (7) Completely remove the plastigauge.

GETtheMANUALS.org

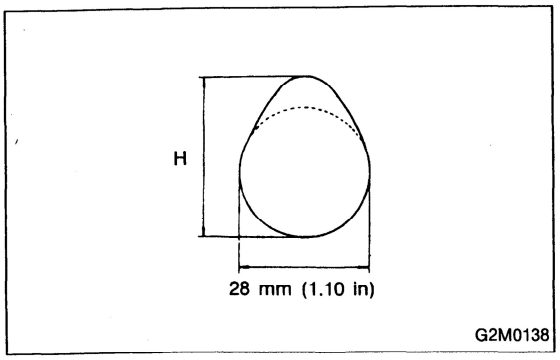

5) Check cam face condition; remove minor faults by grinding with oil stone. Measure the cam height H; replace if the limit has been exceeded.

Standard:
41.78 — 41.88 mm (1.6449 — 1.6488 in)

Limit:
41.62 mm (1.6386 in)

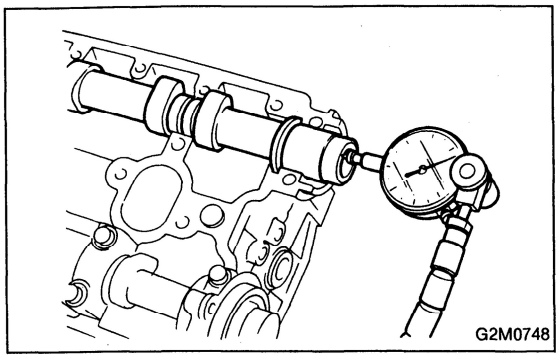

6) Measure the thrust clearance of camshaft with dial gauge. If the clearance exceeds the limit, replace caps and cylinder head as a set. If necessary replace camshaft.

Standard:
0.015 — 0.070 mm (0.0006 — 0.0028 in)

Limit:
0.1 mm (0.004 in)

C: INSTALLATION

1. CAMSHAFT

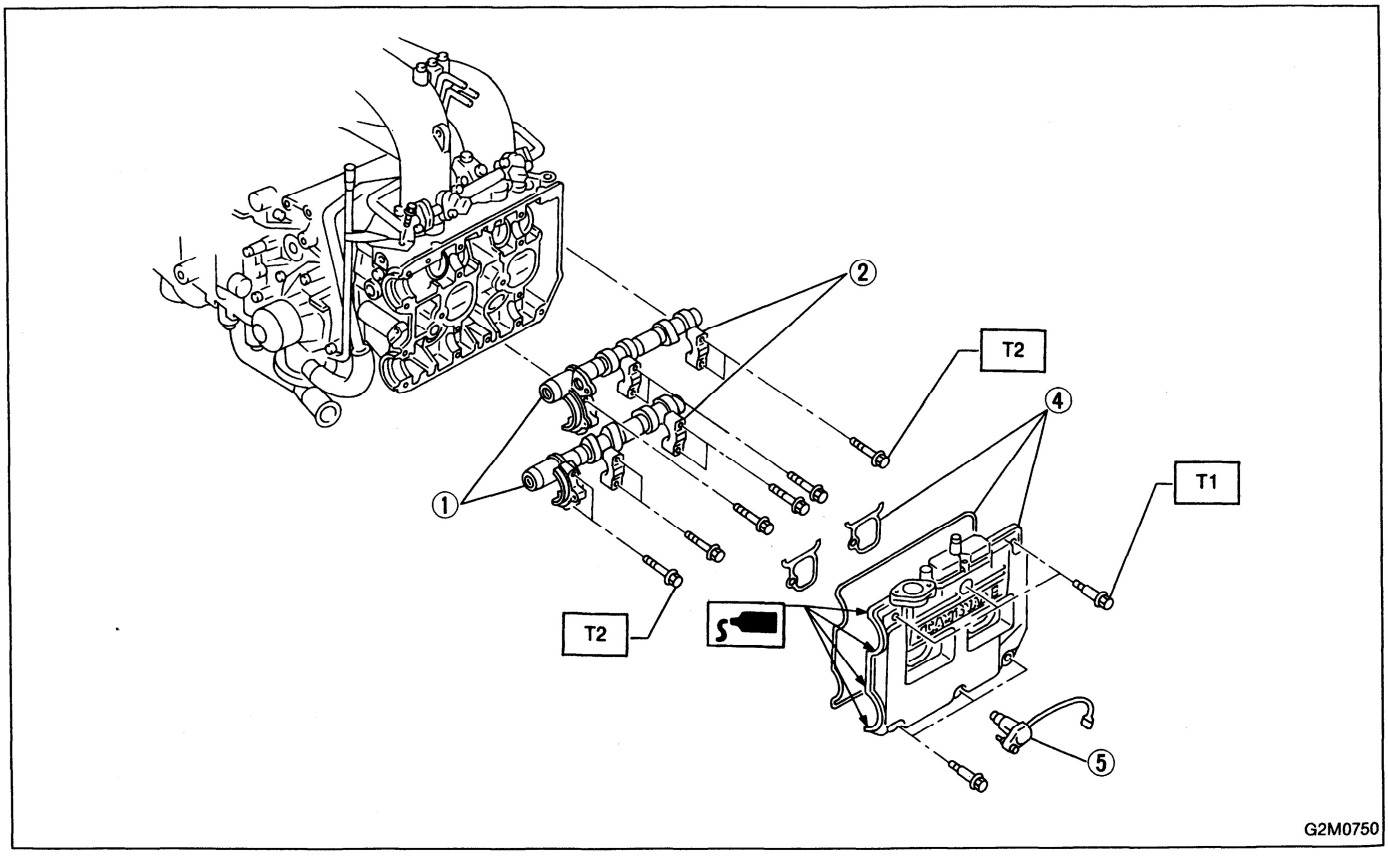

Tightening torque: N·m (kg-m, ft-lb)
T1: 10 ± 0.7 (1.0 ± 0.07, 7.2 ± 0.5)
T2: 20 ± 2 (2.0 ± 0.2, 14.5 ± 1.4)

GETtheMANUALS.org

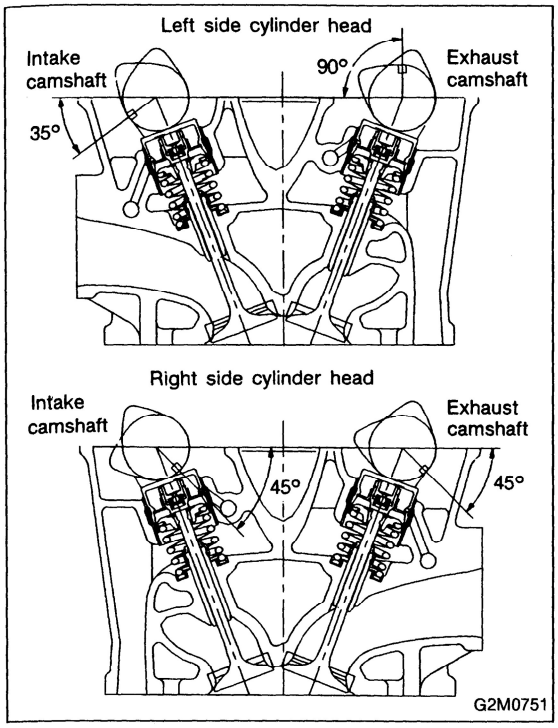

1) Camshaft installation
Apply engine oil to cylinder head at camshaft bearing location before installing camshaft. Install camshaft so that rocker arm is close to or in contact with "base circle" of cam lobe.

CAUTION:
- **When camshafts are positioned as shown in figure, camshafts need to be rotated at a minimum to align with timing belt during installation.**
- **Right-hand camshaft need not be rotated when set at position shown in figure.**

Left-hand intake camshaft: Rotate 80° clockwise.
Left-hand exhaust camshaft: Rotate 45° counter-clockwise.

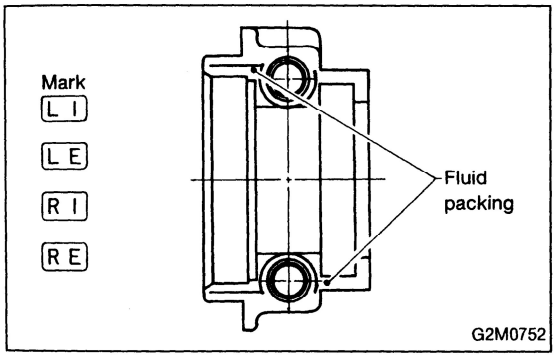

2) Camshaft cap installation
(1) Apply fluid packing sparingly to cap mating surface.

CAUTION:
Do not apply fluid packing excessively. Failure to do so may cause excess packing to come out and flow toward oil seal, resulting in oil leaks.

Fluid packing:
THREE BOND 1215 or equivalent

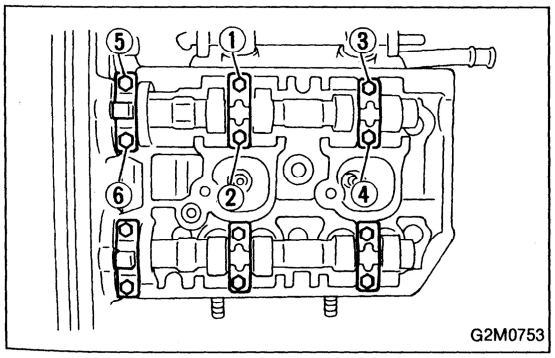

(2) Apply engine oil to cap bearing surface and install cap on camshaft as shown by identification mark.
(3) Gradually tighten cap in at least two stages in the numerical order shown in figure, and then tighten to specified torque.
(4) Similarly, tighten cap on exhaust side.
After tightening cap, ensure camshaft rotates only slightly while holding it at "base" circle.

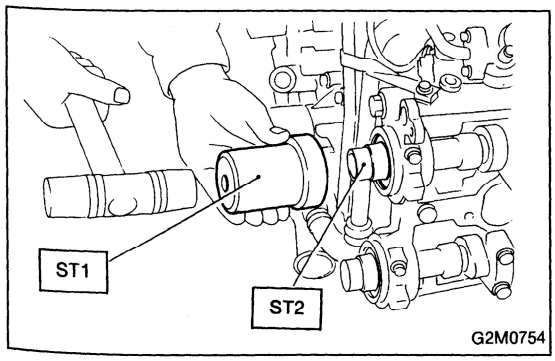

3) Camshaft oil seal installation
Apply grease to new oil seal lips and press onto front end of camshaft by using ST1 and ST2.

CAUTION:
Use a new oil seal.

ST1 499587100 OIL SEAL INSTALLER
ST2 499597000 OIL SEAL GUIDE

GETtheMANUALS.org

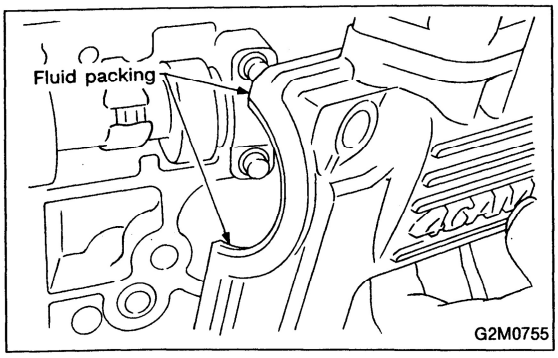

4) Rocker cover installation
   (1) Install gasket on rocker cover.
   Install peripheral gasket and ignition coil gasket.
   (2) Apply fluid packing to four front open edges of peripheral gasket.

Fluid packing:
THREE BOND 1215 or equivalent

   (3) Install rocker cover on cylinder head. Ensure gasket is properly positioned during installation.

5) Install ignition coil.
6) Install cam angle sensor.
7) Similarly, install parts on right-hand side.

2. RELATED PARTS

Install timing belt, camshaft sprockets and related parts.
<Ref. to 2-3b [W2C0].>

GETtheMANUALS.org

4. Cylinder Head

A: REMOVAL

1. INTAKE MANIFOLD

1) Remove V-belt.
2) Remove alternator, air conditioner compressor and brackets.
3) Remove hoses and tubes from cylinder block.
4) Disconnect each connector and/or remove connector bracket.
5) Remove coolant filler tank.
6) Remove intake manifold assembly and gasket.
7) Remove water pipe.
8) Remove crank angle sensor, cam angle sensor and knock sensor.
9) Remove timing belt, camshaft sprockets and related parts.
<Ref. to 2-3b [W2A0].>
10) Remove rocker cover, camshafts and related parts.
<Ref. to 2-3b [W3A0].>

2. CYLINDER HEAD

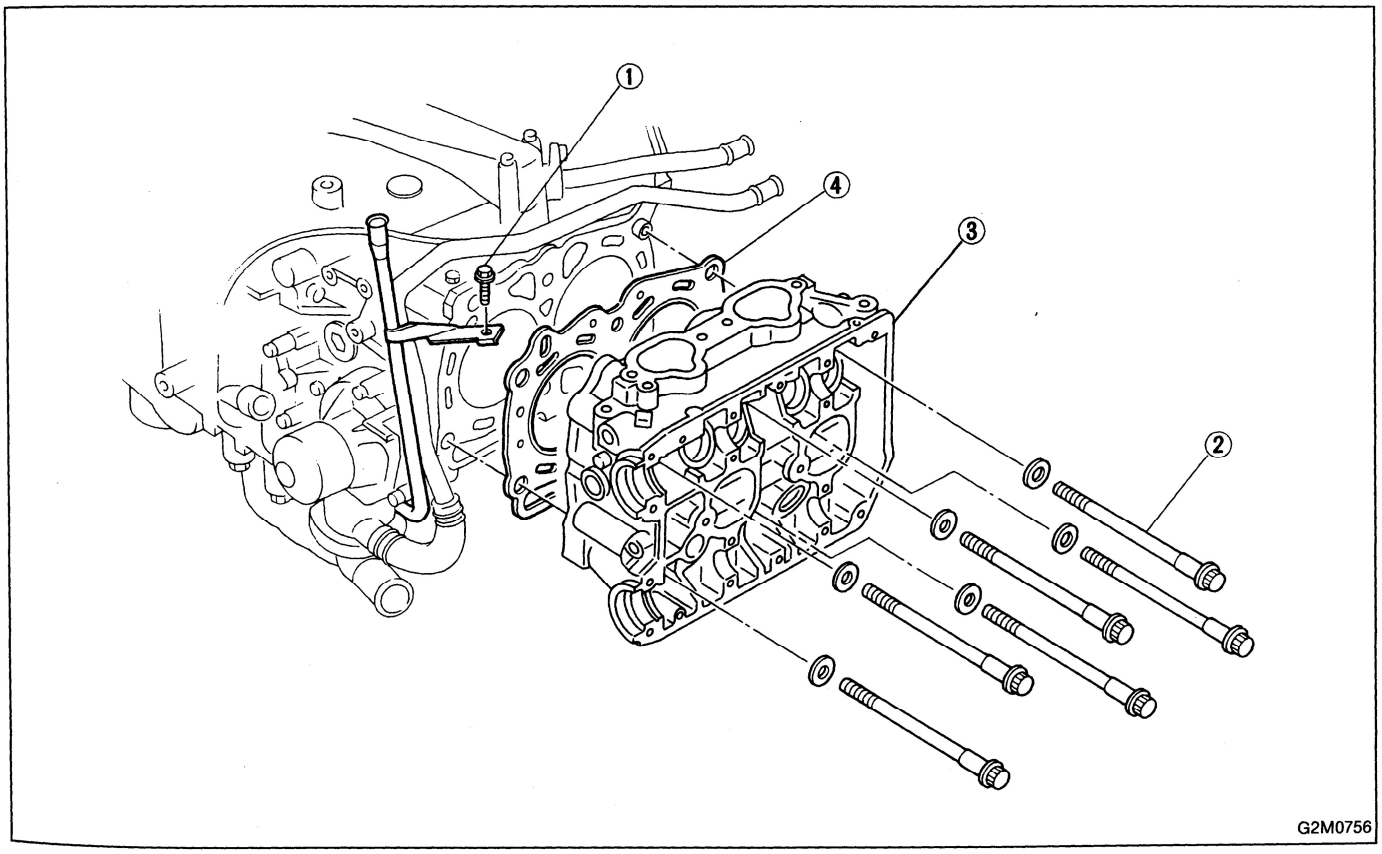

GETtheMANUALS.org

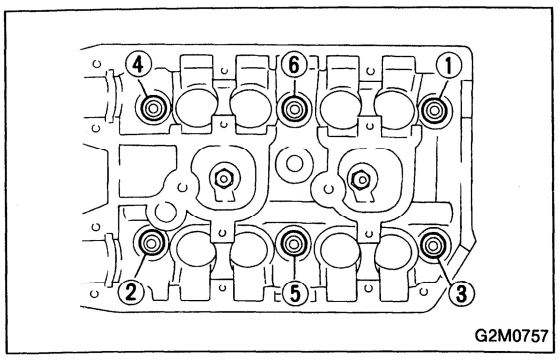

1) Remove oil level gauge guide attaching bolt (left-hand only).
2) Remove cylinder head bolts in numerical sequence shown in figure.

CAUTION:
Leave bolts ① and ④ engaged by three or four threads to prevent cylinder head from falling.

3) While tapping cylinder head with a plastic hammer, separate it from cylinder block.
Remove bolts ① and ④ to remove cylinder head.
4) Remove cylinder head gasket.
5) Similarly, remove right-hand cylinder head.

B: DISASSEMBLY

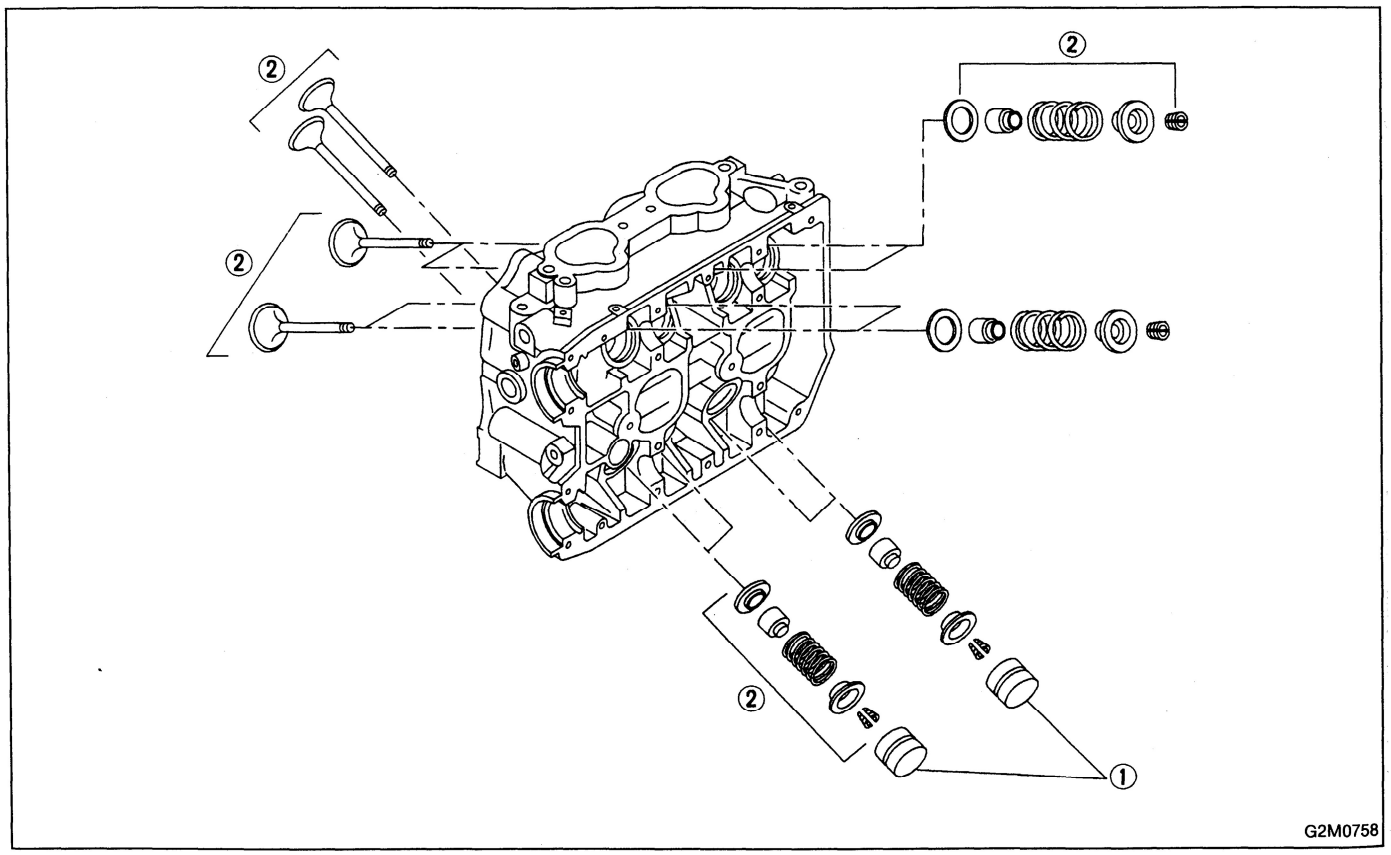

GETtheMANUALS.org

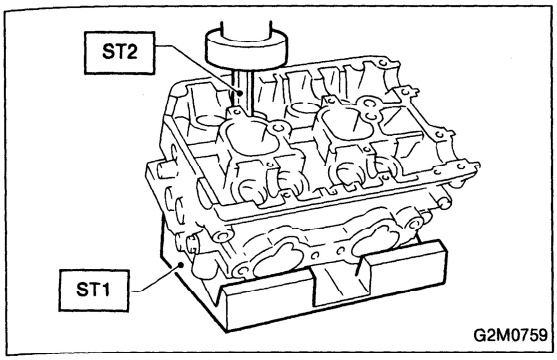

1) Remove hydraulic lash adjusters.
2) Compress the valve spring and remove the valve spring retainer key. Remove each valve and valve spring.
ST1 498267600 CYLINDER HEAD TABLE
ST2 499718000 VALVE SPRING REMOVER

CAUTION:
- **Mark each valve to prevent confusion.**
- **Use extreme care not to damage the lips of the intake valve oil seals and exhaust valve oil seals.**

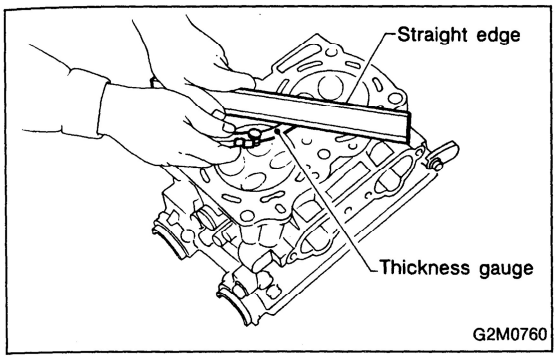

C: INSPECTION

1. CYLINDER HEAD

1) Make sure that no crack or other damage exists. In addition to visual inspection, inspect important areas by means of red check.
2) Measure the warping of the cylinder head surface that mates with crankcase by using a straight edge and thickness gauge.
If the warping exceeds 0.05 mm (0.0020 in), regrind the surface with a surface grinder.

Warping limit:
0.05 mm (0.0020 in)

Grinding limit:
0.3 mm (0.012 in)

Standard height of cylinder head:
127.5 mm (5.02 in)

CAUTION:
Uneven torque for the cylinder head nuts can cause warping. When reassembling, pay special attention to the torque so as to tighten evenly.

GETtheMANUALS.org

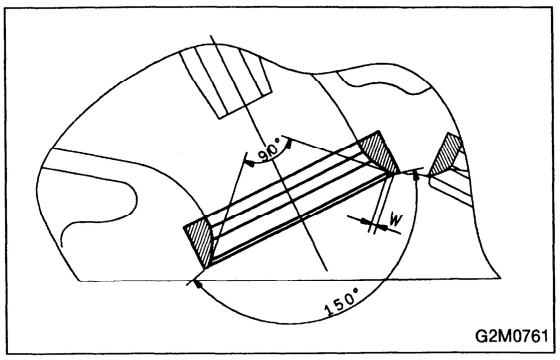

2. VALVE SEAT

Inspect intake and exhaust valve seats, and correct the contact surfaces with valve seat cutter if they are defective or when valve guides are replaced.

Valve seat width: W
- ***Intake***
  - ***Standard***
    - ***1.0 mm (0.039 in)***
  - ***Limit***
    - ***1.7 mm (0.067 in)***
- ***Exhaust***
  - ***Standard***
    - ***1.5 mm (0.059 in)***
  - ***Limit***
    - ***2.2 mm (0.087 in)***

3. VALVE GUIDE

1) Check the clearance between valve guide and stem. The clearance can be checked by measuring the outside diameter of valve stem and the inside diameter of valve guide with outside and inside micrometers respectively.

Clearance between the valve guide and valve stem:
- ***Standard***
  - ***Intake***
    - ***0.035 — 0.062 mm (0.0014 — 0.0024 in)***
  - ***Exhaust***
    - ***0.040 — 0.067 mm (0.0016 — 0.0026 in)***
- ***Limit***
  - ***0.15 mm (0.0059 in)***
- ***Valve guide inner diameter:***
  - ***6.000 — 6.015 mm (0.2362 — 0.2368 in)***
- ***Valve stem outer diameter:***
  - ***Intake***
    - ***5.950 — 5.965 mm (0.2343 — 0.2348 in)***
  - ***Exhaust***
    - ***5.950 — 5.965 mm (0.2343 — 0.2348 in)***

GETtheMANUALS.org

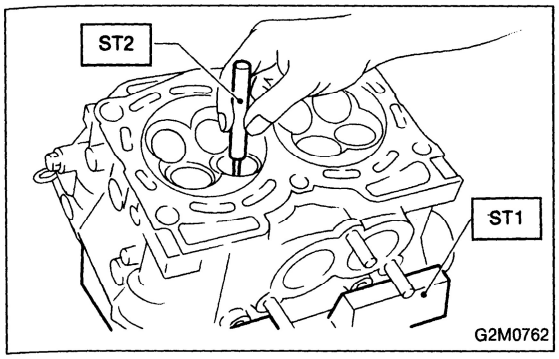

2) If the clearance between valve guide and stem exceeds the specification, replace guide as follows:
(1) Place cylinder head on ST1 with the combustion chamber upward so that valve guides enter the holes in ST1.
(2) Insert ST2 into valve guide and press it down to remove valve guide.

ST1 498267300 CYLINDER HEAD TABLE
ST2 499767300 VALVE GUIDE REMOVER

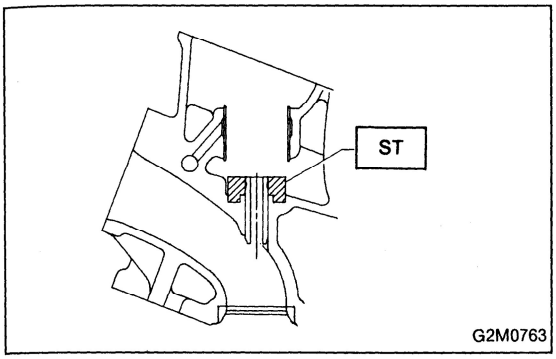

(3) Turn cylinder head upside down and place ST as shown in the figure.

ST 499767100 VALVE GUIDE ADJUSTER

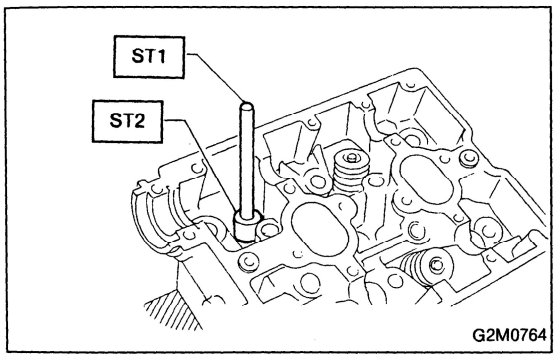

(4) Before installing new valve guide, make sure that neither scratches nor damages exist on the inside surface of the valve guide holes in cylinder head.
(5) Put new valve guide, coated with sufficient oil, in cylinder, and insert ST1 into valve guide. Press in until the valve guide upper end is flush with the upper surface of ST2.

ST1 499767200 VALVE GUIDE REMOVER
ST2 499767000 VALVE GUIDE ADJUSTER

(6) Check the valve guide protrusion.

Valve guide protrusion: L
13.3 — 13.7 mm (0.524 — 0.539 in)

(7) Ream the inside of valve guide with ST. Gently rotate the reamer clockwise while pressing it lightly into valve guide, and return it also rotating clockwise. After reaming, clean valve guide to remove chips.

ST 499767400 VALVE GUIDE REAMER

CAUTION:
- **Apply engine oil to the reamer when reaming.**
- **If the inner surface of the valve guide is torn, the edge of the reamer should be slightly ground with an oil stone.**
- **If the inner surface of the valve guide becomes lustrous and the reamer does not chips, use a new reamer or remedy the reamer.**

(8) Recheck the contact condition between valve and valve seat after replacing valve guide.

GETtheMANUALS.org

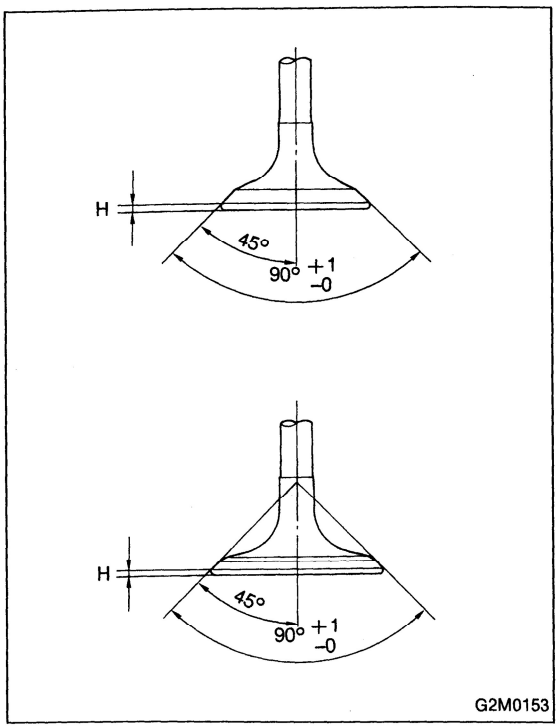

4. INTAKE AND EXHAUST VALVE

1) Inspect the flange and stem of valve, and replace if damaged, worn, or deformed, or if "H" is less than the specified limit.

H:

Intake
Standard
1.2 mm (0.047 in)
Limit
0.8 mm (0.031 in)
Exhaust
Standard
1.5 mm (0.059 in)
Limit
0.8 mm (0.031 in)
Valve overall length:
Intake 93.3 mm (3.673 in)
Exhaust 93.6 mm (3.685 in)

2) Put a small amount of grinding compound on the seat surface and lap the valve and seat surface. Install a new intake valve oil seal after lapping.

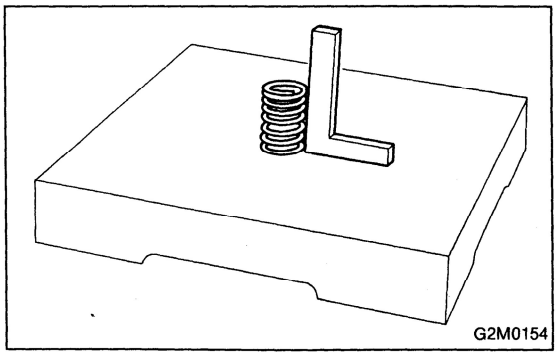

5. VALVE SPRINGS

1) Check valve springs for damage, free length, and tension. Replace valve spring if it is not to the specifications presented below.

2) To measure the squareness of the valve spring, stand the spring on a surface plate and measure its deflection at the top using a try square.

	Valve spring
Free length	39.8 mm (1.567 in)
Tension/spring height	228.5 — 261.8 N (23.3 — 26.7 kg, 51.4 — 58.9 lb)/31.0 mm (1.220 in)
	462.9 — 531.5 N (47.2 — 54.2 kg, 104.1 — 119.5 lb)/23.2 mm (0.913 in)
Squareness	2.5°, 1.7 mm (0.067 in)

GETtheMANUALS.org

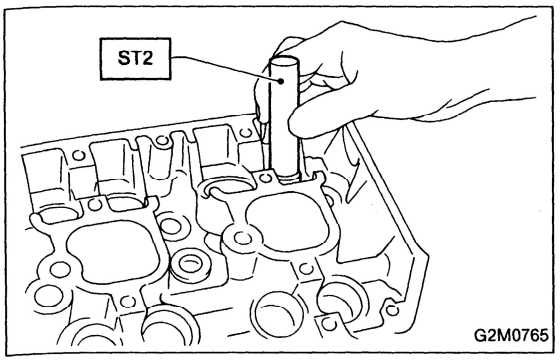

6. INTAKE AND EXHAUST VALVE OIL SEAL

Replace oil seal with new one, if lip is damaged or spring out of place, or when the surfaces of intake valve and valve seat are reconditioned or intake valve guide is replaced.

1) Place cylinder head on ST1.
2) Press in oil seal to the specified dimension indicated in the figure by using ST2.

ST1 498267200 CYLINDER HEAD TABLE
ST2 498857100 VALVE OIL SEAL GUIDE

CAUTION:
- **Apply engine oil to oil seal before force-fitting.**
- **Differentiate between intake valve oil seal and exhaust valve oil seal by noting their difference in color.**

Color of rubber part:
Intake [Black]
Exhaust [Brown]

Color of spring part:
Intake [Black]
Exhaust [Black]

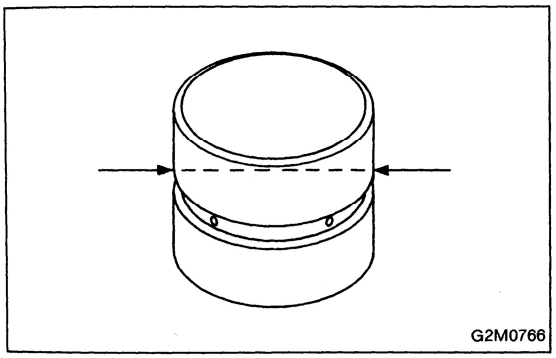

7. VALVE LASH ADJUSTER

1) Check valve lash adjuster visually.
2) Measure outer diameter of valve lash adjuster.

Outer diameter:
29.959 — 29.975 mm (1.1795 — 1.1801 in)

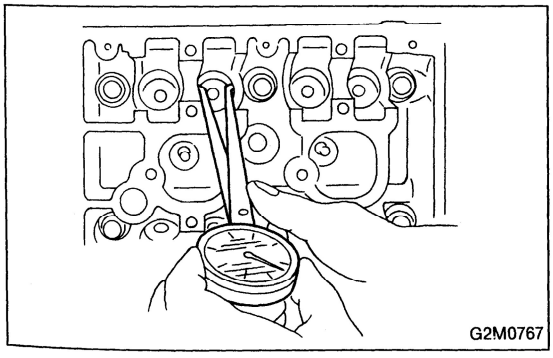

3) Measure inner diameter of bush on cylinder head.

Inner diameter:
29.994 — 30.016 mm (1.1809 — 1.1817 in)

CAUTION:
If difference between outer diameter of valve lash adjuster and inner diameter of bush is over the limit, replace cylinder head.

Standard:
0.019 — 0.057 mm (0.0007 — 0.0022 in)

Limit:
0.100 mm (0.0039 in)

GETtheMANUALS.org

D: ASSEMBLY

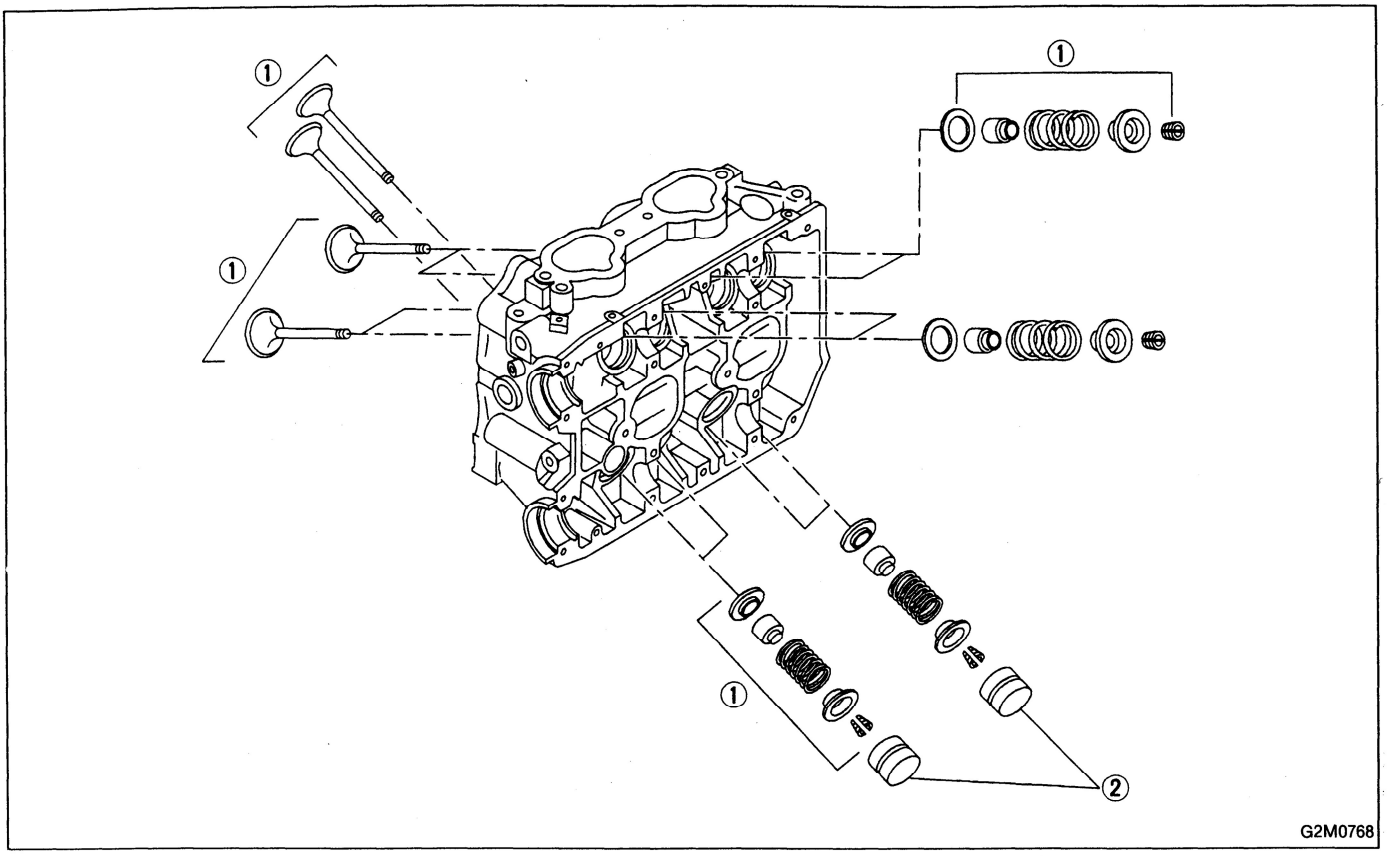

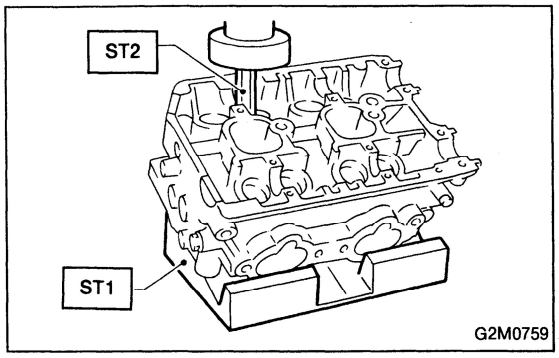

1) Installation of valve spring and valve
   (1) Coat stem of each valve with engine oil and insert valve into valve guide.

CAUTION:
When inserting valve into valve guide, use special care not to damage the oil seal lip.

   (2) Set cylinder head on ST1.
   (3) Install valve spring and retainer using ST2.

ST1 498267600 CYLINDER HEAD TABLE
ST2 499718000 VALVE SPRING REMOVER

CAUTION:
Be sure to install the valve springs with their close-coiled end facing the seat on the cylinder head.

   (4) Compress valve spring and fit valve spring retainer key.
   (5) After installing, tap valve spring retainers lightly with wooden hammer for better seating.

2) Install hydraulic lash adjuster.

GETtheMANUALS.org

E: INSTALLATION

1. CYLINDER HEAD

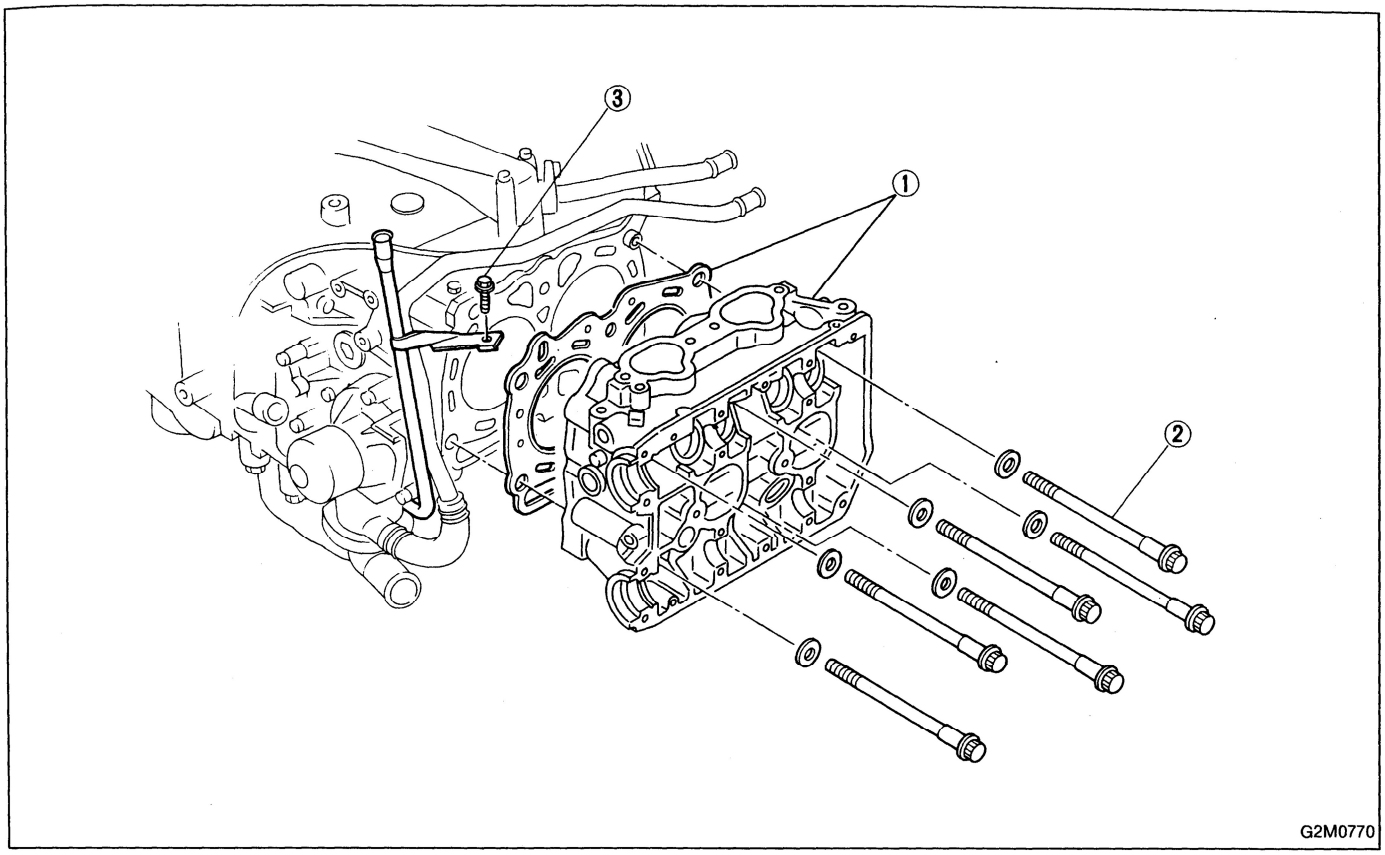

1) Install cylinder head and gaskets on cylinder block.

CAUTION:
Use new cylinder head gaskets.

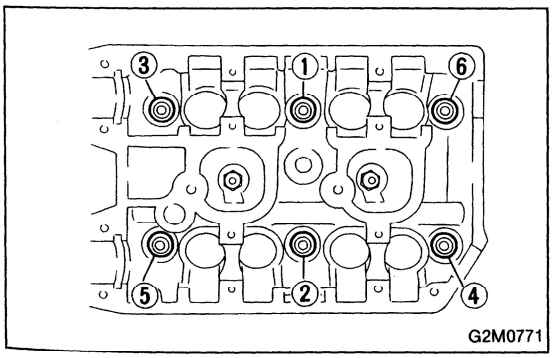

2) Tighten cylinder head bolts.
   (1) Apply a coat of engine oil to washers and bolt threads.
   (2) First tighten all bolts to 29 N·m (3.0 kg-m, 22 ft-lb) in the order shown in the figure. After this, tighten them further to 69 N·m (7.0 kg-m, 51 ft-lb) in the same order.
   (3) Back off all bolts by 180°. After this, back them off another 180°.
   (4) Tighten all bolts to 29 N·m (3.0 kg-m, 22 ft-lb) in the order shown in the figure.
   (5) Tighten all bolts by 80° to 90° in numerical sequence.

CAUTION:
Do not tighten bolts more than 90°.
   (6) Further tighten all bolts by 40° to 45° in numerical sequence.
   (7) Further tighten bolts ① and ② by 40° to 45°.

CAUTION:
• Ensure that "tightening angle" [steps (6) and (7)] do not exceed 45°.

GETtheMANUALS.org

● **Ensure that the total "re-tightening angle" [steps (6) and (7)] do not exceed 90°.**

3) Install oil level gauge guide attaching bolt (left-hand only).

2. INTAKE MANIFOLD

1) Install camshafts, cylinder head cover and related parts.
<Ref. to 2-3b [W3C0].>

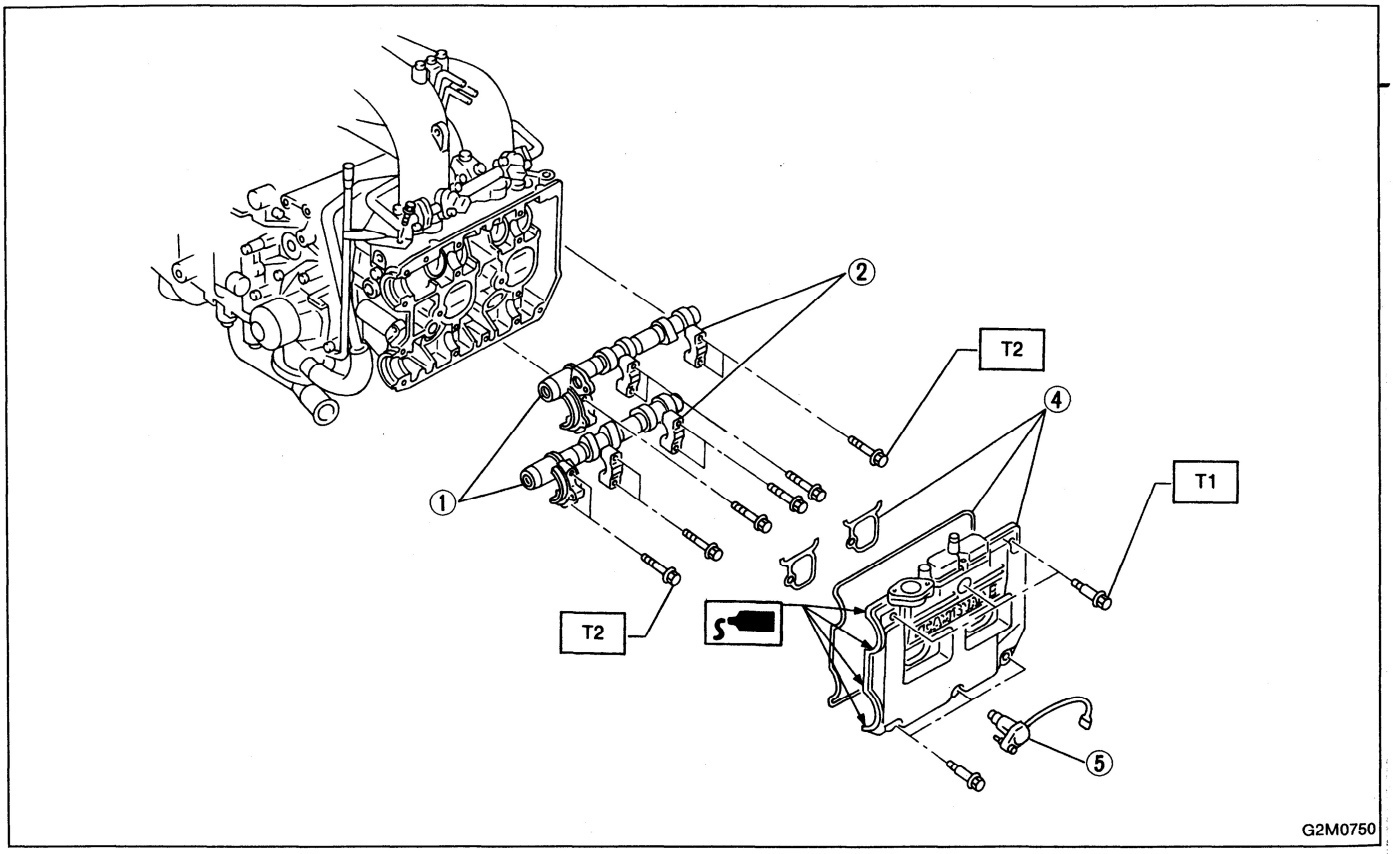

Tightening torque: N·m (kg-m, ft-lb)
T1: 10 ± 0.7 (1.0 ± 0.07, 7.2 ± 0.5)
T2: 20 ± 2 (2.0 ± 0.2, 14.5 ± 1.4)

GETtheMANUALS.org

2) Install camshaft sprockets, timing belt and related parts.
<Ref. to 2-3b [W2C0].>

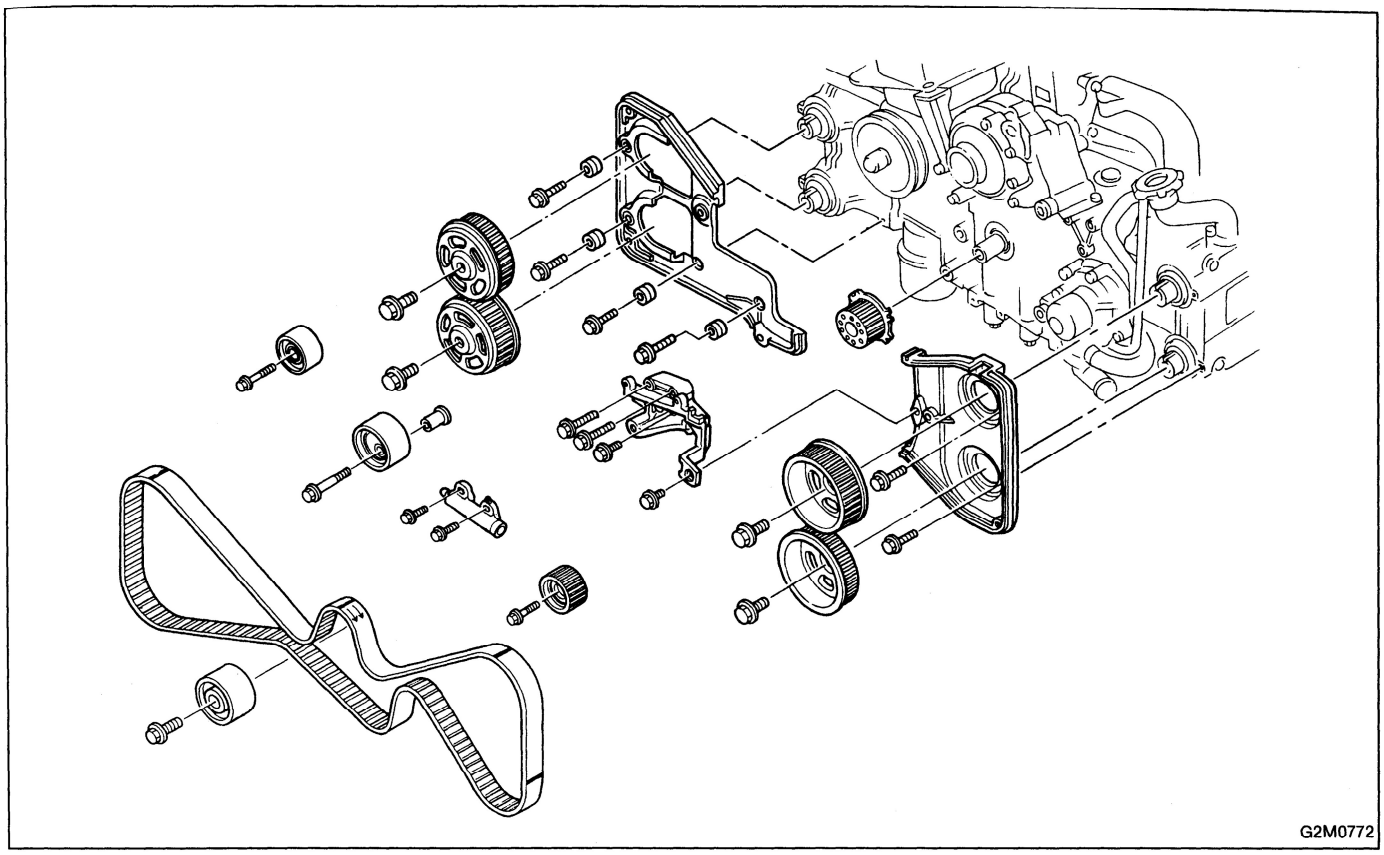
G2M0772

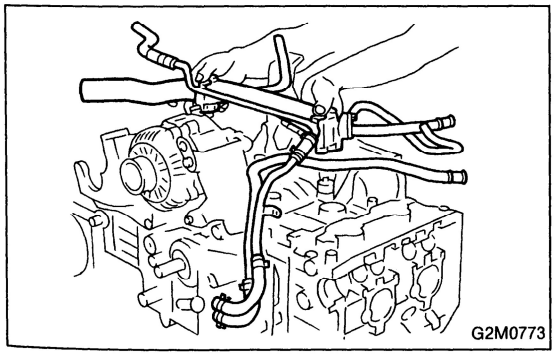
G2M0773

3) Install water pipe.
CAUTION:
Use new gaskets.

GETtheMANUALS.org

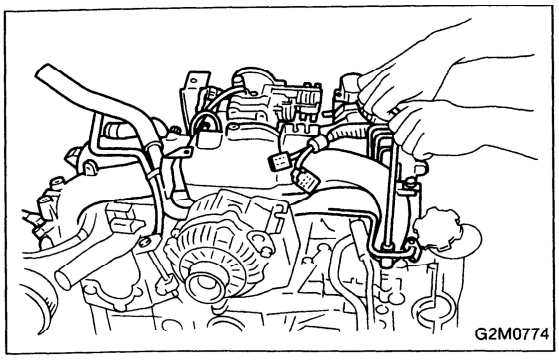

4) Install intake manifold.

CAUTION:
Use new gaskets.

5) Install coolant filler tank.
6) Install crankshaft position sensor, camshaft position sensor and knock sensor. Use dry compressed air to remove foreign particles before installing sensors.
7) Connect each connector and/or install connector bracket.
8) Connect hoses and tubes to cylinder block.
9) Install brackets, alternator and air conditioner compressor.
10) Install V-belt.

GETtheMANUALS.org

5. Cylinder Block

A: REMOVAL

1. RELATED PARTS

1) Remove timing belt, camshaft sprockets and related parts.
<Ref. to 2-3b [W2A0].>

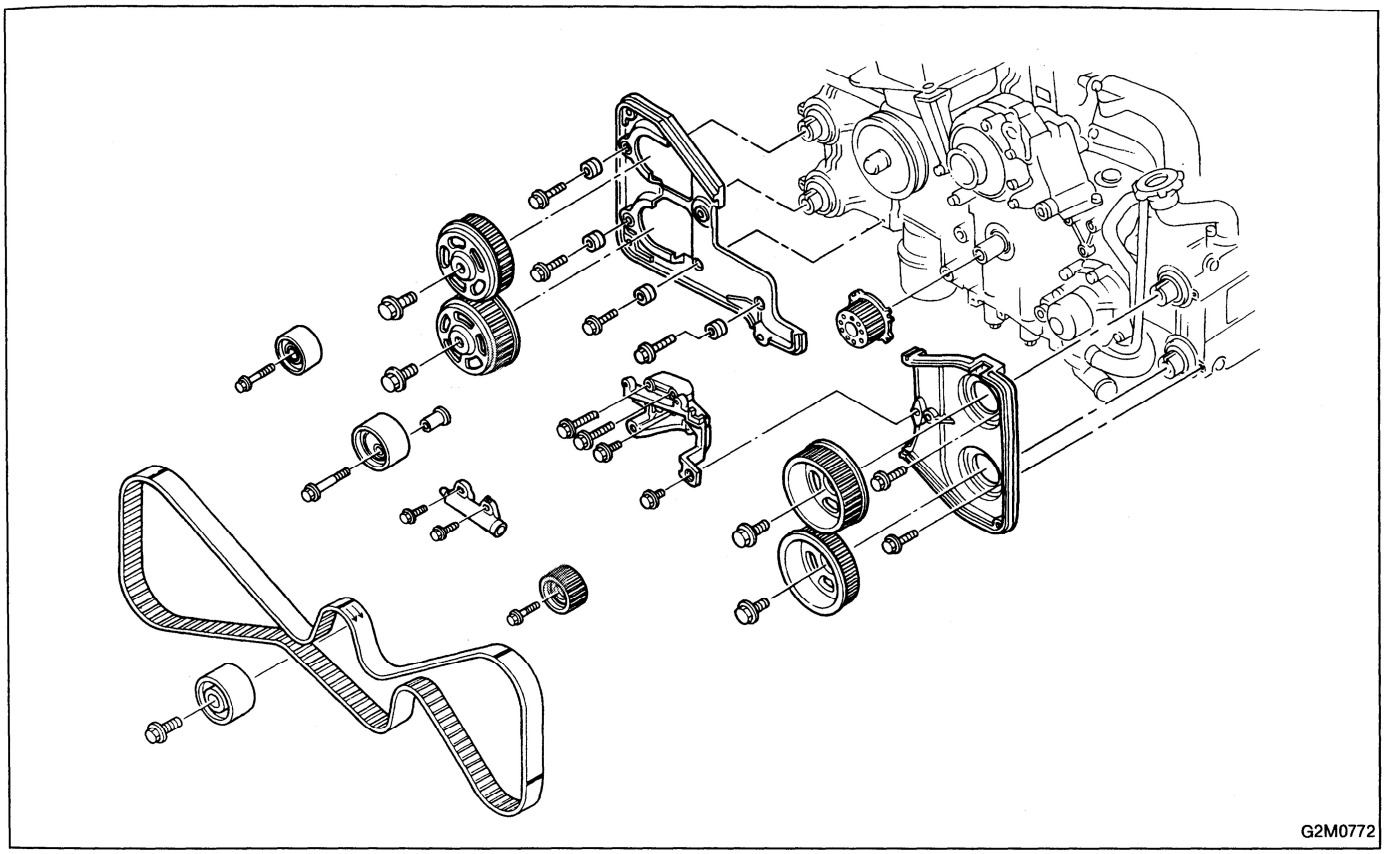

GETtheMANUALS.org

2) Remove cylinder head covers, camshafts and related parts.
<Ref. to 2-3b [W3A0].>

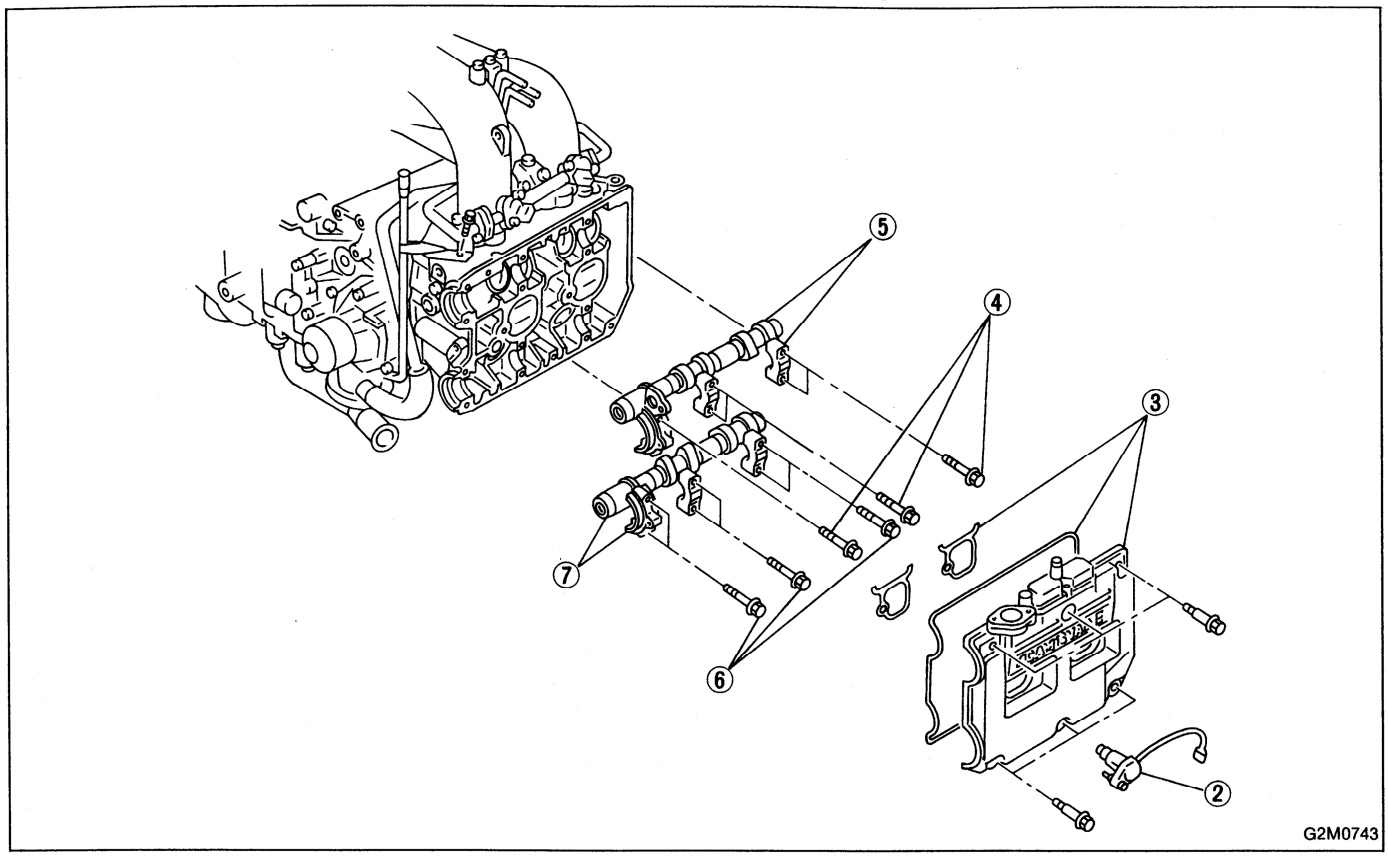

GETtheMANUALS.org

3) Remove cylinder heads.
<Ref. to 2-3b [W4A0].>

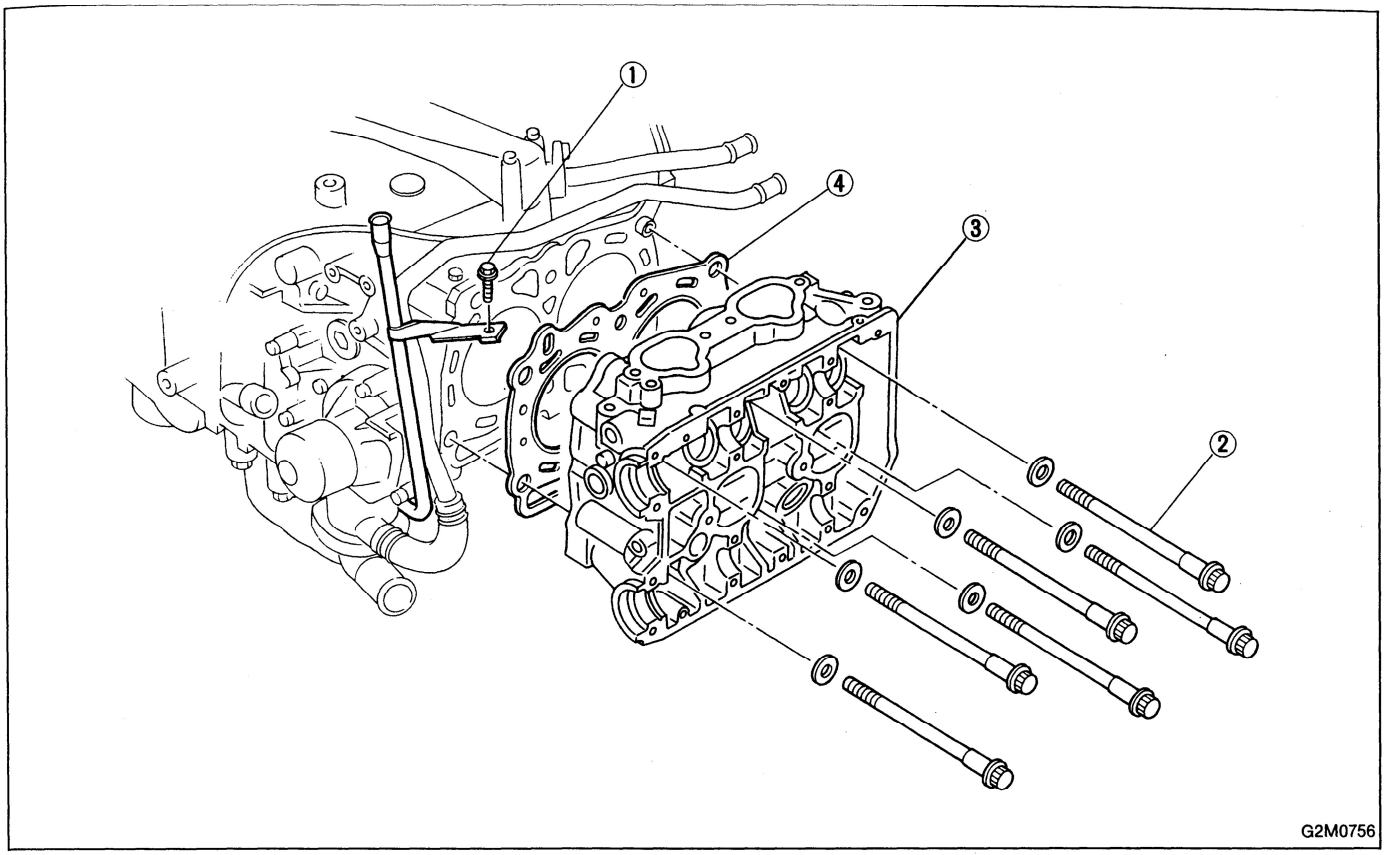

GETtheMANUALS.org

2. OIL PUMP AND ENGINE COOLANT PUMP

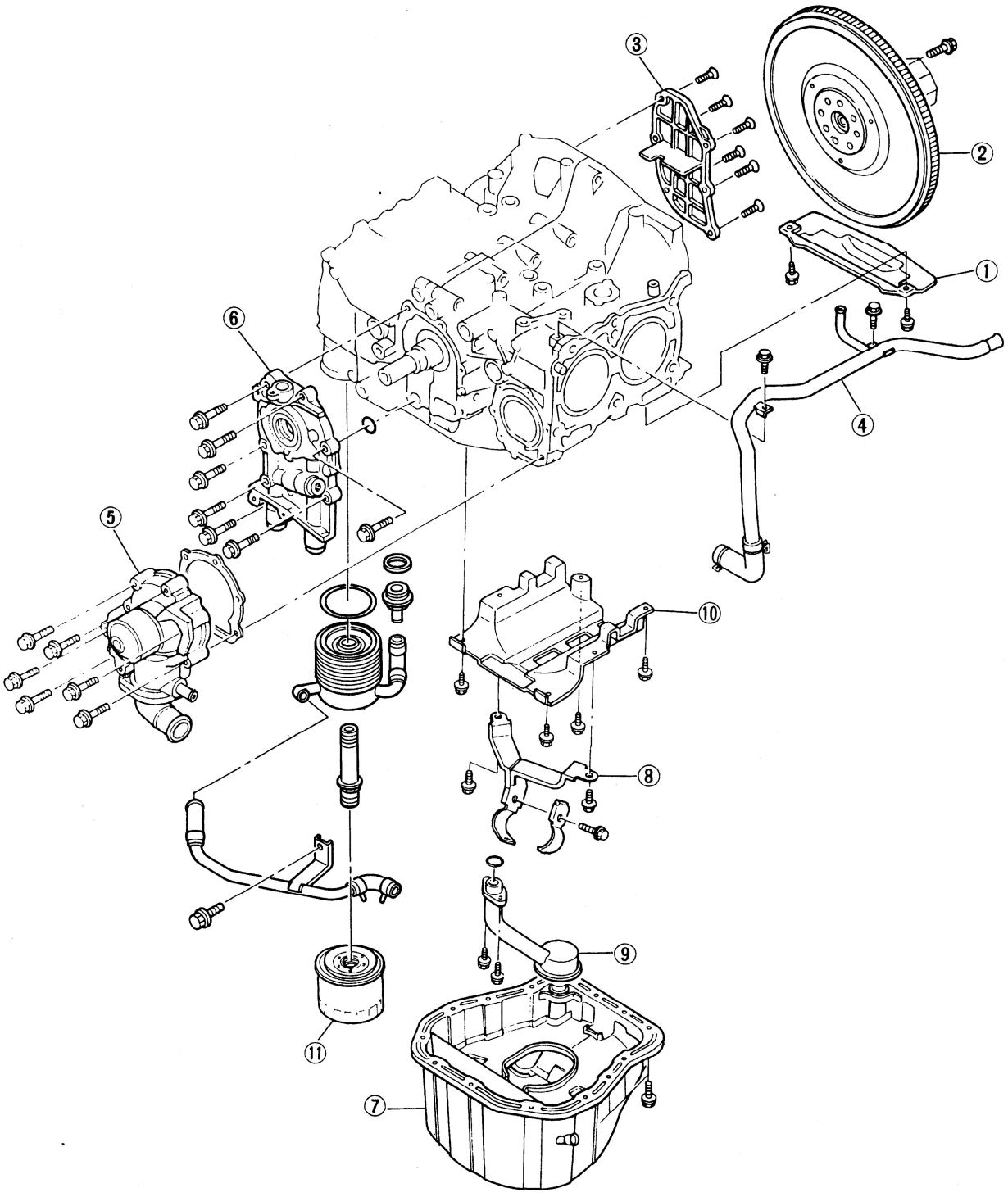

G2M0775

GETtheMANUALS.org

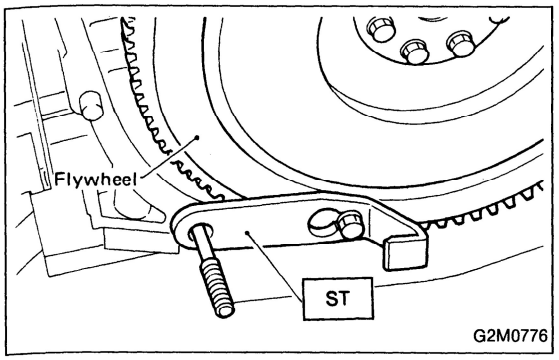

1) Remove housing cover.
2) Remove flywheel.

Using ST, lock crankshaft.

ST 498497100 CRANKSHAFT STOPPER

3) Remove oil separator cover.
4) Remove engine coolant pipe.
5) Remove engine coolant pump.

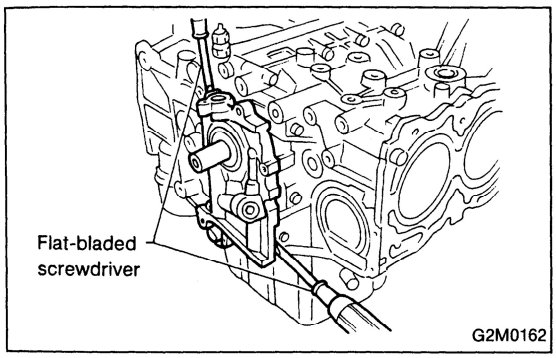

6) Remove oil pump from cylinder block.

Use a flat-bladed screwdriver as shown in figure when removing oil pump.

CAUTION:
Be careful not to scratch the mating surface of cylinder block and oil pump.

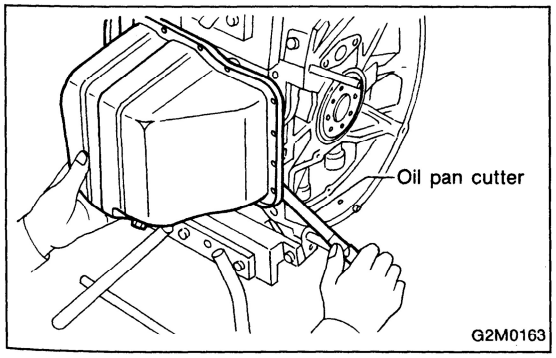

7) Removal of oil pan
   (1) Turn cylinder block with #2 and #4 piston sides facing upward.
   (2) Remove bolts which secure oil pan to cylinder block.
   (3) Insert a oil pan cutter blade between cylinder block-to-oil pan clearance and remove oil pan.

CAUTION:
Do not use a screwdriver or similar tool in place of oil pan cutter blade.

8) Remove oil strainer stay.
9) Remove oil strainer.

GETtheMANUALS.org

10) Remove baffle plate.

11) Remove oil filter.

12) Disconnect U-shaped hose from cylinder block.
13) Remove bolt which secure engine coolant pipe to cylinder block.

14) Remove connector pipe.

15) Remove oil cooler.
16) Remove engine coolant pipe from oil cooler.

GETtheMANUALS.org

B: DISASSEMBLY

1. PISTON PIN AND CYLINDER BLOCK CONNECTING BOLT

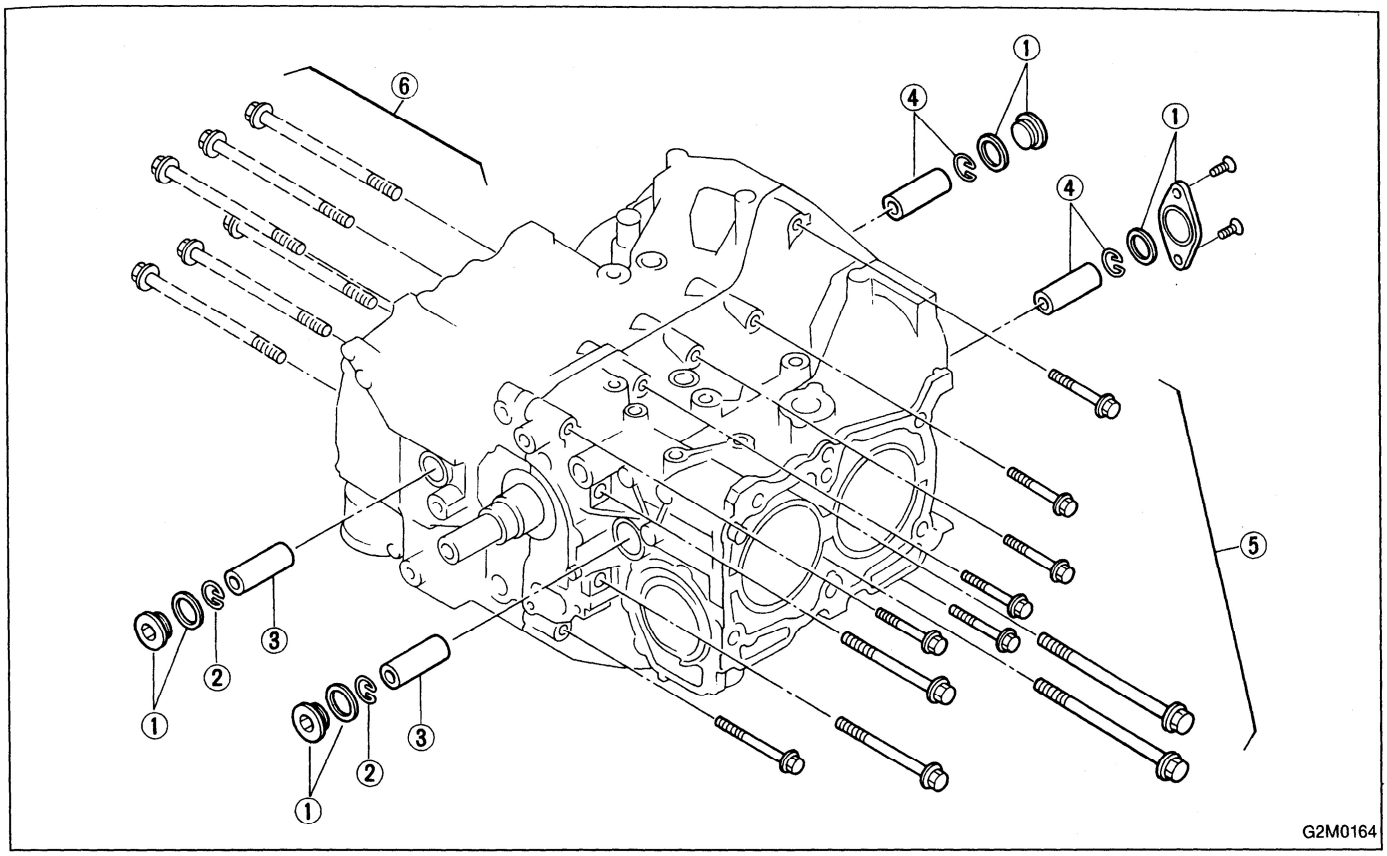

1) Remove service hole cover and service hole plugs using hexagon wrench (14 mm).

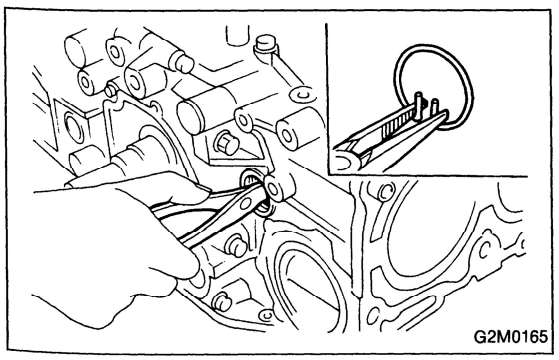

2) Rotate crankshaft to bring #1 and #2 pistons to BDC position, then remove piston circlip through service hole of #1 and #2 cylinders.

GETtheMANUALS.org

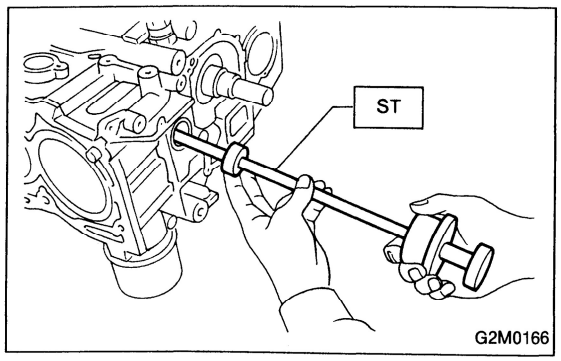

3) Draw out piston pin from #1 and #2 pistons by using ST.
ST 499097500 PISTON PIN REMOVER
CAUTION:
Be careful not to confuse original combination of piston, piston pin and cylinder.
4) Similarly remove piston pins from #3 and #4 pistons by using ST.

5) Remove bolts which connect cylinder block on the side of #2 and #4 cylinders.
6) Back off bolts which connect cylinder block on the side of #1 and #3 cylinders two or three turns.

GETtheMANUALS.org

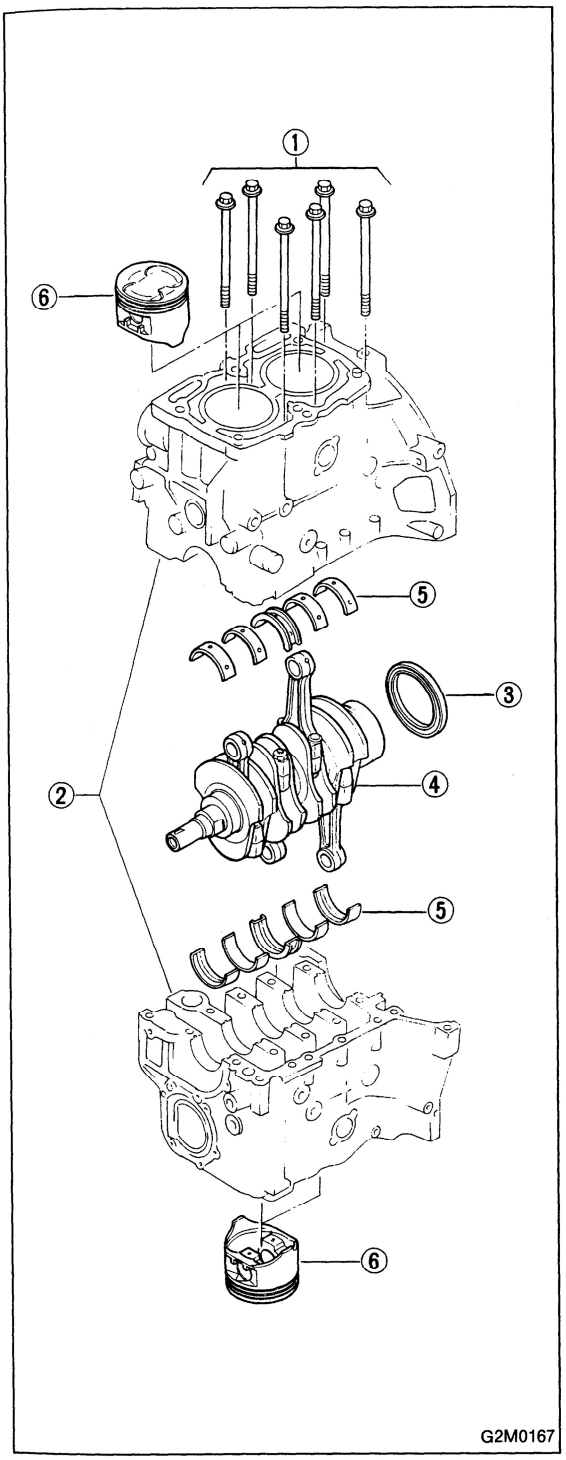

2. CYLINDER BLOCK

1) Set up cylinder block so that #1 and #3 cylinders are on the upper side, then remove cylinder block connecting bolts.
2) Separate left-hand and right-hand cylinder blocks.

CAUTION:
When separating cylinder block, do not allow the connecting rod to fall and damage the cylinder block.

3) Remove rear oil seal.
4) Remove crankshaft together with connecting rod.
5) Remove crankshaft bearings from cylinder block using hammer handle.

CAUTION:
Do not confuse combination of crankshaft bearings. Press bearing at the end opposite to locking lip.

6) Draw out each piston from cylinder block using wooden bar or hammer handle.

CAUTION:
Do not confuse combination of piston and cylinder.

GETtheMANUALS.org

3. CRANKSHAFT AND PISTON

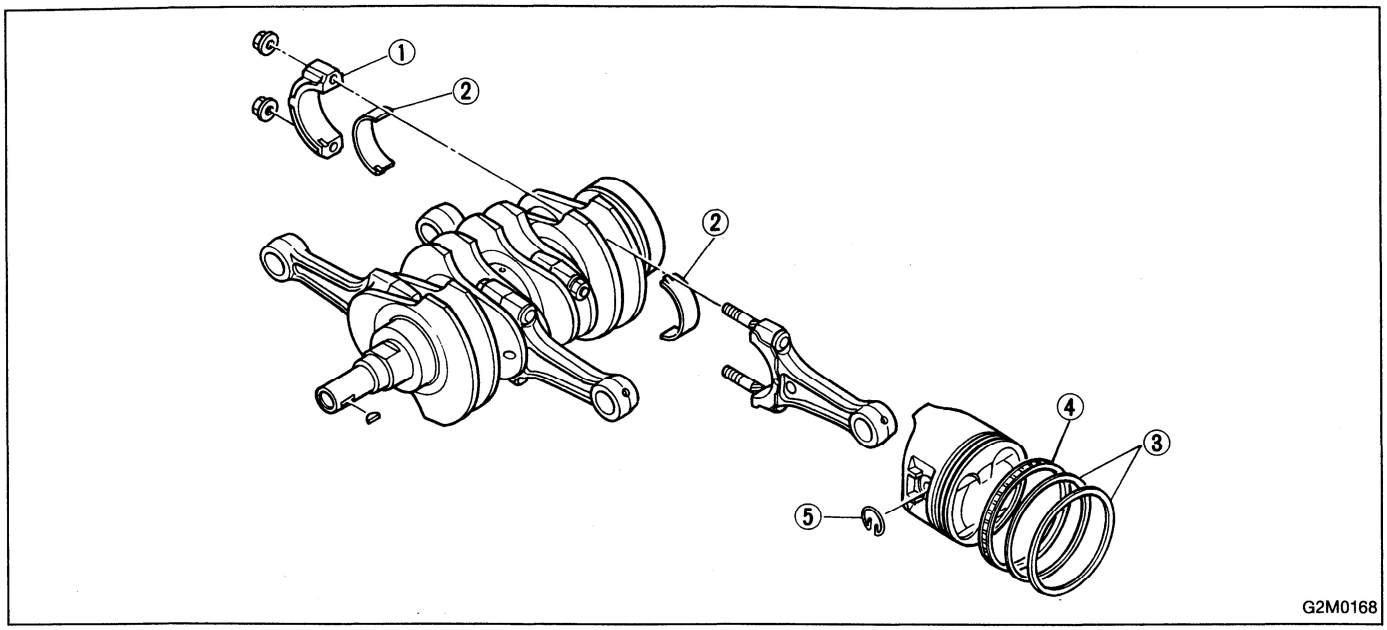

1) Remove connecting rod cap.
2) Remove connecting rod bearing.

CAUTION:
Arrange removed connecting rod, connecting rod cap and bearing in order to prevent confusion.

3) Remove piston rings using the piston ring expander.
4) Remove the oil ring by hand.

CAUTION:
Arrange the removed piston rings in good order to prevent confusion.

5) Remove circlip.

GETtheMANUALS.org

C: INSPECTION

1. CYLINDER BLOCK

1) Check for cracks and damage visually. Especially, inspect important parts by means of red check.
2) Check the oil passages for clogging.
3) Inspect crankcase surface that mates with cylinder head for warping by using a straight edge, and correct by grinding if necessary.

Warping limit:
0.05 mm (0.0020 in)

Grinding limit:
0.1 mm (0.004 in)

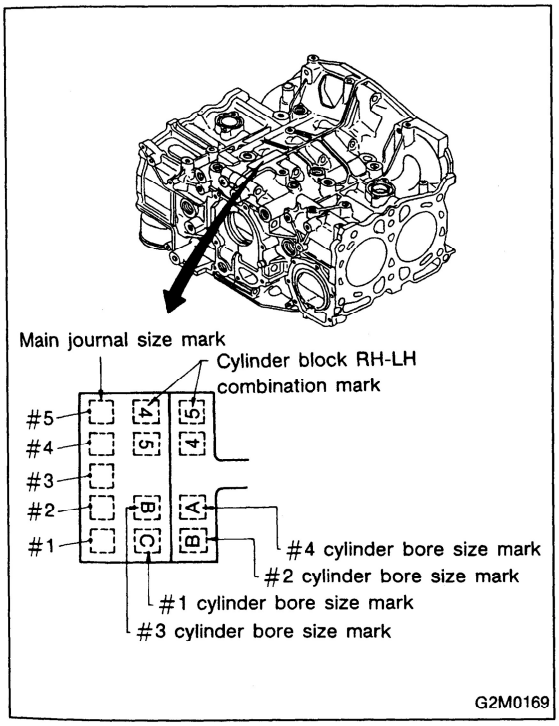

2. CYLINDER AND PISTON

1) The cylinder bore size is stamped on the cylinder block's front upper surface.
NOTE:
Standard sized pistons are classified into three grades, "A" and "B". These grades should be used as a guide line in selecting a standard piston.

Standard diameter:
A: 92.005 — 92.015 mm (3.6222 — 3.6226 in)
B: 91.995 — 92.005 mm (3.6218 — 3.6222 in)

GETtheMANUALS.org

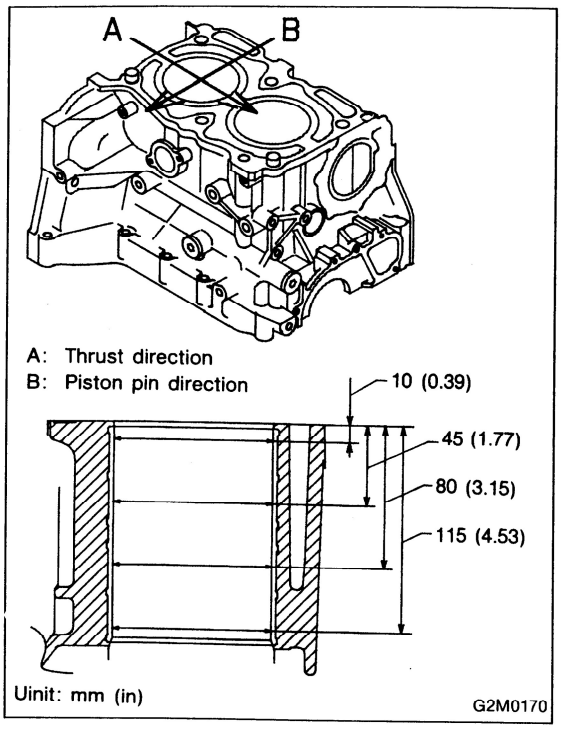

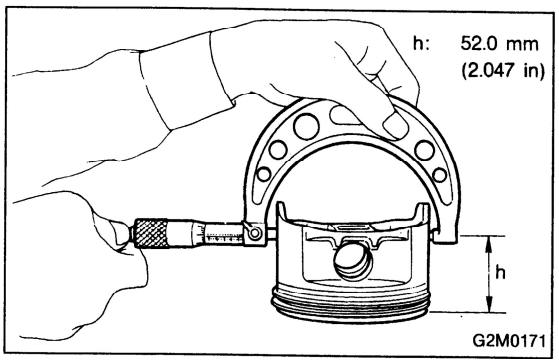

2) How to measure the inner diameter of each cylinder
Measure the inner diameter of each cylinder in both the thrust and piston pin directions at the heights shown in the figure, using a cylinder bore gauge.

CAUTION:
Measurement should be performed at a temperature 20°C (68°F).

Taper:
Standard
0.015 mm (0.0006 in)
Limit
0.050 mm (0.0020 in)

Out-of-roundness:
Standard
0.010 mm (0.0004 in)
Limit
0.050 mm (0.0020 in)

3) When piston is to be replaced due to general or cylinder wear, determine a suitable sized piston by measuring the piston clearance.

4) How to measure the outer diameter of each piston
Measure the outer diameter of each piston at the height shown in the figure. (Thrust direction)

CAUTION:
Measurement should be performed at a temperature of 20°C (68°F).

Piston outer diameter:
Standard
A: 91.985 — 91.995 mm (3.6214 — 3.6218 in)
B: 91.975 — 91.985 mm (3.6211 — 3.6214 in)
0.25 mm (0.0098 in) oversize
92.225 — 92.235 mm (3.6309 — 3.6313 in)
0.50 mm (0.0197 in) oversize
92.475 — 92.485 mm (3.6407 — 3.6411 in)

5) How to measure the clearance between cylinder and piston

CAUTION:
Measurement should be performed at a temperature of 20°C (68°F).

Cylinder to piston clearance at 20°C (68°F):
Standard
0.010 — 0.030 mm (0.0004 — 0.0012 in)
Limit
0.060 mm (0.0024 in)

GETtheMANUALS.org

6) Boring and honing
(1) If the value of taper, out-of-roundness, or cylinder-to-piston clearance measured exceeds the specified limit or if there is any damage on the cylinder wall, rebore it to use an oversize piston.

CAUTION:
When any of the cylinders needs reboring, all other cylinders must be bored at the same time, and use oversize pistons. Do not perform boring on one cylinder only, nor use an oversize piston for one cylinder only.

(2) If the cylinder inner diameter exceeds the limit after boring and honing, replace the crankcase.

CAUTION:
Immediately after reboring, the cylinder diameter may differ from its real diameter due to temperature rise. Thus, pay attention to this when measuring the cylinder diameter.

Limit of cylinder enlarging (boring):
0.5 mm (0.020 in)

GETtheMANUALS.org

3. PISTON AND PISTON PIN

1) Check pistons and piston pins for damage, cracks, and wear and the piston ring grooves for wear and damage. Replace if defective.

2) Measure the piston-to-cylinder clearance at each cylinder as instructed in 2. CYLINDER AND PISTON [W5C2]. If any of the clearances is not to specification, replace the piston or bore the cylinder to use an oversize piston.

3) Make sure that piston pin can be inserted into the piston pin hole with a thumb at 20°C (68°F). Replace if defective.

Standard clearance between piston pin and hole in piston:

0.001 — 0.013 mm (0.00004 — 0.00051 in)

Standard clearance between piston pin and hole in connecting rod:

0 — 0.022 mm (0 — 0.0009 in)

GETtheMANUALS.org

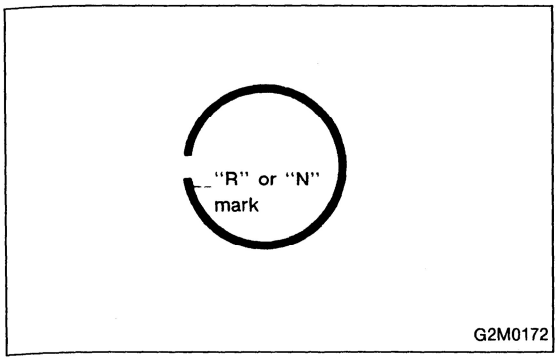

4. PISTON RING

1) If piston ring is broken, damaged, or worn, or if its tension is insufficient, or when the piston is replaced, replace piston ring with a new one of the same size as the piston.

CAUTION:

• "R" or "N" is marked on the end of the top and second rings. When installing the rings to the piston, face this mark upward.

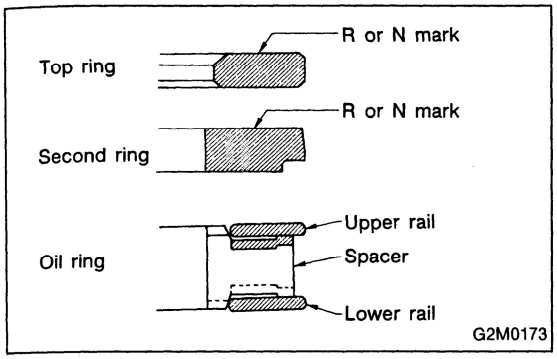

• The oil ring is a combined ring consisting of two rails and a spacer in between. When installing, be careful to assemble correctly.

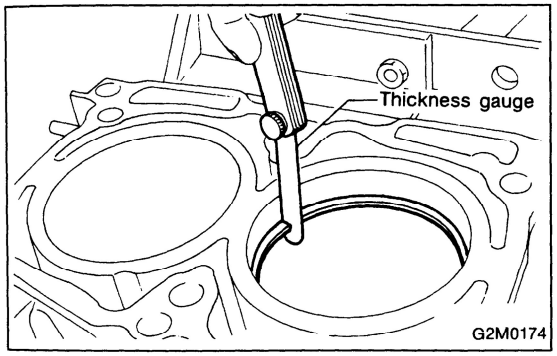

2) Squarely place piston ring and oil ring in cylinder, and measure the piston ring gap with a thickness gauge.

Unit: mm (in)

		Standard	Limit
Piston ring gap	Top ring	0.20 — 0.26 (0.0079 — 0.0102)	0.5 (0.020)
	Second ring	0.37 — 0.52 (0.0146 — 0.0205)	1.0 (0.039)
	Oil ring rail	0.20 — 0.70 (0.0079 — 0.0276)	1.5 (0.059)

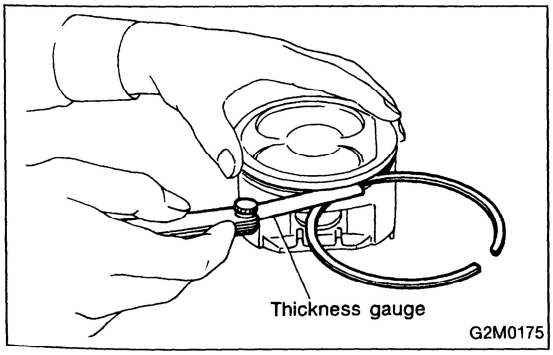

3) Measure the clearance between piston ring and piston ring groove with a thickness gauge.

CAUTION:

Before measuring the clearance, clean the piston ring groove and piston ring.

Unit: mm (in)

		Standard	Limit
Clearance between piston ring and piston ring groove	Top ring	0.04 — 0.08 (0.0016 — 0.0031)	0.15 (0.0059)
	Second ring	0.03 — 0.07 (0.0012 — 0.0028)	0.15 (0.0059)

GETtheMANUALS.org

5. CONNECTING ROD

1) Replace connecting rod, if the large or small end thrust surface is damaged.

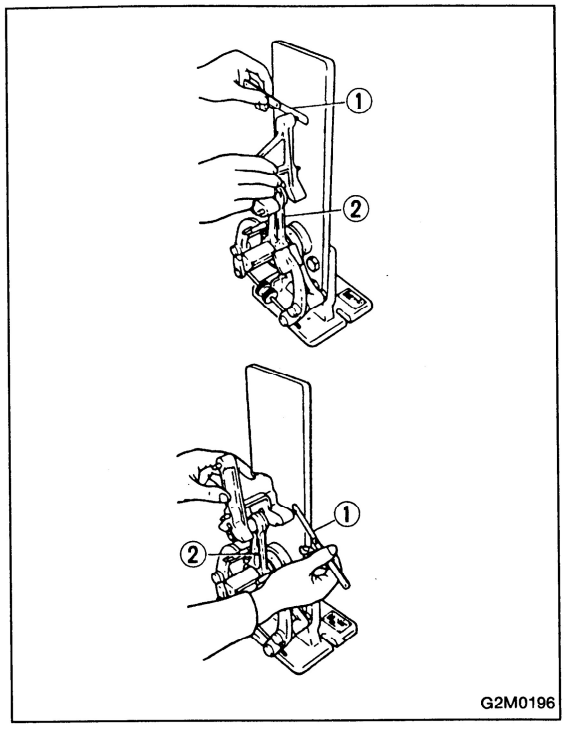

2) Check for bend or twist using a connecting rod aligner. Replace connecting rod if the bend or twist exceeds the limit.

Limit of bend or twist per 100 mm (3.94 in) in length:
0.10 mm (0.0039 in)

① Thickness gauge
② Connecting rod

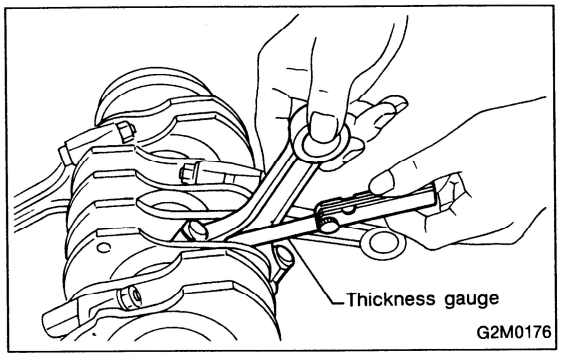

3) Install connecting rod fitted with bearing to crankshaft and measure the side clearance (thrust clearance). Replace connecting rod if the side clearance exceeds the specified limit.

Connecting rod side clearance:
Standard
0.070 — 0.330 mm (0.0028 — 0.0130 in)
Limit
0.4 mm (0.016 in)

4) Inspect connecting rod bearing for scar, peeling, seizure, melting, wear, etc.

GETtheMANUALS.org

5) Measure the oil clearance on individual connecting rod bearings by means of plastigauge. If any oil clearance is not within specification, replace the defective bearing with a new one of standard size or undersize as necessary. (See the table below.)

Connecting rod oil clearance:

Standard

0.0158 — 0.0438 mm (0.0006 — 0.0017 in)

Limit

0.05 mm (0.0020 in)

Unit: mm (in)

Bearing	Bearing size (Thickness at center)	Outer diameter of crank pin
Standard	1.492 — 1.501 (0.0587 — 0.0591)	51.984 — 52.000 (2.0466 — 2.0472)
0.03 (0.0012) undersize	1.510 — 1.513 (0.0594 — 0.0596)	51.954 — 51.970 (2.0454 — 2.0461)
0.05 (0.0020) undersize	1.520 — 1.523 (0.0598 — 0.0600)	51.934 — 51.950 (2.0446 — 2.0453)
0.25 (0.0098) undersize	1.620 — 1.623 (0.0638 — 0.0639)	51.734 — 51.750 (2.0368 — 2.0374)

6) Inspect bushing at connecting rod small end, and replace if worn or damaged. Also measure the piston pin clearance at the connecting rod small end.

Clearance between piston pin and bushing:

Standard

0 — 0.022 mm (0 — 0.0009 in)

Limit

0.030 mm (0.0012 in)

GETtheMANUALS.org

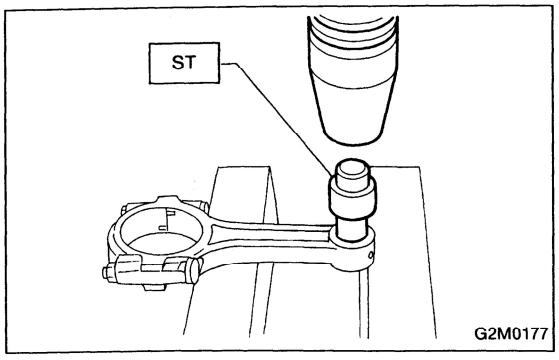

7) Replacement procedure is as follows:
(1) Remove bushing from connecting rod with ST and press.
(2) Press bushing with ST after applying oil on the periphery of bushing.

ST 499037100 CONNECTING ROD BUSHING REMOVER AND INSTALLER

(3) Make two 3 mm (0.12 in) holes in bushing. Ream the inside of bushing.
(4) After completion of reaming, clean bushing to remove chips.

6. CRANKSHAFT AND CRANKSHAFT BEARING

1) Clean crankshaft completely and check for cracks by means of red check etc., and replace if defective.

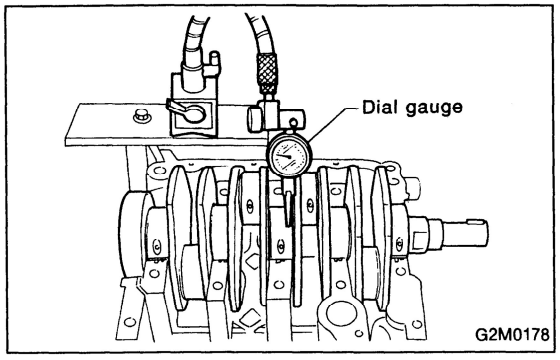

2) Measure the crankshaft bend, and correct or replace if it exceeds the limit.

CAUTION:
If a suitable V-block is not available, install #1 and #5 crankshaft bearing on cylinder block, position crankshaft on these bearings and measure crankshaft bend using a dial gauge.

Crankshaft bend limit:
0.035 mm (0.0014 in)

GETtheMANUALS.org

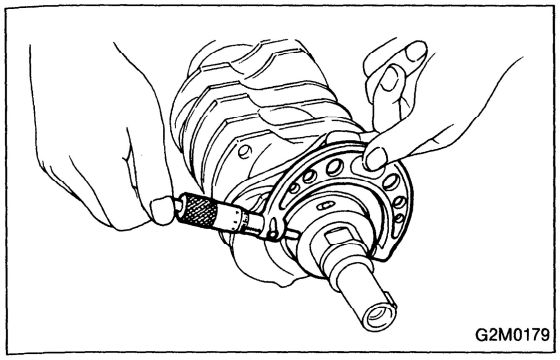
G2M0179

3) Inspect the crank journal and crank pin for wear. If not to specifications, replace bearing with an undersize one, and replace or recondition crankshaft as necessary. When grinding crank journal or crank pin, finish them to the specified dimensions according to the undersize bearing to be used.

Crank pin and crank journal:
Out-of-roundness
0.03 mm (0.0012 in) or less
Taper limit
0.07 mm (0.0028 in)
Grinding limit
0.25 mm (0.0098 in)

Unit: mm (in)

		Crank journal			Crank pin O.D.
		#1, #5	#2, #4	#3	
Standard	Journal O.D.	59.984 — 60.000 (2.3616 — 2.3622)	59.984 — 60.000 (2.3616 — 2.3622)	59.984 — 60.000 (2.3616 — 2.3622)	51.984 — 52.000 (2.0466 — 2.0472)
	Bearing size (Thickness at center)	1.998 — 2.011 (0.0787 — 0.0792)	2.000 — 2.013 (0.0787 — 0.0793)	2.000 — 2.013 (0.0787 — 0.0793)	1.492 — 1.510 (0.0587 — 0.0594)
0.03 (0.0012) undersize	Journal O.D.	59.954 — 59.970 (2.3604 — 2.3610)	←	←	51.954 — 51.970 (2.0454 — 2.0461)
	Bearing size (Thickness at center)	2.017 — 2.020 (0.0794 — 0.0795)	2.019 — 2.022 (0.0795 — 0.0796)	2.019 — 2.022 (0.0795 — 0.0796)	1.510 — 1.513 (0.0594 — 0.0596)
0.05 (0.0020) undersize	Journal O.D.	59.934 — 59.950 (2.3596 — 2.3602)	←	←	51.934 — 51.950 (2.0446 — 2.0453)
	Bearing size (Thickness at center)	2.027 — 2.030 (0.0798 — 0.0799)	2.029 — 2.032 (0.0799 — 0.0800)	2.029 — 2.032 (0.0799 — 0.0800)	1.520 — 1.523 (0.0598 — 0.0600)
0.25 (0.0098) undersize	Journal O.D.	59.734 — 59.750 (2.3517 — 2.3524)	←	←	51.734 — 51.750 (2.0368 — 2.0374)
	Bearing size (Thickness at center)	2.127 — 2.130 (0.0837 — 0.0839)	2.129 — 2.132 (0.0838 — 0.0839)	2.129 — 2.132 (0.0838 — 0.0839)	1.620 — 1.623 (0.0638 — 0.0639)

O.D. ... Outer diameter

GETtheMANUALS.org

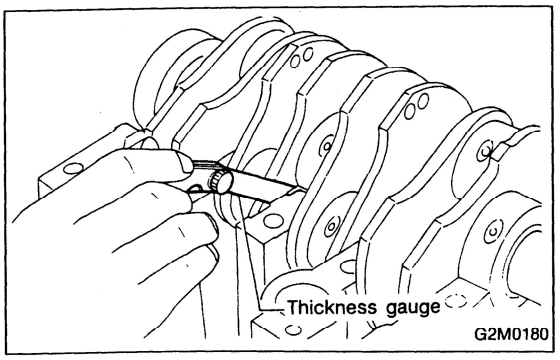

4) Measure the thrust clearance of crankshaft at center bearing. If the clearance exceeds the limit, replace bearing.

Crankshaft thrust clearance:
Standard
0.030 — 0.115 mm (0.0012 — 0.0045 in)
Limit
0.25 mm (0.0098 in)

5) Inspect individual crankshaft bearings for signs of flaking, seizure, melting, and wear.
6) Measure the oil clearance on each crankshaft bearing by means of plastigauge. If the measurement is not within the specification, replace defective bearing with an undersize one, and replace or recondition crankshaft as necessary.

Unit: mm (in)

Crankshaft oil clearance		
Standard	#1, #5	0.010 — 0.030 (0.0004 — 0.0012)
	#2, #3, #4	0.010 — 0.030 (0.0004 — 0.0012)
Limit	#1, #5	0.040 (0.0016)
	#2, #3, #4	0.035 (0.0014)

GETtheMANUALS.org

D: ASSEMBLY

1. CRANKSHAFT AND PISTON

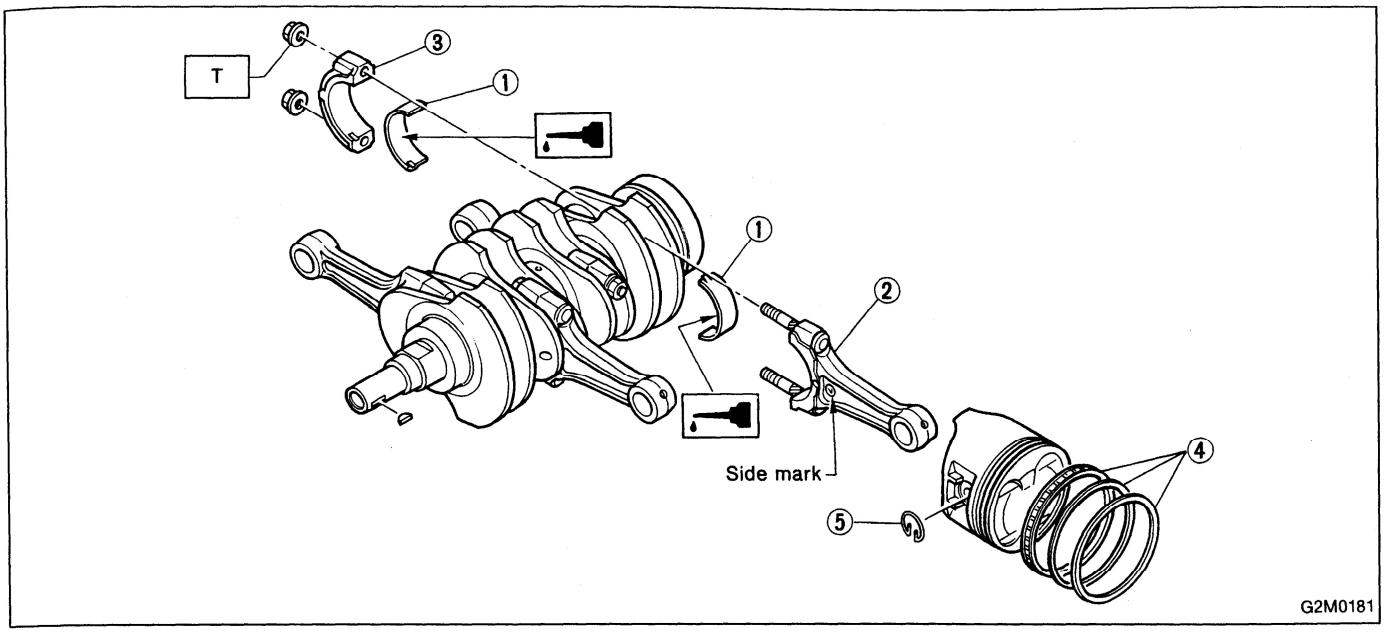

Tightening torque: N·m (kg-m, ft-lb)
T: 44.6 ± 1.5 (4.55 ± 0.15, 32.9 ± 1.1)

1) Install connecting rod bearings on connecting rods and connecting rod caps.

CAUTION:
Apply oil to the surfaces of the connecting rod bearings.

2) Install connecting rod on crankshaft.

CAUTION:
Position each connecting rod with the side marked facing forward.

3) Install connecting rod cap with connecting rod nut.
Ensure the arrow on connecting rod cap faces the front during installation.

CAUTION:
- **Each connecting rod has its own mating cap. Make sure that they are assembled correctly by checking their matching number.**
- **When tightening the connecting rod nuts, apply oil on the threads.**

GETtheMANUALS.org

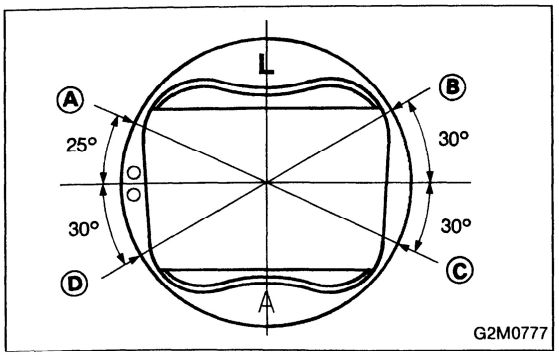

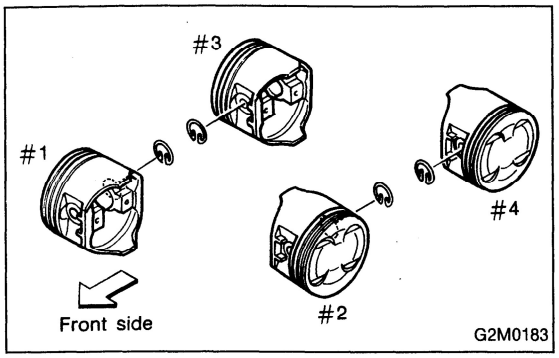

4) Installation of piston rings and oil ring
   (1) Install oil ring spacer, upper rail and lower rail in this order by hand. Then install second ring and top ring with a piston ring expander.
   (2) Position the gaps of the piston rings and oil ring as shown in the figure.

Ⓐ : Oil ring lower rail
Ⓑ : Oil ring upper rail
Ⓒ : Top ring
Ⓓ : Second ring

5) Install circlip.
Install circlips in piston holes located opposite service holes in cylinder block, when positioning all pistons in the corresponding cylinders.

GETtheMANUALS.org

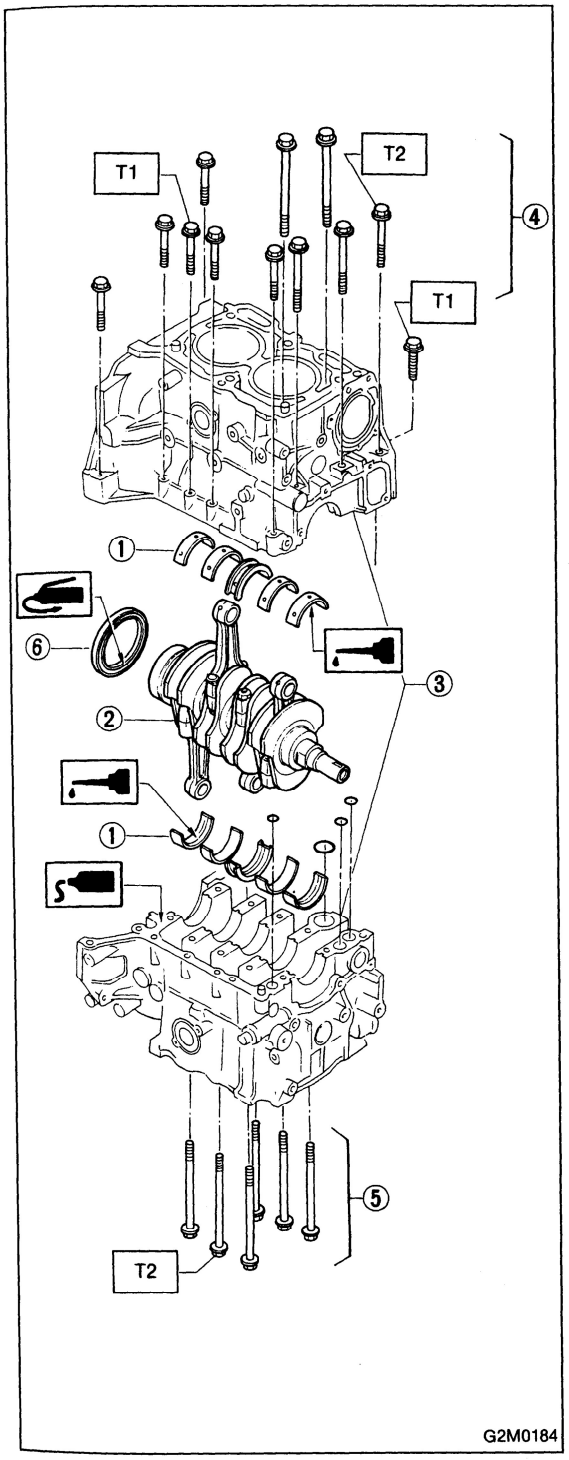

2. CYLINDER BLOCK

1) Install ST to cylinder block, then install crankshaft bearings.

ST 499817000 ENGINE STAND

CAUTION:

Remove oil the mating surface of bearing and cylinder block before installation. Also apply a coat of engine oil to crankshaft pins.

2) Position crankshaft on the #2 and #4 cylinder block.

Tightening torque:

T1: 25 ± 5 N·m (2.5 ± 0.5 kg-m, 18.1 ± 3.6 ft-lb)

T2: 47 ± 3 N·m (4.8 ± 0.3 kg-m, 34.7 ± 2.2 ft-lb)

GETtheMANUALS.org

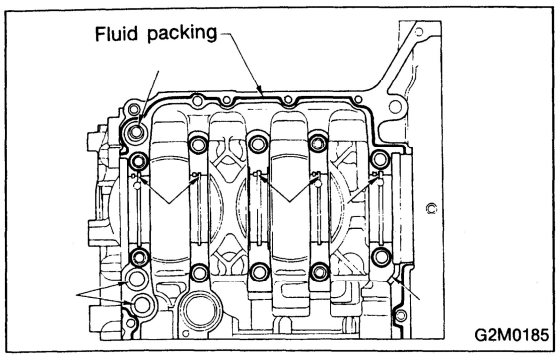

3) Apply fluid packing to the mating surface of #1 and #3 cylinder block, and position it on #2 and #4 cylinder block.

Fluid packing:
THREE BOND 1215 or equivalent

CAUTION:
Do not allow fluid packing to jut into O-ring grooves, oil passages, bearing grooves, etc.

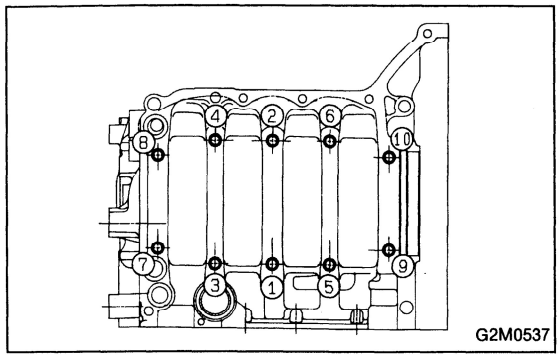

4) Temporarily tighten 10 mm cylinder block connecting bolts in numerical order shown in figure.
5) Tighten 10 mm cylinder block connecting bolts in numerical order.

Tightening torque:
47 ± 3 N·m (4.8 ± 0.3 kg-m, 34.7 ± 2.2 ft-lb)

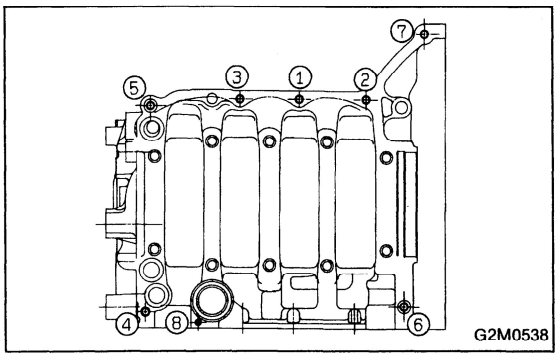

6) Tighten 8 mm and 6 mm cylinder block connecting bolts in numerical order shown in figure.

Tightening torque:
① — ⑦ : 25 ± 2 N·m (2.5 ± 0.2 kg-m, 18.1 ± 1.4 ft-lb)
⑧ : 6.4 N·m (0.65 kg-m, 4.7 ft-lb)

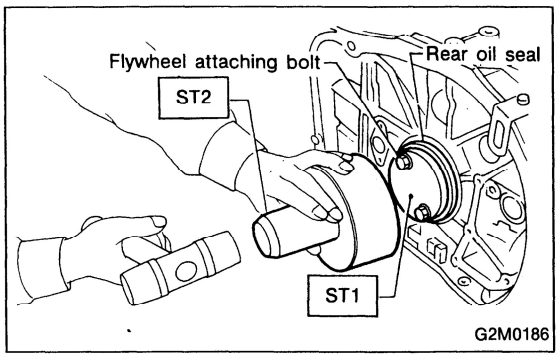

7) Install rear oil seal by using ST1 and ST2.
ST1 499597100 OIL SEAL GUIDE
ST2 499587200 OIL SEAL INSTALLER

GETtheMANUALS.org

3. PISTON AND PISTON PIN (#1 AND #2)

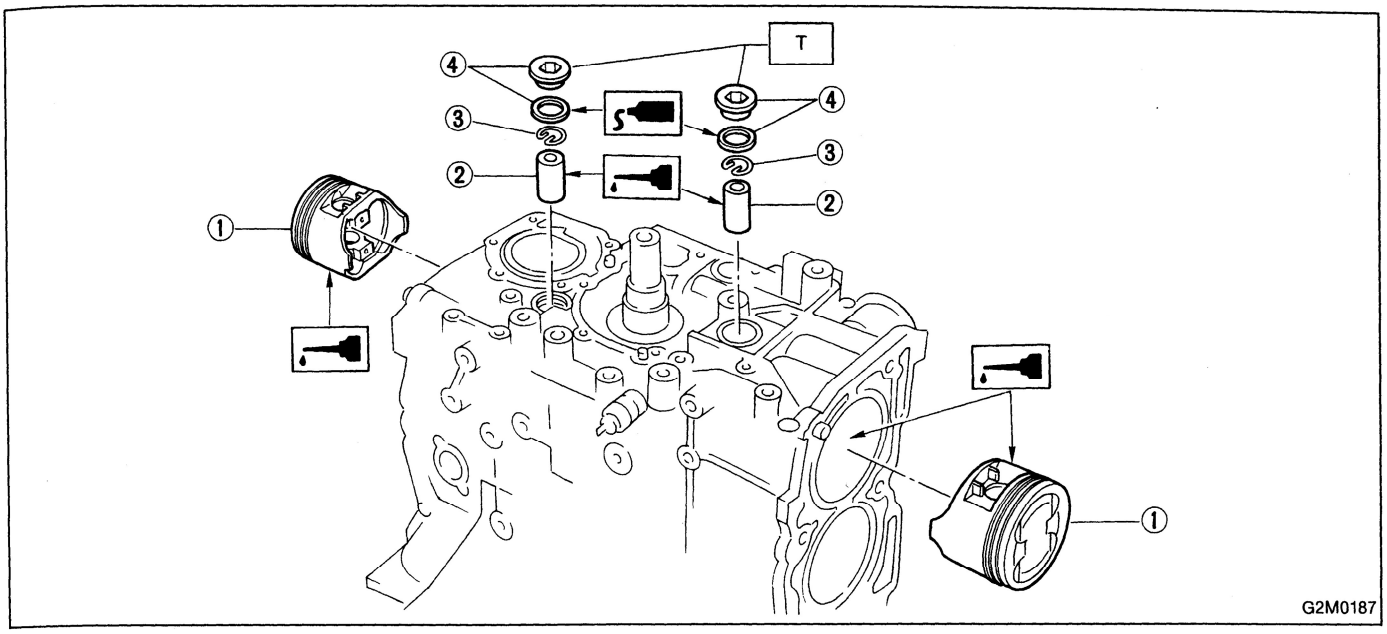

Tightening torque: N·m (kg-m, ft-lb)
T: 69 ± 7 (7.0 ± 0.7, 50.6 ± 5.1)

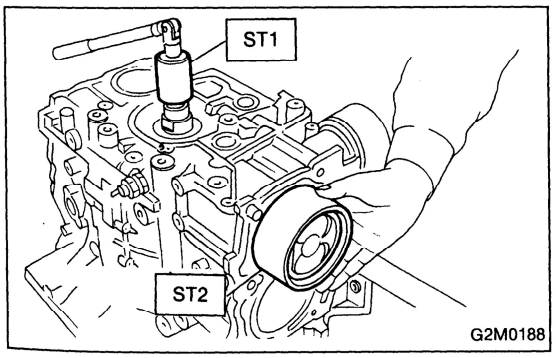

1) Installing piston
   (1) Turn cylinder block so that #1 and #2 cylinders face upward.
   (2) Using ST1, turn crankshaft so that #1 and #2 connecting rods are set at bottom dead center.

ST1 499987500 CRANKSHAFT SOCKET

   (3) Apply a coat of engine oil to pistons and cylinders and insert pistons in their cylinders by using ST2.

ST2 498747300 PISTON GUIDE

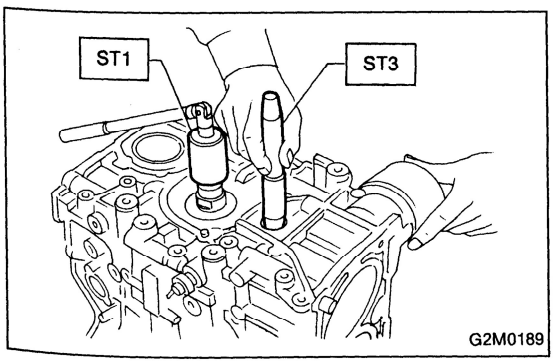

2) Installing piston pin
   (1) Insert ST3 into service hole to align piston pin hole with connecting rod small end.

CAUTION:
Apply a coat of engine oil to ST3 before insertion.

ST3 499017100 PISTON PIN GUIDE

GETtheMANUALS.org

(2) Apply a coat of engine oil to piston pin and insert piston pin into piston and connecting rod through service hole.

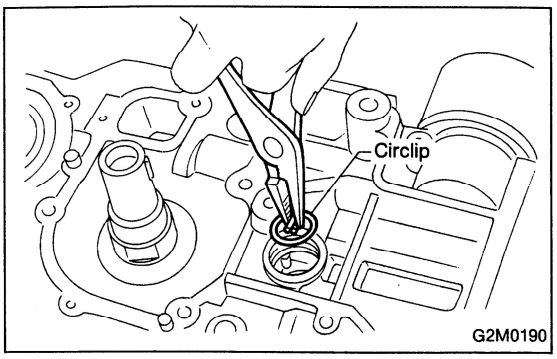

3) Install circlip.
CAUTION:
Use a new circlip.

4) Install service hole plug and gasket.
CAUTION:
Use a new gasket and apply a coat of fluid packing to it before installation.
Fluid packing:
THREE BOND 1215

GETtheMANUALS.org

4. PISTON AND PISTON PIN (#3 AND #4)

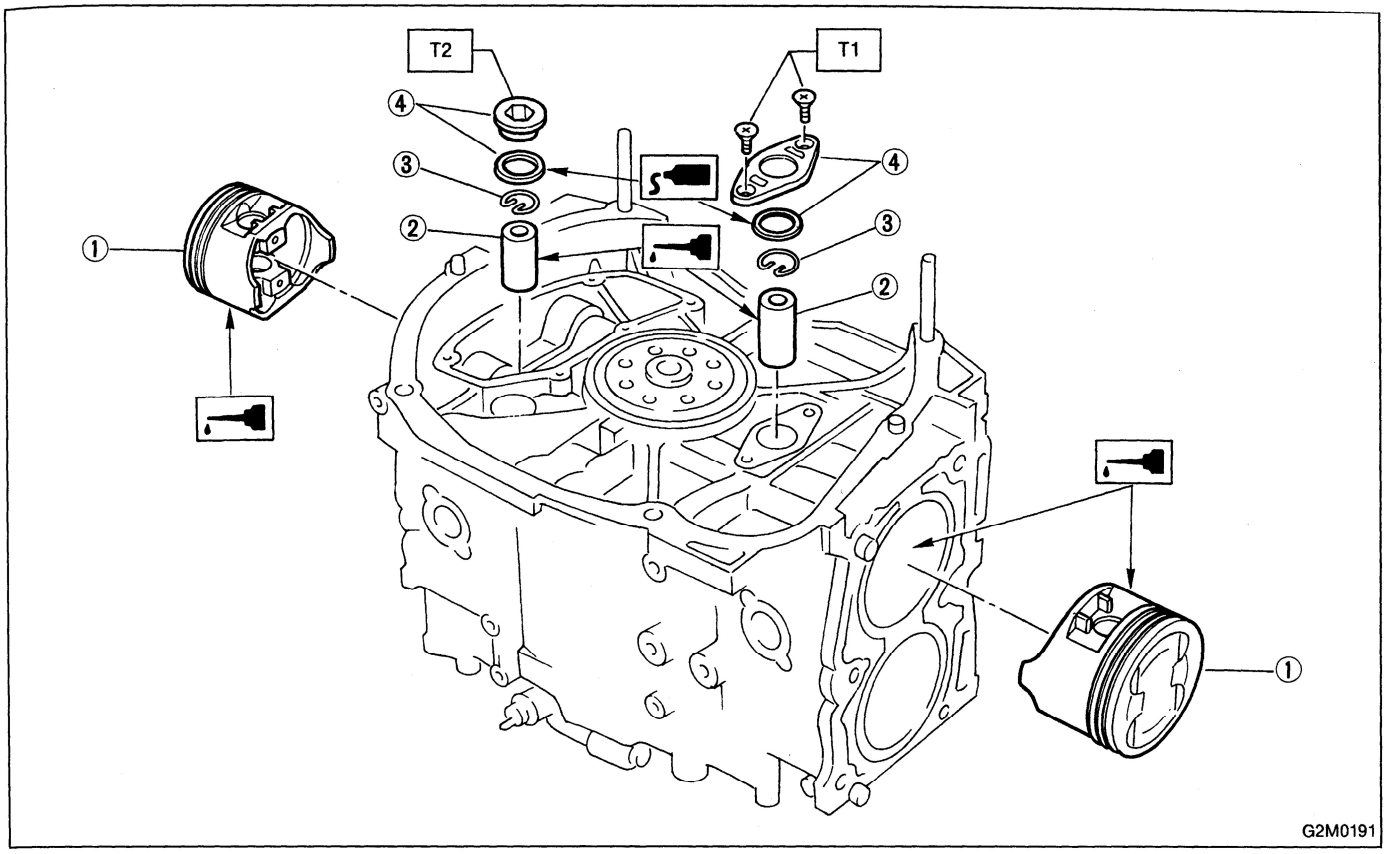

Tightening torque: N·m (kg-m, ft-lb)
T1: 6.4 (0.65, 4.7)
T2: 69 ± 7 (7.0 ± 0.7, 50.6 ± 5.1)

Turn cylinder block so that #3 and #4 cylinders face upward. Using the same procedures as used for #1 and #2 cylinders, install pistons and piston pins.

GETtheMANUALS.org

E: INSTALLATION

1. OIL PUMP AND ENGINE COOLANT PUMP

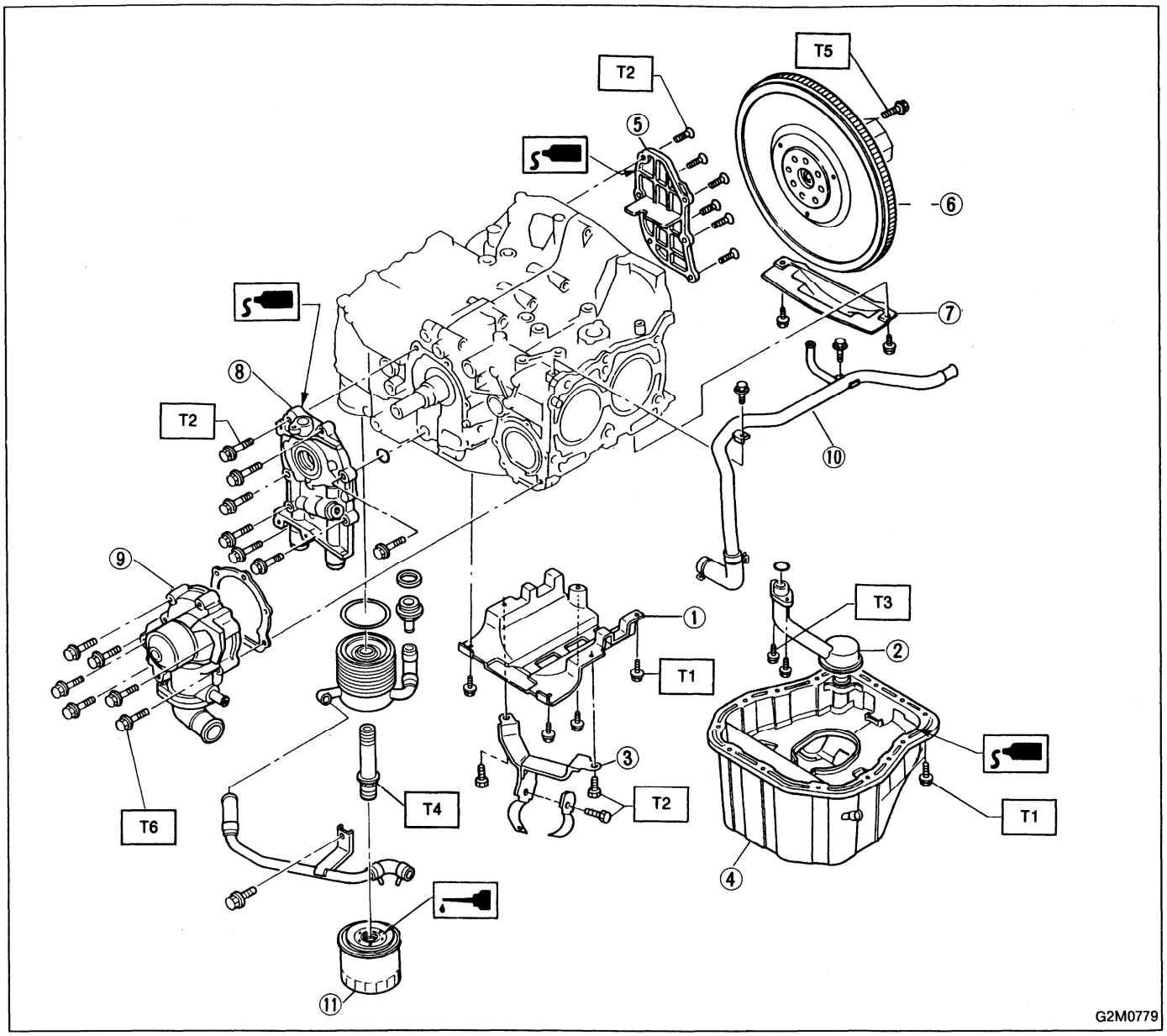

Tightening torque: N·m (kg-m, ft-lb)

T1: 5 (0.5, 3.6)
T2: 6.4 (0.65, 4.7)
T3: 10 (1.0, 7)
T4: 54 ± 5 (5.5 ± 0.5, 39.8 ± 3.6)
T5: 72 ± 3 (7.3 ± 0.3, 52.8 ± 2.2)
T6: First 12 ± 2 (1.2 ± 0.2, 8.7 ± 1.4)
Second 12 ± 2 (1.2 ± 0.2, 8.7 ± 1.4)

GETtheMANUALS.org

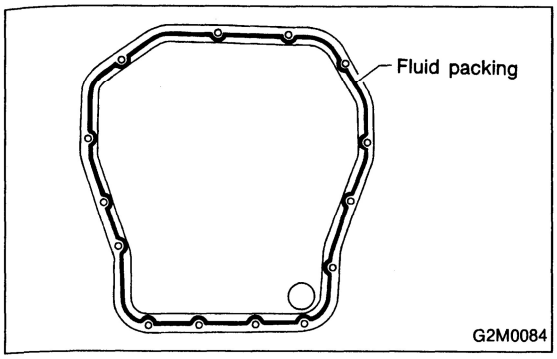

1) Install baffle plate.
2) Install oil strainer and O-ring
3) Install oil strainer stay.
4) Apply fluid packing to matching surfaces and install oil pan.

Fluid packing:
THREE BOND 1215 or equivalent

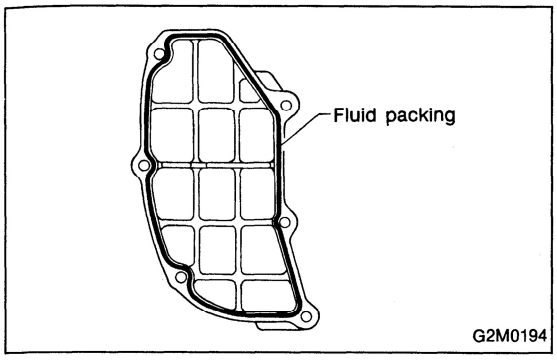

5) Apply fluid packing to matching surfaces and install oil separator cover.

Fluid packing:
THREE BOND 1215 or equivalent

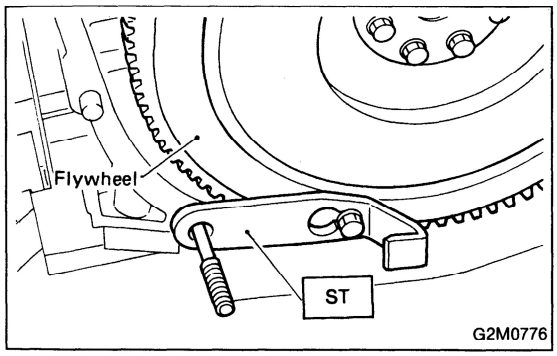

6) Install flywheel. Set ST, and tighten retaining bolts.
ST 498497100 CRANKSHAFT STOPPER
7) Install housing cover.

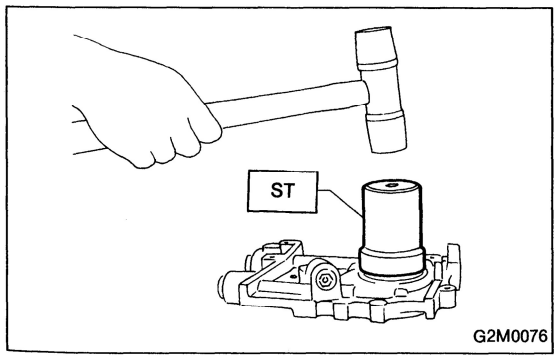

8) Installation of oil pump
(1) Discard front oil seal after removal. Replace with a new one by using ST.
ST 499587100 OIL SEAL INSTALLER

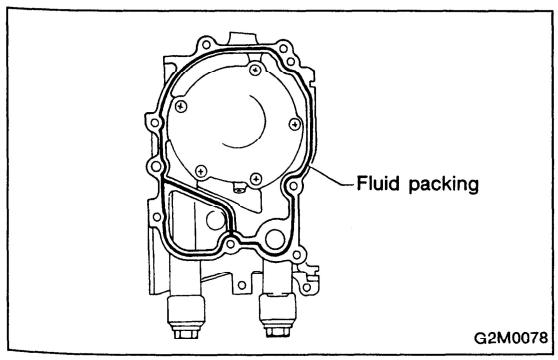

(2) Apply fluid packing to matching surface of oil pump.

Fluid packing:
THREE BOND 1215 or equivalent

(3) Install oil pump on cylinder block. Be careful not to damage oil seal during installation.

CAUTION:
• Do not forget to install O-ring and seal when installing oil pump.

GETtheMANUALS.org

• Align flat surface of oil pump's inner rotor with crankshaft before installation.

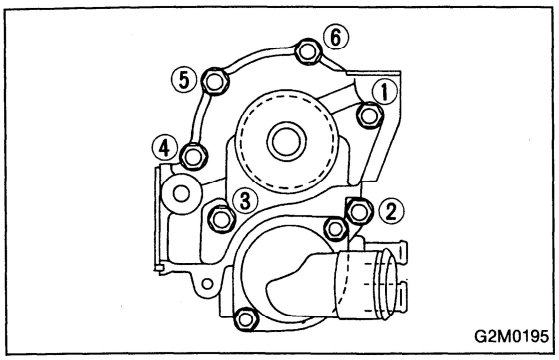

9) Install engine coolant pump and gasket.
CAUTION:
• Be sure to use a new gasket.
• When installing engine coolant pump, tighten bolts in two stages in numerical sequence as shown in figure.
10) Install engine coolant pipes to engine coolant pump.

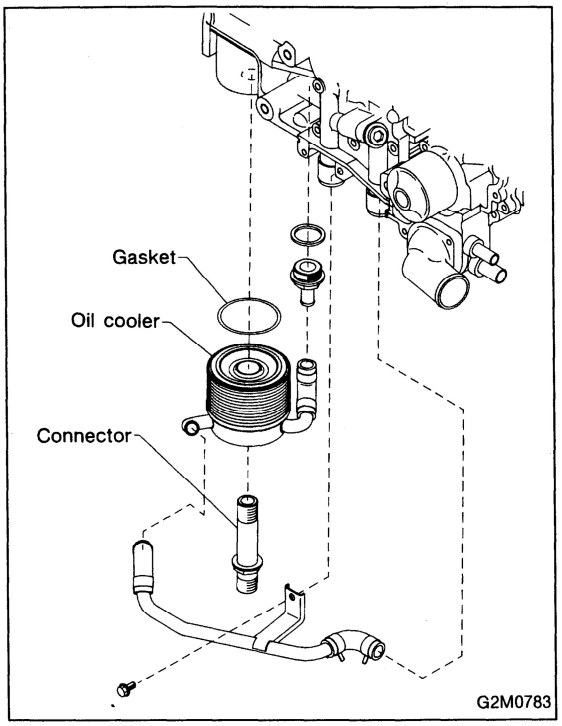

11) Install oil cooler.
12) Install engine coolant pipe to oil cooler.
13) Install oil filter.

GETtheMANUALS.org

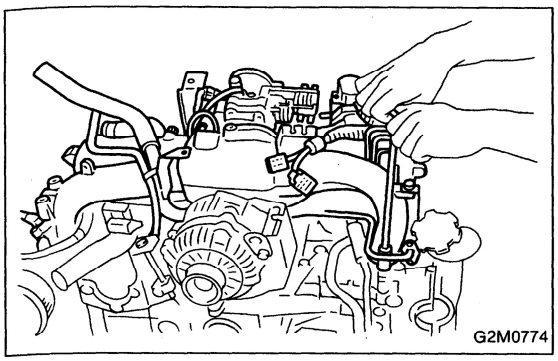
G2M0774

2. RELATED PARTS

1) Install cylinder head and intake manifold.
<Ref. to 2-3b [W6E0].>

2) Install timing belt, camshaft sprocket and related parts.
<Ref. to 2-3b [W3C0].>

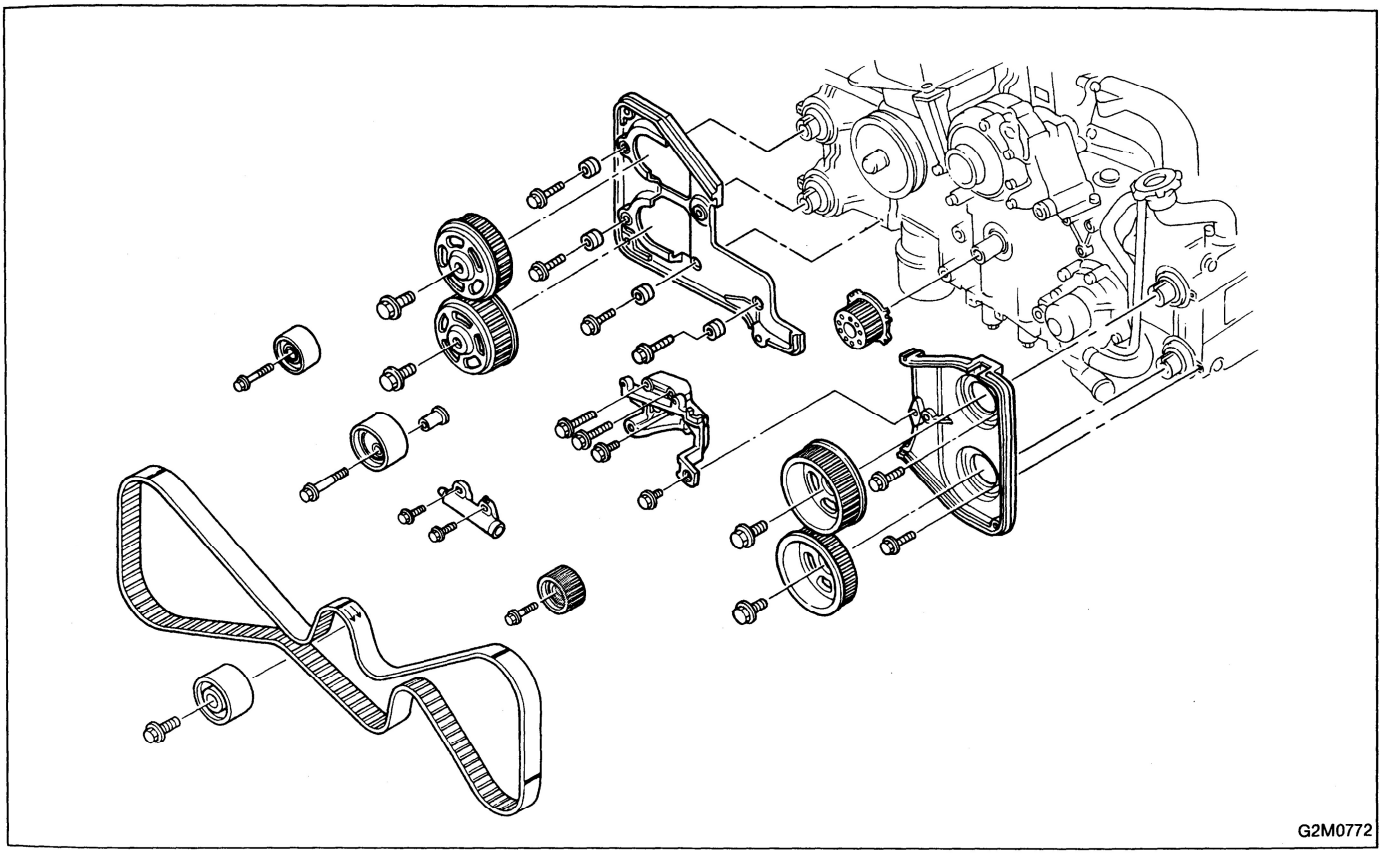
G2M0772

GETtheMANUALS.org

1. Engine Trouble in General

Numbers shown in the chart refer to the possibility of reason for the trouble in order. ("Very often" to "Rarely")
1 — Very often
2 — Sometimes
3 — Rarely

TROUBLE													
Engine will not start.													
Starter does not turn.	Initial combustion does not occur.	Initial combustion occurs.	Engine stalls after initial combustion.	Rough idle and engine stall.	Low output, hesitation and poor acceleration.	Surging.	Engine does not return to idle.	Dieseling (Run-on).	After burning in exhaust system.	Knocking.	Excessive engine oil consumption.	Excessive fuel consumption.	POSSIBLE CAUSE
													STARTER
2													● Defective battery-to-starter harness.
3													● Defective starter switch.
3													● Defective inhibitor switch.
2	3												● Defective starter.
													BATTERY
1													● Poor terminal connection.
1													● Run-down battery.
2													● Defective charging system.
	1	1	1	1	1	1	1	1	1	1		1	MFI SYSTEM <Ref. to 2-7b.>
													IGNITION SYSTEM
	2	2	2	1	1	1	1	1	1	1		1	● Incorrect ignition timing.
	2	1		2	2	2			3			3	● Disconnection of ignition coil.
	2			3	1	2	2		1	2			● Defective ignitor.
	2			3	2	2							● Defective ignition coil.
	2			3	3	3							● Defective cord or wiring.
		2		2	2	2			1				● Defective spark plug.
	2	2	2	1	2	1	3		2	2			● Incorrect cam timing.

GETtheMANUALS.org

TROUBLE													
Engine will not start.													
Starter does not turn.	Initial combustion does not occur.	Initial combustion occurs.	Engine stalls after initial combustion.	Rough idle and engine stall.	Low output, hesitation and poor acceleration.	Surging.	Engine does not return to idle.	Dieseling (Run-on).	After burning in exhaust system.	Knocking.	Excessive engine oil consumption.	Excessive fuel consumption.	
													INTAKE SYSTEM
		2	2	1	2	2	1	2	2			1	• Improper idle adjustment.
			2	1	1	1			3	1			• Loosened or cracked intake duct.
			3	1	1	1			3	1	1		• Loosened or cracked blow-by hose.
			3	1	2	1	1		2	1			• Loosened or cracked vacuum hose.
			3	2	2	2				1			• Defective air cleaner gasket.
		2	2	2	2	2				1			• Defective intake manifold gasket.
		2	2	2	2	2				1			• Defective throttle body gasket.
				3	2	2			2	2	2		• Defective PCV valve.
				2	2	2			3	2	3		• Loosened oil filler cap.
			3	3	1	2				2		1	• Dirty air cleaner element.
													FUEL LINE
	1	3		3	2	2							• Defective fuel pump.
		3	3	3	2	2							• Clogged fuel line.
	2	2	2	2	3	3							• Lack of or insufficient fuel.
													BELT
	2	2	2										• Defective.
	2	2	2	3	2	2			2	2		2	• Defective timing.
													FRICTION
3													• Seizure of crankshaft and connecting rod bearing.
3													• Seized camshaft.
3													• Seized or stuck piston and cylinder.
													COMPRESSION
	3	3	3	2	2	2			2	3		2	• Defective hydraulic lash adjuster.
	3	3	3	2	2	3			3			3	• Loosened spark plugs or defective gasket.
	3	3	3	2	2	3			3			3	• Loosened cylinder head nuts or defective gasket.
	3	3	3	2	2	3			2			2	• Improper valve seating.
	3	3	3	3	3	3			3		1	3	• Defective valve stem.
	2	2	2	2	2	3			3			3	• Worn or broken valve spring.
	3	3	3	2	3	3			3		1	2	• Worn or stuck piston rings, cylinder and piston.
	2	2	2	1	1	1			1	2		2	• Incorrect valve timing.
	2	2	2	2	2	2							• Improper engine oil (low viscosity).

GETtheMANUALS.org

TROUBLE													
Engine will not start.													
Starter does not turn.	Initial combustion does not occur.	Initial combustion occurs.	Engine stalls after initial combustion.	Rough idle and engine stall.	Low output, hesitation and poor acceleration.	Surging.	Engine does not return to idle.	Dieseling (Run-on).	After burning in exhaust system.	Knocking.	Excessive engine oil consumption.	Excessive fuel consumption.	
													LUBRICATION SYSTEM
				2	2				3			3	● Incorrect oil pressure.
											2		● Loosened oil pump attaching bolts and defective gasket.
											2		● Defective oil filter seal.
											2		● Defective crankshaft oil seal.
				3							2		● Defective rocker cover gasket.
											2		● Loosened oil drain plug or defective gasket.
											2		● Loosened oil pan fitting bolts or defective oil pan.
													COOLING SYSTEM
				3	3	2		2		1			● Overheating.
					3				3			3	● Over cooling.
													OTHERS
				1	1	3			3				● Malfunction of Evaporative Emission Control System.
				2			1						● Stuck or damaged throttle valve.
				3			2	2				2	● Accelerator cable out of adjustment.

GETtheMANUALS.org

2. Engine Noise

Hydraulic valve lash adjusters may make clicking noise once engine starts. It is normal if clicking noise ceases after a few minutes.

If clicking noise continues after a few minutes, check engine oil level and add oil if necessary. Warm-up engine for five minutes, then operate it at approximately 3,000 rpm for twenty minutes. If noise still exists, conduct diagnostics procedures in accordance with the following table.

CAUTION:
Do not disconnect ignition coil from spark plug while engine is running.

Type of sound	Condition	Possible cause
Regular clicking sound.	Sound increases as engine speed increases.	Valve mechanism is defective ● Broken lash adjuster. ● Worn valve rocker. ● Worn camshaft. ● Broken valve spring. ● Worn valve lifter hole.
Heavy and dull metallic knock.	Oil pressure is low.	● Worn crankshaft main bearing. ● Worn connecting rod bearing (big end).
	Oil pressure is normal.	● Loose flywheel mounting bolts. ● Damaged engine mounting.
High-pitched metallic knock. (Engine knocking)	Sound is noticeable when accelerating with an overload.	● Ignition timing advanced. ● Accumulation of carbon inside combustion chamber. ● Wrong spark plug. ● Improper gasoline.
Metallic knock when engine speed is medium (1,000 to 2,000 rpm).	Sound is reduced when fuel injector connector of noisy cylinder is disconnected.	● Worn crankshaft main bearing. ● Worn bearing at crankshaft end of connecting rod.
Knocking sound when engine is operating under idling speed and engine is warm.	Sound is reduced when fuel injector connector of noisy cylinder is disconnected.	● Worn cylinder liner and piston ring. ● Broken or stuck piston ring. ● Worn piston pin and hole at piston end of connecting rod.
	Sound is not reduced if each fuel injector connector is disconnected in turn.	● Unusually worn valve lifter. ● Worn cam sprocket gear. ● Worn camshaft journal bore in crankcase.
Squeaky sound.	—	● Insufficient alternator lubrication.
Rubbing sound.	—	● Defective alternator brush and rotor contact.
Gear scream when starting engine.	—	● Defective ignition starter switch. ● Worn gear and starter pinion.
Sound like polishing glass with a dry cloth.	—	● Loose timing belt. ● Defective engine coolant pump shaft.
Hissing sound.	—	● Loss of compression. ● Air leakage in air intake system, hoses, connections or manifolds.
Timing belt noise.	—	● Loose timing belt. ● Belt contacting case/adjacent part.

GETtheMANUALS.org

ENGINE LUBRICATION SYSTEM 2-4

Page

S SPECIFICATIONS AND SERVICE DATA
1. Specifications
C COMPONENT PARTS
1. Lubrication System
W SERVICE PROCEDURE 2
1. Oil Pump
2. Oil Pan and Oil Strainer
3. Oil Pressure Switch
4. Oil Cooler (Turbo model) 2
T DIAGNOSTICS
1. Engine Lubrication System

- The descriptions in this section apply to the turbo model.

GETtheMANUALS.org

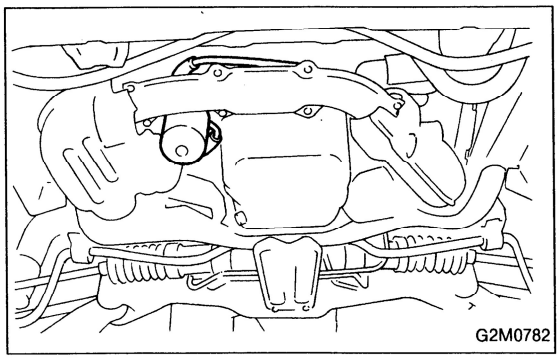
G2M0782

4. Oil Cooler (Turbo model)

A: REMOVAL

1) Remove water pipe.
2) Remove oil filter.

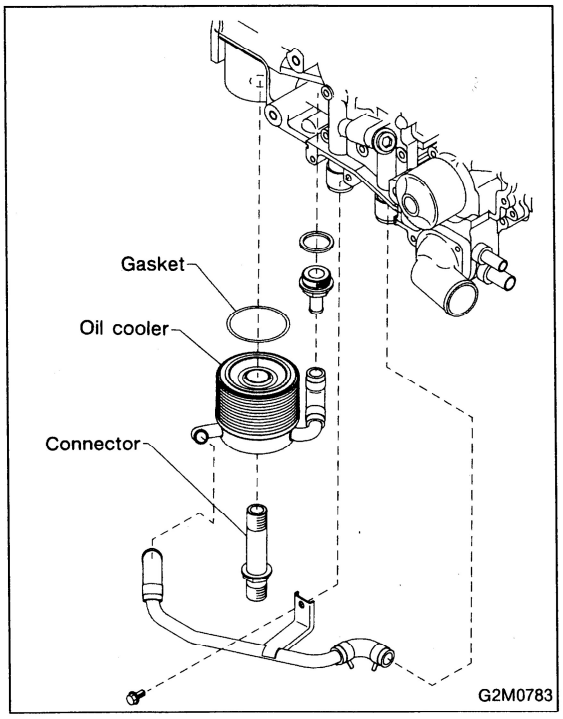

G2M0783

3) Remove connector and remove oil cooler.

B: INSPECTION

1) Check that coolant passages are not clogged using air blow method.
2) Check mating surfaces of cylinder block, O-ring groove and oil filter for damage.

GETtheMANUALS.org

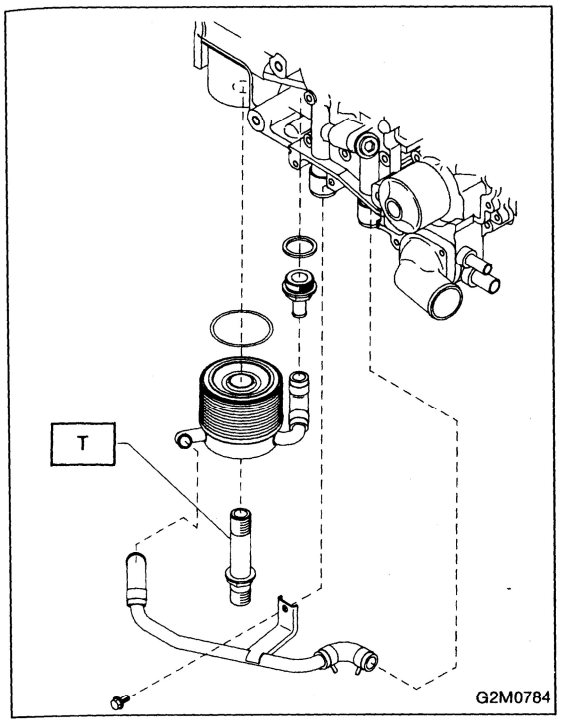

C: INSTALLATION

1) Install oil cooler on cylinder block with connector pipe.
2) Install oil filter.

Tightening torque:
T: 49 — 59 N·m (5.0 — 6.0 kg-m, 36 — 43 ft-lb)

CAUTION:
Always use a new O-ring.

GETtheMANUALS.org

FUEL INJECTION SYSTEM [MFI-TURBO] 2-7b

Page

C COMPONENT PARTS 2
1. Collector Chamber and Intake Manifold 2
2. Air Intake System 3
3. Air Cleaner 4
4. Turbocharger Unit 5
S SERVICE PROCEDURE 6
1. Air Cleaner and Air Intake Duct 6
2. Intercooler 7
3. Mass Air Flow Sensor 7
4. Throttle Body 8
5. Collector Chamber and Intake Manifold 9
6. Engine Coolant Temperature Sensor 15
7. Crankshaft Position Sensor 16
8. Oxygen Sensor 16
9. Knock Sensor 17
10. Throttle Position Sensor 18
11. Camshaft Position Sensor 19
12. Idle Air Control Solenoid Valve 20
13. Purge Control Solenoid Valve 21
14. Turbocharger Unit 21
15. Fuel Injector 24
16. Engine Control Module 25
17. Main Relay and Fuel Pump Relay 26

GETtheMANUALS.org

1. Collector Chamber and Intake Manifold

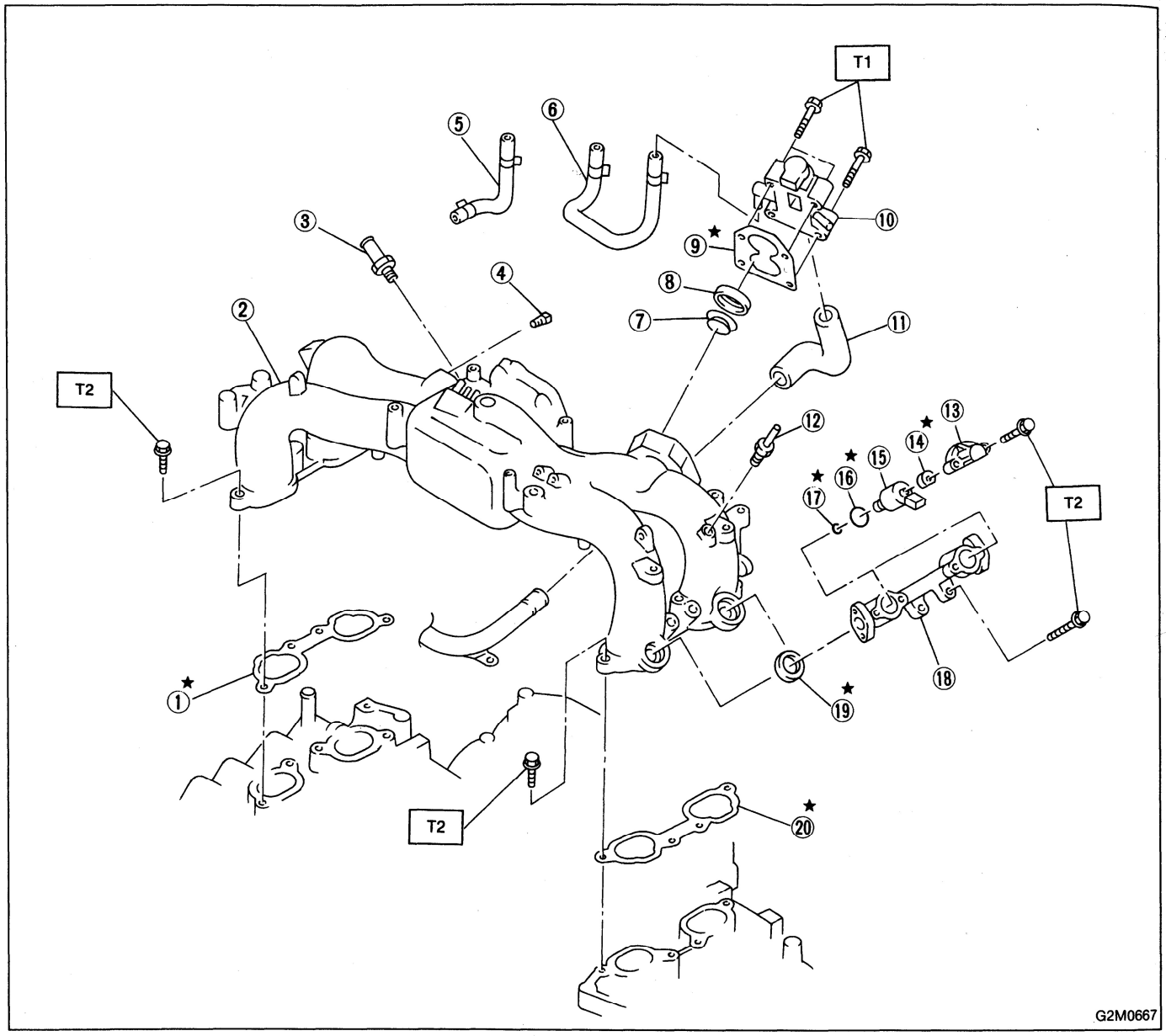

① Intake manifold gasket LH
② Intake manifold
③ PCV valve
④ Plug
⑤ Engine coolant hose A
⑥ Engine coolant hose B
⑦ Air control valve 2
⑧ Air control valve spring
⑨ Gasket
⑩ Idle air control solenoid valve
⑪ Engine coolant hose C
⑫ Nipple
⑬ Fuel injector cap
⑭ Insulator
⑮ Fuel injector
⑯ O-ring A
⑰ O-ring B
⑱ Fuel injector pipe
⑲ Washer
⑳ Intake manifold gasket LH

Tightening torque: N·m (kg-m, ft-lb)
T1: 6 — 7 (0.6 — 0.7, 4.3 — 5.1)
T2: 19 — 23 (1.9 — 2.3, 14 — 17)

GETtheMANUALS.org

2. Air Intake System

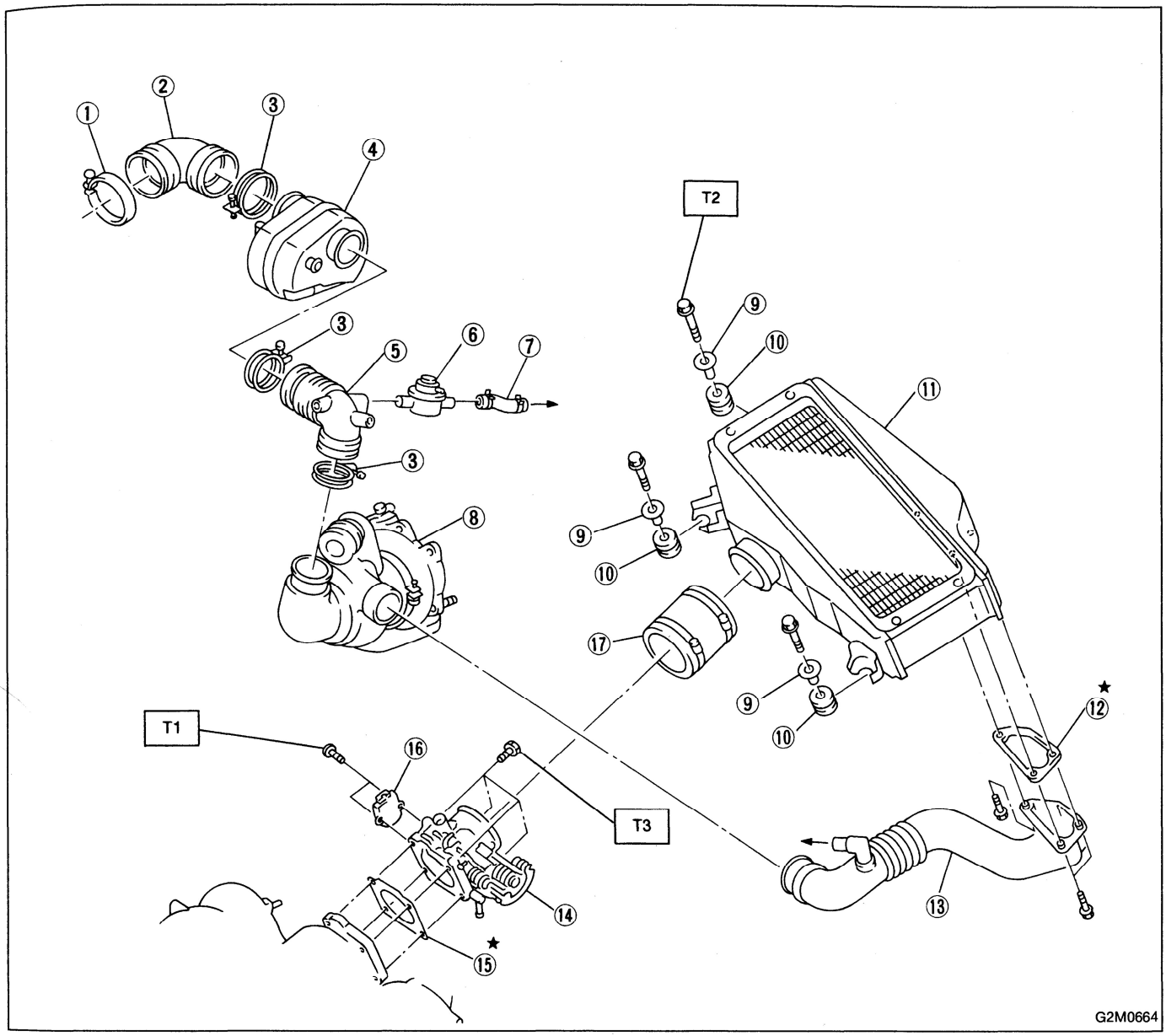

① Clip
② Air intake boot
③ Clip
④ Resonator chamber
⑤ Air intake duct A
⑥ Air by-pass valve
⑦ Air by-pass hose
⑧ Turbocharger unit
⑨ Spacer
⑩ Cushion
⑪ Intercooler
⑫ Gasket
⑬ Air intake duct B
⑭ Throttle body
⑮ Gasket
⑯ Throttle position sensor
⑰ Connection rubber

Tightening torque: N·m (kg-m, ft-lb)
T1: 2.0 — 2.4 (0.20 — 0.24, 1.4 — 1.7)
T2: 16 — 20 (1.6 — 2.0, 12 — 14)
T3: 23 — 26 (2.3 — 2.7, 17 — 20)

GETtheMANUALS.org

3. Air Cleaner

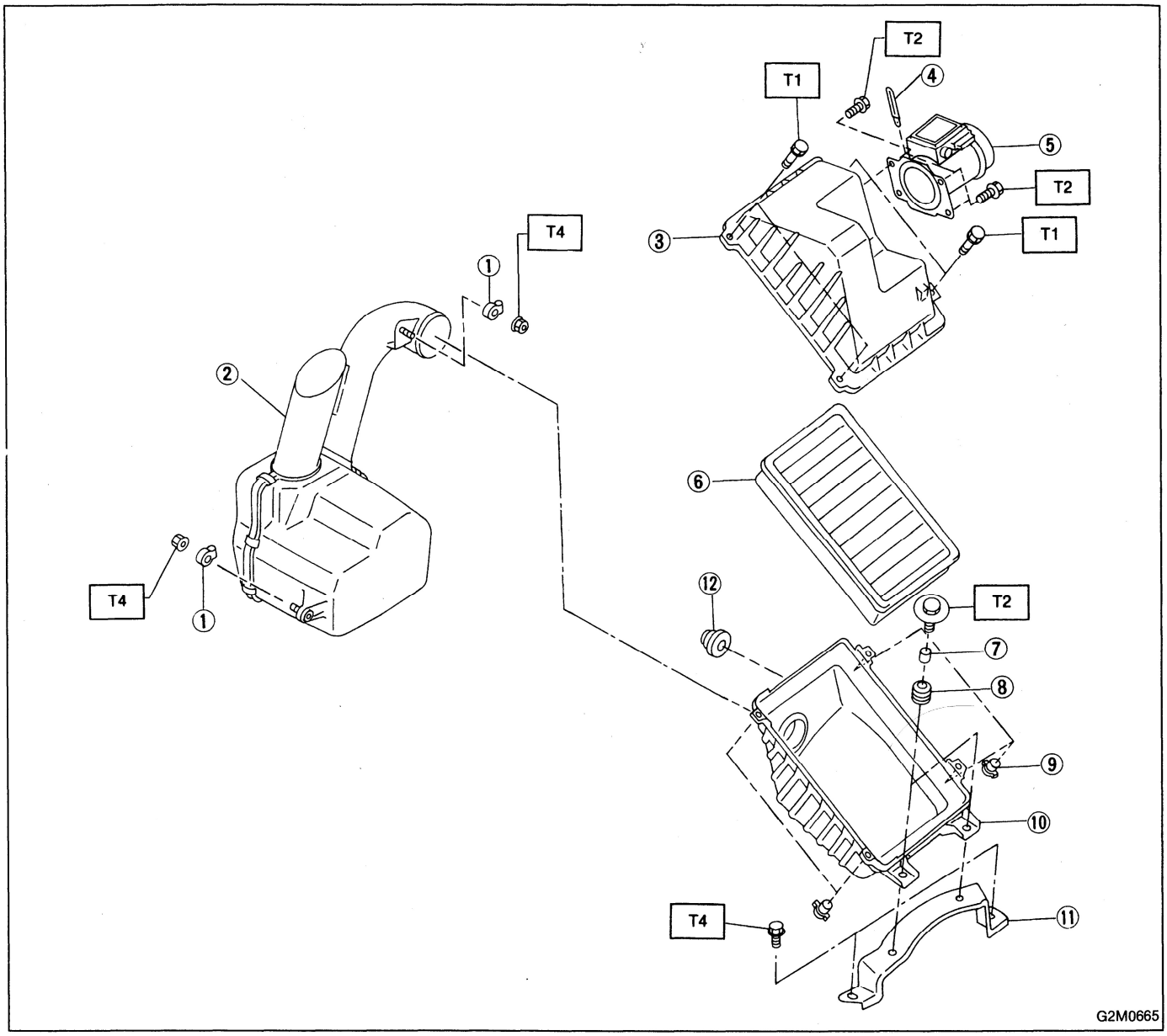

① Spring cushion
② Resonator ASSY
③ Air cleaner upper cover
④ Clip
⑤ Mass air flow sensor
⑥ Air cleaner element
⑦ Spacer
⑧ Bush
⑨ Spacer
⑩ Air cleaner lower cover
⑪ Air cleaner bracket
⑫ Cushion rubber

Tightening torque: N·m (kg-m, ft-lb)
T1: 2.5 — 4.4 (0.25 — 0.45, 1.8 — 3.3)
T2: 4.4 — 7.4 (0.45 — 0.75, 3.3 — 5.4)
T3: 6.4 — 8.3 (0.65 — 0.85, 4.7 — 6.1)
T4: 27 — 37 (2.8 — 3.8, 20 — 27)

GETtheMANUALS.org

4. Turbocharger Unit

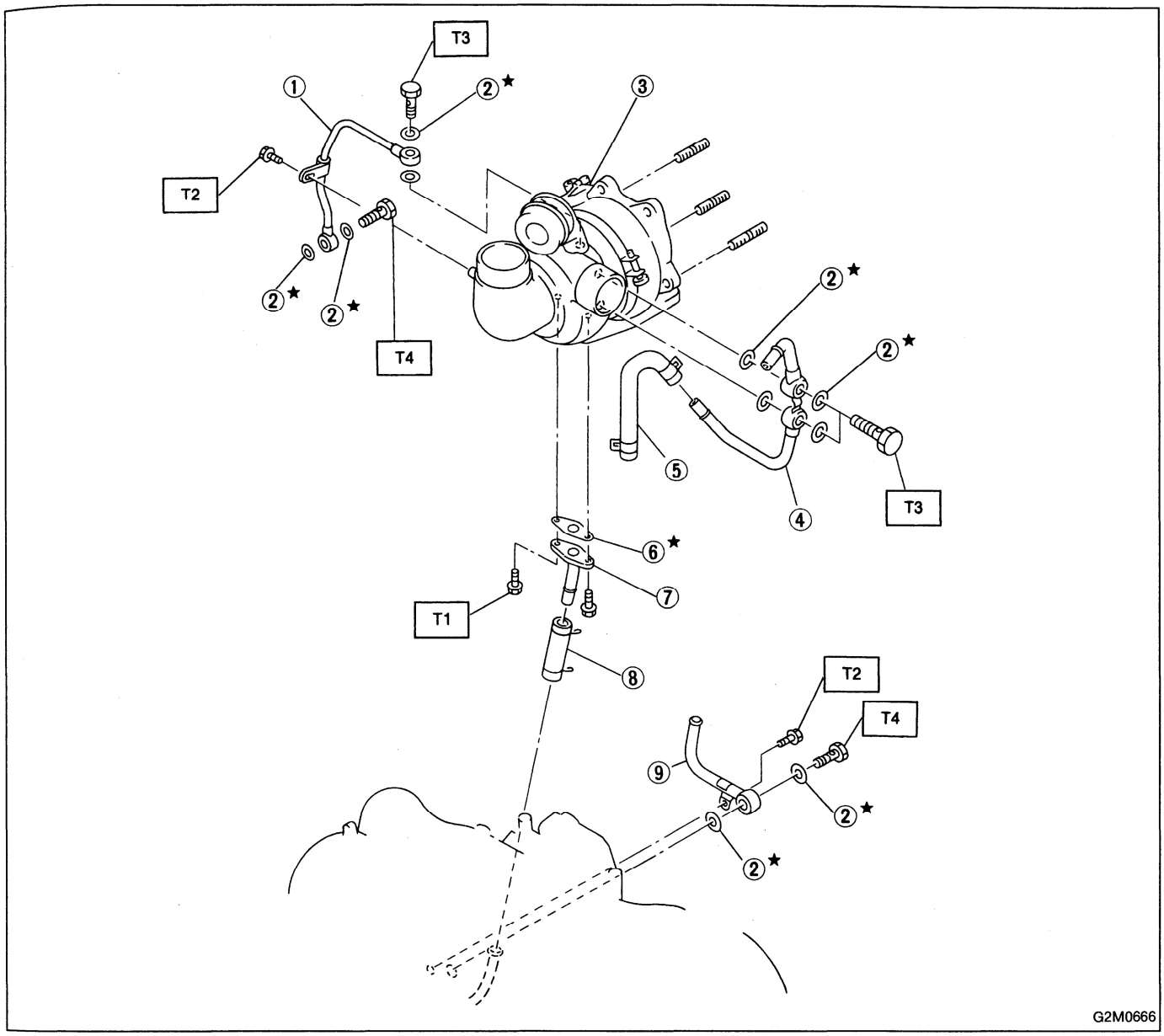

① Oil inlet pipe
② Metal gasket
③ Turbocharger
④ Engine coolant pipe A
⑤ Engine coolant hose
⑥ Gasket
⑦ Oil outlet pipe
⑧ Oil outlet hose
⑨ Engine coolant pipe B

Tightening torque: N·m (kg-m, ft-lb)
T1: 2.5 — 4.4 (0.25 — 0.45, 1.8 — 3.3)
T2: 4.4 — 5.4 (0.45 — 0.55, 3.3 — 4.0)
T3: 15 — 18 (1.5 — 1.8, 11 — 13)
T4: 22 — 25 (2.2 — 2.5, 16 — 18)

GETtheMANUALS.org

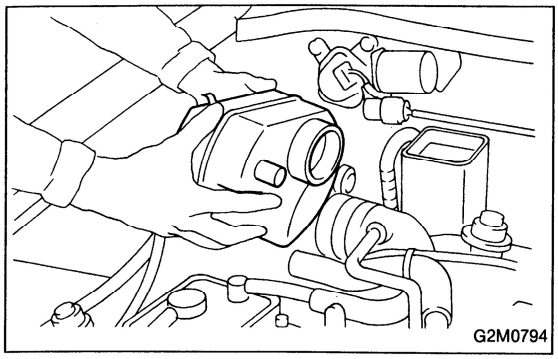

1. Air Cleaner and Air Intake Duct

A: REMOVAL AND INSTALLATION

1) Remove resonator chamber.

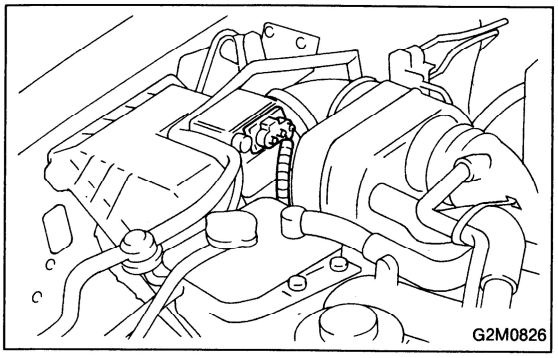

2) Disconnect connector from mass air flow sensor.

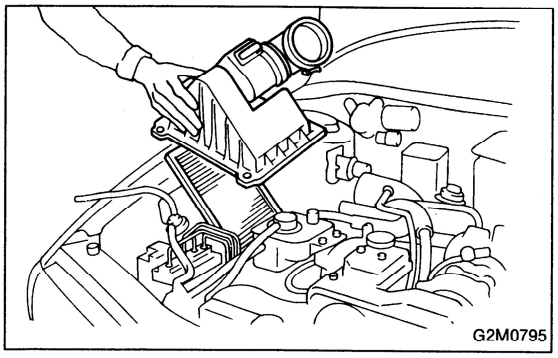

3) Remove clip of air cleaner upper cover.
4) Remove air cleaner element.

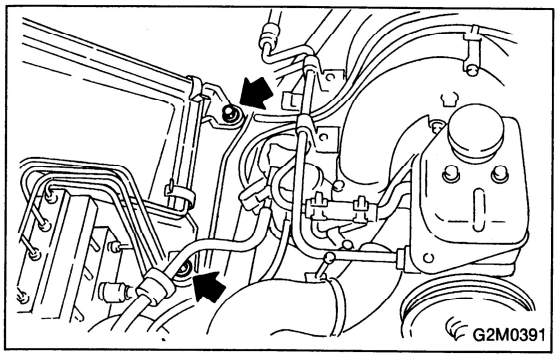

5) Remove air cleaner lower case.

6) Installation is in the reverse order of removal.

GETtheMANUALS.org

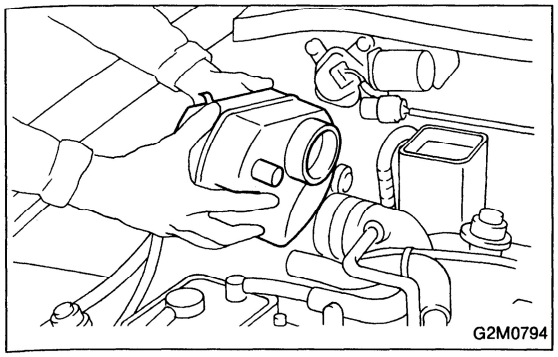

2. Intercooler

A: REMOVAL AND INSTALLATION

1) Remove resonator chamber and air intake duct.

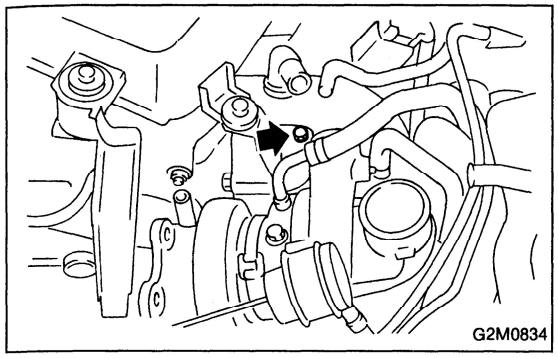

2) Separate intercooler air duct from turbocharger.

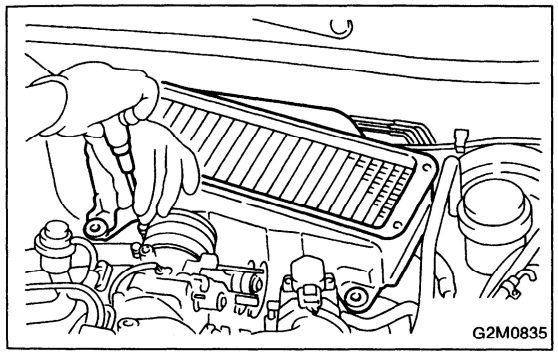

3) Remove bolts which install intercooler to bracket.
4) Separate intercooler from throttle body, and remove it.

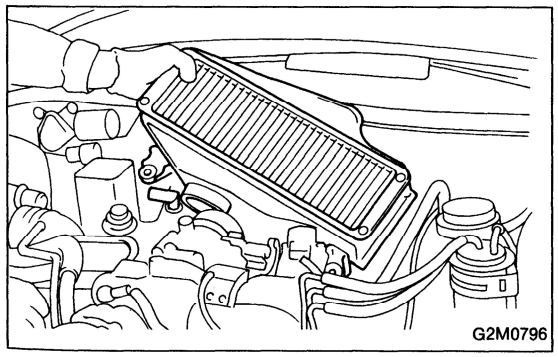

5) Installation is in the reverse order of removal procedure.

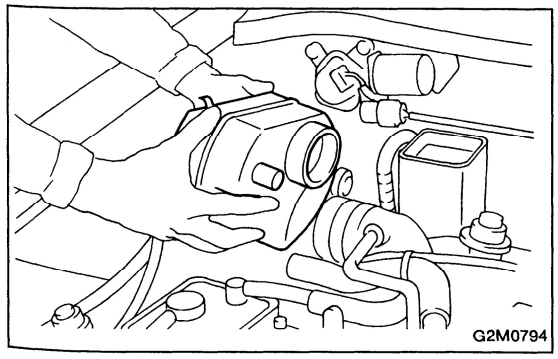

3. Mass Air Flow Sensor

A: REMOVAL AND INSTALLATION

1) Remove resonator chamber.

GETtheMANUALS.org

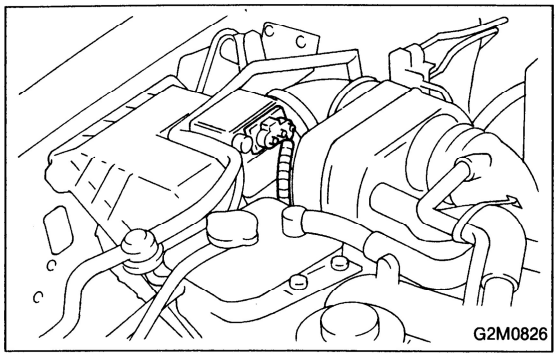

2) Disconnect connector from mass air flow sensor.

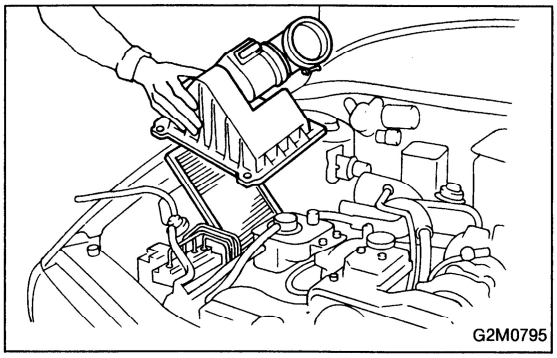

3) Remove air cleaner upper cover.

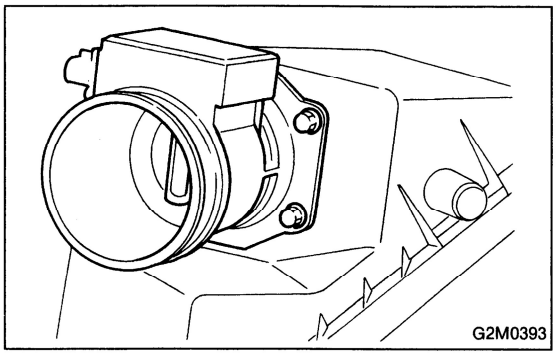

4) Remove mass air flow sensor from air cleaner upper cover.

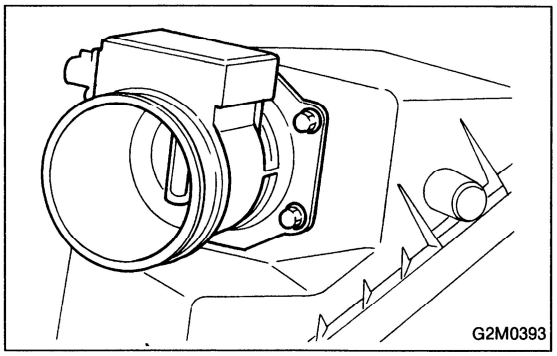

5) Installation is in the reverse order of removal.

Tightening torque:
4.4 — 7.4 N·m (0.45 — 0.75 kg-m, 3.3 — 5.4 ft-lb)

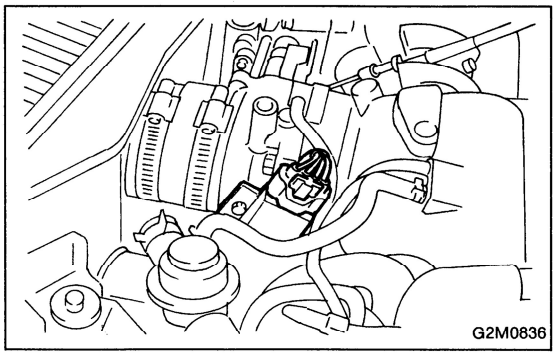

4. Throttle Body

A: REMOVAL AND INSTALLATION

1) Disconnect connector from throttle position sensor.

GETtheMANUALS.org

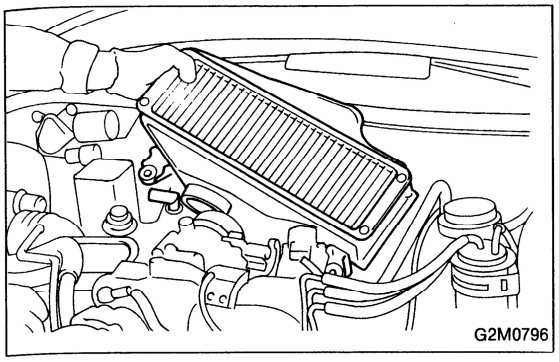

2) Remove intercooler.

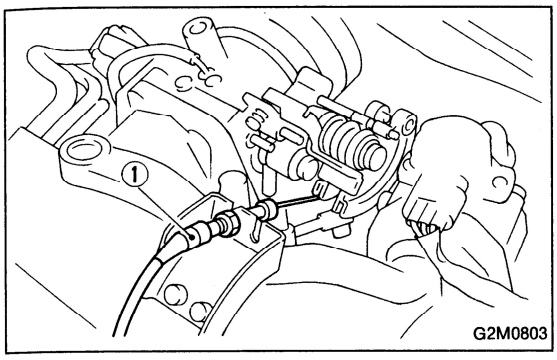

3) Disconnect accelerator cable ①.

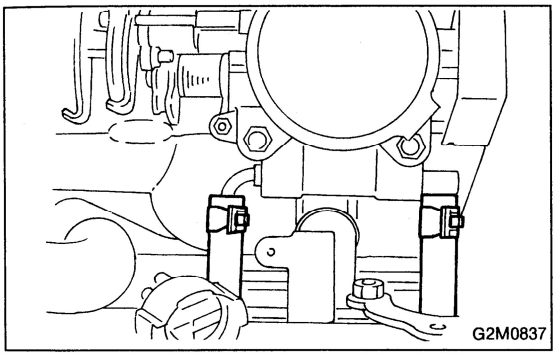

4) Disconnect engine coolant hose from throttle body.

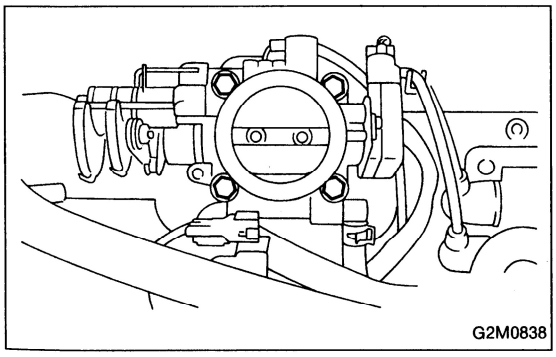

5) Remove bolts which install throttle body to collector chamber.
6) Installation is in the reverse order of removal procedure.

Tightening torque:
28 — 34 N·m (2.9 — 3.5 kg-m, 21 — 25 ft-lb)

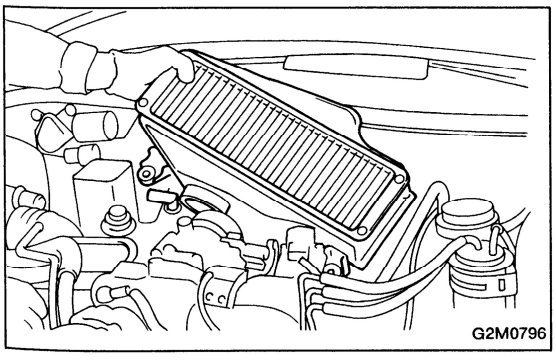

5. Collector Chamber and Intake Manifold

A: REMOVAL

1) Release fuel pressure. <Ref. to 2-8 [W1A0].>
2) Remove intercooler.

GETtheMANUALS.org

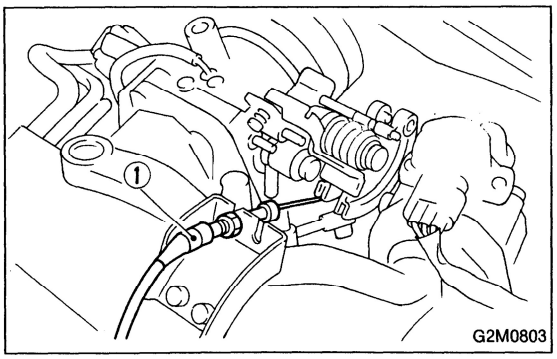

3) Disconnect accelerator cable ①.

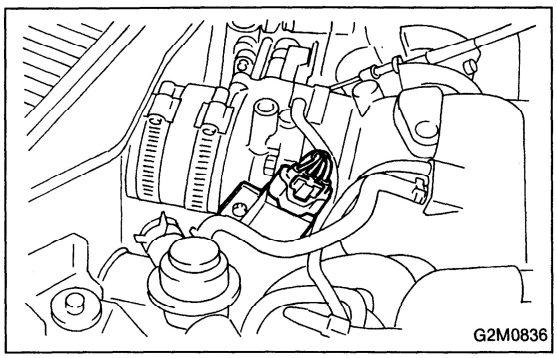

4) Disconnect connector from throttle position sensor.

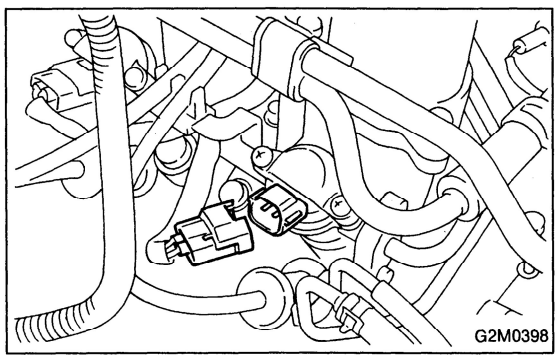

5) Disconnect connectors from fuel injectors.

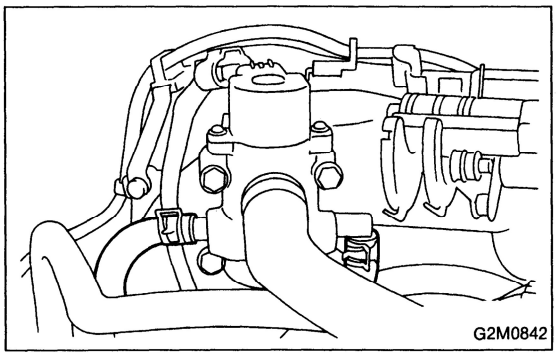

6) Disconnect engine coolant hose from idle air control solenoid valve.
7) Disconnect air inlet hose.

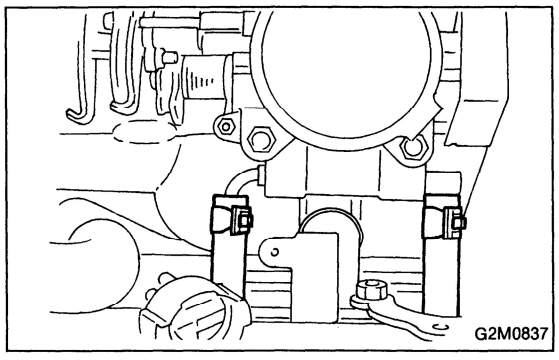

8) Disconnect engine coolant hoses from throttle body.

GETtheMANUALS.org

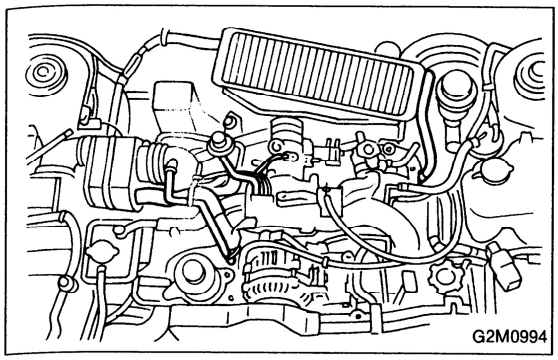

9) Disconnect brake booster hose.
10) Disconnect air by-pass hoses from intake manifold.
11) Disconnect emission hoses from intake manifold.

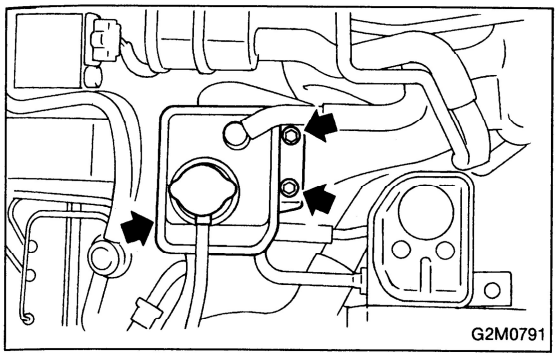

12) Remove coolant filler tank.

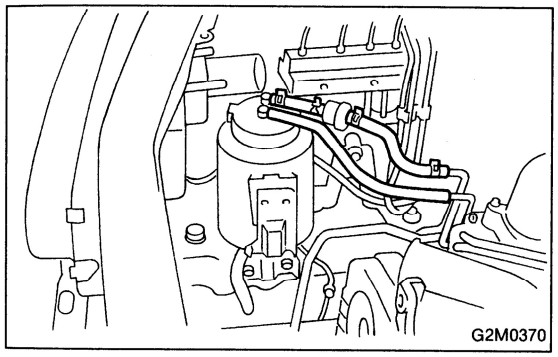

13) Disconnect canister hose from pipe.

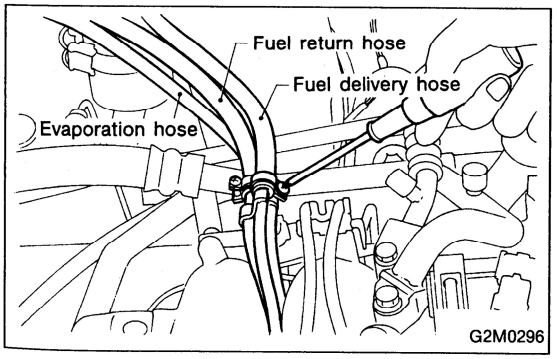

14) Disconnect fuel hoses from pipes.

WARNING:
Catch fuel from hoses in a container.

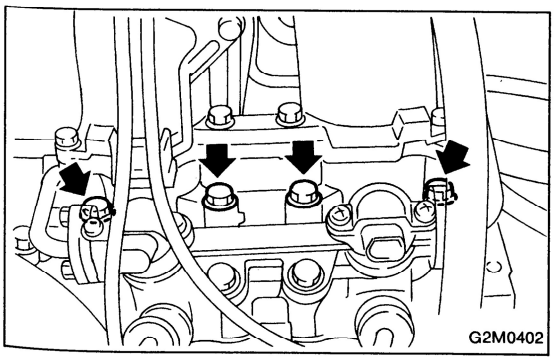

15) Remove bolts which hold power steering pipe bracket onto intake manifold.
16) Remove bolts which hold intake manifold onto cylinder heads.

GETtheMANUALS.org

17) Disconnect connector from purge control solenoid valve on inner side of collector chamber.
18) Remove collector chamber and intake manifold.

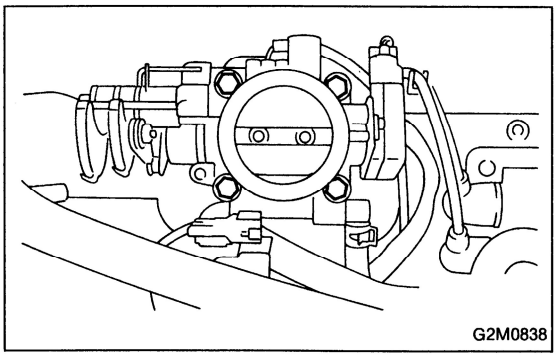

B: DISASSEMBLY

1) Remove throttle body.

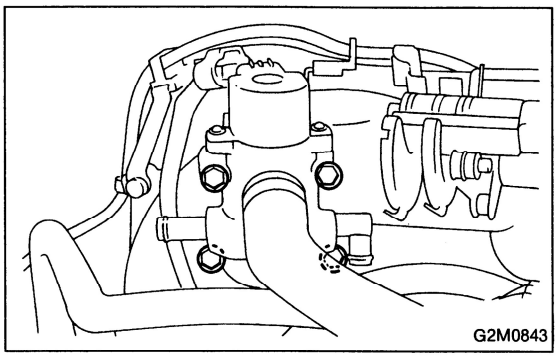

2) Remove idle air control solenoid valve.

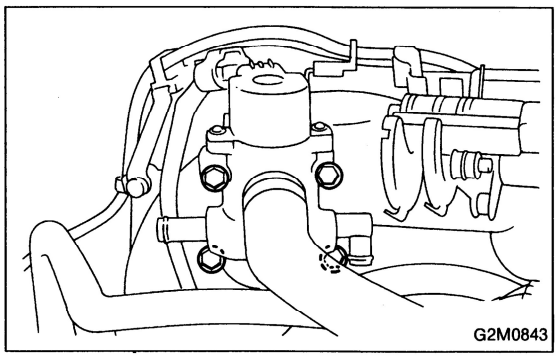

C: ASSEMBLY

1) Assemble idle air control solenoid valve.

CAUTION:
Replace gaskets with new ones.

Tightening torque:
6 — 7 N·m (0.6 — 0.7 kg-m, 4.3 — 5.1 ft-lb)

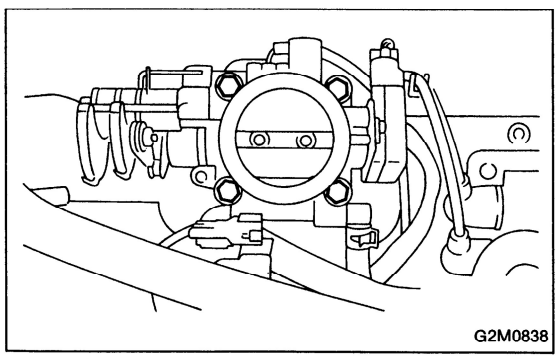

2) Assemble throttle body.

CAUTION:
Replace gasket with a new one.

Tightening torque:
14 — 24 N·m (1.4 — 2.4 kg-m, 10 — 17 ft-lb)

GETtheMANUALS.org

D: INSTALLATION

1) Connect connector to purge control solenoid valve on inner side of collector chamber.

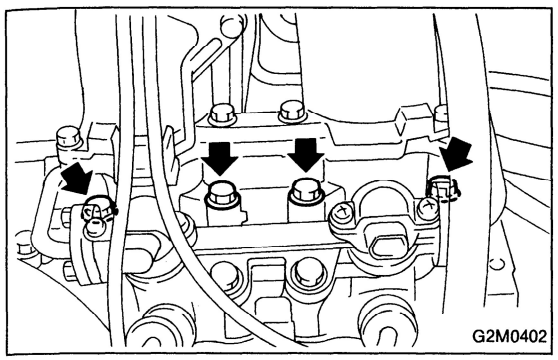

2) Install intake manifold and collector chamber onto cylinder heads.

CAUTION:
Always use new gaskets.

Tightening torque:
20 — 34 N·m (2.0 — 3.5 kg-m, 14 — 25 ft-lb)

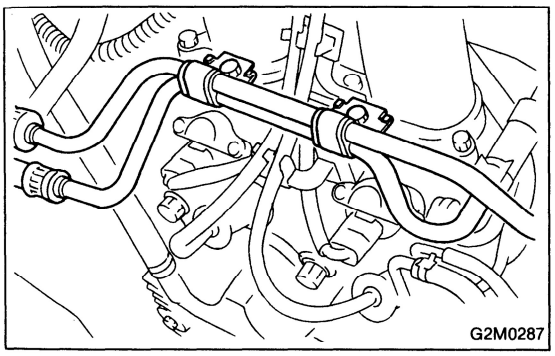

3) Install power steering pipe bracket onto intake manifold.

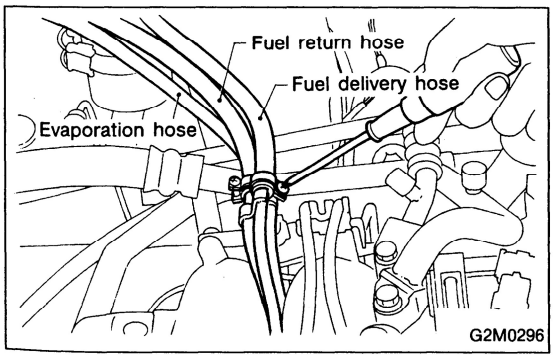

4) Connect fuel hoses.

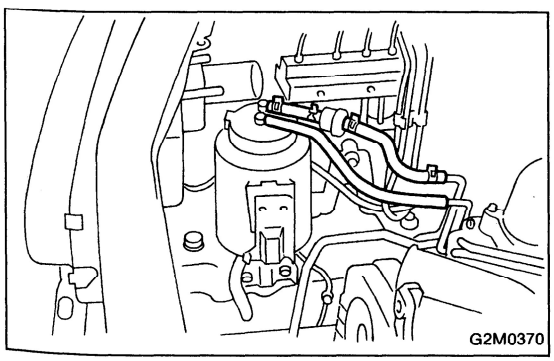

5) Connect canister hoses.

GETtheMANUALS.org

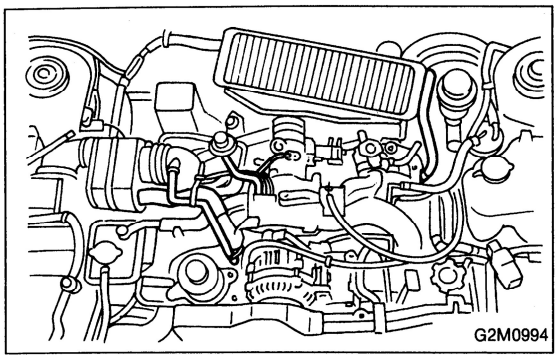

6) Connect brake booster vacuum hose.
7) Connect air by-pass hoses.
8) Connect emission hoses.

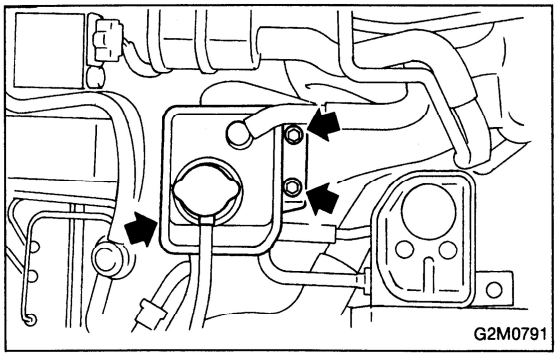

9) Install engine coolant filler tank.

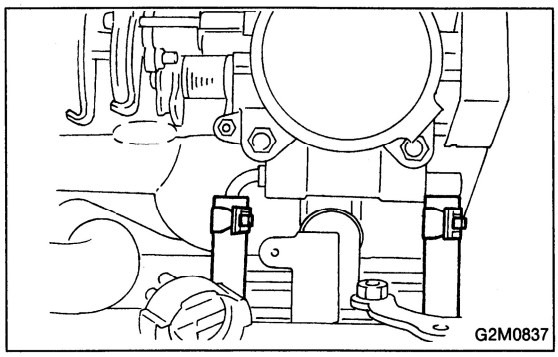

10) Connect engine coolant hoses to throttle body.

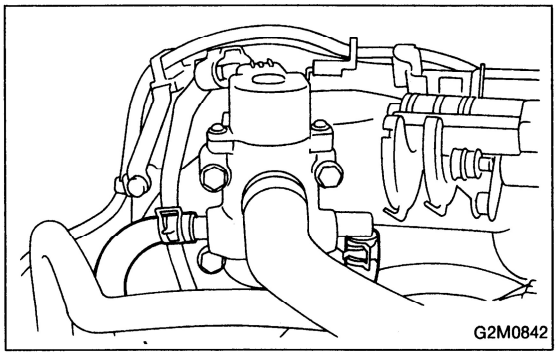

11) Connect engine coolant hose to idle air control solenoid valve.
12) Connect air inlet hose.

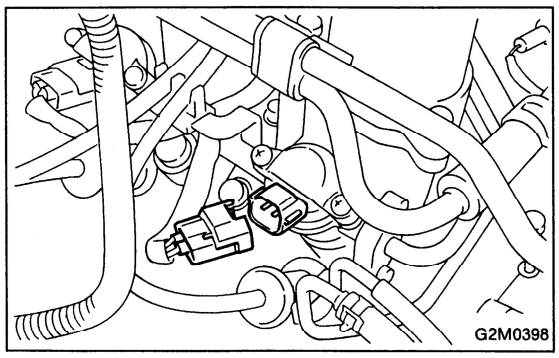

13) Connect connectors to fuel injectors.

GETtheMANUALS.org

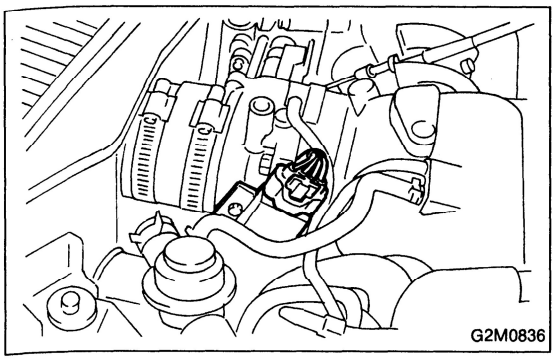
G2M0836

14) Connect connector to throttle position sensor.

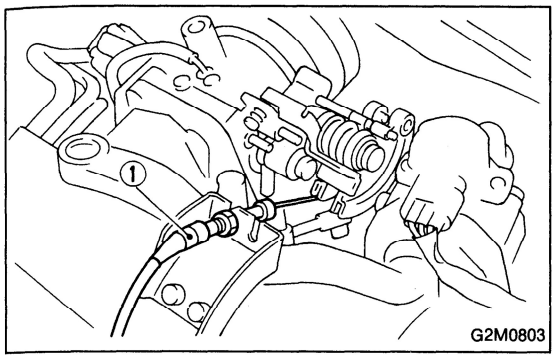

G2M0803

15) Connect accelerator cable ①.

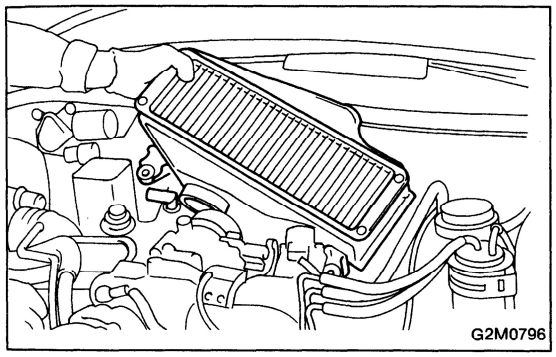
G2M0796

16) Install intercooler.

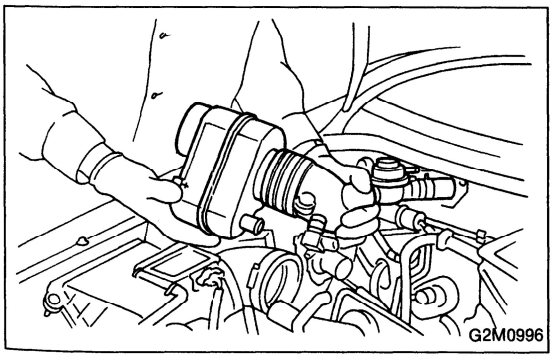
G2M0996

6. Engine Coolant Temperature Sensor

A: REMOVAL AND INSTALLATION

1) Remove resonator chamber and air inlet duct A.

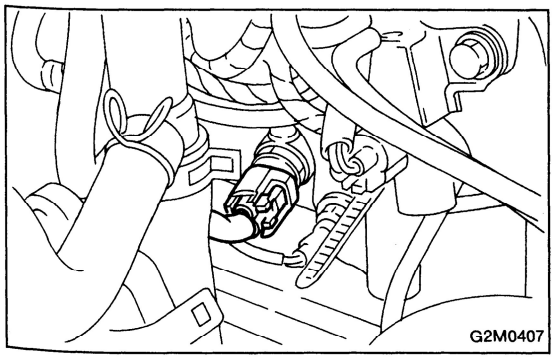
G2M0407

2) Disconnect connector from engine coolant temperature sensor.
3) Remove engine coolant temperature sensor.

GETtheMANUALS.org

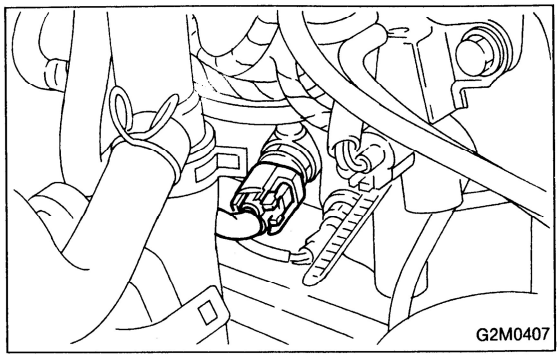
G2M0407

4) Installation is in the reverse order of removal.

Tightening torque:
22 — 27 N·m (2.2 — 2.8 kg-m, 16 — 20 ft-lb)

7. Crankshaft Position Sensor

A: REMOVAL AND INSTALLATION

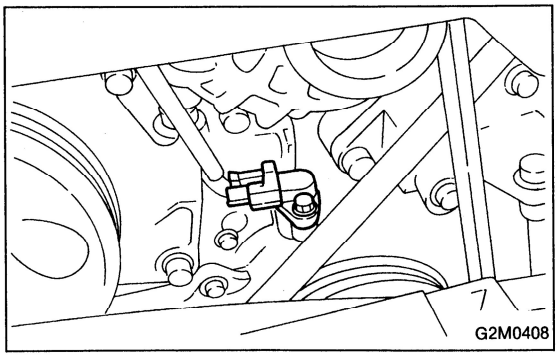
G2M0408

1) Remove bolt which install crankshaft position sensor to cylinder block.

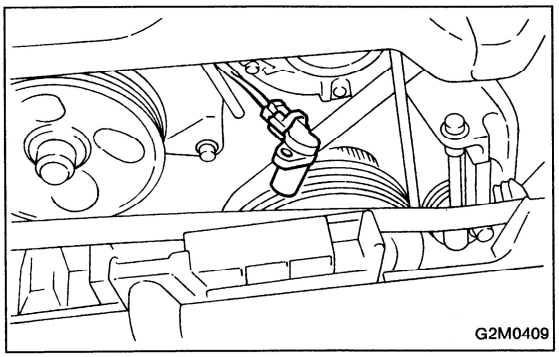
G2M0409

2) Remove crankshaft position sensor, and disconnect connector from it.

8. Oxygen Sensor

A: REMOVAL

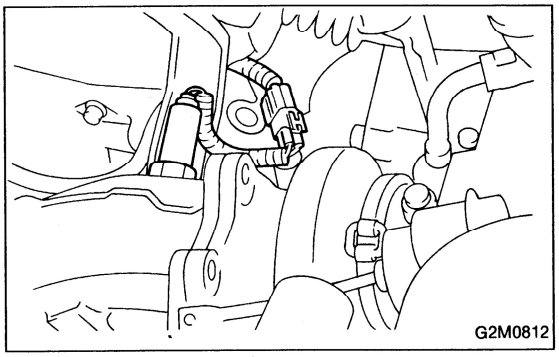
G2M0812

1) Disconnect connector from oxygen sensor.

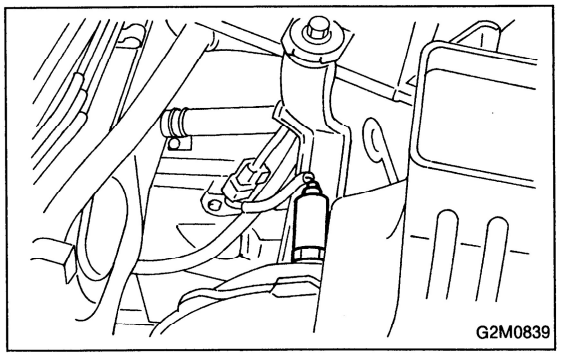
G2M0839

2) Apply SUBARU CRC or its equivalent to threaded portion of oxygen sensor, and leave it for one minute or more.

SUBARU CRC (Part No. 004301003)

3) Remove oxygen sensor.

CAUTION:
When removing oxygen sensor, do not force oxygen sensor free, especially when exhaust pipe is cold. Otherwise, it will damage exhaust pipe.

GETtheMANUALS.org

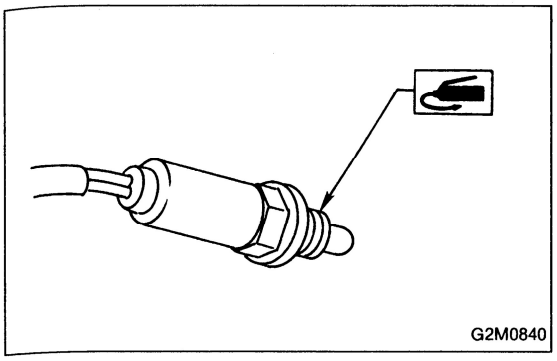
G2M0840

B: INSTALLATION

1) Before installing oxygen sensor, apply anti-seize compound only to threaded portion of oxygen sensor to make the next removal easier.

Anti-seize compound:
SS-30 by JET LUBE

CAUTION:
Never apply anti-seize compound to protector of oxygen sensor.

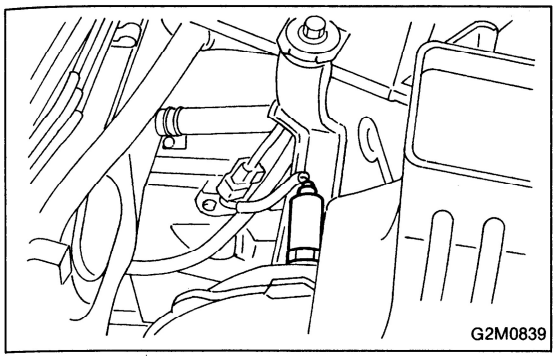
G2M0839

2) Install oxygen sensor.

Tightening torque:
41 — 47 N·m (4.2 — 4.8 kg-m, 30 — 35 ft-lb)

3) Connect connector of oxygen sensor.

9. Knock Sensor

A: REMOVAL AND INSTALLATION

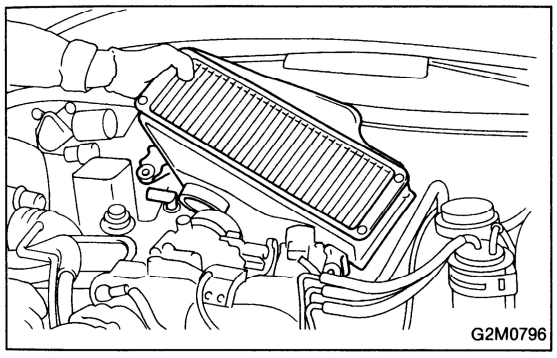
G2M0796

1) Remove intercooler.

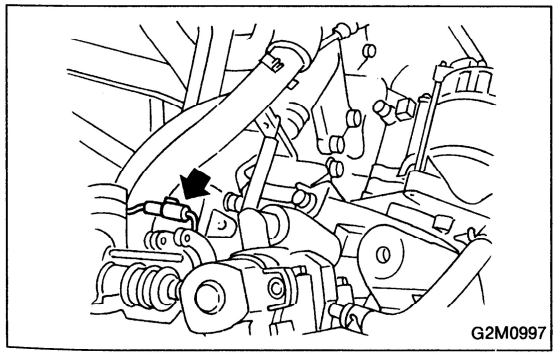
G2M0997

2) Disconnect connector from knock sensor.

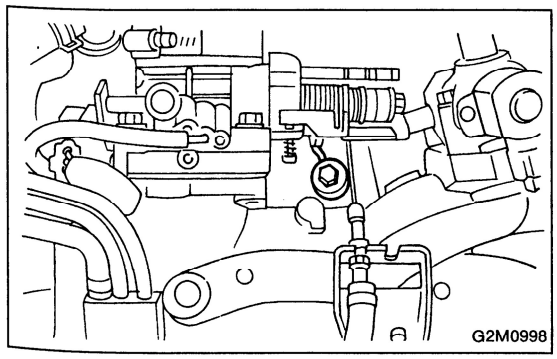
G2M0998

3) Remove knock sensor on cylinder block.
4) Installation is in the reverse order of removal.

GETtheMANUALS.org

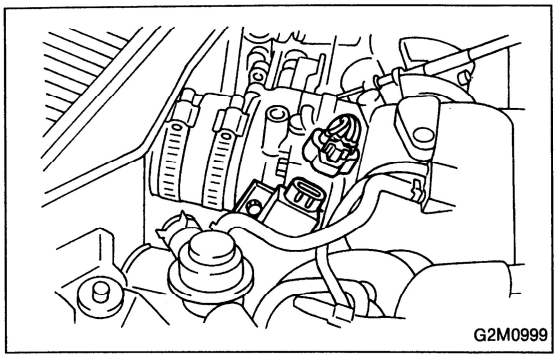
G2M0999

10. Throttle Position Sensor

A: REMOVAL AND INSTALLATION

1) Disconnect connector from throttle position sensor.
2) Remove throttle position sensor holding screws, and remove it.
3) Installation is in the reverse order of removal.

Tightening torque:
2.0 — 2.4 N·m (0.20 — 0.24 kg-m, 1.4 — 1.7 ft-lb)

CAUTION:
When installing throttle position sensor, adjust to the specified data.

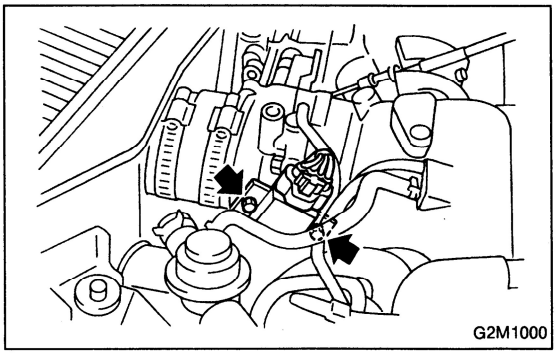
G2M1000

B: ADJUSTMENT

1. THROTTLE POSITION SENSOR

1) Turn ignition switch to OFF.
2) Loosen throttle position sensor holding screws.

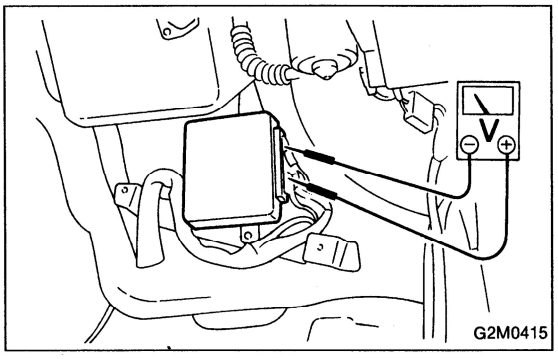

G2M0415

3) When using voltage meter;
   (1) Take out ECM.
   (2) Turn ignition switch to ON.
   (3) Adjust throttle position sensor to specified voltage between ECM connector terminal.

Connector & Terminal / Specified voltage
LHD (B108) No. 2 — (B108) No. 1 / 4.5 — 5.5 V
RHD (B95) No. 2 — (B95) No. 1 / 4.5 — 5.5 V
[Fully closed.]

   (4) Tighten throttle position sensor holding screws.

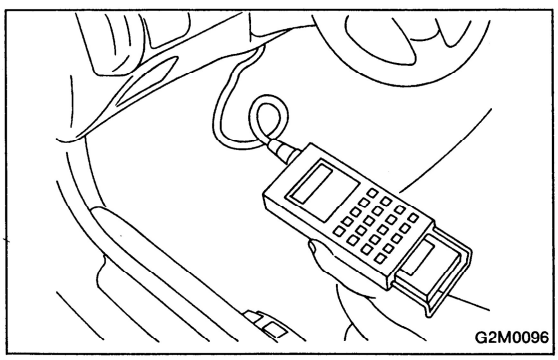
G2M0096

4) When using the Select Monitor;
   (1) Attach Select Monitor.
   (2) Turn ignition switch to ON.
   (3) Select mode "F10".
   (4) Adjust throttle position sensor to specified data.

Condition / Specified data.
Throttle fully closed. / 4.7 V

   (5) Tighten throttle position sensor holding screws.

GETtheMANUALS.org

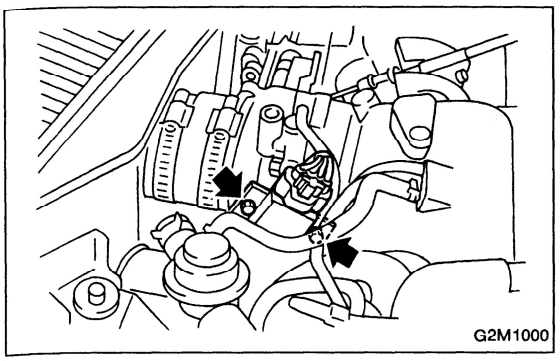

2. IDLE SWITCH

1) Turn ignition switch to OFF.
2) Loosen throttle position sensor holding screws.

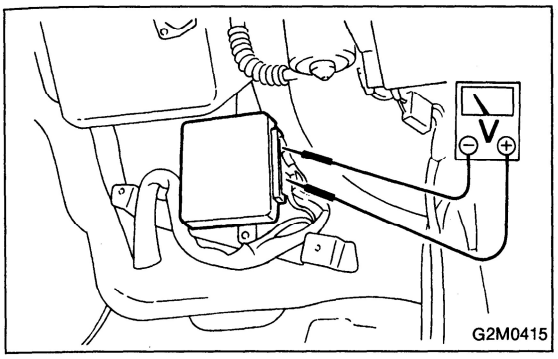

3) When using voltage meter;
   (1) Take out ECM.
   (2) Turn ignition switch to ON.
   (3) Adjust throttle position sensor to specified voltage between ECM connector terminal.

Connector & Terminal / Specified voltage
LHD (B109) No. 6 — Body / 0 V
RHD (B96) No. 6 — Body / 0 V
[Fully closed.]

   (4) Tighten throttle position sensor holding screws.

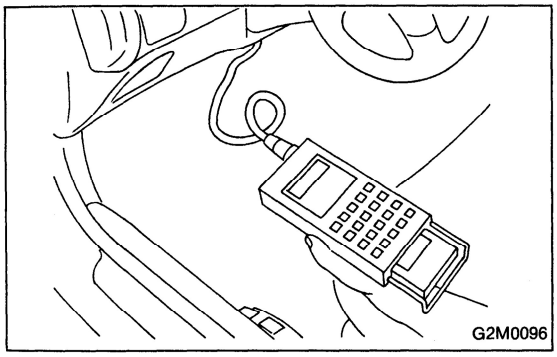

4) When using the Select Monitor;
   (1) Attach Select Monitor.
   (2) Turn ignition switch to ON.
   (3) Select mode "FA1".
   (4) Make sure that No. 1 LED is turned ON when throttle valve is fully closed.
   (5) Tighten throttle position sensor holding screws.

11. Camshaft Position Sensor

A: REMOVAL AND INSTALLATION

1) Disconnect connector from camshaft position sensor.

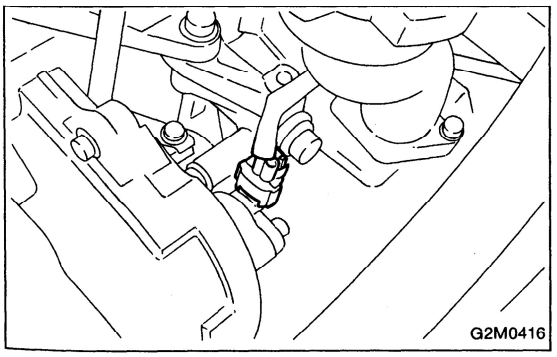

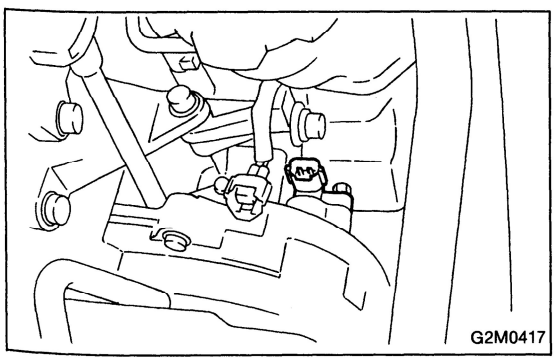

2) Remove camshaft position sensor from camshaft support LH.

GETtheMANUALS.org

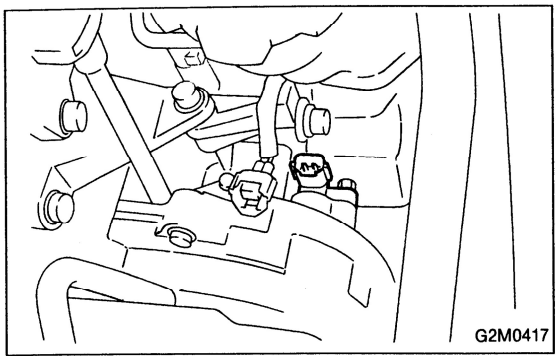

3) Installation is in the reverse order of removal.

Tightening torque:
49 N·m (5.0 kg-m, 36 ft-lb)

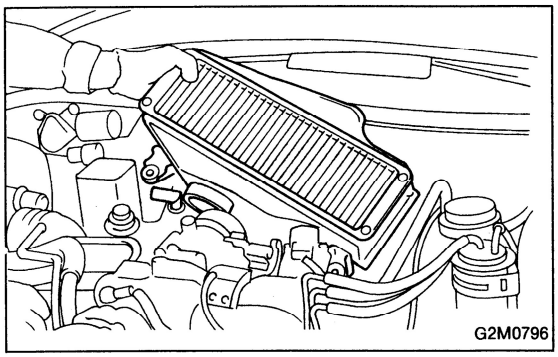

12. Idle Air Control Solenoid Valve

A: REMOVAL AND INSTALLATION

1) Remove intercooler.

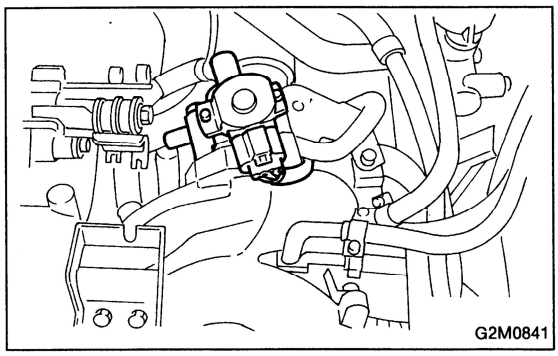

2) Disconnect connector from idle air control solenoid valve.

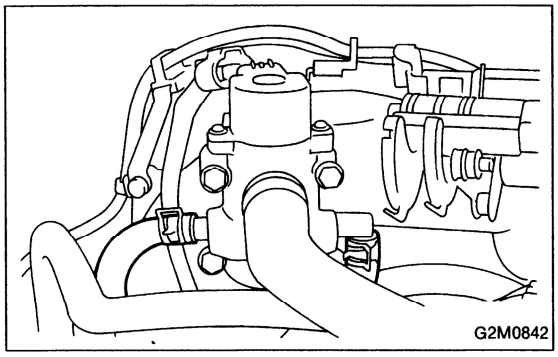

3) Disconnect engine coolant hose from idle air control solenoid valve.
4) Disconnect air inlet hose.

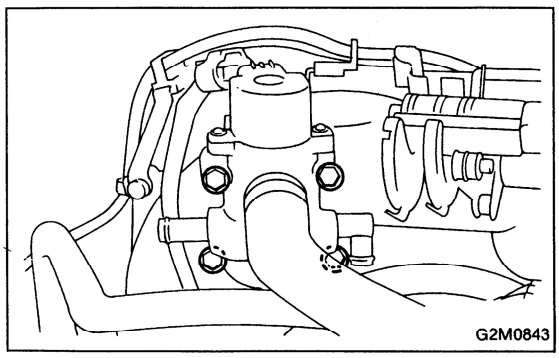

5) Remove bolts which install idle air control solenoid valve to collector chamber.
6) Installation is in the reverse order of removal procedure.

CAUTION:
Replace gasket with a new one.

Tightening torque:
6 — 7 N·m (0.6 — 0.7 kg-m, 4.3 — 5.1 ft-lb)

GETtheMANUALS.org

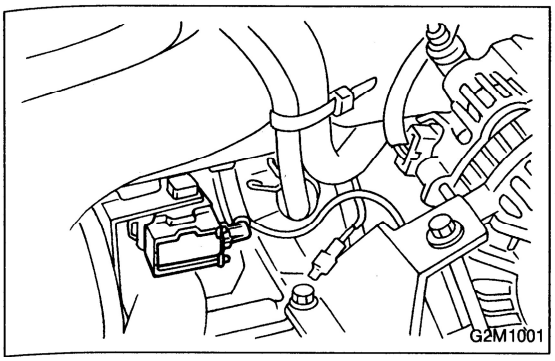

13. Purge Control Solenoid Valve

A: REMOVAL AND INSTALLATION

1) Remove bolt which installs bracket of purge control solenoid valve onto collector chamber.

2) Take out purge control solenoid valve with bracket through the bottom of the collector chamber.
3) Disconnect connector and hoses from purge control solenoid valve.
4) Installation is in the reverse order of removal.

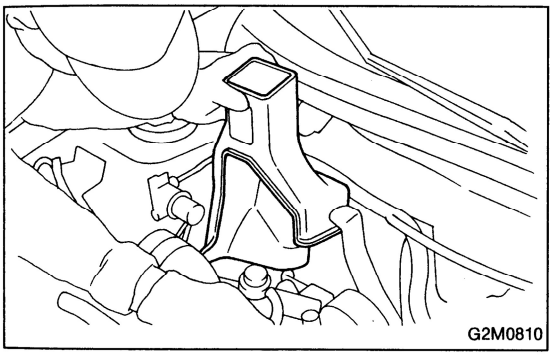

14. Turbocharger Unit

A: REMOVAL

1) Remove intercooler.
2) Remove turbocharger cooling duct.

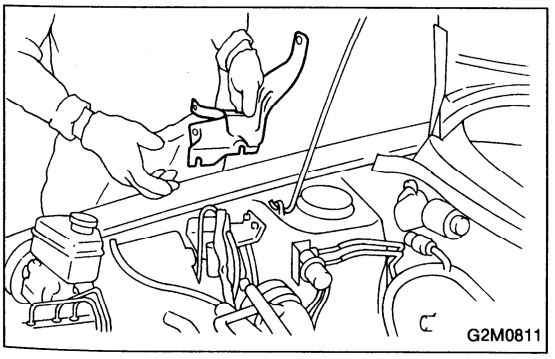

3) Remove turbocharger lower cover.

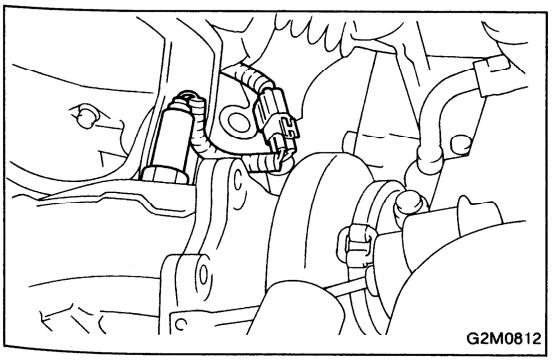

4) Disconnect connector from oxygen sensor.

GETtheMANUALS.org

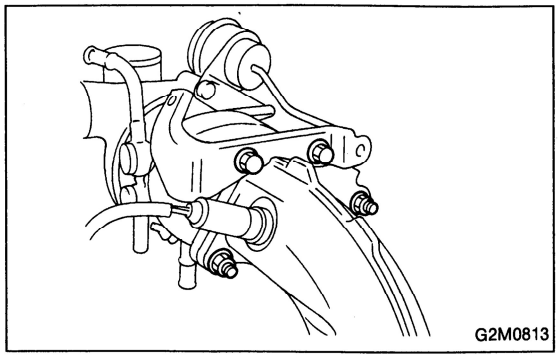

5) Remove nuts and bolts which install center exhaust pipe to turbocharger.

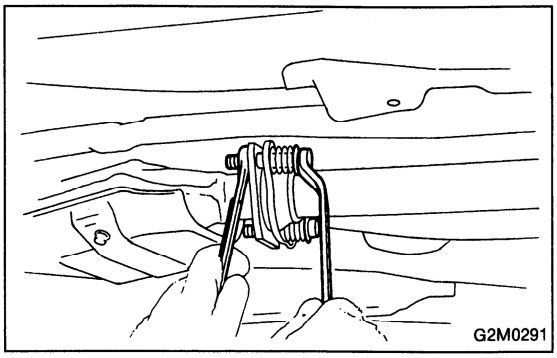

6) Lift-up the vehicle.
7) Separate center exhaust pipe from rear exhaust pipe.

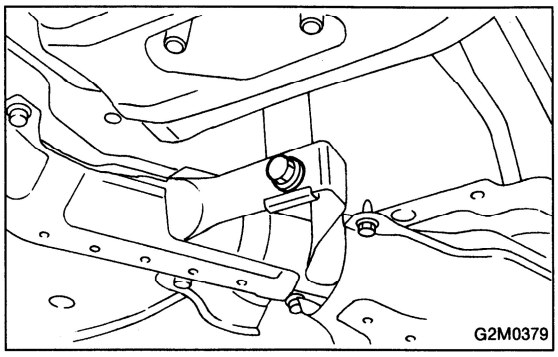

8) Remove bolt which installs center exhaust pipe to bracket.

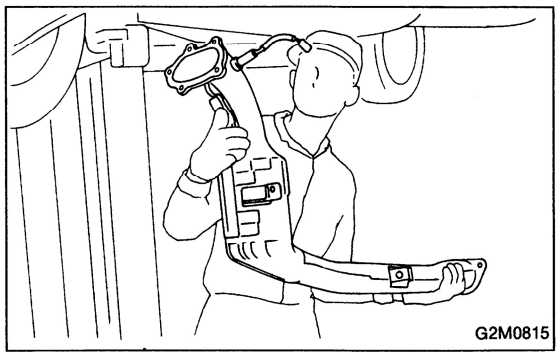

9) Remove center exhaust pipe.

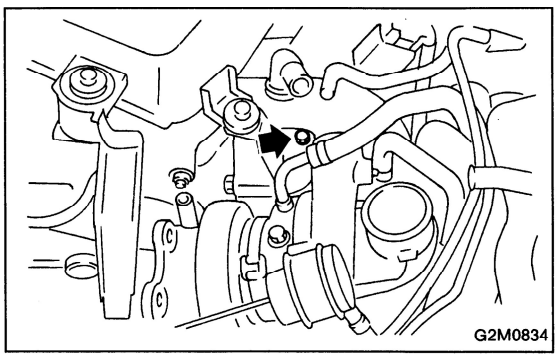

10) Lower the vehicle.
11) Separate intercooler air duct from turbocharger.

GETtheMANUALS.org

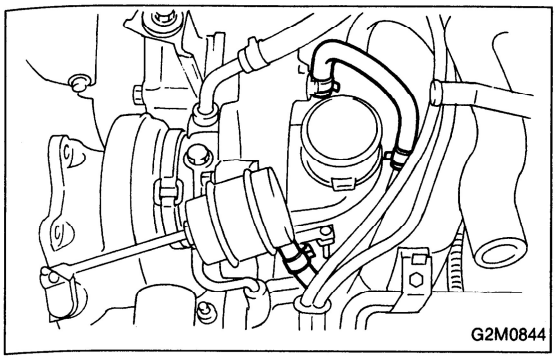

12) Disconnect hoses of pressure control line from turbocharger unit.

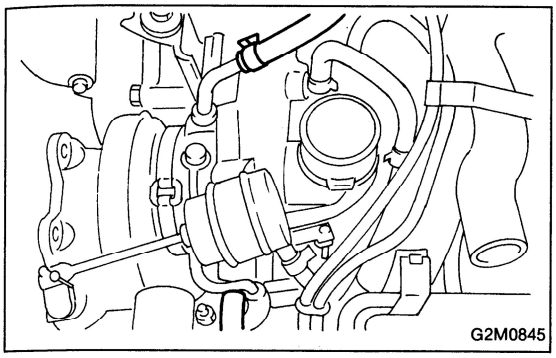

13) Disconnect engine coolant hose and engine oil hose.

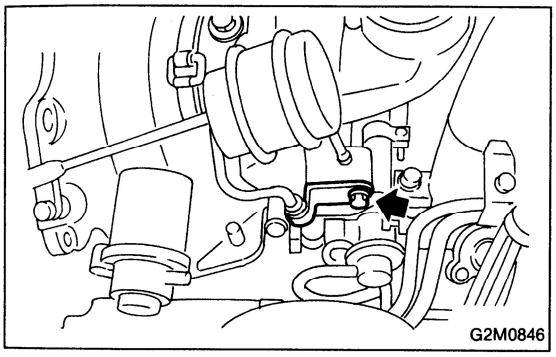

14) Remove bolt which installs oil pipe bracket onto turbocharger unit.

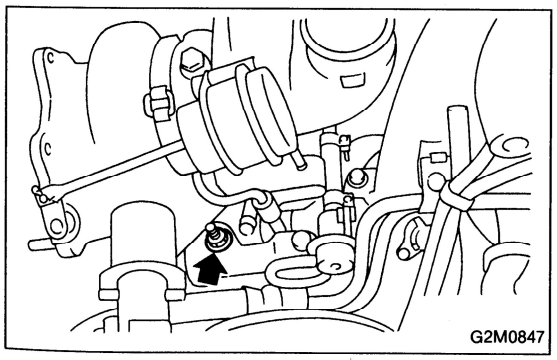

15) Remove nuts which install turbocharger unit on turbo joint pipe.

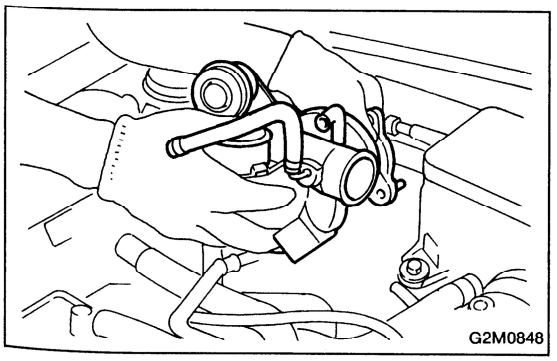

16) Remove turbocharger unit.

GETtheMANUALS.org

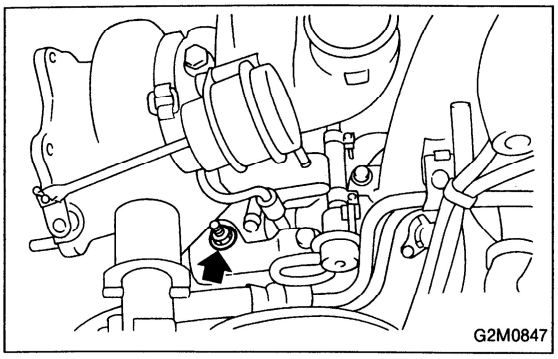

17) Installation is in the reverse order of removal procedure.

CAUTION:
- **When installing turbocharger unit, connect engine coolant outlet hose to turbocharger unit.**
- **Replace gasket with a new one.**

Tightening torque:
29 ± 3 N·m (3.0 ± 0.3 kg-m, 22 ± 2.2 ft-lb)

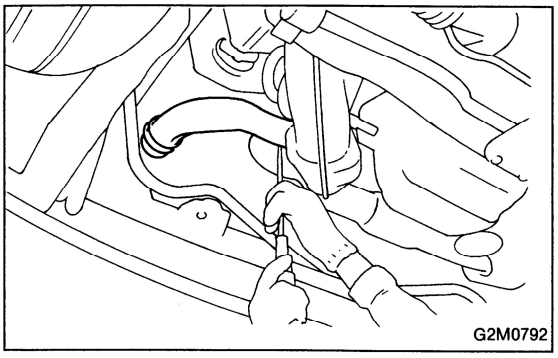

15. Fuel Injector

A: REMOVAL AND INSTALLATION

1) When removing the #1 fuel injector, remove coolant filler tank.

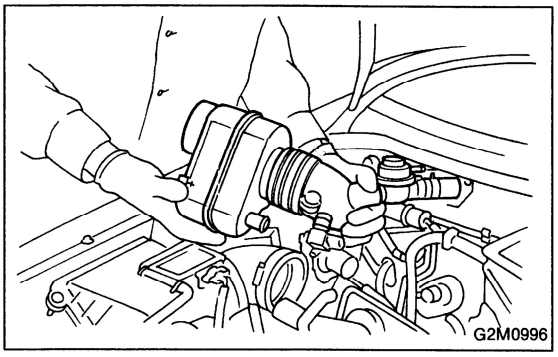

2) When removing the #3 fuel injector, remove resonator chamber and air inlet duct A.

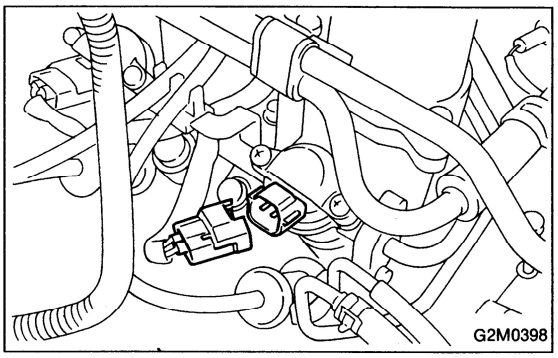

3) Release fuel pressure.
4) Disconnect connector from fuel injector.

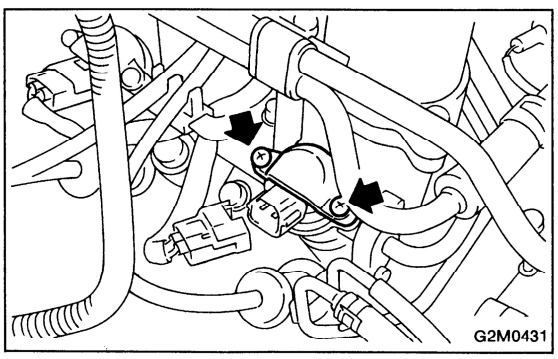

5) Remove fuel injector from fuel pipe assembly.

GETtheMANUALS.org

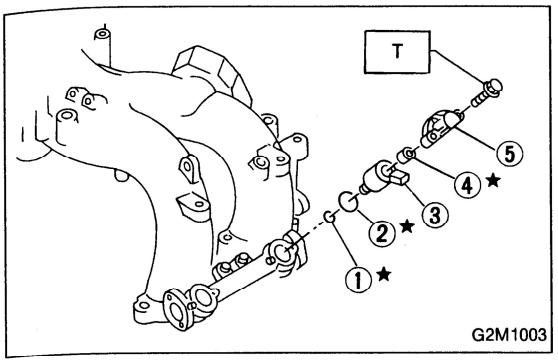

6) Installation is in the reverse order of removal.

CAUTION:
Replace O-rings and insulator.

Tightening torque:
T: 2.1 — 2.9 N·m (0.21 — 0.30 kg-m, 1.5 — 2.2 ft-lb)

① O-ring B
② O-ring A
③ Fuel injector
④ Insulator
⑤ Fuel injector cup

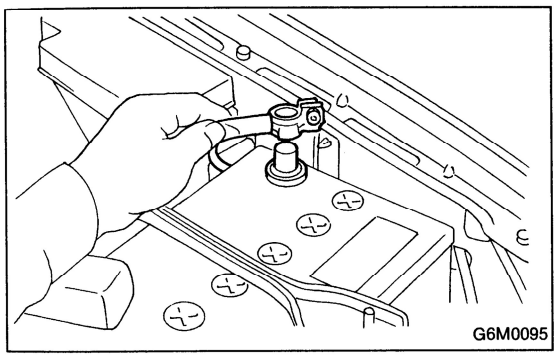

16. Engine Control Module

A: REMOVAL AND INSTALLATION

1) Disconnect battery ground cable.

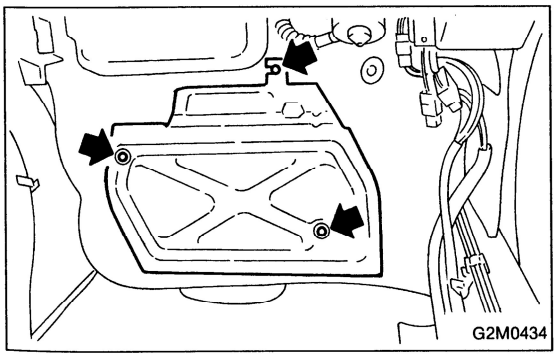

2) Detach floor mat of front passenger seat.
3) Remove protect cover.

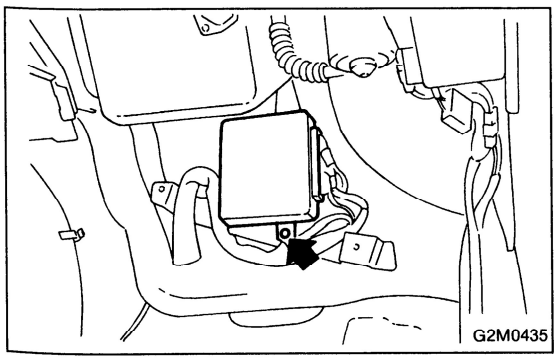

4) Remove nuts which install ECM onto body.
5) Take out ECM and disconnect connector from it.

GETtheMANUALS.org

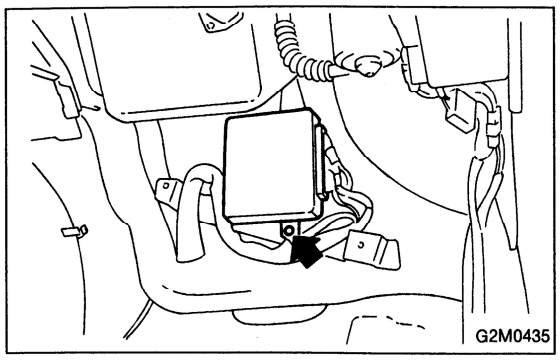

6) Installation is in the reverse order of removal.

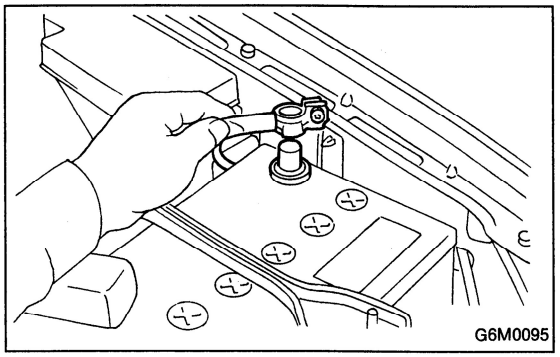

17. Main Relay and Fuel Pump Relay

A: REMOVAL AND INSTALLATION

1) Disconnect battery ground cable.

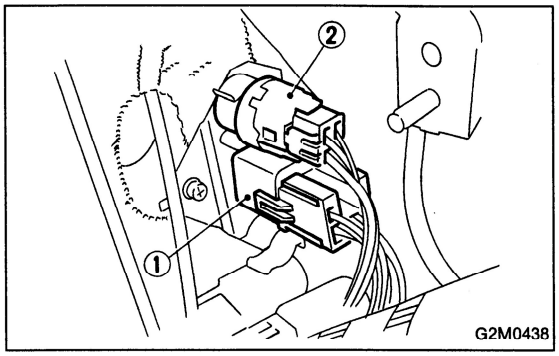

2) Remove screw which installs bracket of main relay ① and fuel pump relay ②.
3) Disconnect connectors from main relay and fuel pump relay.

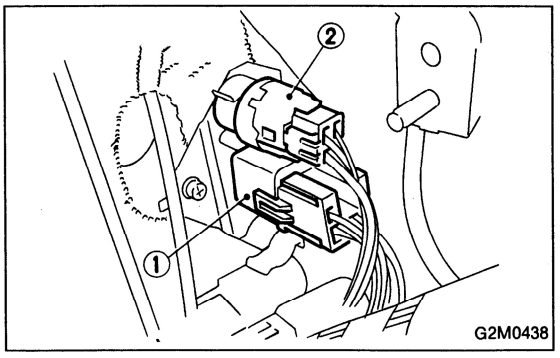

4) Installation is in the reverse order of removal.
① Main relay
② Fuel pump relay

GETtheMANUALS.org

FUEL SYSTEM 2-8

Page

S SPECIFICATIONS AND SERVICE DATA
1. Specifications
C COMPONENT PARTS 2
1. Fuel Tank 2
2. Fuel Line
W SERVICE PROCEDURE 3
1. Precautions
2. On-Car Services
3. Fuel Tank
4. Fuel Filler Pipe
5. Fuel Filter
6. Fuel Pump
7. Fuel Meter Unit
8. Fuel Delivery, Return and Evaporation Lines
9. Canister
10. Fuel Sub Meter Unit (Turbo model only) 3
11. Fuel Cut Valve (AWD model only) 4
T DIAGNOSTICS
1. Fuel System

GETtheMANUALS.org

1. Fuel Tank

3. TURBO MODEL

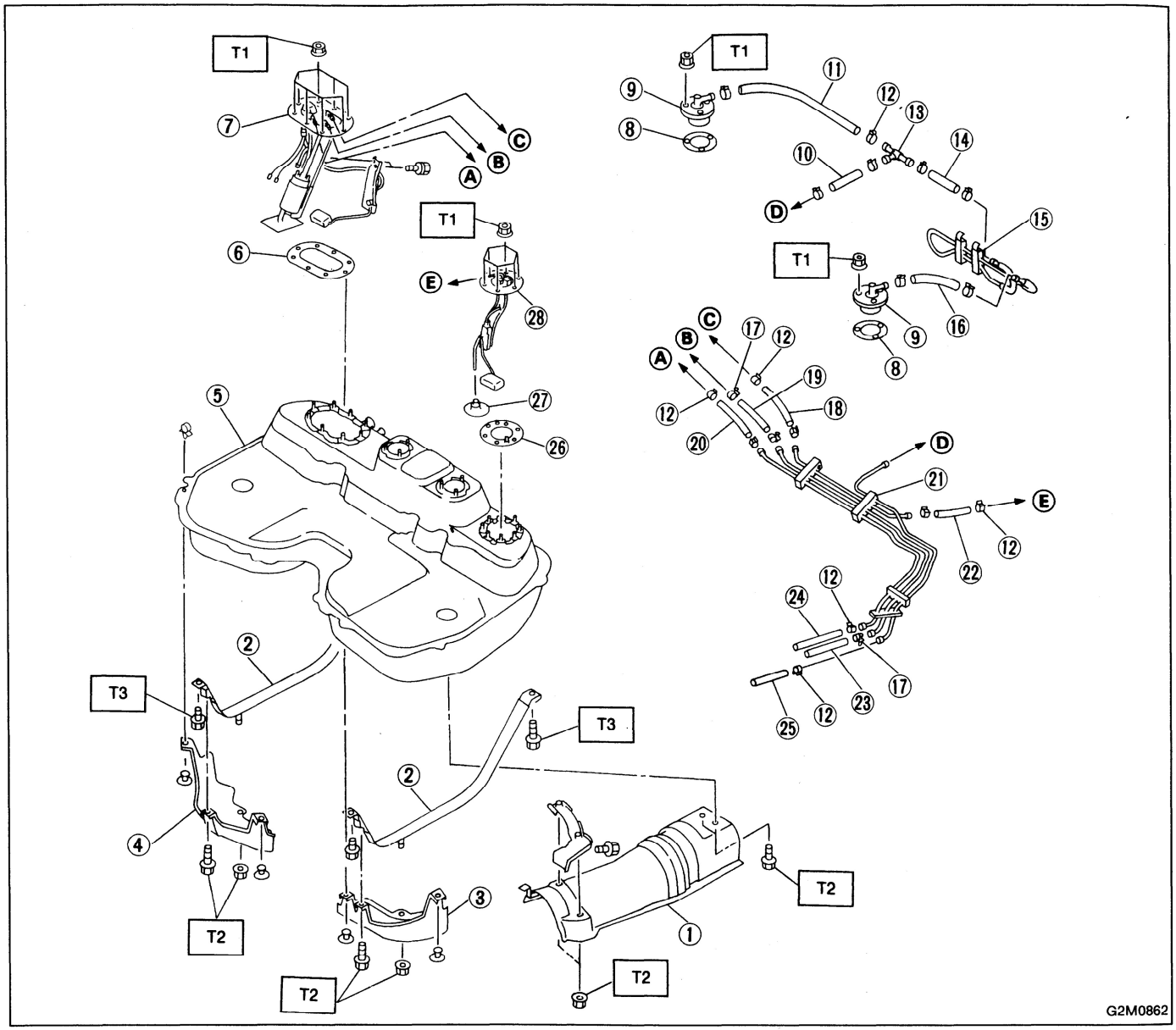

① Heat sealed cover
② Fuel tank band
③ Protector LH
④ Protector RH
⑤ Fuel tank
⑥ Fuel pump gasket
⑦ Fuel pump ASSY
⑧ Fuel cut valve gasket
⑨ Fuel cut valve
⑩ Evaporation hose C
⑪ Evaporation hose A
⑫ Clip
⑬ Joint pipe
⑭ Evaporation hose B
⑮ Evaporation pipe ASSY
⑯ Evaporation hose D
⑰ Clamp
⑱ Jet pump hose A
⑲ Fuel delivery hose A
⑳ Fuel return hose A
㉑ Fuel pipe ASSY
㉒ Jet pump hose B
㉓ Fuel delivery hose B
㉔ Fuel return hose B
㉕ Evaporation hose E
㉖ Fuel sub meter gasket
㉗ Jet pump filter
㉘ Fuel sub meter unit

Tightening torque: N·m (kg-m, ft-lb)
T1: 3 — 6 (0.3 — 0.6, 2.2 — 4.3)
T2: 5.5 — 9.5 (0.56 — 0.97, 4.1 — 7.0)
T3: 23 — 43 (2.3 — 4.4, 17 — 32)

GETtheMANUALS.org

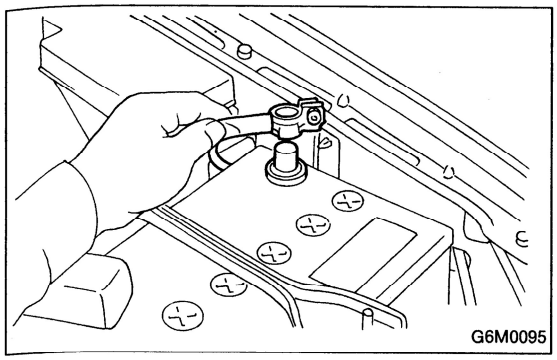
G6M0095

10. Fuel Sub Meter Unit (Turbo model only)

A: REMOVAL AND INSTALLATION

1) Disconnect battery ground cable.

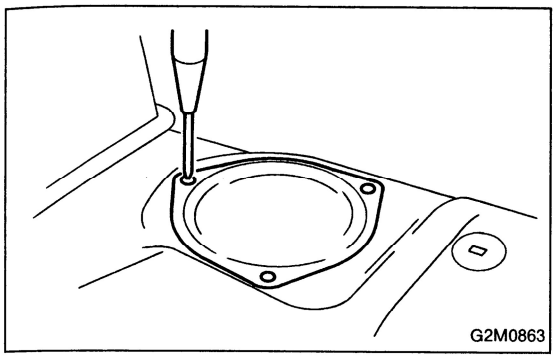
G2M0863

2) Remove rear seat.
3) Remove service hole cover.

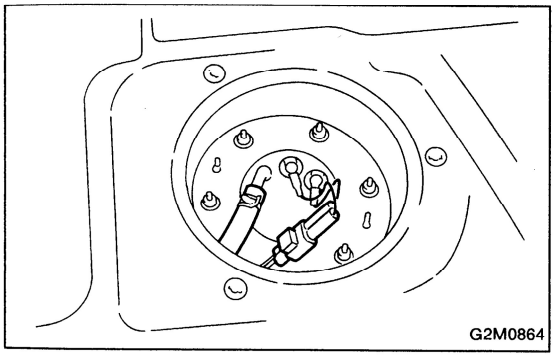
G2M0864

4) Disconnect connector from fuel sub meter.
5) Disconnect fuel jet pump hose.

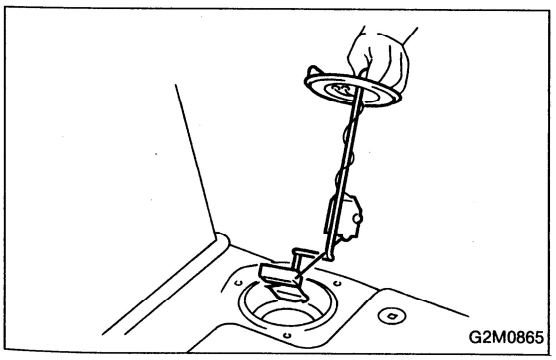
G2M0865

6) Remove fuel sub meter unit.

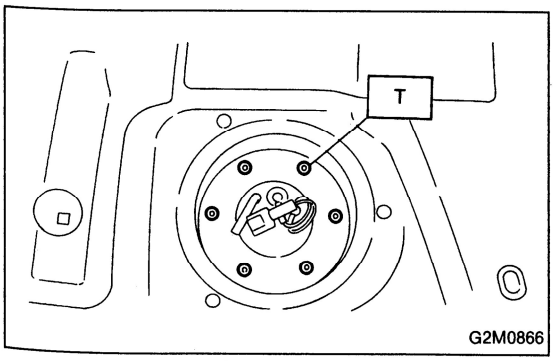

G2M0866

7) Installation is in the reverse order of removal procedure.

Tightening torque:
T: 3 — 6 N·m (0.3 — 0.6 kg-m, 2.2 — 4.3 ft-lb)

GETtheMANUALS.org

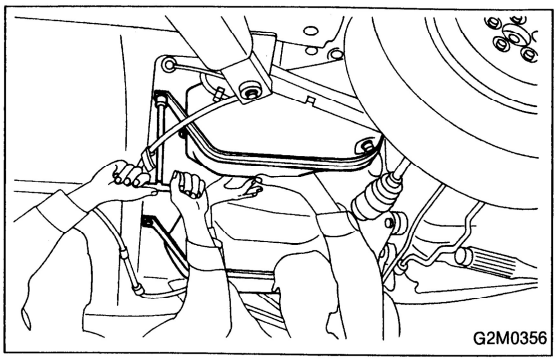
G2M0356

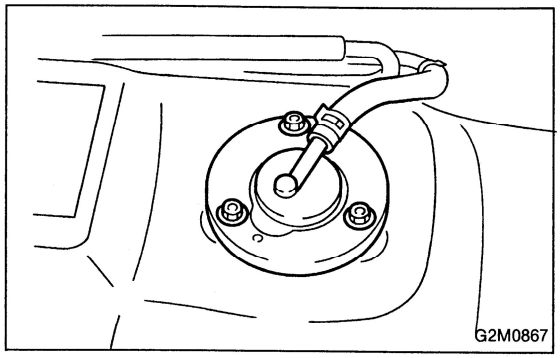
G2M0867

11. Fuel Cut Valve (AWD model only)

A: REMOVAL AND INSTALLATION

1) Remove fuel tank.

2) Disconnect evaporation hose from fuel cut valve.
3) Remove fuel cut valve.
4) Installation is in the reverse order of removal procedure.

Tightening torque:
3 — 6 N·m (0.3 — 0.6 kg-m, 2.2 — 4.3 ft-lb)

GETtheMANUALS.org

EXHAUST SYSTEM 2-9

Page

C COMPONENT PARTS 2
1. Exhaust System
2. Exhaust System (Turbo model) 2

W SERVICE PROCEDURE 4
1. Front Exhaust Pipe and Center Exhaust Pipe
2. Rear Exhaust Pipe
3. Muffler
4. Front Exhaust Pipe (Turbo model) 4
5. Center Exhaust Pipe (Turbo model) 6

- The descriptions in this section apply to the turbo model.

GETtheMANUALS.org

2. Exhaust System (Turbo model)

1. FRONT EXHAUST PIPE

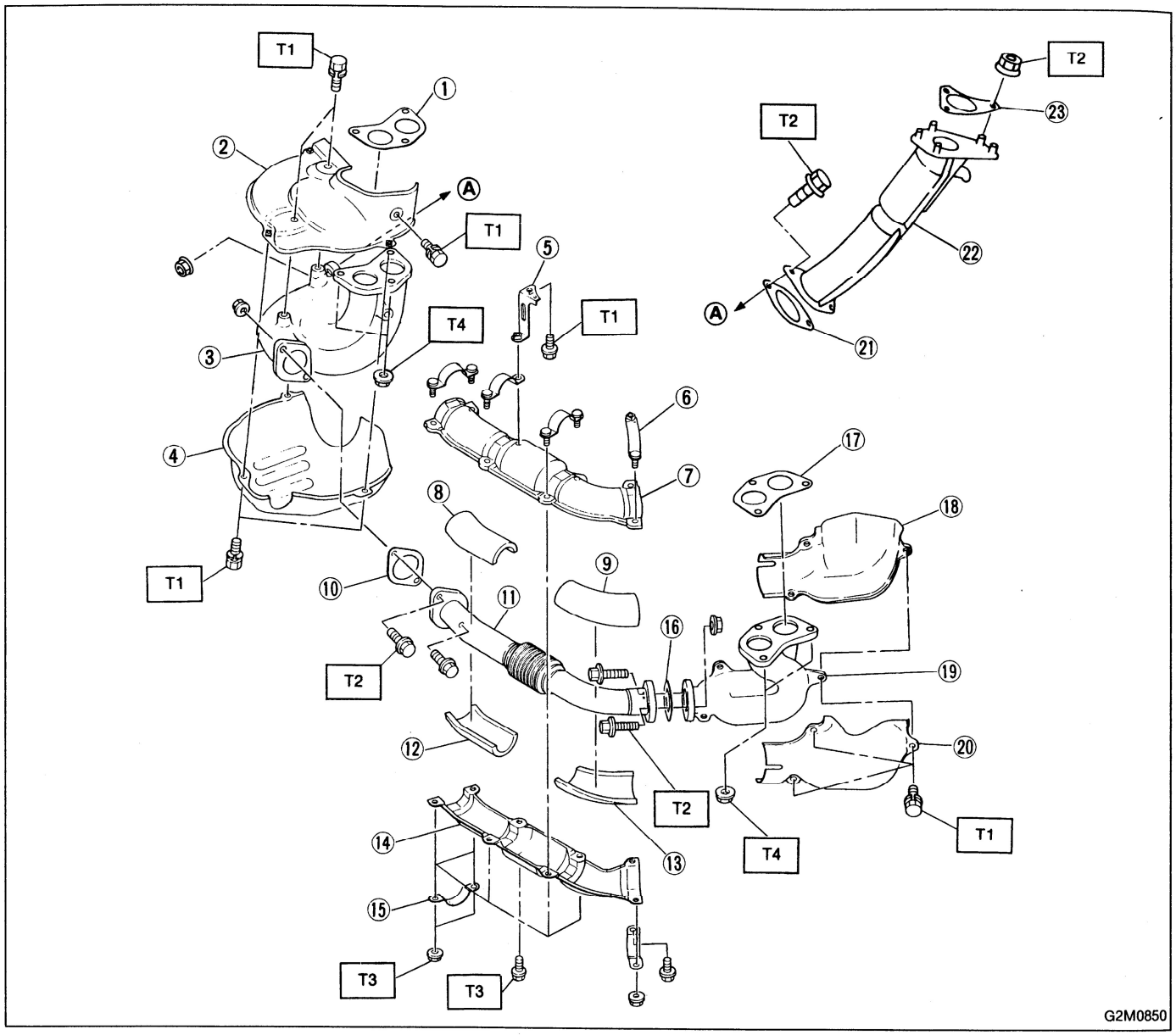

① Gasket
② Upper exhaust manifold cover (RH)
③ Exhaust manifold (RH)
④ Lower exhaust manifold cover (RH)
⑤ Bracket
⑥ Upper clamp B
⑦ Upper cover C
⑧ Upper insulator B
⑨ Upper insulator A
⑩ Gasket
⑪ Front joint pipe
⑫ Lower insulator B
⑬ Lower insulator A
⑭ Lower cover C
⑮ Lower clamp B
⑯ Gasket
⑰ Gasket
⑱ Upper exhaust manifold cover (LH)
⑲ Exhaust manifold (LH)
⑳ Lower exhaust manifold cover (LH)
㉑ Gasket
㉒ Turbocharger joint pipe
㉓ Gasket

Tightening torque: N·m (kg-m, ft-lb)
T1: 17 — 20 (1.7 — 2.0, 12 — 14)
T2: 25 — 35 (2.6 — 3.6, 19 — 26)
T3: 30 — 40 (3.1 — 4.1, 22 — 30)
T4: 34 — 44 (3.5 — 4.5, 25 — 33)

GETtheMANUALS.org

2. CENTER AND REAR EXHAUST PIPE, AND MUFFLER

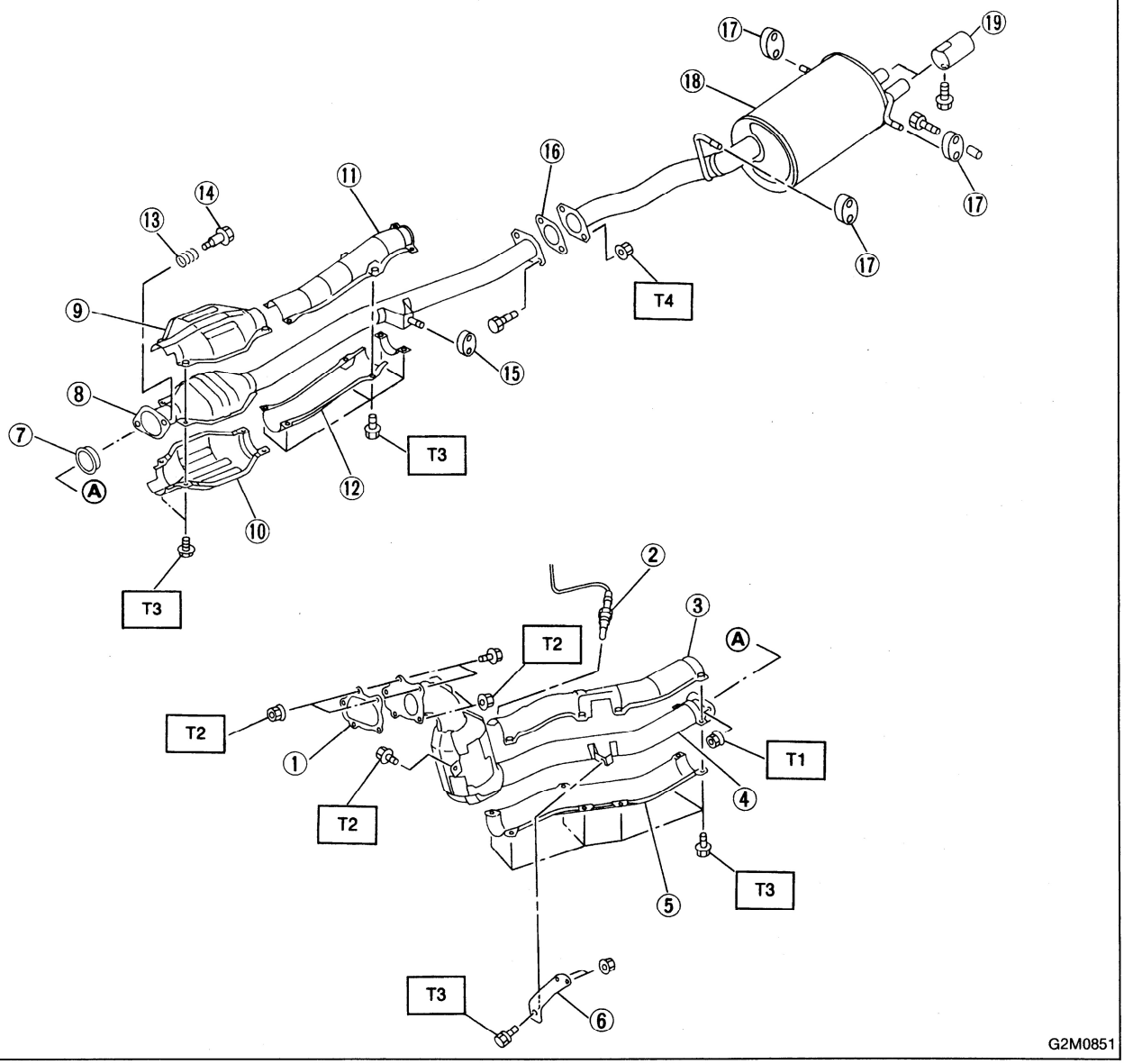

① Gasket
② Oxygen sensor
③ Upper center pipe cover
④ Center exhaust pipe
⑤ Lower center pipe cover
⑥ Bracket (MT)
⑦ Gasket
⑧ Rear exhaust pipe
⑨ Upper cover
⑩ Lower cover
⑪ Upper cover A
⑫ Lower cover A
⑬ Spring
⑭ Bolt
⑮ Cushion
⑯ Gasket
⑰ Cushion
⑱ Muffler
⑲ Muffler cutter

Tightening torque: N·m (kg-m, ft-lb)
T1: 13 — 23 (1.3 — 2.3, 9 — 17)
T2: 25 — 35 (2.6 — 3.6, 19 — 26)
T3: 30 — 40 (3.1 — 4.1, 22 — 30)
T4: 43 — 53 (4.4 — 5.4, 32 — 39)

GETtheMANUALS.org

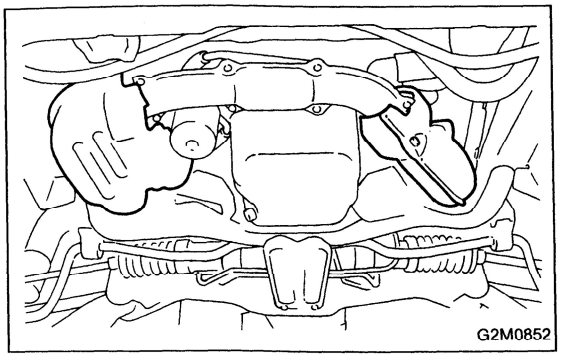
G2M0852

4. Front Exhaust Pipe (Turbo model)

A: REMOVAL

1) Remove lower exhaust manifold cover (RH).
2) Remove lower and upper exhaust manifold covers (LH).

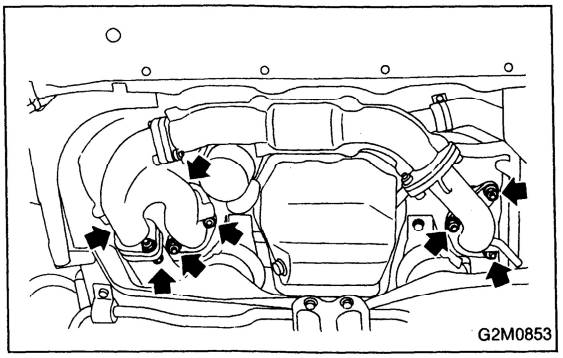
G2M0853

3) Remove bolts and nuts which hold front exhaust pipe assembly to turbocharger joint pipe.
4) While holding front exhaust pipe assembly with one hand, remove nuts which hold front exhaust pipe assembly to cylinder head exhaust port.
5) Remove front exhaust pipe assembly.

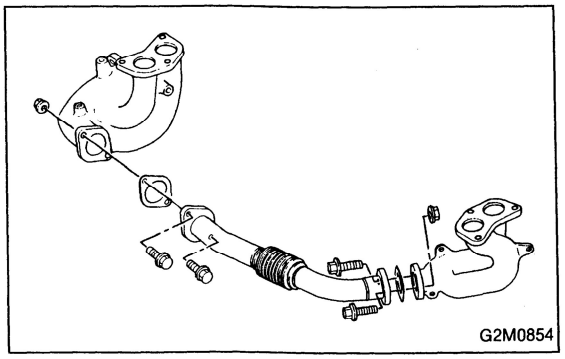
G2M0854

6) Remove covers from exhaust manifold and front exhaust pipe.
7) Separate front exhaust pipe from exhaust manifolds.

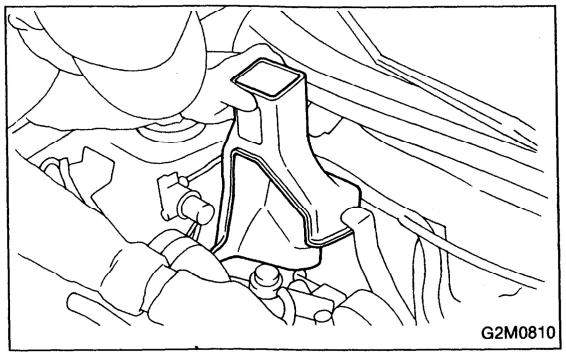
G2M0810

8) Remove turbocharger cooling duct.

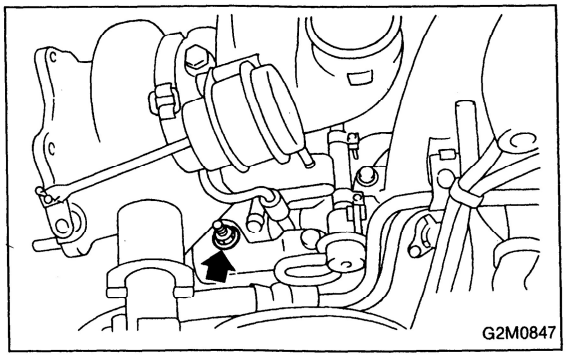
G2M0847

9) Remove turbocharger joint pipe.

GETtheMANUALS.org

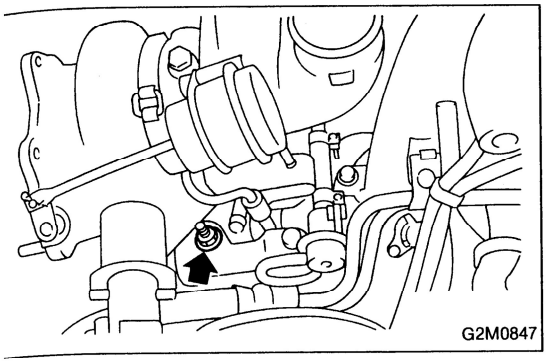
G2M0847

B: INSTALLATION

CAUTION:
Replace gaskets with new ones.

1) Install turbocharger joint pipe.

Tightening torque:
25 — 35 N·m (2.6 — 3.6 kg-m, 19 — 26 ft-lb)

2) Install turbocharger cooling duct.

Tightening torque:
5.4 — 9.3 N·m (0.55 — 0.95 kg-m, 4.0 — 6.9 ft-lb)

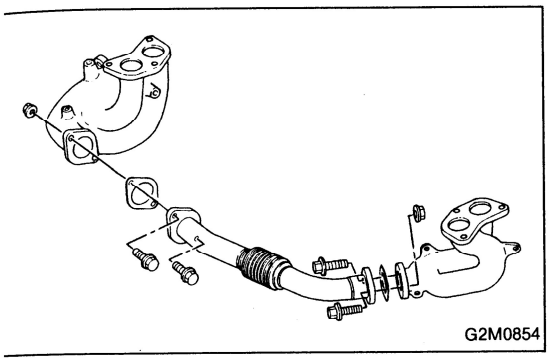
G2M0854

3) Assemble front exhaust pipe and exhaust manifolds.

Tightening torque:
25 — 35 N·m (2.6 — 3.6 kg-m, 19 — 26 ft-lb)

4) Install front exhaust pipe covers.

Tightening torque:
30 — 40 N·m (3.1 — 4.1 kg-m, 22 — 30 ft-lb)

5) Install upper exhaust manifold cover (RH).

Tightening torque:
17 — 20 N·m (1.7 — 2.0 kg-m, 12 — 14 ft-lb)

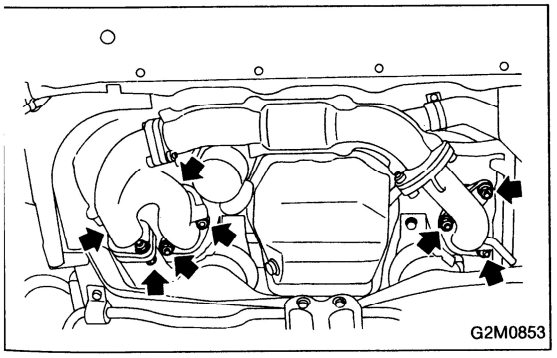
G2M0853

6) Install front exhaust pipe assembly.

Tightening torque:
34 — 44 N·m (3.5 — 4.5 kg-m, 25 — 33 ft-lb)

7) Connect exhaust manifold (RH) to turbocharger joint pipe.

Tightening torque:
25 — 35 N·m (2.6 — 3.6 kg-m, 19 — 26 ft-lb)

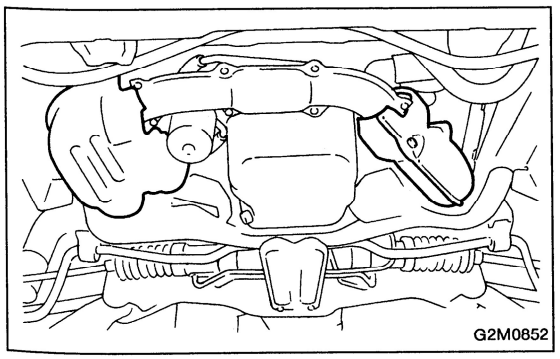
G2M0852

8) Install upper and lower exhaust manifold covers (LH).

Tightening torque:
17 — 20 N·m (1.7 — 2.0 kg-m, 12 — 14 ft-lb)

9) Install lower exhaust manifold cover (RH).

Tightening torque:
17 — 20 N·m (1.7 — 2.0 kg-m, 12 — 14 ft-lb)

GETtheMANUALS.org

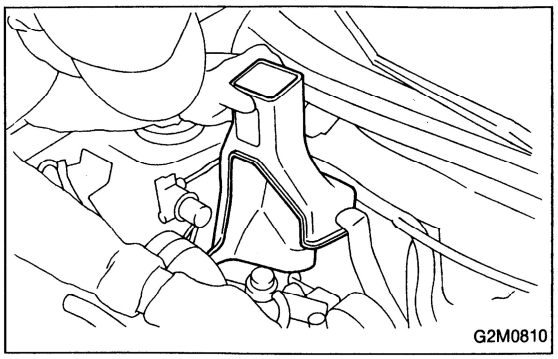
G2M0810

5. Center Exhaust Pipe (Turbo model)

A: REMOVAL

1) Remove turbocharger cooling duct.

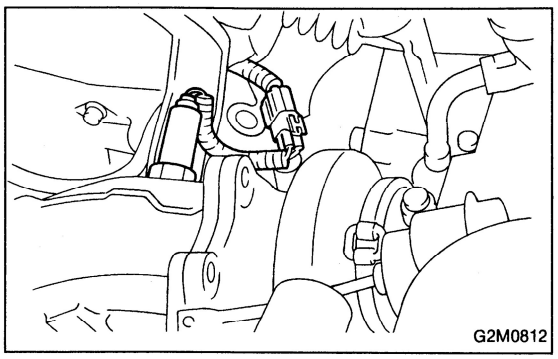
G2M0812

2) Disconnect connector from oxygen sensor.

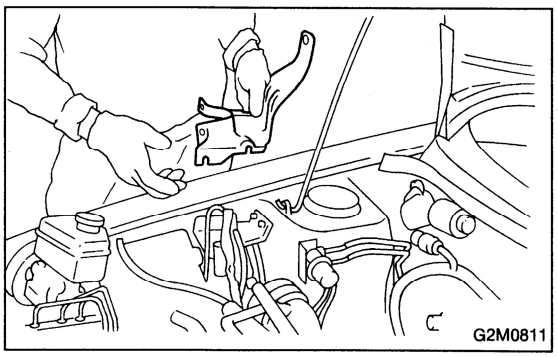
G2M0811

3) Remove turbocharger lower cover.

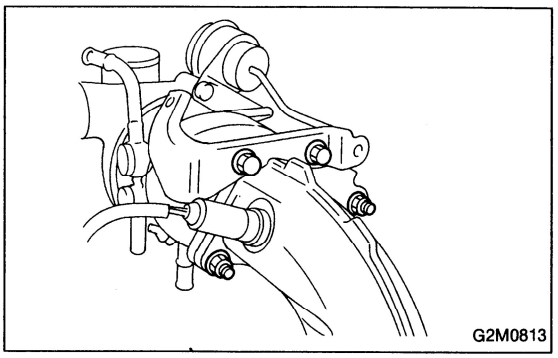
G2M0813

4) Separate center exhaust pipe from turbocharger.

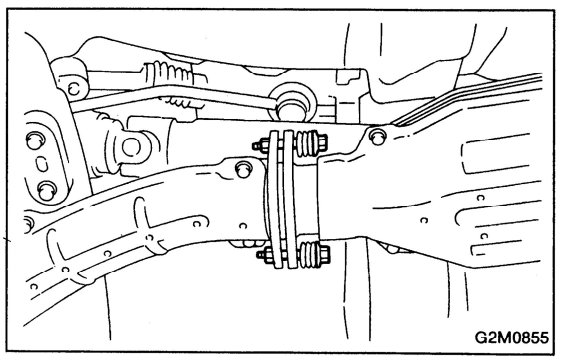
G2M0855

5) Separate center exhaust pipe from rear exhaust pipe.

GETtheMANUALS.org

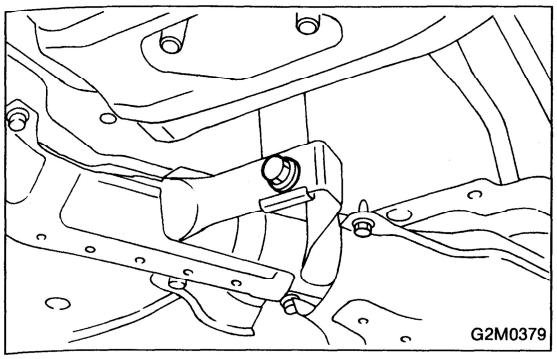
G2M0379

6) Remove intercooler bracket.
7) Remove bolt which holds center exhaust pipe to hanger bracket.

CAUTION:
Be careful not to pull down center exhaust pipe.

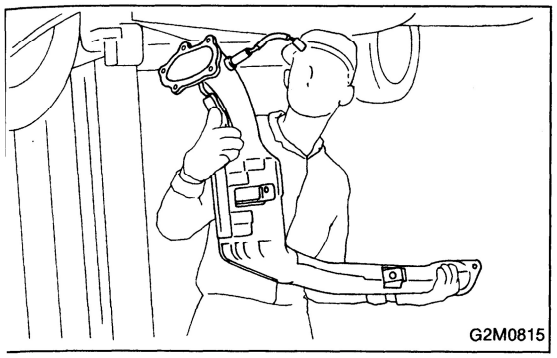
G2M0815

8) Remove center exhaust pipe.

B: INSTALLATION

CAUTION:
Replace gaskets with new ones.

1) Install center exhaust pipe and temporarily tighten bolt which holds center exhaust pipe to hanger bracket.

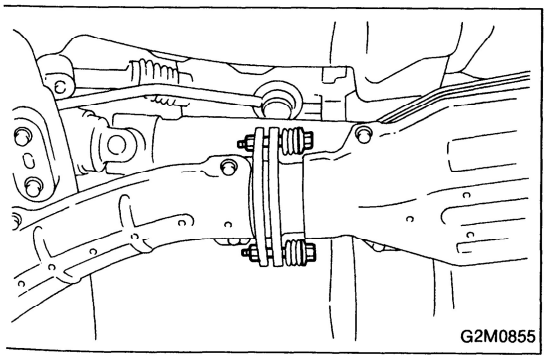
G2M0855

2) Install center exhaust pipe to rear exhaust pipe.

Tightening torque:
13 — 23 N·m (1.3 — 2.3 kg-m, 9 — 17 ft-lb)

3) Install intercooler bracket and loosely tighten bolts.

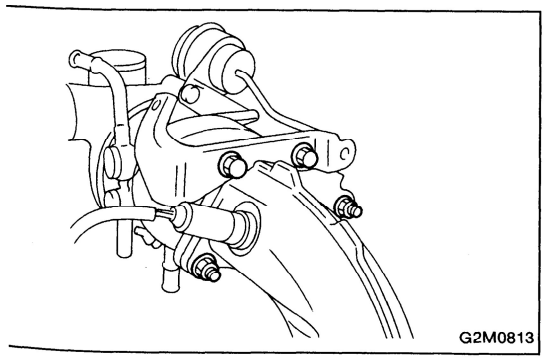
G2M0813

4) Connect center exhaust pipe to turbocharger.

Tightening torque:
25 — 35 N·m (2.6 — 3.6 kg-m, 19 — 26 ft-lb)

GETtheMANUALS.org

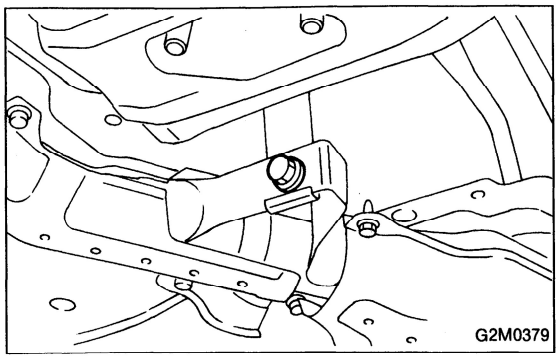

5) Tighten bolt which holds center exhaust pipe to hanger bracket.

Tightening torque:
30 — 40 N·m (3.1 — 4.1 kg-m, 22 — 30 ft-lb)

6) Tighten bolts which hold intercooler bracket.

Tightening torque:
30 — 40 N·m (3.1 — 4.1 kg-m, 22 — 30 ft-lb)

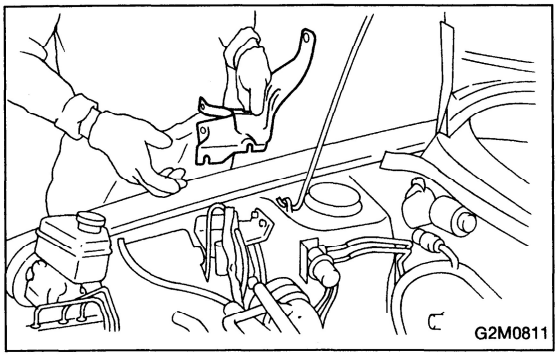

7) Install turbocharger lower cover.

Tightening torque:
5.4 — 9.3 N·m (0.55 — 0.95 kg-m, 4.0 — 6.9 ft-lb)

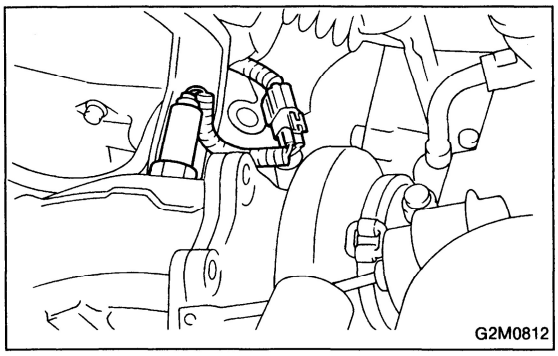

8) Connect connector to oxygen sensor.

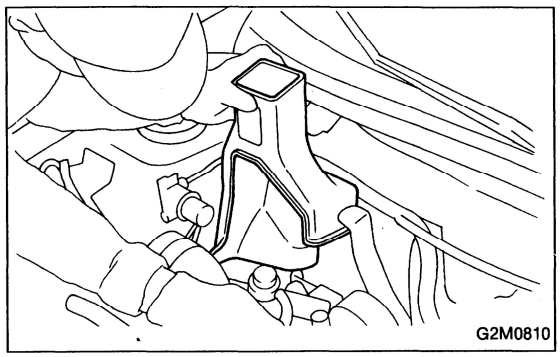

9) Install turbocharger cooling duct.

Tightening torque:
5.4 — 9.3 N·m (0.55 — 0.95 kg-m, 4.0 — 6.9 ft-lb)

GETtheMANUALS.org

CLUTCH 2-10

Page

S SPECIFICATIONS AND SERVICE DATA 2
1. Clutch System 2
C COMPONENT PARTS 3
1. Clutch System 3
2. Clutch System (Hydraulic application type) 4
3. Master Cylinder and Reservoir Tank 6
W SERVICE PROCEDURE 8
1. General 8
2. On-Car Service 8
3. Release Bearing and Lever 9
4. Clutch Disc and Cover 11
5. Operating Cylinder 12
6. Master Cylinder and Reservoir Tank (LHD Model) 13
7. Master Cylinder and Reservoir Tank (RHD Model) 15
8. Clutch Damper (LHD Model) 17
T DIAGNOSTICS
1. Clutch System

GETtheMANUALS.org

1. Clutch System

A: SPECIFICATIONS

		FWD		AWD		
		1600 cc	1800 cc	1600 cc	1800 cc	2000 cc TURBO
Clutch cover	Type	Push type				Pull type
	Diaphragm set load kg (lb)	400 (882)		440 (970)	450 (992)	700 (1,544)
Clutch disc	Facing material	Woven (Non asbestos)				
	O.D. x I.D. x thickness mm (in)	190 x 132 x 3.5 (7.48 x 5.20 x 0.138)	200 x 130 x 3.5 (7.87 x 5.12 x 0.138)	215 x 150 x 3.5 (8.46 x 5.91 x 0.138)	225 x 150 x 3.5 (8.86 x 5.91 x 0.138)	
	Spline O.D. mm (in)	22.2 (0.874), (No. of teeth: 21)		25.2 (0.992), (No. of teeth: 24)		
Clutch release lever ratio		3.0				1.7
Release bearing		Grease-packed self-aligning				

B: SERVICE DATA

			FWD		AWD		
			1600 cc	1800 cc	1600 cc	1800 cc	2000 cc TURBO
Clutch pedal	Full stroke mm (in)		140 — 150 (5.51 — 5.91)				145 — 150 (5.71 — 5.91)
Release lever	Stroke mm (in)		24 — 26 (0.94 — 1.02)				13.3 — 14.7 (0.524 — 0.579)
	Play at release lever center mm (in)		3 — 4 (0.12 — 0.16)				
Clutch disc	Depth of rivet head mm (in)	Standard	1.3 — 1.9 (0.051 — 0.075)	1.4 (0.055)	1.3 — 1.9 (0.051 — 0.075)		
		Limit of sinking	0.3 (0.012)				
	Limit for deflection mm (in)		1.0 (0.039) at R = 90 (3.54)	1.0 (0.039) at R = 95 (3.74)	1.0 (0.039) at R = 102 (4.02)	1.0 (0.039) at R = 107 (4.21)	

GETtheMANUALS.org

1. Clutch System

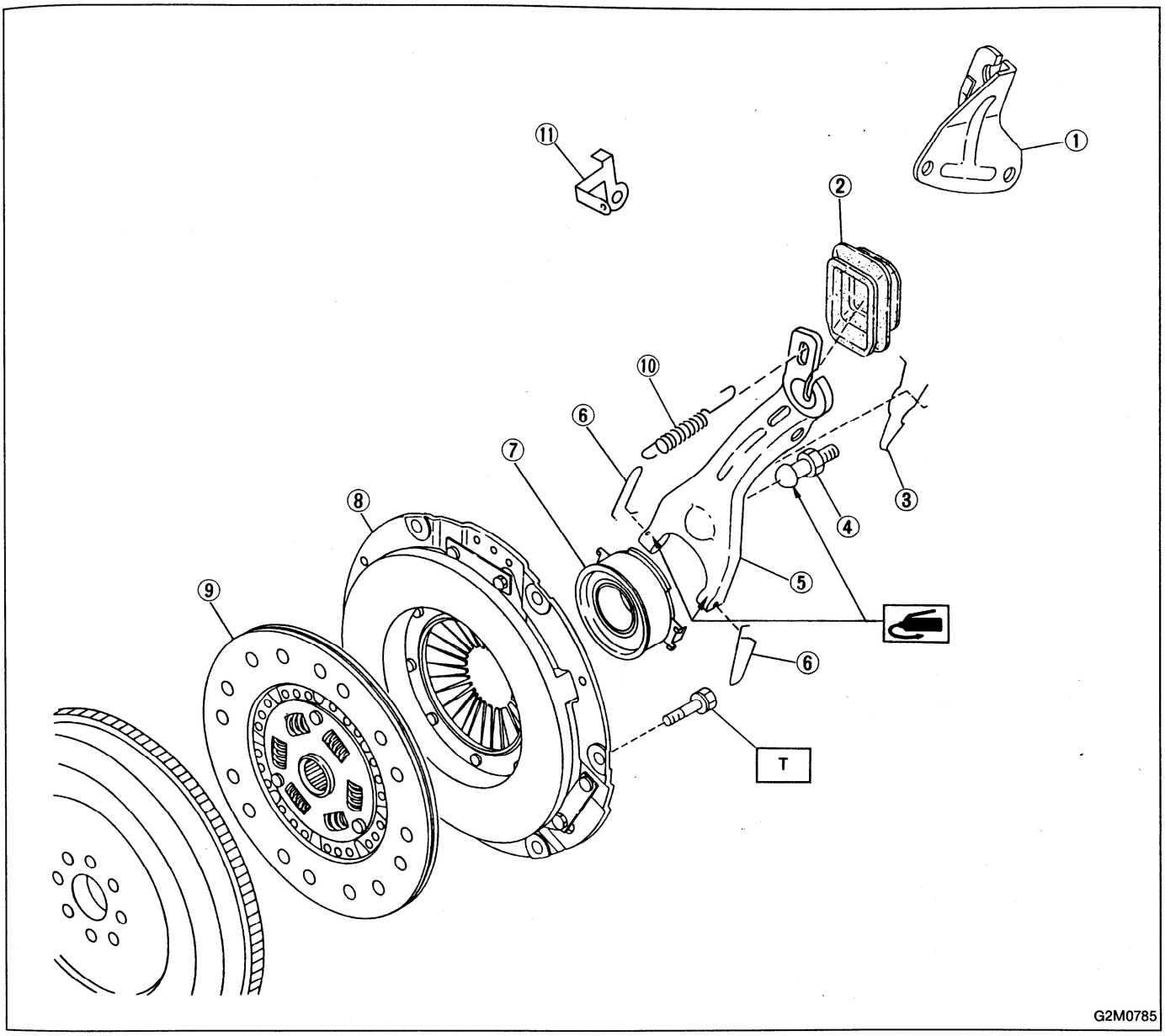

① Clutch cable bracket
② Clutch release lever sealing
③ Retainer spring
④ Pivot
⑤ Clutch release lever
⑥ Clip
⑦ Clutch release bearing
⑧ Clutch cover
⑨ Clutch disc
⑩ Return spring
⑪ Clutch return spring bracket

Tightening torque: N·m (kg-m, ft-lb)
T: 15.7 ± 1.5 (1.6 ± 0.15, 11.6 ± 1.1)

GETtheMANUALS.org

2. Clutch System (Hydraulic application type)

1. LHD MODEL

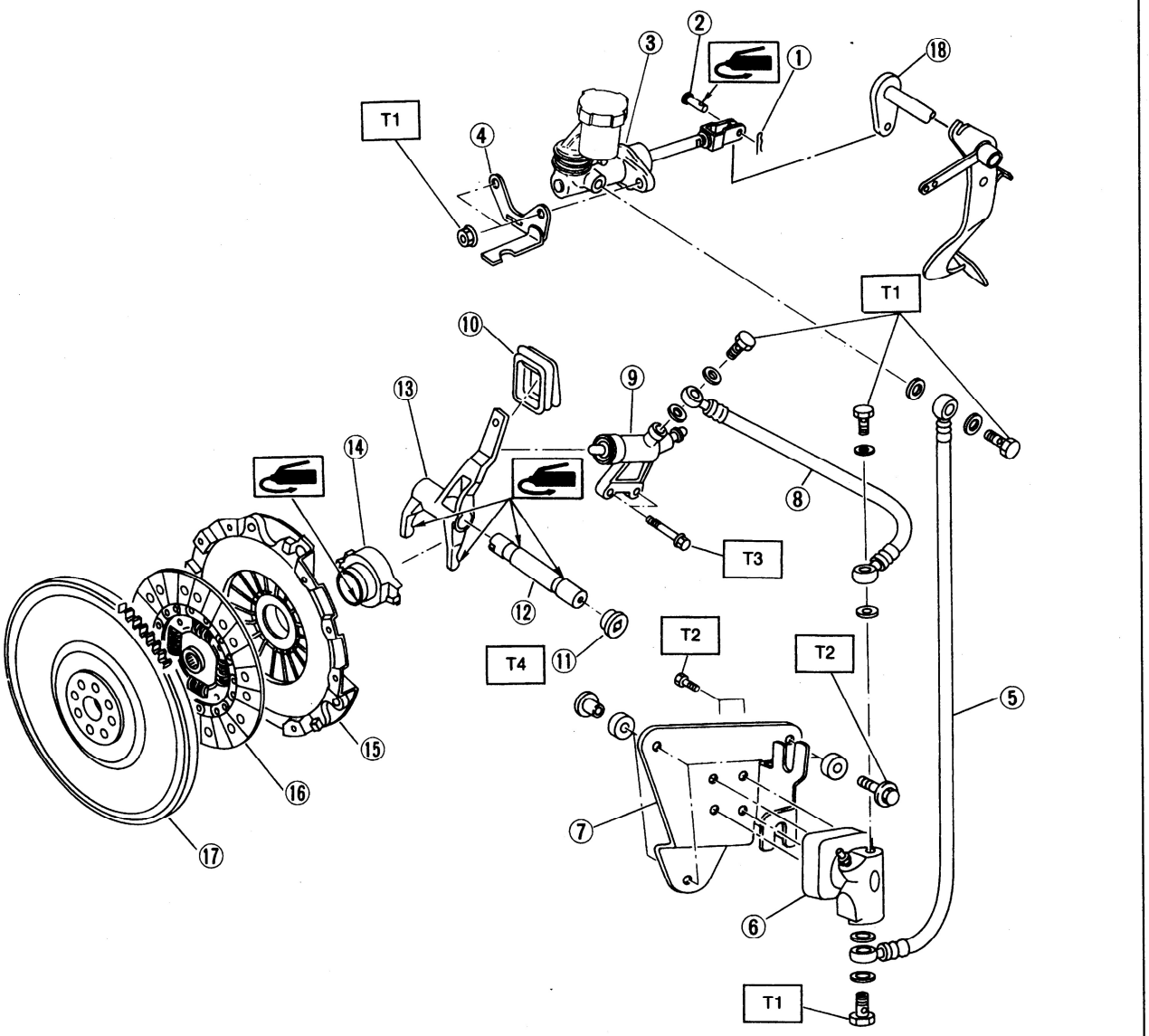

① Snap pin
② Clevis pin
③ Master cylinder ASSY
④ Bracket
⑤ Clutch hose
⑥ Clutch damper
⑦ Damper bracket
⑧ Clutch hose
⑨ Operating cylinder
⑩ Release lever dust cover
⑪ Plug
⑫ Release lever shaft
⑬ Release lever
⑭ Release bearing
⑮ Clutch cover
⑯ Clutch disc
⑰ Flywheel
⑱ Spacer

Tightening torque: N·m (kg-m, ft-lb)
T1: 18 ± 3 (1.8 ± 0.3, 13.0 ± 2.2)
T2: 25 ± 7 (2.5 ± 0.7, 18.1 ± 5.1)
T3: 37 ± 3 (3.8 ± 0.3, 27.5 ± 2.2)
T4: 44 ± 3 (4.5 ± 0.3, 32.5 ± 2.2)

GETtheMANUALS.org

2. RHD MODEL

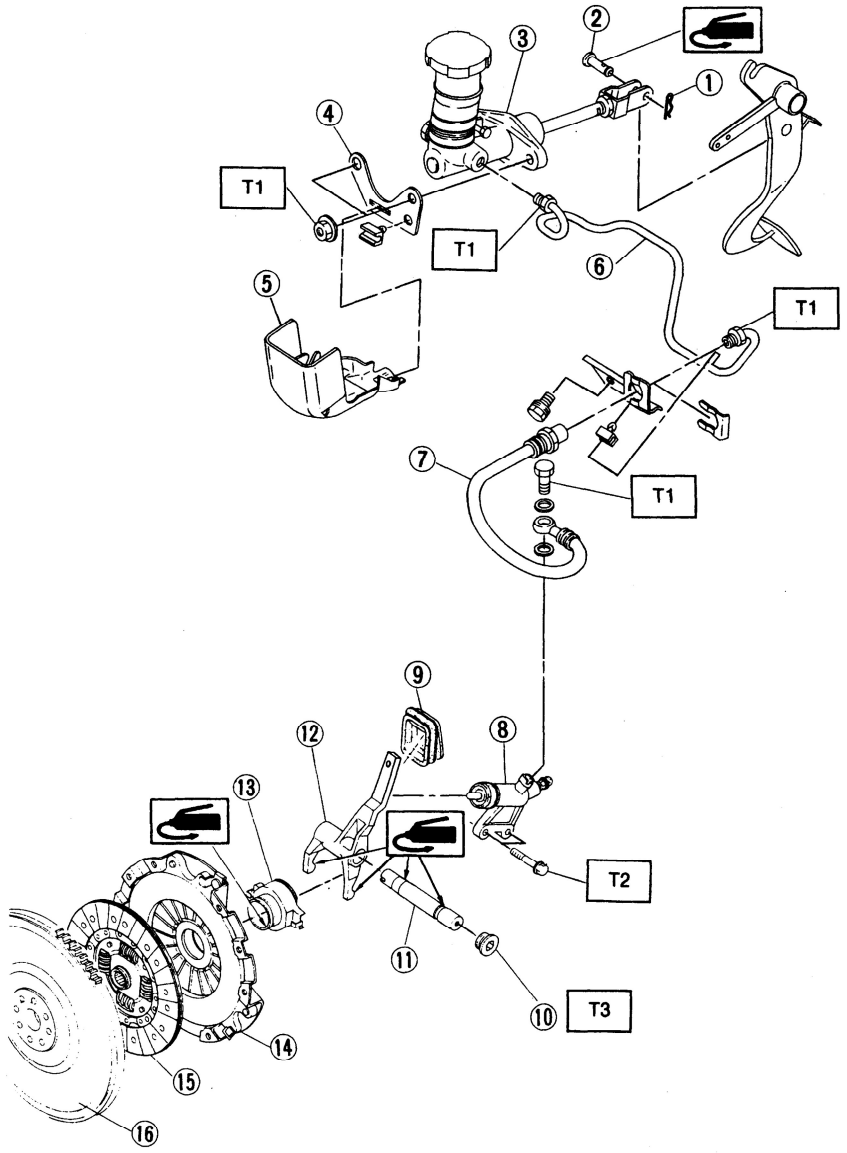

G2M0974

① Snap pin
② Clevis pin
③ Master cylinder ASSY
④ Bracket
⑤ Sealed cover
⑥ Clutch pipe
⑦ Clutch hose
⑧ Operating cylinder
⑨ Release lever dust cover
⑩ Plug
⑪ Release lever shaft
⑫ Release lever
⑬ Release bearing
⑭ Clutch cover
⑮ Clutch disc
⑯ Flywheel

Tightening torque: N·m (kg-m, ft-lb)
T1: 18 ± 3 (1.8 ± 0.3, 13.0 ± 2.2)
T2: 37 ± 3 (3.8 ± 0.3, 27.5 ± 2.2)
T3: 44 ± 3 (4.5 ± 0.3, 32.5 ± 2.2)

GETtheMANUALS.org

3. Master Cylinder and Reservoir Tank

1. LHD MODEL

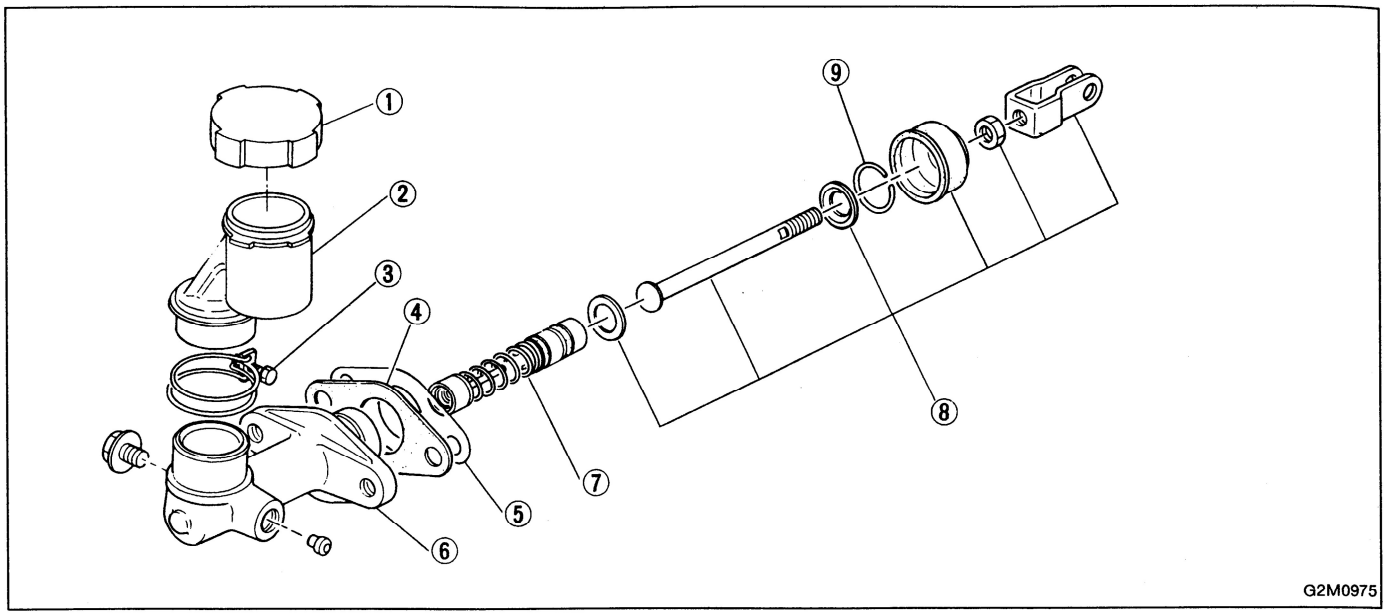

① Reservoir cap
② Reservoir tank
③ Reservoir band
④ Seat
⑤ Gasket
⑥ Master cylinder
⑦ Piston
⑧ Push rod
⑨ Piston stop ring

GETtheMANUALS.org

2. RHD MODEL

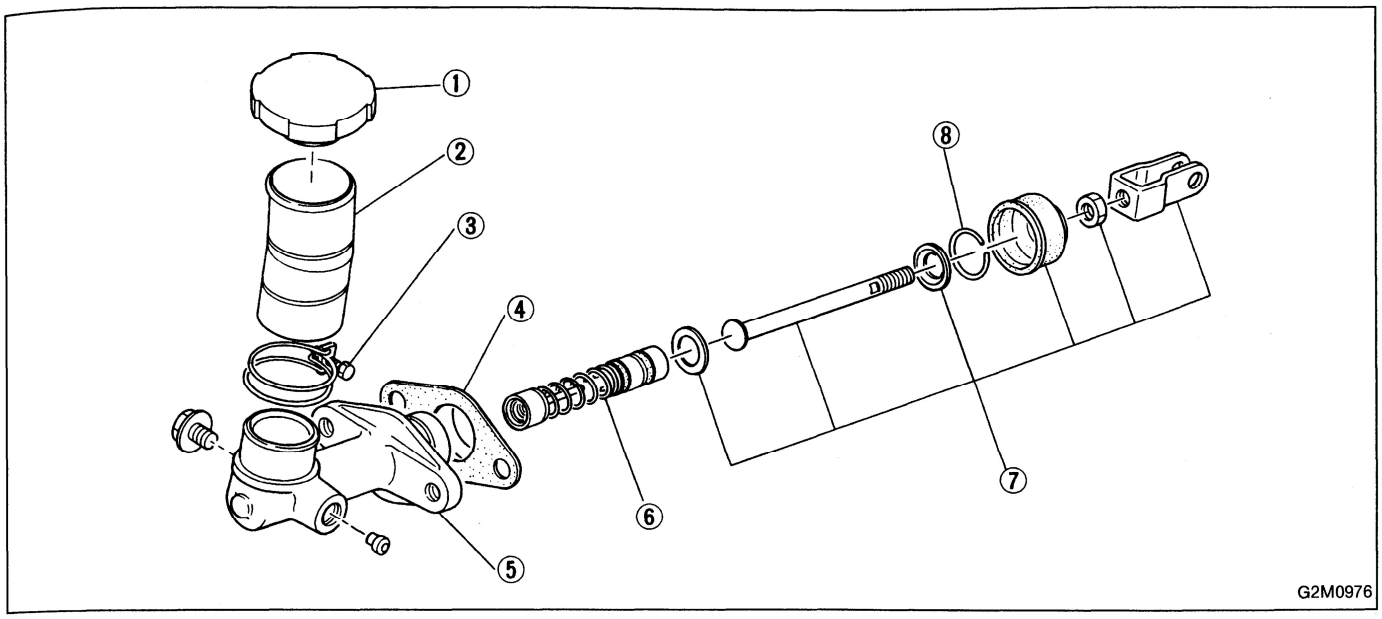

① Reservoir cap
② Reservoir tank
③ Reservoir band
④ Seat
⑤ Master cylinder
⑥ Piston
⑦ Push rod
⑧ Piston stop ring

GETtheMANUALS.org

1. General

A: PRECAUTION

When servicing clutch system, pay attention to the following items.

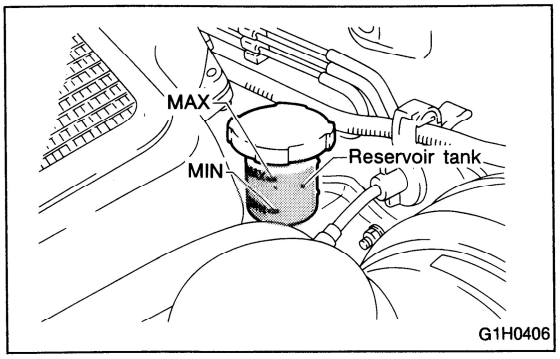

2. HYDRAULIC APPLICATION TYPE

1) Check fluid level using scale on outside of reservoir tank.
2) Make sure that clutch fluid does not leak from master cylinder, operating cylinder and piping.
3) Apply grease sufficiently to the release lever pinion.

2. On-Car Service

2. HYDRAULIC APPLICATION TYPE

Bleed air from oil line with the help of a co-worker.
1) Fit one end of a vinyl tube into the air bleeder of clutch damper and put the other end into a clutch fluid container.

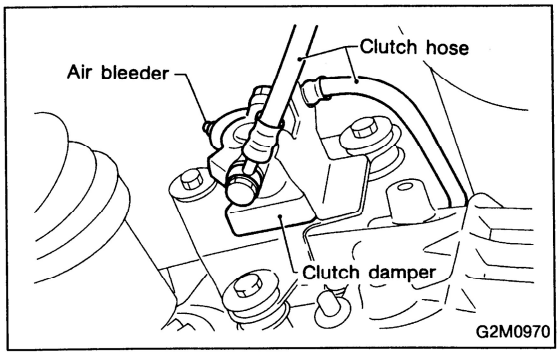

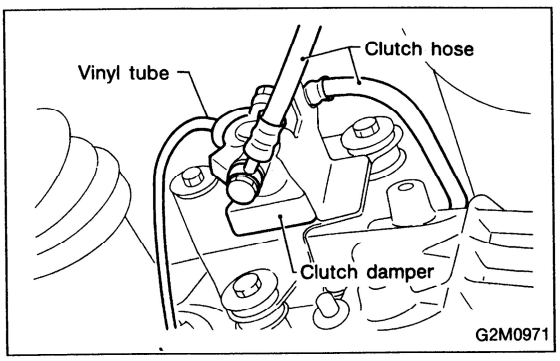

2) Slowly depress the clutch pedal and keep it depressed. Then open the air bleeder to discharge air together with the fluid.
Release the air bleeder for 1 or 2 seconds. Next, with the bleeder closed, slowly release the clutch pedal.

3) Repeat these steps until there are no more air bubbles in the vinyl tube.
CAUTION:
Cover bleeder with waste cloth when loosening it, to prevent clutch fluid from being splashed over surrounding parts.

GETtheMANUALS.org

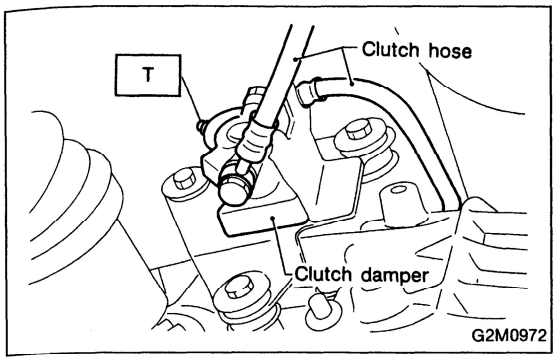

4) Tighten air bleeder.

Tightening torque:
T: 18 ± 3 N·m (1.8 ± 0.3 kg-m, 13.0 ± 2.2 ft-lb)

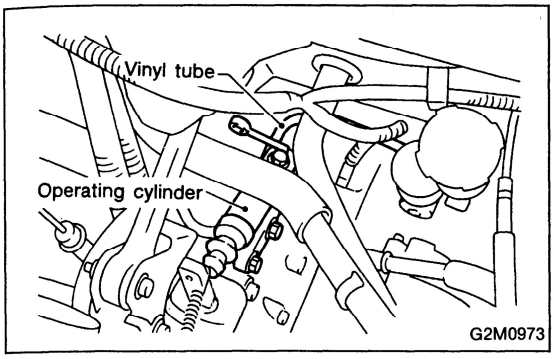

5) Repeat steps 1) through 3) using air bleeder on operating cylinder.

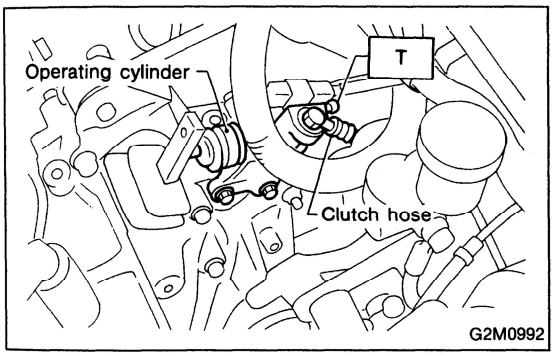

6) Tighten air bleeder.

Tightening torque:
T: 18 ± 3 N·m (1.8 ± 0.3 kg-m, 13.0 ± 2.2 ft-lb)

7) After depressing the clutch pedal, make sure that there are no leaks evident in the entire system.
8) For RHD models, repeat steps 5) through 7) of LHD models.

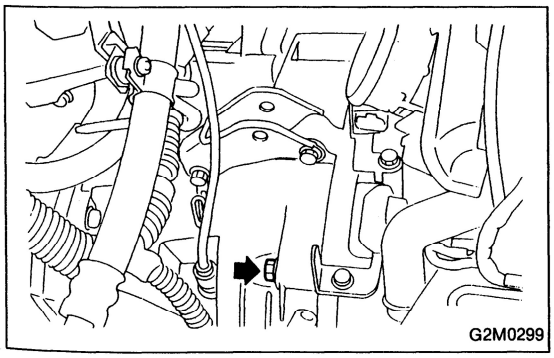

3. Release Bearing and Lever

A: REMOVAL

2. HYDRAULIC APPLICATION TYPE

Remove release bearing and lever after separating engine and transmission. <Ref. to 2-11.>

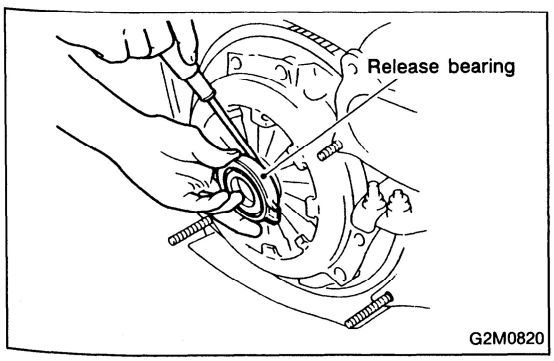

1) Remove release lever from transmission.
2) Put release bearing in engine side.
3) Remove release bearing from clutch cover using flat-type screwdriver.

GETtheMANUALS.org

C: INSTALLATION

Before or during assembling, lubricate the following points with a light coat of grease.
- Inner groove of release bearing
- Contact surface of lever and pivot
- Contact surface of lever and bearing
- Transmission main shaft spline (Use grease containing molybdenum disulphide.)

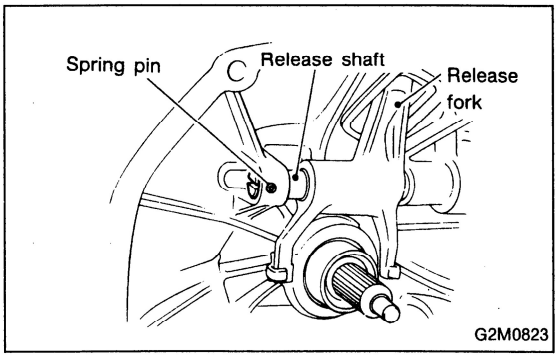

2. HYDRAULIC APPLICATION TYPE

1) Position both release lever and bearing on transmission.
2) Install release lever shaft.

CAUTION:
Be sure to fit groove on release lever shaft into pin located at through-hole.

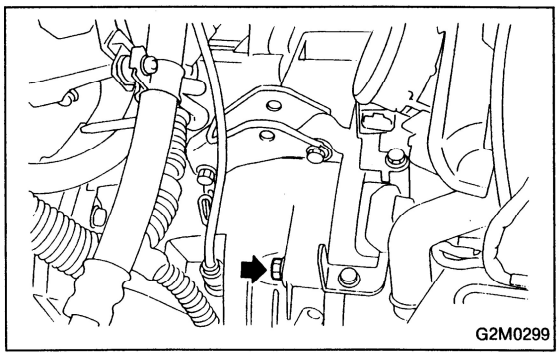

3) With release lever held in that position, connect engine and transmission.

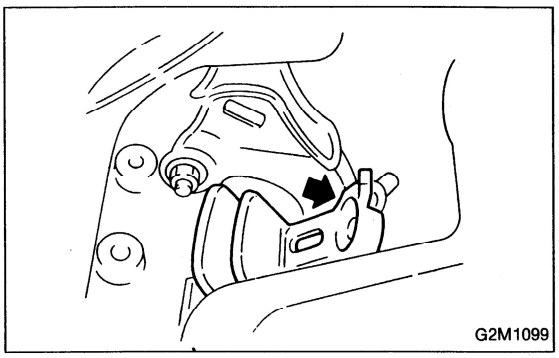

4) Push release lever to fit bearing into clutch cover.

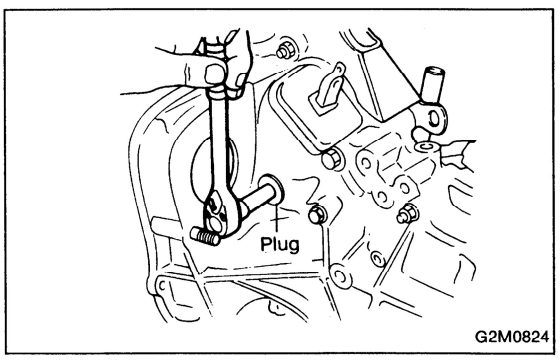

5) Install plug.

Tightening torque:
44 ± 3 N·m (4.5 ± 0.3 kg-m, 32.5 ± 2.2 ft-lb)

GETtheMANUALS.org

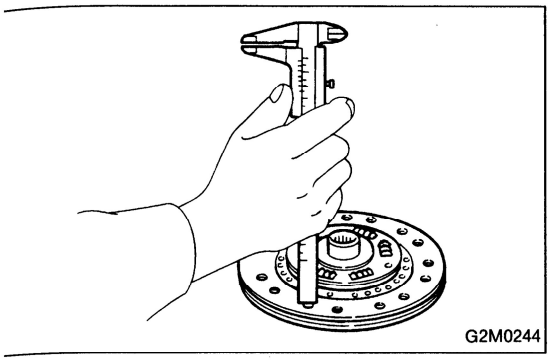
G2M0244

4. Clutch Disc and Cover

B: INSPECTION

1. CLUTCH DISC

1) Facing wear

Measure the depth of rivet head from the surface of facing. Replace if facings are worn locally or worn down to less than the specified value.

Depth of rivet head:

Standard value

1800 cc FWD model: 1.4 mm (0.055 in)

1600 cc FWD model: 1.3 — 1.9 mm (0.051 — 0.075 in)

AWD model: 1.3 — 1.9 mm (0.051 — 0.075 in)

Limit of sinking

0.3 mm (0.012 in)

CAUTION:

Do not wash clutch disc with any cleaning fluid.

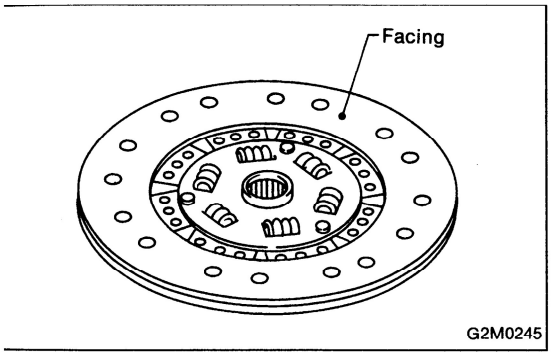

G2M0245

2) Hardened facing

Correct by using emery paper or replace.

3) Oil soakage on facing

Replace clutch disc and inspect transmission front oil seal, transmission case mating surface, engine rear oil seal and other points for oil leakage.

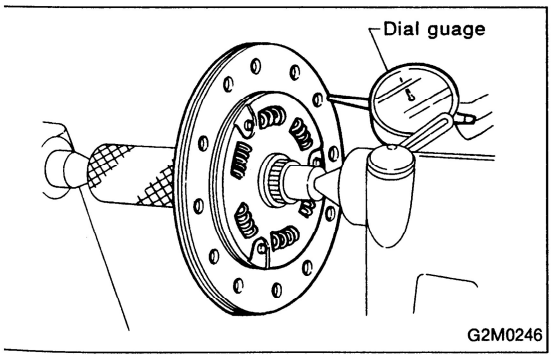

G2M0246

4) Deflection on facing

If deflection exceeds the specified value at the outer circumference of facing, repair or replace.

Limit for deflection:

1800 cc FWD model:

1.0 mm (0.039 in) at R = 95 mm (3.74 in)

1600 cc FWD model:

1.0 mm (0.039 in) at R = 90 mm (3.54 in)

1600 cc AWD model:

1.0 mm (0.039 in) at R = 102 mm (4.02 in)

1800 cc AWD and 2000 cc TURBO model:

1.0 mm (0.039 in) at R = 107 mm (4.21 in)

GETtheMANUALS.org

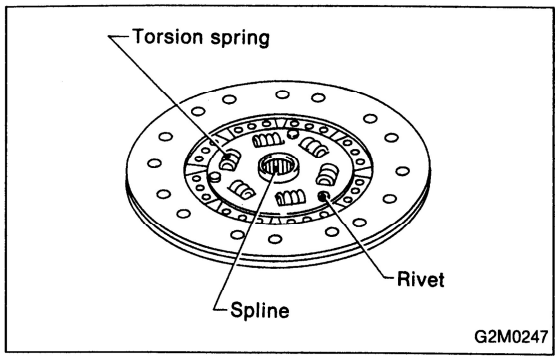

5) Worn spline, loose rivets and torsion spring failure
Replace defective parts.

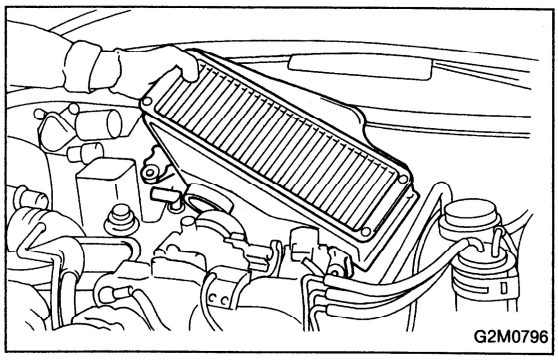

5. Operating Cylinder

A: REMOVAL AND INSTALLATION

1) Remove intercooler.

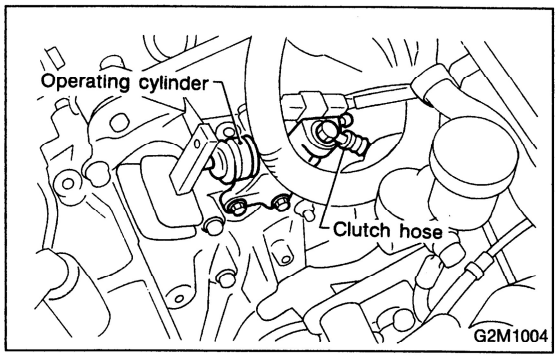

2) Remove clutch hose from operating cylinder.

CAUTION:
Cover hose joint to prevent clutch fluid from flowing out.

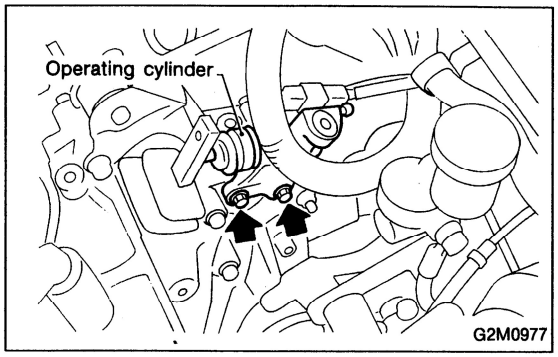

3) Remove operating cylinder from transmission.

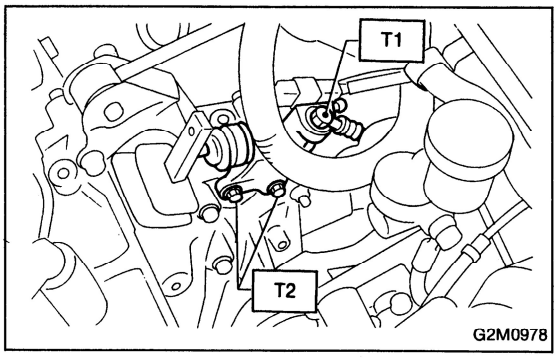

4) Installation is in the reverse order of removal.

Tightening torque:
T1: 18 ± 3 N·m (1.8 ± 0.3 kg-m, 13.0 ± 2.2 ft-lb)
T2: 37 ± 3 N·m (3.8 ± 0.3 kg-m, 27.5 ± 2.2 ft-lb)

GETtheMANUALS.org

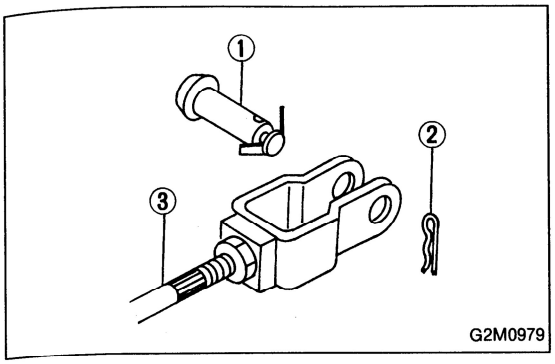

6. Master Cylinder and Reservoir Tank (LHD Model)

A: REMOVAL

1) Remove snap pin ②, clevis pin ① and separate push rod ③ of master cylinder from clutch pedal.

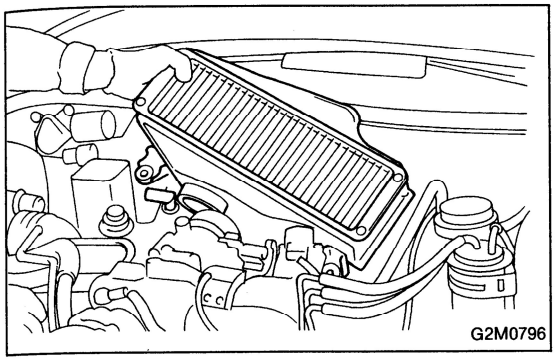

2) Remove intercooler. <Ref. to 2-7b [W2A0].>

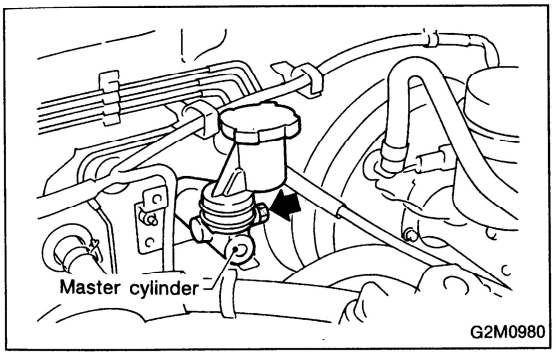

3) Remove clutch hose from master cylinder.
CAUTION:
Plug up hose connection to prevent clutch fluid from spilling out.

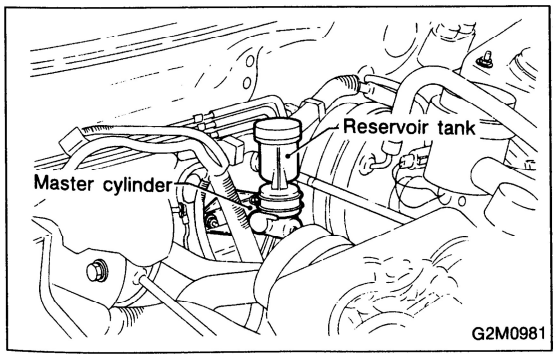

4) Remove master cylinder with reservoir tank.

GETtheMANUALS.org

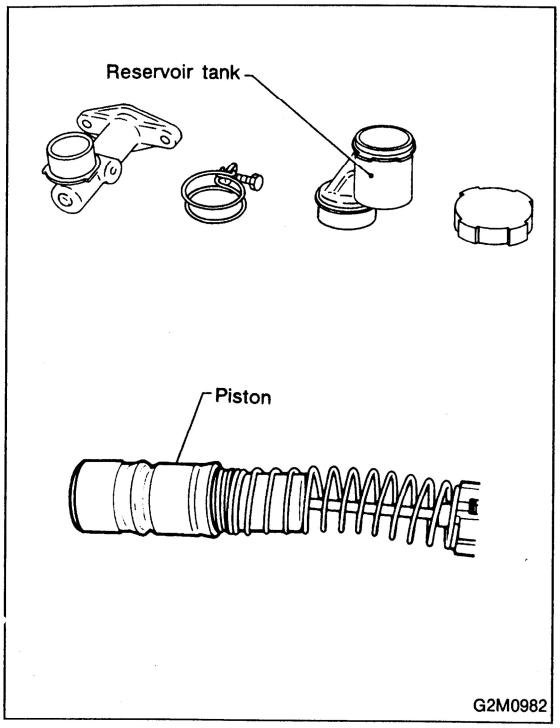

B: INSPECTION

If any damage, deformation, wear, swelling, rust or other faults are found on the cylinder, piston, push rod, fluid reservoir, seat and gasket, replace the faulty part.

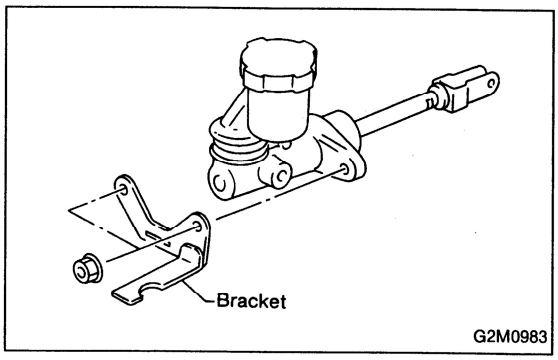

C: INSTALLATION

1) Install master cylinder to body.

CAUTION:
Always use a new gasket.

Tightening torque:
18 ± 3 N·m (1.8 ± 0.3 kg-m, 13.0 ± 2.2 ft-lb)

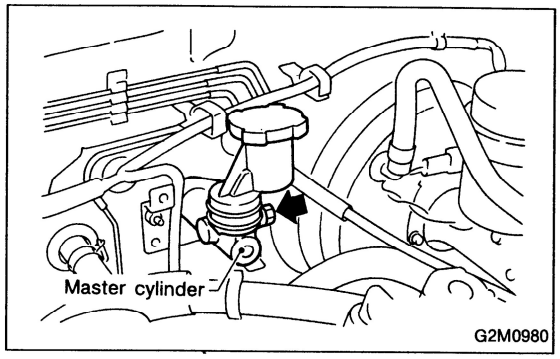

2) Install clutch hose to master cylinder.

CAUTION:
Check that hose is routed properly.

Tightening torque:
18 ± 3 N·m (1.8 ± 0.3 kg-m, 13.0 ± 2.2 ft-lb)

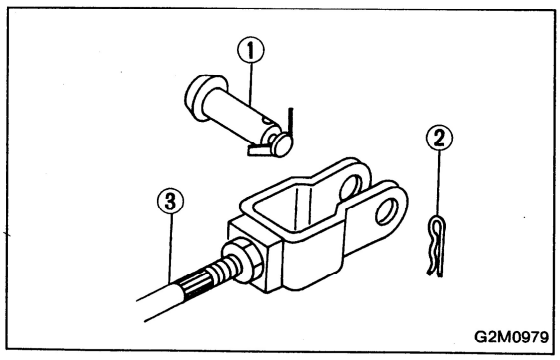

3) Connect push rod ③ of master cylinder to clutch pedal, and install clevis pin ② and snap pin ①.

GETtheMANUALS.org

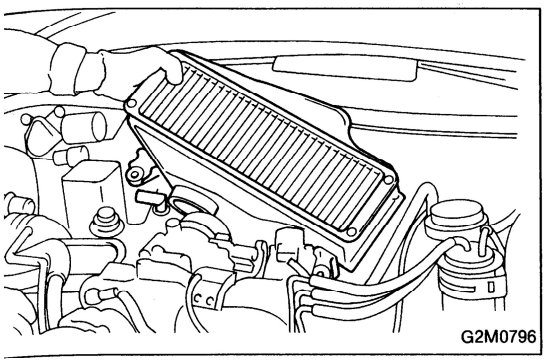
G2M0796

4) Install intercooler. <Ref. to 2-7b [W2A0].>

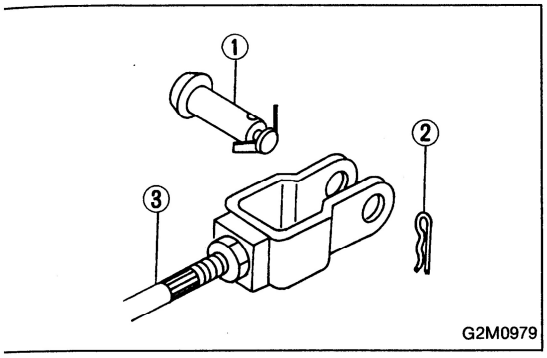

G2M0979

7. Master Cylinder and Reservoir Tank (RHD Model)

A: REMOVAL

1) Remove snap pin ②, clevis pin ① and separate push rod ③ of master cylinder from clutch pedal.

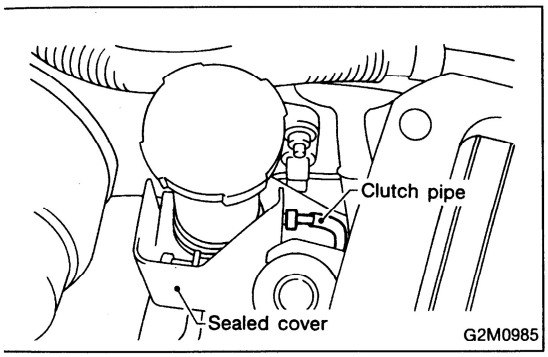

G2M0985

2) Remove clutch pipe from master cylinder.

CAUTION:
Plug up hose connection to prevent clutch fluid from spilling out.

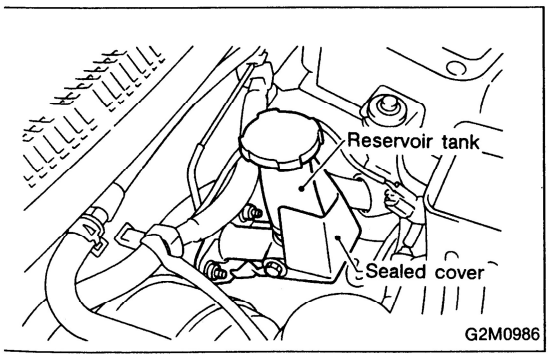

G2M0986

3) Remove master cylinder with reservoir tank.

GETtheMANUALS.org

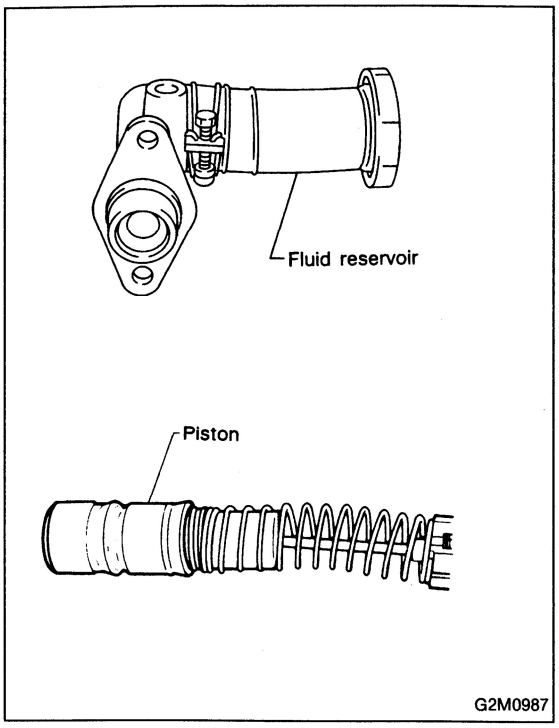

B: INSPECTION

If any damage, deformation, wear, swelling, rust or other faults are found on the cylinder, piston, push rod, fluid reservoir, seat and gasket, replace the faulty part.

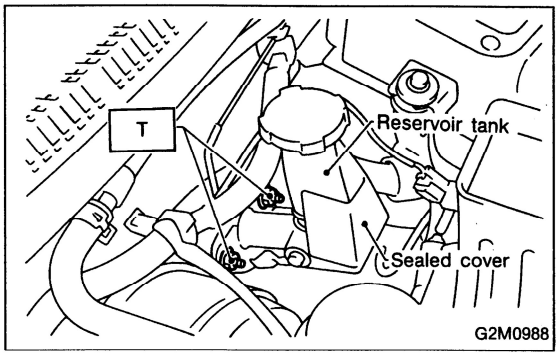

C: INSTALLATION

1) Install master cylinder to body.

CAUTION:
Always use a new gasket.

Tightening torque:
T: 18 ± 3 N·m (1.8 ± 0.3 kg-m, 13.0 ± 2.2 ft-lb)

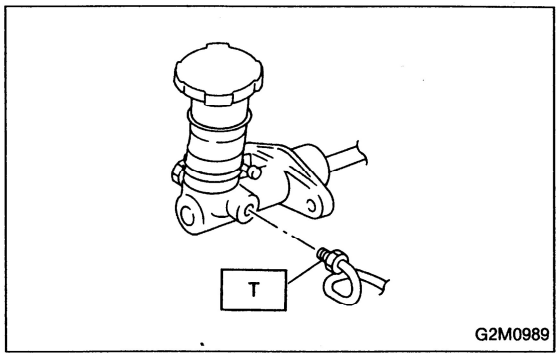

2) Install clutch hose to master cylinder.

CAUTION:
Check that hose is routed properly.

Tightening torque:
T: 18 ± 3 N·m (1.8 ± 0.3 kg-m, 13.0 ± 2.2 ft-lb)

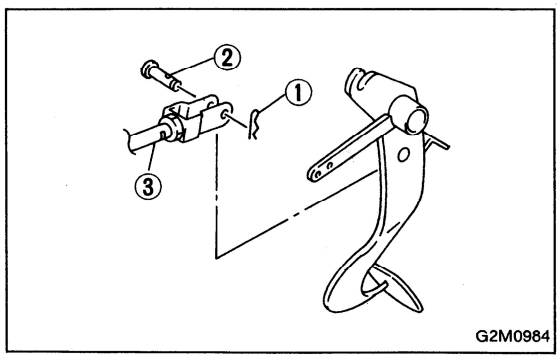

3) Connect push rod ③ of master cylinder to clutch pedal, and install clevis pin ② and snap pin ①.

GETtheMANUALS.org

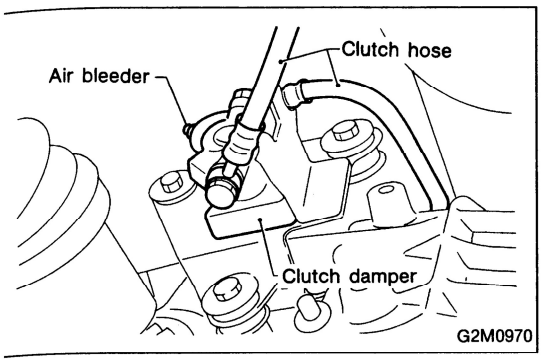

8. Clutch Damper (LHD Model)

A: REMOVAL AND INSTALLATION

1) Remove clutch hoses from clutch damper.

CAUTION:
Cover hose joint to prevent clutch fluid from flowing out.

2) Remove clutch damper with bracket.

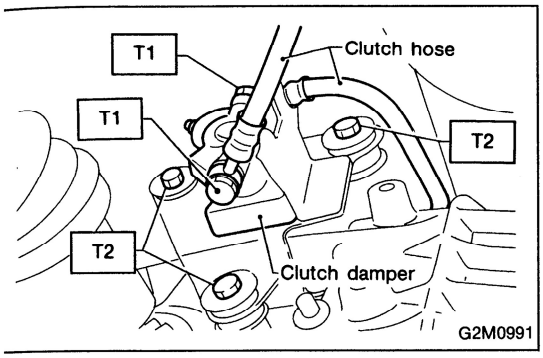

3) Installation is in the reverse order of removal.

Tightening torque:
T1: 18 ± 3 N·m (1.8 ± 0.3 kg-m, 13.0 ± 2.2 ft-lb)
T2: 37 ± 3 N·m (3.8 ± 0.3 kg-m, 27.5 ± 2.2 ft-lb)

GETtheMANUALS.org

ENGINE AND TRANSMISSION MOUNTING SYSTEM 2-11

Page

C COMPONENT PARTS 2
1. Engine Mounting 2
2. Transmission Mounting 3

W SERVICE PROCEDURE 4
1. General Precaution 4
2. Engine 5
3. Transmission 29

- The descriptions in this section apply to the turbo model.

GETtheMANUALS.org

1. Engine Mounting

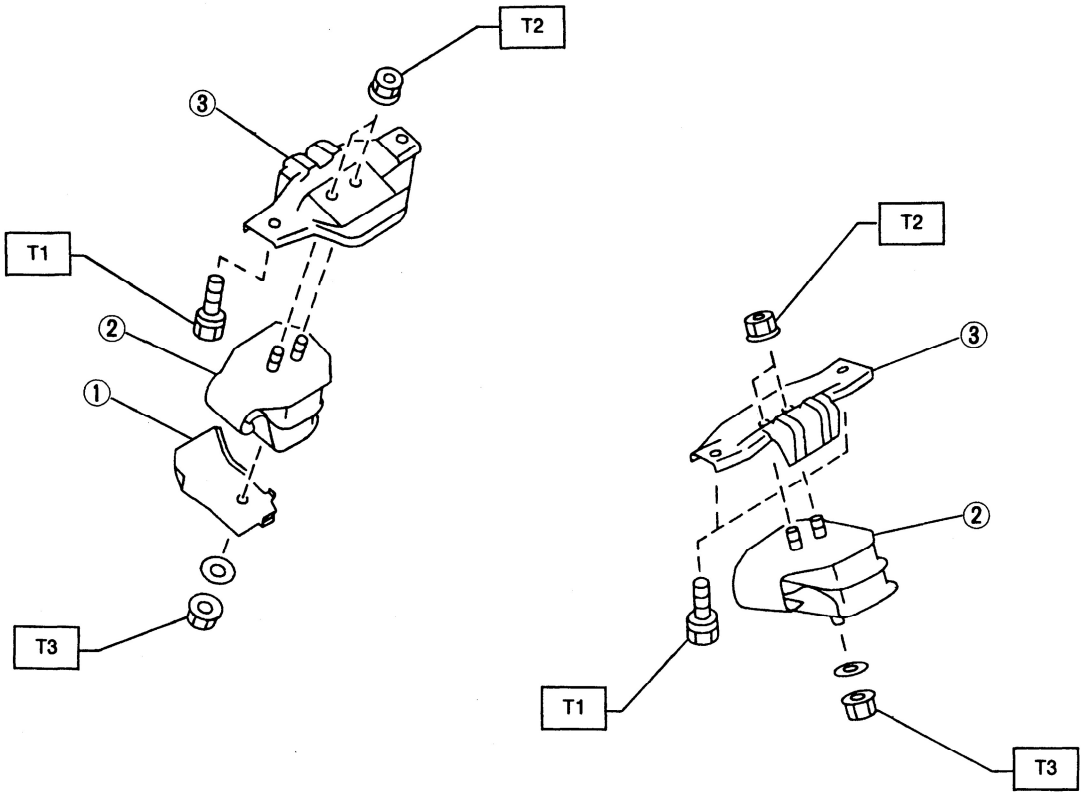

G2M0787

① Heat shield cover
② Front cushion rubber
③ Front engine mounting bracket

Tightening torque: N·m (kg-m, ft-lb)
T1: 20 — 33 (2.0 — 3.4, 14 — 25)
T2: 31 — 51 (3.2 — 5.2, 23 — 38)
T3: 54 — 83 (5.5 — 8.5, 40 — 61)

GETtheMANUALS.org

2. Transmission Mounting

3. TURBO MODEL

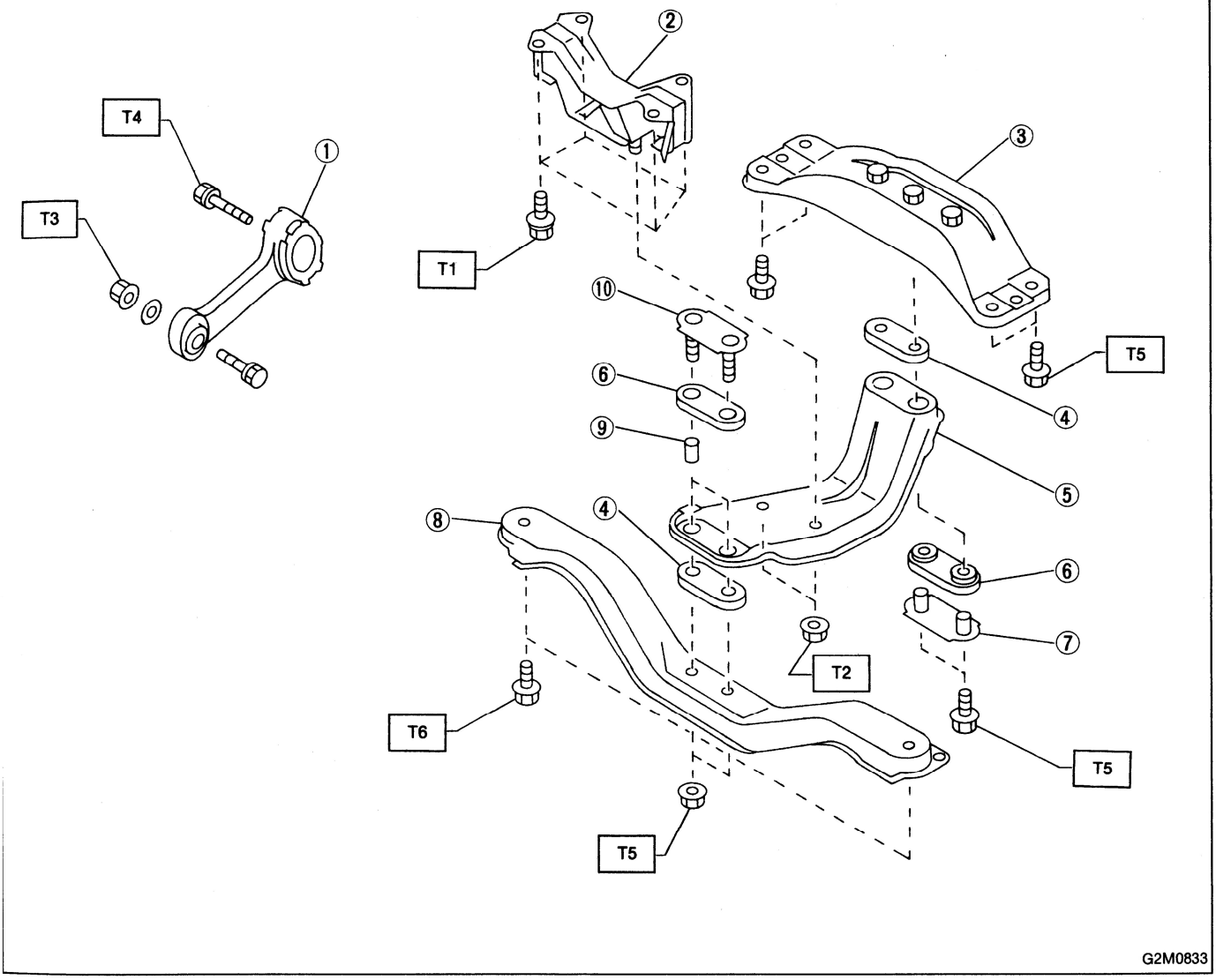

G2M0833

① Pitching stopper
② Rear cushion rubber (AWD)
③ Rear crossmember
④ Cushion D
⑤ Center crossmember
⑥ Cushion C
⑦ Rear plate
⑧ Front crossmember
⑨ Spacer
⑩ Front plate

Tightening torque: N·m (kg-m, ft-lb)
T1: 28 — 38 (2.9 — 3.9, 21 — 28)
T2: 27 — 47 (2.8 — 4.8, 20 — 35)
T3: 44 — 54 (4.5 — 5.5, 33 — 40)
T4: 47 — 67 (4.8 — 6.8, 35 — 49)
T5: 54 — 83 (5.5 — 8.5, 40 — 61)
T6: 118 — 157 (12 — 16, 87 — 116)

GETtheMANUALS.org

1. General Precaution

1) Remove or install engine and transmission in an area where chain hoists, lifting devices, etc. are available for ready use.
2) Be sure not to damage coated surfaces of body panels with tools or stain seats and windows with coolant or oil. Place a cover over fenders, as required, for protection.
3) Prior to starting work, prepare the following:
Service tools, clean cloth, containers to catch coolant and oil, wire ropes, chain hoist, transmission jacks, etc.
4) Lift up or lower the vehicle when necessary. Make sure to support the correct positions. (Refer to Chapter 1-3 "General Information".)

GETtheMANUALS.org

2. Engine

A: REMOVAL

1. Set the vehicle on lift arms.
2. Open front hood and support with a stay.

↓

3. Release fuel pressure.
4. Remove battery from vehicle.
5 Remove window washer tank.
6. Drain coolant.

↓

7. Remove cooling system.

↓

With A/C

8. Collect refrigerant, and remove pressure hose.

↓

9. Remove air intake system.

↓

10. Remove canister and bracket.

↓

11. Disconnect connectors, cables and hoses.

↓

12. Remove starter.

↓

13. Remove power steering pump from bracket.

↓

14. Remove center exhaust pipe.

↓

15. Remove nuts which hold lower side of transmission to engine.
16. Remove nuts which install front cushion rubber onto front crossmember.

↓

17. Separate clutch release fork from release bearing.

↓

18. Remove pitching stopper.

↓

19. Disconnect fuel delivery hose, return hose and evaporation hose.
20. Remove fuel filter and bracket.

↓

21. Support engine with a lifting device and wire ropes.
22. Support transmission with a garage jack.

↓

23. Remove bolts which hold upper side of transmission to engine.

↓

24. Remove engine from vehicle.

GETtheMANUALS.org

1) Set the vehicle on lift arms.
2) Open front hood fully and support with stay.

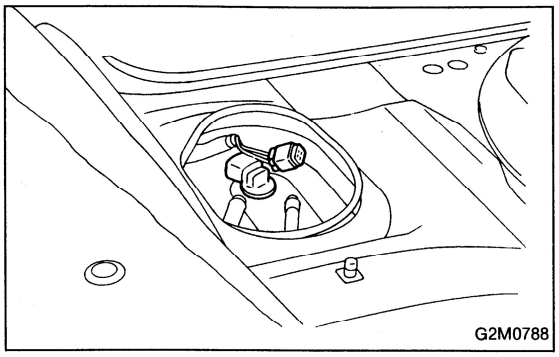

3) Release fuel pressure.
   (1) Disconnect connector from fuel pump.
   (2) Start the engine, and run until it stalls.
   (3) After the engine stalls, crank it for five seconds more.
   (4) Turn ignition switch to "OFF".

<Ref. to 2-8 [W101].>

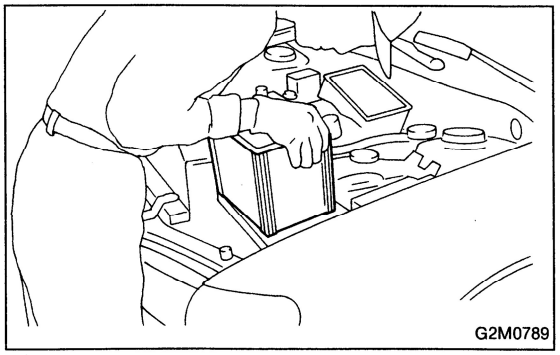

4) Remove battery from vehicle.

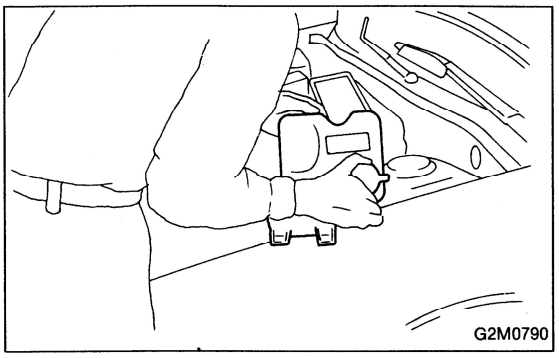

5) Remove window washer tank.

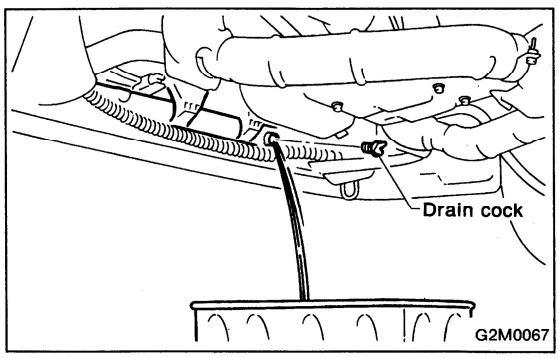

6) Drain coolant.
Set container under the vehicle, and remove drain cock from radiator.

GETtheMANUALS.org

7) Remove cooling system.

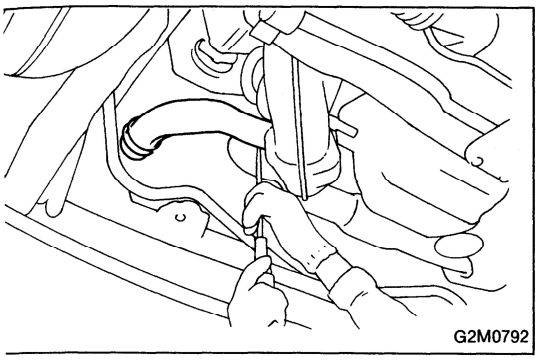

(1) Disconnect radiator fan motor connector.
(2) Disconnect radiator outlet hose from thermostat cover.

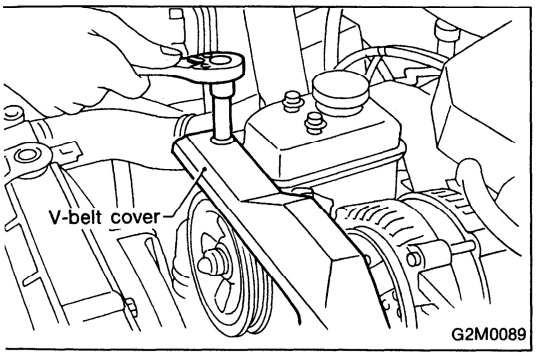

(3) Remove V-belt cover.

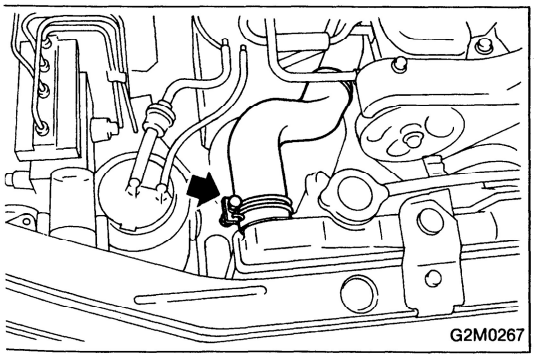

(4) Disconnect radiator inlet hose from radiator.

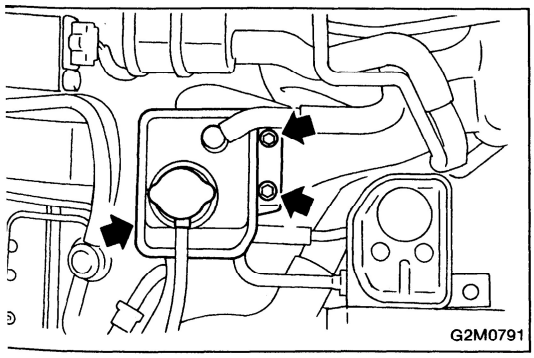

(5) Remove coolant filler tank.

GETtheMANUALS.org

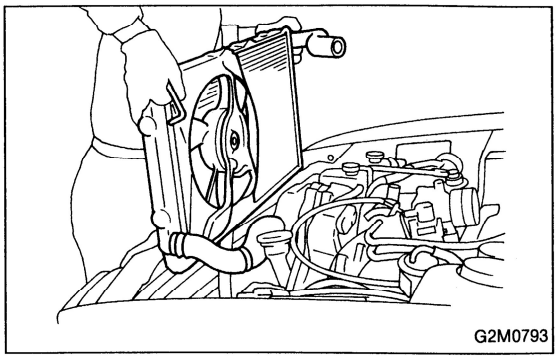
G2M0793

(6) Remove radiator upper bracket, and remove radiator assembly from vehicle.

8) Collect refrigerant, and remove pressure hoses. (With A/C)
(1) Place and connect the attachment hose to the refrigerant recycle system.
(2) Collect refrigerant from A/C system.

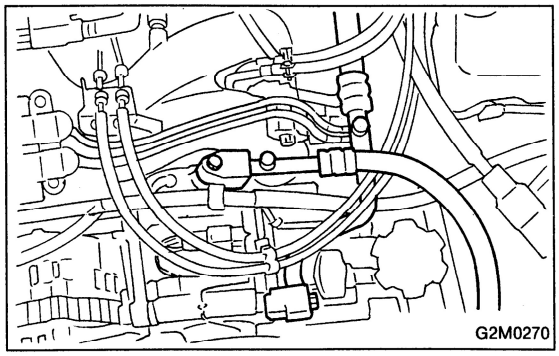
G2M0270

(3) Disconnect A/C pressure hoses from A/C compressor.

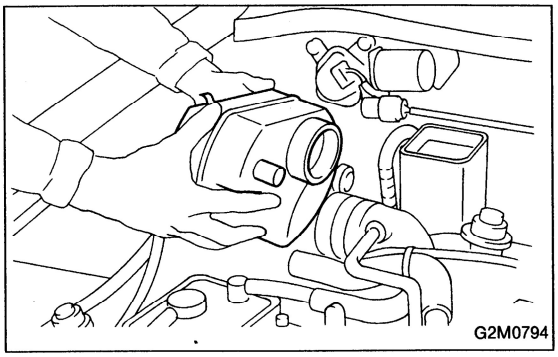
G2M0794

9) Remove air intake system.
(1) Remove resonator chamber.

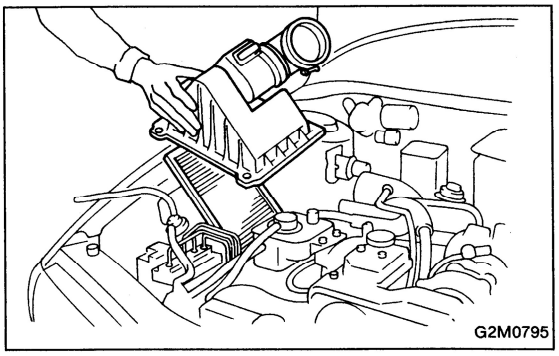
G2M0795

(2) Disconnect connector from mass air flow sensor.
(3) Remove air cleaner upper cover and air cleaner element.

GETtheMANUALS.org

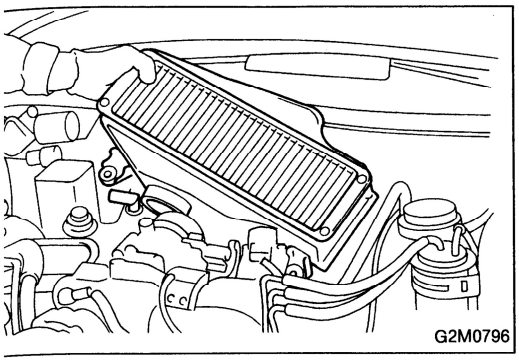
G2M0796

(4) Remove intercooler.

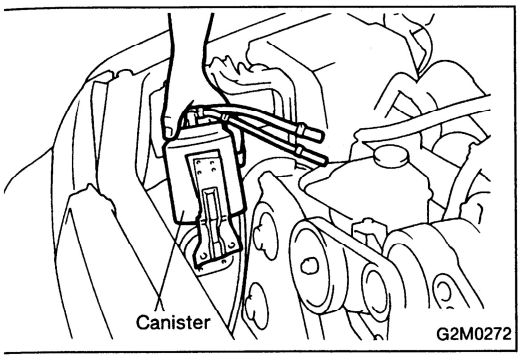

G2M0272

10) Remove canister and bracket.

11) Disconnect connectors, cables and hoses.
(1) Disconnect the following connectors.
① Engine harness connectors
② Engine ground terminal
③ Battery ground harness
④ Alternator connector and terminal
⑤ A/C compressor connectors (With A/C)

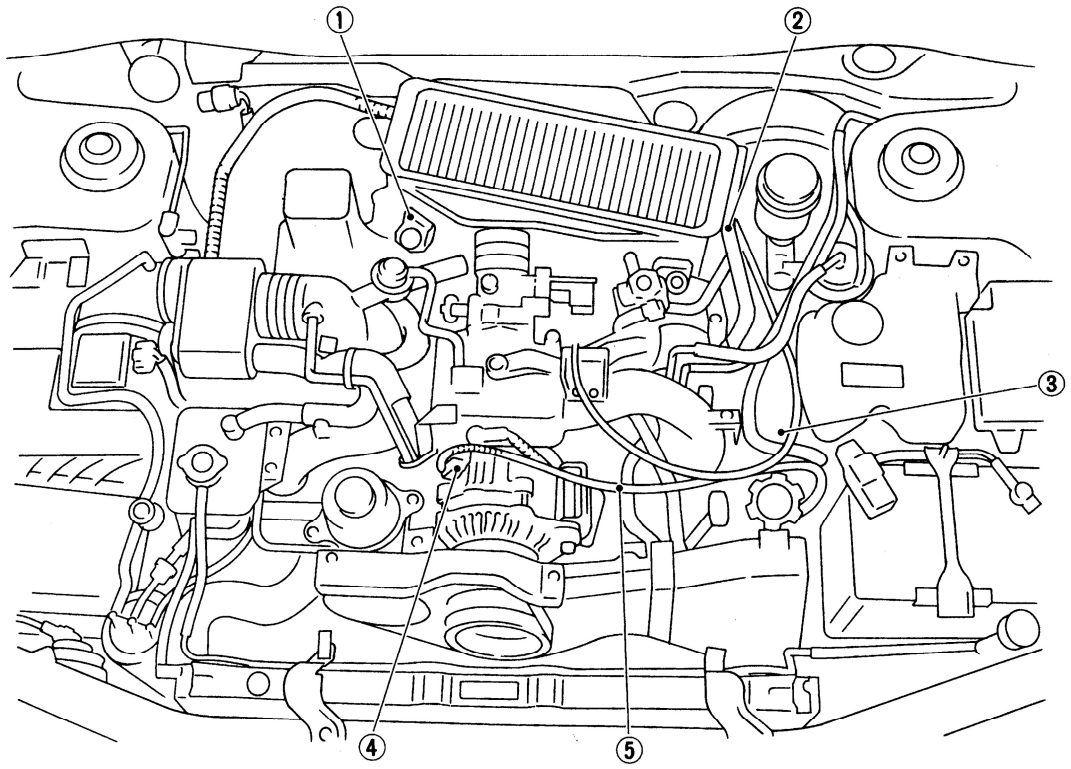

G2M0797

GETtheMANUALS.org

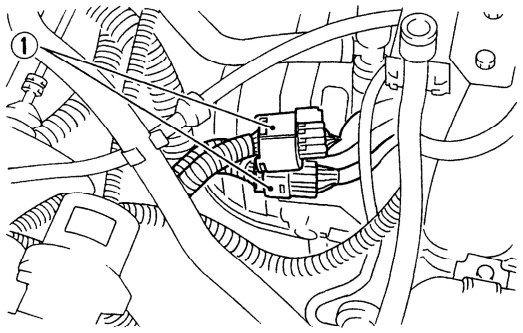

G2M0798

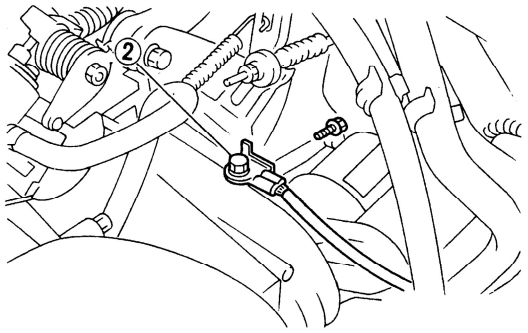

G2M0799

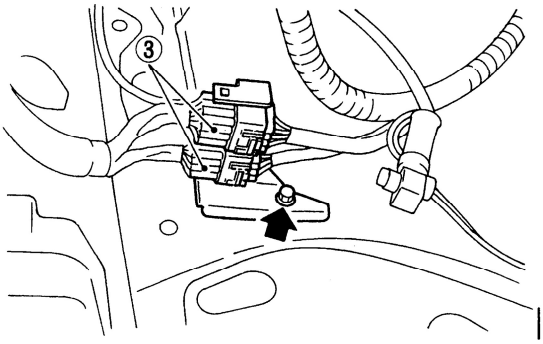

G2M0800

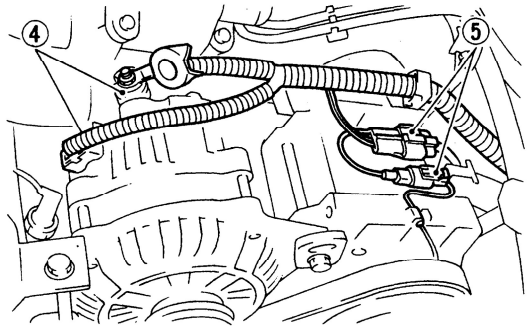

G2M0801

CAUTION:
When disconnecting battery ground harness ③, remove bracket.

GETtheMANUALS.org

(2) Disconnect the following cables.
① Accelerator cable
② Clutch release spring

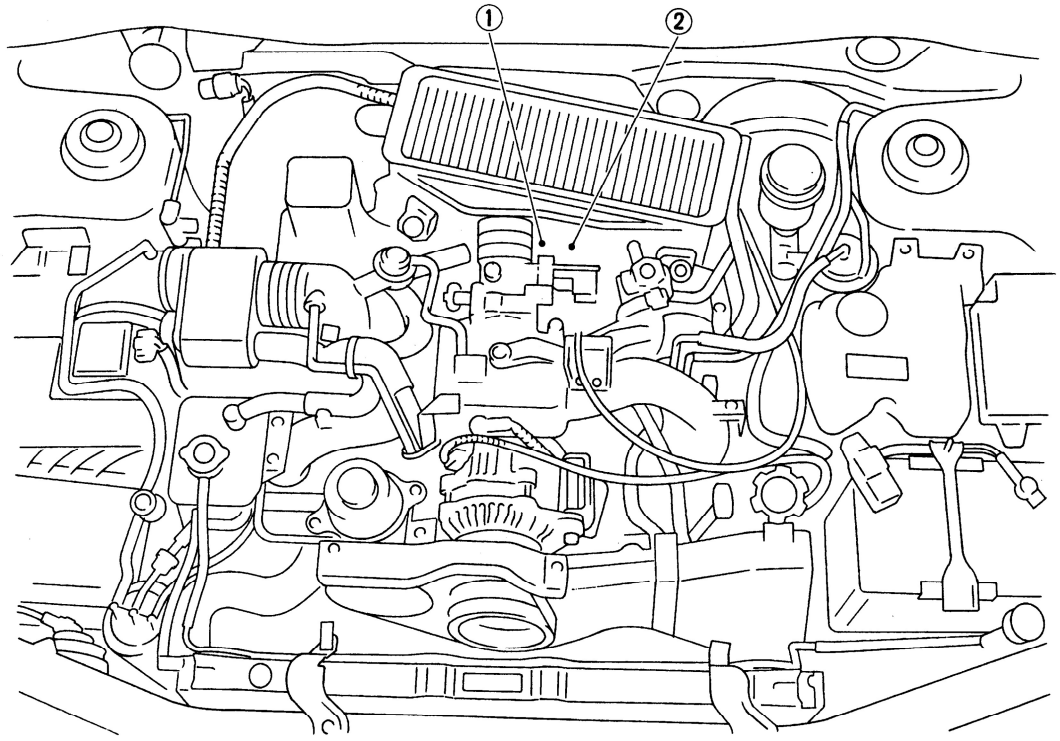

G2M0802

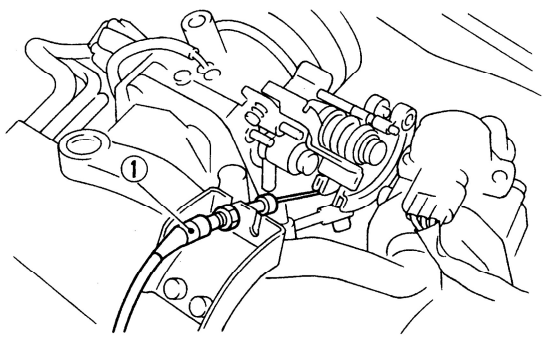

G2M0803

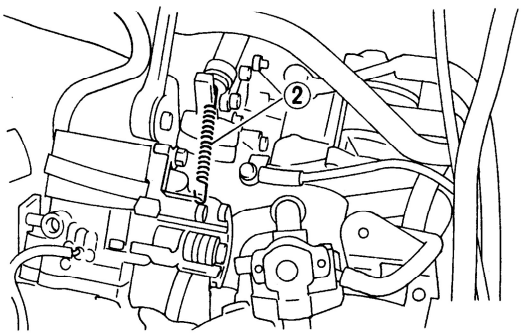

G2M0804

GETtheMANUALS.org

(3) Disconnect the following hoses.
① Brake booster vacuum hose
② Heater inlet and outlet hoses

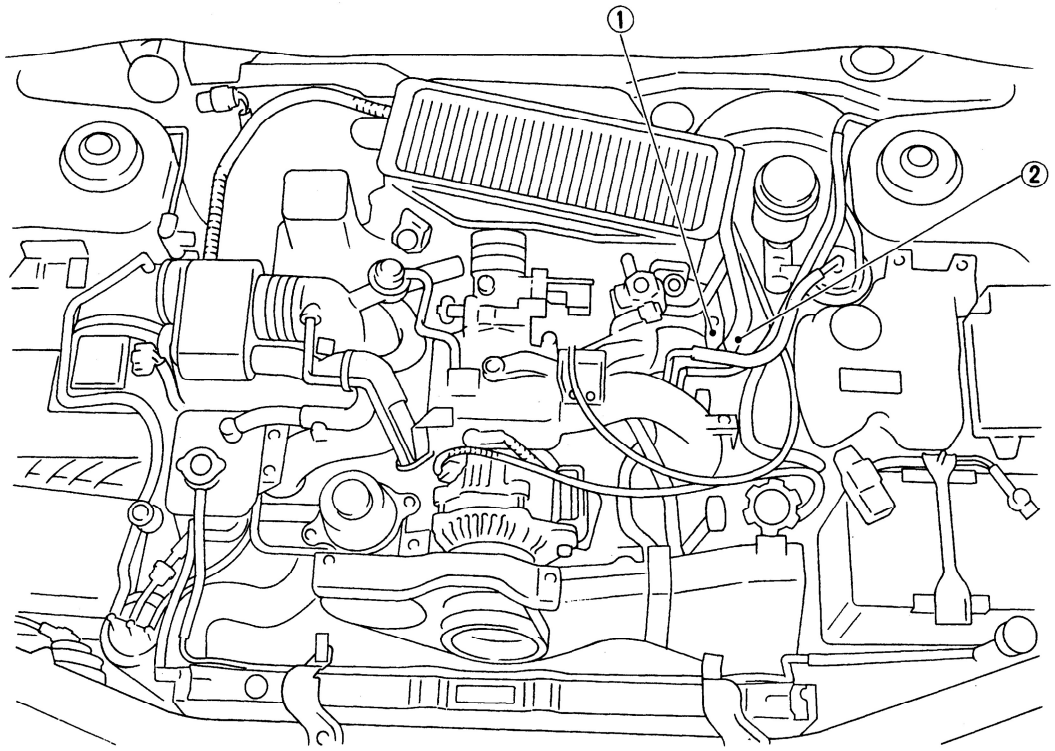

G2M0805

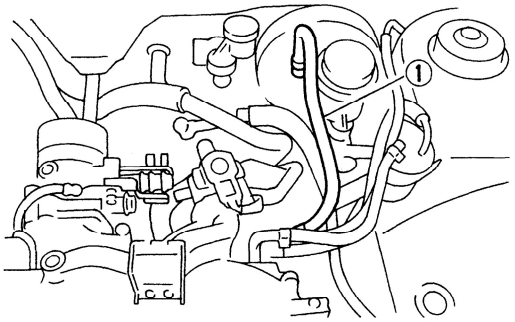

G2M0806

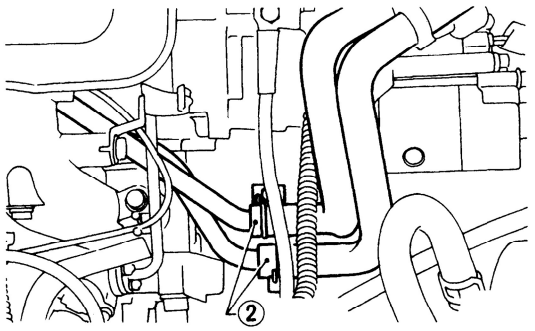

G2M0808

GETtheMANUALS.org

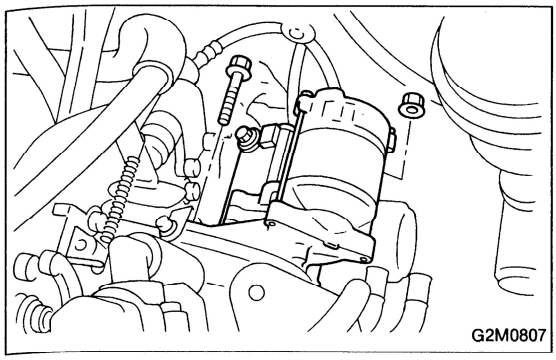

12) Remove starter.

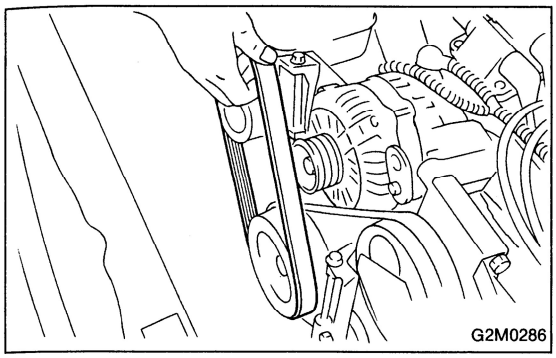

13) Remove power steering pump from bracket.
(1) Loosen lock bolt and slider bolt, and remove front side V-belt.

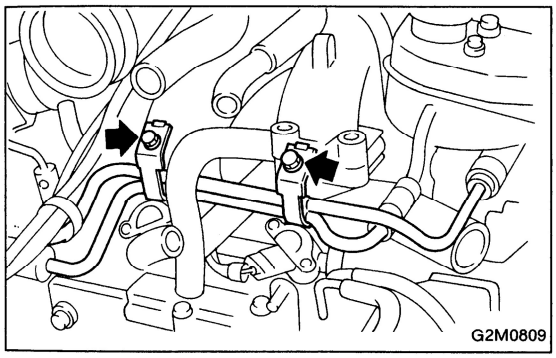

(2) Remove pipe with bracket from intake manifold.

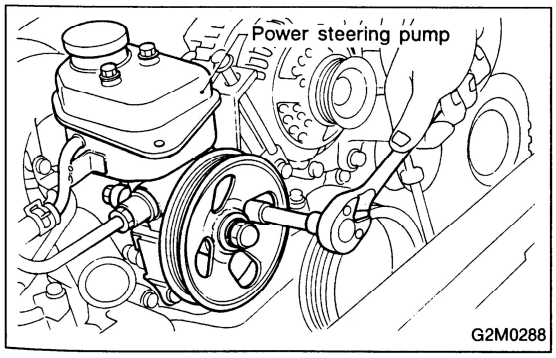

(3) Remove bolts which install power steering pump from bracket.

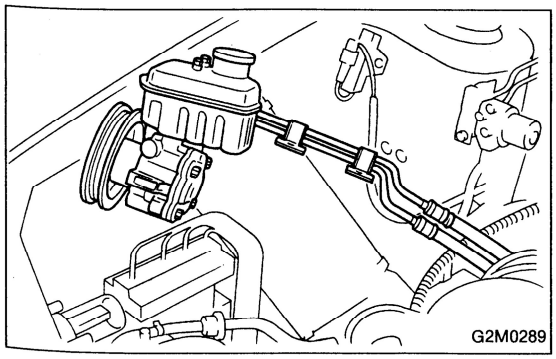

(4) Place power steering pump on the right side wheel apron.

GETtheMANUALS.org

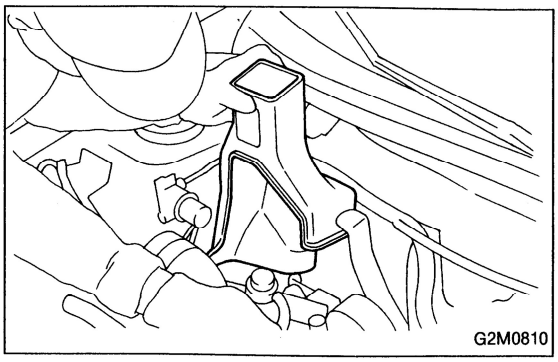

14) Remove center exhaust pipe.
(1) Remove turbocharger cooling duct.

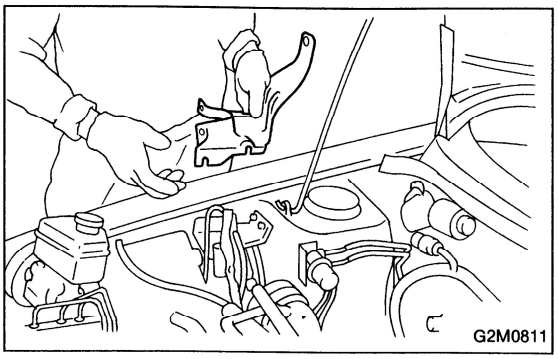

(2) Remove turbocharger lower cover.

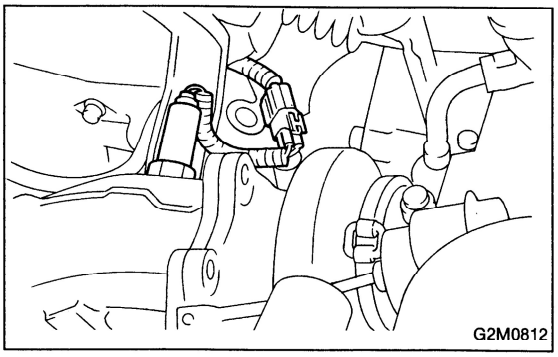

(3) Disconnect connector from oxygen sensor.

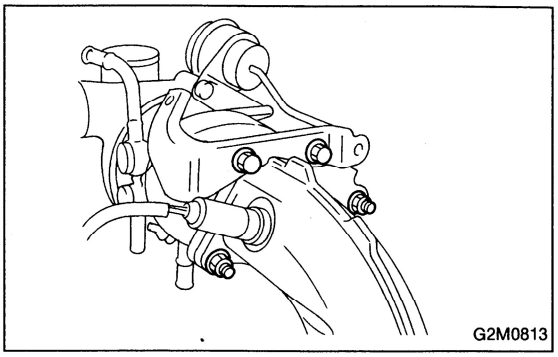

(4) Remove nuts and bolts which install center exhaust pipe to turbocharger.

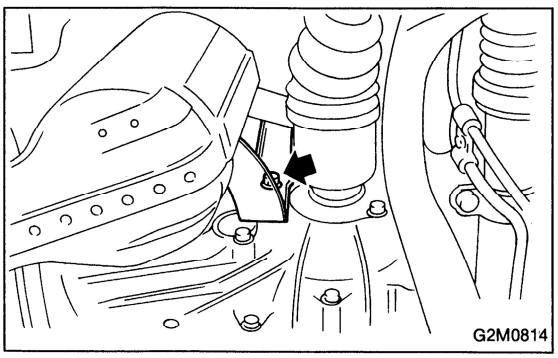

(5) Lift up the vehicle.
(6) Remove intercooler bracket.

GETtheMANUALS.org

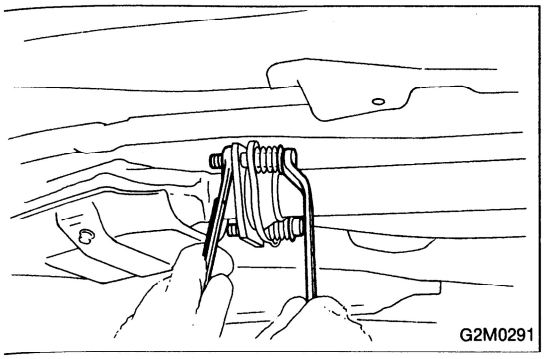

(7) Separate center exhaust pipe from rear exhaust pipe.

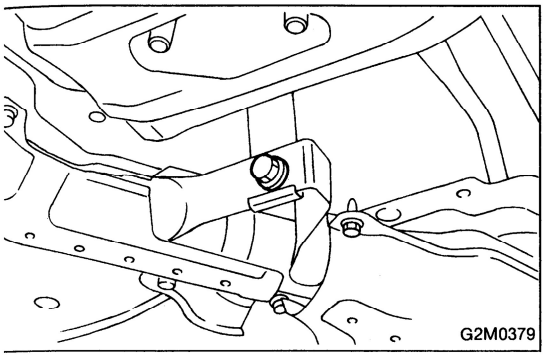

(8) Remove bolt which installs center exhaust pipe on hunger bracket.

CAUTION:
Exhaust pipe will drop when all bolts are removed. So, hold it when removing the last bolt.

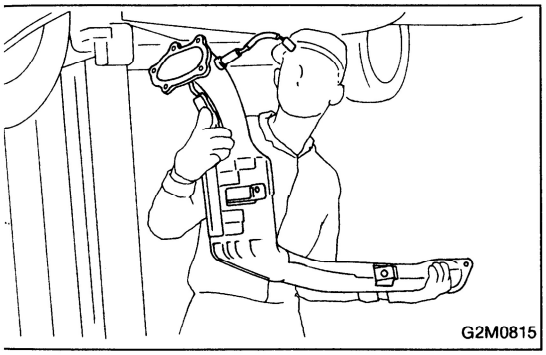

(9) Remove center exhaust pipe.

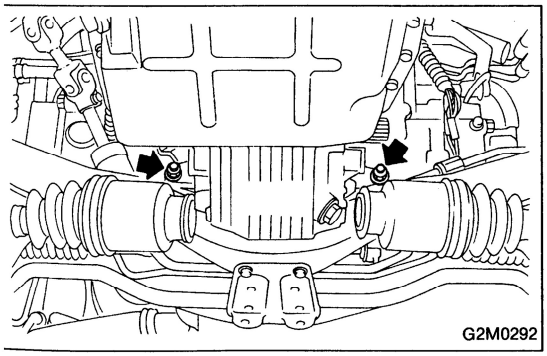

15) Remove nuts which hold lower side of transmission to engine.

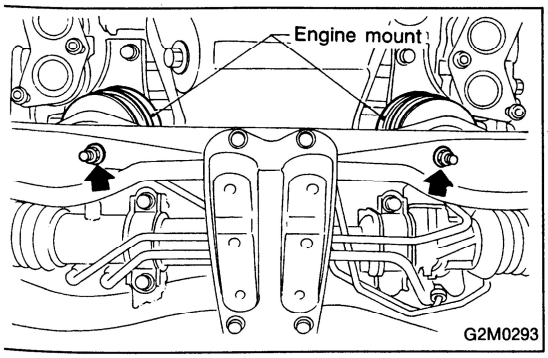

16) Remove nuts which install front cushion rubber onto front crossmember.

GETtheMANUALS.org

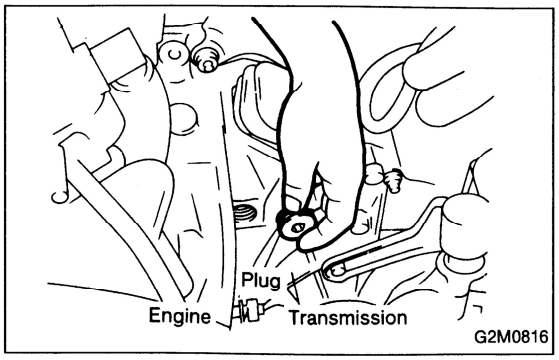

17) Separate clutch release fork from release bearing.
(1) Remove clutch operating cylinder from transmission.
(2) Remove plug using 10 mm hexagon wrench.

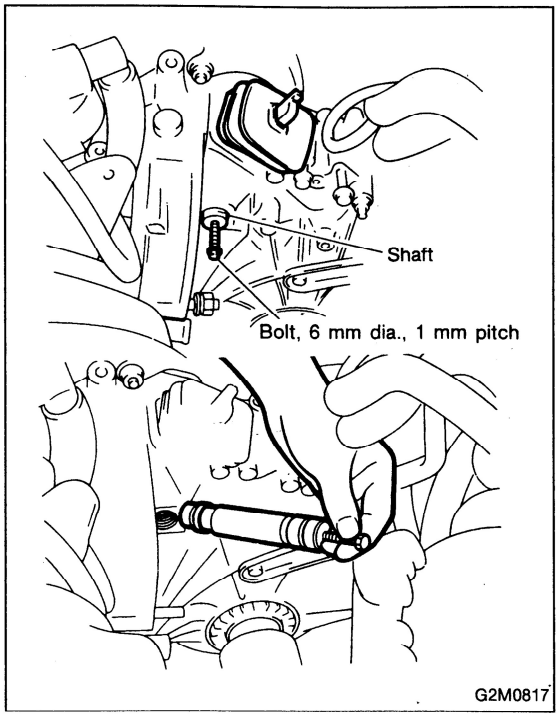

(3) Screw 6 mm dia. bolt into release fork shaft, and remove it.
(4) Raise release fork and unfasten release bearing tabs to free release fork.

CAUTION:
Step (4) is required to prevent interference with engine when removing engine from transmission.

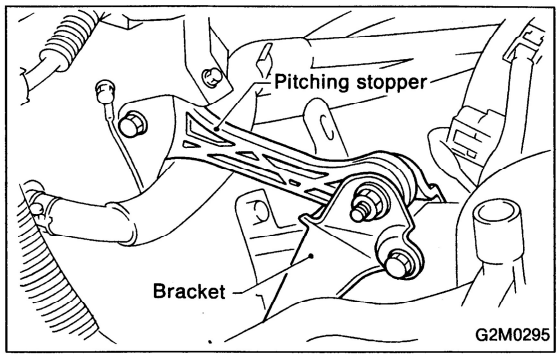

18) Remove pitching stopper.

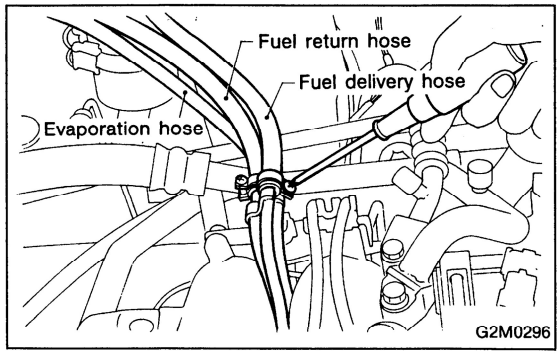

19) Disconnect fuel delivery hose, return hose and evaporation hose.

CAUTION:
Catch fuel from hose into container.

GETtheMANUALS.org

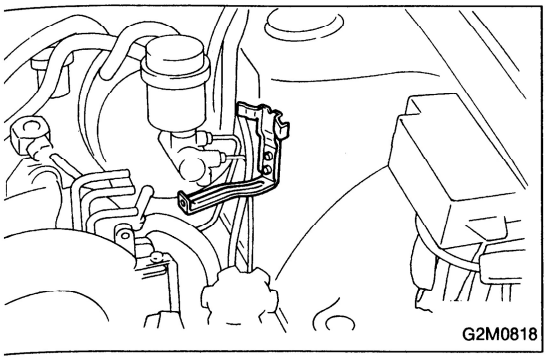

20) Remove fuel filter and bracket.

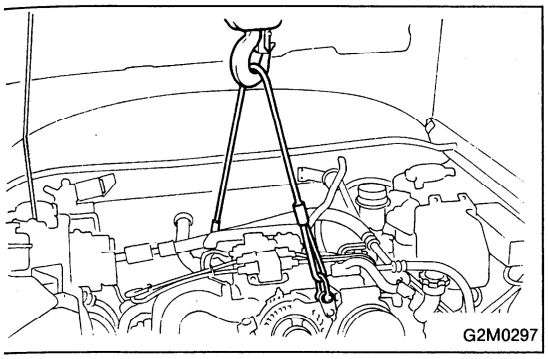

21) Support engine with a lifting device and wire ropes.

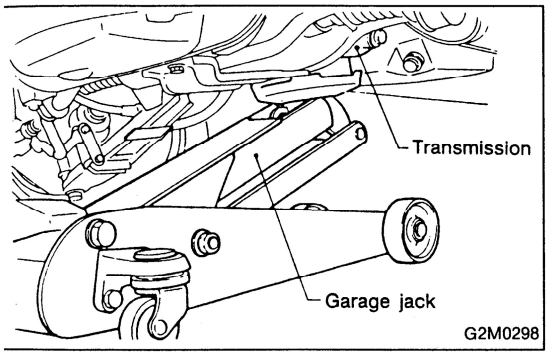

22) Support transmission with a garage jack.
CAUTION:
Before moving engine away from transmission, check to be sure no work has been overlooked. Doing this is very important in order to facilitate re-installation and because transmission lowers under its own weight.

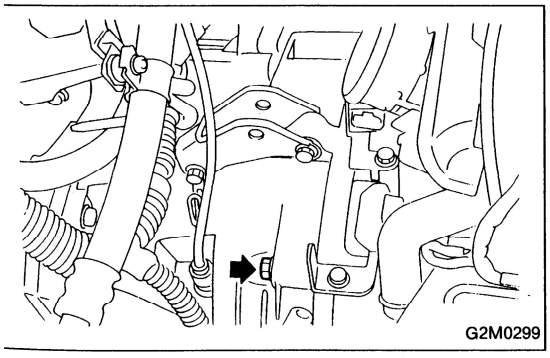

23) Remove bolt which holds right upper side of transmission to engine.

GETtheMANUALS.org

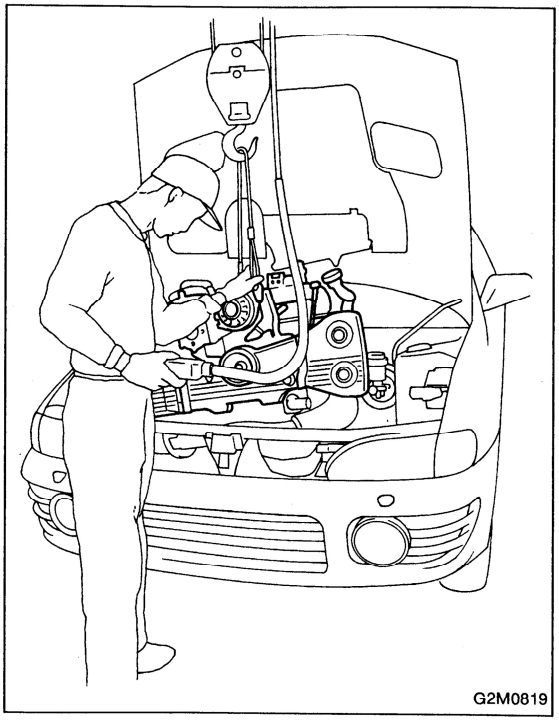
G2M0819

24) Remove engine from vehicle.
(1) Slightly raise engine.
(2) Raise transmission with garage jack.
(3) Move engine horizontally until mainshaft is withdrawn from clutch cover.
(4) Slowly move engine away from engine compartment.

CAUTION:
Be careful not to damage adjacent parts or body panels with crank pulley, oil pressure gauge, etc.

GETtheMANUALS.org

B: INSTALLATION

1. Install clutch release fork and bearing onto transmission.
2. Install engine to transmission.
3. Tighten bolts which hold upper side of transmission to engine.
4. Remove lifting device and wire rope.
5. Remove garage jack.
6. Install pitching stopper.
7. Install starter.
8. Install fuel filter and bracket.
9. Install canister and bracket.
10. Install power steering pump on bracket.
11. Tighten nuts which hold lower side of transmission to engine.
12. Tighten nuts which install front cushion rubber onto crossmember.
13. Install center exhaust pipe.
14. Connect hoses, connectors and cables.
15. Install air intake system.

ith A/C

16. Install A/C pressure hoses.
17. Install cooling system.
18. Install window washer tank.
19. Install battery onto the vehicle, and connect cables.
20. Fill coolant.
21. Charge A/C system with refrigerant.
22. Remove front hood stay, and close front hood.
23. Remove the vehicle from lift arms.

GETtheMANUALS.org

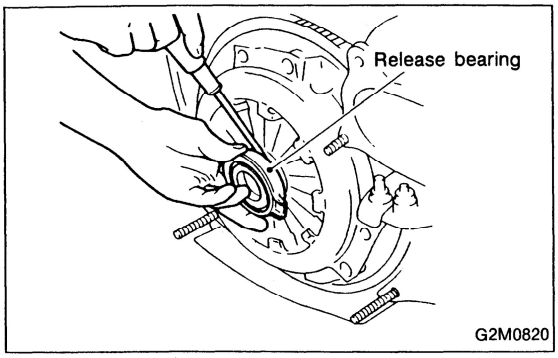

1) Install clutch release fork and bearing onto transmission.
(1) Remove release bearing from clutch cover with flat type screw driver.

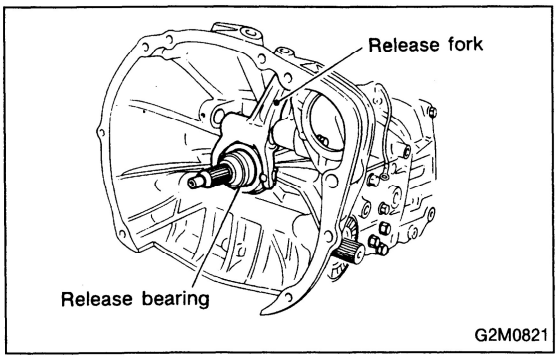

(2) Install release bearing on transmission.
(3) Insert release fork into release bearing tab.

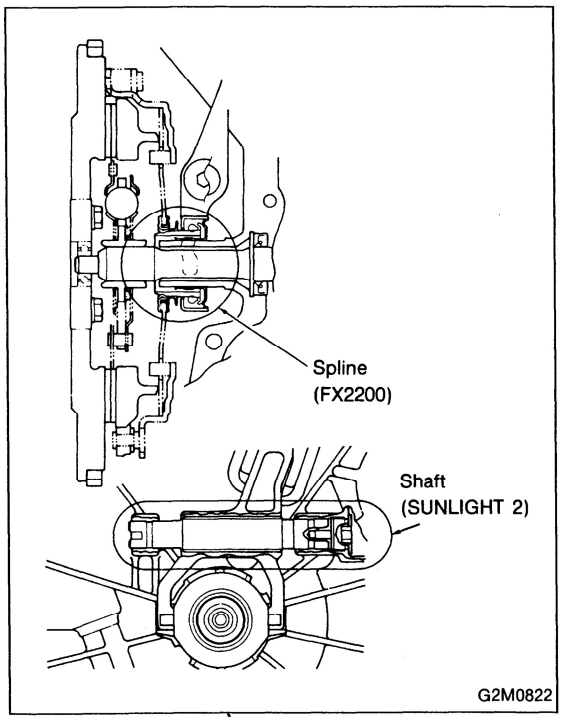

(4) Apply grease to specified points:
- Spline FX2200
- Shaft SUNLIGHT 2

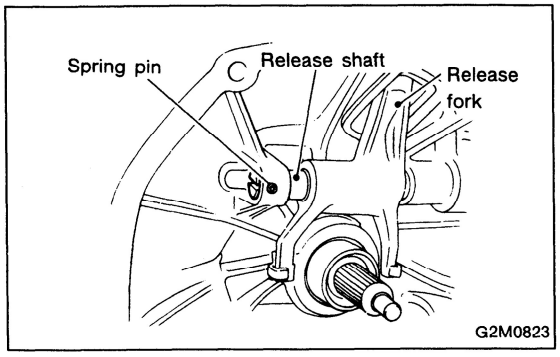

(5) Insert release fork shaft into release fork.

CAUTION:
Make sure the cutout portion of release fork shaft contacts spring pin.

GETtheMANUALS.org

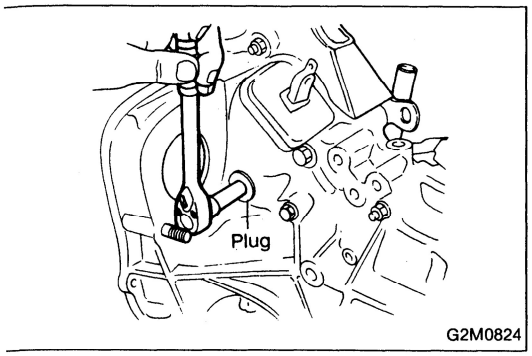

(6) Tighten plug.

Tightening torque:
39 — 49 N·m (4.0 — 5.0 kg-m, 29 — 36 ft-lb)

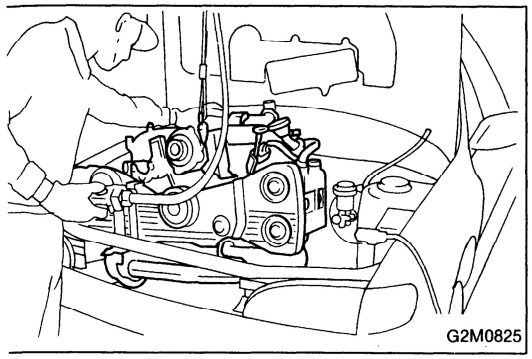

2) Install engine onto transmission.
(1) Position engine in engine compartment and align it with transmission.

CAUTION:
Be careful not to damage adjacent parts or body panels with crank pulley, oil pressure gauge, etc.

(2) Apply a small amount of grease to splines of main-shaft.

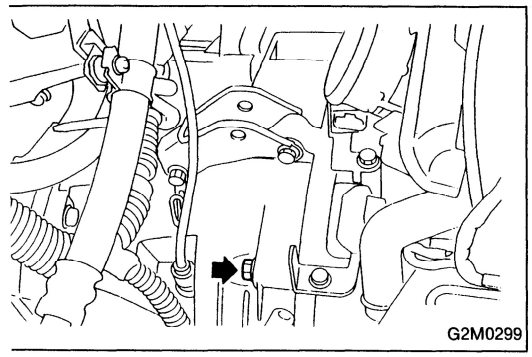

3) Tighten bolt which hold right upper side of transmission to engine.

Tightening torque:
46 — 54 N·m (4.7 — 5.5 kg-m, 34 — 40 ft-lb)

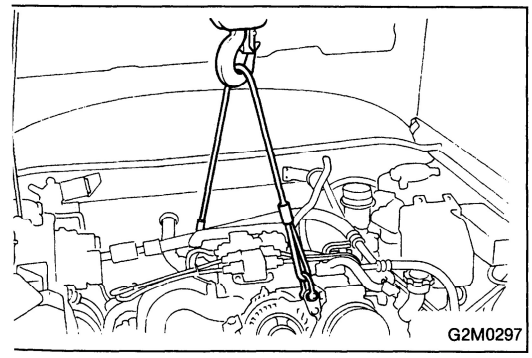

4) Remove lifting device and wire ropes.
5) Remove garage jack.

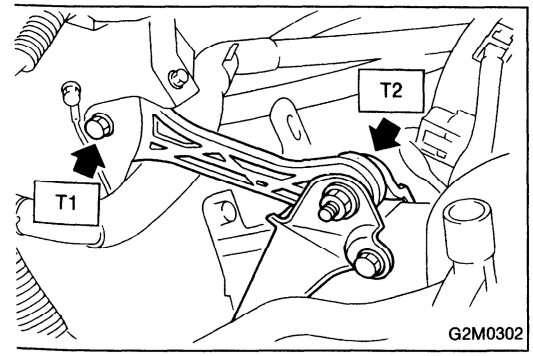

6) Install pitching stopper.

Tightening torque:
T1: 44 — 54 N·m (4.5 — 5.5 kg-m, 33 — 40 ft-lb)
T2: 47 — 67 N·m (4.8 — 6.8 kg-m, 35 — 49 ft-lb)

GETtheMANUALS.org

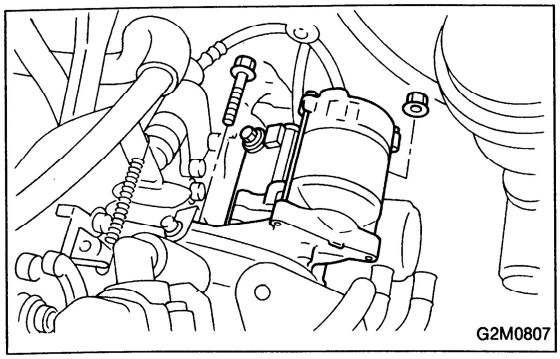

7) Install starter.

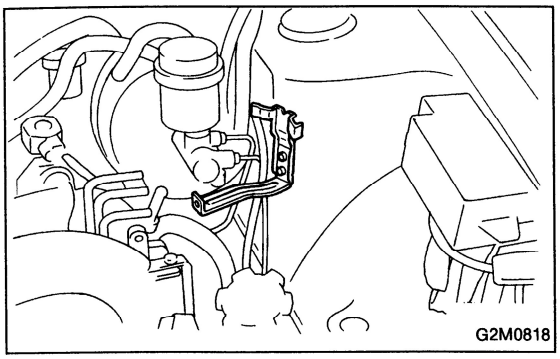

8) Install fuel filter and bracket.

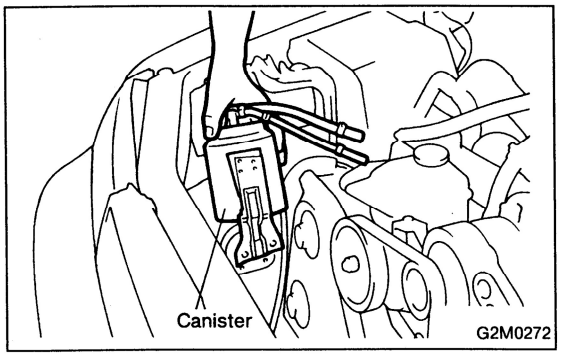

9) Install canister and bracket.
CAUTION:
Insert air vent hose of canister into the hole on body.

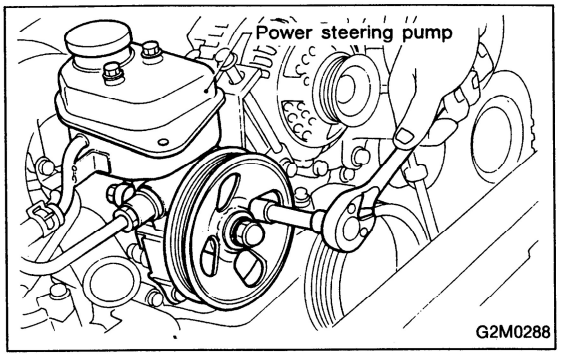

10) Install power steering pump on bracket.
(1) Install power steering pump on bracket, and tighten bolts.

Tightening torque:
29 — 49 N·m (3 — 5 kg-m, 22 — 36 ft-lb)

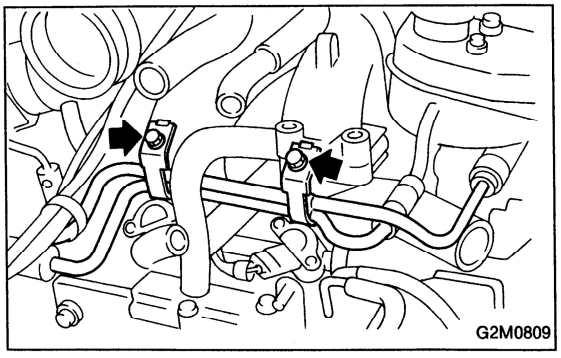

(2) Install power steering pipe bracket on right side intake manifold, and install spark plug codes.

GETtheMANUALS.org

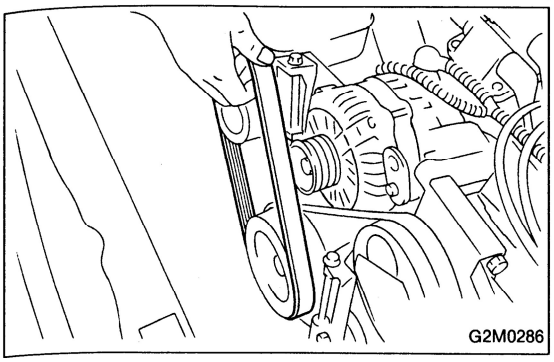
G2M0286

(3) Install front side V-belt, and adjust it.
<Ref. to 1-5 [W1A0].>

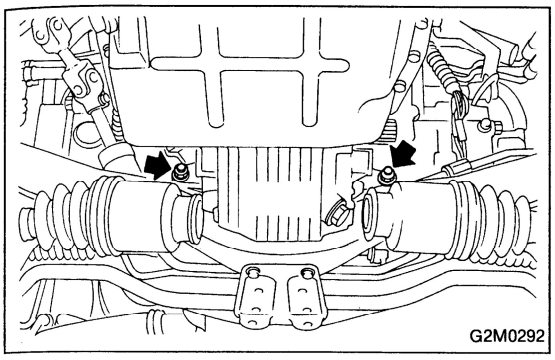
G2M0292

11) Tighten nuts which hold lower side of transmission to engine.

Tightening torque:
46 — 54 N·m (4.7 — 5.5 kg-m, 34 — 40 ft-lb)

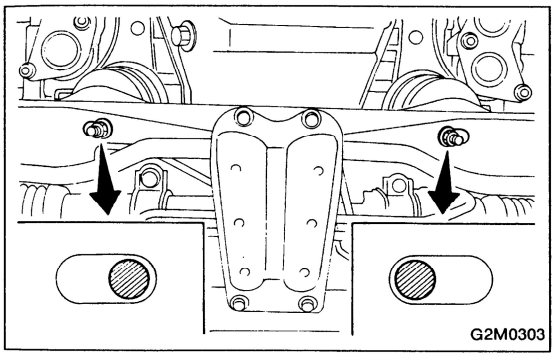
G2M0303

12) Tighten nuts which install front cushion rubber onto crossmember.

Tightening torque:
54 — 83 N·m (5.5 — 8.5 kg-m, 40 — 61 ft-lb)

CAUTION:
Be sure to tighten front cushion rubber mounting bolts in the innermost elliptical hole in the front crossmember.

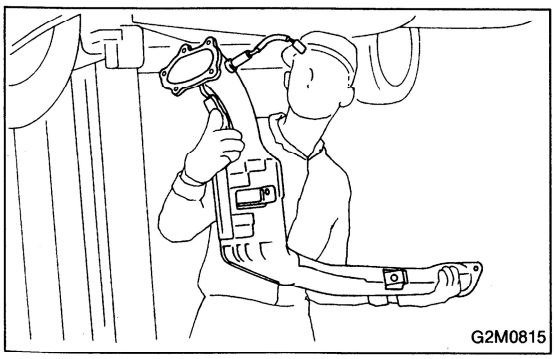
G2M0815

13) Install center exhaust pipe.
(1) Place center exhaust pipe on vehicle.

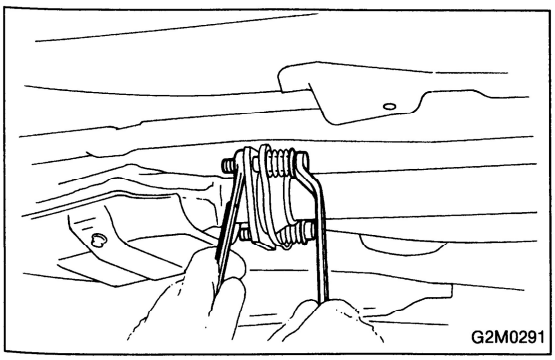
G2M0291

(2) Install center exhaust pipe to rear exhaust pipe.

GETtheMANUALS.org

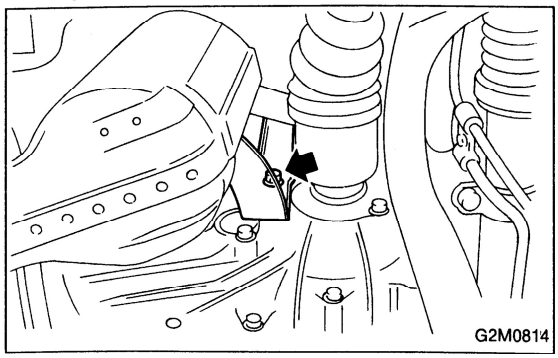

(3) Install intercooler bracket.

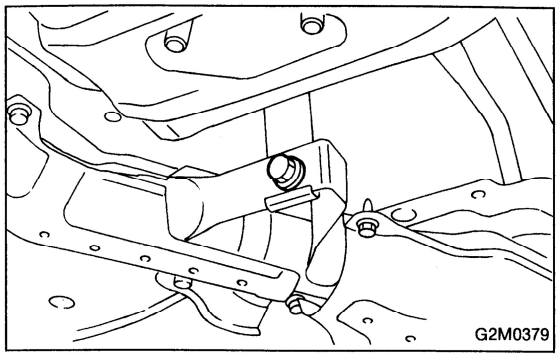

(4) Install bolt which installs center exhaust pipe to hanger bracket.

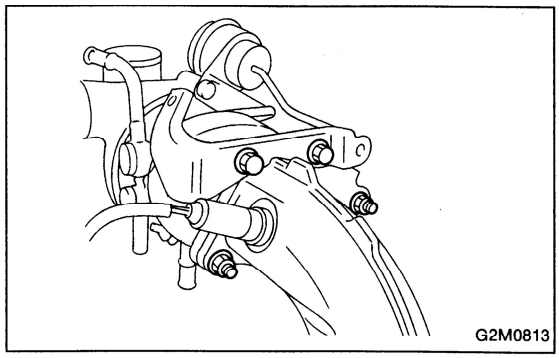

(5) Lower the vehicle.
(6) Install nuts and bolts which install center exhaust pipe to turbocharger.

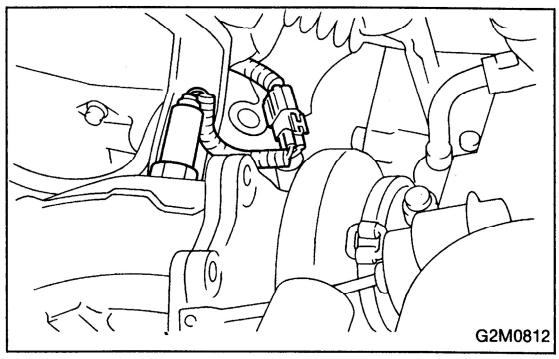

(7) Attach connector to oxygen sensor.

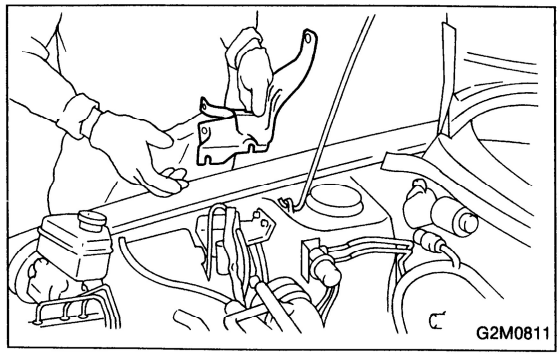

(8) Install turbocharger lower cover.

GETtheMANUALS.org

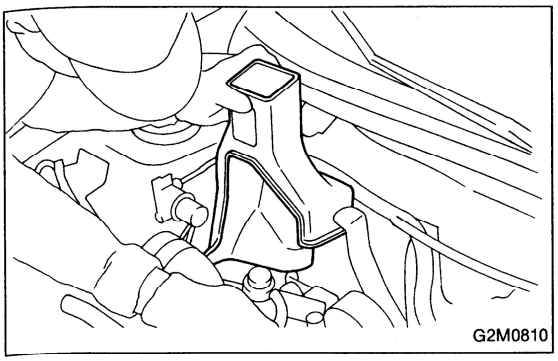
G2M0810

(9) Install turbocharger cooling duct.

14) Connect hoses, connectors and cables.
(1) Connect the following hoses.
- Fuel delivery hose, return hose and evaporation hose
- Heater inlet and outlet hoses
- Brake booster vacuum hose

(2) Connect the following connectors and terminals.
- Engine ground terminal
- Engine harness connectors
- Alternator connector and terminal
- A/C compressor connectors (With A/C)

(3) Connect the following cables.
- Accelerator cable
- Clutch release spring

CAUTION:
After connecting each cable, adjust them.

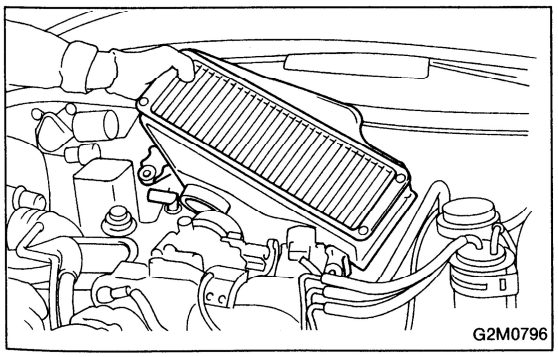
G2M0796

15) Install air intake system.
(1) Install intercooler.

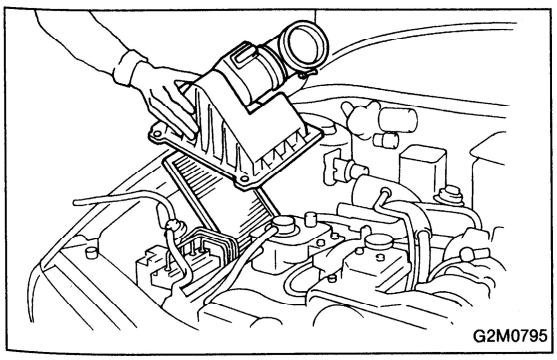
G2M0795

(2) Install air cleaner element and air cleaner upper cover.

GETtheMANUALS.org

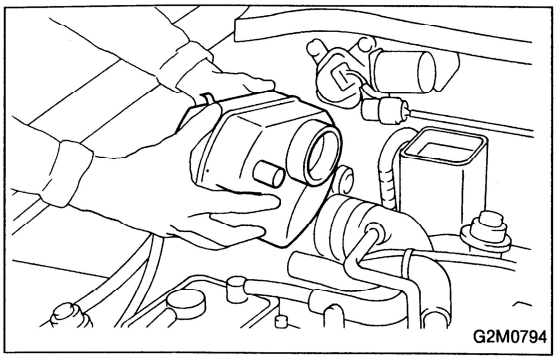
G2M0794

(3) Install resonator chamber.

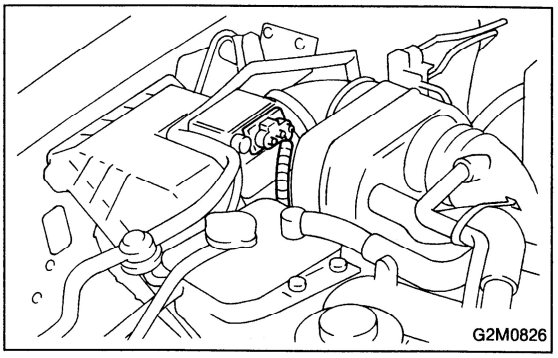
G2M0826

(4) Connect connector to mass air flow sensor.

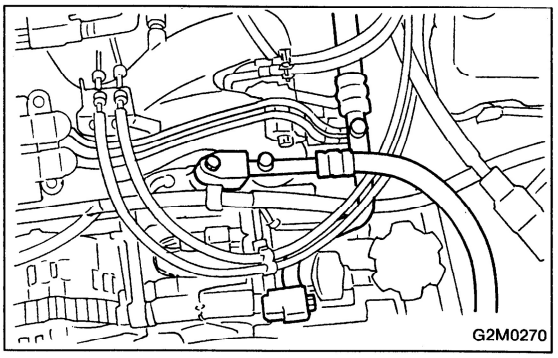
G2M0270

16) Install A/C pressure hoses. (With A/C)
CAUTION:
Use new O-rings.
Tightening torque:
18 — 31 N·m (1.8 — 3.2 kg-m, 13 — 23 ft-lb)

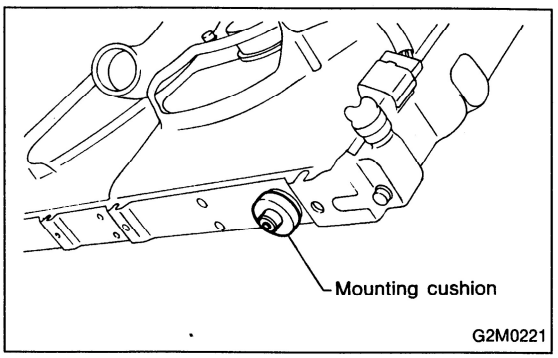

G2M0221

17) Install cooling system.
(1) Attach radiator mounting cushions to pins on lower side of radiator.

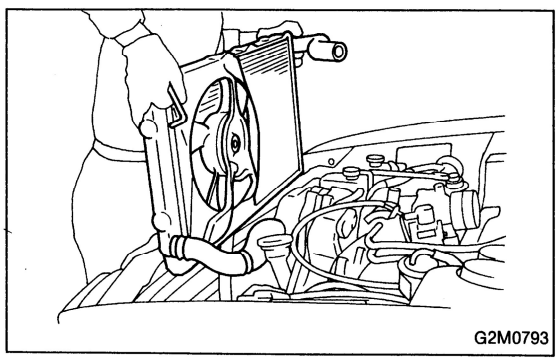
G2M0793

(2) Fit cushions on lower side of radiator, into holes on body side and install radiator.

GETtheMANUALS.org

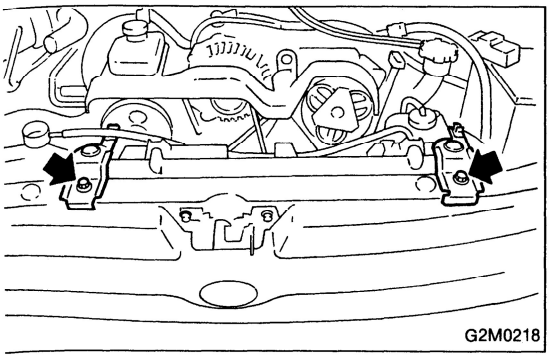

(3) Install radiator brackets and tighten bolts.

Tightening torque:
12.3 — 15.2 N·m
(1.25 — 1.55 kg-m, 9.0 — 11.2 ft-lb)

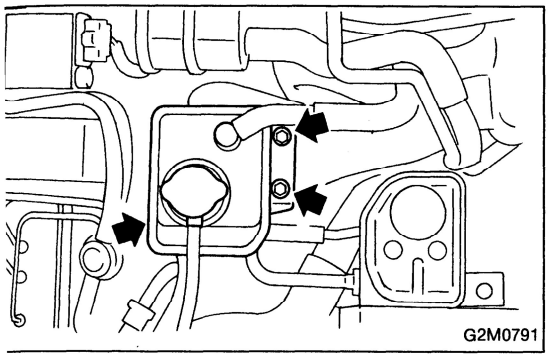

(4) Install coolant filler tank.

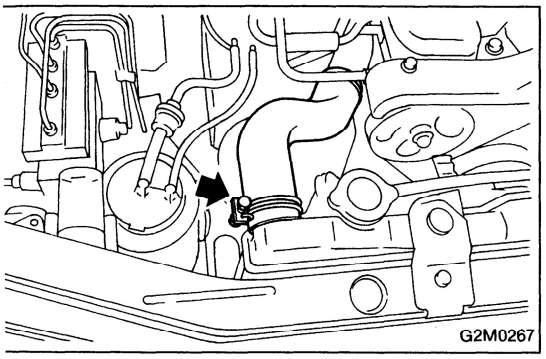

(5) Connect radiator inlet hose.

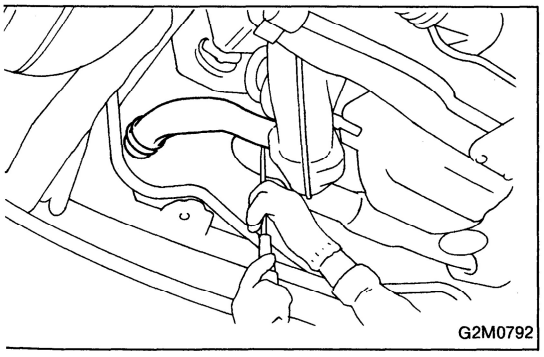

(6) Connect radiator outlet hose.
(7) Connect radiator fan motor connector.

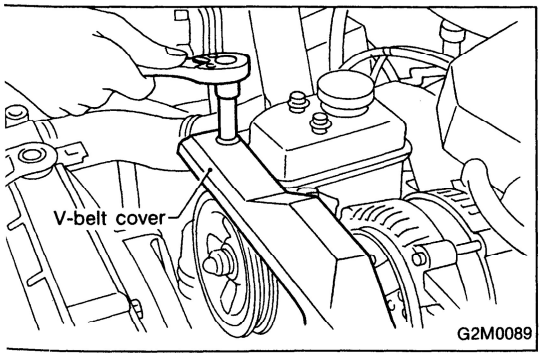

(8) Install V-belt cover.

GETtheMANUALS.org

18) Install window washer tank.
19) Install battery in the vehicle, and connect cables.
20) Fill coolant.
21) Charge A/C system with refrigerant.
<Ref. to 4-7 [W700].>
22) Remove front hood stay, and close front hood.
23) Remove the vehicle from lift arms.

GETtheMANUALS.org

3. Transmission

A: REMOVAL

1. Open front hood fully, and support it with stay.
2. Disconnect battery ground terminal.

↓

3. Remove air intake system.

↓

4. Disconnect connectors and cables.

↓

5. Remove starter.

↓

6. Remove operating cylinder.
7. Remove clutch damper.

↓

8. Remove pitching stopper.

↓

9. Remove transmission connector bracket.

↓

10. Remove exhaust system.

↓

11. Remove propeller shaft.

↓

12. Remove gear shift rod and stay from transmission.

↓

13. Set special tools.

↓

14. Remove bolt which holds right upper side of transmission to engine.

↓

15. Remove bolts which install stabilizer clamp onto crossmember.

↓

16. Remove front drive shaft from transmission.

↓

17. Remove nuts which hold lower side of transmission to engine.

↓

18. Place transmission jack under transmission.

↓

19. Remove transmission rear crossmember.

↓

20. Remove transmission.

GETtheMANUALS.org

1) Open front hood fully, and support with stay.
2) Disconnect battery ground terminal.

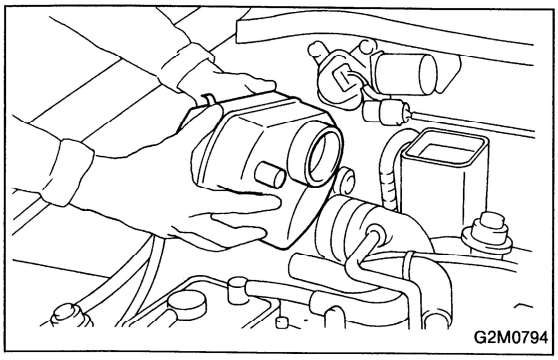
G2M0794

3) Remove air intake system.
   (1) Remove resonator chamber.

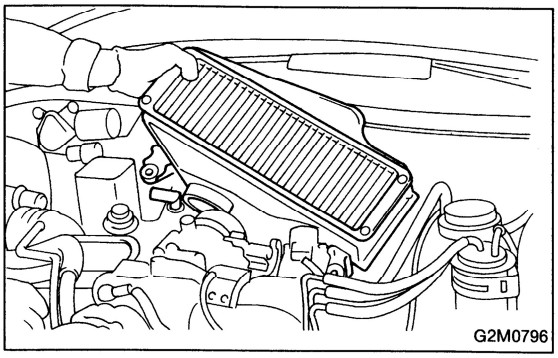
G2M0796

   (2) Remove intercooler.

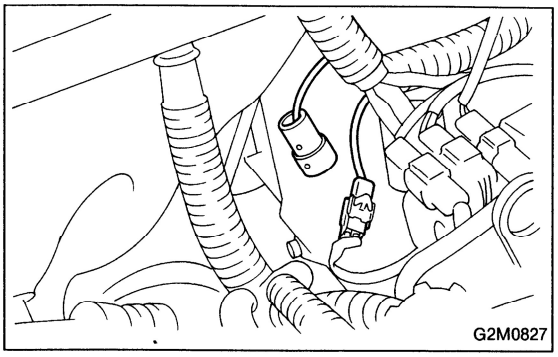
G2M0827

4) Disconnect connectors and cables.
   (1) Disconnect the following connectors.
   - Vehicle speed sensor 2

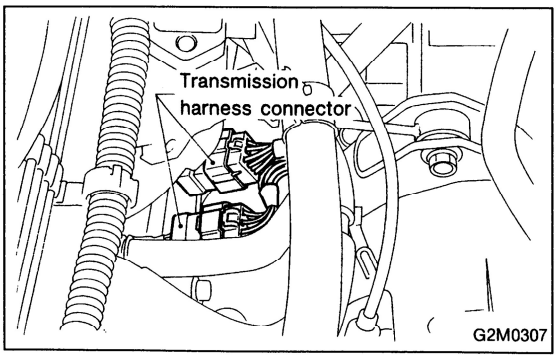

G2M0307

   - Transmission harness connector
   - Transmission ground terminal

GETtheMANUALS.org

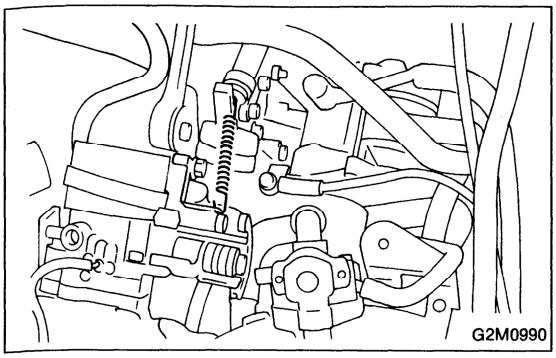

(2) Disconnect the following cable.
- Clutch release spring

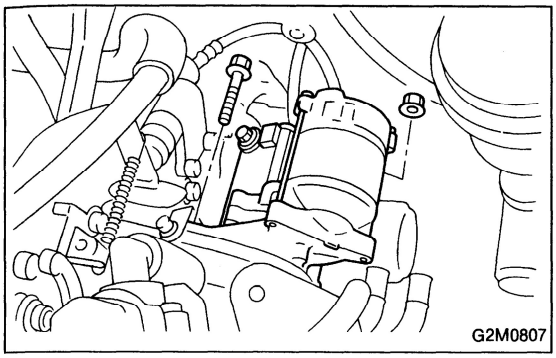

5) Remove starter.
(1) Disconnect connectors and terminal from starter.
(2) Remove bolt which installs upper side of starter.
(3) Remove nut which installs lower side of starter, and remove starter from transmission.

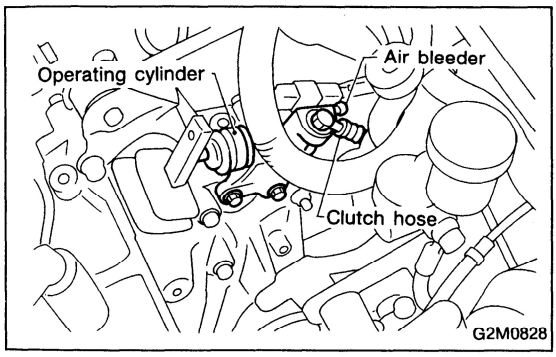

6) Remove operating cylinder.

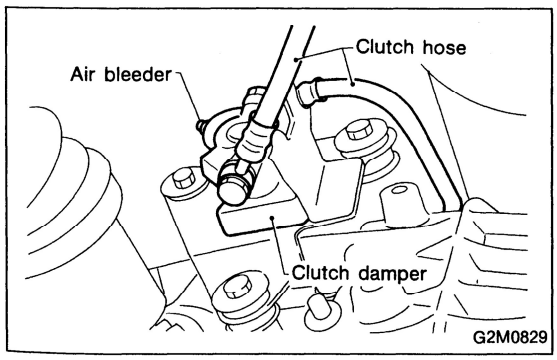

7) Remove clutch damper.

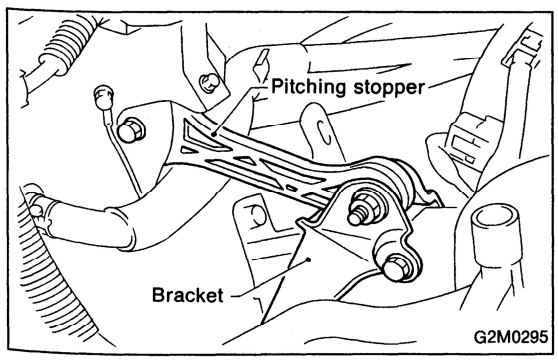

8) Remove pitching stopper.

GETtheMANUALS.org

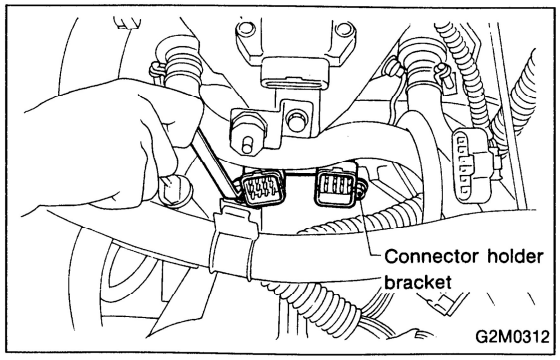

9) Remove transmission connector holder bracket.

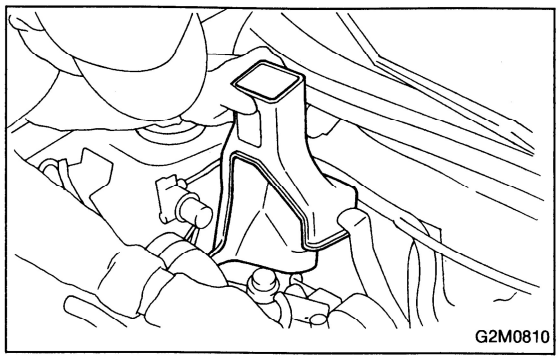

10) Remove exhaust system.
(1) Remove turbocharger cooling duct.

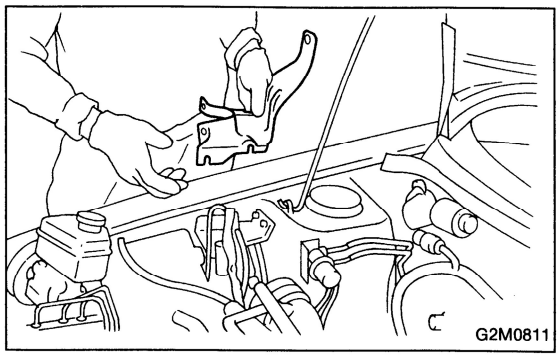

(2) Remove turbocharger lower cover.

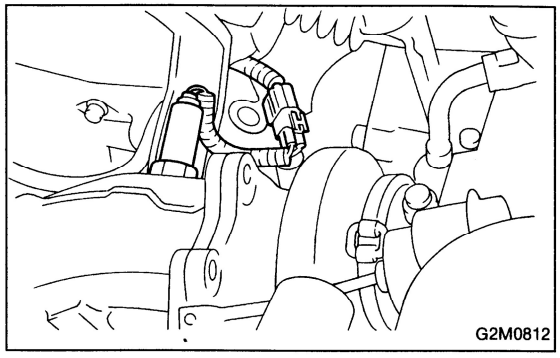

(3) Disconnect connector from oxygen sensor.

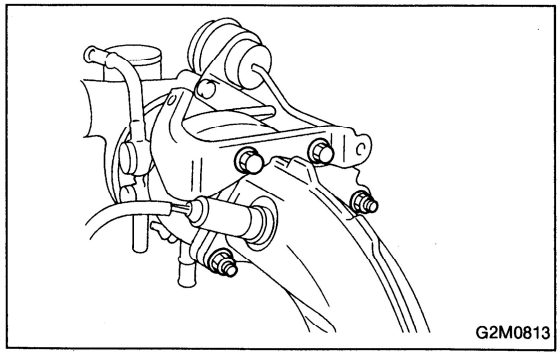

(4) Remove nuts and bolts which install center exhaust pipe to turbocharger.

GETtheMANUALS.org

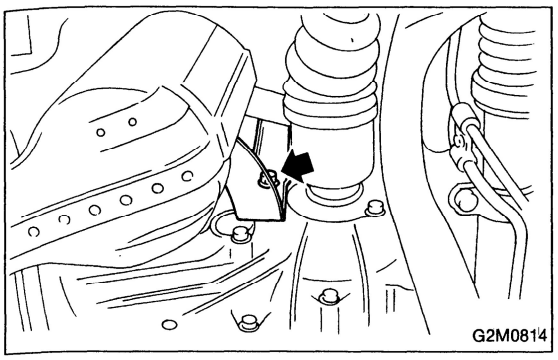

(5) Lift up the vehicle.
(6) Remove intercooler bracket.

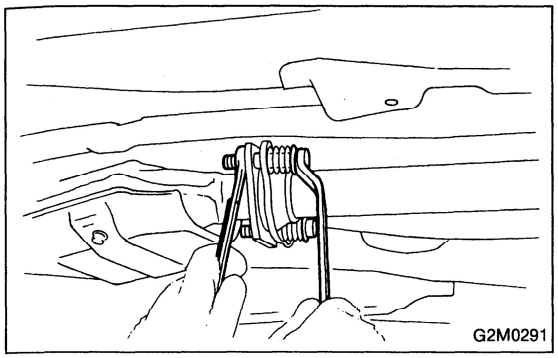

(7) Separate center exhaust pipe from rear exhaust pipe.

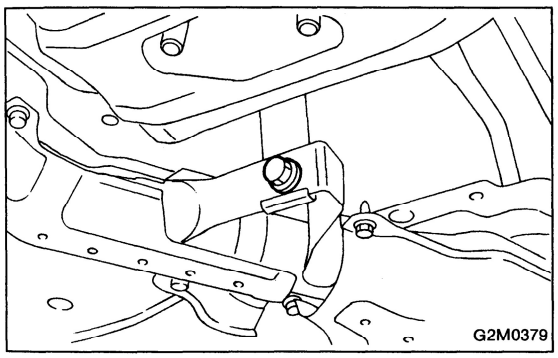

(8) Remove bolt which installs center exhaust pipe on hunger bracket.

CAUTION:
Exhaust pipe will drop when all bolts are removed. So, hold it when removing the last bolt.

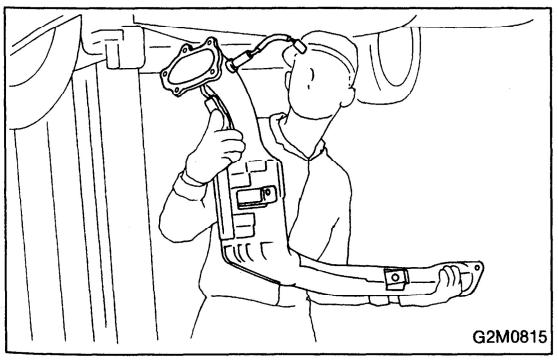

(9) Remove center exhaust pipe.

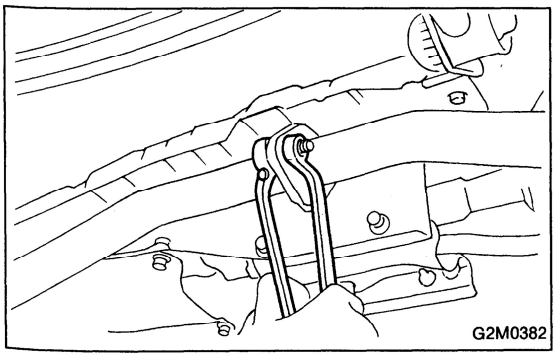

(10) Separate rear exhaust pipe from muffler.

GETtheMANUALS.org

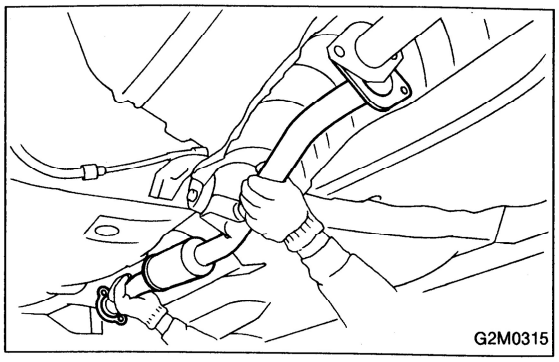

(11) Remove rear exhaust pipe.

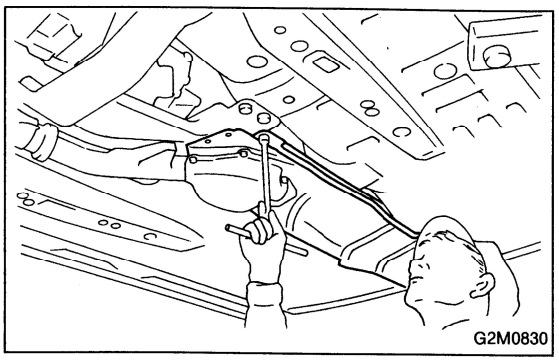

11) Remove propeller shaft.
(1) Remove heat shield cover.

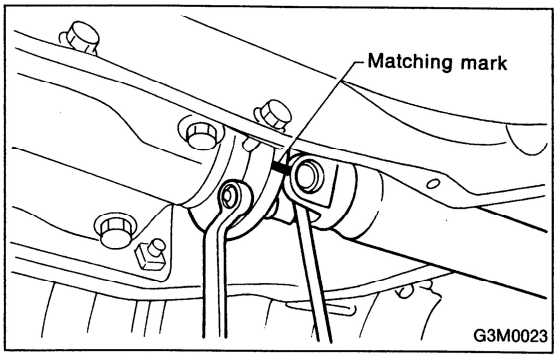

(2) Remove front cover of rear differential mount.
(3) Separate propeller shaft from rear differential.

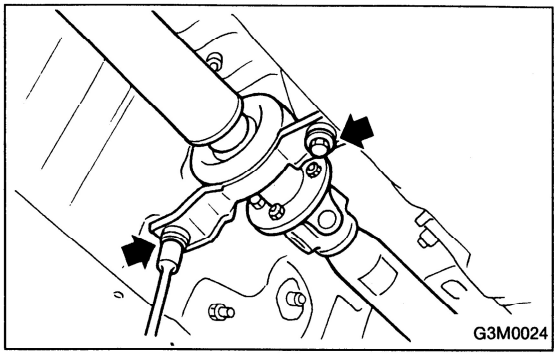

(4) Remove bolts which hold center bearing onto body.

CAUTION:
Be careful not to drop propeller shaft.

(5) Remove propeller shaft from transmission.

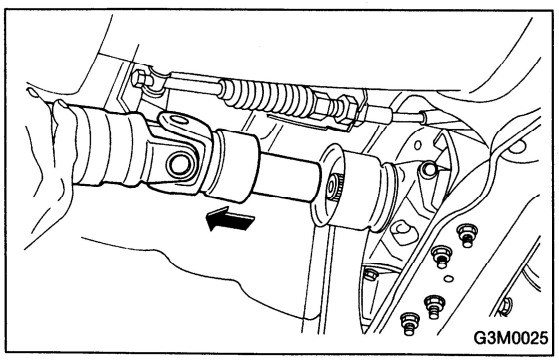

CAUTION:
- **Be sure to use an empty container to catch oil flowing out when removing propeller shaft.**
- **Be sure not to damage oil seals and the frictional surface of sleeve yoke.**
- **Be sure to plug the opening in transmission after removal of propeller shaft.**

GETtheMANUALS.org

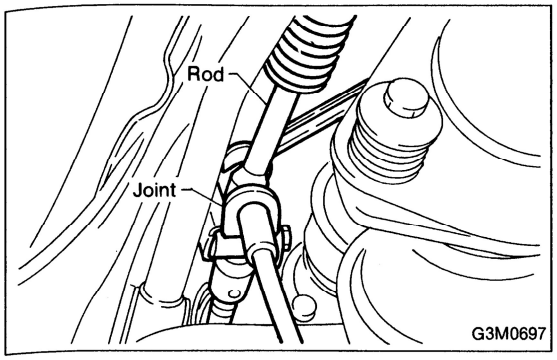

12) Remove gear shift rod and stay from transmission.
(1) Remove spring.
(2) Disconnect stay from transmission.
(3) Disconnect rod from transmission.

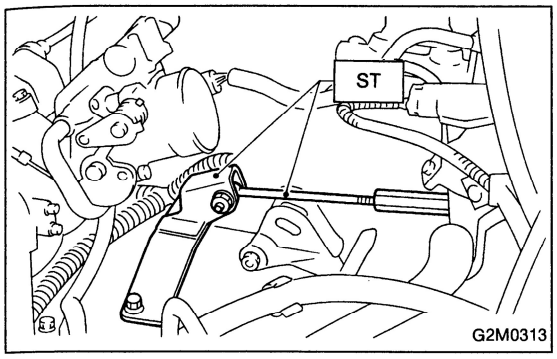

13) Lower the vehicle, and set special tool.
ST 41099AA000 ENGINE SUPPORT
NOTE:
Also is available Part No. 927670000.

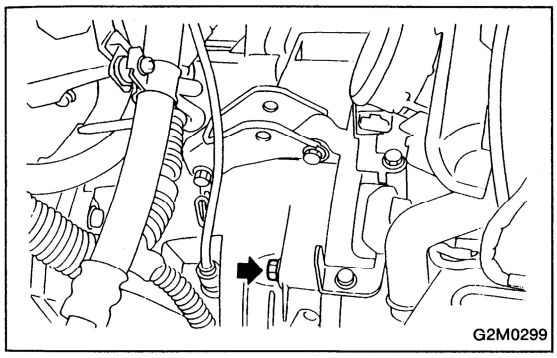

14) Remove bolt which holds right upper side of transmission to engine.

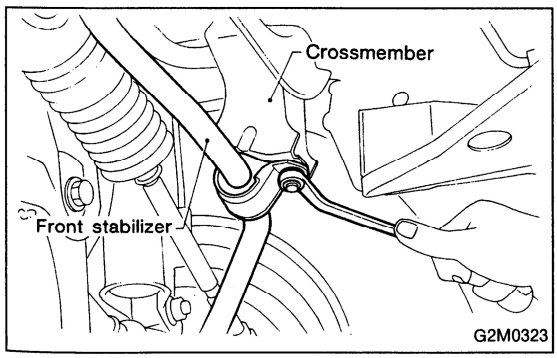

15) Remove bolts which install stabilizer clamp onto crossmember.

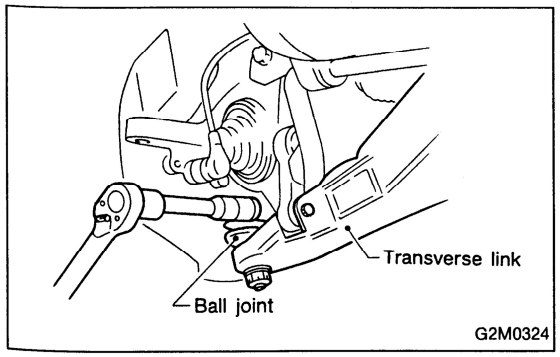

16) Remove front drive shaft from transmission.
(1) Remove transverse link from housing.
(2) Lower transverse link.

GETtheMANUALS.org

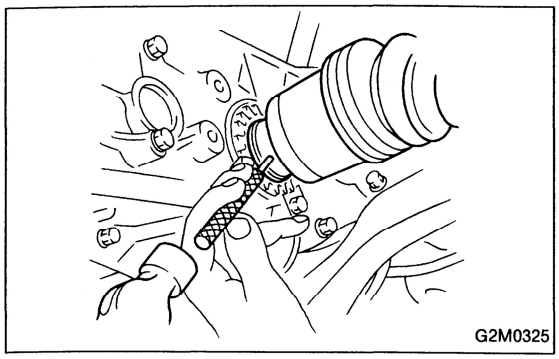

(3) Remove spring pin and separate front drive shaft from each side of the transmission.

CAUTION:
Discard removing spring pin. Replace with a new one.

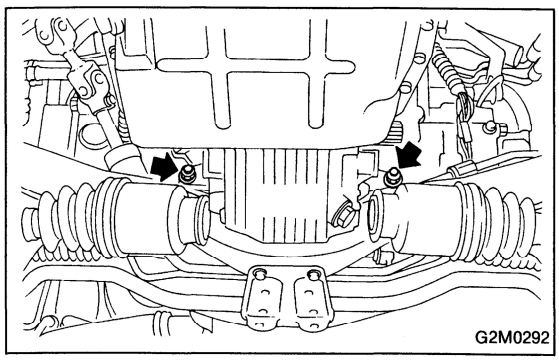

17) Remove nuts which hold lower side of transmission to engine.

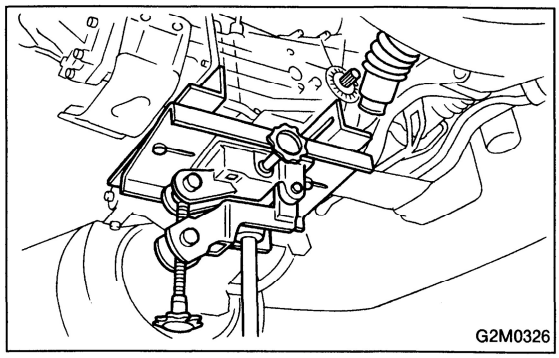

18) Place transmission jack under transmission.

CAUTION:
Always support transmission case with a transmission jack.

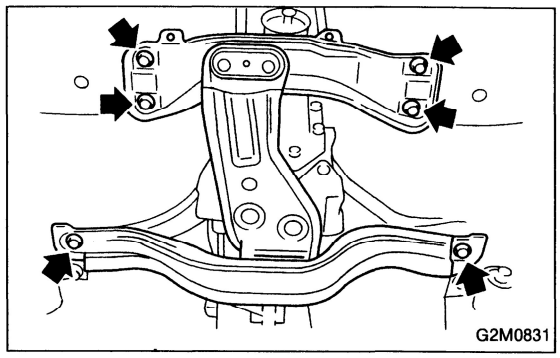

19) Remove transmission rear crossmember.

20) Remove transmission.

CAUTION:
Move transmission jack toward rear until mainshaft is withdrawn from clutch cover.

GETtheMANUALS.org

B: INSTALLATION

1. Install clutch release fork and bearing onto transmission.
↓
2. Install transmission to engine.
↓
3. Install transmission rear crossmember.
↓
4. Take off transmission jack.
↓
5. Tighten nuts which hold lower side of transmission to engine.
↓
6. Tighten bolt which holds right upper side of transmission to engine.
↓
7. Remove special tools.
8. Install pitching stopper and bracket.
↓
9. Install front drive shaft into transmission.
↓
10. Install stabilizer clamp onto front crossmember.
↓
11. Install gear shift rod and stay.
↓
12. Install propeller shaft.
↓
13. Install exhaust system.
↓
14. Install clutch damper.
15. Install operating cylinder.
↓
16. Install transmission connector holder bracket.
↓
17. Connect connectors and cables.
↓
18. Install starter.
↓
19. Install air intake system.
↓
20. Connect battery ground cable.
21. Take off the vehicle from lift arm.

GETtheMANUALS.org

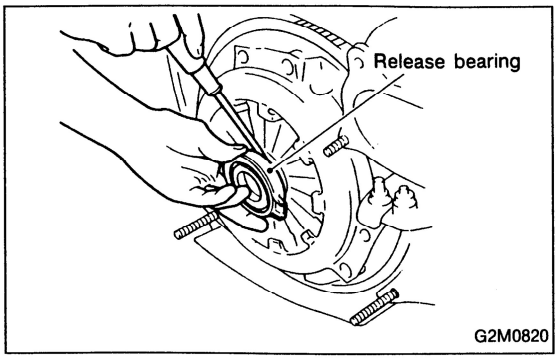

1) Install clutch release fork and bearing onto transmission.
(1) Remove release bearing from clutch cover with flat type screwdriver.

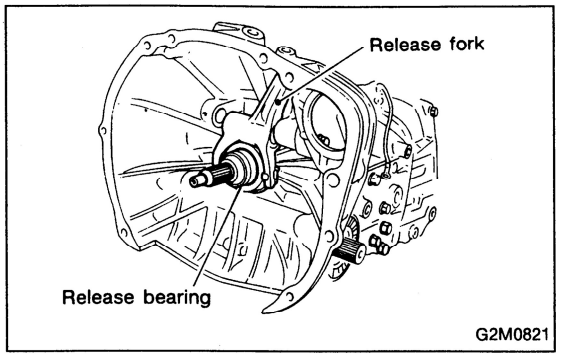

(2) Install release bearing onto transmission.
(3) Insert release fork into release bearing tab.

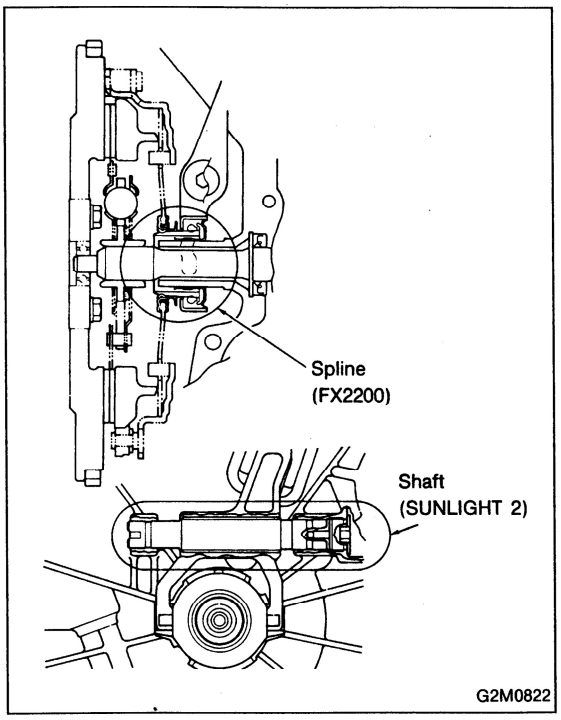

(4) Apply grease to specified points:
- Spline FX2200
- Shaft SUNLIGHT 2

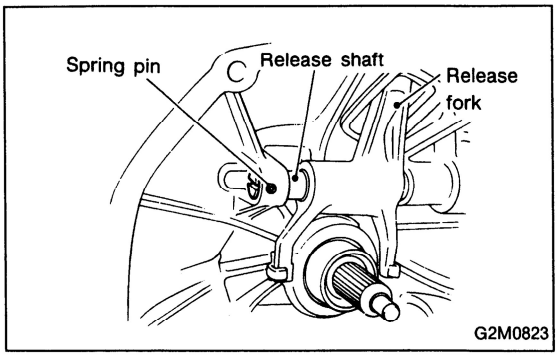

(5) Insert release fork shaft into release fork.

CAUTION:
Make sure the cutout portion of release fork shaft contacts spring pin.

GETtheMANUALS.org

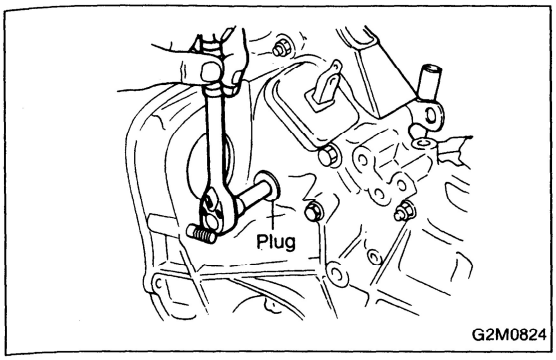

(6) Install plug.

Tightening torque:
41 — 47 N·m (4.2 — 4.8 kg-m, 30 — 35 ft-lb)

2) Install transmission onto engine.
(1) Gradually raise transmission with transmission jack.
(2) Engage them at splines.

CAUTION:
Be careful not to strike mainshaft against clutch cover.

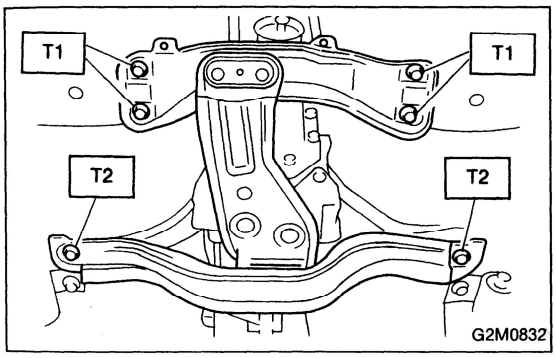

3) Install transmission rear crossmember.

Tightening torque:
T1: 54 — 83 N·m (5.5 — 8.5 kg-m, 40 — 61 ft-lb)
T2: 118 — 157 N·m (12 — 16 kg-m, 87 — 116 ft-lb)

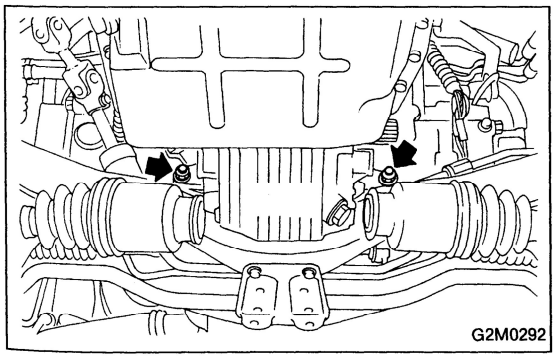

4) Take off transmission jack.
5) Tighten nuts which hold lower side of transmission to engine.

Tightening torque:
46 — 54 N·m (4.7 — 5.5 kg-m, 34 — 40 ft-lb)

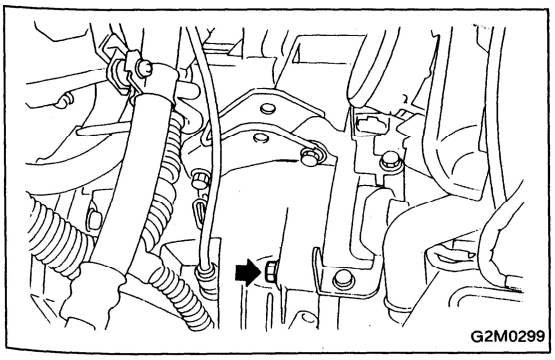

6) Tighten bolt which holds right upper side of transmission to engine.

Tightening torque:
46 — 54 N·m (4.7 — 5.5 kg-m, 34 — 40 ft-lb)

GETtheMANUALS.org

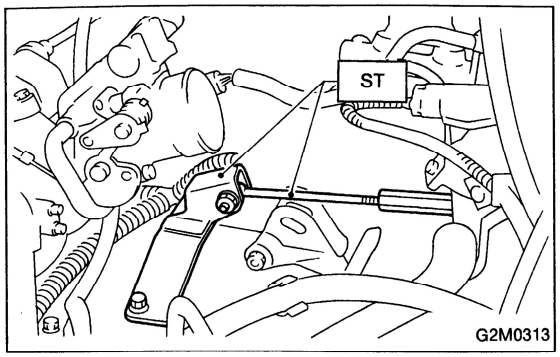

7) Remove special tool.

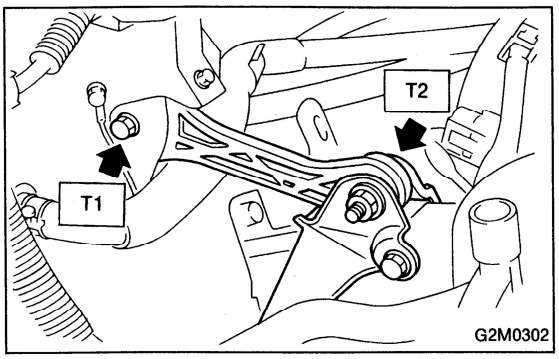

8) Install pitching stopper.

Tightening torque:

T1: 44 — 54 N·m (4.5 — 5.5 kg-m, 33 — 40 ft-lb)

T2: 47 — 67 N·m (4.8 — 6.8 kg-m, 35 — 49 ft-lb)

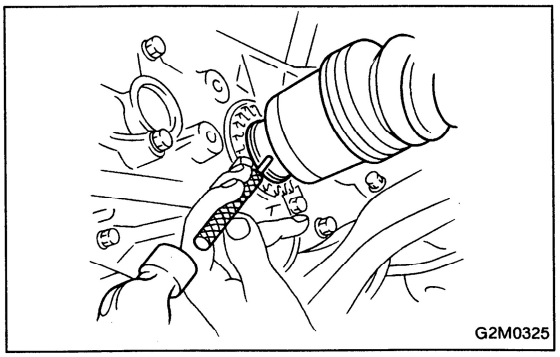

9) Install front drive shaft into transmission.
   (1) Lift up the vehicle.
   (2) Install front drive shaft into transmission.
   (3) Drive spring pin into chamfered hole of drive shaft.

CAUTION:

Always use a new spring pin.

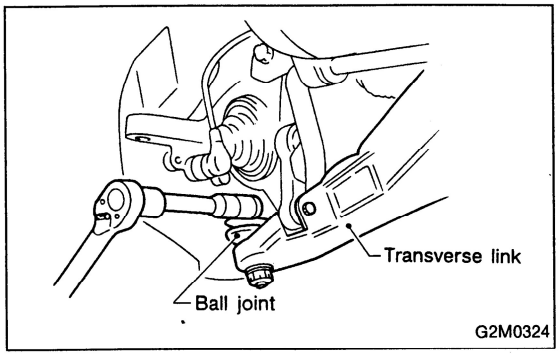

(4) Install ball joint of lower arm into knuckle arm of housing, and tighten installing bolt.

Tightening torque:

25 — 29 N·m (2.5 — 3.0 kg-m, 18 — 22 ft-lb)

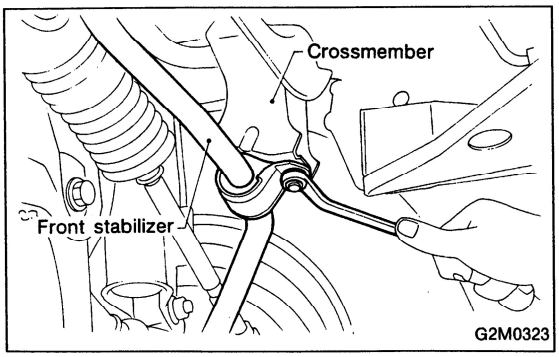

10) Install stabilizer clamp onto front crossmember.

Tightening torque:

21 — 28 N·m (2.1 — 2.9 kg-m, 15 — 21 ft-lb)

GETtheMANUALS.org

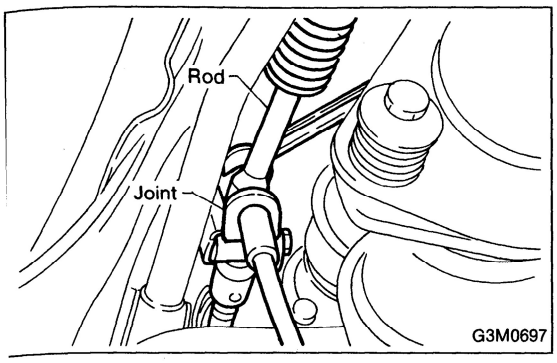

11) Install gear shift rod and stay.
(1) Install gear shift rod onto transmission.
(2) Install stay onto transmission.
(3) Install spring.

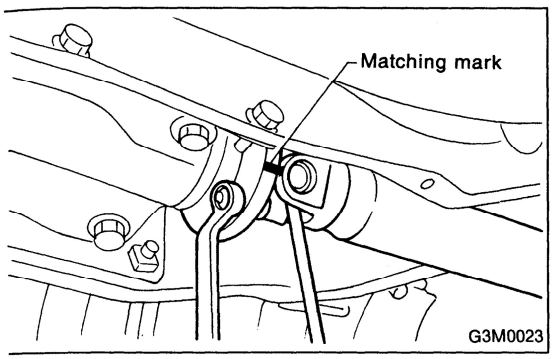

12) Install propeller shaft.
(1) Install propeller shaft into transmission.
(2) Tighten bolts which install propeller shaft onto companion flange of rear differential.

Tightening torque:
24 — 39 N·m (2.4 — 4.0 kg-m, 17 — 29 ft-lb)

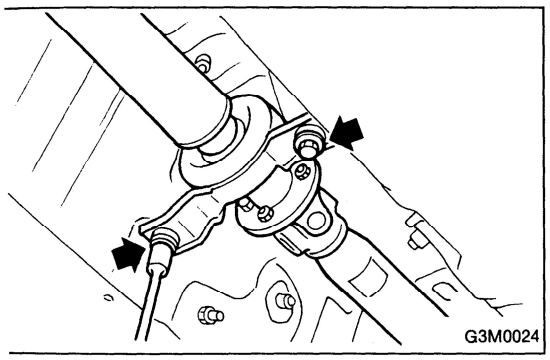

(3) Install center bearing bracket on body.

Tightening torque:
47 — 57 N·m (4.8 — 5.8 kg-m, 35 — 42 ft-lb)

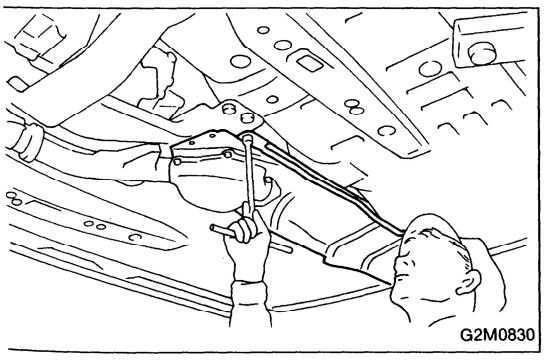

(4) Install heat shield cover.

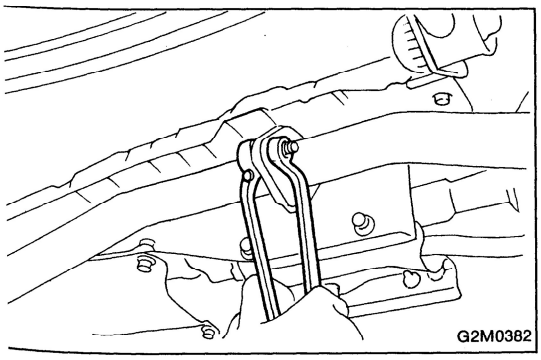

13) Install exhaust system.
(1) Install rear exhaust pipe to muffler.

Tightening torque:
43 — 53 N·m (4.4 — 5.4 kg-m, 32 — 39 ft-lb)

GETtheMANUALS.org

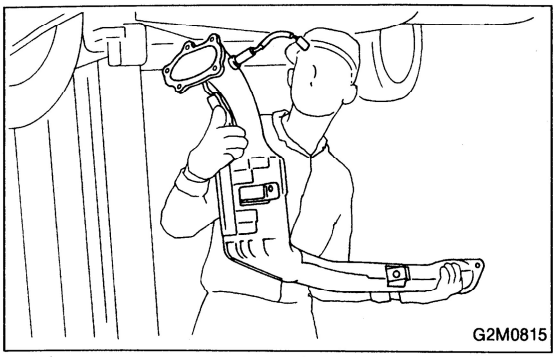

(2) Place center exhaust pipe on vehicle.

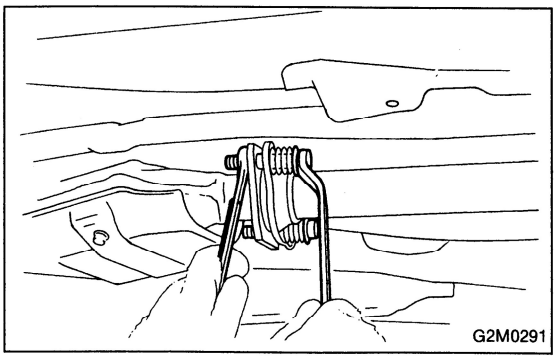

(3) Install center exhaust pipe to rear exhaust pipe.

Tightening torque:
13 — 23 N·m (1.3 — 2.3 kg-m, 9 — 17 ft-lb)

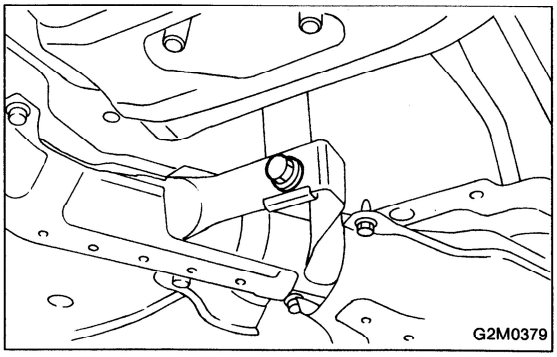

(4) Tighten bolt which installs center exhaust pipe to hunger bracket.

Tightening torque:
25 — 35 N·m (2.5 — 3.6 kg-m, 18 — 26 ft-lb)

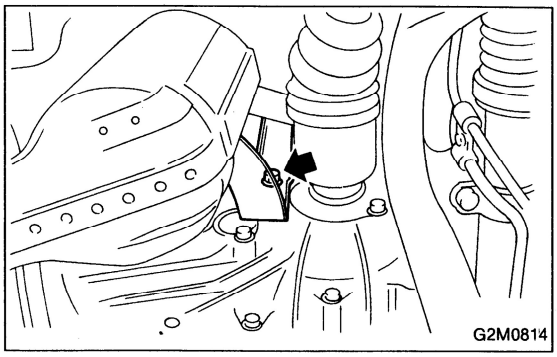

(5) Install intercooler bracket.

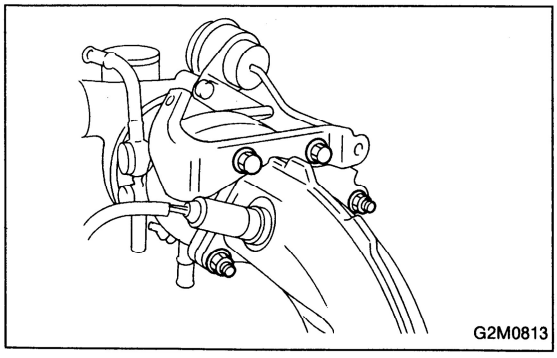

(6) Lower the vehicle.
(7) Install nuts and bolts which install center exhaust pipe to turbocharger.

GETtheMANUALS.org

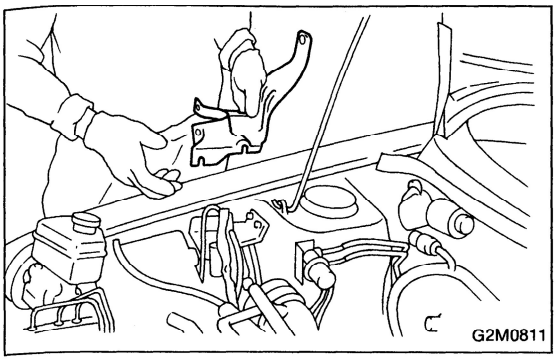

(8) Install turbocharger lower cover.

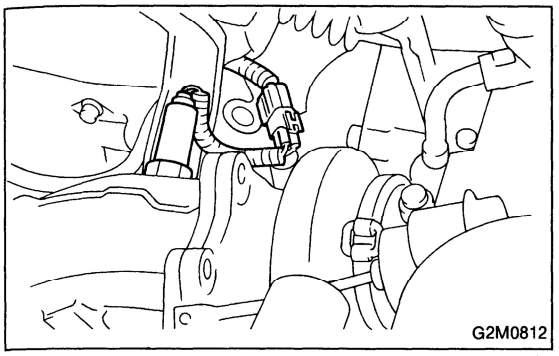

(9) Attach connector to oxygen sensor.

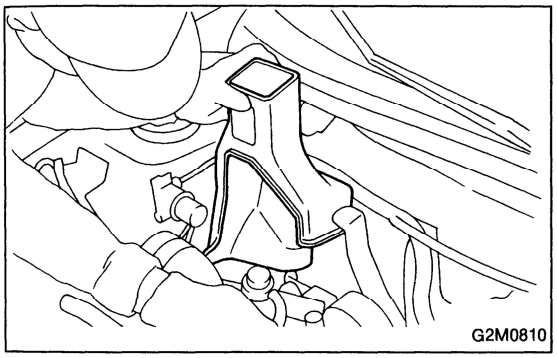

(10) Install turbocharger cooling duct.

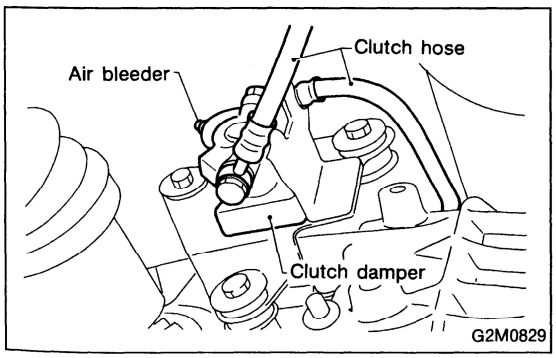

14) Install clutch damper. (LHD model)

Tightening torque:
18 — 31 N·m (1.8 — 3.2 kg-m, 13 — 23 ft-lb)

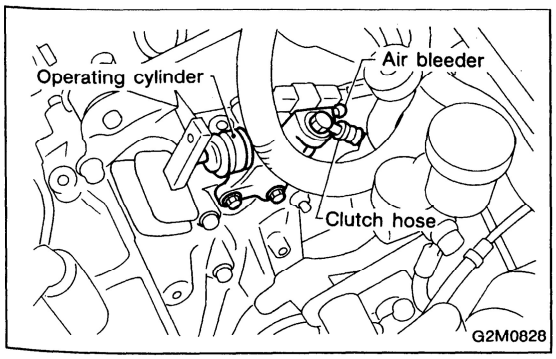

15) Install operating cylinder.

Tightening torque:
34 — 40 N·m (3.5 — 4.1 kg-m, 25 — 30 ft-lb)

GETtheMANUALS.org

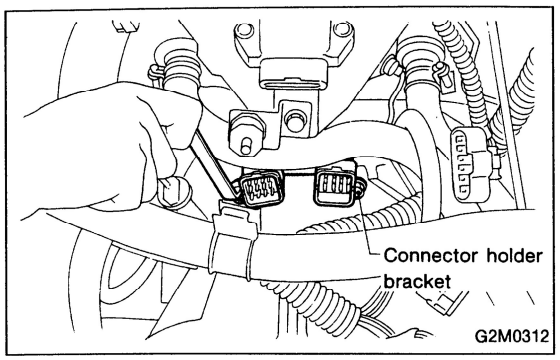

16) Install transmission connector holder bracket.

17) Connect connectors and cables.
(1) Connect the following connectors.
- Transmission harness connectors
- Transmission ground terminal
- Vehicle speed sensor 2

(2) Connect the following cable.
- Clutch release spring

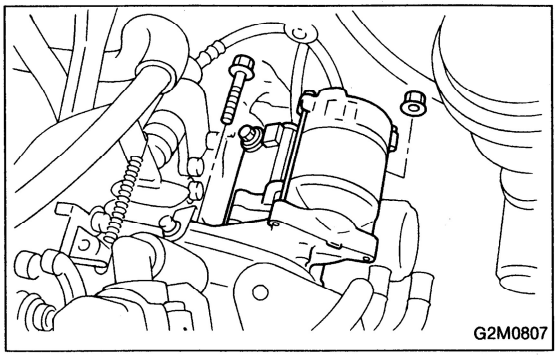

18) Install starter.
(1) Install starter onto transmission case, and connect connectors and terminals.
(2) Tighten bolt and nut which install starter onto transmission.

Tightening torque:
46 — 54 N·m (4.7 — 5.5 kg-m, 34 — 40 ft-lb)

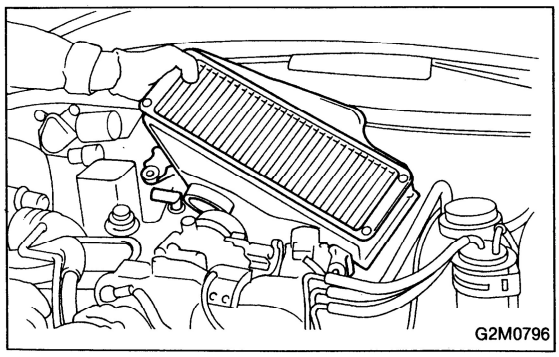

19) Install air intake system.
(1) Install intercooler.

GETtheMANUALS.org

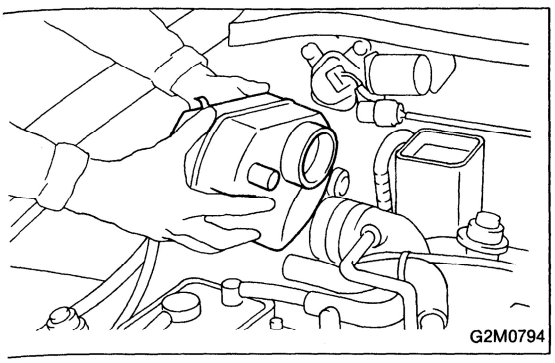

(2) Install resonator chamber.

20) Connect battery ground cable.
21) Take off vehicle from lift arms.

GETtheMANUALS.org