OWNER'S HANDBOOK

CITROËN NEMO

CITROËN

YOUR HANDBOOK ON THE INTERNET!

CITROËN lets you view your vehicle's documentation on line, to see earlier versions and the latest information, simply and free of charge.

CITROËN SERVICE
http://service.citroen.com

Connect to **http://service.citroen.com**:

1 | Select your language and register,

2 | click on the link in the "Private customer access" zone to consult the vehicle documentation; a window opens providing access to all of the handbooks,

3 | select your vehicle, choose the body type then the date of issue of the handbook,

4 | finally, click on the heading of your choice.

We draw your attention to the following...

Your vehicle is fitted with only some of the equipment described in this document, depending on the trim level, version and the specifications for the country in which it is sold.

The fitting of electrical equipment or accessories which are not recommended by CITROËN may result in a failure of your vehicle's electronic system. Please note this specific warning and contact a CITROËN dealer to be shown the recommended equipment and accessories.

Key

directs you to additional information,

indicates important information relating to the use of a system

alerts you to the safety of individuals and the use of vehicle systems.

CITROËN has a presence on every continent,

a complete product range,

bringing together technology and a permanent spirit of innovation,

for a modern and creative approach to mobility.

We thank you and congratulate you on your choice.

At the wheel of your new vehicle,

getting to know each system,

each control, each setting,

makes your trips, your journeys

more comfortable and more enjoyable.

Happy motoring!

FAMILIARISATION 4-20

Exterior 4
Access 5
Interior 6
Instruments and controls 7
Load space 8
Rear fittings 9
Sitting comfortably 10
Seeing clearly 12
Ventilation 13
Monitoring 14
Passenger safety 15
Driving safely 16
Starting 18
Eco-driving 19

1. READY TO GO 21-57

Instrument panels 21
Warning lamps 22
Fuel gauge 29
Coolant temperature 29
Service indicator and engine oil warning lamp 30
Lighting dimmer 30
Remote control 31
Key 33
Confidential card 34
Alarm 35
Opening 36
Closing 39
Lighting stalk 41
Wipers stalk 43
Cruise control 44
Fixed speed limiter 45
Mirrors 46
Electric windows 47
Steering wheel adjustment 48
Manual gearbox 48
Gear shift indicator 49
Electronic gearbox 50
Hill start assist 54
Stop & Start 55

2. TECHNICAL DATA 58-67

Dimensions 58
Engines 64
Weights 66

3. TECHNOLOGY on BOARD 68-94

Trip computer/ Configuration - Personailsation of the vehicle 68
Rear parking sensors 72
Audio equipment 73
Steering mounted controls 74
Bluetooth hands-free system 77

4. EASE OF USE and COMFORT 95-112

Front seats 95
Retractable passenger seat 97
Rear bench seat 98
De-icing and demisting 102
Air conditioning 103
Front fittings 106
Load space fittings 108
Rear layout 110
Interior lighting 112

5. SAFETY 113-130

Parking brake 113
Hazard warning lights 113
Horn 114
Braking assistance systems 114
Trajectory control systems 115
Seat belts 118
Airbags 120
Child seats 124
ISOFIX mountings 129

6. ACCESSORIES 131-134

Towing a trailer, caravan, etc... 131
Roof rack and roof bars 133
Other accessories 133

7. QUICK HELP 135-166

Battery 135
Changing a wheel 138
Temporary puncture repair kit 141
Changing a bulb 143
Changing a wiper blade 148
Changing a fuse 149
Being towed 154
Identification features 155
Filling with fuel 156
Opening the bonnet 159
Levels 162
Checks 164

8. VISUAL SEARCH 167-174

Exterior 167
Interior 169
Instruments and controls 172
Technical data - Maintenance 174

4 EXTERIOR

Roof rack and roof bars

Fixing points are provided on each side of the roof for securing the roof rack or the transverse roof bars.

⏭ 133

Rear parking sensors

This system warns you, by means of an audible signal, if an obstacle is detected behind the vehicle when reverse gear is engaged.

⏭ 72

Stop & Start

This system puts the engine temporarily into standby during stops in the traffic (red lights, traffic jams, etc...). The engine restarts automatically as soon as you want to move off. Stop & Start reduces fuel consumption and exhaust emissions, and gives the comfort of total silence when stationary.

⏭ 55

Opening the hinged rear doors to 180°

Once the vehicle has been unlocked, the hinged rear doors can be opened to 180° to make unloading/loading operations easier.

⏭ 37

ACCESS

Remote control key

A. Unfolding/Folding the key.

B. Unlocking the front doors only (Light van) or of all of the doors (Combi)

(two flashes of the direction indicators).

C. Central locking the vehicle

(one press; one flash of the direction indicators).

or

Deadlocking the vehicle

(two consecutive presses; one flash of the direction indicators).

D. Unlocking the load space (Light van) or of the hinged rear doors or tailgate only (Combi).

If a door is open or has not been closed properly, the failed locking is indicated by three flashes of the direction indicators.

⏭ 31

Opening/Closing windows using the remote control

Press button **B** for more than three seconds to start opening the windows. Hold the button down until the desired position is obtained, then release the button, the window stops.
Press button **C** for more than three seconds to start closing the windows. Hold the button down until the desired position is obtained, then release the button, the window stops.
These operations can also be carried out by by inserting and turning the key in the front door lock barrels.

⏭ 32

Opening the rear doors to 180°

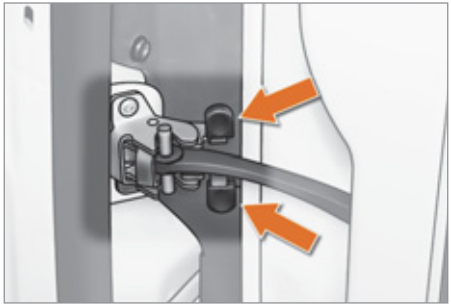

Press the catch while opening the side-hinged door.

⏭ 37

Fuel tank

1. Opening the fuel filler flap.

2. Opening and hooking the filler cap.

Capacity of the tank: approximately 45 litres.

⏭ 156

6 INTERIOR

Trip computer

Using the MENU button, this system allows you to see the setting of various vehicle configurations/information, such as deactivation of the passenger's airbag, automatic door locking, language, etc.

⏭ 68

Audio system

These systems benefit from the latest technology: MP3 compatible audio system and Bluetooth® hands-free kit with steering mounted controls.

⏭ 73

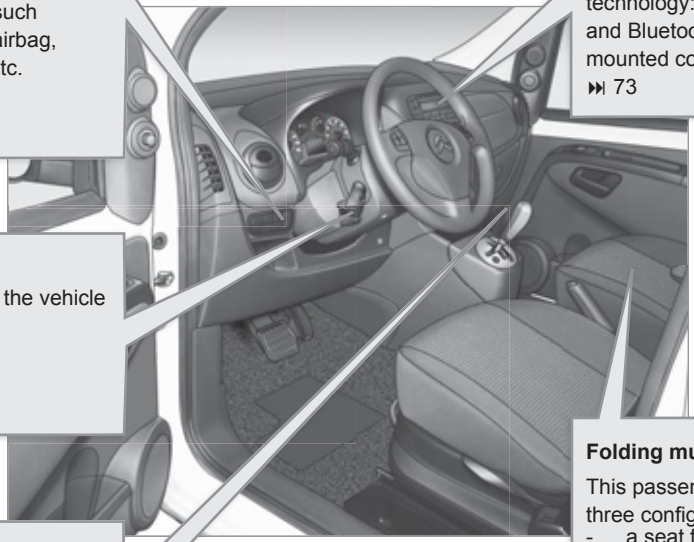

Cruise control

This system maintains the speed of the vehicle at the programmed value.

⏭ 44

Folding multifunction passenger seat

This passenger seat can be placed in one of three configurations:

- a seat for carrying a passenger,
- a table to accommodate your various documents...,
- folded for transporting long objects.

⏭ 97

Electronic gearbox

This system provides perfect driving by combining a fully automatic mode and a manual mode.

⏭ 50

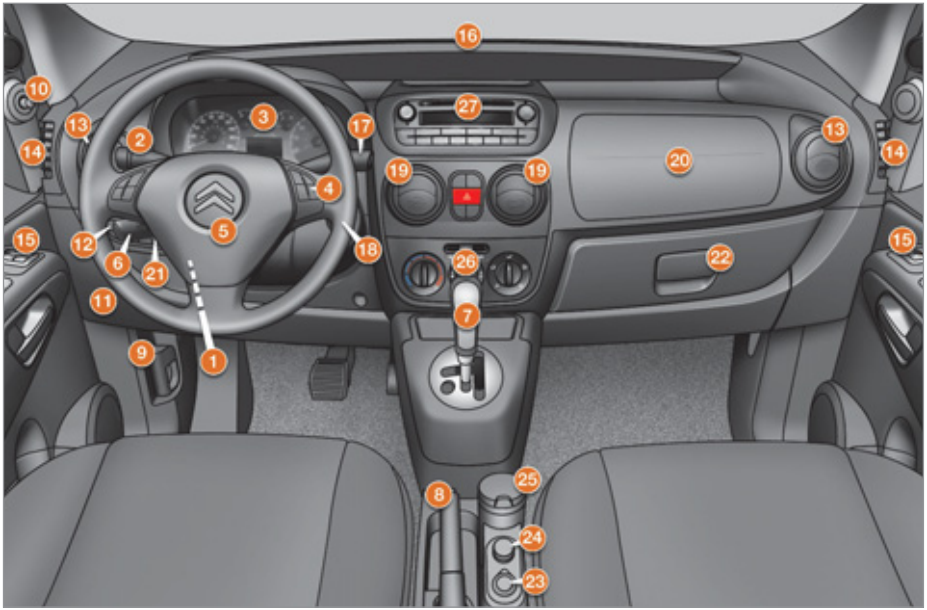

INSTRUMENTS AND CONTROLS

1. Steering wheel adjustment control.
2. Lighting and direction indicator control stalk.
3. Instrument panel.
4. Audio system steering mounted controls.
   Bluetooth hands-free system.
5. Driver's airbag.
   Horn.
6. Cruise control switches.
7. Gear lever.
8. Parking brake.
9. Bonnet release.
10. Door mirror controls.
11. Fusebox.
12. Manual headlamp height adjustment.
13. Side adjustable air vent.
14. Front side window demisting vent.
15. Electric window controls.
16. Windscreen demisting vent.
17. Wipers/screenwash/trip computer control stalk.
18. Steering lock and ignition.
19. Central adjustable air vents.
20. Passenger's airbag.
21. MENU button.
22. Glove box.
23. 12 V accessory socket.
24. Cigar lighter.
25. Ashtray.
26. Heating/air conditioning controls.
27. Audio system.

∞ LOAD SPACE (LIGHT VAN)

1. Stowing rings.
2. Storage tray.
3. Torch.
4. Partition.
5. Modular vertical grille.
6. Spare wheel.

It is advisable to immobilise the load by fixing it securely using the stowing rings **1** on the floor.

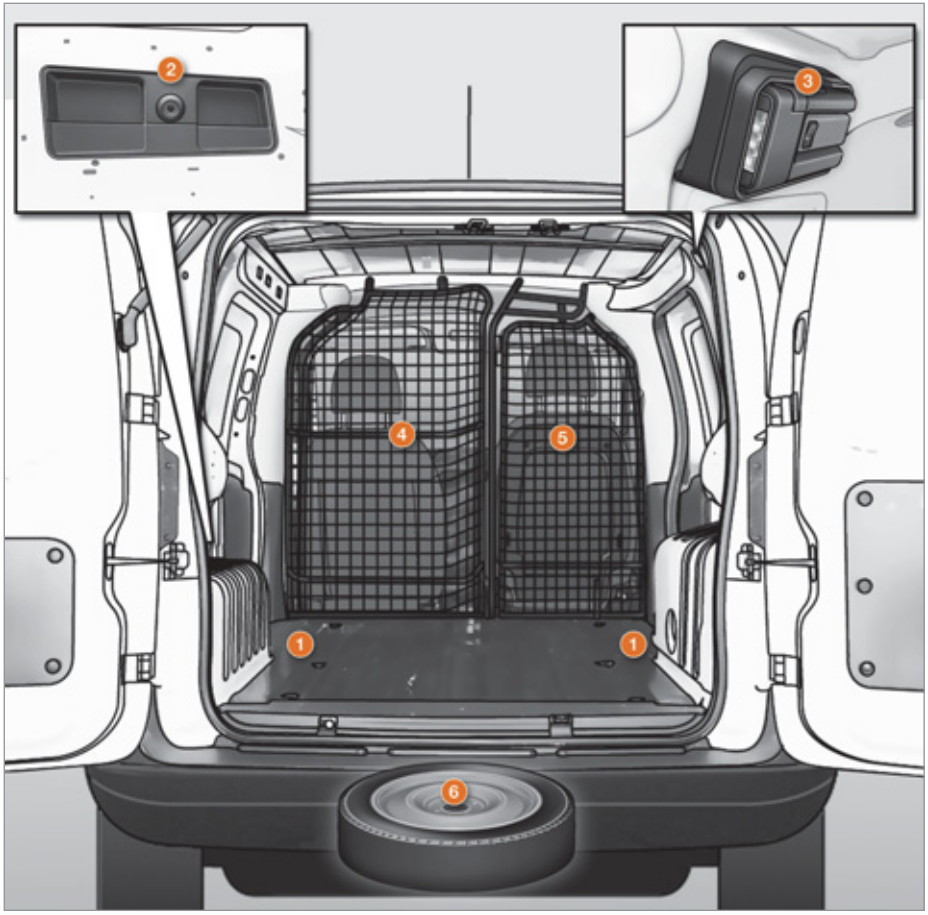

REAR FITTINGS (COMBI)

With side-hinged rear doors

1. Stowing rings.
2. Luggage retaining net.
3. Tool kit.
4. Rear parcel shelf.

With tailgate

1. Stowing rings.
2. Luggage retaining net.
3. Rear parcel shelf.
4. Retaining straps/Tool kit.
5. Torch/Boot lamp.

⏭ 110

10

SITTING COMFORTABLY

Driver's seat adjustment

Forwards-backwards

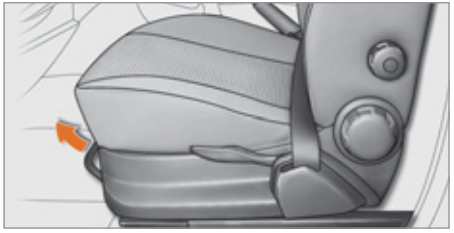

Height

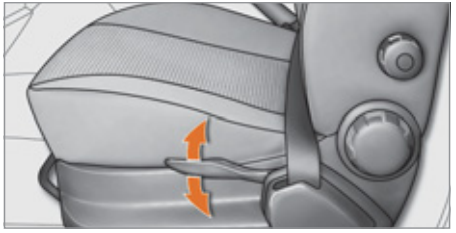

Seat back angle (A)

Lumbar support (B)

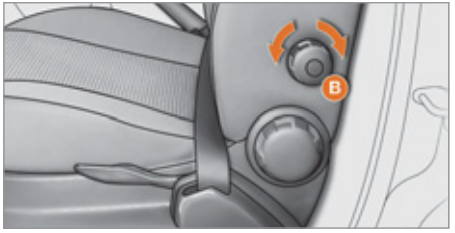

⏭ 95

SITTING COMFORTABLY

Steering wheel adjustment

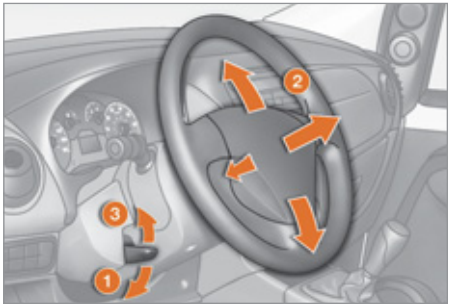

1. Release the adjustment mechanism.
2. Adjust for height and reach.
3. Lock the adjustment mechanism.

As a safety precaution, these operations must only be carried out while stationary.

⏭ 48

Electric door mirror adjustment

A. Selection of the driver's mirror.
B. Selection of the passenger's mirror.
C. Adjustment of the position of the mirror.
⏭ 46

Rear view mirror adjustment

1. Selection of the "day/night" position of the mirror.
2. Adjustment of the mirror.

⏭ 46

Front seat belts

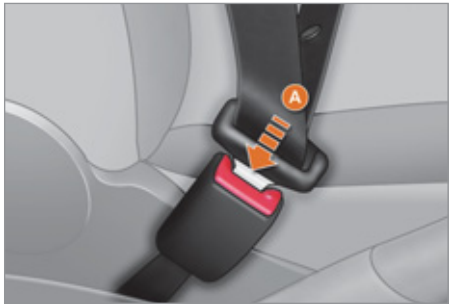

A. Fastening.

⏭ 118

SEEING CLEARLY

Lighting

Ring

Lighting off.

Sidelamps.

Dipped/main beam headlamps.

Foglamps

Rear foglamp.

or

Front and rear foglamps.

⏭ 41

Direction indicators

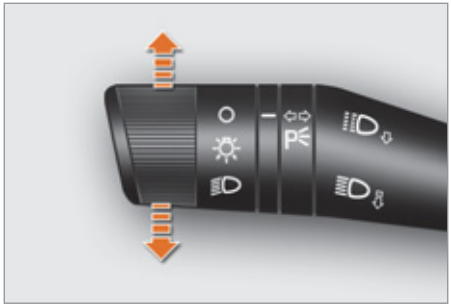

Raise or lower the lighting stalk passing the point of resistance; the corresponding direction indicators will flash until the lighting stalk is moved out of this position.

"Motorway" function

Press the lighting stalk up or down once, without passing the point of resistance; the corresponding direction indicators will flash three times.

⏭ 41

Wipers

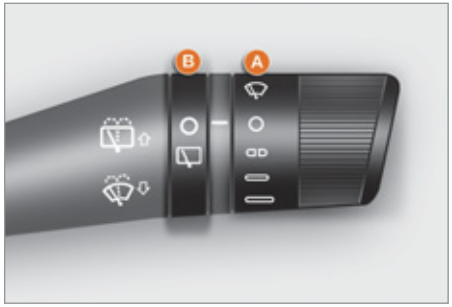

Ring A: windscreen wipers

Park.

Intermittent.

Slow continuous.

Rapid continuous.

Single wipe.

Screenwash.

⏭ 43

Ring B: rear wiper

Park.

Intermittent wipe.

Screenwash.

⏭ 43

VENTILATION

Recommended interior settings

I require...	Heating or Manual Air Conditioning				
	Air distribution	Air flow	Air recirculation/ Intake of outside air	Temperature	Manual A/C
HOT					—
COLD					
DEMISTING DEFROSTING					

MONITORING

Instrument panel

A. With the ignition on, the needle indicates the level of fuel remaining.

With the engine running, its associated warning lamp goes off. If it remains on, this indicates that you have reached the low level in the tank.

B. With the ignition on, the needle indicates the coolant temperature.

With the engine running, its associated warning lamp goes off.

C. With the ignition on, the oil level warning lamp does not remain on.

If the levels are not correct, top up the levels which are low.

⏭ 29

Warning lamps

1. With the ignition on, the orange and red warning lamps come on.

2. With the engine running, these warning lamps should go off.

If warning lamps remain on, refer to the section concerned.

⏭ 22

Switch panel

A. Intelligent traction control.

⏭ 117

or

Anti-slip regulation.

⏭ 115

B. Stop & Start.

⏭ 55

C. Hazard warning lamps.

⏭ 113

D. Rear screen and mirrors demisting.

⏭ 102

E. Locking/Unlocking the load space (Light van).

⏭ 39

PASSENGER SAFETY

Seat belt not fastened

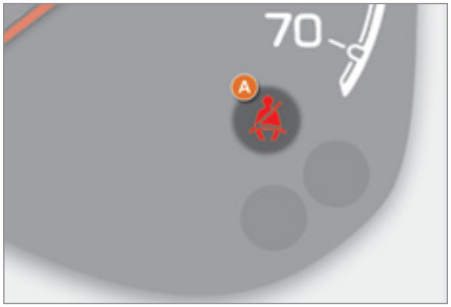

A. Driver's seat belt not fastened warning lamp.

⏭ 118

Passenger's front airbag

The passenger's front airbag is deactivated by means of the MENU button, located to the left of the steering wheel.

1. Press the MENU button.
2. Select "Bag" and confirm by pressing the MENU button.
3. Select "OFF" and confirm by pressing the MENU button.
4. Select "YES" and confirm by pressing the MENU button.

⏭ 122

Ladder type vertical partition (Light van)

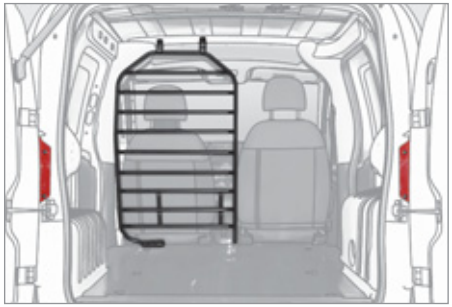

A ladder type vertical partition protects the driver against the risk of load movement.

⏭ 108

Electronic gearbox

This five-speed gearbox offers a choice between the comfort of fully automatic operation or the pleasure of manual gear changing.
N. neutral.
R. reverse.
M +/-. sequential mode.
A. automated mode.
E. economy programme.

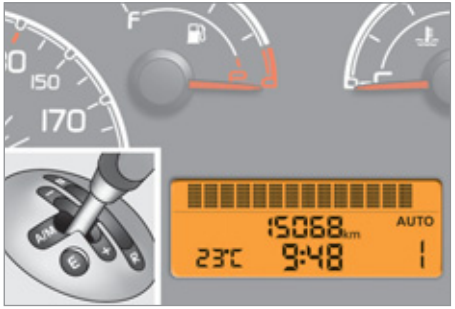

Display in the instrument panel

The gear and the driving mode selected appear in the instrument panel screen.
N: neutral.
R: reverse gear.
1 2 3 4 5: gears engaged.
AUTO: automatic mode.
E: economy programme.

Moving off

Select position **N** and press the brake pedal firmly while starting the engine.
Start the engine.
Select the manual or automated mode (move to the middle position, then long press to the left) or reverse (position **R**) using the gear lever.
Release the parking brake.
Release the brake pedal, then move off.

⏭ 50

DRIVING SAFELY

Stop & Start

Going into engine STOP mode

The **"S"** warning lamp comes on in the instrument panel and the engine goes into standby:

- **with a manual gearbox;** with the vehicle stationary, put the gear lever into neutral, then release the clutch pedal,
- **with an electronic gearbox;** with the vehicle stationary, maintain pressure on the brake pedal or put the gear lever in position **N**.

In certain circumstances, STOP mode may not be available; a message appears in the instrument panel screen, accompanied by the **"S"** warning lamp, which flashes for a few seconds then goes off.

Automatic stopping of the engine is only possible after a speed of about 6 mph (10 km/h) has been exceeded, to avoid repeated stopping of the engine when driving slowly.

⏭ 55

Going into engine START mode

The **"S"** warning lamp goes off and the engine restarts:

- **with a manual gearbox;** press the clutch pedal,
- **with an electronic gearbox;**
  - gear lever in position **A** or **M** , release the brake pedal,
  - or gear lever in position **N** and the brake pedal released, move the gear lever to position **A** or **M**,
  - or engage reverse.

In certain circumstances, START mode may be invoked automatically; a message appears in the instrument panel screen, accompanied by the **"S"** warning lamp, which flashes for a few seconds then goes off.

⏭ 56

Deactivation/Reactivation

You can deactivate the system at any time by pressing the **"S - OFF"** button; the warning lamp in the button comes on, accompanied by a message in the instrument panel screen. The system is automatically reactivated every time the engine is started with the key.

Before refuelling, before doing anything under the bonnet or before leaving the vehicle, you must switch off the ignition with the key.

⏭ 57

DRIVING SAFELY

Cruise control

1. Cruise control mode Selection/Off.
2. Decreasing of the programmed value.
3. Programming of a speed/Increasing of the programmed value.
4. Cruise control off/resume.

In order to be programmed or activated, the speed of the vehicle must be higher than 18 mph (30 km/h), with at least second gear engaged in the gearbox.

Display in the instrument panel

The cruise control mode appears in the instrument panel when selected.

Cruise control

⏭ 44

STARTING

Ignition switch

1. **STOP** position - Off.
2. **MAR** position - Ignition on.
3. **AVV** position - Start.

Avoid attaching heavy objects to the key which could weigh on the key when in the ignition switch; this could cause malfunctions.

⏭ 34

ECO-DRIVING

Eco-driving is a range of everyday practices that allow the motorist to optimise their fuel consumption and CO_2 emissions.

Optimise the use of your gearbox

With a manual gearbox, move off gently, change up without waiting and drive by changing up quite soon. If your vehicle has the system, the gear shift indicator invites you to change up; it is displayed in the instrument panel, follow its instructions.

With an automatic or electronic gearbox, stay in Drive **"D"** or Auto **"A"**, according to the type of gear selector, without pressing the accelerator pedal heavily or suddenly.

Drive smoothly

Maintain a safe distance between vehicles, use engine braking rather than the brake pedal, and press the accelerator progressively. These attitudes contribute towards a reduction in fuel consumption and CO_2 emissions and also helps reduce the background traffic noise.

When the traffic is flowing well, and if you have cruise control, make use of the system at speeds above 25 mph (40 km/h).

Control the use of your electrical equipment

Before moving off, if the passenger compartment is too warm, ventilate it by opening the windows and air vents before using the air conditioning.
Above 30 mph (50 km/h), close the windows and leave the air vents open.
Remember to make use of equipment that can help keep the temperature in the passenger compartment down (sun roof and window blinds...).
Switch off the air conditioning, unless it has automatic digital regulation, as soon as the desired temperature is attained.
Switch off the demisting and defrosting controls, if not automatic.
Switch off the heated seat as soon as possible.

Switch off the headlamps and front foglamps when the level of light does not require their use.

Avoid running the engine before moving off, particularly in winter; your vehicle will warm up much faster while driving.

As a passenger, if you avoid connecting your multimedia devices (film, music, video game...), you will contribute towards limiting the consumption of electrical energy, and so of fuel.
Disconnect your portable devices before leaving the vehicle.

Limit the causes of excess consumption

Spread loads throughout the vehicle; place the heaviest items in the bottom of the boot, as close as possible to the rear seats.
Limit the loads carried in the vehicle and reduce wind resistance (roof bars, roof rack, bicycle carrier, trailer...). Use a roof box in preference.
Remove roof bars and roof racks after use.

At the end of winter, remove snow tyres and refit your summer tyres.

Observe the recommendations on maintenance

Check the tyre pressures regularly, when cold, referring to the label in the door aperture, driver's side.
Carry out this check in particular:

- before a long journey,
- at each change of season,
- after a long period out of use.

Don't forget the spare wheel and the tyres on any trailer or caravan.

Have your vehicle serviced regularly (engine oil, oil filter, air filter...) and observe the schedule of operations recommended by the manufacturer.

When refuelling, do not continue after the 3rd cut-off of the nozzle to avoid any overflow.

At the wheel of your new vehicle, it is only after the first 1 800 miles (3 000 kilometres) that you will see the fuel consumption settle down to a consistent average.

Instrument panel with level 1 screen

Instrument panel with level 2 screen

INSTRUMENT PANELS

1. Distance recorder in miles/kilometres.
2. Screen.
3. Fuel gauge.
4. Coolant temperature.
5. Rev counter.

Instrument panel level 1 screen

- Time.
- Miles/Kilometres travelled.
- Trip computer/range, fuel consumption, average speed.
- Headlamp beam height.
- Programmable overspeed warning.
- Gear shift indicator.
- Stop & Start.
- Activating or deactivating the passenger's airbag.

Instrument panel level 2 screen

- Time.
- Date.
- Radio.
- Miles/Kilometres travelled.
- Ambient temperature.
- Modes and gear engaged on the electronic gear control gearbox.
- Trip computer/range, fuel consumption, average speed.
- Headlamp beam height.
- Programmable overspeed warning.
- Selection of the display language.
- Gear shift indicator.
- Stop & Start.
- Activating or deactivating the passenger's airbag.
- Activation or deactivation of automatic door locking on moving off.

WARNING LAMPS

Each time the engine is started: a series of warning lamps comes on applying a self-checking test. They go off almost immediately. When the engine is running: the warning lamp becomes a warning sign if it remains on continuously or flashes. This initial warning may be accompanied by an audible signal and a message in the screen. "Do not ignore these warnings."

Warning lamp		is	indicates	Solution - action
	Service	on temporarily.	minor faults.	Contact a CITROËN dealer or a qualified workshop.
		continuously on, accompanied by a message in the screen.	major faults.	Make a note of the warning message and contact a CITROËN dealer or qualified workshop.
	Parking brake Brake fluid level	on.	that the parking brake is applied or has not been released correctly.	Releasing the parking brake switches off the warning lamp.
		on.	that the fluid level is too low.	Top up using a fluid recommended by CITROËN dealers.
		continuously on, even though the level is correct.		**Stop as soon as it is safe to do so, park, switch off the ignition and contact a CITROËN dealer or qualified workshop.**
	Low engine oil level	on.	that the level of oil in the engine is too low.	Check the engine oil level and contact a CITROËN or a qualified workshop.
		continuously on, even though the level is correct.		**Stop as soon as it is safe to do so, park, switch off the ignition and contact a CITROËN or a qualified workshop.**
	Coolant temperature	on with the needle in the red zone.	an abnormal increase.	Park and switch off the ignition, allow the system to cool. Visually check the level.
		on H in the red zone.	an abnormal increase in the coolant temperature.	Refer to the "Levels" section of chapter 7. Contact a CITROËN or a qualified workshop.

Warning lamp		is	indicates	Solution - action
	Engine oil	on while driving, with a message in the screen.	that the engine oil pressure is too low.	Park and switch off the ignition and contact a CITROËN dealer or a qualified workshop.
		flashing, with a message in the screen (1.3 HDi 75 only).	degraded engine oil.	Have the vehicle services as soon as possible to avoid damage to the engine.
	Battery charge	on.	a fault in the charging circuit.	Check the battery terminals… Refer to the "Battery" section of chapter 7.
		continuously on, in spite of the checks.	a circuit fault, an ignition or injection fault.	Contact a CITROËN dealer or a qualified workshop.
	Door open detection	on.	that a door is not closed correctly.	Check that the front, rear and side doors are closed.
		accompanied by a message in the screen.		
	Seat belt not fastened	on then flashes.	that the driver has not fastened his seat belt.	Pull the strap then insert the tongue in the buckle.
		accompanied by an audible signal then remains on.	that the vehicle is moving with the driver's seat belt unfastened.	Check that the seat belt is fastened correctly by pulling the strap. Refer to the "Seat belts" section of chapter 5.
		flashing, accompanied by an audible signal.	the front passenger has not fastened their seat belt.	Pull on the strap and insert the tongue in the buckle.

Warning lamp		is	indicates	Solution - action
	Front airbag Side airbag	flashing or continuously on.	the failure of an airbag.	Have the system checked by a CITROËN dealer or a qualified workshop without delay. Refer to the "Airbags" section of chapter 5.
	Deactivation of the passenger's front airbag	on.	that this airbag has been deactivated intentionally in the presence of a rear facing child seat.	Configure via the trip computer MENU menu. Refer to the "Menu" section of chapter 3.
ABS	ABS	continuously on.	failure of the system.	The vehicle retains conventional braking without assistance. However, you are advised to stop and contact a CITROËN dealer or a qualified workshop.
		continuously on, coupled with the parking brake warning lamp.	a fault with the electronic brake force distributor.	**Stop as soon as it is safe to do so, park, switch off and contact a dealer CITROËN or a qualified workshop.**
	Trajectory control system	flashes for a few seconds.	the ESP system has been invoked.	Intervention by the system to correct the trajectory of the vehicle.
		on, coupled with the warning lamp in the **"ASR OFF"** button and accompanied by a message in the screen.	a fault with the ESP system.	Contact a CITROËN dealer or a qualified workshop.
		on, accompanied by a message in the screen.	a fault with the ASR/MSR system.	Contact a CITROËN dealer or a qualified workshop.
		on.	a fault with the Intelligent Traction Control.	Contact a CITROËN dealer or a qualified workshop.
	Hill start assist	on.	a fault with the hill start assist system.	Contact a CITROËN dealer or a qualified workshop.
	Front brake pads	on.	brake pad wear.	Have the pads replaced by a CITROËN dealer or a qualified workshop.

Warning lamp		is	indicates	Solution - action
	Electronic anti-theft	on.	the ignition key introduced is not recognised. Starting impossible.	Use another key and have the faulty key checked by a CITROËN dealer. Chapter 1, "Access".
	Emissions control system	flashing or on continuously.	a fault with the system.	Have it checked as soon as possible by a CITROËN dealer or a qualified workshop.
	Low fuel level	on with the gauge needle in zone E.	that the fuel reserve is being used.	Refuel without delay. The assessment of the fuel reserve is sensitive to the style of driving, the profile of the road, the time elapsed and the distance travelled since the warning lamp first came on.
	Particle emissions filter	on, accompanied by an audible signal and a message in the screen.	the start of saturation of the particle emissions filter.	Carry out a regeneration of the filter as soon as possible. Chapter 7, "Checks".
	Presence of water in the Diesel filter	on, accompanied by a message in the screen.	water in the Diesel fuel filter.	Have the filter bled by a CITROËN dealer or a qualified workshop. Chapter 7, "Checks".
	Diesel pre-heating	on.	that the weather conditions impose pre-heating (up to around 30 seconds in extreme climatic conditions).	Wait for the warning lamp to switch off before operating the starter. If the engine does not start, switch the ignition off and on again, wait for the warning lamp to go off, and start the engine.

Warning lamp		is	indicates	Solution - action
	Sidelamp	on.	a manual selection.	Turn the ring on the lighting control stalk to the first position.
	Dipped beam headlamp	on.	a manual selection.	Turn the ring on the lighting control stalk to the first position.
	Main beam headlamp		a pull on the control stalk.	Pull the lighting control stalk to return to dipped beam.
	Direction indicators	flashing with an audible signal.	a change of direction using the lighting control stalk, to the left of the steering wheel.	To the Right: press the stalk upwards. To the Left: press the stalk downwards.
	Hazard warning lamps	flashing with an audible signal.	the hazard warning lamp switch, located in the middle of the dashboard, has been pressed.	The left and right direction indicators, and the associated warning lamps, flash simultaneously.
	Front foglamps	on.	that the button on the dashboard has been pressed.	Manual selection. The foglamps only operate if the sidelamps or dipped beam headlamps are on.
	Rear foglamps	on.	that the button on the dashboard has been pressed.	Manual selection. The foglamps only operate if the dipped beam headlamps are on. When visibility is normal, please switch the foglamps off to avoid breaking the law. This lamp is a bright dazzling red.

Warning lamp		is	indicates	Solution - action
	Cruise control	on.	activation of the cruise control.	Manual selection. Chapter 1, "Steering mounted controls"
	Rear parking sensors	on, accompanied by a message in the screen.	a fault with the system.	The audible system is not active. Have it checked as soon as possible by a CITROËN dealer or a qualified workshop.
	Electronic gearbox	on, accompanied by a message in the screen.	incorrect operation by the driver.	Start the desired operation again.
		flashing, accompanied by an audible signal and a message in the screen.	a fault with the gearbox.	Have it checked as soon as possible by a CITROËN dealer or a qualified workshop.

Display		displays	indicates	Solution - action
	Stop & Start	on.	engine STOP mode invoked following a stop of the vehicle.	As soon as you want to move off, the warning lamp goes off and the engine starts automatically in START mode.
		flashes for a few seconds then goes off.	temporary unavailability of STOP mode or START mode invoked automatically.	particular cases with STOP mode and START mode. Chapter 1, "Steering mounted controls".
SHIFT	Gear shift indicator	the arrow pointing up.	the possibility to change up.	Chapter 1, "Gear shift indicator".
		the arrow pointing down.	the possibility to change down.	
-88°8	Ambient temperature (°C/°F)	the temperature which flashes accompanied by a message in the screen.	weather conditions which could result in the presence of ice on the road.	Be especially vigilant and do not brake sharply. Chapter 5, "Driving safety".
888888 88:88	Date (YYYY/MM/DD) Time (HH:MM)	a setting: of the Date. of the Time.	a configuration via the MENU menu.	Chapter 3, "Menu".
	Headlamp beam height	a headlamp height setting.	a position from 0 to 3 depending on the load carried.	Adjust using the control on the dashboard. Chapter 1, "Steering mounted controls".

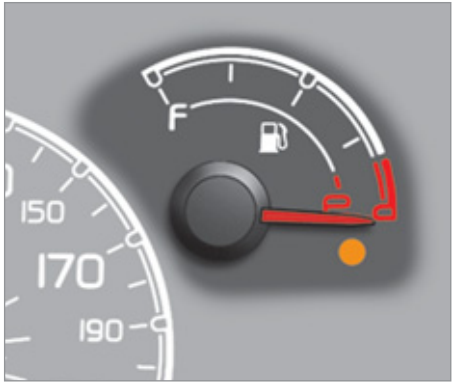

FUEL GAUGE

The fuel level is tested each time the key is turned to the "ignition on" position.
The gauge is positioned on:

- **F (full):** the capacity of the fuel tank is approximately **45 litres**.
- **E (empty):** the reserve is now being used, the warning lamp comes on continuously.

The reserve when the warning first comes on is approximately 6 litres.

Refer to the "Levels" section of chapter 7.

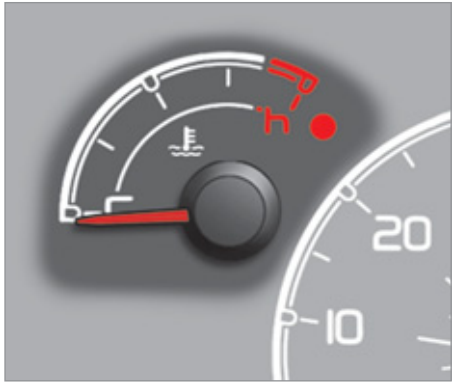

COOLANT TEMPERATURE

The needle is positioned between C (cold) and H (hot): normal operation.
In arduous conditions of use or hot climatic conditions, the needle may move close to the red graduations.

What you should do if the needle enters the red zone, or if the warning lamp comes on:

- stop immediately, switch off the ignition. The cooling fan may continue to operate for a certain time up to approximately 10 minutes.
- wait approximately 15 minutes to allow the engine to cool down in order to check the level and top it up if necessary. The cooling system is pressurised. In order to avoid any risk of scalding, unscrew the cap by two turns to allow the pressure to drop.

When the pressure has dropped, check the level and remove the cap to top up.
If the needle remains in the red zone, contact a CITROËN or a qualified workshop.

Refer to the "Levels" section of chapter 7.

EMISSION CONTROL

EOBD (European On Board Diagnosis) is a diagnostics system which meets the exhaust emissions standards for:

- CO (carbon monoxide),
- HC (unburnt hydrocarbons),
- NOx (nitrous oxides) or particles detected by oxygen sensors placed upstream and downstream of the catalytic converters.

The driver is warned of any fault with this emission control system by flashing of this specific warning lamp in the instrument panel.

SERVICE INDICATOR

The screen in the instrument panel informs you when the next service is due, in accordance with the Manufacturer's servicing schedule indicated in the servicing booklet. This information is determined in relation to the distance travelled since the previous service.

Refer to the list of checks in the servicing booklet which was given to you on delivery of the vehicle.

After a few seconds, the screen returns to its usual functions.

ENGINE OIL WARNING LAMP

Low engine oil pressure

The warning lamp comes on continuously, accompanied by a message in the instrument panel screen, when the system detects that the oil pressure is too low.

Stop as soon as it is safe to do so: park, switch off the ignition and contact a qualified workshop CITROËN dealer or a.

Oil deterioration (1.3 HDi 75 hp engine only)

The warning lamp flashes, accompanied by a message in the instrument panel screen, when the system detects deterioration of the engine oil. The flashing of this warning lamp should not be considered as a fault wit the vehicle, but rather as an indication to the driver that the normal use of the vehicle now requires that the oil be changed.

If the oil is not changed, when a second level of deterioration is reached, the emissions warning lamp comes on in the instrument panel and the engine speed is restricted to 3 000 rpm. If the oil is still not changed, when a third level of deterioration is reached, the engine speed is restricted to 1 500 rpm, so as to avoid any damage.

To avoid damaging the engine, it is recommended that the oil be changed on flashing of the engine oil warning lamp.

LIGHTING DIMMER

The dimmer is active when the sidelamps are on.

Use these controls to adjust the brightness of the instrument panel and the radio panel lighting.

REMOTE CONTROL

Unlocking of the vehicle

Press this button to unlock the front doors only (Light van) or all of the doors (Combi).

Unlocking is confirmed by two flashes of the direction indicators.

Unlocking the hinged rear doors or the tailgate

Press this button to unlock the load space (Light van) or the hinged rear doors or the tailgate only (Combi).

Central locking

Press this button briefly to lock all of your vehicle's doors. Locking is confirmed by a flash of the direction indicators.

If one of the doors is open or is not closed correctly, the central locking will not work. In this case, the failed locking is indicated by three flashes of the direction indicators.

Deadlocking

Press this button twice to change locking to deadlocking.
Deadlocking renders the exterior and interior door opening handles inoperative. Do not leave anyone inside the vehicle when it is deadlocked. Deadlocking is confirmed by a flash of the direction indicators.

The deadlocking is deactivated:

- by carrying out the door opening operation,
- by turning the ignition key to the **RUNNING** position.

Folding/unfolding the key

Press this button to release the key from its housing.
To fold the key, press the button then fold the key into the housing.

If you do not press the button, the mechanism may be damaged.

Opening the windows with the remote control

Pressing and holding this button for more than 3 seconds starts opening of the windows. Release the button once the windows are in the desired position. The windows stop as soon as you release the button.

This opening operation can also be carried out by inserting and turning the key in the front door lock barrel.

Closing the windows using the remote control

Pressing and holding this button for more than 3 seconds starts closing of the windows. Release the button once the windows are in the desired position. The windows stop as soon as you release the button.

This closing operation can also be carried out by inserting and turning the key in the front door lock barrel.

When closing the windows using the remote control you must ensure that nothing prevents their correct closing. The anti-pinch function does not operate when closing the windows this way.
If you want to leave the windows partly open, it is necessary to deactivate the volumetric alarm monitoring.

KEY

This locks and unlocks the doors on the vehicle, opens and closes the fuel filler cap, as well as starting and stopping the engine.

REMOTE CONTROL BATTERY

Reference: CR2032/3 volts.

Changing the remote control battery

- press the button to eject the key,
- turn the screw **1** from the closed padlock to the open padlock using a screwdriver with a thin tip,
- use the screwdriver as a lever to extract the battery holder housing **2**,
- remove the housing and change the battery **3** observing the polarities,
- put the battery holder housing **2** back inside the key and secure it by turning the screw **1**.

There is a risk of damage if the replacement battery does not conform. Only use batteries which are identical or of an equivalent type to those recommended by a CITROËN dealer. Take used batteries to an approved collection point.

CONFIDENTIAL CARD

This is given to you on delivery of your vehicle with the duplicate keys.
It contains the identification code necessary for any work carried out by a CITROËN dealer on the electronic immobiliser system.
This code is hidden by a film, which should be removed only if necessary.
Keep your card in a safe place, never inside the vehicle.
When undertaking a long trip or journey, however, it is advisable to take it with you along with your personal papers.

ELECTRONIC IMMOBILISER

All of the keys contain an electronic immobiliser device.
This device locks the engine supply system.
It is activated automatically when the key is removed from the ignition.
After the ignition is switched on, a dialogue is established between the key and the electronic immobiliser system.

This warning lamp is switched off after the ignition is switched on and the key has been recognised, the engine can be started.
If the key is not recognised, the engine cannot be started. Use another key and have the faulty key checked by a CITROËN dealer.

Good practice

Do not make any modifications to the electronic immobiliser system.
Operating the remote control, even when it is in your pocket, may result in involuntary unlocking of the doors.
The simultaneous use of other high frequency equipment (mobile telephones, domestic alarms…), may interfere with the operation of the remote control temporarily.

When purchasing a second-hand vehicle:

- ensure that you are given the confidential card,
- have the keys memorised by a CITROËN dealer to ensure that the keys in your possession are the only ones which can start the vehicle.

Driving with the doors locked may make access to the passenger compartment by the emergency services more difficult in an emergency.
As a safety precaution (with children on board), remove the key from the ignition when leaving the vehicle, even for a short time.

ALARM

This provides:

- exterior perimeter protection by means of detectors on the doors and bonnet and on the electrical supply,
- interior protection,
- anti-tilt protection,
- protection against the unauthorised insertion of a key in the starter.

The equipment includes a siren.

Activation of the alarm

First ensure that all of the accesses are closed correctly.

The alarm is activated by pressing this control, the protection is active after a few seconds.

While the alarm is monitoring, any intrusion triggers the siren for approximately 30 seconds, accompanied by illumination of the direction indicators.

The alarm then returns to monitoring mode.

The alarm is also triggered following an electrical supply cut-off, when the supply is restored.

Signalling of attempted intrusion

When you return to your vehicle, flashing of the electronic engine immobiliser warning lamp or the appearance of a warning message in the instrument panel display indicates an attempted intrusion during your absence.

Deactivation using the remote control

When this button is pressed, the alarm is deactivated when the vehicle is unlocked.

Deactivation using the key

Unlock the doors using the key and enter the vehicle. Switch on the ignition to the **RUNNING** position, identification of the key code will switch off the alarm.

Deactivation of the volumetric and anti-tilt protection

To deactivate the volumetric and anti-tilt protection, press the button located in the vehicle's courtesy lamp. To be effective, this operation must be repeated every time the ignition is switched off.

Good practice

To quickly deactivate the siren following unwanted triggering, unlock the vehicle using the remote control.

To avoid setting the alarm, before washing the vehicle for example, lock the vehicle using the key.

OPENING FROM THE OUTSIDE

Driver's door

Use the remote control to unlock from the outside.
Pull the handle towards you.
If the remote control does not work, insert the metal part of the key in the lock on the driver's side.

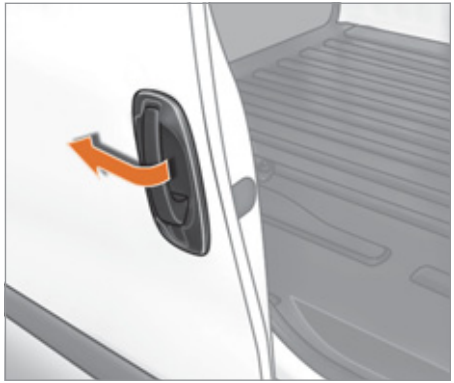

Sliding side door

Pull the handle towards you then towards the rear.
Slide the door fully to pass the point of resistance (Light van) or to engage the latch which holds the door in the open position (Combi).

When the fuel filler flap is open, a safety system checks the sliding of the side door (Combi).

If your vehicle is parked on a slope, guide the side door as it slides. The door could open or close more quickly due to the incline of the ground, risking injury. As a safety precaution and to guarantee correct operation, do not drive with the sliding side door open.

Tailgate (Combi)

After unlocking the vehicle using the remote control or the key, pull the central handle and lift the tailgate.

Side-hinged rear doors

The 60/40 type asymmetrical hinged rear doors have four closing points, including a central closing point.
Pull the handle towards you.
Start by opening the large hinged door, then unlock by pulling the lever to release and open the small hinged door.
The two hinged doors open to 90°.
Driving with the small hinged door open is permitted to make the transportation of long loads easier. Observe the customary safety indications, to attract the attention of other drivers.

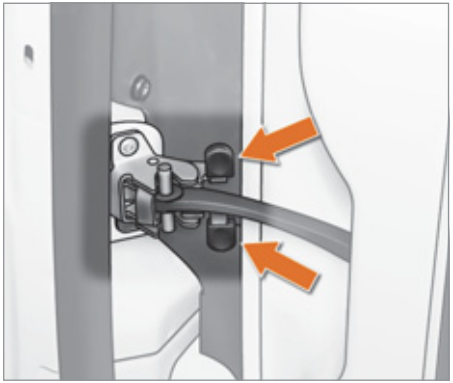

Opening to 180°

Press the catch while opening the door.

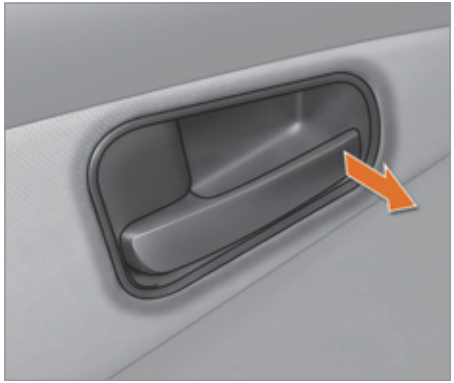

OPENING FROM THE INSIDE

Driver's door

Pull the interior handle to unlock.
Active locking: when the vehicle speed approaches 12 mph (20 km/h), a characteristic locking noise indicates that your vehicle has been locked automatically.
This "AUTOCLOSE" function is activated or deactivated via the "MENU".
This function is deactivated when the vehicle is delivered.

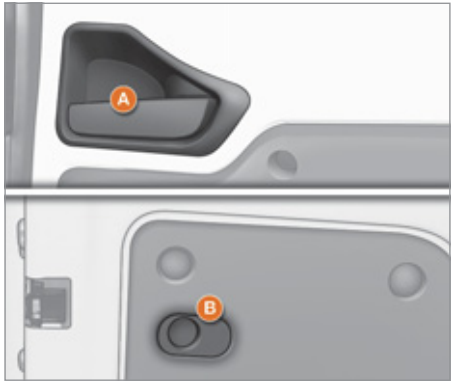

Sliding side door (Combi)

Pull the handle **A** towards the rear, slide the door fully to engage the latch which holds the door in the open position (Combi).

If your vehicle is parked on a slope, guide the side door as it slides. The door could open or close more quickly due to the incline of the ground, risking injury. As a safety precaution and to guarantee correct operation, do not drive with the sliding side door open.

Side-hinged rear doors

To open, slide the control **B** to the right.

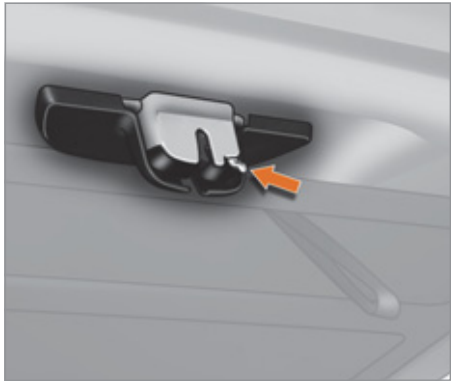

Good practice

When opening, take care not to obstruct the guide space on the floor to allow the door to slide correctly.
Do not block traffic.

Tailgate (Combi)

In the event of a battery or central locking fault, the tailgate can be released mechanically from inside the boot.
Open the sliding side door and fold the rear seats fully.
From inside the boot, press the lever to release the tailgate.

Load space

Press once to unlock the sliding side doors and the rear doors (Light van) from the driving position.

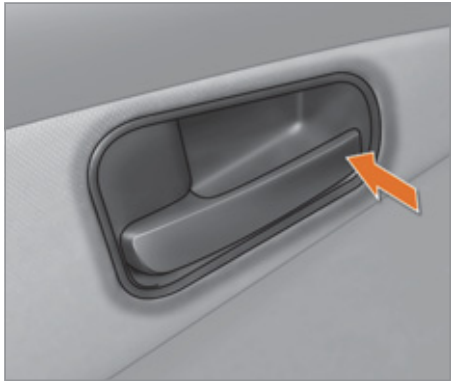

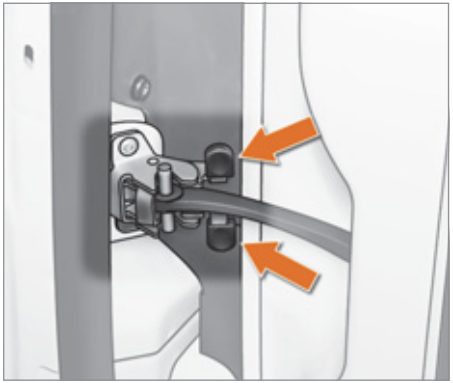

CLOSING FROM INSIDE

Central locking

Push the interior handle to lock the entire vehicle or the door concerned. However, if one of the doors is open or is not closed correctly, the central locking does not work.

Always remove the key from the ignition when leaving the vehicle, even for a short time.

Closing from 180°

The check strap will re-attach automatically when the hinged doors are closed, the small door being closed first.

Load space

Press to lock the sliding side doors and the rear doors (Light van) from the driving position.

Protection against attack

When the vehicle is started, the system locks the driving position and load space doors automatically when you reach approximately 12 mph (20 km/h).
This "AUTOCLOSE" function is activated or deactivated via the "MENU".
If none of the doors are opened during the journey, the locking remains active.
This function is deactivated when the vehicle is delivered.

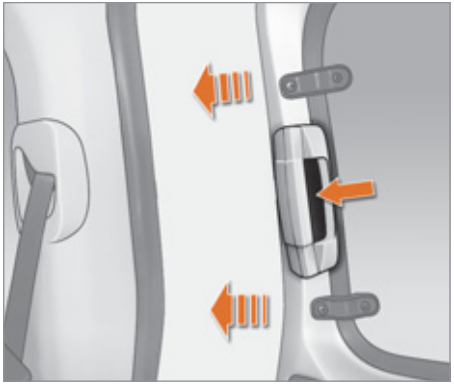

Sliding side door (Combi)

Press the control to release the door and pull the handle towards you to close the door.

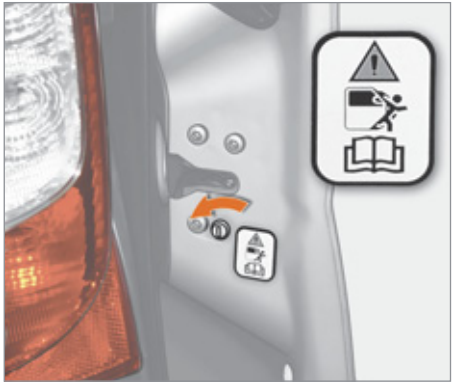

Child safety

This prevents either of the rear doors being opened from inside.

☞ Turn the switch on each rear door a quarter of a turn using the ignition key.

CLOSING FROM THE OUTSIDE

Sliding side door

Pull the handle towards you then towards the front to pass the point of resistance (Light van) or to release the door retaining device (Combi).
Slide the door fully until it is closed.

Hinged rear doors

Start by closing the small hinged door, this is secured automatically when closed.
Close the large door using its handle.

Tailgate (Combi)

Lower the tailgate using the interior grab handle.

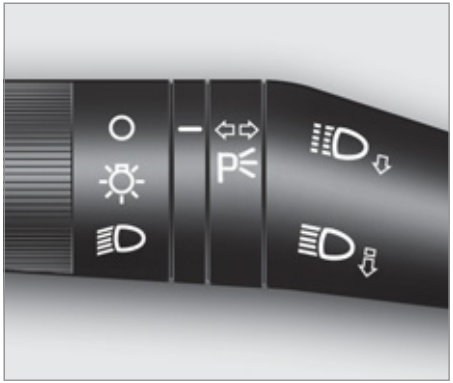

LIGHTING STALK

Selection is by rotation of the white mark on the ring, when the ignition key is in the **RUNNING** position.

All lamps off

Sidelamps on

This is indicated on the instrument panel by lighting of the warning lamp.

Dipped headlamps/main beam headlamps on

Turn the ring into position.

Dipped headlamps/main beam headlamps change

Pull the lighting stalk fully towards you.

Headlamp flash

Pull the lighting stalk towards you gently, regardless of the position of the ring.

Direction indicators

Left: push downwards. The green direction arrow warning lamp flashes on the instrument panel.
Right: push upwards. The green direction arrow warning lamp flashes on the instrument panel.

"Motorway" function

System which indicates a change of lane on high-speed roads.
Press the lighting stalk up or down once, without passing the point of resistance; the corresponding direction indicators will flash three times.

Parking lamps

Side markers for the vehicle by illumination of the sidelamps on the traffic side only.
Ignition key in the **STOP** position or removed from the ignition switch:

- ☞ turn the ring to the "Lighting off" position, then to the "Sidelamps" position,
- ☞ operate the lighting control stalk up or down depending on the traffic side (for example: when parking on the left; lighting control stalk upwards; the right hand sidelamps are on).

This is confirmed by illumination of the sidelamps warning lamp in the instrument panel.
To switch off the parking lamps, return the lighting control stalk to the middle position and the ring to the "Lighting off" position.

Fog lamps

The controls are located on the fascia panel control pad.

Front and rear fog lamps

The front fog lamps operate with the side lights and the dipped headlamps.

The rear fog lamps operate with the dipped headlamps.

Press one of these controls to switch on the lights.

The fog lamps should only be used in fog or when snow is falling.
In clear weather or in rain, both day and night, lit rear fog lamps dazzle and are prohibited.
Do not forget to switch them off when they are no longer necessary.

Guide-me-home lighting

The temporary maintaining of the dipped headlamps, after switching off the vehicle's ignition, makes the driver's exit easier when the light is poor and lights the space in front of the vehicle.

Activation

With the ignition key in the **STOP** position or removed, pull the lighting stalk towards the steering wheel within 2 minutes after switching off the engine.
Each time the control is operated, the duration for which the lamps will remain on is extended by 30 seconds, up to a maximum of 210 seconds. Once this period of time has elapsed, the lamps switch off automatically.

The warning lamp comes on, accompanied by a message on the display, the first time the control is operated and remains on until the function is deactivated automatically.

Deactivation

Pull the lighting stalk towards the steering wheel for more than 2 seconds.

Headlamp beam

You are advised to adjust the height of the headlamp beams in accordance with the load in your vehicle.
This function can only be accessed in the main beam headlamps and dipped headlamps position.

Press these controls, located on the fascia panel, several times in succession to adjust the headlamps.

An indicator light on the display indicates the adjustment position selected (0, 1, 2, 3).

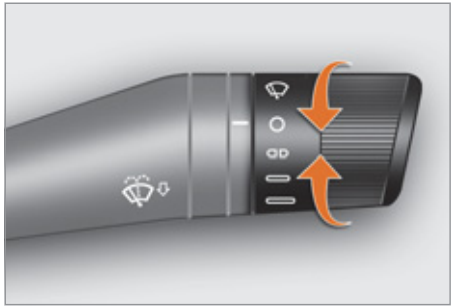

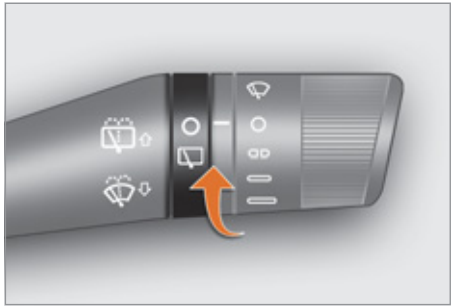

WIPERS STALK

Windscreen wipers

Wiping is only active when the ignition key is in the **RUNNING** position.
The stalk may have four different positions.
Three speeds can be selected by turning the ring.

Intermittent.

Slow continuous.

Fast continuous.

Single wipe: by pushing up.

With Stop & Start, when the wiper control stalk is in the fast wipe position, the STOP mode is not available.

Windscreen wash

Push the stalk down, the windscreen wash alone is activated.
Hold the stalk down, the windscreen wash is accompanied by a timed sweep of the wipers.

To top up the levels, refer to the "Levels" section of chapter 7.

Good practice

Check that the windscreen wiper blades can operate freely when using the wipers in icy weather.

To change the blades, refer to the "Changing a wiper blade" section of chapter 7.

Rear wiper

This is positioned on the window of the large rear door.
Turn the ring.

Rear screen wash

The rear screen wash is incorporated next to the third brake light.
Push the stalk up, the rear screen wash alone is activated.
Hold the stalk up, the rear screen wash is accompanied by a timed sweep of the wiper.

CRUISE CONTROL

"This is the speed at which the driver wishes to drive".
This aid to driving in free-flowing traffic enables the vehicle to maintain the speed programmed by the driver, without use of the accelerator pedal.

In order for it to be programmed or activated, the vehicle speed must be greater than 18 mph (30 km/h) with at least second gear engaged on the manual gearbox.

When the system is activated, The "Cruise control" warning lamp comes on in the instrument panel:

Selecting the function

- Place the ring in the **ON** position. The cruise control is selected but is not yet active and no speed has been programmed.

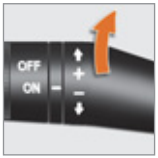

First activation/ Programming a speed

- Reach the chosen speed by pressing the accelerator.

- Move the control up (+) for at least one second then release it.

This programmes the reference speed. You can release the accelerator pedal, and the vehicle will maintain this speed.

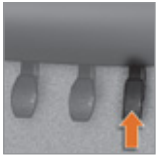

Temporarily exceeding of the speed

It is possible to **accelerate** and drive momentarily at a speed greater than the programmed speed (for example to overtake another vehicle).
When the accelerator pedal is released, the vehicle will return to the programmed speed.

Deactivation

- Press the button on the end of the control.

or

- Press the brake or clutch pedal.

The cruise control is also deactivated if the ABS or ESP system is invoked.

Reactivation

- Press the button on the end of the control again.

or

- Press the accelerator pedal until a speed close to the programmed speed.

- Engage the gear selected when programming the speed.

Your vehicle will return to the last programmed speed.

Changing the programmed speed

There are two methods of memorising a speed higher than the previous one:

Without using the accelerator:
- move the control up (+).

Each brief press increases the speed by 1 mph (km/h).

A maintained press increases the speed gradually.

Using the accelerator:
- exceed the memorised speed until the speed required is reached,
- move the control up (+) for at least one second, then release it.

To memorise a speed lower than the previous one:
- move the control down (-); the new speed will be memorised automatically.

A brief press decreases the speed by 1 mph (km/h).
A maintained press decreases the speed gradually.

Switching the function off

- Place the ring in the **OFF** position or switch off the ignition to switch everything off.

Cancelling the programmed speed

When the vehicle becomes stationary, after switching off the ignition, the system no longer memorises a speed.

Operating fault

If the system does not operate correctly, turn the ring to the OFF position and contact a CITROËN dealer or a qualified workshop.

Good practice

When changing the programmed speed by means of a maintained press, pay attention as the speed can increase or decrease rapidly.
Do not use the cruise control on slippery roads or in heavy traffic.
Never engage neutral while the system is operating.
In the event of a steep slope, the cruise control cannot prevent the vehicle from exceeding the programmed speed.
In any event, the cruise control cannot replace the need to observe the speed limits, nor can it replace the need for vigilance and responsibility on the part of the driver.
It is advisable to leave your feet near the pedals.
To avoid any jamming under the pedals:
- ensure that the mat and its fixings on the floor are positioned correctly,
- never place one mat on top of another.

FIXED SPEED LIMITER

This function allows a fixed maximum speed limit to be set for the vehicle (according to version and only on the 1.3 HDi 75 hp engine).
The maximum speed can be set to one of 4 pre-defined values: 56, 62, 68 or 80 mph (90, 100, 110 or 130 km/h).

A label in the passenger compartment indicates the presence of this function and its setting.
This function cannot be deactivated or set by the driver.

MIRRORS AND WINDOWS

Rear view mirror

The lever located on the lower edge moves the mirror into two positions.
For the day position, the lever is pushed forwards.
For the night position to prevent dazzle, pull the lever towards you.

Door mirrors

The mirror glass is convex in order to widen the lateral field of vision. Objects seen in the mirror are in reality closer than they appear. Therefore, this must be taken into account in order to assess the distance correctly.

Electric controls

The electric control is located on the left hand side, level with the mirror.

Select the mirror to be adjusted by turning the control to the right or to the left, then move the control in the direction of the adjustment required.

To defrost the mirrors, press the heated rear screen button.

Manual controls

The right-hand and left-hand manual controls are located inside the vehicle at the base of each mirror.
Move the lever in the direction of the adjustment required.

ELECTRIC WINDOWS

Electric controls

The electric windows have a safety anti-pinch function and are associated with one-touch controls for lowering and raising.
From the driver's seat, the controls placed on the door operate the vehicle's front windows.
On the passenger's side, the control operates the passenger's front window.

One-touch controls

An extended press on the control raises or lowers the window completely.
Press the control again to stop the window.
Press the control briefly to start the movement of the window.

Manual controls

Turn the window winder located on the door trim panel.

Good practice

Always remove the key from the ignition when leaving the vehicle, even for a short time.
If the electric window meets an obstacle during operation, you must reverse the movement of the window. To do this, press the control concerned.
When the driver operates the passenger electric window controls, they must ensure that no one is preventing correct closing of the windows.
The driver must ensure that the passenger uses the electric window correctly.
Be aware of children when operating the windows.

REAR WINDOWS (COMBI)

To partially open the rear windows, tilt the lever and push it fully to lock the windows in the open position.

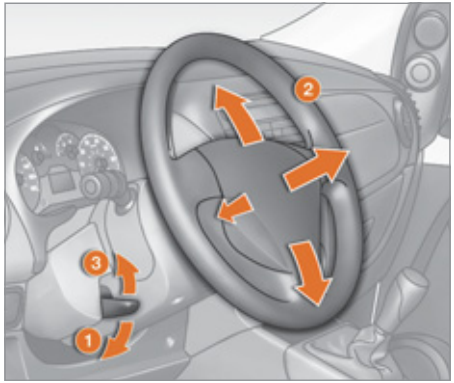

STEERING WHEEL ADJUSTMENT

When the vehicle is stationary, unlock the steering wheel by pushing the lever down. Adjust the depth and height of the steering wheel, then lock by pulling the lever up fully.

MANUAL GEARBOX

Reverse gear

Never engage reverse gear until the vehicle is completely stationary.
The lever should be moved slowly to reduce the noise on engaging reverse gear.

If your vehicle is fitted with parking sensors, the system comes into operation when reverse gear is engaged, confirmed by an audible signal.

Refer to the "Rear parking sensors" section of chapter 3.

Good practice

To change gear smoothly, always press the clutch pedal fully down.

To prevent the mat from becoming caught under the pedal:

- ensure that the mat is positioned correctly,
- never fit one mat on top of another.

Avoid leaving your hand on the gear knob as the force exerted, even if slight, may cause wear of the internal components of the gearbox over time.

GEAR SHIFT INDICATOR*

System which reduces fuel consumption by advising the driver to change gear on vehicles fitted with a manual gearbox.

Operation

The system intervenes only when driving economically.
The gear change recommendations must not be considered compulsory, as the configuration of the road, the amount of traffic and safety remain determining factors when choosing the best gear. Therefore, the driver remains responsible for deciding whether or not to follow the advice given by the system.
This function cannot be deactivated.

Example:
- You are in third gear.

- You press the accelerator pedal moderately.

- The system may suggest that you engage a higher gear, if appropriate.

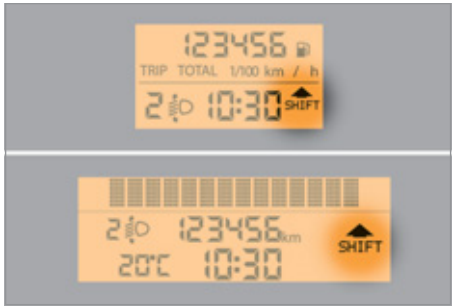

The information appears in the form of the indicator **SHIFT** in the instrument panel screen, accompanied by an up arrow for changing up or a down arrow for changing down.

In the case of driving which makes particular demands on the performance of the engine (firm pressure on the accelerator pedal, for example, when overtaking...), the system will not recommend a gear change.

* According to engine.

ELECTRONIC GEARBOX

The five-speed electronic gearbox offers a choice between the comfort of automated operation or the pleasure of manual gear changing.

This gearbox provides two driving modes:

- an automated mode for automatic control of the gears by the gearbox and therefore without any action on the part of the driver,
- a sequential mode for manual changing of the gears by the driver using the gear lever.

It consists of:

1. a gear lever **1** on the centre console for selecting the driving mode, reverse gear and neutral or for changing gear in sequential mode,
2. a button **2** to activate or deactivate the economy programme.

Gear lever gate

All movements of the gear lever are given from the middle position.

N: neutral.

With your foot on the brake, select this position to start, by moving the gear lever to the right and then forwards

R: reverse gear.

With the vehicle stationary, keep your foot on the brake pedal and move the gear lever to the right and then backwards.

M +/-: sequential mode with manual gear changing.

Make a long push to the left on the lever to select this mode, then:

- push towards **+** to change up,
- push towards **-** to change down.

A: automated mode.

Move the lever downwards to select this mode.

E: economy programme.

Press this button to activate or deactivate it.

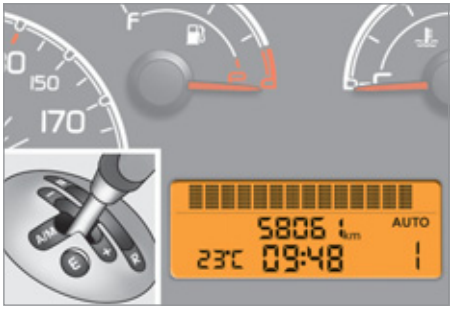

Displays in the instrument panel

N. Neutral.

R. Reverse.

1 2 3 4 5. Gears engaged.

AUTO. Comes on when automated mode is selected; it goes out when changing to sequential mode.

E. It comes on when the economy programme is activated; it goes off on deactivation.

Moving off

You must press the brake pedal.
Start the engine; the gearbox changes into neutral automatically.
the gear lever stays in the position selected before switching off the ignition.
"N" appears in the instrument panel screen, accompanied by an audible signal when you release the brake pedal, to indicate that there is a difference between the position of the gear lever and the gear selected in the gearbox.
Select first gear (move the lever towards **+**) or reverse (position **R**).
"1" or **"R"** appears in the instrument panel screen.
Release the parking brake.
Remove your foot from the brake pedal and then accelerate away.

The AUTO or manual mode used before switching off the ignition remains in memory when the vehicle is restarted.

It is also possible to move off in 2nd gear on slippery surfaces (2nd press on le +).

By rapidly pushing the accelerator fully done, the vehicle moves off quickly.

Stopping - Starting on a slope

This gearbox is an electronic gearbox which does not have a clutch pedal.
Do not use the accelerator pedal to immobilise the vehicle on a slope, apply the parking brake instead; failure to follow this procedure can overheat the clutch and damage the gearbox.
When moving off on a slope, accelerate gradually while releasing the parking brake.

Automated mode

Once you have moved off, you can switch to automated mode by selecting position **A/M**.

"AUTO" and the gear engaged appear in the instrument panel screen.

The gearbox then operates in auto-active mode, without any action on the part of the driver.
It continuously selects the most appropriate gear depending on the:
- vehicle speed,
- engine speed,
- accelerator pedal position.

To optimise driving comfort and obtain the most suitable gear, avoid sharp variations in the pressure on the accelerator pedal.
If you fully depress the accelerator pedal, the gearbox changes down for sharper acceleration.

Temporarily changing gear in AUTO mode

You can also request a gear change using the gear lever.
This action does not deactivate the automated mode, but allows temporary use of the sequential mode functions (for example: for overtaking another vehicle...).
"AUTO" remains displayed in the instrument panel screen.

"ECO" economy programme

This programme works with the automated mode to reduce fuel consumption.
Press button **E** to activate the programme.

"E" appears in the instrument panel screen, next to **"AUTO"** and the gear selected by the gearbox.

The gearbox then selects the best gear for the speed of the vehicle, the engine speed and the accelerator pedal position to reduce fuel consumption.

Sequential mode

After using the automated mode, you can return to the sequential mode by selecting position **A**/**M** again.

"AUTO" disappears and the gears engaged appear in succession in the instrument panel screen.

t is not necessary to take your foot off the accelerator pedal to change the gear.
The gear change requests are only carried out if the engine speed permits it. The system gives an audible signal if a gear change is not possible.
At low speeds, when approaching a stop or traffic lights for example, the gearbox changes down to first gear automatically.

Stopping the vehicle

To switch off the engine, with your foot on the brake pedal, you should:

- select first gear or reverse.
- apply the parking brake to immobilise the vehicle.
- switch off the ignition.

Release the brake pedal after the display of the gear engaged has disappeared from the instrument panel screen.

Never leave the vehicle with the gearbox in neutral (position **N**). In this case, there is an audible signal on switching off the ignition (ignition key in the **STOP** position).

In the event of a prolonged stop with the engine running, it is recommended that the gearbox be put into neutral (position **N**).

With the vehicle stationary, the engine running and first, second or reverse gear engaged, the gearbox changes to neutral automatically, accompanied by an audible signal, in the following circumstances:

- no action on the accelerator or brake pedals for at least 3 minutes,
- brake pedal applied for more than 10 minutes,
- driver's door opened and no action on the accelerator or brake pedals for at least 1.5 seconds,
- a gearbox fault.

Reinitialisation

Turn the ignition key to the **MAR** position.
Within ten seconds, the gear engaged should appear in the instrument panel screen.
Otherwise, turn the ignition key to the **STOP** position and wait until the instrument panel screen goes off.
Turn the ignition key to the **MAR** position again.

If the problem persist, have the system checked by a CITROËN dealer or a qualified workshop.

Back-up mode - Slow move off

This procedure should be applied if pressing the brake pedal is not recognised by the system, or if the gearbox has fault on starting the engine.
Press the brake pedal firmly.
Turn the ignition key to the **AVV** position for at least seven seconds.
The engine starts.
The system is in back-up mode; the gearbox will not go beyond the 3rd gear engaged and automated mode is not available.

If the engine does not start, have the system checked by a CITROËN dealer or a qualified workshop.

Operating fault

The illumination of this warning lamp, accompanied by a message in the instrument panel screen, indicates incorrect use of the gearbox by the driver.
With the ignition on, the flashing this warning lamp, accompanied by an audible signal and a message in the instrument panel screen, indicates a fault with the gearbox.
Have it checked by a CITROËN dealer or a qualified workshop.

Never select neutral **N** while the vehicle is moving.
Only engage reverse gear **R** with the vehicle immobilised and the brake pedal pressed.
You risk damaging the gearbox if you press the accelerator and brake pedals simultaneously.

When towing your vehicle, ensure that the gearbox is in neutral (position **N**).

HILL START ASSIST

An integral part of the ESP system, it facilitates starting on a gradient by keeping your vehicle immobilised temporarily (approximately 2 seconds), the time it takes to move your foot from the brake pedal to the accelerator pedal.

This function is only active when:

- the vehicle is completely stationary, with your foot on the brake pedal,
- the engine is running,
- the gradient is steeper than 5 %,

In STOP mode of Stop & Start, hill start assist is inactive.

Operation

On a slope, with engine running and the vehicle stationary, the vehicle is held for a brief moment when you release the brake pedal:

- provided you are in first gear or neutral with a manual gearbox,
- provided you are in position **A** or **M** with an electronic gearbox,

On a descending slope, with the vehicle stationary, the engine running and reverse gear engaged, the vehicle is held for a brief moment when you release the brake pedal.

After 2 seconds, if the vehicle has not moved off, the system is deactivated automatically by gradually reducing the brake pressure. During this phase, the characteristic sound of brakes being released will be heard, indicating the imminent movement of the vehicle.

Do not leave the vehicle while it is being held in the hill start assist phase. If you need to leave the vehicle while the engine is running, apply the parking brake manually. Then ensure that the parking brake warning lamp is on (not flashing) in the instrument panel.

Operating fault

If a fault occurs with the system, these warning lamps come on in the instrument panel. Contact a CITROËN dealer or a qualified workshop to have the system checked.

STOP & START

The Stop & Start system puts the engine temporarily into standby - STOP mode - during stops in the traffic (red lights, traffic jams, or other...). The engine restarts automatically - START mode - as soon as you want to move off. The restart takes place instantly, quickly and silently.
Perfect for urban use, the Stop & Start system reduces fuel consumption and exhaust emissions and offers the comfort of complete silence when stationary.

Automatic stopping of the engine is only possible after the vehicle has exceed a speed of about 6 mph (10 km/h), to avoid repeated stopping of the engine when driving slowly.

In the STOP mode Stop & Start, hill start assist is inactive.

Never leave your vehicle with out first turning off the ignition with the key.

Never refuel with the engine in STOP mode; you must switch off the ignition with the key.

Operation

Going into engine STOP mode

The **"S"** warning lamp comes on in the instrument panel and the engine goes into standby:

- **with a manual gearbox**, with the vehicle stationary, put the gear lever into neutral, then release the clutch pedal,
- **with an electronic gearbox**, with the vehicle stationary, hold the brake pedal down.

Special cases: STOP mode unavailable

The STOP mode is not invoked when:
- the driver's door is open,
- the driver's seat belt is not fastened,
- the heated rear screen is on,
- the windscreen wiper is on fast wipe,
- reverse gear is engaged,
- some special conditions (battery charge, engine temperature, particle filter regeneration, braking assistance, ambient temperature...) where the engine is needed to assure control of a system.

In this case, a message appears in the instrument panel screen, accompanied by the **"S"** warning lamp, which flashes for a few seconds, then goes off.
This operation is perfectly normal.

Going into engine START mode

The **"S"** warning lamp goes off and the engine starts:

- **with a manual gearbox**, depress the clutch pedal,
- **with an electronic gearbox:**
  - gear lever in position **A** or **M**, release the brake pedal,
  - or engage reverse gear.

In STOP mode, moving the gear lever on an electronic gearbox starts the engine, in anticipation of moving off.

If the engine stops automatically when the vehicle is on a slope, as hill start is only active with the engine running, it is necessary to restart the engine by engaging a forward gear and releasing the brake pedal.

Special cases: START invoked automatically

The START mode is invoked automatically when:

- the vehicle's is free wheeling on a slope,
- the windscreen wiper is on fast wipe,
- the engine has been stopped for around 3 minutes with Stop & Start,
- some special conditions (battery charge, engine temperature, braking assistance, ambient temperature...) where the engine is needed to assure control of a system.

In this case, a message appears in the instrument panel screen, accompanied by the **"S"** warning lamp, which flashes for a few seconds, then goes off.

This operation is perfectly normal.

Good practice

With a manual gearbox in STOP mode, if a gear is engaged without fully depressing the clutch pedal, restarting may not take place. A warning lamp or message is displayed in the instrument panel asking you to fully depress the clutch pedal to allow restarting. With the engine stopped in STOP mode, if the driver unfasten's their seat belt and opens a front door, the engine can only be restarted using the ignition key. This is indicated by an audible signal, accompanied by flashing of the service warning lamp and a message in the instrument panel screen. If following an automatic restart in START mode, the driver takes no action on the the vehicle during the next 3 minutes, the system stops the engine definitively. The engine can then only be restarted using the key.

Deactivation

At any time, press the **"S - OFF"** switch to deactivate the system.
This is confirmed by the switch warning lamp coming on accompanied by a message in the instrument panel screen.

If the system has been deactivated in STOP mode, the engine restarts immediately.

To give precedence to the control of the temperature in the passenger compartment, the Stop & Start system should be deactivated to allow continuous operation of the air conditioning.

Reactivation

Press the **"S - OFF"** switch again.
The system is active again; this is confirmed by the switch warning lamp going off and a message in the instrument panel screen.

The system is reactivated automatically at every new start using the key.

Operating fault

In the event of a fault with the system, the Stop & Start system is deactivated and the service warning lamp comes on, accompanied by a message in the instrument panel screen.
Have it checked by a CITROËN dealer or a qualified workshop.
In the event of an operating fault with STOP mode, it is possible to restart the engine by depressing the clutch pedal fully and putting the gear lever into neutral.

Maintenance

Before working under the bonnet, you must switch off the ignition with the key to avoid any risk of injury resulting from automatic operation of START mode.

This system requires a specific battery with a special specification and technology (reference numbers available from a CITROËN dealer or a qualified workshop).
Fitting a battery not listed by CITROËN introduces the risk of malfunction of the system.

The Stop & Start system makes use of advanced technology. Specialist knowledge is needed for any work on the system, which can only be assured by CITROËN dealers.

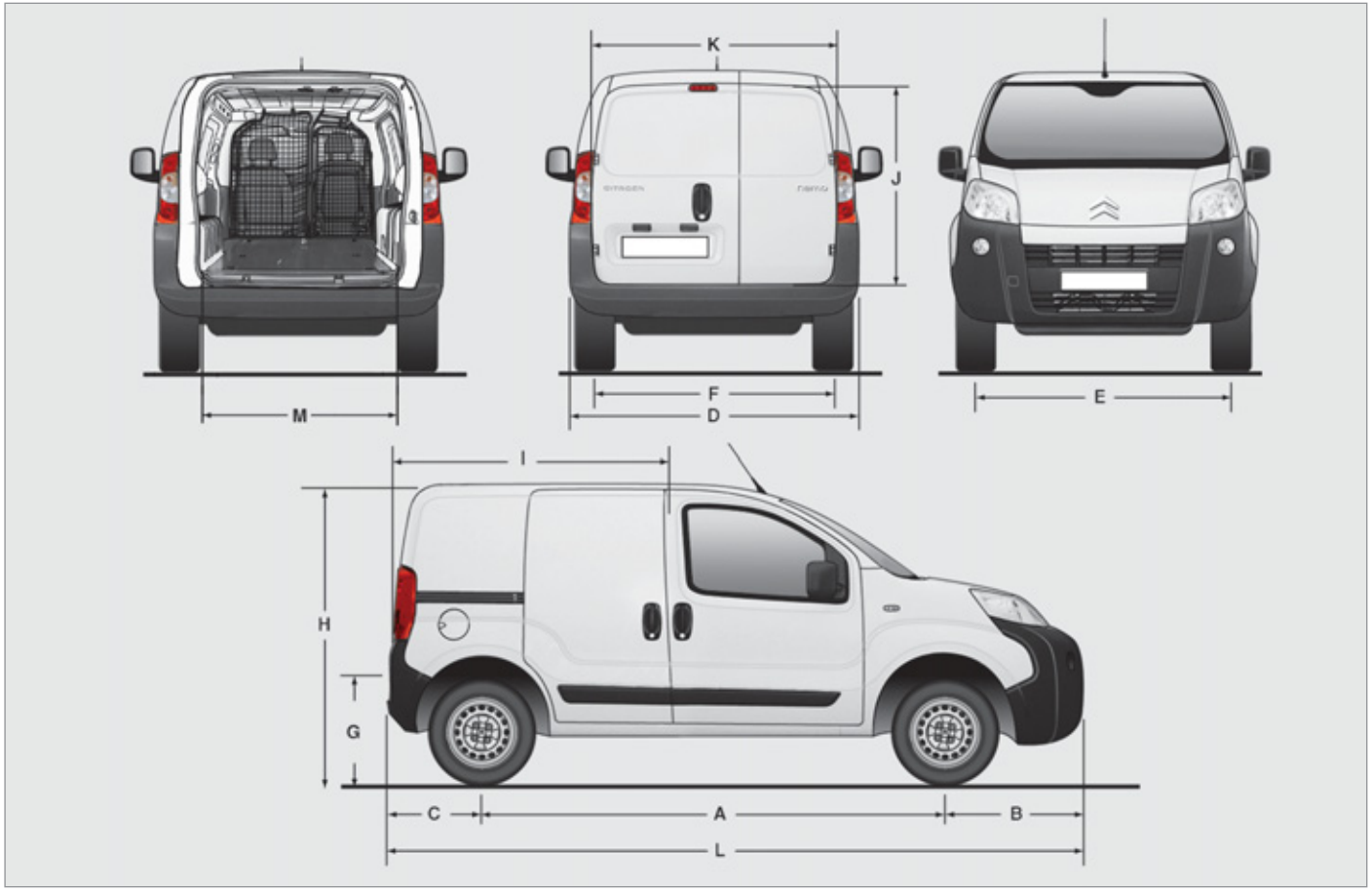
K
J
M
F
D
E
I
H
G
C
A
B
L

DIMENSIONS

The light van "L1" is the standard model, the "L2 - Worksite Pack" version is a model sold according to country:

		Light van (in mm)	
		L1	L2 (Worksite Pack)
L	Overall length	3 864	3 881
H	Overall height	1 721	1 742
	Height with roof bars	1 782	1 803
A	Wheelbase	2 513	
B	Front overhang	760	777
C	Rear overhang	591	
D	Overall width	2 019	
	Width (with mirrors folded)	1 816	
E	Width of front track	1 469	1 464
F	Width of rear track	1 465	
G	Height of load sill	527	544
I	Length of interior floor	1 523	
J	Maximum interior load height	1 205	
K	Maximum interior width (10 cm from the floor)	1 473	
M	Interior width between wheel arches	1 046	
	Volume (m^3)	2.5	

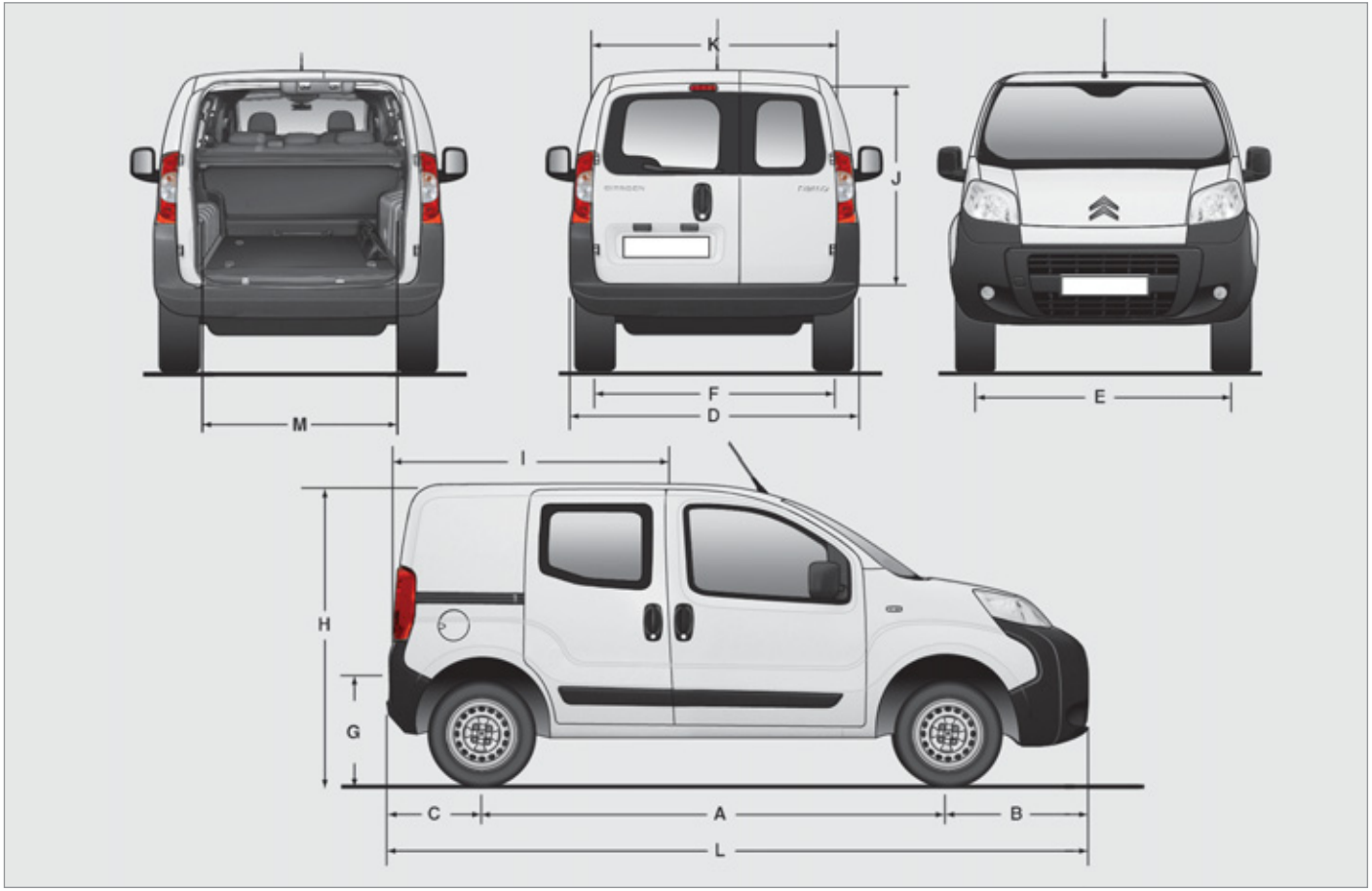
K
J
M
F
D
E
I
H
G
C
A
B
L

		Combi (in mm)	
		Standard	All-terrain
L	Overall length	3 959	3 970
H	Overall height	1 721	1 742
	Height with roof bars	1 782	1 803
A	Wheelbase	2 513	
B	Front overhang	855	866
C	Rear overhang	591	
D	Overall width	2 019	
	Width (with mirrors folded)	1 816	
E	Width of front track	1 464	
F	Width of rear track	1 465	
G	Height of load sill	527	544
I	Length of interior floor (rear bench seat in place)	743	
	Length of interior floor (rear bench seat fully folded)	1 130	
J	Maximum interior load height (under rear shelf)	592	
K	Maximum interior width (10 cm from the floor)	1 473	
M	Interior width between wheel arches	1 046	

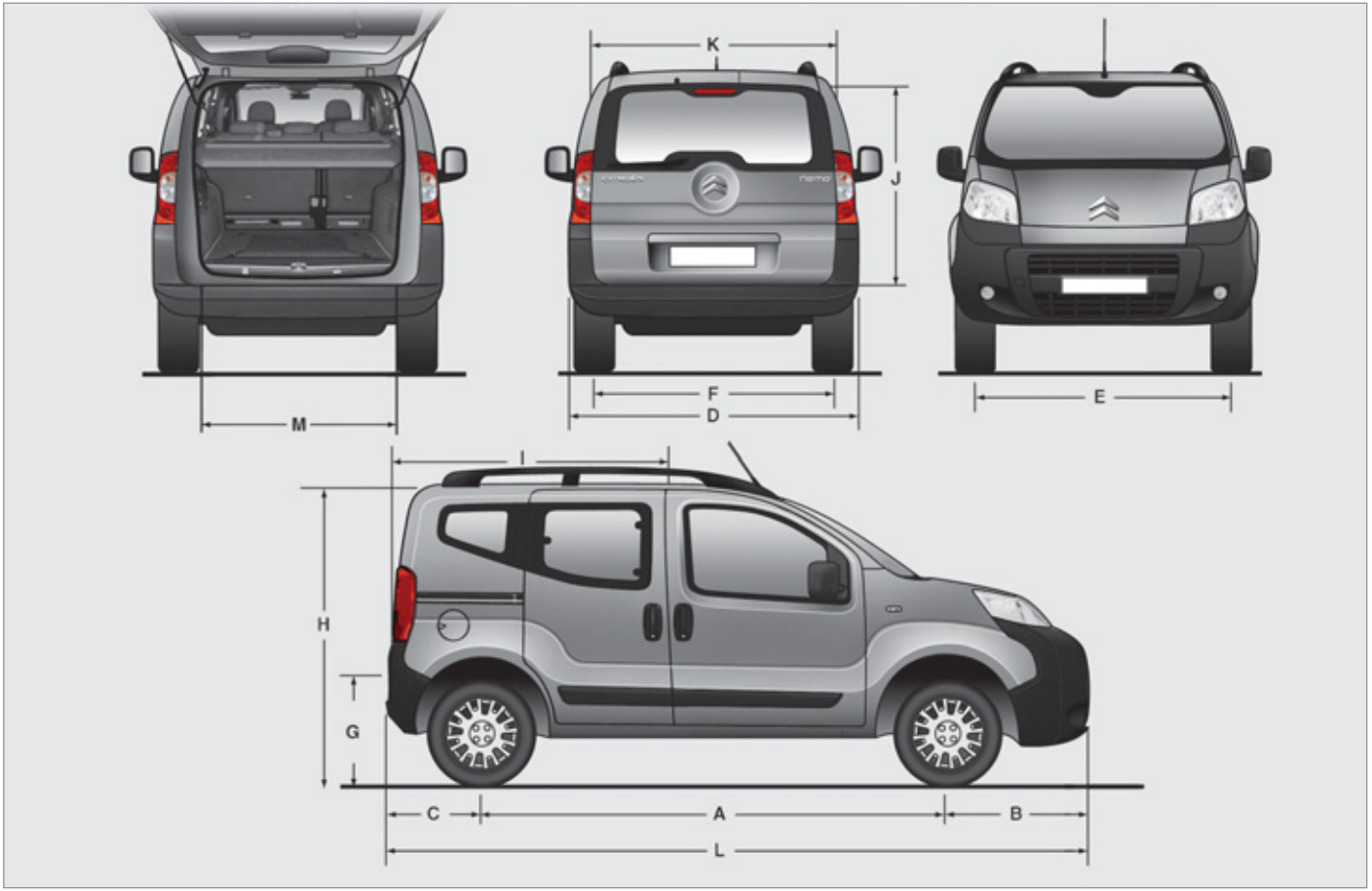
K
J
M
F
D
E
I
H
G
C
A
B
L

		Combi (in mm)	
		Standard	All-terrain
L	Overall length	3 959	3 970
H	Overall height	1 721	1 742
	Height with roof bars	1 794	1 803
A	Wheelbase	2 513	
B	Front overhang	855	866
C	Rear overhang	591	
D	Overall width	2 019	
	Width (with mirrors folded)	1 816	
E	Width of front track	1 464	
F	Width of rear track	1 465	
G	Height of load sill	527	544
I	Length of interior floor (rear bench seat in place)	743	
	Length of interior floor (rear bench seat fully folded)	1 130	
J	Maximum interior load height (under rear shelf)	592	
K	Maximum interior width (10 cm from the floor)	1 473	
M	Interior width between wheel arches	1 046	

DIESEL ENGINES			
	1.4 litre HDi 70 hp	1.3 litre HDi 75 hp	
Gearboxes	**Manual**	**Manual**	**Electronic**
Gears	5	5	5
EU standard maximum power (kW)	50	55	
Cubic capacity (cc)	1 399	1 248	
Bore x stroke (mm)	73.7 x 82	69.6 x 82	
Max power engine speed (rpm)	4 000	3 750	
EU standard max torque (Nm)	160	190	
Max torque engine speed (rpm)	2 750	1 750	
Fuel	Diesel	Diesel	
Catalytic converter	Yes	Yes	
Particle emissions filter (PEF)	No	Yes	
Stop & Start	No	Yes	
Engine oil capacity with filter replacement (litres)	3.8	3.0	

PETROL ENGINE	
	1.4 litre 75 hp
Gearbox	**Manual**
Gears	5
EU standard maximum power (kW)	54
Cubic capacity (cc)	1 360
Bore x stroke (mm)	75 x 77
Max power engine speed (rpm)	5 200
EU standard max torque (Nm)	118
Max torque engine speed (rpm)	2 600
Fuel	Unleaded petrol
Stop & Start	No
Engine oil capacity with filter replacement (litres)	3.0

WEIGHTS

Consult your registration certificate.

The legislation on towed loads in force in each country must be observed. For information regarding your vehicle's towing possibilities and its gross train weight, consult a CITROËN dealer or a qualified workshop.

TRIP COMPUTER/CONFIGURATION - PERSONALISATION OF THE VEHICLE

Using the **TRIP** button, located at the end of the wiper stalk, you can display the following information in succession:

- Range,
- Trip A,
- Average fuel consumption A,
- Current fuel consumption A,
- Average speed A,
- Trip duration A.

If TRIP B is activated in **MENU**:

- Trip B,
- Average fuel consumption B,
- Average speed B,
- Trip duration B.

Press the **MENU ESC** button for more than two seconds to return to the home screen.

Zero reset

Press the **TRIP** button for more than two seconds to reset the displayed data to zero.

Level 1 screen:

- Speed (Speed beep).
- Time (Setting the time).
- Buzz (Volume of the announcements).
- Unit (Unit of measurement).
- Bag p (Passenger's airbag).

Refer to the corresponding line of the configuration - personalisation table on the following pages.

Level 2 screen:

The control panel located beside the steering wheel provides access to screen menus allowing personalisation of some of your systems.

Eight languages are available: Italian, English, German, French, Spanish, Portuguese, Dutch and Turkish.
As a safety precaution, the menus can only be accessed when the ignition is off (engine off).
Refer to the corresponding line of the configuration - personalisation table on the following pages.

This button enables you to:
- access the menus and sub-menus,
- confirm your selections within a menu,
- exit from the menus.

A long press enables you to return to the home screen.

This button enables you to:
- scroll up through a menu,
- increase a value.

This button enables you to:
- scroll down through a menu,
- decrease a value.

Menu...		Press...		Sub-menu...	Press...		Select...	Confirm and exit	Enables you to...
M ▲ ▼	**1** Speed Beep	M	▲	ON	M	▲	Increase	M	Activate/deactivate the audible signal indicating exceeding of the programmed speed and select the speed value.
						▼	Decrease		
			▼	OFF					
M ▲ ▼	**2** Activate Trip B	M	▲	ON	M	▲	Activate	M	Display a second trip, "Trip B".
			▼	OFF		▼	Deactivate		

Menu...	Press...	Sub-menu...	Press...	Select...	Confirm and exit	Enables you to...
M ▲ ▼ **3** Set the time	M	▲ Hours	M	▲ Increase ▼ Decrease	M	Set the clock.
		▼ Format	M	▲ 24 hour ▼ 12 hour	M	Select the clock display mode.
M ▲ ▼ **4** Set the date	M	▲ ▼ Year/Month/Day	M	▲ Increase ▼ Decrease	M	Set the date.
M ▲ ▼ **5** See radio	M			▲ ON ▼ OFF	M	Display the name of the station. Display the CD track number.
M ▲ ▼ **6** Autoclose	M	While moving	M	▲ ON ▼ OFF	M	Activate/deactivate the automatic locking of the doors above 12 mph (20 km/h)
M ▲ ▼ **7** Measurement unit	M	▲ Distances	M	▲ Km ▼ Mi(les)	M	Select the distance display unit.
		Temperature	M	▲ °C ▼ °F	M	Select the temperature display unit.
		▼ Consumption	M	▲ km/l ▼ l/100 km	M	Select the fuel consumption display unit.
M ▲ ▼ **8** Language	M			▲ ▼ List of languages available	M	Select the display language.
M ▲ ▼ **9** Volume of announcements	M			▲ Increase ▼ Decrease	M	Increase/decrease the volume of the signals and warnings (the volume changes immediately when the button is pressed).

Menu...		Press...		Sub-menu...	Press...		Select...	Confirm and exit	Enables you to...
M ▲ ▼	**10** Volume of the buttons	M				▲	Increase	M	Increase/decrease the volume of the buttons.
						▼	Decrease		
M ▲ ▼	**11** Service	M				▲	(Km/Miles before oil change)	M	Display the miles/kilometres remaining before the next oil change.
						▼			Display the oil level.
M ▲ ▼	**12** Bag (passenger's airbag)	M	▲	ON	M	▲	Yes	M	Activate the passenger's airbag.
						▼	No		
			▼	OFF	M	▲	Yes	M	Deactivate the passenger's airbag.
						▼	No		
M ▲ ▼	**13** Exit from menu							M	Exit from the menu. Press the arrow at the bottom to go to the first menu.

REAR PARKING SENSORS

The audible system consists of four proximity sensors, fitted in the rear bumper. It detects any obstacle which comes within range: person, vehicle, tree, fence, behind the vehicle during the manoeuvre.
However, it will not be able to detect obstacles located immediately below the bumper.
An object, such as a stake, a roadworks cone or any other similar object may be detected at the beginning of the manoeuvre but may no longer be detected when the vehicle moves close to it.
This system does not take the place of the vigilance and responsibility of the driver.

Engage reverse gear

The proximity information is indicated by an audible signal which becomes more frequent as the vehicle approaches the obstacle.
When the distance between the rear of the vehicle and the obstacle is less than approximately thirty centimetres, the audible signal becomes continuous.
This function will be deactivated automatically if a trailer is being towed.
You are advised to obtain a towbar recommended by CITROËN and have it installed by a professional.
If anomalies are detected on engaging reverse gear, the warning lamp comes on, possibly accompanied by a message in the screen.

Stop the assistance

Change to neutral.

Operating fault

If this warning lamp or the service warning lamp comes on in the instrument panel, accompanied by a message in the screen, contact a CITROËN dealer or a qualified workshop.

Good practice

In bad weather or in winter, ensure that the sensors are not covered with mud, ice or snow.

FIRST STEPS

Control panel

Selection of the AM waveband.
Use the left/right arrows for an automatic station search.
Use the up/down arrows for a manual station search.

Requires a long press.

Setting the audio options: bass, treble, fader (front/rear), balance (left/right), loudness, EQ Preset (equaliser).
Use the up/down arrows to select the option.
Use the left/right arrows to increase or decrease the value of the option or change the equaliser.

CD eject.

Volume Increase/ Decrease.

On.
Off.

Mute On/Off.

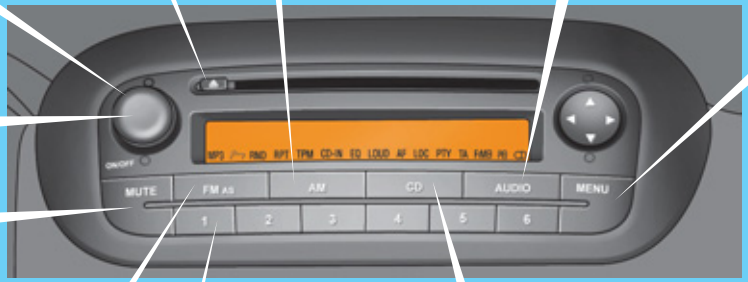

Access to the menu.
Use the up/down arrows to select one of the following functions:

- AF switching.
- Traffic info.
- Regional mode.
- MP3 display.
- Speed volume.
- External audio vol.
- Radio off.
- Restore default.

Use the left/right arrows to change the setting of the function selected.

Selection of the FM waveband.
Automatic storing of stations (autostore AS).

Selection of the CD/CD MP3 source.
Use the left/right arrows to select the previous/next track.
Use the left/right arrows to fast forward/ backward playing of the current track.
In CD MP3 mode: use the up/down arrows to change folder.

1/2/3/4/5/6: selection of the stored station.
Storing a station.

FIRST STEPS

Steering mounted controls

Increase volume.

RADIO: select the next preset station down.
CD: select the previous track.
CD MP3: select the previous folder.

Mute On/Off.

Change audio source: RADIO/ CD/CD MP3.
Select waveband: FM1/FM2/ FMT/MW/LW.

Bluetooth hands-free system*.

Bluetooth hands-free system*.

Reduce volume.

RADIO: select the next preset station up.
CD: select the next track
CD MP3: select the next folder.

* For more information on the using the Bluetooth hands-free system, refer to the corresponding section.

"AUDIO FUNCTIONS" MENU

Press the **MENU** button on the audio equipment to gain access to the "Audio functions" menu.
Press the "▲" or "▼" button to select one of the configurable audio functions below.

RDS "AF Switching"

The RDS (Radio Data System) enables you to continue listening to the same station, regardless of the frequency that it uses in your current location. The audio equipment continuously searches for the transmitter which offers the best reception for the station.
Press the "◀" or "▶" button to activate (ON) or deactivate (OFF) the RDS.
On the FM waveband, "AF" appears on the display if the RDS is activated and the station is broadcasting with the RDS.

"Traffic Info"

All traffic information announcements will be given priority regardless of which source is currently playing.
The EON (Enhanced Other Networks) system links stations which belong to the same network. It allows you to receive traffic information transmitted by a station which belongs to the same network as the station to which you are listening.
The volume of the traffic information is independent of the volume of the other sources. You can adjust it using the volume button during traffic announcements; this setting will be stored for the next announcement.
Press the "◀" or "▶" button to activate (ON) or deactivate (OFF) the TA function.
On the FM waveband, "TA" appears on the display if the TA function is activated and "TPM" appears if the station broadcasts traffic information.

"Regional Mode"

Some stations, organised in a network, broadcast regional programmes in the various areas which they serve. The regional mode allows you to choose to continue listening to the same programme.
Press the "◀" or "▶" button to activate (ON) or deactivate (OFF) the REG function.
On the FM waveband, "LOC" appears on the display if the REG function is activated and the station finds a local frequency.

"MP3 Display"

Press the "◀" or "▶" button to display the track number or the MP3 CD information (Artist/Album/Folder/File/Title/Time elapsed).
"MP3" appears on the display if the function is activated and the CD contains tracks in the MP3 format.

Automatic volume control "Speed Volume"

Press the "◀" or "▶" button to minimise (LOW), maximise (HIGH) or deactivate (OFF) the automatic control of the volume in relation to the vehicle speed.

"External Audio Vol"

Press the "◀" or "▶" button to decrease (down to 0 minimum), increase (up to 40 maximum) or deactivate (OFF) the volume of the external source (e.g.: hands-free kit).

Programmed switching off "Radio Off"

Press the "◀" or "▶" button to programme the switch-off time of "00 MIN" or "20 MIN". This countdown is taken into account with the doors closed and the key in the **STOP** position.

"Restore Default"

Press the "◀" or "▶" button to retain the modified values (NO) or restore the default values (YES).
"Restoring" appears on the display during the resetting of the configuration values.

CD

PLAYING A CD OR AN MP3 COMPILATION

Insert circular compact discs only.
Some anti-pirating systems, on original discs or CDs copied using a personal recorder, may cause faults which are no reflection on the quality of the original player.

1 CD

Insert a CD or an MP3 compilation in the player, play begins automatically.
If the player already contains a disc, press the CD button.

2

Press one of the buttons to select a track on the CD.

MP3

The MP3 format, an abbreviation of MPEG 1.2 & 2.5 Audio Layer 3, is an audio compression standard which permits the recording of several tens of music files on a single disc.

In order to be able to play a recorded CDR or CDRW, when recording it is preferable to select standards ISO 9660 level 1.2 or Joliet.
If the disc is recorded in another format, it may not be played correctly.

It is recommended that the same recording standard is always used for an individual disc, with as low a speed as possible (4x maximum) for optimum sound quality.
In the particular case of a multi-session CD, the Joliet standard is recommended.

The audio equipment will only play files with the extension ".mp3" with a sampling rate of 22.05 KHz or 44.1 KHz.
No other type of file (.wma, .mp4, m3u...) can be played.

It is advisable to restrict file names to 20 characters without using special characters (e.g.: " " ? ;) to avoid any playing or displaying problems.

BLUETOOTH HANDS-FREE SYSTEM

INTRODUCTION

This system allows you to:

- send and receive calls via the Bluetooth® connection with your mobile telephone,
- display the names of your contacts and numbers from the directory of your mobile phone in the instrument panel screen,
- use voice commands to make a call and manage your contacts while keeping both hands on the steering wheel,
- hear your text messages via the voice synthesiser built into the system,
- listen to MP3, WMA, AAC, M4A, MP4 and WAV audio files from a USB storage device,
- display information on the track being played in the radio screen (title, artist, etc...),
- control vocally a portable music player (iPod® type),
- recharge your portable music player (iPod® type) via the USB port.

KEY

Indicates that a long press is required to start the action described.

Voice mode

Requires a press on the steering mounted "voice" control before speaking the desired voice command.

Speak the designated voice command clearly and distinctly.

PRESENTATION

Display, USB port, controls

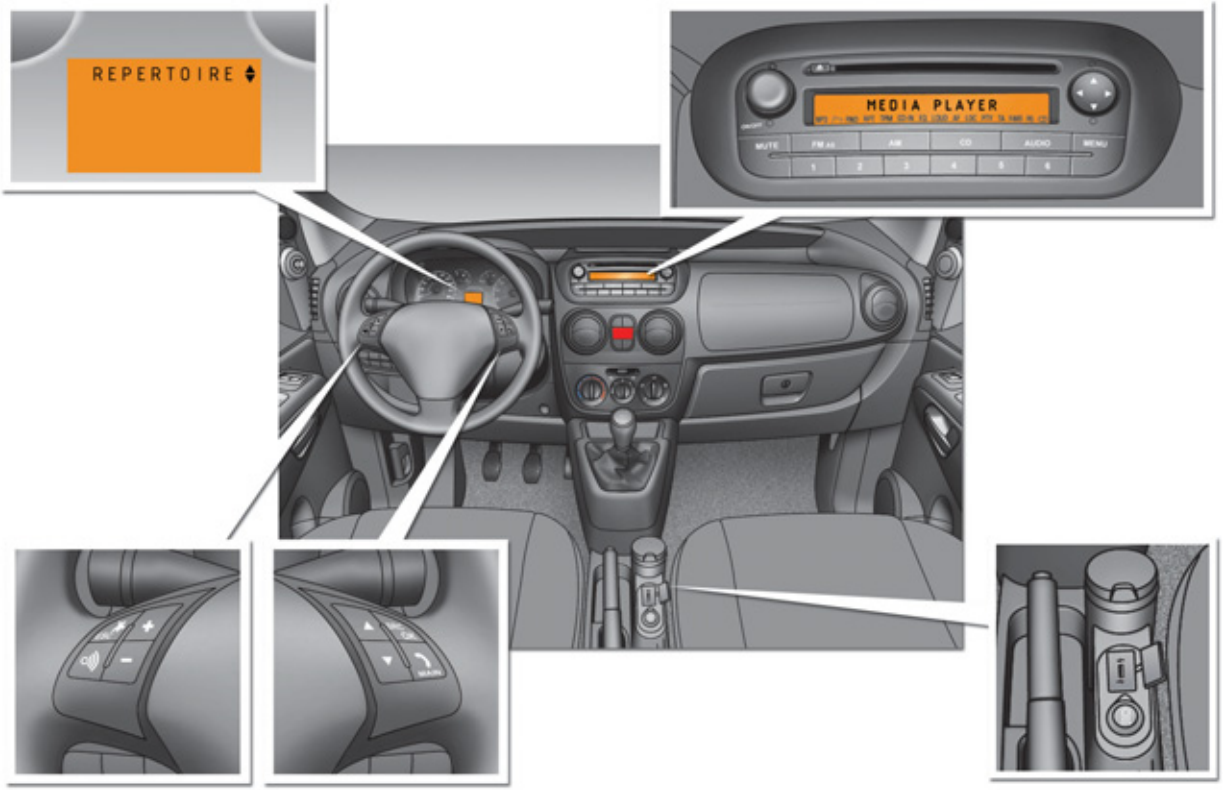

PRESENTATION

Description of the steering mounted controls

Display of the menus and directories of the files being played (USB storage device).

USB connection port. Remove the plastic cover to connect your portable player.

Pause/resume the file being played (portable player).

Adjustment of the volume of the functions: hands-free, audio and text message player, voice announcements.

- Scroll the menu options.
- Select the files to be played (portable player).
- Scroll the list of text messages.

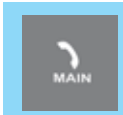

- Activate the main menu.
- Confirm the current menu option.
- Accept the incoming call.
- Switch one telephone conversation to another.
- Select a visual message.
- Reject an incoming telephone call.
- End the current telephone call.

- Confirm the current menu option.
- Transfer he telephone conversation from the hands-free system to the mobile telephone and vice versa.
- Select the audio source.
- Select the text displayed.

- Deactivate voice recognition.
- Interrupt the voice message.
- Exit from the main menu.
- Exit from a sub-menu and return to the previous menu option.
- Exit without storing.
- Deactivate/reactivate the microphone during a telephone conversation.
- Set the volume of the incoming call ring to zero.

- Activate voice recognition.
- Interrupt the voice message in order to issue a new voice command.
- Repeat the last voice message.

PRESENTATION

Description of voice commands

By pressing this button and saying "HELP", you have access to the list of voice commands available at any time or by saying "HELP" after a system message.

You can access the main menu of the system via the voice command by pressing this button.

The main voice commands for navigating in the menu are the following:

LAST CALLS		HENRY BRIDGES		
	OK	CHRISTOPHER ANDREW		
		123456789		
PHONEBOOK		HENRY BRIDGES		
	OK	CHRISTOPHER ANDREW		
		123456789		
MESS. READER		READ LAST		
		IN BOX	OK	VIS+ACOUST
		DELETE ALL		VIS. SIGNAL
	OK	SIGNAL TYPE		READER OFF
MEDIA PLAYER		USB OPTION*	OK	PLAY ANYTHING
	OK	SET USB		FOLDERS**
				ARTISTS
				GENRES
				ALBUMS
				PLAYLISTS
			OK	TRACK PLAY
				SHUFFLE
				TRACK LOOP
SETTINGS	OK	USER DATA	OK	COPY PHONEBOOK
		PAIRING		DELETE USERS
		ADVANCED OPTIONS		DELETE PHONEBOOK
		EXIT		DELETE ALL
				ADD CONTACTS

* If the system is activated.

** Not available on iPod®.

MOBILE TELEPHONE WITH HANDS-FREE FUNCTION

Pairing a mobile telephone

Pairing consists of setting your vehicle's Bluetooth® system to recognise your mobile telephone.
For this you must activate the Bluetooth® function of your telephone and set its visibility.

With the ignition on, activate the main menu.

Select SETTINGS.

Confirm.

Select PAIRING.

Confirm.

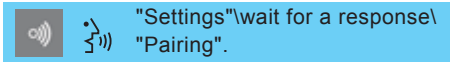

"Settings"\wait for a response\ "Pairing".

PIN

This number, which permits recognition of your mobile telephone, is generated randomly by the system.
It is communicated by the instrument panel screen and is repeated verbally by the system.
This PIN is independent of your SIM card and your mobile's access code.
Once your handset has been paired, there is no need to keep a record of this number.
If you change your mobile telephone, you must repeat the pairing procedure as you will be given a new PIN.

Look for the option which displays the Bluetooth® system detected by your telephone.

When the system has been identified, a message appears in your telephone (My car, …).

When prompted by the telephone, enter the PIN displayed in the instrument panel.
If the pairing has been successful, the system announces "Connecting".
The name of the telephone identified appears in the instrument panel screen, pairing is confirmed.

Pressing MAIN or ESC during the pairing phase may cancel the procedure.
If the pairing fails, an error message will appear; in this case, repeat the procedure.

Downloading your phonebook

There are 2 options:

1 - Following the pairing procedure, the system suggests downloading your telephone's phonebook.

Pressing confirms your agreement.

"Yes" starts the download.

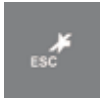

Pressing declines this download.

"No" declines.

2 - You can download the phonebook later via the menu:

Activate the main menu.

Select SETTINGS then USER DATA then PHONEBOOK.

"Settings"\"User data"\
"Download phonebook".

Calling a contact recorded in the phonebook

Your telephone's phonebook must first be downloaded into the system.

Activate the main menu.

Select PHONEBOOK.

Confirm.

Select the group with which the person to be contacted is associated.

Confirm.

Select the name.

Confirm to make the call, if the person has only one number.

"CALL [Name of the person]"\
wait until the information relating to the person (name, tel. n°, ...) appears\
"Yes" to make the call or "No" to cancel.

If the person has more than one number:

Select the number.

Confirm to make the call.

Specify "Home" or "Work", or "NEXT" or "PREVIOUS".
Press OK to make the call.

Making a call by dialling a number

By means of the voice commands only

"Dial/Dial a number"\
Say the number character by character (+, #, *), digit by digit (0 to 9).

The system displays and verbally repeats the number recognised.

"CALL" if the number is correct.
or
"Cancel" to cancel dialling of the number.
"Start over" to delete and start dialling another number.
"Repeat" to hear the number again.

Ending a call

Press and hold.

Incoming call

If the person is recorded in the phonebook, his name is displayed.

Press to accept the call.

Press and hold to decline the call.

Press to ignore the call, however, the call is stored in the log of incoming calls.

During a call, if a second incoming call is received.

Press to switch the conversation and place the other person on hold.

Transferring an active call

There are 2 options:

1 - From the mobile telephone to the hands-free system

With the ignition on, the recognition connection between the mobile telephone and the vehicle's audio equipment is done automatically.

Confirm this recognition using the keypad on the mobile telephone.

The call can then be transferred.

2 - From the hands-free system to the mobile telephone

Press, the system's controls are still active.

Placing a call on hold

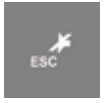

Press to deactivate the microphone and place your contact on hold.

Press again to resume the conversation.

Call list

This enables you to call the number of one of the last 10 calls received, of one of the last 10 people called or of one of the last 5 missed calls.

Activate the main menu.

Select CALL LIST.

Confirm.

Select the number to be called.

Confirm.

"Callback" for the last person who called you, or
"Redial" for the last person you called.
"Yes" or "No" to confirm/cancel.
The "Redial" button can also be used.
The system will again ask "Redial or callback?".

"Callback" to call back the last person who called you.
"Redial" to redial the last person you called.

VOICE COMMANDS
Settings/pairing

The key words which can be recognised by the system are organised into three levels (levels 1, 2 and 3).
When you say a level 1 command, the system makes the level 2 commands available; when you say a level 2 command, the system makes the level 3 commands available.

Level 1	Level 2	Level 3	Actions
Settings Adjust Configure			Activation of the hands-free system SETTINGS menu.
	User data		Activation of the USER DATA menu.
		Delete users	Deletion of the data recorded for all of the users.
		Delete contacts/ Delete directory/ Delete numbers	Deletion of the phone book data.
		Copy phone book/ Copy phonebook/ Copy numbers	Transfer of the phone books from your mobile telephone to the hands-free system (available according to the type of mobile telephone).
		Add Contacts	Transfer of the names from your mobile telephone to the hands-free system (available according to the type of mobile).
		Delete all	Deletion of the pairing data and of the phone books/contacts of all of the telephones paired, with restoration of the default settings of the hands-free system.
	Pairing/Pair/ Pair the user		Activation of the pairing procedure for a new mobile telephone.
	Advanced options		Activation of the ADVANCED OPTIONS menu.

VOICE COMMANDS

Mobile telephone with hands-free function

The key words which can be recognised by the system are organised into three levels (levels 1, 2 and 3).
When you say a level 1 command, the system makes the level 2 commands available; when you say a level 2 command, the system makes the level 3 commands available.

Level 1	Level 2	Level 3	Actions
Dial/Dial a number	One, Two, ... , Plus, Star, Hash	Call/Dial	Entering the digits or symbols to dial the telephone number.
	Delete/Correct		Deletion of the last group of digits entered.
	Start over		Deletion of all of the groups of digits entered with the option of entering a new number.
	Repeat		Repeating the telephone number entered and recognised by the hands-free system.
	Cancel		Cancellation of dialling of the number.
			Sending the call to the number entered verbally.
Call	[Name]	Yes/No	Call to the name of the person, stored in the system's phone book.
		Mobile	Call to the name of the person with personalisation if there are several numbers stored in the system.
		Home	
		Work/Office	
Redial			Call to the last person called.
Callback			Call to the last person who called.

TEXT READER

Only on mobile telephones with this function

If your mobile telephone includes this function, every time a text message is received, the system produces an audible signal and offers to read the text message vocally.

Read an incoming text message

To read the text received.

"Yes" starts the playback of the text received.

To save a message and read it later.

"No" to save the message and read it later.

Read the last text received

Activate the main menu.

Select MESS. READER.

Confirm.

Select READ LAST.

Confirm.

"Read last" starts playback of the last text message received.

List of text messages

The system can hold around 20 text messages. If the list is full, reception of a new text message causes the deletion of the oldest text message..

To go to a specific text message:

Activate the main menu.

Select MESS. READER.

Confirm.

Select IN BOX.

Confirm.

Select the desired text message.

Confirm to read the text message.

"Message reader" then after the audible signal "message received".
"Previous" or "Next" moves through the list of text messages.
"Read" starts reading of the text message selected.

Managing text messages

During reading of the message:

Activate the main menu.

Choose the desired option.

"Read" starts reading of the message.
"Erase" deletes the message.
"Call" allows you to contact the sender of the message.

Deleting all text messages

Activate the main menu.

Select DELETE ALL.

Confirm.

The system asks you to confirm your choice:

Confirm to delete.

To cancel.

"Message reader" then after the audible signal "Delete all".
The system requests confirmation, reply with: "Yes" to confirm or "No" to cancel.

Information settings

Activate the main menu.

Select MESS. READER.

Confirm.

Select SIGNAL TYPE.

Confirm to select from the 3 choices available:

- Audio + visual: the system signals the receipt of a message audibly and visibly and offers to read it.
- Visual only: reception of a message is signalled visibly in the instrument panel.
- Off: the text message reader is deactivated.

"Message reader" then after the audible signal "Signal type".
The system lists the options, select between: "Reader deactivated", "Audio and visual info" or "Visual info only".

VOICE COMMANDS
Message reader

The key words which can be recognised by the system are organised into three levels (levels 1, 2 and 3).
When you say a level 1 command, the system makes the level 2 commands available; when you say a level 2 command, the system makes the level 3 commands available.

Level 1	Level 2	Level 3	Actions
Message reader Messages			Activation of the MESS. READER menu.
	Messages received/ Received		Activation of the list of text messages received.
		Read/read again	Reads the text message selected in the list.
		Call	Deletion of the phone book data.
		Delete	Transfer of the phone books from your mobile telephone to the hands-free system (available according to the type of mobile).
		Back/Next/Next	Go to the next text message in the list
		Back/Previous	Go to the previous test message in the list.
	Read last/read last message/read message		Read the last text message received.
	Delete all/Delete messages/Delete		Delete all text messages in the list after confirmation.

Level 1	Level 2	Level 3	Actions
Read messages/ Messages			Activation of the MESS. READER menu.
	Type of info/Info		Deactivation of the info settings function.
		Deactivate reader/ Reader not active/ Reader off	Deactivates the reading of text messages.
		Visual and audible info/Visual and audible/Visual plus audible/Audible	Reception of a text message is signalled in the instrument panel screen and by an audible signal.
		Visual info only/Only visual/Visual	Reception of a text message is signalled only in the instrument panel screen.

PORTABLE AUDIO DEVICE PLAYER

Audio tracks in .mp3, .wma, .wav format and playlists with the extension .wpl are recognised by the system.

USB port

Connect the device to the USB port directly or using an appropriate cable (not provided).

Ignition on:
- activates the recognition connection and automatically starts the playlist,
- or activates automatic play if the system is programmed to autoplay.

Otherwise, select the track to be played via the menu.

Autoplay

Activate the main menu.

Select SETTINGS then MEDIA PLAYER then TRACK PLAY.

Confirm.

Select READER or READER OFF.

Confirm.

Selecting tracks

Activate the main menu.

Select MEDIA PLAYER.

Confirm.

Choose one of the selection modes:
FOLDERS, ARTISTS, GENRES, ALBUMS, PLAYLISTS, SHUFFLE (random play of tracks in the playlist).

"Media player", then "USB options" and finally choose "Folders", "Artists", ...

The **PLAY ALL** function enables you to listen to the entire content of a selection mode (folders, artists, …).

Confirm.

Select the file.

Start play.

Displaying the file information

This function is only available by voice command.

"Track info".

Previous track

Pressing:

- within 3 seconds following the start of play enables you to play the previous track.
- after 3 seconds enables you to listen to the current track again.

"Previous".

Next file

Press to play the next file.

"Next".

Pausing/resuming play

Pressing suspends or resumes play.

"Stop" to interrupt playback. "Play" to continue playback.

The voice function **"Play"** is only available if playback has been previously interrupted by the **"Stop"** command.

Changing the sound source

Press to select the audio source (Radio, CD, Media player).

VOICE COMMANDS
Portable audio device

The key words which can be recognised by the system are organised into three levels (levels 1, 2 and 3).
When you say a level 1 command, the system makes the level 2 commands available; when you say a level 2 command, the system makes the level 3 commands available.

Level 1	Actions
Player/Multimedia player/Media player	Activation of the MEDIA PLAYER menu.
Play/Play the track/Play the multimedia file	Activation of play.
Stop/Stop the track/Stop the multimedia file	Interruption of playing of the current file.
NEXT/Next track	Go to the next menu or file.
PREVIOUS/Previous track/Back	Go to the previous menu or file.
Shuffle on/Random play on	Activation of playing of the files in random order.
Shuffle off/Random play off	Deactivation of playing of the files in random order.
Track repeat on/Repeat on/Repeat	Activation of playing of the files in a loop.
Track repeat off/Repeat off	Deactivation of playing of the files in a loop.
Now playing/Track information/What is playing/What is this?	Display of the information for the file currently being played.
USB media settings/USB settings	Activation of the MEDIA PLAYER menu.
Activate automatic play	Activation of automatic play on connection of a portable device.
Deactivate automatic play	Deactivation of automatic play on connection of a portable device.
Shuffle/Any/Random	Activation of play of all tracks in random order

Level 1	Level 2	Level 3	Actions
Player/Multimedia player/Media player/ Player			Activation of the MEDIA PLAYER menu.
	Advanced USB options/Other options		Activation of playback options.
		Folder/Explore folders/Consult list of folders	Activation of FOLDERS menu.
		Artists/List of artists	Activation of ARTISTS menu.
		Genres/List of genres	Activation of GENRES menu.
		Album/List of albums	Activation of ALBUMS menu.
		Playlist/List of tracks	Activation of PLAYLISTS menu.

FRONT SEATS

Head restraints

Head restraint height adjustment: to raise or lower the head restraint, slide it by pressing the lug.
The adjustment is correct when the upper edge of the head restraint is level with the top of the head.
To remove the head restraint, release the base of the rod to press the tab and raise the head restraint to the highest position.
To refit the head restraint, press the tab of the lug and engage the head restraint rods in the openings keeping them in line with the seat back.

Never drive with the head restraints removed. They must be in place and adjusted correctly.

Forwards-backwards adjustment

Lift the control bar and slide the seat forwards or backwards to the required position.

Lumbar support

Turn the control.

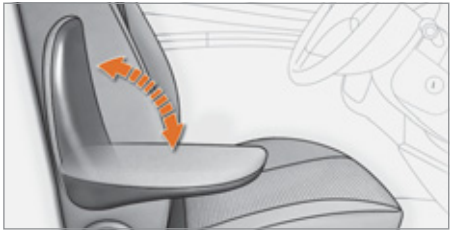

Armrest

The driver's seat may be fitted with an armrest on the centre console side.
Raise or lower completely the armrest to obtain the most comfortable driving position.

Seat back angle

Turn the control to adjust the angle of the seat back.

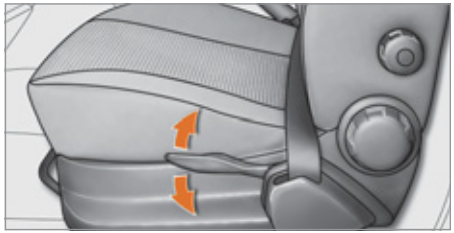

Seat cushion height

To adjust the height of the driver's seat cushion, pull the control upwards as many times as necessary to raise.
To lower, push the control downwards as many times as necessary.

Heated seat control

Press the control.
The temperature is controlled automatically.
Pressing a second time stops operation.

RETRACTABLE PASSENGER SEAT

Only move the seat when the rear seats are not occupied.

Table position

Press the head restraint to place it in the lowest position.
Push one of the controls rearwards, located on each side of the seat back.
Lower the seat back onto the seat cushion to the table position.

Retracted position

After placing the seat back in the table position, pull the seat's rear strap while guiding the folded seat back forwards and towards the floor.

Returning the seat to the sitting position

Pull the seat's rear strap to unlock the seat.
Lift the seat from the front and the rear then guide it forwards to bring it to the table position.
Push one of the controls rearwards, located on each side of the seat back while pressing on the seat back, then place the seat back in the upright position.
Press on the seat back firmly to trigger the locking of the seat on the floor.
Adjust the head restraint using the button on the side.

ONE-PIECE REAR BENCH SEAT

Table position

Press the head restraint and its lug simultaneously to place the head restraint in the low position.
Unlock the seat back by pushing the two side controls. The red indicator becomes visible.
Fold the seat back onto the seat cushion.

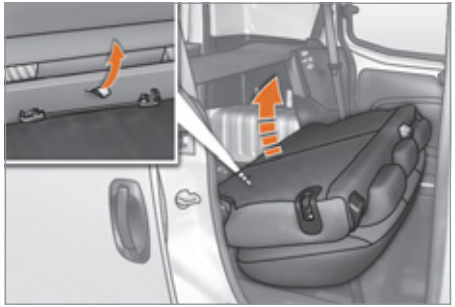

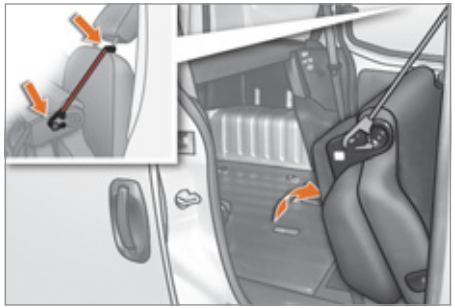

Fully folded position

After placing the seat back in the table position, pull the central strap to unlock the rear feet of the seat.
Lift the seat fully to secure it in the fully folded position.

When driving, to secure the bench, detach the red retaining strap, located on the back of the bench seat cushion, and fix one end to a front head restraint spindle and the other to the side of the seat cushion.

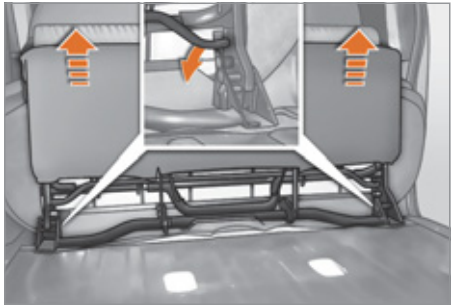

Removing the bench seat

After placing the bench seat in the fully folded position, lower the transverse bar to unlock the front feet of the seat.
Lift the bench seat to detach it from its front anchorages.

Returning the bench seat to its position

Put the bench seat in place in its front anchorages in the fully folded position.
Fold the bench seat to the table position, the front and rear feet of the seat lock automatically.

Returning the bench seat to the sitting position

Lift the bench seat back.
Take care not to trap the seat belts.
Lock the seat back by pushing it fully towards the rear. The red indicator is no longer visible.

Rear head restraints

The rear head restraints can be removed and have two positions:

- high, position for use,
- low, storage position.

To raise or lower a head restraint, pull it forwards sliding it at the same time.
To remove it, place it in the high position, push the lug and pull it forwards and upwards.
To refit it, engage the head restraint rods in the holes taking care to remain in the centreline of the seat back.

Never drive with the head restraints removed, they must be in place and correctly adjusted.

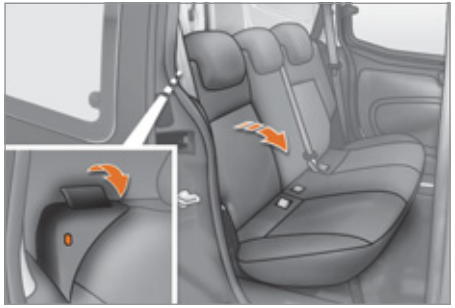

SPLIT REAR BENCH SEAT

The left-hand side (2/3) or right-hand side (1/3) of this bench seat can be folded to adapt the load space in the boot.

Table position

Press the head restraint and its lug simultaneously to place the head restraint in the low position.
Unlock the seat back by pulling the corresponding side control towards you. The red indicator becomes visible.
Fold the corresponding seat back onto the seat cushion.

Fully folded position

After placing the seat back in the table position, pull the corresponding strap to unlock the rear feet of the seat.
Lift the seat fully to secure it in the fully folded position.

When driving, to secure the bench, detach the red retaining strap, located on the back of the bench seat cushion, and fix one end to a front head restraint spindle and the other end to the side of the seat cushion.

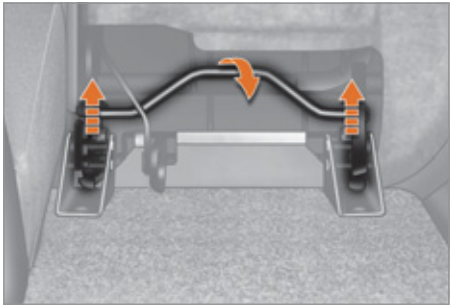

Removing the bench seat

After placing the bench seat in the fully folded position, lower the corresponding transverse bar to unlock the front feet of the seat.
Lift the bench seat to detach it from its front anchorages.

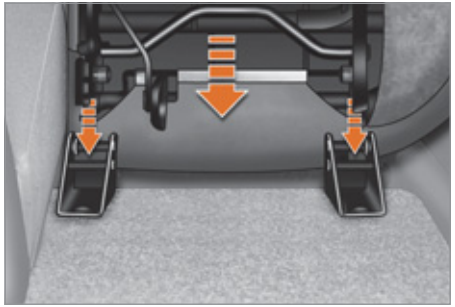

Returning the bench seat to its position

Put the bench seat in place in its front anchorages in the fully folded position.
Fold the bench seat to the table position, the front and rear feet of the seat lock automatically.

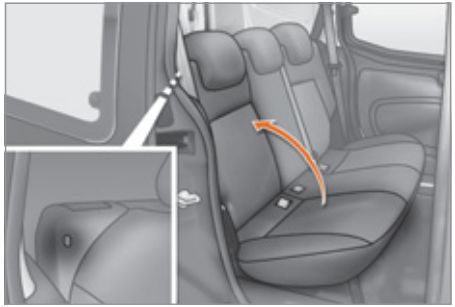

Returning the bench seat to the sitting position

Lift the bench seat back.
Take care not to trap the seat belts.
Lock the seat back by pushing it fully towards the rear. The red indicator is no longer visible.

Repeat all of these operations for the other part of the rear bench seat.

DE-ICING AND DEMISTING

Windscreen

The ventilation outlets located at the base of the windscreen and the side vents for the side windows increase the effectiveness of the de-icing and demisting. Do not obstruct these eight air outlets.
The manual air conditioning consists of the pollen filter and air recirculation.
The pollen filter permits continuous and effective filtering of dust.
The air recirculation (which can be activated by the driver or the passenger) isolates the passenger compartment from the exterior atmosphere. However, this position should only be used temporarily, the norm is to drive with the control positioned with the exterior air intake open.

Manual mode

Direct the control to this air distribution setting.
For faster and more effective de-icing and demisting of the windscreen:

- increase the air flow setting,

- move the exterior air intake control temporarily to air recirculation.

Returning to the exterior air intake position permits renewal of the air in the passenger compartment.

Rear screen and mirrors de-icing

This function only operates when the engine is running. Pressing this button activates the rapid demisting/de-icing of the rear screen and mirrors. This function switches off automatically to prevent an excessive consumption of energy. It switches off when the engine is switched off. Pressing this button switches the function off.

With Stop & Start, when the heated rear screen is switched on, the STOP mode is not available.

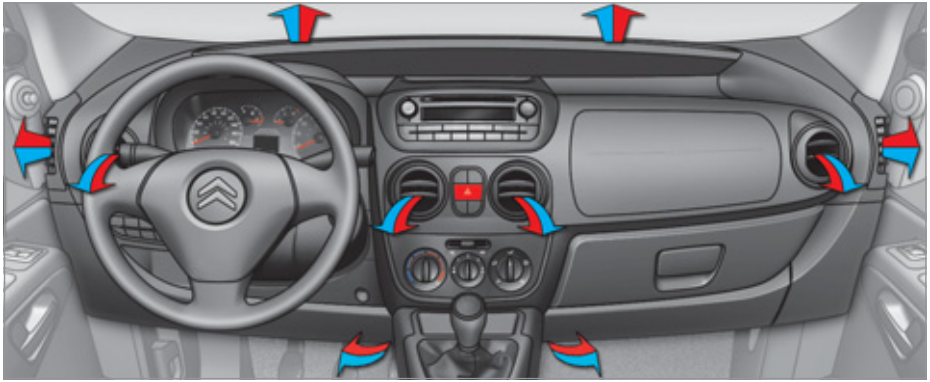

CORRECT USE OF THE AIR CONDITIONING

In order to be effective, the air conditioning should only be used with the windows closed. However, if the interior temperature remains high after a prolonged period parked in the sun, do not hesitate to ventilate the passenger compartment for a few minutes.

For even air distribution, ensure that the exterior air intake grille located at the base of the windscreen is not obstructed and that the side and central vents, the air outlets on the floor and the air extractor at the rear are open.

The air conditioning is useful in all seasons as it eliminates condensation and air humidity.

Operate the air conditioning system for 5 to 10 minutes, once or twice a month, to keep it in perfect working order.

Have the filter elements (air filter and passenger compartment filter) replaced regularly. If you drive in a dusty environment, have them replaced twice as often.

It is normal that the condensation created by the air conditioning system results in a flow of water which may form a puddle under the vehicle when parked.

If the system does not produce cold air, do not use it and contact a CITROËN dealer or a qualified workshop.

VENTS

For optimum distribution and diffusion of hot or cool air in the passenger compartment, there are:

- 2 adjustable central vents,
- 2 adjustable and closing side vents,
- 2 vents directed towards the floor of the vehicle.

These controls are located on the centre console.

Air conditioning

The air conditioning mode is operational when the engine is running. The diode is lit.

Press the air blower control. The diode lights.
The air blower control must not be in position **0** (zero flow) for air conditioning to be obtained.
Turn the control to the position required.

Temperature adjustment

Control positioned:
- in the blue zone triggers cool air,

- in the red zone triggers heating of the interior ambient air.

Air flow

The force of the blown air, from the vents, varies from **1** to the strongest **4**. Remember to adjust this control in order to reach the ambient air comfort level. To switch off the blower, place the control in position **0**.

Air distribution

The air supply distribution is directed by the control turned towards:

the side vents and the central vents,

the side vents, the central vents and the footwells,

the footwells,

the windscreen, the front side windows and the footwells,

the windscreen.

Intake of exterior air

This is the preferred operating position.

Recirculation of interior air

This position should only be temporary.
Used with the air conditioning switched on and setting of the force of blown air (from **1** to **4**), recirculation enables you to obtain the required ambient air comfort level with both hot or cold settings.
Recirculation temporarily prevents exterior odours and smoke from entering the passenger compartment. De-icing is more rapid in this position.

When your ambient air comfort level has been reached, return to the intake of exterior air position to permit renewal of the air in the passenger compartment and demisting. This operating mode is preferable.

FRONT FITTINGS

Folding writing table (Light van)

This is located in the centre of the fascia panel. In the absence of a table, the vehicle is fitted with a storage compartment.
The clip can be used to secure A5 format documents, slips, etc.
Pull the top of the table to unfold it, push to fold it.

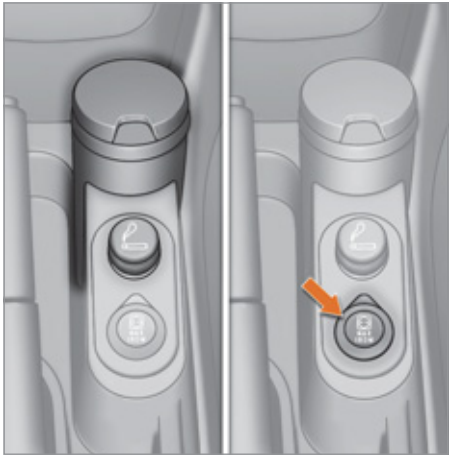

Smoker's kit

Located at the base of the centre console, this consists of a cigar lighter and an ashtray.

12 V socket (180 W max)

An accessory socket is provided next to the cigar lighter.

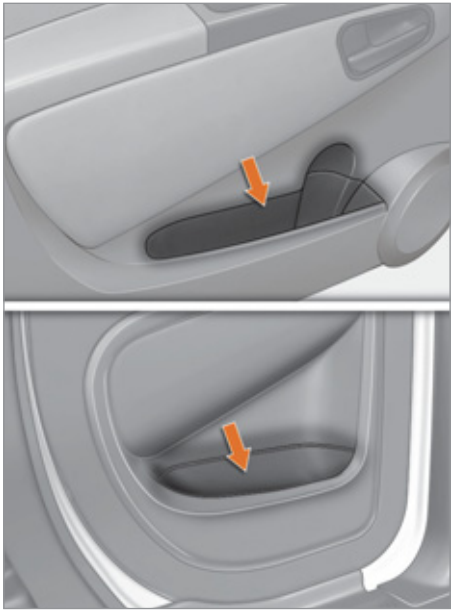

Storage compartment in the door trays

With recess for storing a 1 litre bottle.

Glove box

To open it raise the handle.
It can accommodate a laptop computer.
It provides storage for the handbook pack.

Sun visor

To avoid glare from ahead, fold and direct the sun visor down.
Toll cards, tickets, etc. can be slipped into the sun visor on the driver's side.
The sun visor on the passenger's side may be fitted with a courtesy mirror.

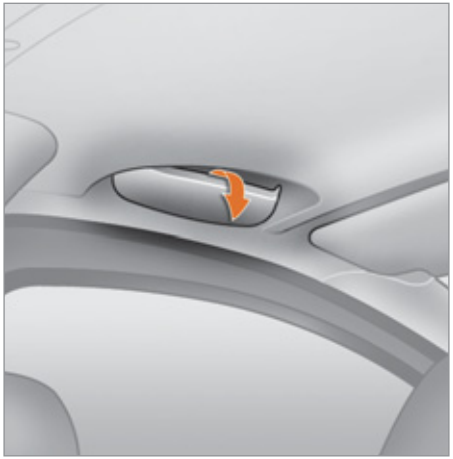

Spectacles storage (Combi)

There is a spectacles storage compartment on the driver's side, above the door.
To open it, unclip the cover pulling at the centre.

LOAD SPACE FITTINGS

Carrying passengers in the load space is not permitted.

Stowing rings

There are 6 stowing rings on the rear floor to secure your loads.
As a safety precaution in case of sharp braking, you are advised to place heavy objects as far forwards towards the driver's seat as possible.

It is advisable to immobilise the load by securing it firmly using the stowing rings on the floor.

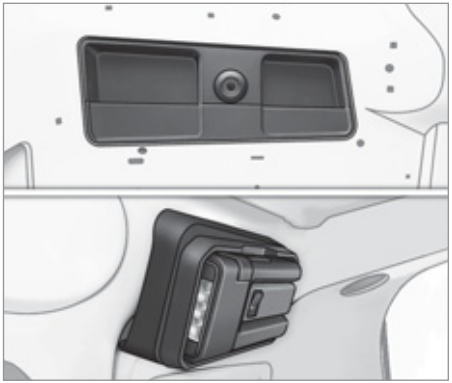

Storage tray

A storage tray is provided at the rear left of the load space.

Torch

A magnetic torch is provided at the rear right of the load space.
Remove the torch from its base by pressing the button then pivoting the torch downwards by 90 degrees.
To switch on the torch, slide the switch forwards.
To change the 4 rechargeable batteries (NiMH type), remove the protective cover from the torch.
To put the torch back in place, engage it in the notches on the base and pivot it upwards.

The torch's storage batteries recharge automatically while driving.
An additional lamp is fitted in the middle of the torch housing (refer to the "Interior lighting" section).

Ladder type vertical partition

Behind the driver's seat, a ladder type vertical partition protects the driver against the risk of load movement.

Partitions

Panel, glazed, mid-height panel with grille and modular vertical grille type partitions are available for your light van.

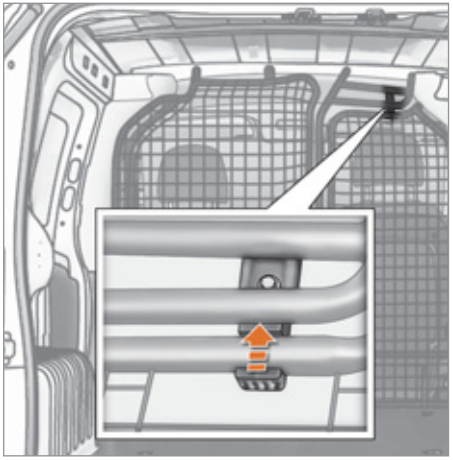

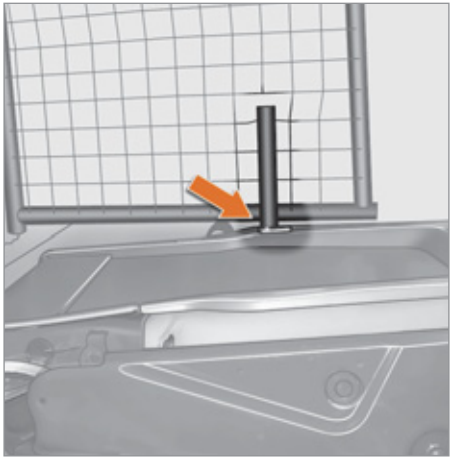

Modular vertical grille

You can obtain a two-part partition grille. Associated with the retractable seat, the grille increases the driver's safety by isolating him from the front load.

Operations:

1. Place the passenger seat in the folded position.
2. Lift the catch, located at the upper part of the grille.
3. Lift the catch, located at the lower part of the grille.
4. Pivot the grille and insert the catch in the space provided on the passenger seat back.

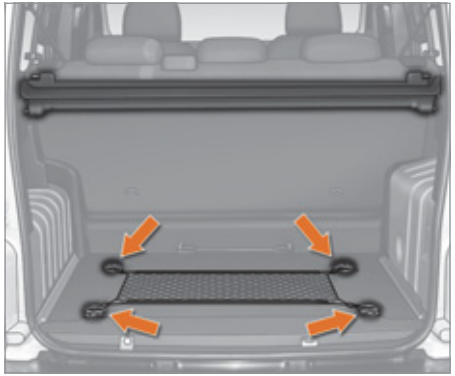

REAR LAYOUT

Stowing rings

There are 4 stowing rings on the rear floor to secure your luggage.

Luggage retaining net

Hooked onto the stowing rings, this enables you to secure your luggage.

Rear shelf

Unfold the shelf to conceal the contents of the boot from sight from the outside.
Fold the shelf back on itself for easier access to the contents of the boot.
Store the shelf behind the rear bench seat when loading bulky items vertically.

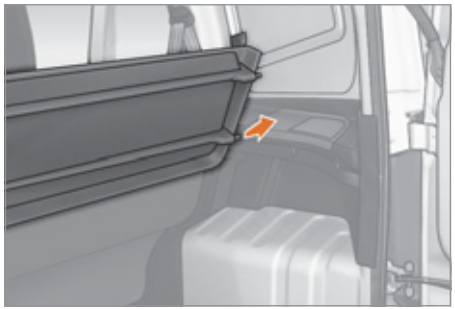

Removing the shelf

Fold the shelf back on itself.
Lift the shelf to approximately 60°.
Unclip the shelf's side fixings from its supports.
Remove the shelf.
Store the folded shelf in the location behind the rear bench seat.
To put the shelf back in place, carry out these operations in reverse order.

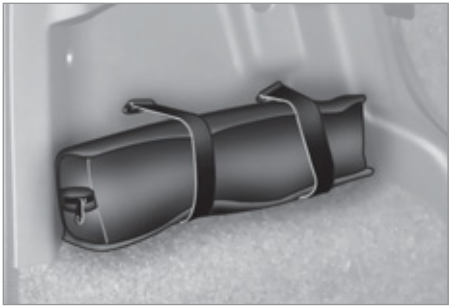

Retaining straps

There are two retaining straps on the left-hand side of the boot.
They secure the tool kit.

Torch

A magnetic torch is provided on the right-hand side of the boot.
Remove the torch from its base by pressing the button then pivoting the torch downwards by 90 degrees.
To switch on the torch, slide the switch forwards.
To change the 4 storage batteries (NiMH type), remove the protective cover, located on the torch.
To put the torch back in place, engage it in the notches on the base and pivot it upwards.
The torch's storage batteries recharge automatically while driving.
A boot lamp is installed in the centre of the torch base (refer to the "Interior lighting" section).

INTERIOR LIGHTING

Front courtesy lamp

This is located in the centre of the roof.
It can be activated by:
- tilting the lens,
- opening or closing a door,
- locking or unlocking the vehicle.

It switches off automatically, after a few minutes, if the doors remain open, or when the ignition is switched on.
The courtesy lamp may be fitted with an alarm sensor, a microphone for the hands-free kit and reading lights.
The reading lampshave right-hand and left-hand switches.

Rear courtesy lamp

This is located on the upper part of the rear right side.
Press the side of the courtesy lamp lens to switch it on or off.
It comes on automatically when a door is opened.

Good practice

It switches off automatically:
- if the switch is not pressed down,
- in all cases within approximately 15 minutes if the doors remain open,
- when the ignition is switched on,
- when the vehicle is locked.

Boot lamp

This is located in the centre of the torch base.
The lamp operates in accordance with the three positions of the switch below.

Permanently on.

In this **"AUTO"** position, it comes on gradually when the vehicle is unlocked and when a rear door or the tailgate is opened.
It switches off automatically, after a few minutes, if a rear door or the tailgate remains open, or when the ignition is switched on.

Permanently off.

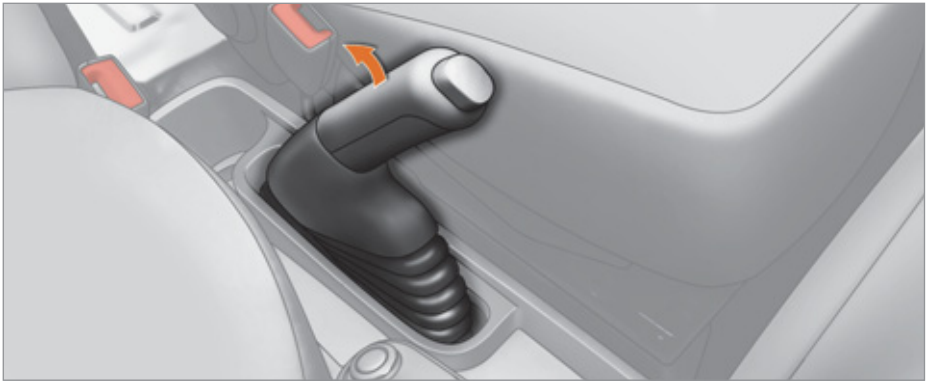

PARKING BRAKE

Applying

Pull the parking brake lever up to immobilise your vehicle.
Check that the parking brake is applied firmly before leaving the vehicle.

If the parking brake is still on or has not been released properly, this is indicated by this warning lamp which comes on on the instrument panel.

When parking on a slope, direct your wheels towards the pavement and pull the parking brake lever up.
There is no advantage in engaging a gear after parking the vehicle, particularly if the vehicle is loaded.

Releasing

Pull the lever and press the button to lower the parking brake lever.

HAZARD WARNING LIGHTS

Press this button, the two direction indicators flash.
They operate with the ignition off.
When the hazard warning lights are switched on, the change of direction function, via the right-hand or left-hand direction indicator, is deactivated.

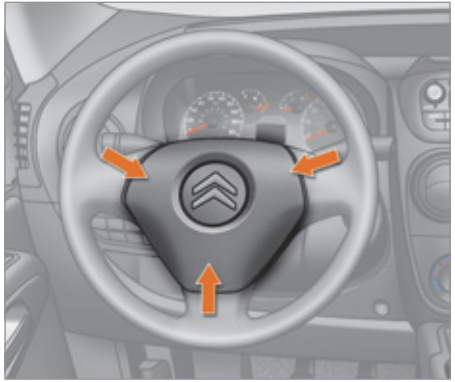

HORN

Press the centre of the steering wheel.

BRAKING ASSISTANCE SYSTEMS

Group of supplementary systems which help you to obtain optimum braking in complete safety in emergency situations:

- anti-lock braking system (ABS),
- electronic brake force distribution (EBFD),
- emergency braking assistance (EBA).

Anti-lock braking system and electronic brake force distribution

Linked systems which improve the stability and manoeuvrability of your vehicle when braking, in particular on poor or slippery surfaces.

Activation

The anti-lock braking system comes into operation automatically when there is a risk of wheel lock.
Normal operation of the ABS may make itself felt by slight vibration of the brake pedal accompanied by some noise.

When braking in an emergency, press very firmly without releasing the pressure.

Operating fault

If this warning lamp comes on, accompanied by an audible signal and a message in the instrument panel screen, it indicates a fault with the anti-lock braking system which could result in loss of control of the vehicle when braking.

If this warning lamp comes on, together with the **ABS** warning lamp, accompanied by a message in the instrument panel screen, it indicates a fault with the electronic brake force distribution which could result in loss of control of the vehicle when braking.
You must stop as soon as it is safe to do so.

In either case, contact a CITROËN dealer or a qualified workshop.

For maximum braking efficiency, a bedding-in period of around 300 miles (500 kilometres) is needed. During this period it is recommended that you avoid harsh, repeated or prolonged braking.

Good practice

The ABS system does not provide shorter braking distances. On very slippery surfaces (black ice, oil...) the ABS can extend braking distances. For emergency braking, press the brake pedal hard and do not release it, even on a slipper surface; you will then be able to steer the vehicle and avoid an obstacle.
When replacing wheels (tyres and rims), ensure that they conform to the manufacturer's recommendations.

Emergency braking assistance*

System which, in an emergency, enables you to reach the optimum braking pressure more quickly, thus reducing the stopping distance. The emergency braking assistance is an integral part of the ESP system.

Activation

It is brought into play by the speed at which the brake pedal is pressed.
The effect of this is a reduction in the resistance of the pedal and an increase in braking efficiency.
When braking in an emergency, press firmly without releasing the pressure.

Good practice

This system cannot be deactivated by the driver.

* Depending on country of sale.

TRAJECTORY CONTROL SYSTEMS

Electronic stability programme (ESP)

The electronic stability programme acts on the brake of one or more wheels and on the engine to keep the vehicle on the trajectory required by the driver, within the limits of the laws of physics.

Activation

The ESP system is activated automatically each time the vehicle is started and cannot be deactivated.
It comes into operation in the event of a grip or trajectory problem.

This is indicated by flashing of this warning lamp in the instrument panel.

Operating fault

Illumination of this warning lamp and the warning lamp in the **"ASR OFF"** button, accompanied by a message in the instrument panel screen, indicates a fault with the ESP system, which is deactivated automatically.
Have it checked by a CITROËN dealer or a qualified workshop.

Anti-slip regulation (ASR) and engine control (MSR)

Anti-slip regulation (also known as traction control) optimises traction, avoiding wheel spin by acting on the brakes of the driving wheels and the engine.
Engine control is an integral part of the ASR system and intervenes when a sudden gear change is made or of one of the driving wheels looses grip, by reducing engine torque to avoid loss of stability of the vehicle.

Activation

These systems are activated automatically every time the vehicle is started.
In the event of a problem od adhesion or trajectory, these systems come into play.

Deactivation

In exceptional conditions (starting a vehicle which is bogged down, stuck in snow, on soft ground...), it may be advisable to deactivate the ASR system, so that the wheels can spin freely and regain grip.

☞ Press the **"ASR OFF"** button, located in the middle of the dashboard.

If the button's warning lamp comes on, accompanied by a message in the instrument panel screen, this indicates that the ASR system is deactivated.

Reactivation

The ASR system is reactivated automatically every time the ignition is switched back on.

☞ Press the **"ASR OFF"** button again to reactivate it manually.

Operating fault

If this warning lamp comes on, accompanied by a message in the instrument panel screen, this indicates a fault with the ASR system, which is deactivated automatically. Have it checked by a CITROËN dealer or a qualified workshop.

Good practice

The ASR system offers exceptional safety in normal driving, but this should not encourage the driver to take extra risks or drive at high speed.
The correct functioning of this system depends on observation of the manufacturer's recommendations regarding the wheels (tyres and rims), the braking components, the electronic components and assembly and repair procedures.
After an impact, have these systems checked by a CITROËN dealer or a qualified workshop.

Intelligent Traction Control

System to improve traction on slippery surfaces (snow, black ice, mud...).
This system checks for situations of difficult surface adhesion that could make it difficult to move off or make progress.
In these situations, **Intelligent Traction Control** takes over from the **ASR** system, by transferring drive to the wheel with the best grip on the ground to provide the best traction and trajectory control.

Activation

On starting the vehicle, the system is deactivated.
Press the button, located on the dashboard, to activate the system; the warning lamp in the button comes on.
The system is active up to about 18 mph (30 km/h).
Once the speed exceed 18 mph (30 km/h, the system is deactivated automatically, but the warning lamp in the button comes on.
The system is reactivated automatically as soon as the speed drops below 18 mph (30 km/h).

Deactivation

Press the button, located on the dashboard, to deactivate the system; the warning lamp in the button goes off and the **ASR** system is active again.

Operating fault

This warning lamp comes on in the instrument panel if there is a fault with the system.

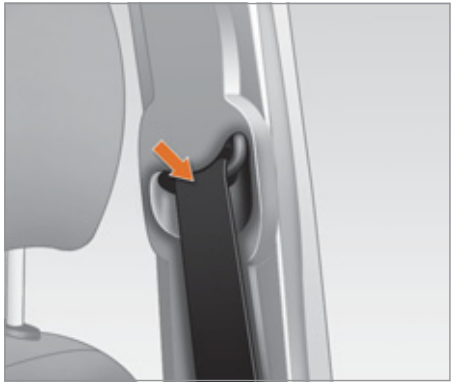

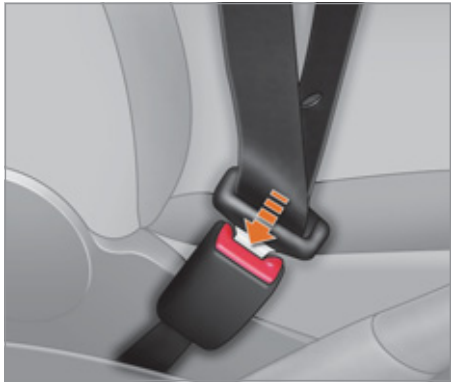

FRONT SEAT BELTS

The front seats are fitted with pre-tensioners and force limiters.

Fastening

Pull the strap, then insert the tongue into the buckle.
Check that the seat belt is fastened correctly by pulling the strap.
The lap belt must be positioned as low as possible on the pelvis. The chest belt must pass over the hollow of the shoulder.

if the driver's seat belt is unfastened, the START mode of Stop & Start will not be invoked. The engine can only be restarted using the ignition key.

Inertia reel seat belts

These are fitted with a device which locks automatically in the event of a collision or emergency braking.
Safety in the event of a front impact has been improved by the introduction of pretensioning and force limiting seat belts.
Depending on the seriousness of the impact, the pretensioning system instantly tightens the seat belt against the body of the occupant.
The pretensioning seat belts are active when the ignition is on.
The force limiter reduces the pressure of the seat belt against the body of the occupant in the event of an accident.

Driver's seat belt not fastened warning lamp

When the vehicle is started, this warning lamp comes on if the driver has not fastened their seat belt.

REAR SEAT BELTS (COMBI)

The 3-seat bench is fitted with three-point inertia reel seat belts with force limiter.
The centre seat has a seat belt guide and inertia reel, integrated with the seat back.

When a seat belt is not in use, you can store its buckle in the housing provided in the bench seat cushion.

Good practice

The driver must ensure that all passengers fasten their seat belts correctly.
Wherever you are seated in the vehicle, always fasten your seat belt, even for short journeys.
The seat belts are fitted with an inertia reel which automatically adjusts the length of the strap to your size. The seat belt is reeled in automatically when not in use.
Ensure that the seat belt has reeled in correctly after use.
After folding or moving a seat, ensure that the seat belt has reeled in correctly into its compartment and that the buckle is ready to accommodate the tongue.

Depending on the nature and seriousness of any impact, the pretensioning device may be deployed before and independently of inflation of the airbags. It instantly tightens the seat belts against the body of the occupants.
The deployment of the pretensioners is accompanied by a slight discharge of harmless smoke and a noise, due to the activation of the pyrotechnic cartridge incorporated in the system.

The force limiter reduces the pressure of the seat belt against the body of the occupants.
The equipment fitted to these seat belts is operational when the ignition is switched on.
The inertia reels are fitted with a device which automatically locks the strap in the event of a collision or emergency braking or if the vehicle rolls over.

The airbag warning lamp comes on if the pretensioners are deployed. Contact a CITROËN or a qualified workshop.

In order to be effective, a seat belt must:
- restrain one person only,
- must not be twisted, check by pulling in front of you with an even movement,
- be tightened as close to the body as possible.

The upper part of the seat belt should be positioned in the hollow of the shoulder.
The lap part should be placed as low as possible on the pelvis.
Do not invert the seat belt buckles as they will not fulfil their role completely. If the seats are fitted with armrests, the lap part of the seat belt should always pass under the armrest.
Check that the seat belt is fastened correctly by pulling the strap firmly.

Recommendations for children:
- use a suitable child seat if the passenger is less than 12 years old or less than one and a half metres tall,
- never allow a child to travel on your lap, even with the seat belt fastened.

For further information regarding child seats, refer to the "Children on board" section of chapter 5.

In accordance with current safety regulations, for all work on your vehicle, refer to a qualified workshop that has the skills an equipment needed, all of which can be provided by a CITROËN dealer.
Have the seat belts checked regularly (even after a minor impact) by a CITROËN dealer or a qualified workshop: they must not show any signs of wear, cutting or fraying and they must not be transformed or modified.

Clean the seat belt straps with soapy water or a textile cleaning product, available from CITROËN dealers.

Airbags only operate when the ignition is switched on.

This equipment only operates once. If a second impact occurs (during the same or a subsequent accident), the airbag will not operate.

The triggering of an airbag or airbags is accompanied by a slight discharge of harmless smoke and a noise, due to the activation of the pyrotechnic cartridge incorporated in the system.

This smoke is not harmful, but sensitive individuals may experience some irritation.

The noise of the detonation may result in a slight loss of hearing for a short time.

AIRBAGS

The airbags have been designed to maximise the safety of the occupants in the event of a serious collision; they work in conjunction with the force limiting seat belts.

In the event of a serious collision, the electronic detectors record and analyse the front and side impacts suffered in the impact detection zones:

- in the event of a serious impact, the airbags inflate instantly and protect the occupants of the vehicle. Immediately after the impact, the airbags deflate rapidly, so that they do not hinder the visibility of the occupants nor their possible exit from the vehicle.
- in the event of a minor or rear impact and in certain roll-over conditions, the airbags will not be deployed; the seat belt alone is sufficient to provide maximum protection in these situations.

The seriousness of the collision depends on the nature of the obstacle and the speed of the vehicle at the moment of impact.

It is imperative that the passenger airbag is disarmed if a child seat is installed facing rearwards. Refer to the "Children on board" section of chapter 5.

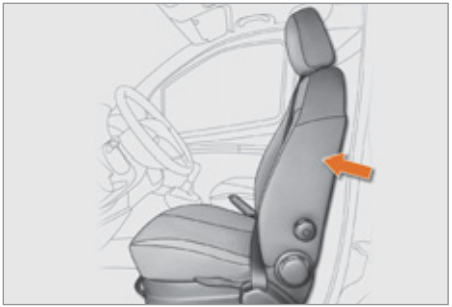

LATERAL AIRBAGS

Deployment

It is deployed unilaterally in the event of a serious side impact, perpendicular to the longitudinal centreline of the vehicle on a horizontal plane and directed from the outside towards the inside of the vehicle. The lateral airbag inflates between the front occupant of the vehicle and the corresponding door trim panel.

In the event of a minor impact or bump on the side of the vehicle or if the vehicle rolls over, the airbag may not be deployed.

Operating fault

If this warning lamp comes on in the instrument panel, contact a CITROËN dealer or a qualified workshop without delay to have the system checked. The airbags may no longer be deployed in the event of a serious impact.

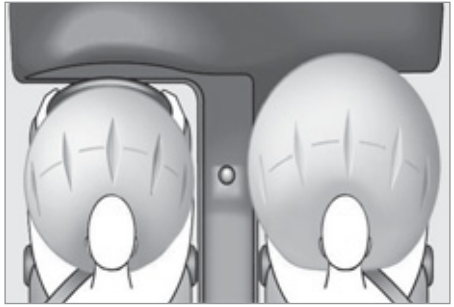

FRONT AIRBAGS

The front airbags are fitted in the centre of the steering wheel for the driver and in the dashboard for the front passenger.

Deployment

They are deployed simultaneously, unless the passenger's front airbag has been deactivated, in the event of a serious front impact.
The front airbag inflates between the front occupant of the vehicle and the dashboard to cushion their forward movement.

Deactivation

Only the passenger's front airbag can be deactivated. The airbag is deactivated from the trip computer.

Refer to the "MENU" section of chapter 3, then select **OFF** on the "Passenger airbag" menu.

The airbag warning lamp in the instrument panel is on while the airbag is deactivated.

To assure the safety of your child, you must deactivate the passenger airbag when you install a rear-facing child seat on the front passenger seat. Otherwise, the child would risk being killed or seriously injured if the airbag were to inflate.

Operating fault

If this warning lamp comes on in the instrument panel, accompanied by an audible signal and a message in the screen, contract a CITROËN dealer or a qualified workshop without delay to have the system checked.
The airbags may no longer be deployed in the event of a serious impact.

If the two airbag warning lamps are on continuously, do not install a rear-facing child seat.
Have it checked by a CITROËN dealer or a qualified workshop.

For the airbags to be fully effective, observe the following safety rules:

Sit in a normal upright position.
Wear a correctly adjusted seat belt.
Do not leave anything between the occupants and the airbags (a child, pet, object...). This could hamper the operation of the airbags or injure the occupants.
After an accident or if the vehicle has been stolen or broken into, have the airbag systems checked.
All work on the airbag systems must be carried out by a CITROËN or a qualified workshop.
Even if all of the precautions mentioned are observed, a risk of injury or of slight burns to the head, chest or arms when an airbag is deployed cannot be ruled out. In fact, the bag inflates almost instantly (within a few milliseconds) then deflates within the same time, discharging the hot gas through openings provided for this purpose.

Front airbags

Do not drive holding the steering wheel by its spokes or resting your hands on the centre part of the wheel.
Passengers must not place their feet on the dashboard.
Smoke as little as possible as deployment of the airbags can cause burns or the risk of injury from a cigarette or pipe.
Never remove or pierce the steering wheel or hit it violently.

Lateral airbags

Only put approved covers on the seats, compatible with the deployment of lateral airbags. For information on the range of seat covers suitable for your vehicle, you can contact a CITROËN dealer. Refer to the "Accessories" section.
Do not fix or attach anything to the seat backs. This could cause injury to the chest or arms when the lateral airbag inflates.
Do not sit with the upper part of the body any nearer to the door than necessary.

GENERAL POINTS RELATING TO CHILD SEATS

Although one of CITROËN's main criteria when designing your vehicle, the safety of your children also depends on you.
For maximum safety, please follow these precautions:

- in accordance with European regulations, **all children under the age of 12 or less than one metre fifty tall must travel in approved child seats suited to their weight**, on seats fitted with a seat belt or ISOFIX mountings.
- **statistically, the safest seats in your vehicle for the transportation of children are the rear seats,**
- **a child weighing less than 9 kg must travel in the "rearwards-facing" position in the front.**

CITROËN recommends that children should travel in the **rear seats** of your vehicle:

- **"rearwards-facing" up to the age of 2**,
- **"forwards-facing"from the age of 2.**

INSTALLING A CHILD SEAT USING A THREE POINT SEAT BELT

"Rearwards-facing"

Do not forget to disarm the airbag before installing the child.
When a "rearwards-facing" child seat is installed on the **front passenger seat**, it is essential that the passenger airbag is disarmed. Otherwise, **the child would risk being seriously injured or killed if the airbag were to inflate**.

"Forwards-facing"

When a "forwards-facing" child seat is installed on the **front passenger seat**, leave the passenger airbag armed.

The rules for transporting children are specific to each country. Consult the current legislation in your country.

Please consult the list of seats approved in your country. The Isofix mountings, the rear seats, the passenger airbag and the disarming of this airbag depend on the version sold.

To disarm or activate the passenger airbag, refer to Chapter 3, "MENU".

The child seats function is shared by the entire CITROËN range. However, each individual model has its own special features.
If your vehicle is fitted with this function, the passenger airbag must be disarmed using the trip computer MENU button.
If your vehicle is not fitted with the passenger airbag disarming function, the installation of a "rear-facing" child seat on the vehicle's front seat is strictly prohibited.
The passenger must not travel with a child on his lap.

CHILD SEATS RECOMMENDED BY CITROËN

CITROËN offers a complete range of recommended child seats which are secured using a **three point seat belt**:

Group 0+: from birth to 13 kg			
	L1 "RÖMER Baby-Safe Plus" Installed in the rearwards-facing position.		
Groups 2 and 3: from 15 to 36 kg			
	L3 "RECARO Start"		**L4** "KLIPPAN Optima" From the age of 6 years (approximately 22 kg), the booster is used on its own.
	L5 "RÖMER KIDFIX" Can be fitted to the vehicle's ISOFIX mountings. The child is restrained by the seat belt.		

INSTALLING CHILD SEATS ATTACHED USING THE SEAT BELT (LIGHT VAN)

In accordance with European regulations, this table indicates the options for installing child seats secured using a seat belt and universally approved in accordance with the weight of the child and the seat in the vehicle.

Seat		**Weight of the child and indicative age**			
		Under 13 kg (groups 0 **(a)** and 0+) Up to approx 1 year	**From 9 to 18 kg** (group 1) 1 to 3 years approx	**From 15 to 25 kg** (group 2) 3 to 6 years approx	**From 22 to 36 kg** (group 3) 6 to 10 years approx
Front passenger seat **(b)**		**U**	**U**	**U**	**U**

a: Group 0: from birth to 10 kg. Infant car seats and "car cots" cannot be installed on the front passenger seat.
b: consult the legislation in force in your country before installing your child on this seat.
U: seat suitable for the installation of a child seat secured using a seat belt and universally approved, "rear facing" and/or "forward facing".

INSTALLING CHILD SEATS ATTACHED USING THE SEAT BELT (COMBI)

In accordance with European regulations, this table indicates the options for installing child seats secured using a seat belt and universally approved in accordance with the weight of the child and the seat in the vehicle.

Seat		Weight of the child and indicative age			
		Under 13 kg (groups 0 (**a**) and 0+) Up to approx 1 year	**From 9 to 18 kg** (group 1) 1 to 3 years approx	**From 15 to 25 kg** (group 2) 3 to 6 years approx	**From 22 to 36 kg** (group 3) 6 to 10 years approx
Front passenger seat (**b**)		**U**	**U**	**U**	**U**
Rear side seats		**U**	**U**	**U**	**U**
Rear centre seat		**U**	**U**	**U**	**U**

a: Group 0: from birth to 10 kg. Infant car seats and "car cots" cannot be installed on the front passenger seat.
b: consult the legislation in force in your country before installing your child on this seat.
U: seat suitable for the installation of a child seat secured using a seat belt and universally approved, "rear facing" and/or "forward facing".

ADVICE ON CHILD SEATS

The incorrect installation of a child seat in a vehicle compromises the child's protection in the event of an accident.
Remember to fasten the seat belts or the child seat harnesses **keeping the slack** in relation to the child's body **to a minimum**, even for short journeys.
For optimum installation of the "forward facing" child seat, ensure that the back of the child seat is in contact with the back of the vehicle's seat and that the head restraint does not cause any discomfort.
If the head restraint has to be removed, ensure that it is stored or attached securely to prevent it from being thrown around the vehicle in the event of sharp braking.

Children under the age of 10 must not travel in the "forward facing" position on the front passenger seat, unless the rear seats are already occupied by other children, cannot be used or are absent.
Deactivate the passenger's airbag when a "rear facing" child seat is installed on the front seat.
Otherwise, the child would risk being seriously injured or killed if the airbag were to inflate.

Installing a booster seat

The chest part of the seat belt must be positioned on the child's shoulder without touching the neck.
Ensure that the lap part of the seat belt passes correctly over the child's thighs.
CITROËN recommends the use of a booster seat which has a back, fitted with a seat belt guide at shoulder level.
As a safety precaution, do not leave:

- one or more children alone and unsupervised in a vehicle,
- a child or an animal in a vehicle which is exposed to the sun, with the windows closed,
- the keys within reach of children inside the vehicle.

To prevent accidental opening of the doors, use the "Child lock".

To protect young children from the sun, fit side blinds on the rear windows.

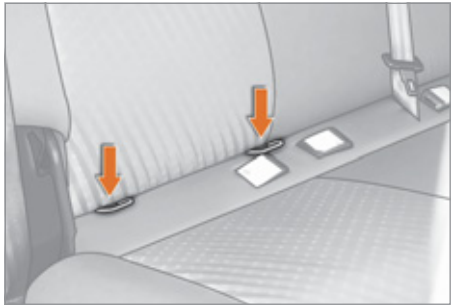

"ISOFIX" MOUNTINGS

Your vehicle has been approved in accordance with the new ISOFIX regulation.
The mountings comprise three rings for each rear bench side seat:

- two front rings, located between the vehicle seat back and cushion,
- a rear ring, for securing the upper strap referred to as the TOP TETHER.

This ISOFIX mounting system provides fast, reliable and safe fitting of the child seat in your vehicle.
The ISOFIX child seats are fitted with two latches which are secured easily on the two front rings.

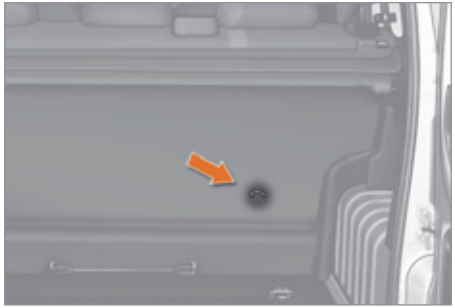

Some also have an upper strap which is attached to the rear ring.
To attach this strap, raise the vehicle seat's head restraint then pass the hook between its rods. Then fix the hook on the rear ring and tighten the upper strap.

The incorrect installation of a child seat in a vehicle compromises the child's protection in the event of an accident.

ISOFIX CHILD SEAT RECOMMENDED BY CITROËN AND APPROVED FOR YOUR VEHICLE

ISOFIX RÖMER Duo Plus (size category **B1**)
Group 1: from 9 to 18 kg
Installed in the forward facing position. Fitted with an upper strap to be secured on the ISOFIX upper ring, referred to as the TOP TETHER. Three seat body angles: sitting, reclining, lying.

This child seat can also be used on seats which are not fitted with ISOFIX mountings.
In this case, it must be attached to the vehicle seat using the three point seat belt.
Follow the instructions for fitting the child seat given in the seat manufacturer's installation guide.

LOCATIONS FOR THE INSTALLATION OF ISOFIX CHILD SEATS (COMBI)

In accordance with European regulations, this table indicates the options for the installation of ISOFIX child seats on the vehicle seats fitted with ISOFIX mountings.
In the case of the universal and semi-universal ISOFIX child seats, the child seat's ISOFIX size category, determined by a letter from **A** to **G**, is indicated on the child seat next to the ISOFIX logo.

	Weight of the child//indicative age									
	Less than 10 kg (group 0) Up to 6 months approx		**Less than 10 kg (group 0) Less than 13 kg (group 0+)** Up to 1 year approx			**From 9 to 18 kg (group 1)** From 1 to 3 years approx				
Type of ISOFIX child seat	**Infant car seat***		**"rear facing"**			**"rear facing"**		**"forward facing"**		
ISOFIX size category	**F**	**G**	**C**	**D**	**E**	**C**	**D**	**A**	**B**	**B1**
Universal and semi-universal ISOFIX child seats which can be installed on the outer rear seats	**X**		**IL-SU**			**IL-SU**		**IUF**		

IUF: seat suitable for the installation of an **I**sofix **U**niversal seat, "**F**orward facing" and secured using the "Top Tether" upper strap.
IL-SU: seat suitable for the installation an **I**sofix **S**emi-**U**niversal seat which is:
- "rear facing" fitted with a "Top Tether" upper strap or a stay,
- "forward facing" fitted with a stay,

For the securing of the "Top Tether" upper strap, refer to the "Isofix Mountings" section.
X: seat which is not suitable for the installation of an ISOFIX seat of the size category indicated.

* Infant car seats and "car cots" cannot be installed on the front passenger seat.

TOWING A TRAILER, CARAVAN, ETC...

Driving advice

A towed vehicle must free wheel: gearbox in neutral.
Cooling: towing a trailer on a slope increases the coolant temperature.

As the fan is electrically controlled, its cooling capacity is not dependent on the engine speed.
On the contrary, use a high gear to lower the engine speed and reduce your speed.

In all cases, pay attention to the coolant temperature.

In certain cases of particularly arduous use (towing the maximum load up a steep slope in high temperatures), the engine automatically limits its power. In this case, automatic cutting off of the air conditioning allows the engine power to be saved.

If the coolant temperature warning lamp comes on, stop the vehicle and switch off the engine as soon as possible.

See the "Levels" section of chapter 7.

Tyres: check the tyre pressures of the towing vehicle (see the "Identification markings" section of chapter 7) and of the trailer, observing the recommended pressures.

Brakes: towing increases the braking distance. Drive at a moderate speed, change down early and brake gradually.

Side wind: sensitivity to side wind is increased. Drive smoothly and at a moderate speed.

ABS: the system only controls the vehicle, not the trailer.

Rear parking sensors: the sensors will be deactivated automatically when an genuine CITROËN towbar is used (see the "Rear parking sensors" section of chapter 3).

Distribution of loads

Distribute the load in the trailer so that the heaviest objects are as close as possible to the axle and the nose weight is close to the maximum authorised without, however, exceeding it. The air density decreases with altitude, so reducing the performance of the engine. The maximum towed load must be reduced by 10 % for each 1 000 metres of altitude. Refer to the "Technical data" chapter for details of the weights and towed loads applicable to your vehicle and also to the administrative documents (V5 registration document, ...).

Towbar

We recommend the use of original CITROËN towbars and their harnesses, which have been tested and approved from the design stage of your vehicle, and that the fitting of this equipment is entrusted to a CITROËN dealer or a qualified workshop.
If this equipment is not fitted by a CITROËN dealer, it is essential that it is fitted using the electrical pre-equipment located at the rear of the vehicle and following the manufacturer's instructions.
The operation of the rear parking sensors is deactivated automatically when the trailer cable connector is inserted in the towbar socket.
When the trailer cable is removed, the rear parking sensors are re-activated.

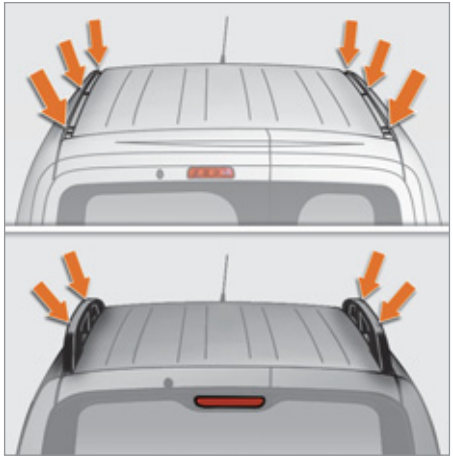

ROOF RACK AND ROOF BARS

To install the transverse roof bars or a roof rack, use the fixings provided for this purpose.
Maximum load: 75 kg.

Never exceed the gross vehicle weight (GVW).

OTHER ACCESSORIES

A wide range of accessories and original parts is offered by the CITROËN network. These accessories and parts have been tested and approved both for reliability and for safety.
They all benefit from CITROËN's recommendation and warranty.

Range of professional equipment

The replacement parts department publishes an accessories catalogue offering various equipment and fittings, such as:

- wooden protective floor, non-slip wooden floors, wooden side protectors, glass protection grilles,
- roof rack, set of transverse roof bars, loading roller,
- towbars, towbar harnesses with 7/13 sockets, 7/7 sockets, 13 socket...

When fitting a towbar and harness outside the CITROËN dealer network, the installation must be done using the electrical pre-equipment on the vehicle and following the manufacture's recommendations.

The fitting of electrical equipment or accessories not listed by CITROËN may result in the failure of your vehicle's electronic system or high consumption. Please note this specific warning. You are advised to contact a representative of CITROËN to be shown the range of recommended equipment and accessories. Depending on the country in which the vehicle is sold or operated, it may be compulsory to have a high visibility vest, warning triangle, replacement bulbs and fuses available in the vehicle.

Before installing accessory radio communication transmitters with external aerial on your vehicle, you can contact a CITROËN dealer, who will provide the specification (frequency band, maximum output power, aerial position, specific installation conditions) of the transmitters which can be fitted, in accordance with the Motor Vehicle Electromagnetic Compatibility Directive (2004/104/EC).

Range of accessories for private vehicles

Another range is also available from CITROËN dealers.

"Comfort":

insulated module, coat hanger fixed to a head restraint, reading lamp, rear parking sensors...

"Transport solutions":

boot liner, rear door net, set of transverse and longitudinal roof bars, roof boxes...

"Style":

embellishers, secure wheel embellishers...

"Security and safety":

anti-intrusion alarm, window etching, breathalyzer, first aid kit, high visibility vest, warning triangle, child seats and booster cushions, snow chains...

"Protection":

rubber mats, over-carpets, 3D mats, seat covers compatible with lateral airbags, sets of front and rear mudflaps...

To avoid any risk of jamming of the pedals:

- ensure that the mat is positioned and secured correctly,
- never fit one mat on top of another.

"Multimedia":

audio systems, hands-free kit, speakers, portable satellite navigation systems, speed camera detectors, Wi-Fi on board...

By going to a CITROËN dealer, you can also obtain cleaning and maintenance products (interior and exterior) - including ecological products from the "TECHNATURE" range - products for topping up (screenwash...), touch-up pens and paint aerosols for the exact colour of your vehicle, recharges (cartridge for the temporary puncture repair kit...), ...

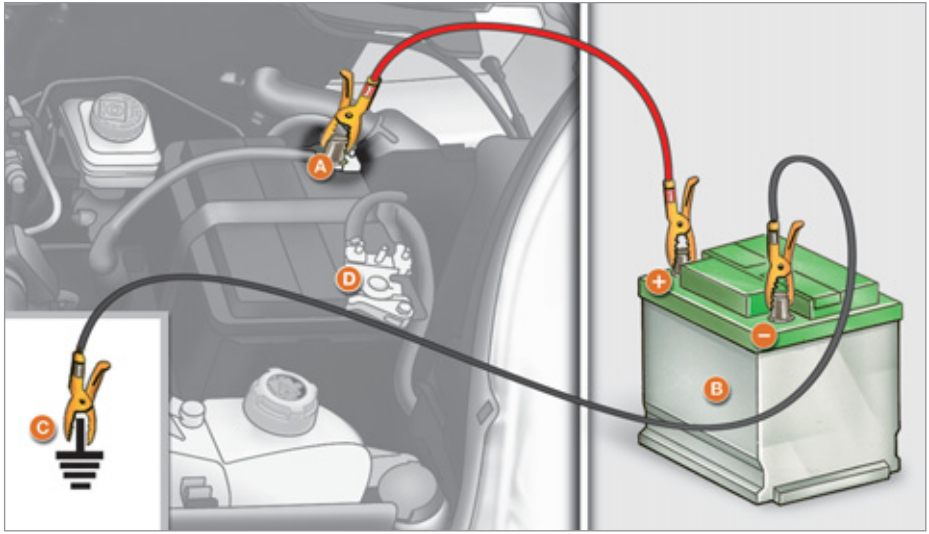

BATTERY

Models without Stop & Start

A. Metallic positive point of your vehicle.

B. Slave battery.

C. Earth of your vehicle.

D. Metallic positive point on your vehicle.

Charging the battery using a battery charger

Never charge a battery without first disconnecting the terminals.

- Disconnect the two quick-fit battery terminals.
- Follow the instructions for use given by the battery charger manufacturer.
- Check that the battery posts and terminals are clean. If they are covered with sulphate (white or greenish deposit), disconnect them and clean them.
- Reconnect the two quick-fit terminals, starting with the negative (-) terminal.

Starting using another battery

- Connect the red cable to the metallic point **A** then to the positive (+) terminal of the slave battery **B**.
- Connect one end of the green or black cable to the negative (-) terminal of the slave battery **B**.
- Connect the other end of the green or black cable to the earth point **C** on your vehicle (never to the metallic point **D** of your vehicle).
- Operate the starter, let the engine run.
- Wait for the engine to return to idle, then disconnect the cables.

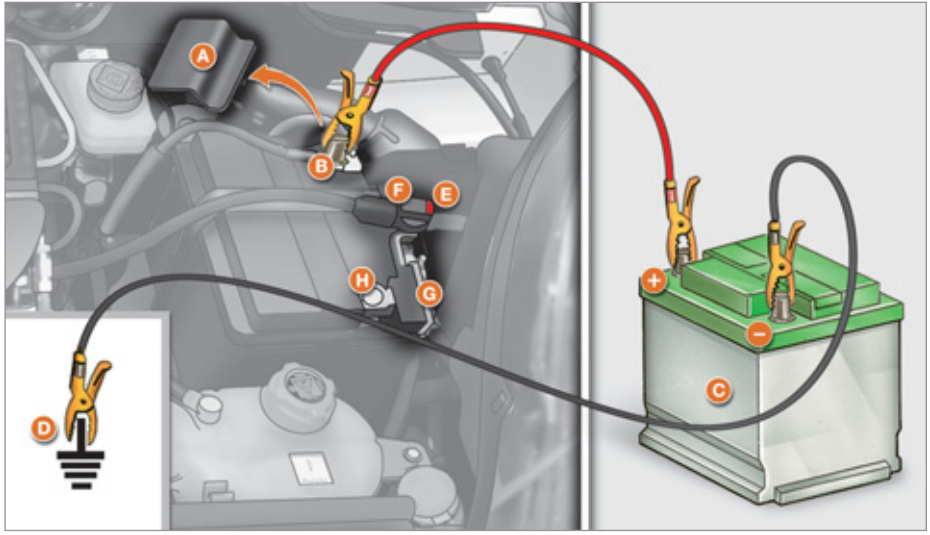

Models with Stop & Start

A. Protective cover.

B. Positive metallic point on your vehicle.

C. Slave battery.

D. Earth on your vehicle.

E. Terminal release button.

F. Check sensor button.

G. State of charge sensor.

H. Metal negative point of your vehicle.

Charging the battery using a battery charger

Do not disconnect the battery to charge it.

- Press the release button **E** to disconnect the terminal **F**.
- Disconnect the connector **F** of the check sensor **G**.
- Remove the protective cover **A** from the metallic point **B**.
- Connect the charger cables: (+) on the metallic point **B**; (-) on the metallic point **H**.
- Follow the instructions for use given by the battery charger manufacturer.
- Check that the battery posts and terminals are clean. If they are covered with sulphate (white or greenish deposit), disconnect them and clean them.
- Reconnect connector **F** of the check sensor **G**.
- Refit the protective cover **A** to the metallic point **B**.

Never remove the check sensor **G** from the metallic point **H**, except when replacing the battery.

Starting using another battery

- Remove the protective cover **A** from the metallic point **B**.
- Connect the red cable to metallic point **B**, then the (+) terminal to the slave battery **C**.
- Connect one end of the green or black cable to the (-) terminal of the slave battery **C**.
- Connect the other end of the green or black cable to the earth point **D** of your vehicle (never to the metallic point **H** of your vehicle).
- Operate the starter, let the engine run.
- Wait for the engine to return to idle, then disconnect the cables.
- Refit the protective cover **A** to the metallic point **B**.

The presence of this label, in particular with the Stop & Start system, indicates the use of a 12 V lead-acid battery with special technology and specification; the involvement of a CITROËN dealer or a qualified workshop is essential when replacing or disconnecting the battery. Failure to observe this recommendation may cause premature wear of the battery.

After refitting the battery by a CITROËN dealer or a qualified workshop, the Stop & Start system will only be active after a continuous period of immobilisation of the vehicle, a period which depends on the climatic conditions and the state of charge of the battery (up to about 8 hours).

It is advisable to disconnect the battery if the vehicle is not to be used for a period of more than one month. To do this on models with Stop & Start:

- press the release button **E** to disconnect connector **F**,
- disconnect connector **F** of check sensor **G**.

Never remove the check sensor **G** from the metallic point **H**, except when replacing the battery.

Before charging

The charging operation must be carried out in a ventilated area away from naked flames or any possible sources of sparks to eliminate the risks of explosion and fire.
Do not attempt to charge a frozen battery: it must first be thawed to eliminate the risks of explosion. If the battery has frozen, before charging it have it checked by a specialist who will check that the internal components have not been damaged and that the container is not cracked, which could mean that there is a risk of a leak of toxic and corrosive acid.

Before disconnecting

Never disconnect a terminal when the engine is running.
Before disconnecting the battery, you must wait for 2 minutes after switching off the ignition.
Close the windows and doors before disconnecting the battery.

After reconnecting

After every reconnection of the battery, switch on the ignition and wait 1 minute before starting to allow the electronic systems to be initialised. If difficulties are experienced after this, contact a CITROËN dealer or a qualified workshop.
If the battery has been disconnected for some time, it may be necessary to reinitialise the following functions:

- the display parameters (date, time, language, distance and temperature units),
- the radio stations,
- the central locking.

Some settings are cleared and must be reprogrammed. Contact a CITROËN dealer or a qualified workshop.

Batteries contain harmful substances such as sulphuric acid and lead. They must be disposed of in accordance with the law and must not, in any circumstances be discarded with household waste.
Take used batteries to an authorised waste disposal site.

CHANGING A WHEEL

Parking the vehicle

As far as possible, park the vehicle on level, stable and non-slippery ground.
Apply the parking brake, switch off the ignition and engage first gear (on a hill).
It is imperative that you ensure that the occupants get out of the vehicle and wait in a safe location.
If possible, place a chock under the wheel diagonally opposite the wheel to be changed.

Tools

The tools required are stored in a tool kit located behind the driver's seat (Light van) or behind the rear bench seat (Combi).

1. Wheelbrace.
2. Centring guide.
3. Screwdriver.
4. Jack with handle.
5. Removable towing eye.

The jack and all of the tools are specific to your vehicle. Do not use them for other purposes.
Never go underneath the vehicle when it is raised only by the jack; use an axle stand.

Taking out the spare wheel

The spare wheel retaining bolt is located on the rear left part of the loading sill.

1. Slacken the wheel retaining bolt using the wheelbrace.
2. Unscrew fully to unwind the winch cable.
3. Take out the spare wheel using the wheelbrace.
4. Raise the cover **A**.
5. Remove the cable **B** from its housing.
6. Release the spare wheel and place it near the wheel to be changed.

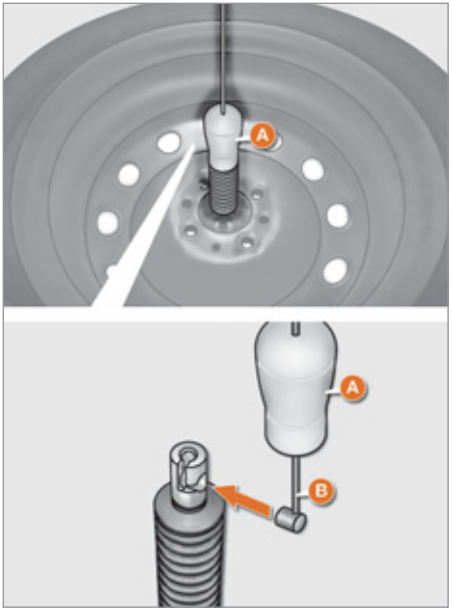

Putting the wheel back in place

1. Install the support on the wheel.
2. Place the cable **B** in position.
3. Lower the cover **A**.
4. Position the wheel.
5. Turn the wheelbrace clockwise to raise the spare wheel completely.

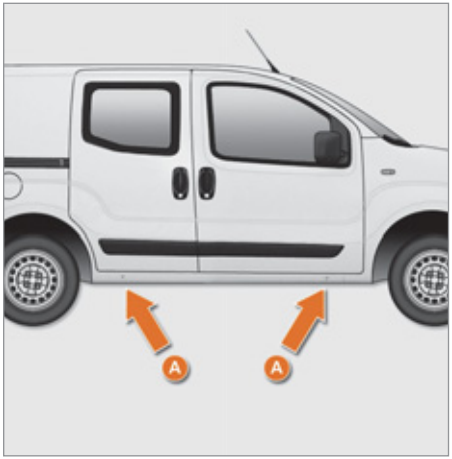

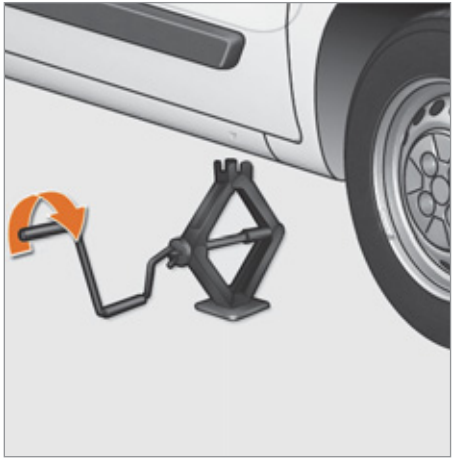

Removing a wheel

1. Park the vehicle on level, stable and non-slippery ground. Apply the parking brake. Switch off the ignition and engage first gear or reverse, depending on the slope.
2. Detach the wheel trim (large model) using the wheelbrace **1**, pulling at the valve passage hole.

   Slide the screwdriver **3** into the notch on the trim (small model) and use the tool as a lever, pressing to unclip the trim.
3. Slacken the wheel bolts using the wheelbrace.
4. Position the jack underneath the body, in accordance with the illustration, at the mark **A** (on the sill) as close as possible to the wheel to be changed.
5. Extend the jack **4** until its base is in contact with the ground. Ensure that the centreline of the jack base is vertical in relation to the location used.
6. Raise the vehicle.
7. Remove the bolts and detach the wheel.

Refer to the "Identification markings" section of chapter 8 to locate the tyre label.
Have the tightening of the bolts and the pressure of the spare wheel checked by a CITROËN dealer or a qualified workshop without delay.

Also, have the original wheel repaired and refitted by a CITROËN dealer or a qualified workshop as soon as possible.

Refitting a wheel

1. Put the wheel in place using the centring guide **2** to assist you.
2. Screw in the 3 bolts by hand and remove the centring guide. Position the 4th bolt.
3. Pre-tighten using the wheelbrace **1**.
4. Fold the jack **4** and detach it.
5. Tighten the wheel bolts using the wheelbrace.
6. Put the trim back in place, starting by placing its notch facing the valve, and press with the palm of your hand.
7. Stow the tools and the wheel.
8. Check the wheel inflation pressure (see "Identification") and have the balance checked.

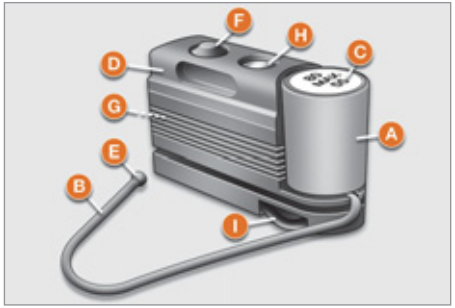

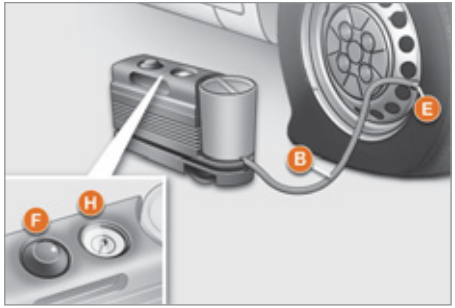

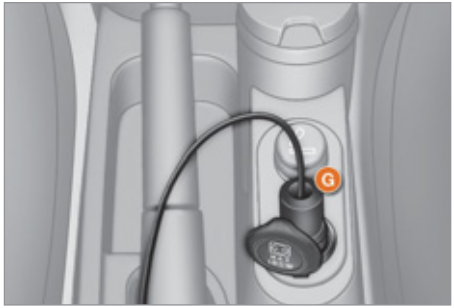

TEMPORARY PUNCTURE REPAIR KIT

This kit is located at the front of the passenger compartment. It consists of:

- a repair cartridge **A**, containing the sealant, equipped with:
  - a filling pipe **B**,
  - a sticker **C** indicating "max. 80 km/h", which the driver must affix to the dashboard in a visible position after repairing the tyre,
- a compressor **D** equipped with a pressure gauge and unions,
- adaptors for the inflation of various items,
- a pair of protective gloves,
- a quick guide to use of the temporary puncture repair kit.

This temporary puncture repair kit is available from CITROËN dealers.

It is provided for the repair of holes of a maximum diameter of 4 mm, located exclusively on the tread or side wall of the tyre. Avoid removing any foreign bodies which have penetrated into the tyre.

Repair procedure

- Apply the parking brake and place the gear lever in neutral.
- Unscrew the valve cap of the tyre to be repaired.
- Take out the filling pipe **B** and screw the ring **E** onto the tyre valve.
- Check that the on/off switch **F** on the compressor is in position **"0"** (off).
- Start the engine.
- Insert the connector **G** in the nearest 12 V accessory socket in the vehicle.
- Place the compressor's on/off switch **F** in position **"1"** (on).
- Inflate the tyre to a pressure of 3 bars.

To obtain a more accurate reading, you are advised to check the pressure value on the pressure gauge **H**, with the compressor off.

- If a pressure of at least **1.5 bars** is not reached within **5 minutes**:
  - disconnect the compressor from the valve and from the 12 V accessory socket,
  - move the vehicle forward by approximately 10 metres to distribute the filling fluid inside the tyre,
  - then repeat the inflation operation.
- If a pressure of at least **1.8 bars** is not reached within **10 minutes**:
  - stop the repair procedure; the tyre has suffered too much damage and cannot be repaired,
  - contact a CITROËN dealer or a qualified workshop.
- If the tyre has been inflated to a pressure of **3 bars**, set off again immediately.

After driving for approximately 10 minutes, stop and check the pressure of the tyre again.
Re-inflate the tyre to the correct pressure if necessary and contact a CITROËN dealer or a qualified workshop as soon as possible.
You must inform the technician that you have repaired the tyre using the temporary puncture repair kit and show him its instructions.

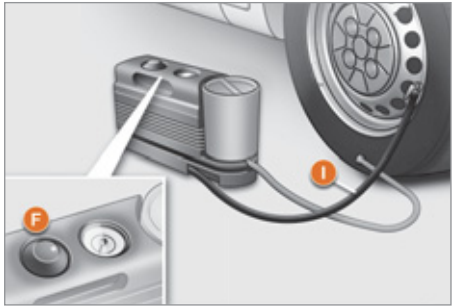

Checking and correcting the pressure

For checking and correcting the pressure of a tyre, use the compressor as follows:
- disconnect the pipe **I**,
- connect it directly to the tyre valve,

the cartridge will then be connected to the compressor and the sealant will not be injected.

If the tyre has to be deflated:
- connect the pipe **I** to the tyre valve,
- press the yellow button, located in the centre of the switch **F** on the compressor.

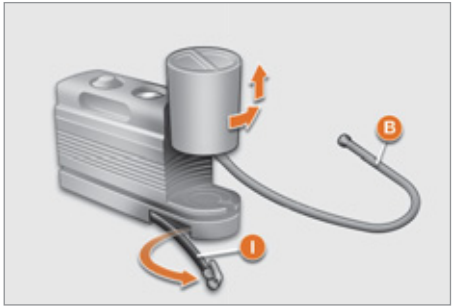

Replacing the repair cartridge

Disconnect the pipe **I**.
Turn the empty cartridge anticlockwise and lift it.
Insert the new cartridge and turn it clockwise.
Reconnect the pipe **I** and connect the pipe **B** in its location.

The repair cartridge contains ethylene-glycol, a product which is harmful if swallowed and which causes irritation to the eyes.
Keep this product out of reach of children.
After use, take the cartridge to a CITROËN dealer or to an authorised waste disposal site.

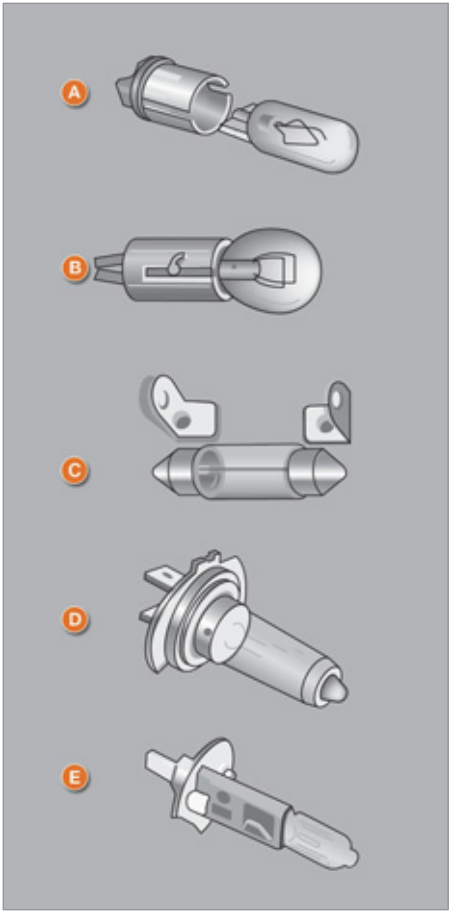

CHANGING A BULB

Types of bulb

Various types of bulb are fitted on your vehicle.
To remove them:

1. **Type A**

   Entirely glass bulb: pull gently as it is fitted by pressure.

2. **Type B**

   Bayonet bulb: press on the bulb then turn it anticlockwise.

3. **Type C**

   Cylindrical bulb: move aside the contacts.

4. **Type D -E**

   Halogen bulb: release the retaining spring from its housing.

High pressure washing

When using this type of washing on stubborn dirt, do not persist very long on the headlamps, or on other lamps and their edges to avoid damaging their coating and seals.

Front lamps

Open the bonnet. To access the bulbs, reach behind the headlamp unit.
Remove the protective covers to gain access to the bulbs.
Carry out the operations in reverse order to refit each bulb.

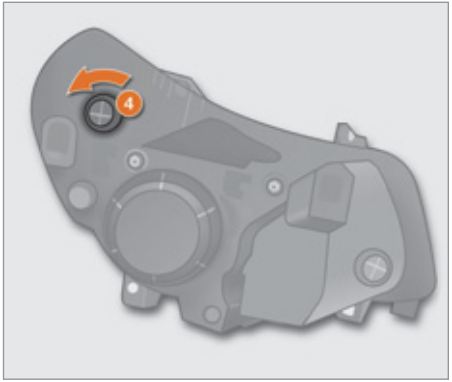

1 - Dipped beam headlamps

Type D, H4 - 55 W

- Remove the cover by turning it anticlockwise.
- Disconnect the electrical connector.
- Release the retaining spring by pressing on the two clips.
- Change the bulb taking care to align the metal part with the grooves on the lamp.

2 - Sidelamps

Type A, W 5 W - 5 W

- Remove the cover by turning it anticlockwise.
- Pull the bulb holder to gain access to the bulb.
- Change the bulb.

3 - Main beam headlamps

Type D, H4 - 55 W

- Remove the cover by turning it anticlockwise.
- Disconnect the electrical connector.
- Release the retaining spring by pressing on the two clips.
- Remove the bulb holder.
- Change the bulb taking care to align the metal part with the groove on the lamp.

4 - Direction indicators

Type B, PY 21 W - 21 W amber

- Turn the bulb holder a quarter turn anticlockwise.
- Remove the bulb by pressing it lightly while turning it anticlockwise.
- Change the bulb.

If you encounter any difficulty, consult a CITROËN dealer or a qualified workshop.

5 - Foglamps

Type E, H1 - 55 W

Contact a CITROËN dealer or a qualified workshop.

When each operation has been completed, check the operation of the lamps.

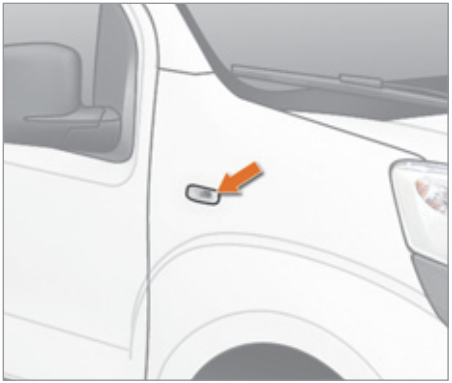

Direction indicator side repeaters

Type A, WY 5 W - 5 W amber

- Push the repeater rearwards and release it.
- Support the connector and turn the bulb holder a quarter of a turn to the left.
- Turn the bulb a quarter of a turn to the left.
- Pull the bulb then change it.
- When refitting, engage the repeater rearwards then move it forwards.

Front/rear courtesy lamps

Type C, 12 V 10 W - 10 W

- Release the courtesy lamp using a screwdriver.
- Remove the cover to gain access to the bulb.
- Change the bulb moving aside the two contacts.
- Ensure that the new bulbs are secured correctly between the two contacts.
- Close the protective flap.
- Fix the courtesy lamp in its housing and ensure that it is secured correctly.

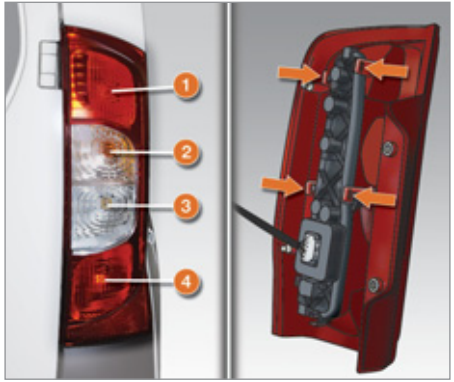

Rear lamps

For further information concerning the bulbs, refer to the table "Types of bulb".

1. **Brake lamps**
   Type B, P21 W - 21 W
2. **Direction indicators**
   Type B, PY 21 W - 21 W amber
3. **Reversing lamps**
   Type B, P21 W - 21 W
4. **Sidelamps/Foglamps**
   Type B, P4/21 W - 4 W/21 W

- Identify the faulty bulb then open the rear doors.
- Unscrew the two screws using the screwdriver supplied in the tool kit (behind the driver's seat) and extract the bulb holder.
- Release the lamp unit.
- Disconnect the electrical connector.
- Remove the support by moving aside the tabs.
- Change the bulb.

Number plate lamps

On the hinged rear doors

On the tailgate

Type A, C 5 W - 5 W

- Unclip the transparent cover using the screwdriver supplied in the tool kit (behind the driver's seat) and extract the bulb holder.
- Change the bulb by moving aside the two contacts.
- Ensure that the new bulbs are secured correctly between the two contacts.
- Replace the plastic lens and press on it.

Third brake lamp

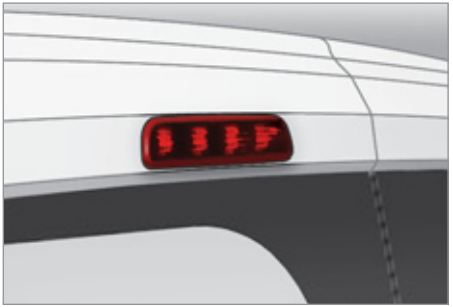

On the hinged rear doors

Type B, W 5 W - 5 W (4 bulbs)

- Unclip the transparent cover using the screwdriver located in the tool kit.
- Disconnect the electrical connector.
- Remove the bulb holder by squeezing the two tabs.
- Remove the faulty bulb.
- Change the bulb.

On the tailgate

Type B, W5W - 5W (5 bulbs)

- Open the tailgate.
- Remove the two cover retaining screws, then the cover.
- Remove the bulb holder by squeezing the two tabs.
- Remove the faulty bulb.
- Change the bulb.

If you encounter any difficulty, consult a CITROËN dealer or a qualified workshop.

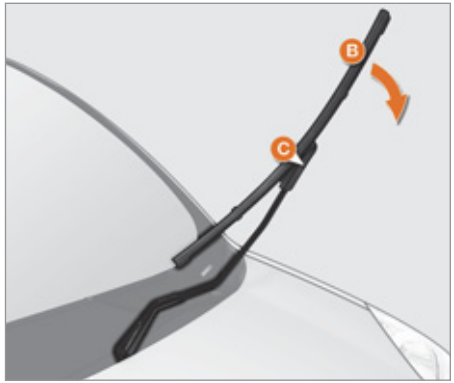

CHANGING A WIPER BLADE

Changing a front or rear wiper blade

Instructions for removing the blade:
Lift the wiper arm **A** off the windscreen.
Turn the blade **B** 90° around the pivot **C** on the end part of the arm.
Remove the pivot from the blade **C**.

Instructions for fitting the blade:
Fit the pivot **C** in the hole in the central part of the blade **B**.
Place the arm with the blade on the windscreen.

CHANGING A FUSE

The two fuseboxes are placed on the dashboard on the driver's side and under the bonnet.

CITROËN will not accept responsibility for the cost incurred in repairing your vehicle or for rectifying the malfunctions resulting from the installation of accessories not supplied and not recommended by CITROËN dealers and not installed in accordance with its instructions, in particular when the combined consumption of all of the additional equipment connected exceeds 10 milliamperes.

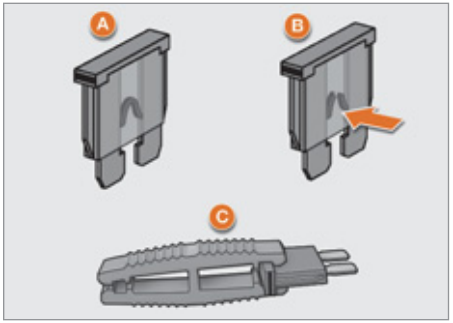

A. Good.

B. Failed.

C. Tweezer.

Removing and fitting a fuse

Before changing a fuse, the cause of the fault must be found and rectified. The fuse numbers are indicated on the fusebox. Always use the special tweezer to extract the fuse from its housing and check the condition of its filament.

Always replace a faulty fuse with a fuse of the same rating.

If a fuse fails again soon after replacement, have the electrical system of your vehicle checked by a CITROËN dealer or a qualified workshop.

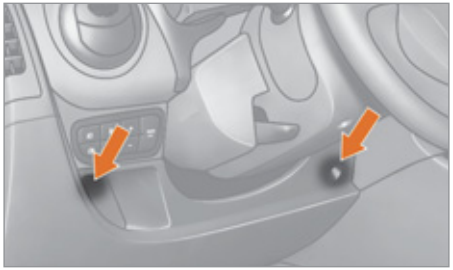

Access to fuses in the dashboard

- To gain access to the dashboard fuses, remove the 2 screws using the ignition key and tilt the housing.

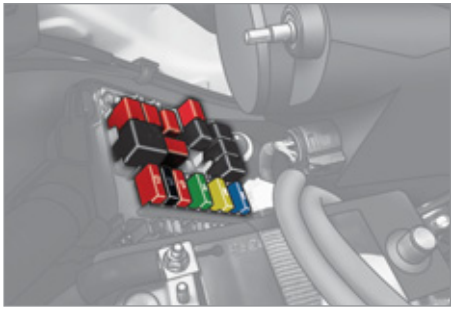

Access to fuses in the engine compartment

- For access to the fuses in the engine compartment, remove the left hand front headlamp connector, then unclip the fusebox cover.

Table of dashboard fuses, driver's side

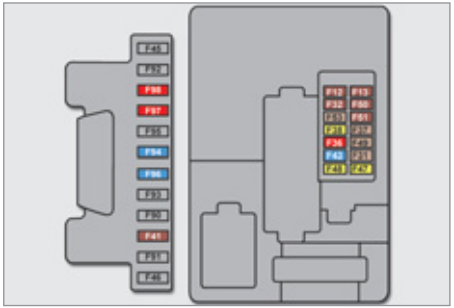

Marking	Rating	Functions
F12	7.5 A	Right-hand dipped beam headlamp supply
F13	7.5 A	Left-hand dipped beam headlamp supply - headlamp height adjuster
F31	5 A	Engine control unit supply switch
F32	7.5 A	Front lamp - front courtesy lamp - rear courtesy light lamp
F36	10 A	Audio system - mobile telephone pre-equipment - air conditioning control panel - EODB diagnostic socket
F37	5 A	Brake lamp - instrument panel
F38	20 A	Door locking
F43	15 A	Screenwash pump
F47	20 A	Driver's electric window motor supply
F48	20 A	Passenger's electric window motor supply
F49	5 A	Parking sensors control unit - rear lighting switch - electric door mirrors - volumetric alarm control unit
F50	7.5 A	Airbags control unit
F51	7.5 A	Switch on brake pedal - switch on clutch pedal - door mirror controls - central Bluetooth system
F53	5 A	Instrument panel - rear foglamps

Marking	Rating	Functions
F41	7.5 A	Door mirror demisting.
F94	15 A	Cigar lighter.
F96	15 A	12 V accessory socket.
F97	10 A	Heated seat, driver's side.
F98	10 A	heated seat, passenger's side.

Table of fuses in the engine compartment

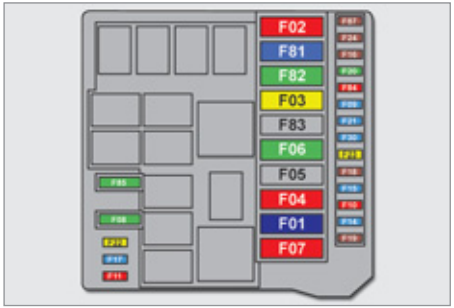

Marking	Rating	Functions
F01	60 A	Control unit
F02	40 A	Passenger compartment fan.
F03	20 A	Starter motor supply
F04	40 A	ABS hydraulic block pump supply
F06	30 A	Single speed cooling fan control
F07	40 A	High speed cooling fan control
F08	30 A	Air conditioning compressor
F09	15 A	Towbar harness.
F10	10 A	Horn
F11	10 A	Engine management secondary load supply
F14	15 A	Main beam headlamps
F15	15 A	12 V accessory socket.

Marking	Rating	Functions
F16	7.5 A	Engine management control unit - electronic gearbox control unit and gear lever - T20 relay coil
F17	15 A	Supply for ignition coil - injectors - engine management control unit (1.3 HDi)
F18	7.5 A	Engine management control unit (1.3 HDi) - T09 relay coil
F19	7.5 A	Air conditioning compressor
F20	30 A	Supply for heated rear screen, electric door mirrors heater elements
F21	15 A	Fuel pump (1.4 petrol and 1.3 HDi)
F22	20 A	Engine management control unit (1.3 HDi)
F23	20 A	ABS hydraulic block electrovalves supply
F24	7.5 A	ABS
F30	15 A	Foglamps
F81	60 A	Pre-heat unit (1.3 HDi)
F82	30 A	Electronic gearbox pump - electronic gearbox supply
F84	10 A	Electronic gearbox control unit and electrovalves
F85	30 A	Cigar lighter - 12 V accessory socket
F87	7.5 A	Reversing lamps - water in Diesel sensor - airflow sensor - T02, T05, T14, T17 and T19 relay coils (except 1.3 HDi)
	5 A	Reversing lamps - water in Diesel sensor - airflow sensor - T02, To5, T14, T17 and T19 relay coils - battery state of charge sensor (except 1.3 HDi)

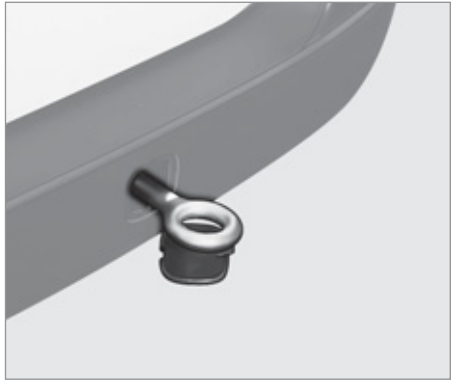

BEING TOWED

The removable towing eye is located in the tool kit behind the driver's seat (Light van) or behind the rear bench seat (Combi).

From the front

In the front bumper, unclip the cover on the right using a flat tool.
Screw the removable towing eye in fully.
Then hook the towbar on the towing eye.
Unlock the steering by turning the the ignition key one notch and release the parking brake.
Switch on the hazard warning lamps on both vehicles.
Move off gently and drive slowly, towing for a short distance only.

On the towed vehicle, the gear lever must be put in neutral; failure to observe this special condition may result in damage to certain braking components (brakes, transmission...) and the absence of braking assistance when the engine is started.

From the rear

In the rear bumper, unclip the cover at the bottom using a flat tool.
Screw the removable towing eye in fully.
Then hook the towbar on the towing eye.
Switch on the hazard warning lamps on both vehicles.
Move off gently and drive slowly, towing for a short distance only.

General recommendations

Observe the legislation in force in your country.

Ensure that the weight of the towing vehicle is higher than that of the towed vehicle.
The driver must stay at the wheel of the towed vehicle.
Driving on motorways and fast roads is prohibited when towing.
When towing a vehicle with all four wheels on the ground, always use an approved towing bar; rope and straps are prohibited.
When towing a vehicle with the engine off, there is no longer any power assistance for braking or steering.
In the following cases, you must always call on a professional recovery service:

- vehicle broken down on a motorway or fast road,
- when it is not possible to put the gearbox into neutral, unlock the steering, or release the parking brake,
- towing with only two wheels on the ground,
- where there is no approved towing bar available...

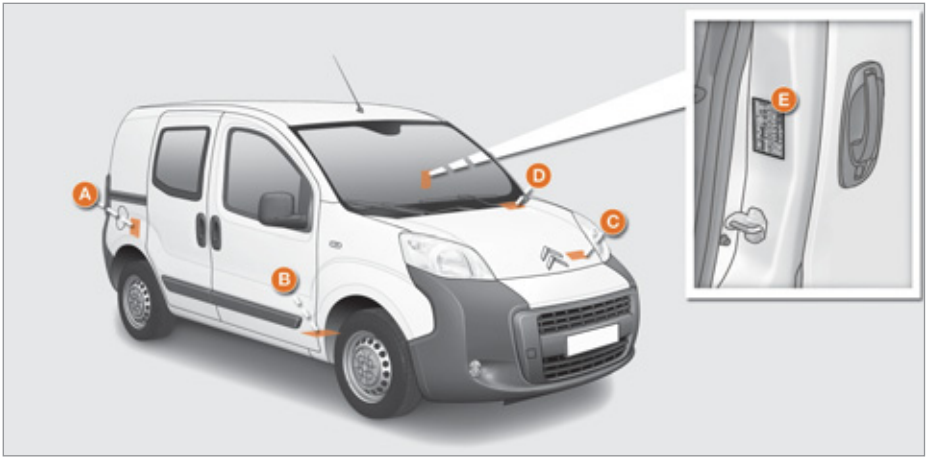

IDENTIFICATION FEATURES

A. Manufacturer's plate

1. VF Type serial number.
2. Gross vehicle weight (GVW).
3. Gross train weight (GTW).
4. Maximum weight on front axle.
5. Maximum weight on rear axle.

B. Serial number on the body
C. Paint reference
D. Serial number on the fascia
E. Tyre pressures

FILLING WITH FUEL

Capacity of the fuel tank: approximately **45 litres**.

Low fuel level

When the minimum fuel tank level is reached, this warning lamp comes on. When it first comes on, you have approximately **6 litres** of fuel remaining. Refuel without delay to avoid running out of fuel.

With Stop & Start, never refuel with the system in STOP mode; you must switch off the ignition with the key.

Refuelling must be done **with the engine off.**

- Open the fuel filler flap.
- Hold the filler cap with one hand.
- With the other hand, insert the key, then turn it a third of a turn.
- Remove the filler cap and hang it on the hook, located on the inside of the filler flap.

When the fuel filler flap is open, a safety system prevents sliding of the side door (Combi).

A label affixed to the inside of the flap reminds you of the type of fuel to be used.
Opening the filler cap may cause a noise resulting from the inrush of air. This vacuum is quite normal and results from the sealing of the fuel system.
When filling the fuel tank, do not continue after the 3rd cut-off of the nozzle; this could cause malfunctions.
After filling the fuel tank, lock the filler cap and close the flap.

FUEL CIRCUIT DEACTIVATED

In the event of a serious collision, a device automatically cuts off the fuel supply to the engine and the vehicle's electrical supply.
It also triggers the automatic unlocking of the doors and switching on of the courtesy lights. A message appears on the instrument panel display according to version.
Turn the key to the **STOP** position to prevent discharging of the battery.
Check that there is no smell or leak of fuel outside the vehicle.

Re-activation

To set off again, restore the fuel supply and the electrical supply manually:

- with the key in the **STOP** position, turn the key to the **RUNNING** position,
- push the direction indicators control up fully,
- place it in the "Off" position,
- press the direction indicators control down fully,
- return it to the "Off" position,
- push it up fully again,
- return it to the "Off" position,
- press it down fully again,
- return it to the "Off" position,
- turn the key to the **STOP** position.

Quality of the fuel used for petrol engines

The petrol engines are perfectly compatible with E10 type petrol biofuels (containing 10 % ethanol), conforming to European standards EN 228 and EN 15376.
E85 type fuels (containing up to 85 % ethanol) are reserved exclusively for vehicles marketed for the use of this type of fuel (BioFlex vehicles). The quality of the ethanol must comply with European standard EN 15293.
For Brazil only, special vehicles are marketed to run on fuels containing up to 100 % ethanol (E100 type).

Quality of the fuel used for Diesel engines

The Diesel engines are perfectly compatible with biofuels which conform to current and future European standards (Diesel fuel which complies with standard EN 590 mixed with a biofuel which complies with standard EN 14214) available at the pumps (containing up to 7 % Fatty Acid Methyl Ester).
The B30 biofuel can be used in certain Diesel engines; however, this use is subject to strict application of the special servicing conditions. Contact a CITROËN dealer or a qualified workshop.
The use of any other type of (bio)fuel (vegetable or animal oils, pure or diluted, domestic fuel...) is strictly prohibited (risk of damage to the engine and fuel system).

40 YEARS OF PASSION

The strength of the partnership between TOTAL and CITROËN is demonstrated in particular through motor sport: from the 1969 Morocco Rally to the superb double victory for TEAM CITROËN TOTAL and Sébastien LOEB and Daniel ELENA in the 2009 World Rally Championship. The impressive list of awards for the two marques has been built up through epic battles, fought in extreme conditions. These trials permit arduous testing of the TOTAL lubricants, assuring the performance of CITROËN vehicles.

CITROËN

TOTAL

CITROËN préfère TOTAL

CITROËN préfère TOTAL 40 ANS

Partenaires depuis 1968

OPENING THE BONNET

On the inside

Pull the lever under the fascia panel towards you.

Before doing anything under the bonnet, switch off the ignition with the key to avoid any risk of injury resulting from an automatic change to START mode.

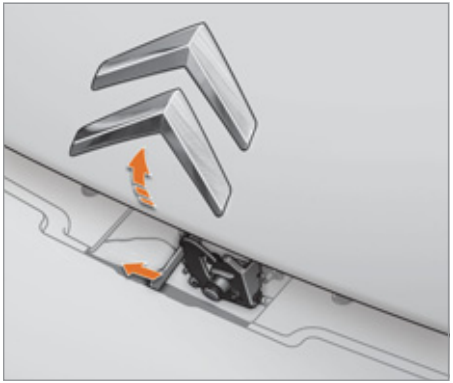

On the outside

Raise the bonnet slightly, placing your hand flat under the bonnet to make the operation easier.
Push the lever to the left, then open the bonnet fully.
While holding the bonnet open, check that the locking control **A** is engaged by pressing it.

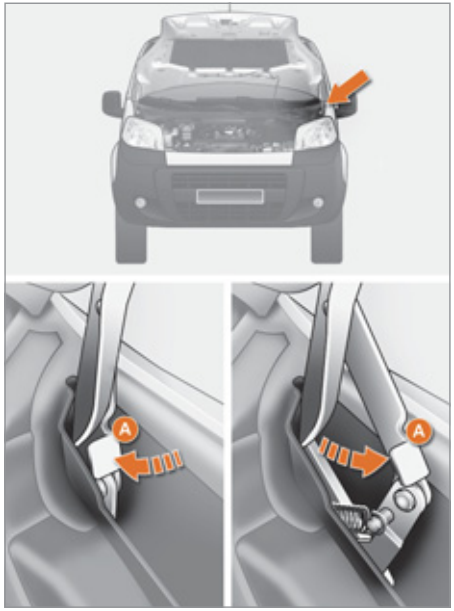

To close

Lift the bonnet slightly and pull the release control **A** to release it.
Lower the bonnet and release it at the end of its travel. Check that the bonnet is locked.
Avoid manoeuvring the bonnet in strong winds.

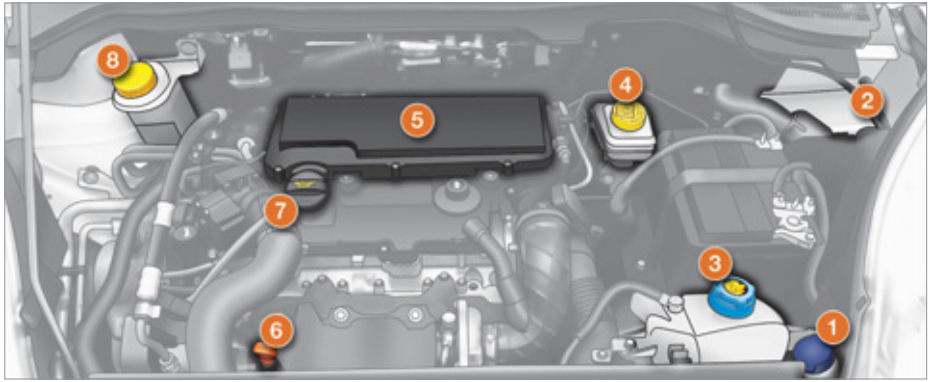

Diesel engine

UNDER THE BONNET

1. Windscreen wash reservoir.
2. Fuse box.
3. Engine coolant reservoir.
4. Brake and clutch fluid reservoir.
5. Air filter.
6. Dipstick.
7. Engine oil filler cap.
8. Power steering fluid reservoir.

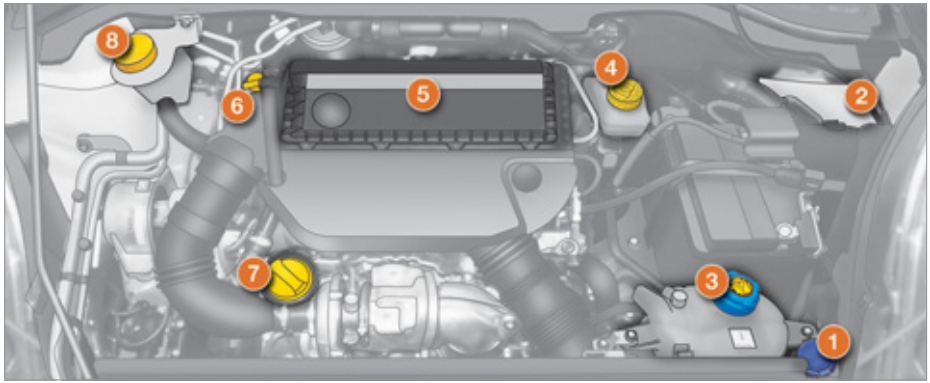

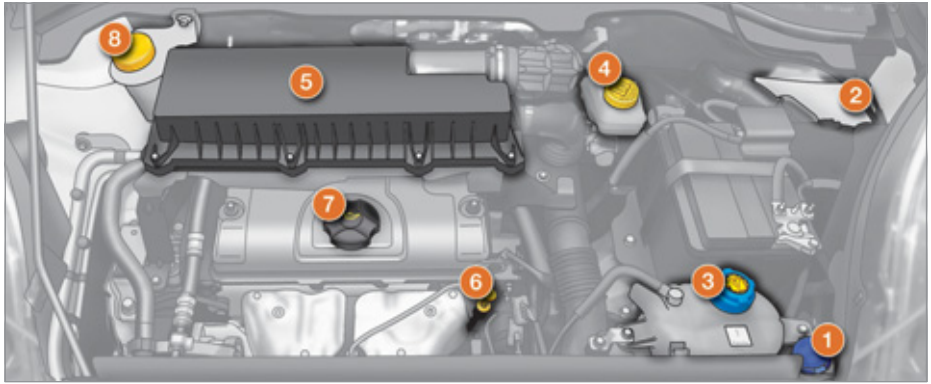

Petrol engine

UNDER THE BONNET

1. Windscreen wash reservoir.
2. Fuse box.
3. Engine coolant reservoir.
4. Brake and clutch fluid reservoir.
5. Air filter.
6. Dipstick.
7. Engine oil filler cap.
8. Power steering fluid reservoir.

LEVELS

These regular maintenance operations will keep your vehicle in good working order. Ask for advice from a CITROËN dealer or a qualified workshop or refer to the servicing booklet provided in the handbook pack.

Oil level

Check the level regularly and top up between changes. The maximum oil consumption is 0.5 litre per 600 miles (1 000 km). Check the level with the vehicle level, engine cold, using the dipstick.

Dipstick

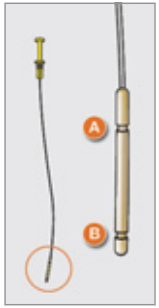

There are two marks on the dipstick:

A = maximum
If you fill past this mark, contact a CITROËN dealer or a qualified workshop.

B = minimum
Never allow the level to fall below this mark.

To preserve the reliability of engines and emission control systems, the use of additives in engine oil is prohibited.

Oil change

This must be carried out at the specified interval and the viscosity grade of the oil selected must fulfil the requirements of the manufacturer's servicing schedule. Ask for advice from a CITROËN dealer or a qualified workshop.
Remove the dipstick before filling.
Check the level after filling (never exceed the maximum mark).
Refit the filler cap before closing the bonnet.

Brake fluid level

The brake fluid must be changed at the specified interval, as given in the manufacturer's servicing schedule.
Use fluids recommended by the manufacturer, which meets the DOT4 standard.
The level must be between the **MIN** and **MAX** marks on the reservoir.
If fluid has to be added frequently, this indicates a fault which must be checked by a CITROËN dealer or a qualified workshop as soon as possible.

Warning lamps

Checking by means of the warning lamps in the instrument panel is described in chapter 1, refer to the "Instruments and controls" section.

Engine coolant level

Only use the fluid recommended by the manufacturer. Otherwise, you risk seriously damaging your engine. When the engine is warm, the temperature of the coolant is controlled by the engine cooling fan.
As this fan can operate with the ignition key removed and because the cooling system is pressurised, wait for at least one hour after the engine has stopped before carrying out any work.

Slacken the cap by two turns to release the pressure to prevent any risk of scalding. When the pressure has dropped, remove the cap and top up the level with coolant.
If fluid has to be added frequently, this indicates a fault which must be checked by a CITROËN dealer or a qualified workshop as soon as possible.

Topping up

The level must be between the **MIN** and **MAX** marks on the header tank. If more than 1 litre of fluid is required to top up the level, have the system checked by a CITROËN dealer or a qualified workshop.

Power steering fluid level

The vehicle must be parked on level ground with the engine cold. Unscrew the cap with integral gauge and check the level which must be between the **MIN** and **MAX** marks.

Screenwash fluid level

For optimum cleaning and to avoid freezing, topping up or replacement of this fluid should never be with plain water; we recommend the use of products available from CITROËN dealers.
Capacity of the reservoir: approximately 5.5 litres.

Used products

Avoid prolonged contact of used oil with the skin.
Brake fluid is harmful to health and very corrosive.
Do not dispose of used oil, brake fluid or coolant into drains or into the ground, but into the containers provided for this purpose at CITROËN dealers (France) or at an authorised waste disposal site.

CHECKS

Bleeding water from the Diesel filter

If this warning lamp comes on, you must bleed the filter; otherwise bleed the filter regularly, every time the engine is changed.

To remove the water, unscrew the bleed screw or the water in Diesel sensor, located at the base of the filter. Operate until all of the water has flowed out. Then tighten the bleed screw or the water sensor.

HDi engines use advanced technology. All work requires specialist knowledge, which all CITROËN dealers have.

Battery

At the start of winter, have your battery checked by a CITROËN dealer or a qualified workshop.

The presence of this label, in particular with the Stop & Start system, indicates the use of a specific 12 V lead-acid battery with special technology and specification, for which the involvement of a CITROËN dealer or a qualified workshop is required when replacing or disconnecting the battery. Failure to observe this recommendation may shorten the life of the battery.

Air filter and passenger compartment filter

A blocked passenger compartment filter may reduce the performance of the air conditioning system and generate undesirable odours. The replacement intervals for these components are indicated in the servicing booklet.

Depending on the environment (dusty atmosphere...) and the use of the vehicle (urban driving...), change them twice as often if necessary, refer to the "Under the bonnet" section of chapter 7.

Brake pads

Brake pad wear depends on the style of driving, in particular for vehicles which are used in town, over short distances. It may be necessary to check the brake pad wear, even between services.

Unless there is a leak on the system, a drop in the brake fluid level indicates that the brake pads are worn.

Brake disc/drum wear

For all information on checking the brake disc/drum wear, contact a CITROËN dealer or a qualified workshop.

Parking brake

Where the parking brake travel is too great or there is a reduction in the performance of the system, the parking brake should be adjusted, even between services.

Have the system checked by a CITROËN dealer or a qualified workshop.

Oil filter

Change the filter regularly, in accordance with the servicing schedule.

Manual gearbox

The gearbox does not require any maintenance (no oil change).
Refer to the Warranty and Maintenance Record for the details of the level checking interval for this component.

Electronic gearbox

The gearbox does not require any maintenance (no oil change).
Refer to the servicing booklet for details of the checking interval for this component.

To check the main levels and certain components, in accordance with the manufacturer's servicing schedule, refer to the pages of the servicing booklet which correspond to your vehicle's engine.
Only use products recommended by CITROËN or products of equivalent quality and specification.
In order to optimise the operation of units as important as the braking system, CITROËN selects and offers specific products.
In order to avoid damaging the electrical units, high pressure washing to clean the engine compartment is strictly prohibited.

Particle filter system (1.3 HDi 75)

An addition to the catalytic converter, this filter makes an active contribution to the preservation of air quality by the retaining of the unburnt pollutant particles. Black exhaust fumes are thus no longer emitted.
This filter, fitted to the exhaust system, accumulates particles of soot. The engine control unit manages the automatic periodic elimination of the soot particles (regeneration).
the regeneration procedure is invoked according to the quantity of particles accumulated and the driving conditions of the vehicle. During this phase, you may notice some unusual phenomena - increased idling speed, cooling fan running, increase in smoke and higher exhaust gas temperature - which does not affect the operation of the vehicle or the environment.
After prolonged idling or driving at very low speeds, you may occasionally notice water vapour being emitted from the exhaust when accelerating. This is of no consequence to the running of the vehicle or to the environment.

Because of the higher exhaust gas temperature resulting from the normal operation of the particle filter, it is recommended that you do not park the vehicle over inflammable materials (grass, dry leaves, pine needles,...) so as to avoid any risk of fire.

Saturation/Regeneration

If there is risk of blockage of the filter, this warning lamp comes on in the instrument panel.
This alert tells you that the particle filter is starting to fill up (in conditions of urban driving of exceptionally long duration: low speeds, traffic jams etc.)
To regenerate the filter, it is advised to drive as soon as possible, when traffic conditions and the law permit, at a speed of at least 40 mph (around 60 km/h), with an engine speed above 2 000 rpm for about fifteen minutes (until the warning lamp and/or the message disappears).
if possible, avoid switching off the engine before the end of regeneration of the filter; repeated interruptions could cause premature deterioration of the engine oil.
It is not recommended to end regeneration of the filter with the vehicle stationary.

Operating fault

If this alert persists, do not ignore the warning; it indicates that a fault has occurred in the exhaust/particle filter system.
Have it checked by a CITROËN dealer or a qualified workshop.

EXTERIOR (LIGHT VAN)

Accessories 133-134
Roof rack 133

Dimensions.....58-59

Key, remote control, battery.....31-33
Central locking.....31, 37, 39
Opening/Closing front windows.....32
Confidential card.....34
Alarm 35

Wiper blades.....148
Door mirrors.....46
Side repeater.....145

Front lamps, foglamps, direction indicators 41-42,143-145
Headlamp beam height adjustment.....42
Changing bulbs.....143-147

Opening/ Closing doors.....31, 33, 36-40
Opening the bonnet.....159
Menu - autoclose.....37, 39, 70

Brakes, pads.....162, 164
Hill start assist 54
Braking assistance 114-115
Trajectory control..... 115-117
Tyres, pressures.....155

Right-hand side:
fuel filler cap, fuel tank.....156
fuel cut-off.....156-157

Load space.....108-109
Rear doors.....31, 33, 36-40
Opening/Closing to 180° 37, 39

Rear lamp, direction indicators, 3rd brake lamp..... 41-42, 146-147

Number plate lamps 146

Rear parking sensors 72

Spare wheel, changing a wheel, tools.....138-140

Towing, lifting.....154
Towbar.....131-132

EXTERIOR (COMBI)

Accessories 133-134
Roof bars 133

Key, remote control, battery.....31-33
Central locking.....31, 37, 39
Opening/Closing front windows.....32
Confidential card.....34
Alarm 35

Wiper blades.....148
Door mirrors.....46
Side repeater 145

Front lamps, foglamps,
direction indicators 41-42, 143-145
Headlamp beam height adjustment 42
Changing bulbs.....143-147

Opening/
Closing doors 31, 33, 36-40
Child lock 40
Rear windows 47
Opening the bonnet 159
Menu - autoclose 37, 39, 70

Dimensions.....60-63

Brakes, pads.....162, 164
Hill start assist 54
Braking assistance 114-115
Trajectory control 115-117
Tyres, pressures 142, 155

Right-hand side:
fuel filler cap, fuel tank.....156
fuel cut-off.....156-157

Rear fittings 110-111
Rear doors.....31, 33, 36-40
Opening/Closing to 180° 37, 39

Rear lamps, direction indicators,
3rd brake lamp..... 41-42, 146-147

Number plate lamps 146

Rear parking sensors 72

Spare wheel,
changing a wheel,
tools, temporary puncture
repair kit..... 138-140, 141-142

Towing, lifting 154
Towbar 131-132

INTERIOR (LIGHT VAN)

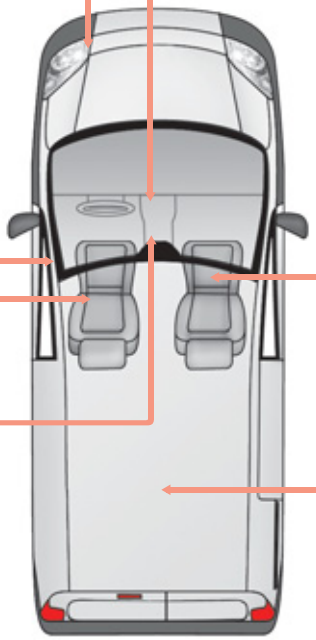

Battery (+), charging, starting 135-137

Seat belts 118-119
Airbags 120-123
Deactivating the passenger's airbag 122

Seats, adjustments 95-96
Tools, jack 138

12 V socket 106
Parking brake 113

Rear view mirror 46
Front courtesy lamp 112
Changing a courtesy lamp bulb 145

Folding seat 97
Child seats 124-126, 128

Load space 108-109
- stowing rings,
- storage tray,
- torch,
- vertical partition.

Rear courtesy lamp 112
Accessories 133-134

INTERIOR (COMBI)

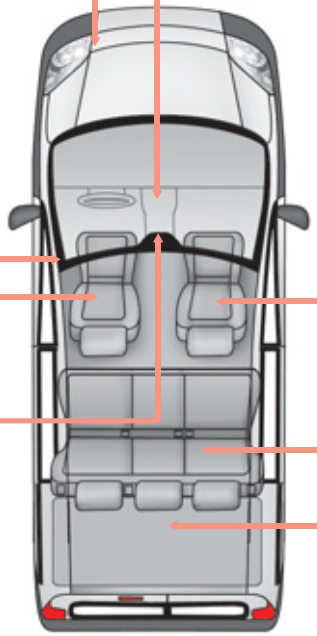

Battery (+), charging, starting 135-137

Front seat belts 118-119
Airbags 120-123
Deactivating the passenger's airbag 122

Front seats, adjustments 95-96

12 V socket 106
Parking brake 113

Rear view mirror 46
Front courtesy lamp 112
Changing a courtesy lamp bulb 145

Folding seat 97
Bench rear seat 98-99
Rear seat belts 118-119
Child seats 124-125, 127-128
ISOFIX mountings 129-130

Rear fittings 110
- stowing rings,
- luggage retaining net,
- rear parcel shelf.

Rear courtesy lamp 112
Tools, jack, temporary puncture repair kit 138, 141-142
Accessories 133-134

INTERIOR (COMBI)

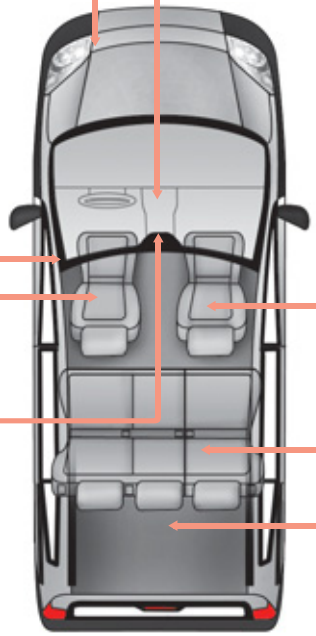

Battery (+), charging, starting 135-137

Front seat belts 118-119
Airbags 120-123
Deactivating the passenger's airbag 122

Front seats, adjustments 95-96

12 V socket 106
Parking brake 113

Rear view mirror 46
Front courtesy lamp 112
Changing a courtesy lamp bulb 145

Folding seat 97
Rear bench seat 100-101
Rear seat belts 118-119
Child seats 124-125, 127-128
ISOFIX mountings 129-130

Rear fittings 110-111
- stowing rings,
- luggage retaining net,
- rear parcel shelf,
- retaining straps,
- torch.

Rear courtesy lamp 112
Boot lamp 112
Tools, jack, temporary puncture repair kit 138, 141-142
Accessories 133-134

INSTRUMENTS AND CONTROLS

Instrument panels, screens, dials....21
Warning lamps, indicator lamps....22-28
Indicators, gauge....29-30

Steering wheel, adjustments....48
Horn....114
Instruments and controls....7

Lighting controls....41-43
Guide-me-home lighting....42
Parking lamps....41

Cruise control....44-45

Configuration - vehicle personalisation....68-71
Setting the time....70
Headlamp beam height adjustment....42
Front/rear foglamps....42
Lighting dimmer....30

Fuses....149-151

Opening the bonnet....159

Front/rear wipers....43
Screenwash....43
Trip computer....68

Starting, ignition switch....18, 34

Electric windows....47
Door mirrors....46

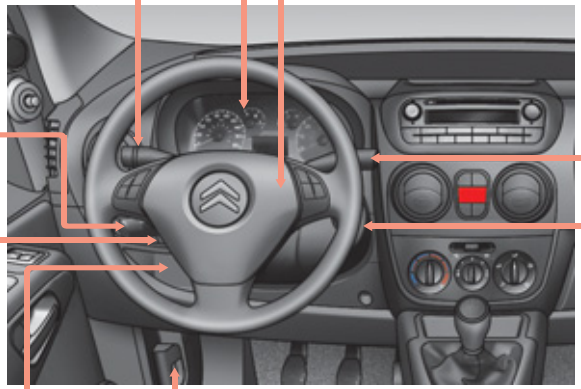

Audio system, CD/MP3 73-76
Radio steering mounted controls/
Hands-free kit 74, 77-94

Anti-slip regulation/Intelligent
traction control 115-117
Stop & Start 55-57
Hazard warning lamps..... 113

Gear shift
indicator 49

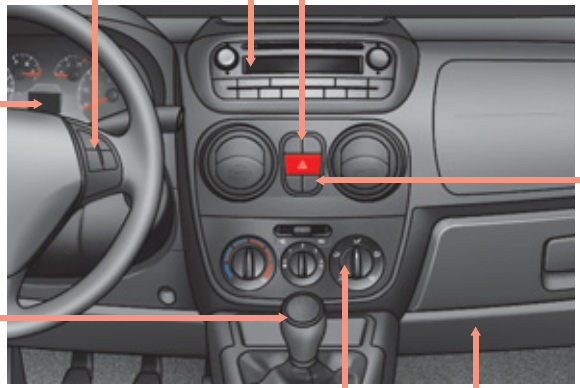

Demisting/defrosting.....102
Locking the load
space 38-39

Gearboxes..... 48-49, 50-52
Rear parking sensors 72

Front fittings.....106-107
- glove box,
- smoker's kit,
- 12 V socket,
- writing table,
- spectacles storage,
- sun visor.

Heating, ventilation,
air conditioning 103, 104-105

TECHNICAL DATA - MAINTENANCE

Changing a wiper blade.....148

Levels 162-163
- dipstick,
- power steering fluid,
- brake fluid,
- coolant,
- screenwash.

Engine fuses.....149, 152-153

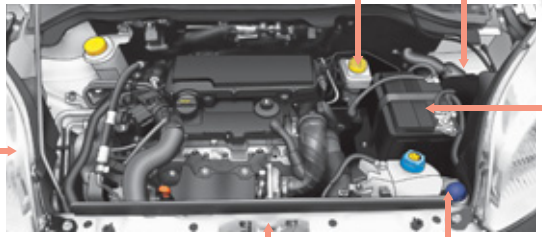

Bulbs, lighting,
changing bulbs 143-147

Checks.....164-165
- battery,
- air/passenger compartment filter,
- oil filter,
- particle emissions filter (1.3 HDi 75),
- parking brake,
- brake pads.

Emission control 29, 165

Opening the bonnet.....159
Under the bonnet.....160-161

Screenwash.....163

Identification markings,
serial number,
paint, tyres 155

Engine technical data 64-65
Dimensions..... 58-59, 60-61, 62-63
Weights.....66

This handbook describes all of the equipment available in the whole range.

Your vehicle will be fitted with some of this equipment described in this document, depending on its trim level, version and the specification for the country in which it is sold.

The descriptions and illustrations are given without any obligation. Automobiles CITROËN reserves the right to modify the technical specifications, equipment and accessories without having to update this edition of the handbook.

This document is an integral part of your vehicle. It should be passed on to the new user in the event of sale or transfer.

For any work on your vehicle, use a qualified workshop that has the technical information, competence and equipment required, which a CITROËN dealer is able to provide.

Automobiles CITROËN declares, by application of the provisions of the European regulation (Directive 2000/53) relating to End of Life Vehicles, that it achieves the objectives set by this regulation and that recycled materials are used in the manufacture of the products that it sells.

Reproduction or translation of all or part of this handbook is prohibited without written authorisation from Automobiles CITROËN.

Printed in the EU

Anglais

01-11

Automobiles CITROËN
Siège social : 6 rue Fructidor - 75835 Paris Cedex 17 - France
TÉL. : +33 (0) 1 58 79 79 79 - www.citroën.fr
S.A. au capital de 16 000 000 € - R.C.S. Paris 642 050 199 - Siret 642 050 199 00990 - APE 741 J

11NMO.0040
Anglais

2011 – DOCUMENTATION DE BORD

4Dconcept
Diadeis
Seenk
Edipro

CRÉATIVE TECHNOLOGIE

CITROËN