HYUNDAI

Coupe Tiburon

OWNER'S MANUAL

A030A01A-GAT

Operation
Maintenance
Specifications

All information in the Owner's Manual is current at the time of publication. Hyundai reserves the right to make changes at any time as part of our policy of continual product improvement may be carried out.

This manual applies to current Hyundai models and explanations of optional as well as standard equipment are included. As a result, you may find material in this manual that does not apply to your specific vehicle.

Please note that some models are equipped with Right-Hand Drive (RHD). The explanations and illustrations for some operations in RHD models are opposite of those written in this manual.

A020A01A-AAT

RESPONSIBILITY FOR MAINTENANCE

The maintenance requirements for your new Hyundai are found in Section 5. As the owner, it is your responsibility to see that all maintenance operations specified by the manufacturer are carried out at the appropriate intervals. When the vehicle is used in severe driving conditions, more frequent maintenance is required for some operations. Maintenance requirements for severe operating conditions are also included in Section 5.

A040A01A-AAT

FOREWORD

Thank you for choosing Hyundai. We are pleased to welcome you to the growing number of discriminating people who drive Hyundais. The advanced engineering and high-quality construction of each Hyundai we build is something of which we're very proud.

Your Owner's Manual will introduce you to the features and operation of your new Hyundai. It is suggested that you read it carefully because the information it contains can contribute greatly to the satisfaction you receive from your new car.

The manufacturer also recommends that all service and maintenance on your car be performed by an authorized Hyundai dealer. Hyundai dealers are prepared to provide high-quality service, maintenance and any other assistance that may be required.

A050A06A-AAT

HYUNDAI MOTOR COMPANY

Note: Because future owners will also need the information included in this manual, if you sell this Hyundai, please leave the manual in the vehicle for their use. Thank you.

CAUTION:
Severe engine and transaxle damage may result from the use of poor quality fuels and lubricants that do not meet Hyundai specifications. You must always use high quality fuels and lubricants that meet the specifications listed on Page 9-4 in the Vehicle Specifications section of the Owner's Manual.

Copyright 2007 Hyundai Motor Company. All rights reserved. No part of this publication may be reproduced, stored in any retrieval system or transmitted in any form or by any means without the prior written permission of Hyundai Motor Company.

A070A01A-GAT

CAUTION: MODIFICATIONS TO YOUR HYUNDAI

Modification of components may void the manufacturer's warranty
Your Hyundai should not be modified in any way. Modifications may adversely affect the safety, durability and performance of your Hyundai. Components which are subjected to modification or are added to the vehicle resulting in consequential damage are not covered by the vehicle manufacturer's warranty.

A080A01S-AAT

TWO-WAY RADIO OR CELLULAR TELEPHONE INSTALLATION

Your vehicle is equipped with electronic fuel injection and other electronic components. It is possible for an improperly installed/adjusted two-way radio or cellular telephone to adversely affect electronic systems. For this reason, we recommend that you carefully follow the radio manufacturer's instructions or consult your Hyundai dealer for precautionary measures or special instructions if you choose to install one of these devices.

A090A01A-AAT

SAFETY AND VEHICLE DAMAGE WARNING

This manual includes information titled as WARNING, CAUTION and NOTE. These titles indicate the following:

WARNING:
This indicates that a condition may result in harm, serious injury or death to you or other persons if the warning is not heeded. Follow the advice provided with the warning.

CAUTION:
This indicates that a condition may result in damage to your vehicle or its equipment if the caution is not heeded. Follow the advice provided with the caution.

NOTE:
This indicates that interesting or helpful information is being provided.

A100A01L-GAT

GUIDE TO HYUNDAI GENUINE PARTS

1. What are Hyundai Genuine Parts?

Hyundai Genuine Parts are the same parts used by Hyundai Motor Company to manufacture vehicles. They are designed and tested for the optimum safety, performance, and reliability to our customers.

2. Why should you use genuine parts?

Hyundai Genuine Parts are engineered and built to meet rigid manufacturing requirements. Using imitation, counterfeit or used salvage parts are not covered under the Hyundai New Vehicle Limited Warranty or any other Hyundai warranty. In addition, any damage to or failure of Genuine Hyundai Parts caused by the installation or failure of an imitation, counterfeit or used salvage part is not covered by Hyundai Motor Company.

3. How can you tell if you purchasing Hyundai Genuine Parts?

Look for the Hyundai Genuine Parts Logo on the package (see below).

The export specifications are written in English only.

Hyundai Genuine Parts are only sold through authorized Hyundai Dealership and Service Center.

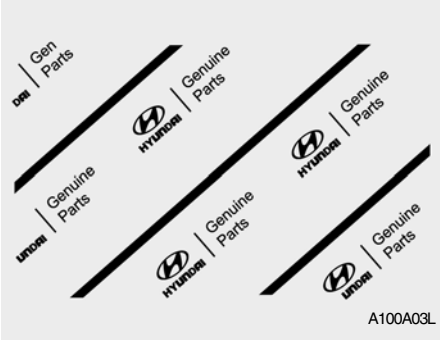

A100A03L

A100A01L

A100A02L

A100A04L

TABLE OF CONTENTS

SECTION

FEATURES OF YOUR HYUNDAI	1
DRIVING YOUR HYUNDAI	2
WHAT TO DO IN AN EMERGENCY	3
CORROSION PREVENTION & APPEARANCE CARE	4
VEHICLE MAINTENANCE REQUIREMENTS	5
DO-IT-YOURSELF MAINTENANCE	6
EMISSION CONTROL SYSTEMS	7
CONSUMER INFORMATION	8
VEHICLE SPECIFICATIONS	9
INDEX	10

INSTRUMENTS AND CONTROLS (LEFT-HAND DRIVE)

B250A01GK-GAT

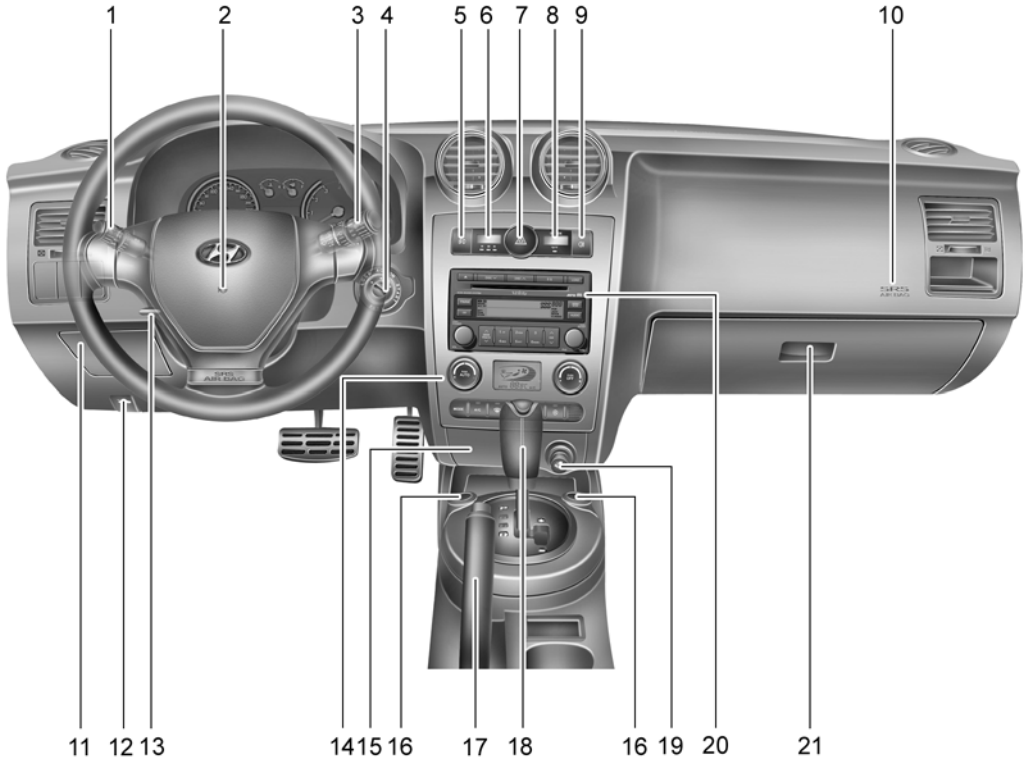

OGK026002L

1. Multi-Function Light Switch
2. Horn and Driver's Airbag
3. Windshield Wiper/Washer Switch
4. Ignition Switch
5. Front Fog Light Switch (If installed)
6. Digital Clock
7. Hazard Warning Switch
8. Outside Temperature Switch
9. Rear Fog Light Switch (If installed)
10. Passenger's Air Bag (If installed)
11. Fuse Box Relay
12. Hood Release Lever
13. Steering Wheel Tilt Lever
14. Heating and Airconditioning Control Panel
15. Ashtray
16. Front Seat Warmer (If installed)
17. Parking Brake Lever
18. Shift Lever
19. Cigarette Lighter
20. Audio System (If installed)
21. Glove Box

CAUTION:

When installing a container of liquid air freshener inside the vehicle, do not place it near the instrument cluster nor on the instrument panel surface. If there is any leakage from the air freshener onto these areas (Instrument cluster, instrument panel or air ventilator), it may damage these parts. If the liquid from the air freshener does leak onto these areas, wash them with water immediately.

INSTRUMENTS AND CONTROLS (RIGHT-HAND DRIVE)

B250B02GK-GAT

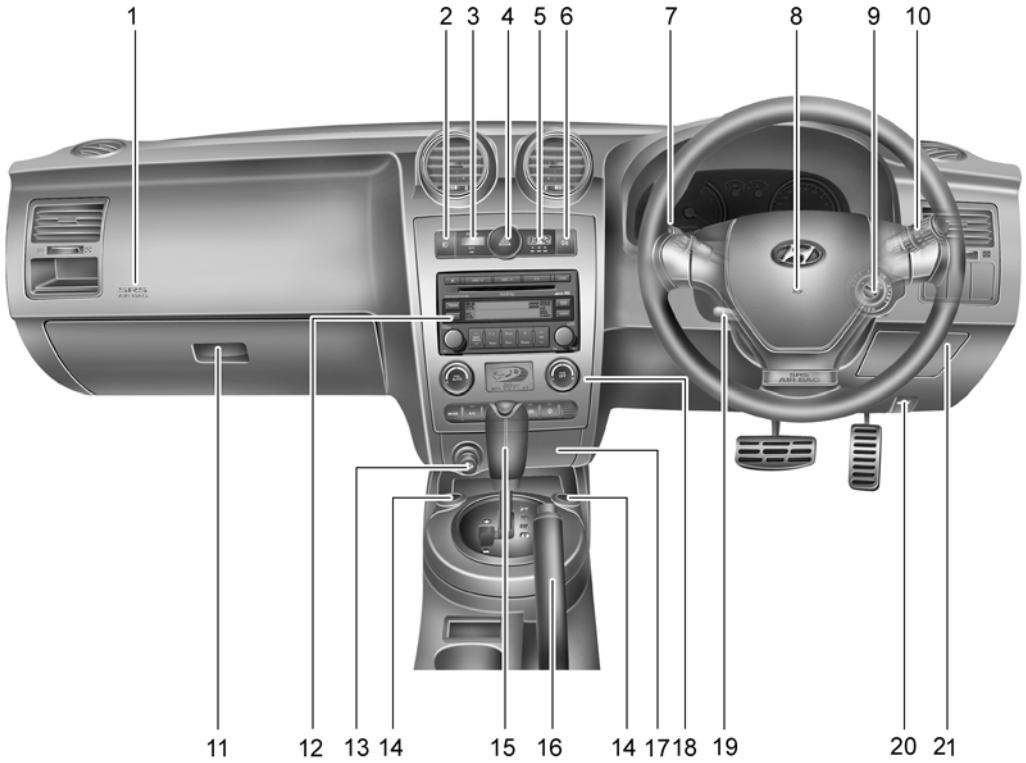

OGK026002R

1. Passenger's Air Bag (If installed)
2. Rear Fog Light Switch (If installed)
3. Outside Temperature Switch
4. Hazard Warning Switch
5. Digital Clock
6. Front Fog Light Switch (If installed)
7. Windshield Wiper/Washer Switch
8. Horn and Driver's Airbag
9. Ignition Switch
10. Multi-Function Light Switch
11. Glove Box
12. Audio System (If installed)
13. Cigarette Lighter
14. Front Seat Warmer (If installed)
15. Shift Lever
16. Parking Brake Lever
17. Ashtray
18. Heating and Airconditioning Control Panel
19. Steering Wheel Tilt Lever
20. Hood Release Lever
21. Fuse Box Relay

CAUTION:
When installing a container of liquid air freshener inside the vehicle, do not place it near the instrument cluster nor on the instrument panel surface. If there is any leakage from the air freshener onto these areas (Instrument cluster, instrument panel or air ventilator), it may damage these parts. If the liquid from the air freshener does leak onto these areas, wash them with water immediately.

B255A02GK-GAT

INDICATOR SYMBOLS ON THE INSTRUMENT PANEL

- Turn Signal Indicator Lights
- ESP / ESP OFF — Electronic Stability Program (ESP) Indicator Light (If installed)
- Immobilizer Warning Light (If installed)
- 120 km/h — Overspeed warning Light (Mideast only)
- Charging System Warning Light
- AIR BAG — SRS (Airbag) Service Reminder Indicator (SRI)(If installed)
- Seat Belt Warning Light
- High Beam Indicator Light
- Low Oil Pressure Warning Light
- CHECK — Malfunction Indicator Light (If installed)
- Low Fuel Level Warning Light
- BRAKE — Parking Brake/Brake Fluid Level Warning Light
- CRUISE — CRUISE Indicator Light (If installed)
- SET — CRUISE SET Indicator Light (If installed)
- Tail Gate Open Warning Light
- Door Ajar Warning Light (If installed)
- ABS — ABS Service Reminder Indicator (If installed)

* More detailed explanations of these items will be found beginning on page 1-44.

FEATURES OF YOUR HYUNDAI

Fuel Recommendations 1-2
Breaking In Your New Hyundai 1-3
Keys 1-4
Immobilizer System 1-4
Door Locks 1-7
Theft-Alarm System 1-9
Power Windows 1-12
Seats 1-13
Seat Belts 1-20
Child Restraint System 1-25
Supplemental Restraint (AIRBAG) System 1-34
Instrument Cluster and Indicator Lights 1-42
Warning and Indicator Lights 1-44
Trip Computer 1-53
Multi-function Light Switch 1-56
Windshield Wiper/Washer Switch 1-58
Sunroof 1-65
Mirror 1-69
Hood Release 1-73
Cruise Control 1-79
Audio Remote Control Switch 1-82
Heating and Cooling Control 1-83
Antenna 1-102
Stereo Sound System 1-103
Audio System 1-105

B010A03A-GAT

Use Unleaded Gasoline

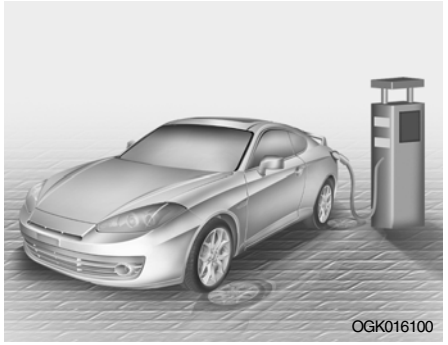

For Europe – For the optimal vehicle performance, we recommend you to use unleaded gasoline with an octane rating of RON (Research Octane Number) 95 /AKI (Anti Knock Index) 91 or higher.
You may use unleaded gasoline with an octane rating of RON 91~94/AKI 87~90 but it may result in slight performance reduction of the vehicle.

Except Europe – Unleaded gasoline with a Pump Octane Rating of 87 (Research Octane Number 91) or higher must be used in Hyundai vehicle.

If leaded gasoline is used, it will cause the catalytic converter to become ineffective and the emission control system to malfunction.
This can also result in increased maintenance expense. To avoid accidental use of leaded fuel, the large nozzle used with leaded gasoline at service stations can not be inserted into fuel tank opening of Hyundai vehicle.

NOTE:

- **For some countries, Hyundai vehicles are designed to use leaded gasoline. When you are going to use leaded gasoline, ask to Hyundai dealer whether leaded gasoline in your vehicle is available or not.**
- **Octane Rating of leaded gasoline is same with unleaded one.**

B010B01A-AAT

What About Gasohol?

Gasohol (a mixture of 90% unleaded gasoline and 10% ethanol or grain alcohol) may be used in your Hyundai. However, if your engine develops driveability problems, the use of 100% unleaded gasoline is recommended. Fuels with unspecified quantities of alcohol, or alcohols other than ethanol, should not be used.

B010D01S-AAT

Do not Use Methanol

Fuels containing methanol (wood alcohol) should not be used in your Hyundai. This type of fuel can reduce vehicle performance and damage components of the fuel system.

CAUTION:

Your Hyundai's New Vehicle Limited Warranty may not cover damage to the fuel system and performance problems that are caused by the use of methanol or fuels containing methanol.

B010E01A-AAT

Gasolines for Cleaner Air

To help contribute to cleaner air, Hyundai recommends that you use gasolines treated with detergent additives, which help prevent deposit formation in the engine. These gasolines will help the engine run cleaner and enhance performance of the Emission Control System.

B010F01A-AAT

Operation in Foreign Countries

If you are going to drive your Hyundai in another country, be sure to:

- o Observe all regulations regarding registration and insurance.
- o Determine that acceptable fuel is available.

BREAKING IN YOUR NEW HYUNDAI

B020A01S-GAT

During the First 2,000 Km (1,200 Miles)

No formal "break-in" procedure is required with your new Hyundai. However, you can contribute to the economical operation and durability of your Hyundai by observing the following recommendations during the first 2,000 km (1,200 miles).

- o Don't drive faster than 88 km/h (55 mph).
- o While driving, keep your engine speed (rpm, or revolutions per minute) between 2,000 rpm and 4,000 rpm.
- o Use moderate acceleration. Don't start, depress the accelerator pedal fully.
- o For the first 300 km (200 miles), try to avoid hard stops.
- o Don't lug the engine (in other words, don't drive so slowly. In too high a gear that the engine "bucks" shift to a lower gear).
- o Whether going fast or slow, vary your speed from time to time.
- o Don't let the engine idle longer than 3 minutes at one time.
- o Don't tow a trailer during the first 2,000 km (1,200 miles) of operation.

KEYS

B030A01A-AAT

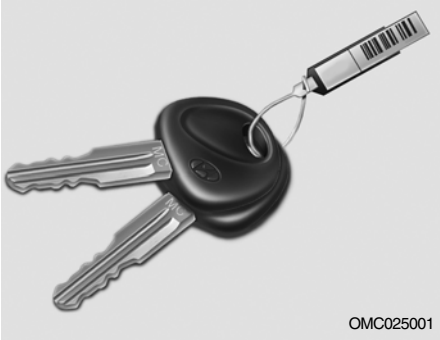

For greater convenience, the same key operates all the locks in your Hyundai. However, because the doors can be locked without a key, carrying a spare key is recommended in case you accidentally lock one key inside the car.

B030B01S-AAT

Record Your Key Number

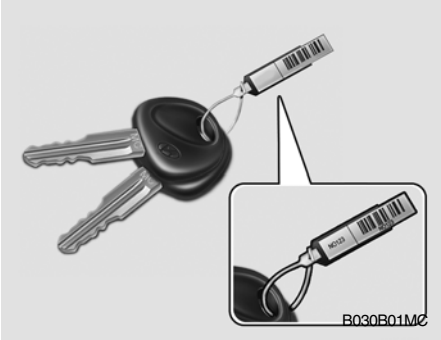

A code number is stamped on the key number plate that came with the keys to your Hyundai. This key number plate should be kept in a safe place, not in the vehicle. The key number should also be recorded in a place where it can be found in an emergency.

If you need additional keys, or if you should lose your keys, your authorized Hyundai dealer can make new keys if you can supply the key number.

IMMOBILIZER SYSTEM

B880A01A-GAT

(If Installed)

The immobilizer system is an anti-theft device, designed to deter automobile theft.

B880B04A-GAT

Keys

All of the locks fitted to the vehicle are operated by the same key. However, since it is possible to lock the doors without the use of the key, care should be exercised to ensure that the key does not become locked inside the vehicle by mistake.

NOTE:
If you make your own duplicate key, you will not be able to cancel the system or start the engine.

CAUTION:
When starting the engine, do not use the key with other immobilizer keys around. Otherwise the engine may not start or may stop soon after it starts.
Keep each key separately not to have any malfunction after you receive your new vehicle.

B880C02A-GAT

Key Numbers

The vehicle key number is recorded upon a metal tag attached to the keys when the vehicle is first delivered to you.
The key number should be recorded and kept in a safe place in case the need to order further keys arises. New keys are available from any Hyundai dealer by quoting the relevant key number.

In the interest of security, the metal tag attached to the keys which bears the key number should be removed from the key ring after you receive your new vehicle. In addition, key numbers cannot be provided by Hyundai for security reasons.
If you need additional keys or if you should lose your keys, your authorized Hyundai dealer can make new keys.

B880D02A-GAT

Limp Home Procedures

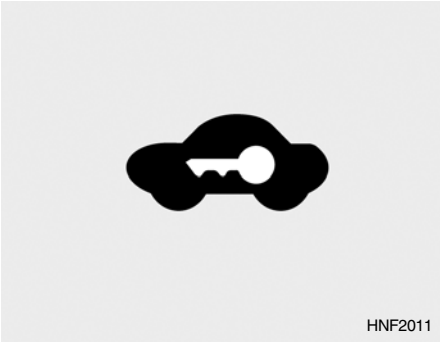

In case the immobilizer warning indicator blinks for five seconds when the ignition key is turned to "ON" position, this indicates that the immobilizer system is out of order. And you cannot start the engine without the limp home procedures with ignition key.
The following procedure is how to start the engine with the function of the limp home (0, 1, 2, 3 as a sample password).

NOTE:
You can get the limp home password when the vehicle is first delivered to you. If you do not have the password, consult your authorized Hyundai dealer.

1. To set the password you may turn the ignition key "ON" and then turn it "OFF" according to the digit numbers, then the immobilizer indicator will blink along with the operation of the ignition key. For example, turn the ignition key once for digit number "1", and twice for "2", and so on. However, for the digit number "0", you must turn the ignition key for 10 times.
2. Wait for 3~10 seconds.
3. You may set the remaining number of digits by following the same procedures 1 and 2.
4. If all of four digits have been tried successfully, turn the ignition key "ON" and check that the immobilizer indicator illuminates. From this time, you have to start your engine within 30 seconds. If you start your engine after 30 seconds, your engine will not start.

NOTE:
If the engine dies while driving after limp home procedure, you can start your engine within 8 seconds without limp home procedure again.

5. If the immobilizer indicator blinks for five seconds, you have to try the limp home procedure again from the beginning.

After doing the limp home procedure, you have to consult with your authorized Hyundai dealer as soon as possible.

CAUTION:
- **If you fail to try the limp home procedure with the sequence of three times, you have to wait for about one hour to do the limp home procedure again.**
- **If you cannot start your engine in spite of limp home procedure, have your vehicle towed by an authorized Hyundai dealer.**

B030C01Y-AAT

Illuminated Ignition Switch

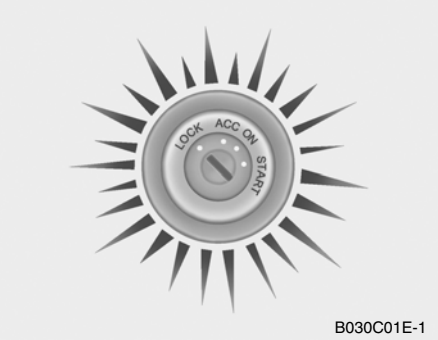

Whenever a door is opened, the ignition switch will be illuminated for your convenience, provided the ignition switch is not in the "ON" position.
The light will go off approximately 10 seconds after closing the door or when the ignition switch is turned on.

B040A01GK-GAT

WARNING:

- **Unlocked doors can be dangerous. Before you drive away (especially if there are children in the car), be sure that all the doors are securely closed and locked so that the doors cannot be inadvertently opened from the inside. This helps ensure that the doors will not be opened accidentally. Also, when combined with the proper use of seat belts, locking the doors helps keep occupants from being ejected from the car in case of an accident.**
- **Before opening the door, always look for and avoid oncoming traffic.**
- **A locked-up vehicle can become extremely hot, causing death or severe injury to unattended children, handicapped persons or animals who cannot escape the vehicle. Never leave children, handicapped persons or animals unattended in your vehicle.**
- **In case of accident, the door is unlocked automatically (If installed).**

B040B01A-AAT

Locking and Unlocking Front Doors With a Key

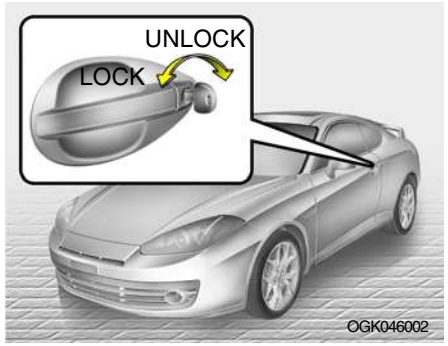

- The door can be locked or unlocked with a key.
- Lock the door by turning the key toward the front of the vehicle and unlock it by turning the key toward the rear.

B040C01O-AAT

Locking From the Outside

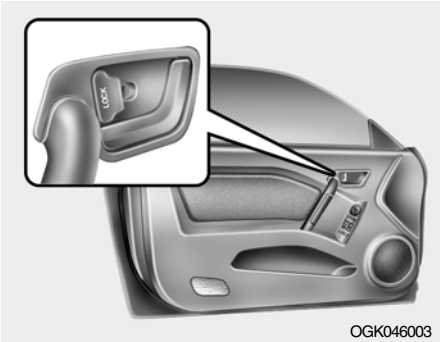

The doors can be locked without a key. To lock the doors, first push the inside lock switch to the "LOCK" position so that the red mark on the switch is not visible, then close the door.

NOTE:

- **If your vehicle is equipped with central door locking system, the door will not lock if the key is left in the ignition switch when the front doors are closed.**
- **When locking the door this way, be careful not to lock the door with the ignition key left in the vehicle.**
- **To protect against theft, always remove the ignition key, close all windows, and lock all doors when leaving your vehicle unattended.**

B040D01S-AAT

Locking From the Inside

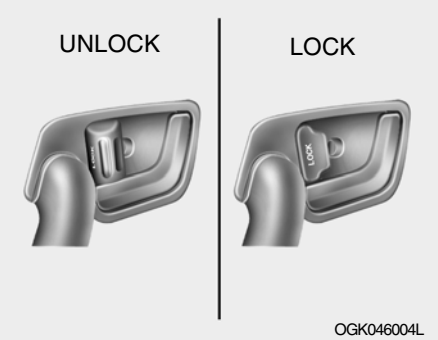

To lock the doors from the inside, simply close the door and push the lock switch to the "LOCK" position. When this is done, neither the outside nor the inside door handle can be used.

NOTE:

When the door is locked, the red mark on the switch is not visible.

B040G02GK-GAT

Central Door Lock

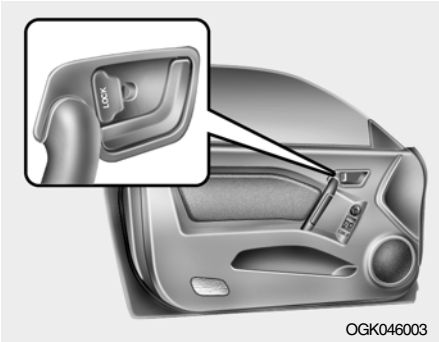

The central door locking is operated by pushing the driver's door lock switch toward the front or rear of the vehicle. If the passenger door is open when the switch is pushed, the door will remain locked when closed.

THEFT-ALARM SYSTEM

NOTE:

- **When pushing the switch toward the rear, all doors will unlock. When pushing the switch toward the front, all doors will lock.**
- **When the door is unlocked, the red mark on the switch is visible.**
- **The central door locking is operated by turning the key (driver's door only) toward the front or rear of the vehicle.**
- **If the door is locked/unlocked multiple times in rapid succession with either the vehicle key or door lock switch, the system may stop operating temporarily in order to protect the circuit and prevent damage to system components.**

B070A01A-AAT

(If Installed)

This system is designed to provide protection from unauthorized entry into the car. This system is operated in three stages: the first is the "Armed" stage, the second is the "Alarm" stage, and the third is the "Disarmed" stage. If triggered, the system provides an audible alarm with blinking of the turn signal light.

B070B02GK-AAT

Armed Stage

Park the car and stop the engine. Arm the system as described below.

1) Remove the ignition key from the ignition switch.
2) Make sure that the engine hood and tail gate are closed and latched.
3) Lock the doors using the transmitter of the keyless entry system.

After completion of the steps above, the turn signal light will blink once to indicate that the system is armed.

NOTE:

1) **If any door, tail gate or engine hood remains open, the system will not be armed.**
2) **If this happens, rearm the system as described above.**
3) **Once the system is armed, only the tail gate may be unlocked using the key without disarming the system.**

CAUTION:

Do not arm the system until all passengers have left the car. If the system is armed while a passenger(s) remains in the car, the alarm may be activated when the remaining passenger(s) leaves the car.

B070C02GK-GAT

Alarm Stage

The alarm will be activated if any of the following occur while the car is parked and the system is armed.

1) A front door is unlocked and opened without using the transmitter.
2) The tail gate is opened without using the key.
3) The engine hood is opened.

The alarming horn will sound and the turn signal lights will blink continuously for 27 seconds (E.C, Mideast only/ Except E.C : This happens 3 times). To turn off the system, unlock the door with the transmitter.

CAUTION:
Avoid trying to start the engine while the system is armed.

B070D04GK-AAT

Disarmed Stage

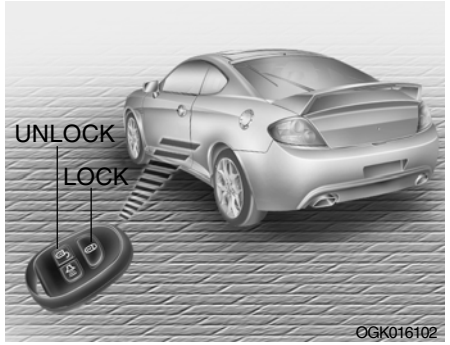

The system will be disarmed when either of the following steps are taken:

1) The driver's or passenger's door is unlocked by depressing the "UNLOCK" button on the transmitter.
2) In the middle of alarming or after alarming, it disarms after 30 seconds if the key is turned to and kept in the "ON" position.

After completing one of steps above, the turn signal light will blink twice to indicate that the system is disarmed.

NOTE:
If any door, tail gate or engine hood is not opened within 30 seconds, the system will be rearmed.

B075E02O-AAT

Alarm Warning

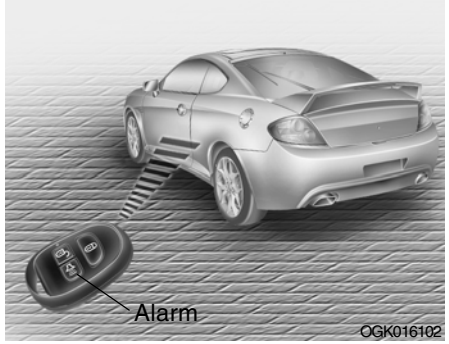

1. Push the "Alarm" button on the transmitter.
2. At the same time, the siren will sound and the turn signal lights will blink for 30 seconds.
3. To turn off the system, push any button on the transmitter.

B070F02A-GAT

Keyless Entry System (If installed)

Locking doors

1. Close all doors.
2. Push the "LOCK" button on the transmitter.
3. At the same time all doors lock, the turn signal lights will blink once to indicate that the system is armed.

Unlocking doors

1. Push the "UNLOCK" button on the transmitter.
2. At the same time all doors unlock, the turn signal lights will blink twice to indicate that the system is disarmed.

NOTE:

The transmitter will not work if any of following occur:

- **The ignition key is in ignition switch.**
- **You exceed the operating distance limit (10 m).**
- **The battery in the transmitter is weak.**
- **Other vehicles or objects may be blocking the signal.**
- **The weather is extremely cold.**
- **The transmitter is close to a radio transmitter such as a radio station or an airport which can interfere with normal operation of the transmitter.**

When the transmitter does not work correctly, open and close the door with the ignition key. If you have a problem with the transmitter, contact an authorized Hyundai Dealer.

NOTE:

Keep the transmitter away from water or any liquid. If the keyless entry system is inoperative due to exposure to water or liquids, it will not be covered by your manufacturer vehicle warranty.

B070E03GK-GAT

Replacing the battery

When the transmitter's battery begins to get weak, it may take several pushes on the button to lock or unlock the doors, and the LED will not light. Replace the battery as soon as possible.

Battery type : CR2016

Replacement instructions:

1. Carefully separate the case with a blade screwdriver as shown in the illustration.

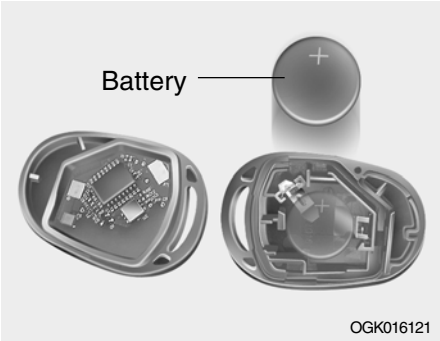

2. Remove the old battery from the case and note the polarity. Make sure the polarity of the new battery is the same (+side facing up), then insert it in the transmitter.
3. Installation is the reverse order of disassembly.

NOTE:

Install a new battery within 30 seconds after removing the old one. If installing a new battery takes more than 30 seconds, take the following steps.

1) Turn the ignition key to the "ACC" position.
2) Make sure that the turn signal lights blink once by pushing the "LOCK" or "UNLOCK" button on the transmitter.

POWER WINDOW

B050A03GK-AAT

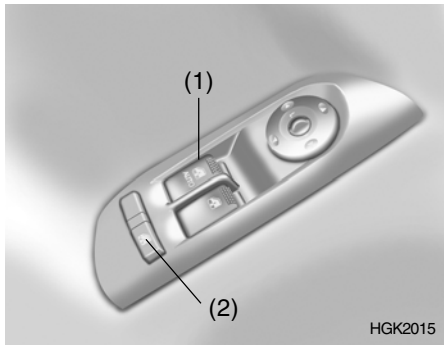

The power windows operate only when the ignition key is in the "ON" position. The main switches are located on the driver's arm rest and control the front windows on the respective sides of the vehicle. The windows may be opened by depressing the front portion of the switch. To stop at the desired opening, release the switch. The window may be closed by pulling the front portion of the switch. To open the window on the driver's side, press the switch(1) half-way down. The window moves as long as the switch is operated. To fully open the driver's window automatically, press the switch fully down. In automatic operation, the window will fully open even if you let go of the switch.

To stop at the desired opening, pull up and release the switch. In order to prevent operation of the passenger front window by the passenger, a window lock switch (2) is provided on the arm rest of the driver's door. To disable the passenger's power window, push the window lock switch. To revert to normal operation, push in on the window lock switch again.

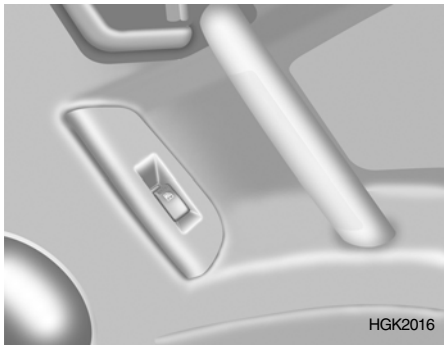
HGK2016

NOTE:
The power windows can be operated for 30 seconds after the ignition key is turned to the "ACC" or "LOCK" positions, or removed from the ignition switch. If the front doors are opened during this 30 second period, the power windows can no longer be operated without the ignition key turned to the "ON" position.

WARNING:
1) Be careful that someone's head, hands and body are not trapped by a closing window.
2) Never try to operate the main switch on the driver's door and the individual door window switch in opposing directions at the same time. If this is done, the window will stop and cannot be opened or closed.
3) Do not leave children alone in the car. Always remove the ignition key for their safety.

B080A01FC-GAT

Adjustable Seats

WARNING:
Never attempt to adjust the seat while the vehicle is moving. This could result in loss of control or an accident which may cause death, serious injury, or property damage.

B080B02FC-GAT

FRONT SEATS

Adjusting Seat Forward and Rearward

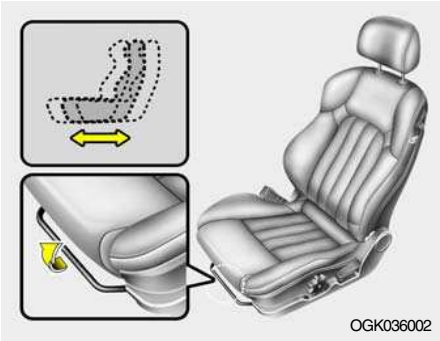

To move the seat toward the front or rear, pull the lock release lever upward. This will release the seat on its track so you can move it forward or rearward to the desired position. When you find the position you want, release the lever and slide the seat forward or rearward on its track until it locks into the desired position and cannot be moved further.

WARNING:
To ensure the seat is locked securely, attempt to move the seat forward or rearward without using the lock release lever.

B080C01A-AAT

Adjusting Seatback Angle

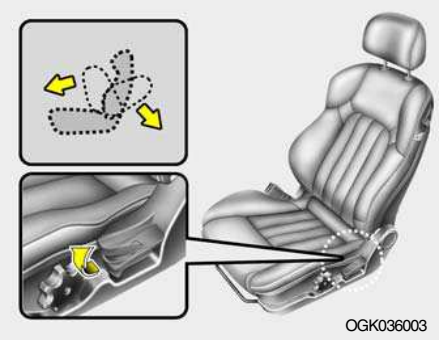

To recline the seatback, lean forward to take your weight off it, then pull up on the recliner control lever at the outside edge of the seat. Now lean back until the desired seatback angle is achieved. To lock the seatback into position, release the recliner control lever.

WARNING:
To minimize risk of severe injury in the event of a collision or a sudden stop, both the driver's and passenger's seatbacks should always be in an upright position while the vehicle is in motion. The protection provided by the seat belts and airbags in a frontal collision may be reduced significantly when the seat backs are reclined. There is greater risk that the driver and passenger will slide under the seat belt which may result in serious injury if a crash occurs when the seatbacks are reclined. The seat belt cannot provide full protection to an occupant if the seat back is reclined.

B080D02JM-AAT

Adjustable Headrests

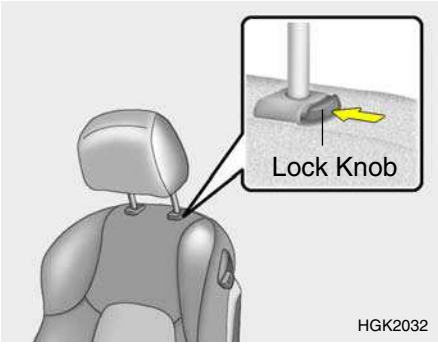

Headrests are designed to help reduce the risk of neck injuries.

To raise the headrest, pull it up. To lower it, push it down while pressing the lock knob. To remove the headrest, raise it as far as it can go then press the lock knob while pulling upward.

WARNING:

- **For maximum effectiveness in case of an accident, the headrest should be adjusted so the middle of the headrest is at the same height as the top of the occupant's eyes. The use of a cushion that holds the body away from the seatback is not recommended.**

- **Do not operate the vehicle with the headrests removed as severe injury to an occupant may occur in the event of an accident. Headrests may provide protection against severe neck injuries when properly adjusted.**
- **Do not adjust the headrest height while the vehicle is in motion.**

B080E01F-AAT

Lumbar Support Control (Driver's seat only) (If Installed)

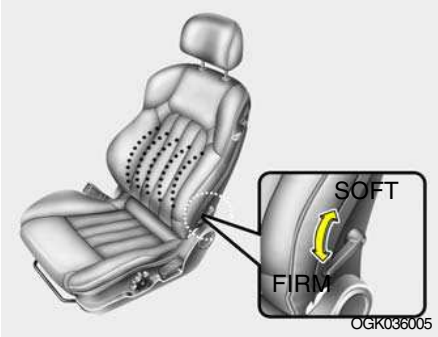

The driver's seat is equipped with adjustable lumbar support.
To increase the amount of lumbar support, pull the lever forward.
To decrease it, push the lever toward the rear.

B080F01F-AAT

Seat Cushion Height Adjustment (Driver's Seat Only) (If Installed)

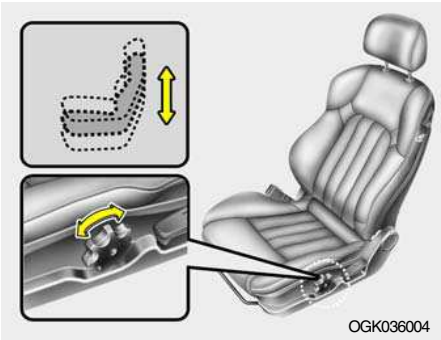

To raise or lower the front part of the seat cushion, turn the knob forward or rearward.

B100A01GK-GAT

Seat Warmer (If Installed)

The seat warmer is provided to warm the front seats during cold weather. With the ignition key in the "ON" position, push either of the switches to warm the driver's seat or the passenger's seat.
During mild weather or under conditions where the operation of the seat warmer is not needed, keep the switches in the "OFF" position.

NOTE:

- **The seat warmer may not operate if ambient temperature is warm enough.**
- **If the seat warmer doesn't work when the ambient temperature is lower than 24.5°C (76.1°F), it must be checked at an authorized dealer.**

WARNING:

Be very careful not to injure by low temperature burn or an attack of fever as following occupants; infants, children, old man, drunken man, people who is taken sleeping drug or cold remedy.

B130A01GK-AAT

Rear Seat Entry (Walk in device)

The driver and front passenger's seatbacks should be tilted to enter the rear seat.

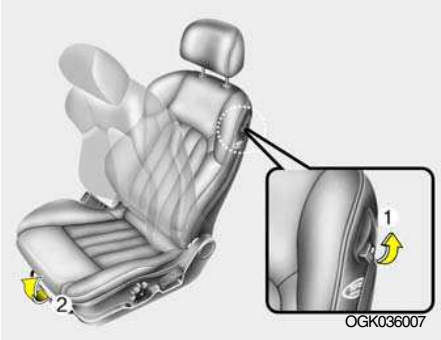

By pulling up the walk in device lever (1) at the left-upper side of the driver side seatback, the seatback will tilt forward. Then pull the lock release lever (2) up to move the seat forward.

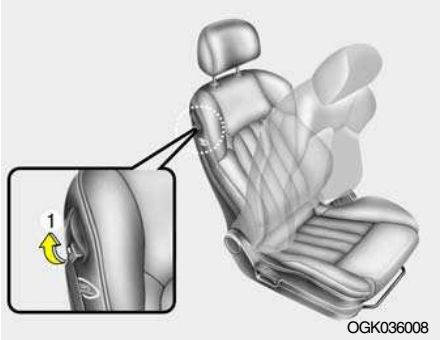

By pulling up the walk in device lever (1) at the right-upper side of the passenger side seatback, the seatback will tilt forward. Then push the seat forward to allow the occupants to enter.

Recliner Memory

By pulling up the walk in device lever (1), the seatback is reclined and returned to the original position.

WARNING:
Don't drive with the passenger side seatback reclined. It is dangerous to move it while driving. Be sure the seatback is caterred firmly before driving.

B129A01F-AAT

Rear Seat Positions

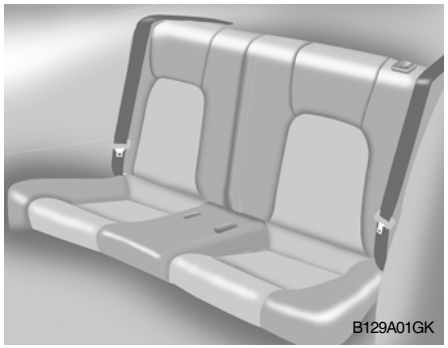

WARNING:
This vehicle contains two rear seating positions only and a seat belt for each seating position. Thus, never permit more than two occupants to ride in the rear seat because an unrestrained occupant could be seriously injured or killed in the event of a vehicle crash.

B099A01GK-AAT

Before Folding the Rear Seats

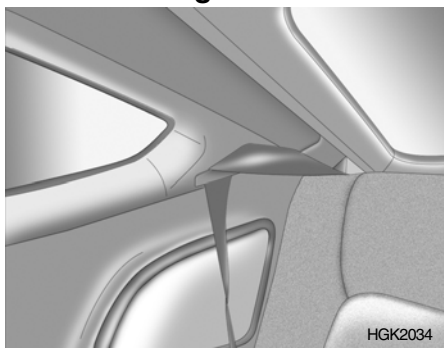

In order to prevent the shoulder belt from being damaged while folding the rear seat, the shoulder belt must be passed through the hanger to keep it out of the way.

CAUTION:

- **Seat belts must be removed from the hanger when in use.**

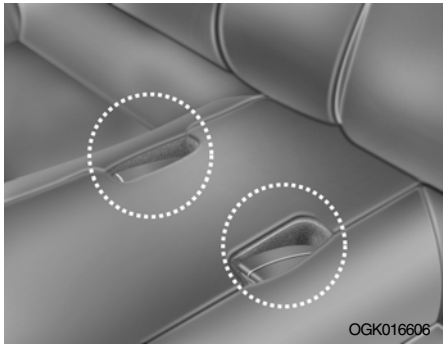

- **Before folding the seatback, insert the buckle in the pocket. This can prevent the buckle from being damaged by seatback.**

B110A02S-AAT

Folding Rear Seatbacks

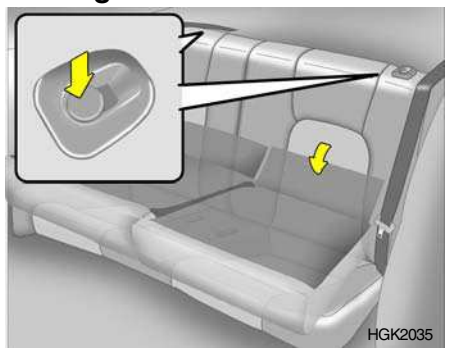

The rear seatbacks may be folded to facilitate carrying long items or to increase the luggage capacity of the vehicle.

- To unlock the seatback, push the seatback locking button, then pull forward on the seatback panel.
- When you return the seatback to its upright position, always be sure it has locked into position by pulling and pushing on the top of the seatback.

WARNING:

The purpose of the fold-down rear seatbacks is to allow you to carry longer objects than could otherwise be accommodated. Never allow passengers to sit on top of the folded down seat back while the car is moving as this is not a proper seating position and no seat belts are available for use. This could result in injury in case of an accident or sudden stop. Objects carried on the folded down seatback should not extend higher than the top of the front seats. This could allow cargo to slide forward and cause injury or damage during sudden stops.

B140A01S-AAT

Rear Seat Warning

For the safety of all passengers, luggage or other cargo should not be piled higher than the top of the seatback. In addition, do not place objects on the rear shelf as they may move forward during braking or in an accident and strike vehicle passengers.

B150A02A-GAT

Seat Belt Precautions

All occupants of the vehicle should wear their seat belts at all times. Indeed, your province's laws may require that some or all occupants of the vehicle use seat belts.
The possibility of injury or the severity of injury in an accident will be decreased if this elementary safety precaution is observed. In addition, follow the other instructions provided in this section.

B150B01Y-GAT

Infant or Small Child

Some countries require the use of child restraint systems for infants and small children. Whether this is required by law or not, it is strongly recommended that a child restraint seat or infant restraint system be used for infants or small children weighing less than 18 kilograms (40 pounds).

NOTE:

Small children are best protected in an accident when properly restrained by a child restraint system.

B150C02A-AAT
Larger Children

Children who are too large for child restraint systems should always occupy the rear seat and use the available lap/shoulder belts. The lap portion should be fastened snug on the hips and as low as possible. Check belt fit periodically. A child's squirming could put the belt out of position. Children are afforded the most safety in the event of an accident when they are restrained by a proper restraint system in the rear seat. If a larger child (over age 13) must be seated in the front seat, the child should be securely restrained by the available lap/shoulder belt and the seat should be placed in the rearmost position. Children under the age of 13 should be restrained securely in the rear seat. NEVER place a child under the age of 13 in the front seat. NEVER place a rear facing child seat in the front seat of a vehicle.

B150D01A-AAT
Pregnant Women

The use of a seat belt is recommended for pregnant women to lessen the chance of injury in an accident. When a seat belt is used, the lap belt portion should be placed as low and snugly as possible on the hips, not across the abdomen. For specific recommendations, consult a physician.

B150E01A-AAT
Injured Person

A seat belt should be used when an injured person is being transported. When this is necessary, you should consult a physician for recommendations.

B150F01A-AAT
One Person Per Belt

Two people (including children) should never attempt to use a single seat belt. This could increase the severity of injuries in case of an accident.

B150G01A-AAT
Do Not Lie Down

To reduce the chance of injuries in the event of an accident and to achieve maximum effectiveness of the restraint system, all passengers should be sitting up and the front seats should be in an upright position when the car is moving. A seat belt cannot provide proper protection if the person is lying down in the rear seat or if the front seat is in a reclined position.

WARNING:
Sitting in a reclined position or lying down when your vehicle is in motion can be dangerous. Even if you buckle up, your seat belts can't do their job when you're reclined.
The shoulder belt can't do its job because it won't be against your body. Instead, it will be in front of you. In a crash you could go into it with great force, receiving serious neck or other injuries.
The lap belt can't do its job either. In a crash the belt could go up over your abdomen. The belt forces would be applied there, not at your strong pelvic bones.
This could cause serious internal injuries.
For proper protection when the vehicle is in motion, have the seatback upright. Then sit back in the seat and wear your seat belt properly.

B160A01A-AAT

CARE OF SEAT BELTS

Seat belt systems should never be disassembled or modified. In addition, care should be taken to assure that seat belts and belt hardware are not damaged by seat hinges, doors or other abuse.

WARNING:
When you return the rear seatback to its upright position after the rear seatback was folded down, be careful not to damage the seat belt webbing or buckle. Be sure that the webbing or buckle does not get caught or pinched in the rear seat.

B160B01A-AAT

Periodic Inspection

It is recommended that all seat belts be inspected periodically for wear or damage of any kind. Parts of the system that are damaged should be replaced as soon as possible.

B160C01A-AAT

Keep Belts Clean and Dry

Seat belts should be kept clean and dry. If belts become dirty, they can be cleaned by using a mild soap solution and warm water. Bleach, dye, strong detergents or abrasives should not be used because they may damage and weaken the fabric.

B160D01A-AAT

When to Replace Seat Belts

entire in-use seat belt assembly or assemblies should be replaced if the vehicle has been involved in an accident. This should be done even if no damage is visible. Additional questions concerning seat belt operation should be directed to your Hyundai Dealer.

B170A04A-AAT

Height Adjustable Front Seat Shoulder Belt (If installed)

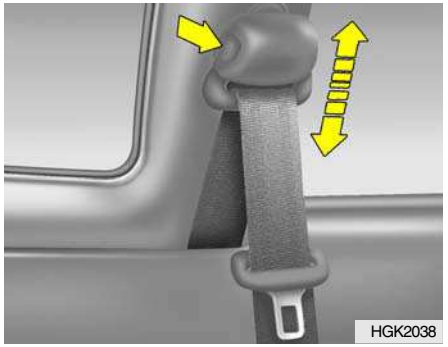

You can adjust the height of the shoulder belt anchor to one of the 4 positions for maximum comfort and safety.
If the height of the adjusting seat belt is too near your neck, you will not be getting the most effective protection. The shoulder portion should be adjusted so that it lies across your chest and midway over your shoulder nearest the door and not your neck.
To adjust the height of the seat belt anchor, lower or raise the height adjuster into an appropriate position. To raise the height adjuster, pull it up. To lower it, push it down while pressing the height adjuster button.

Release the button to lock the anchor into position. Try sliding the height adjuster to make sure that it has locked into the position.

WARNING:
- **The height adjuster must be in the locked position when the vehicle is moving.**
- **The misadjustment of height of the shoulder belt could reduce the effectiveness of the seat belt in a crash.**

B180A02A-GAT

SEAT BELTS-Driver's and Passenger's 3-Point System with Webbing Clamp Locking Retractor (If Installed)

To Fasten Your Belt

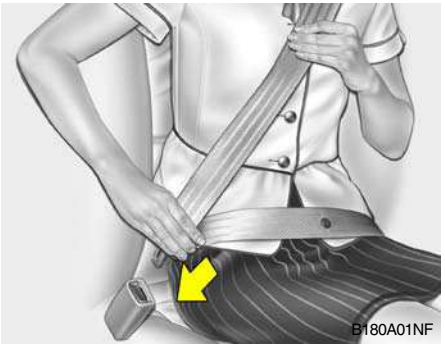

To fasten your seat belt, pull it out of the retractor and insert the metal tab into the buckle. There will be an audible "click" when the tab locks into the buckle.
The seat belt automatically adjusts to the proper length only after the lap belt is adjusted manually so that it fits snugly around your hips. If you lean forward in a slow, easy motion, the belt will extend and let you move around.

If there is a sudden stop or impact, however, the belt will lock into position. It will also lock if you try to lean forward too quickly.

B180A02Y-GAT

SEAT BELTS-3-Point System with Emergency Locking Retractor (If Installed)

To Fasten Your Belt

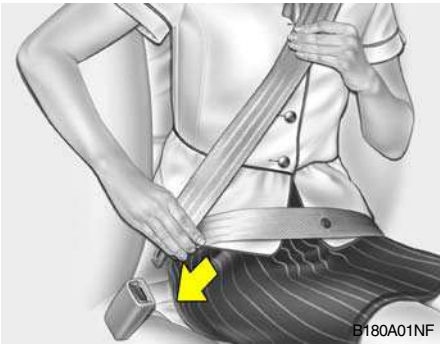

To fasten your seat belt, pull it out of the retractor and insert the metal tab into the buckle. There will be an audible "click" when the tab locks into the buckle.

The seat belt automatically adjusts to the proper length only after the lap belt is adjusted manually so that it fits snugly around your hips. If you lean forward in a slow, easy motion, the belt will extend and let you move around. If there is a sudden stop or impact, however, the belt will lock into position. It will also lock if you try to lean forward too quickly. Check to make sure that the belt is properly locked and that the belt is not twisted.

B200A01S-GAT

Adjusting Your Seat Belt

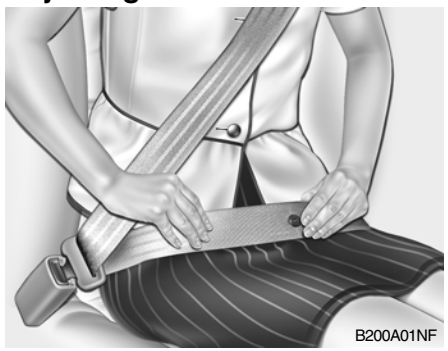

You should place the belt as low as possible on your hips, not on your waist. If the belt is located too high on your body, you could slide under it in case of accident or a sudden stop. This could result of death, serious injury or property damage. Both arms should not be under or over the belt. Rather, one should be over and the other under, as shown in the illustration.

Never wear the seat belt under the arm nearest the door.

B210A01A-AAT

To Release the Seat Belt

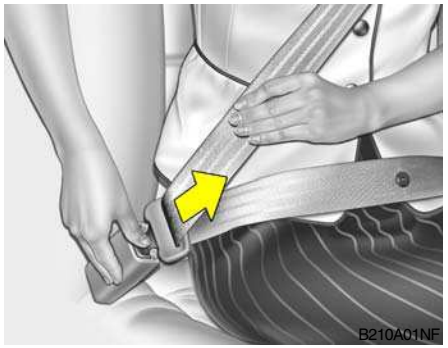

The seat belt is released by pressing the release button in the locking buckle. When it is released, the belt should automatically draw back into the retractor.
If this does not happen, check the belt to be sure it is not twisted, then try again.

B230A03P-GAT

(If Installed)

Children riding in the car should sit in the rear seat and must always be properly restrained to minimize the risk of injury in an accident, sudden stop or sudden maneuver. According to accident statistics, children are safer when properly restrained in the rear seats than in the front seat. Larger children not in a child restraint should use one of the seat belts provided.
You are required by law to use safety restraints for children. If small children ride in your vehicle you must put them in a child restraint system (safety seat). Children could be injured or killed in a crash if their restraints are not properly secured. For small children and babies, a child seat or infant seat must be used. Before buying a particular child restraint system, make sure it fits your car and seat belts, and fits your child. Follow all the instructions provided by the manufacturer when installing the child restraint system.

WARNING:

- **A child restraint system must be placed in the rear seat. Never install a child or infant seat on the front passenger's seat. Should an accident occur and cause the passenger's side airbag to deploy, it could severely injure or kill an infant or child seated in an infant or child seat. Thus, only use a child restraint in the rear seat of your vehicle.**
- **Since a safety belt or child restraint system can become very hot if it is left in a closed vehicle, be sure to check the seat cover and buckles before placing a child there.**
- **When the child restraint system is not in use, fasten it with a safety belt so that it will not be thrown forward in the case of a sudden stop or an accident.**

- **Children who are too large to be in a child restraint should sit in the rear seat and be restrained with the available lap/shoulder belts. Never allow children to ride in the front passenger seat.**
- **Always make sure that the shoulder belt portion of the outboard lap/shoulder belt is positioned midway over the shoulder, never across the neck or behind the back. Moving the child closer to the center of the vehicle may help provide a good shoulder belt fit. The lap belt portion of the lap/shoulder belt or the center seat lap belt must always be positioned as low as possible on the child's hips and as snug as possible.**
- **If the seat belt will not properly fit the child, Hyundai recommends the use of an approved booster seat in the rear seat in order to raise the child's seating height so that the seat belt will properly fit the child.**
- **Never allow a child to stand up or kneel on the seat.**

- **Never use an infant carrier or child safety seat that "hooks" over a seatback; it may not provide adequate security in an accident.**
- **Never allow a child to be held in a person's arms while they are in a moving vehicle, as this could result in serious injury to the child in the event of an accident or a sudden stop. Holding a child in a moving vehicle does not provide the child with any means of protection during an accident, even if the person holding the child is wearing a seat belt.**
- **If the child restraint seat is not anchored properly, the risk of a child being seriously injured or killed in a collision greatly increases.**

B230G01A-GAT

Installation on the Outboard Rear Seats

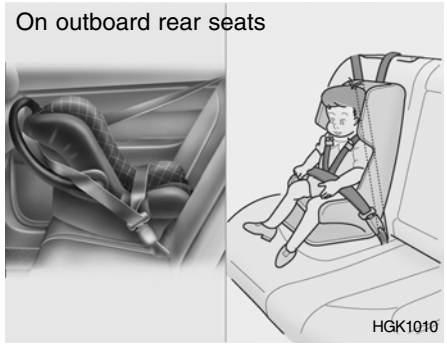

To install a child restraint system in the outboard rear seats, extend the shoulder/lap belt from its retractor. Install the child restraint system, buckle the seat belt and allow the seat belt to take up any slack. Make sure that the lap portion of the belt is tight around the child restraint system and the shoulder portion of the belt is positioned so that it cannot interfere with the child's head or neck. After installation of the child restraint system, try to move it in all directions to be sure the child restraint system is securely installed.

If you need to tighten the belt, pull more webbing toward the retractor. When you unbuckle the seat belt and allow it to retract, the retractor will automatically revert back to its normal seated passenger emergency locking usage condition.

NOTE:

- **Before installing the child restraint system, read the instructions supplied by the child restraint system manufacturer.**
- **If the seat belt does not operate as described, have the system checked immediately by your authorized Hyundai dealer.**

WARNING:

Do not install any child restraint system in the front passenger seat. Should an accident occur and cause the passenger side airbag to deploy, it could severely injure or kill an infant or child seated in an infant or child seat. Therefore, only use a child restraint system in the rear seat of your vehicle.

B230H04GK-GAT

Child Seat Restraint Suitability For Seat Position Using the Seat Belt

Use child safety seats that have been officially approved and are appropriate for your children.

Age Group	Seating Position		
	1st Passenger	Rear Outboard	Rear Center
0 : Up to 10 kg (0 ~ 9 months)	X	X	N/A
0+ : Up to 13 kg (0 ~ 2 years)	X	X	N/A
I : 9kg to 18kg (9 months ~ 4 years)	X	L1	N/A
II & III : 15kg to 36kg (4 ~ 12 years)	X	X	N/A

U: Suitable for "universal" category restraints approved for use in this mass group

UF: Suitable for forward-facing "universal" category restraints approved for use in this mass group

L1: Suitable for "Römer ISOFIX GR1" approved for use in this mass group
(Approval No: E1 R44-03301133)

X: Seat position not suitable for children in this mass group

N/A: No seating position is provided

B230B02GK-GAT

Using a Child Restraint System with "Tether Anchorage" System

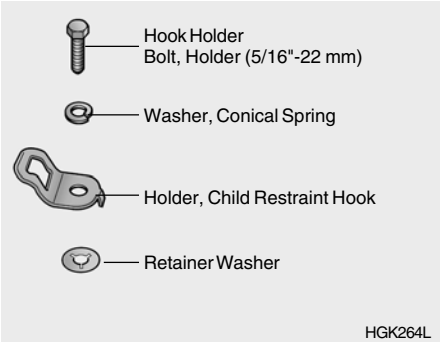

For small children and babies, the use of a child seat or infant seat is required. This child seat or infant seat should be of appropriate size for the child and should be installed in accordance with the manufacturer's instructions. It is further required that the seat be placed in the vehicle's rear seat since this can make an important contribution to safety. Your vehicle is provided with two child restraint hook holders for installing the child seat or infant seat.

B230E03GK-GAT

Securing a Child Restraint System with "Tether Anchorage" System

Two child restraint hook holders are located on the rear luggage compartment floor.

1. Open the tether anchor cover on the rear luggage compartment floor.
2. Route the child restraint seat strap over the seatback.
   For vehicles with adjustable headrests, route the tether strap under the headrest and between the headrest posts, otherwise route the tether strap over the top of the seatback.

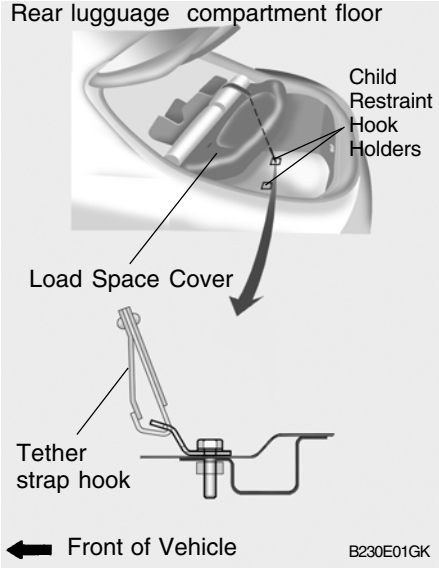

3. Remove the load space cover.
4. Connect the tether strap hook to the child restraint hook holder and tighten to secure the seat.

B230D01GK-GAT

Securing a Child Restraint System with "ISOFIX" System and "Tether Anchorage" System

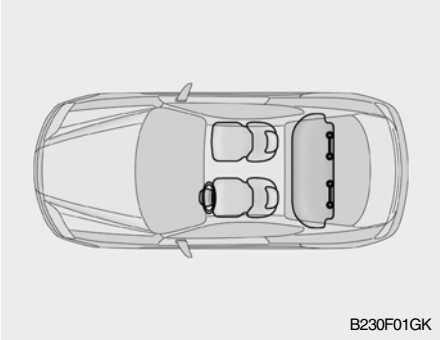
B230F01GK

ISOFIX is a standardised method of fitting child seats that eliminates the need to use the standard adult seat belt to secure the seat in the vehicle. This enables a much more secure and positive location with the added benefit of easier and quicker installation.

An ISOFIX-seat can only be installed if it has vehicle-specific approval in accordance with the requirements of ECE-R44. For your Hyundai, the Hyundai ISOFIX GR1 / Hyundai Duo / Römer ISOFIX GR1 and the Römer Duo ISOFIX / Britax Duo ISOFIX is approved according to the requirement ECE-R44. This seat has been tested extensively by Hyundai and is recommended for your Hyundai.

NOTE:

At present, this seat is the only one complying with that provision. In case that other manufacturers will furnish proof of a respective certification, Hyundai is going to evaluate this seat carefully and will give a recommendation provided that seat complies to the law. Please ask your Hyundai dealer in this respect.

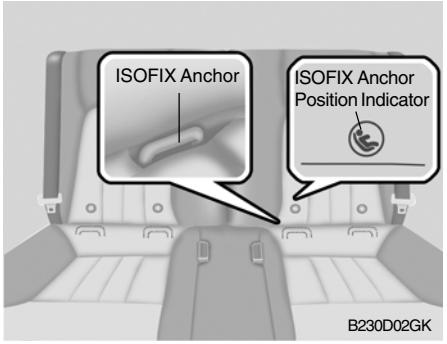

B230D02GK

On each side of the rear seat, between the cushion and backrest, are located a pair of ISOFIX anchorage points together with a top tether mounting on the luggage compartment. During the installing, the seat has to be engaged at the anchorage-points in a way you can hear it clicking (check by pulling!) and has to be fixed with the Top Tether-belt on the belonging point in the luggage-compartment. The installing and the use of a child-seat has to be done according to the installing-manual, which is added to the ISOFIX-seat.

NOTE:
An ISOFIX-child-seat can only be installed if the seat has a vehicle-specific approval according to ECE-R44. Before using the ISOFIX-child-seat, which was bought for another car, ask your Hyundai-dealer whether this seat-type is approved and recommended for your Hyundai.

To secure the child restraint seat

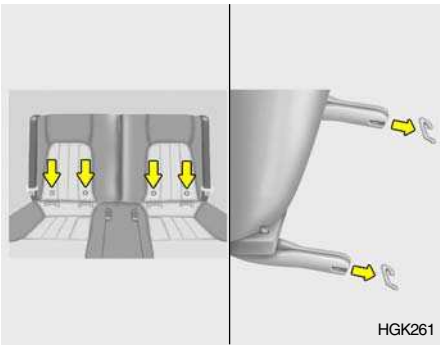

1. To engage the child restraint seat to the ISOFIX anchor, insert the child restraint seat latch into the ISOFIX anchor. Listen for the audible "click" sound.
2. Connect the tether strap hook to the child restraint hook holder and tighten to secure the seat. Refer to "Securing a Child Restraint System with the Tether Anchorage System" on page 1-28.

WARNING:
- **There is no center rear seating position.**
- **Do not install a child restraint seat at the center of the rear seat using the vehicle's ISOFIX anchors. The ISOFIX anchors are only provided for the left and right outboard of the rear seat. Do not misuse the ISOFIX anchors by attempting to attach a child restraint seat in the middle of the rear seat to the ISOFIX anchors. In a crash, the child restraint seat ISOFIX attachments may not be strong enough to secure the child restraint seat properly in the center of the rear seat and may break, causing serious injury or death.**
- **When using the vehicle's "ISOFIX" system to install a child restraint system in the rear seat, all unused vehicle rear seat belt metal latch plates or tabs must be latched securely in their seat belt buckles and the seat belt webbing must be retracted behind the child restraint to prevent the child from reaching and taking hold of unretracted seat belts. Unlatched metal latch plates or tabs may allow the child to reach the unretracted seat belts which may result in strangulation and a serious injury or death to the child in the child restraint.**
- **Do not mount more than one child restraint to a child restraint lower anchorage point. The improper increased load may cause the anchorage points or tether anchor to break, causing serious injury or death.**
- **Attach the ISOFIX or ISOFIX-compatible child restraint seat only to the appropriate locations shown in the illustration.**

o Always follow the installation and use instructions provided by the manufacturer of the child restraint.

B180B02GK-GAT

Pre-tensioner Seat Belt (If Installed)

Your Hyundai vehicle is equipped with driver's and front passenger's pre-tensioner seat belts. The purpose of the pre-tensioner is to make sure that the seat belts fit tightly against the occupant's body in certain frontal collisions.

The pre-tensioner seat belts can be activated alone or, where the frontal collision is severe enough, together with the airbags.

The pre-tensioner seat belt operates in a similiar way as an Emergency Locking Retractor (ELR) type of seat belt. When the vehicle stops suddenly, or if the occupant tries to lean forward too quickly, the seat belt retractor will lock into position. In certain frontal collisions, the pre-tensioner will activate and pull the seat belt into tighter contact against the occupant's body.

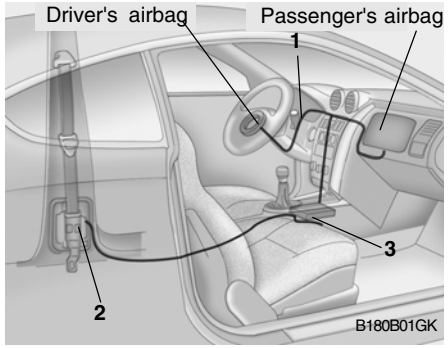

The seat belt pre-tensioner system consists mainly of the following components.

Their locations are shown in the illustration.

1. SRS airbag warning light
2. Seat belt pre-tensioner assembly
3. SRS control module

WARNING:

To obtain maximum benefit from a pre-tensioner seat belt:

1. The seat belt must be worn correctly.
2. The seat belt must be adjusted to the correct position.

NOTE:

- **Both the driver's and front passenger's pre-tensioner seat belts will be activated in certain frontal collisions. The pre-tensioner seat belts can be activated alone or, where the frontal collision is severe enough, together with the airbags.**
- **When the pre-tensioner seat belts are activated, a loud noise may be heard and fine dust, which may appear to be smoke, may be visible in the passenger compartment. These are normal operating conditions and are not hazardous.**
- **Although it is harmless, the fine dust may cause skin irritation and should not be breathed for prolonged periods. Wash your hands and face thoroughly after an accident in which the pre-tensioner seat belts were activated.**

CAUTION:

- **Because the sensor that activates the SRS airbag is connected with pre-tensioner seat belt, the SRS airbag warning light AIR BAG on the instrument panel will come on for approximately 6 seconds after the ignition key has been turned to the "ON" position, and then it should turn off.**
- **If pre-tensioner seat belt is not working properly, this warning light will illuminate even if there is no malfunction of the SRS airbag. If the SRS airbag warning light does not illuminate when the ignition key is turned to "ON", or if it remains illuminated after coming for approximately 6 seconds, or if it illuminates while the vehicle is being driven, please have an authorized Hyundai dealer inspect the pre-tensioner seat belts and SRS airbag system as soon as possible.**

WARNING:

- Pre-tensioners are designed to operate only one time. After activation, pre-tensioner seat belts must be replaced. All seat belts, of any type, should always be replaced after they have been worn during a collision.
- The pre-tensioner seat belt assembly mechanisms become hot during activation. Do not touch the pre-tensioner seat belt assemblies for several minutes after they have been activated.
- Do not attempt to inspect or replace the pre-tensioner seat belts yourself. This must be done by an authorized Hyundai dealer.
- Do not strike the pre-tensioner seat belt assemblies.
- Do not attempt to service or repair the pre-tensioner seat belt system in any manner.
- Improper handling of the pre-tensioner seat belt assemblies, and failure to heed the warnings to not strike, modify, inspect, replace, service or repair the pre-tensioner seat belt assemblies may lead to improper operation or inadvertent activation and serious injury.
- Always wear seat belts when driving or riding in a motor vehicle.

B240D01GK-GAT

(If Installed)

1. Driver's front airbag
2. Passenger's front airbag
3. Front side impact airbag

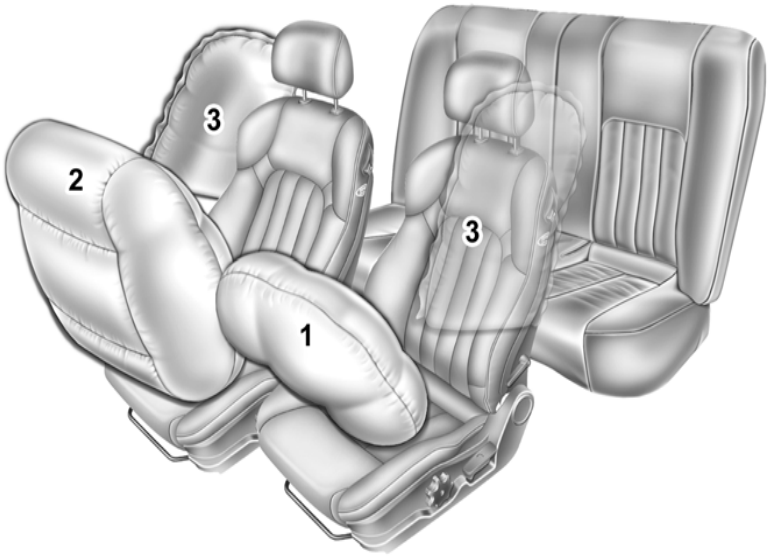

OGK036022

B240A02GK-GAT

Driver's and Passenger's Front Airbag

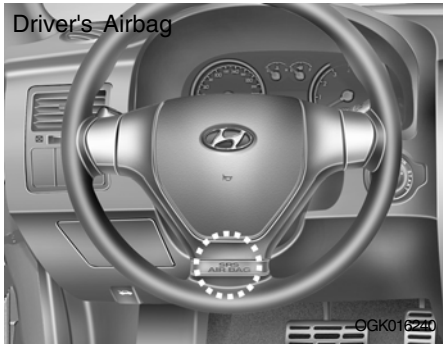

Your Hyundai is equipped with a Supplemental Restraint (Airbag) System. The indications of the system's presence are the letters "SRS AIR BAG" embossed on the airbag pad cover in the steering wheel and the front passenger's panel pad above the glove box.

The Hyundai SRS consists of airbags installed under the pad covers in the center of the steering wheel and the front passenger's panel above the glove box.

The purpose of the SRS is to provide the vehicle's driver or the front passenger with additional protection than that offered by the seat belt system alone, in case of a frontal impact of sufficient severity.

NOTE:
Be sure to read information about the SRS on the labels provided in the front of the sun visor and in the glove box.

WARNING:

- **As its name implies, the SRS is designed to work with, and be supplemental to, the driver's and the passenger's three point seat belt systems and is not a substitute for them. Therefore your seat belts must be worn at all times while the vehicle is in motion. The airbags deploy only in certain frontal impact conditions severe enough to cause significant injury to the vehicle occupants.**
- **The SRS is designed to deploy the airbags only when an impact is sufficiently severe and when the impact angle is less than 30° from the forward longitudinal axis of the vehicle and will not deploy in side, rear or rollover impacts. Additionally, the airbags will only deploy once. Thus, seat belts must be worn at all times.**

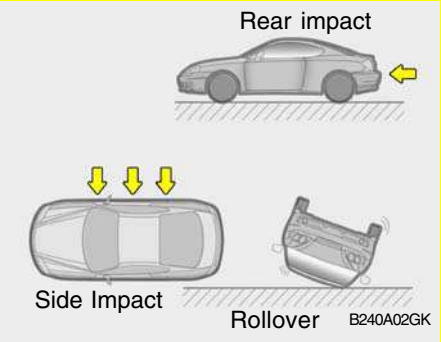

- **Front airbags are not intended to deploy in side-impact, rear-impact or rollover crashes. In addition, airbags will not deploy in frontal crashes below the deployment threshold speed.**

- The driver should sit back as far as possible while still maintaining control of the vehicle. If you are sitting too close to the airbag, it can cause death or serious injury when it inflates.
- No objects should be placed over or near the airbag modules on the steering wheel, instrument panel, and the front passenger's panel above the glove box, because any such object could cause harm if the vehicle is in a crash severe enough to cause the airbags to deploy.
- If the airbags deploy, they must be replaced by an authorized Hyundai dealer.
- Do not tamper with or disconnect SRS wiring, or other components of the SRS system. Doing so could result in injury, due to accidental firing of the airbags or by rendering the SRS inoperative.

- Do not install a child restraint system in the front passenger seat position. A child restraint system must never be placed in the front seat. The infant or child could be severely injured or killed by an airbag deployment in case of an accident.
- Do not allow children to ride in the front passenger seat. If older children (teenagers and older) must ride in the front seat, make sure they are always properly belted and that the seat is moved back as far as possible.
- For maximum safety protection in all types of crashes, all occupants including the driver should always wear their seat belts whether or not an airbag is also provided at their seating position to minimize the risk of severe injury or death in the event of a crash. Do not sit or lean unnecessarily close to the airbag while the vehicle is in motion.

- The SRS airbag system must deploy very rapidly to provide protection in a crash. If an occupant is out of position because of not wearing a seat belt, the airbag may forcefully contact the occupant causing serious or fatal injuries.

B240B03GK-GAT

SRS Components and Functions

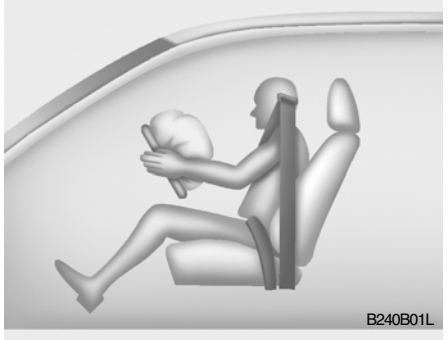

The SRS consists of the following components:

- Driver's Airbag Module
- Passenger's Airbag Module
- SRS Service Reminder Indicator (SRI)
- SRS Control Module (SRSCM)

The SRSCM continually monitors all elements while the ignition is "ON" to determine if a frontal or near-frontal impact is severe enough to require airbag deployment.

The SRS service reminder indicator (SRI) on the instrument panel will illuminate for about 6 seconds after the ignition key is turned to the "ON" position or after the engine is started, after which the SRI should go out.

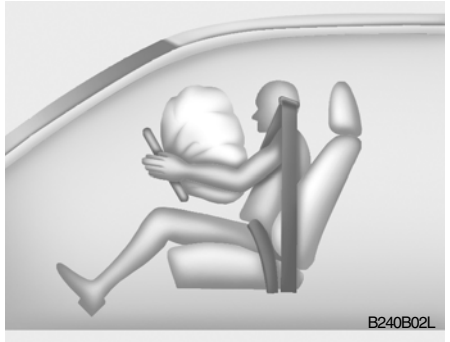

The airbag modules are located both in the center of the steering wheel and in the front passenger's panel above the glove box. When the SRSCM detects a considerable impact to the front of the vehicle, it will automatically deploy the airbags.

Upon deployment, tear seams molded directly into the pad covers will separate under pressure from the expansion of the airbags. Further opening of the covers then allows full inflation of the airbags.

A fully inflated airbag in combination with a properly worn seat belt slows the driver's or the passenger's forward motion, thus reducing the risk of head or chest injury.

After complete inflation, the airbag immediately starts deflating, enabling the driver to maintain forward visibility.

CAUTION:

- **Do not install or place any accessories (drink holder, cassette holder, sticker, etc.) on the front passenger's panel above the glove box in a vehicle with a passenger's airbag. Such objects may become dangerous projectiles and cause injury if the passenger's airbag inflates.**

- **When installing a container of liquid air freshener inside a vehicle, do not place it near the instrument cluster nor on the instrument panel pad surface. If there is any leakage from the air freshener onto these areas (Instrument cluster, instrument panel pad or air ventilator), it may damage these parts. If the liquid from air freshener does leak onto these areas, wash them with water immediately.**

WARNING:

- **When the SRS is activated, there may be a loud noise and fine dust will be released throughout the vehicle. These conditions are normal and are not hazardous. However, the fine dust generated during airbag deployment may cause skin irritation. Wash all exposed skin areas thoroughly with lukewarm water and a mild soap after an accident in which the airbags were deployed.**
- **The SRS can function only when the ignition key is in the "ON" position.**
  If the SRS is not working properly,
  (1) The SRS SRI does not come on when the ignition key is turned to the "ON" position or after the engine is started.
  (2) The SRS SRI blinks for a second and remains on after illuminating for about 6 seconds when the ignition key is turned to the "ON" position or after he engine is started.

(3) The SRS SRI illuminates while driving.
If this occurs, have your vehicle immediately inspected by your Hyundai dealer.

- **Before you replace a fuse or disconnect a battery terminal, turn the ignition key to the "LOCK" position or remove the ignition key. Never remove or replace the air bag related fuse(s) when the ignition key is in the "ON" position. Failure to heed this warning will cause the SRS SRI to illuminate.**

B990B01MC-AAT

Side Impact Airbag (If Installed)

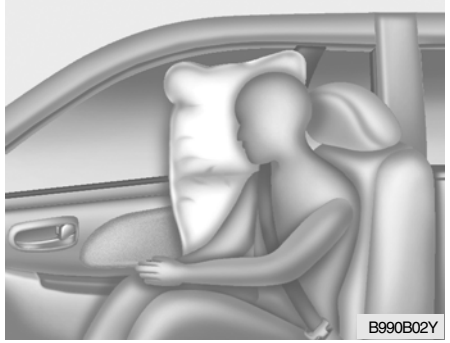

Your Hyundai is equipped with a side impact airbag in each front seat. The purpose of the airbag is to provide the vehicle's driver and/or the front passenger with additional protection than that offered by the seat belt alone. The side impact airbags are designed to deploy only during certain side impact collisions, depending on the crash severity, angle, speed and point of impact. The side impact airbags are not designed to deploy in all side impact situations.

Important Safety Notes on the Side Impact Airbag system

Following is a number of safety points concerning this system which should always be observed to ensure risk of injury is reduced in an accident.

WARNING:

- **The side impact airbag is supplemental to the driver's and the passenger's seat belt systems and is not a substitute for them. Therefore your seat belts must be worn at all times while the vehicle is in motion.**
  The airbags deploy only in certain side impact conditions severe enough to cause significant injury to the vehicle occupants.
- **For best protection from the side impact airbag system and to avoid being injured by the deploying side impact airbag, both front seat occupants should sit in an upright position with the seat belt properly fastened.**

The driver's hands should be placed on the steering wheel at the 9:00 and 3:00 o'clock positions. The passenger's arms and hands should be placed on their laps.

- **Do not use any accessory seat covers.**
- **Use of seat covers could reduce or prevent the effectiveness of the system.**
- **Do not install any accessories on the side or near the side impact airbag.**
- **Do not use excessive force on the side of the seat.**
- **Do not place any objects over the airbag or between the airbag and yourself.**
- **Do not place any objects (an umbrella, bag, etc.) between the front door and the front seat. Such objects may become dangerous projectiles and cause injury if the supplemental side impact airbag inflates.**

- **To prevent unexpected deployment of the side impact air bag that may result in personal injury, avoid impact to the side impact airbag sensor when the ignition key is on.**

B240C01NF-GAT

SRS Care

The SRS is virtually maintenance-free and so there are no parts you can safely service by yourself. If the SRS SRI (Service Reminder Indicator) does not come on, or continuously remains on, have your vehicle immediately inspected by your Hyundai dealer.

Any work on the SRS system, such as removing, installing, repairing, or any work on the steering wheel must be performed by a qualified Hyundai technician. Improper handling of the SRS system may result in serious personal injury.

WARNING:

- Extreme Hazard! Do not use a rearward facing child restraint on a seat protected by an airbag in front of it!
- Do not install a child restraint system in the front passenger seat position. A child restraint system must never be placed in the front seat. The infant or child could be severely injured by an airbag deployment in case of an accident.
- Modification to SRS components or wiring, including the addition of any kind of badges to the pad covers or modifications to the body structure, can adversely affect SRS performance and lead to possible injury.
- For cleaning the airbag pad covers, use only a soft, dry cloth or one which has been moistened with plain water. Solvents or cleaners could adversely affect the airbag covers and proper deployment of the system.
- No objects should be placed over or near the airbag modules on the steering wheel, instrument panel, and the front passenger's panel above the glove box, because any such object could cause harm if the vehicle is in a crash severe enough to cause the airbags to inflate.
- If the airbags inflate, they must be replaced by an authorized Hyundai dealer.
- Do not tamper with or disconnect SRS wiring, or other components of the SRS system. Doing so could result in injury, due to accidental firing of the airbags or by rendering the SRS inoperative.
- If components of the airbag system must be discarded, or if the vehicle must be scrapped, certain safety precautions must be observed. Your Hyundai dealer knows these precautions and can give you the necessary information. Failure to follow these precautions and procedures could increase the risk of personal injury.
- If you sell your vehicle, make certain that this manual is transferred to the new owner.
- If your car was flooded and has soaked carpeting or water on flooring, you shouldn't try to start engine; have the car towed to authorized Hyundai dealer.

INSTRUMENT CLUSTER AND INDICATOR LIGHTS

B260A01GK-GAT

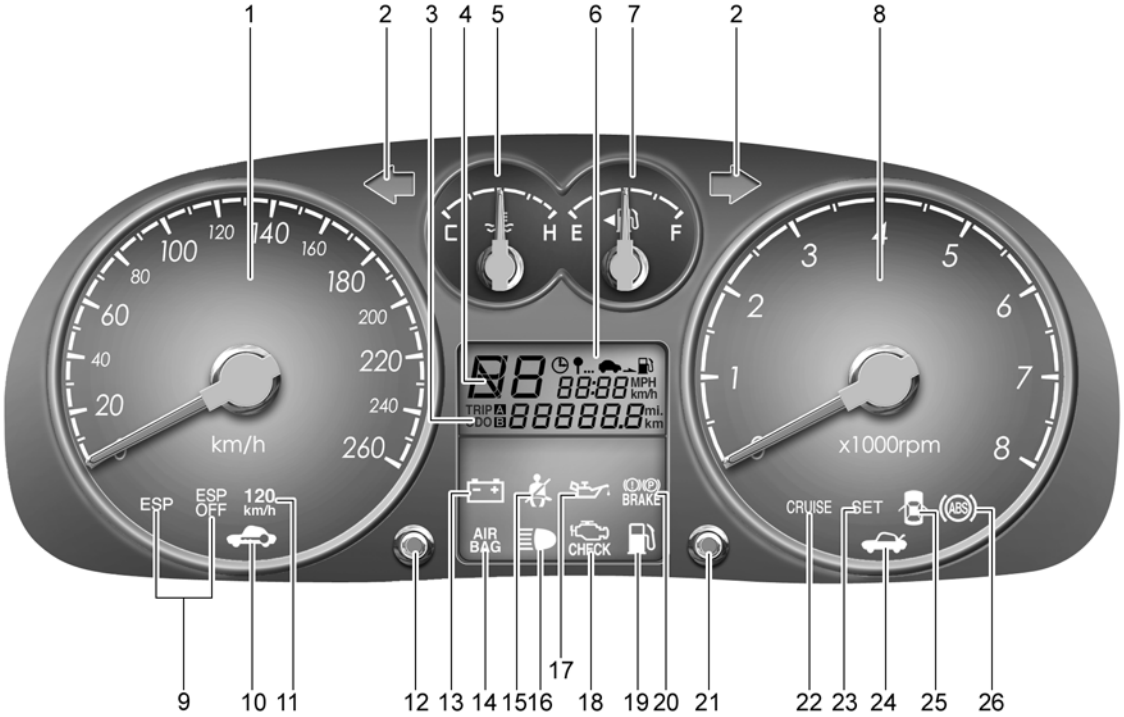

OGK016260

1. Speedometer
2. Turn Signal Indicator Light
3. Odometer/Trip Odometer
4. Automatic Transaxle Position Indicator Light (If installed)
5. Coolant Temperature Gauge
6. Trip Computer (If installed)
7. Fuel Gauge
8. Tachometer
9. Electronic Stability Program (ESP) indicator Light (If installed)
10. Immobilizer Warning Light (If installed)
11. Over Speed Warning Light (Mideast only)
12. Trip Odometer Reset Knob
13. Charging System Warning Light
14. Supplemental Restraint System (Airbag) Service Reminder Indicator (SRI) Light (If installed)
15. Seat Belt Warning Light
16. High Beam Indicator Light
17. Oil Pressure Warning Light
18. Malfunction Indicator Light (MIL) (If installed)
19. Low Fuel Warning Light
20. Parking Brake/Low Brake Fluid Level Warning Light
21. Trip Computer Reset Knob
22. CRUISE Indicator Light (If installed)
23. CRUISE SET Indicator Light (If installed)
24. Tail Gate Open Warning Light
25. Door Ajar Warning Light
26. ABS Service Reminder Indicator Light (If installed)

B260U01TA-AAT

Turn Signal Indicator Lights

The blinking green arrows on the instrument panel show the direction indicated by the turn signals. If the arrow comes on but does not blink, blinks more rapidly than normal, or does not illuminate at all, a malfunction in the turn signal system is indicated. Your dealer should be consulted for repairs.

B265C01LZ-AAT

Electronic Stability Program Indicator Lights (If installed)

The electronic stability program indicators change operation according to the ignition switch position and whether the system is in operation or not.
They will illuminate when the ignition key is turned to the "ON" position, but should go out after three seconds. If the ESP or ESP-OFF indicator stays on, take your car to your authorized Hyundai dealer and have the system checked. See section 2 for more information about the ESP.

B260U01TB-GAT

Immobilizer Warning Light (If Installed)

This indicator light comes on for some seconds after the ignition key is turned to the "ON" position. At this time, you can start the engine. The light goes out after the engine is running. In case this light goes out before you start the engine, you must turn to the "LOCK" position and restart the engine. In case this light blinks for five seconds when the ignition key is turned to "ON" position, this indicates that the immobilizer system is out of order. At this time, refer to the explanation of the Limp home procedure(See page 1-6) or consult to the Hyundai dealer.

B260Z01GK-GAT

Overspeed warning light (Mideast only)

This light illuminates when your vehicle speed reaches or exceeds 120km/h. The warning light will keep illuminating until the speed drops below 120km/h.

B260J01S-GAT

Charging System Warning Light

The charging system warning light should come on when the ignition is turned on, then go out when the engine is running. If the light stays on while the engine is running, there is a malfunction in the electrical charging system. If the light comes on while you are driving, stop, turn off the engine and check under the hood. First, make certain the generator drive belt is in place. If it is, check the tension of the belt.
And then, have the system checked by your Hyundai dealer.

CAUTION:
If the drive belt (generator belt) is loose, broken, or mission while the vehicle is driving, there may be a serious malfunction, engine could overheat because this belt also drives the water pump.

B260B01JM-AAT

SRS (Airbag) Service Reminder Indicator (SRI) (If installed)

The SRS service reminder indicator (SRI) comes on for about 6 seconds after key is turned to the "ON" position or after the engine is started, after which it will go out.

This light also comes on when the SRS is not working properly. If the SRI does not come on, or continuously remains on after operating for about 6 seconds when you turned the ignition key to the "ON" position or started the engine, or if it comes on while driving, have the SRS inspected by an authorized Hyundai Dealer.

B260E01HP-GAT

Seat Belt Warning Light

The seat belt warning light blinks for about 6 seconds when the ignition key is turned from the "OFF" position to "ON" or "START".

B260E02HP-GAT

Seat Belt Reminder Light and Chime (If installed)

The seat belt reminder light blinks for 6 seconds when the ignition key is turned from the "OFF" position to "ON" or "START". If the driver's seat belt is not fastened, the warning chime will sound at the same time.

B260F01A-AAT

High Beam Indicator Light

The high beam indicator light comes on whenever the headlights are switched to the high beam or flash position.

B260G01A-AAT

Low Oil Pressure Warning Light

CAUTION:

If the oil pressure warning light stays on while the engine is running, serious engine damage may result. The oil pressure warning light comes on whenever there is insufficient oil pressure. In normal operation, it should come on when the ignition switch is turned on, then go out when the engine is started. If the oil pressure warning light stays on while the engine is running, there may be a serious malfunction.

If this happens, stop the car as soon as it is safe to do so, turn off the engine and check the oil level. If the oil level is low, fill the engine oil to the proper level and start the engine again. If the light stays on with the engine running, turn the engine off immediately. In any instance where the oil light stays on when the engine is running, the engine should be checked by an authorized Hyundai dealer before the car is driven again.

B260N02A-AAT

Malfunction Indicator Light (If Installed)

This light illuminates when there is a malfunction of an exhaust gas related component, and the system is not functioning properly so that the exhaust gas regulation values are not satisfied. This light will also illuminate when the ignition key is turned to the "ON" position, and then it will go out in a few seconds after the engine is started. If it illuminates while driving, or does not illuminate when the ignition key is turned to the "ON" position, take your car to your nearest authorized Hyundai dealer and have the system checked.

B260M01A-AAT

Low Fuel Level Warning Light

The low fuel level warning light comes on when the fuel tank is approaching empty. When it comes on, you should add fuel as soon as possible. Driving with the fuel level warning light on or with the fuel level below "E" can cause the engine to misfire and damage the catalytic converter.

B260H01GK-AAT

Parking Brake/Low Brake Fluid Level Warning Light

WARNING:
If you suspect brake trouble, have your brakes checked by a Hyundai dealer as soon as possible. Driving your car with a problem in either the brake electrical system or brake hydraulic system is dangerous, and could result in a serious injury or death.

Warning Light Operation

The parking brake/brake fluid level warning light should come on when the parking brake is applied and the ignition switch is turned to "ON" or "START". After the engine is started, the light should go out in three seconds.
If the parking brake is not applied, the warning light should come on when the ignition switch is turned to "ON" or "START", then go out in three seconds. If the light comes on at any other

time, you should slow the vehicle and bring it to a complete stop in a safe location off the roadway.
The brake fluid level warning light indicates that the brake fluid level in the brake master cylinder is low and hydraulic brake fluid conforming to DOT 3 or DOT 4 specifications should be added. After adding fluid, if no other trouble is found, the car should be immediately and carefully driven to a Hyundai dealer for inspection. If further trouble is experienced, the vehicle should not be driven at all but taken to a dealer by a professional towing service or some other safe method.
Your Hyundai is equipped with dual-diagonal braking systems. This means you still have braking on two wheels even if one of the dual systems should fail. With only one of the dual systems working, more than normal pedal travel and greater pedal pressure are required to stop the car. Also, the car will not stop in as short a distance with only half of the brake system working. If the brakes fail while you are driving, shift to a lower gear for additional engine braking and stop the car as soon as it is safe to do so.

B260Q01E-GAT

CRUISE Indicator (If Installed)

The cruise indicator light in the instrument cluster is illuminated when the cruise control main switch on the end of the barrel is pushed.
The indicator light does not illuminate when the cruise control main switch is pushed a second time.
Information about the use of cruise control is beginning on page 1-79.

B260R01E-GAT

CRUISE SET Indicator Light (If installed)

The set indicator light in the instrument cluster is illuminated when the cruise control switch is pushed downward to "SET (COAST)".
The set indicator light does not illuminate when the control switch is in the "CANCEL" position.

B260K01F-AAT

Tail Gate Open Warning Light

This light remains on unless the tail gate is completely closed and latched.

B260L01A-GAT

Door Ajar Warning Light

The door ajar warning light warns you that a door is not completely closed.

B260P02Y-GAT

ABS Service Reminder Indicator (SRI) (If installed)

When the key is turned to the "ON" position, the Anti-Lock Brake System will come on and then go off in a few seconds. If the ABS SRI remains on, comes on while driving, or does not come on when the key is turned to the "ON" position, this indicates that there may be a problem with the ABS.
If this occurs, have your vehicle checked by your Hyundai dealer as soon as possible. The normal braking system will still be operational, but without the assistance of the anti-lock brake system.

WARNING:
If the both ABS SRI and Parking Brake/Brake fluid level warning lights remain "ON" or come on while driving, there may be a problem with E.B.D (Electronic brake force distribution).
If this occurs, avoid sudden stops and have your vehicle checked by your Hyundai dealer as soon as possible.

B270A01A-AAT

BRAKE PAD WEAR WARNING SOUND

The front disc brake pads have wear indicators that should make a high-pitched squealing or scraping noise when new pads are needed. The sound may come and go or be heard all the time when the vehicle is moving. It may also be heard when the brake pedal is pushed down firmly. Excessive rotor damage will result if the worn pads are not replaced. See your Hyundai dealer immediately.

B280A01TG-AAT

FUEL GAUGE

The needle on the gauge indicates the approximate fuel level in the fuel tank. The fuel capacity is given in Section 9.

NOTE:

The " ⛽ " symbol means the fuel filler lid is placed on the left side of the vehicle.

B290A02A-AAT

ENGINE COOLANT TEMPERATURE GAUGE

WARNING:

Never remove the radiator cap when the engine is hot. The engine coolant is under pressure and could erupt and cause severe burns. Wait until the engine is cool before removing the radiator cap.

The needle on the engine coolant temperature gauge should stay in the normal range. If it moves across the dial to "H" (Hot), pull over and stop as soon as possible and turn off the engine. Then open the hood and, after the engine has cooled, check the coolant level and the water pump drive belt. If you suspect cooling system trouble, have your cooling system checked by a Hyundai dealer as soon as possible.

B300A01A-GAT

SPEEDOMETER

Type A

OGK016262

Type B

OGK016263

Type C

OGK016264

Your Hyundai's speedometer is calibrated in kilometers per hour or miles per hour.

B330A03A-AAT

TACHOMETER

OGK016265

The tachometer registers the speed of your engine in revolutions per minute (rpm).

CAUTION:

The engine should not be raced to such a speed that the needle enters the red zone on the tachometer face. This can cause severe engine damage and may void your warranty.

B310B01GK-GAT

Odometer/Trip odometer

Function of digital odometer/trip odometer

Pushing in the reset switch on the right side of speedometer when the ignition switch is turned "ON" will display the following sequence:

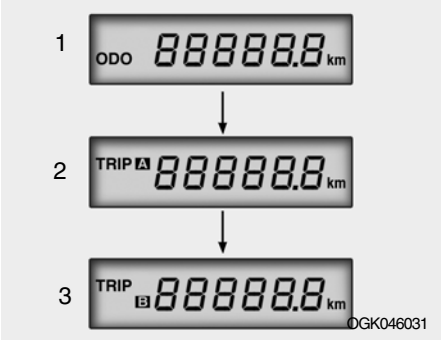

1. Odometer

The odometer records the total driving distance in kilometers or miles, and is useful for keeping a record for maintenance intervals.

NOTE:
Any alteration of the odometer may void your warranty coverage.

2,3 Trip odometer

Records the distance of 2 trips in kilometers or miles.
TRIP A: First distance you have traveled from your origination point to a first destination.
TRIP B: Second distance from the first destination to the final destination.

To shift from TRIP A to TRIP B, press the reset switch. When pressed for 1 second, it will reset to 0.

TRIP COMPUTER

B400B03GK-GAT

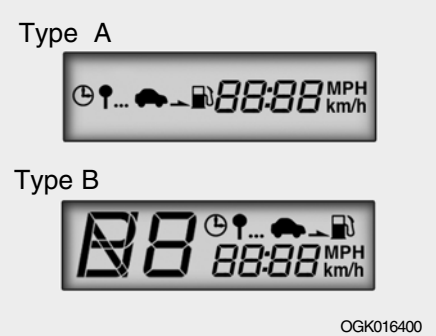

The trip computer is a microcomputer-controlled driver information gauge that displays information related to driving, such as estimated distance to empty, average speed and drive time on the LCD.

Reset Switch

- o The reset switch is used to zero the multi-functional display mode.
- o Pushing in the reset switch on the left side of tachometer changes the display as follows;

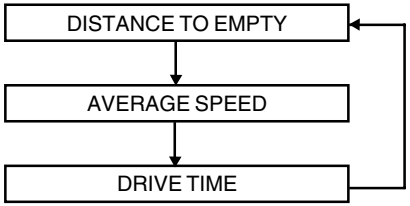

1. Distance to Empty

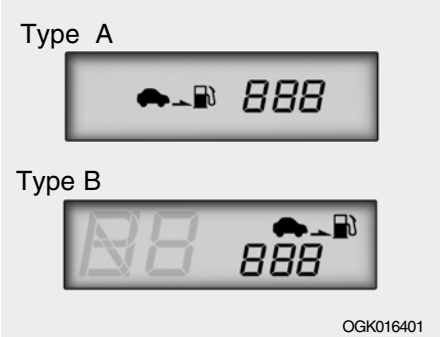

- o This mode provides the estimated distance to empty from the current fuel level in the fuel tank.
- o The trip computer may not register additional fuel if less than 6 liters (1.36 gallons) of fuel are added to the vehicle.
- o When the battery has been reinstalled after being discharged or disconnected, drive more than 32km for an accurate distance to empty.

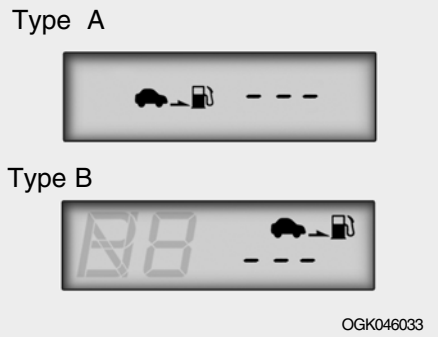

o When the distance to empty is less than 50 km (30 miles), the distance to empty digits (---) will blink until more fuel is added.

NOTE:

- **The distance to empty can differ from the actual tripmeter according to driving conditions.**
- **The distance to empty can vary according to the driving conditions, driving pattern or vehicle speed.**

2. Average Speed (km/h or MPH)

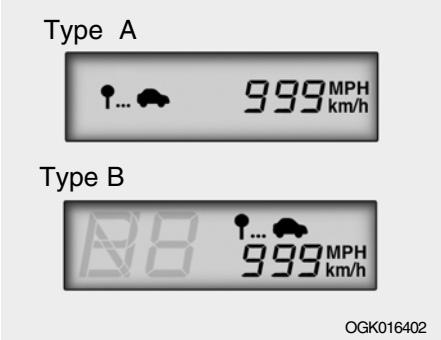

o This mode indicates the average speed travelled since the last average speed reset.

o To reset the average speed to zero, press and hold the reset switch for more than 1 second while the average speed is being displayed.

3. Drive Time

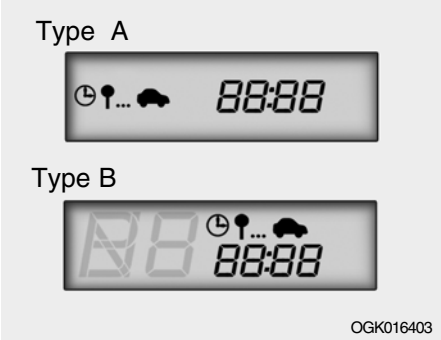

o This mode indicates the drive time travelled since the last drive time reset.

o To reset the drive time to zero, press and hold the reset switch for more than 1 second while the drive time is being displayed.

MULTI GAUGE

B330C01GK-GAT

(If installed)

Multi gauge is consists of torque gauge, instantaneous fuel consumption gauge and volt gauge.

B330C01GK

Torque gauge

It shows instantaneous change of the torque by rpm.

B330C02GK

Instantaneous fuel Consumption gauge

It shows instantaneous fuel consumption according to the driving condition. The more indicated figure is low, the more it indicates efficient driving situation.

B330C03GK

Volt gauge

It shows moment volt change and makes for diver correspond to low volt situation.

MULTI-FUNCITION LIGHT SWITCH

B340A01A-AAT

Combination Turn Signal, Headlight and High-beam Switch

Turn Signal Operation

Pulling down on the lever causes the turn signals on the left side of the car to blink. Pushing upwards on the lever causes the turn signals on the right side of the car to blink. As the turn is completed, the lever will automatically return to the center position and turn off the turn signals at the same time. If either turn signal indicator light blinks more rapidly than usual, goes on but does not blink, or does not go on at all, there is a malfunction in the system. Check for a burned-out fuse or bulb or see your Hyundai dealer.

B340B01A-AAT

Lane Change Signal

To indicate a lane change, move the lever up or down to a point where it begins flashing.
The lever will automatically return to the center position when released.

B340C03E-AAT

Headlight Switch

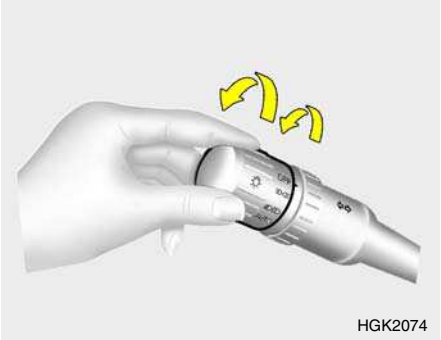

To operate the headlights, turn the barrel on the end of the multi-function switch. The first position turns on the parking lights, sidelights, tail lights and instrument panel lights. The second position turns on the headlights.

NOTE:
The ignition must be in the "ON" position to turn on the headlights.

Parking light auto cut (If installed)

o The purpose of this feature is to prevent the battery from being discharged.

The system automatically turns off the small light when the driver removes the ignition key and opens the driver- side door.

o With this feature, the parklight will be turned off automatically if the driver parks on the side of road at night.

If necessary, to keep the lights on when the ignition key is removed, perform the following :

1) Open the driver-side door.
2) Turn the parklights OFF and ON again using the light switch on the steering column.

B340F01A-GAT

Daytime Running Lights (If Installed)

Your Hyundai is equipped with daytime running lights. The daytime running lights are used to improve visibility for oncoming traffic. Your vehicle daytime running lights are designed to remain on continuously when the engine is operating even though the headlight switch is in the "OFF" position. However, the daytime running lights will be off while the parking brake is applied.

B340D01A-AAT

High-beam Switch

To turn on the headlight high beams, push the lever forward (away from you). The high beam indicator light will come on at the same time. For low beams, pull the lever back toward you.

B340G01LZ-GAT

Auto Light (If installed)

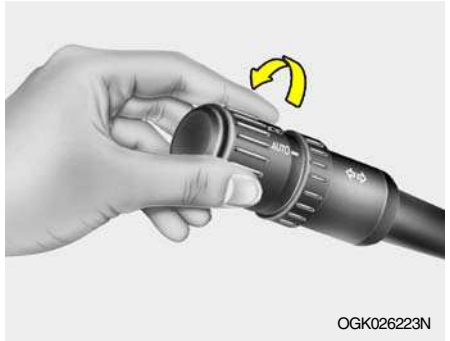

To operate the automatic light feature, turn the barrel on the end of the multi-function switch. If you set the multi-function switch to "AUTO", the tail lights and headlights will be turned automatically on or off according to external illumination.

NOTE:

Switch on car light manually in foggy, cloudy and rainy conditions.

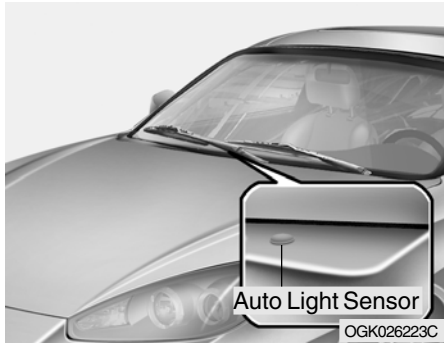

NOTE:

- **Never place anything over sensor located on the instrument panel, this will ensure better auto light system control.**
- **Don't clean the sensor using a window cleaner.**
- **If your vehicle has window tint or other types of coating on the front windshield, the AUTO light system may not work properly.**

B340E01A-AAT

Headlight Flasher

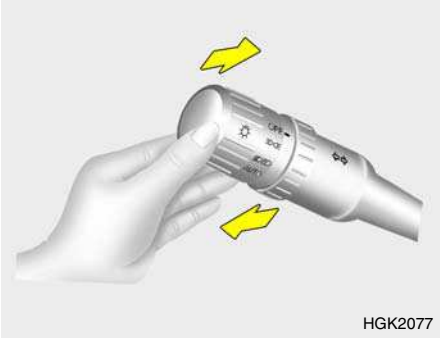

To flash the headlights, pull the switch lever toward you, then release it. The headlights can be flashed even though the headlight switch is in the "OFF" position.

WINDSHIELD WIPER AND WASHER SWITCH

B350A01A-AAT

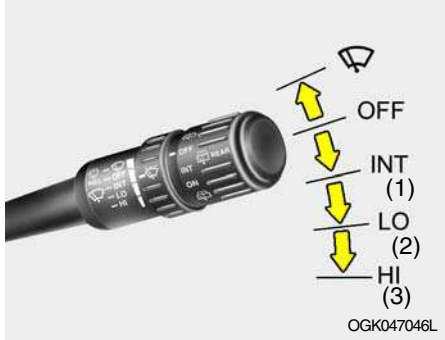

The windshield wiper switch has three positions:

(1) Intermittent wiper operation
(2) Low-speed operation
(3) High-speed operation

NOTE:
To prevent damage to the wiper system, do not attempt to wipe away heavy accumulations of snow or ice. Accumulated snow and ice should be removed manually.

If there is only a light layer of snow or ice, operate the heater in the defrost mode to melt the snow or ice before using the wiper.

B350B01O-AAT

Windshield Washer Operation

To use the windshield washer, pull the wiper/washer lever toward the steering wheel. When the washer lever is operated, the wipers automatically make two passes across the windshield. The washer continues to operate until the lever is released.

NOTE:

- **Do not operate the washer more than 15 seconds at a time or when the fluid reservoir is empty.**
- **In icy or freezing weather, be sure the wiper blades are not frozen to the glass prior to operating the wipers.**
- **In areas where water freezes in winter, use windshield washer antifreeze.**

Mist Wiper Operation

OGK047049

If a single wipe is desired in mist, push the windshield wiper and washer control lever upwards.

B350C01S-AAT

Adjustable Intermittent Wiper Operation

OGK047050

To use the intermittent wiper feature, place the wiper switch in the "INT" position. With the switch in this position, the interval between wipes can be varied from 2 to 10 seconds by turning the interval adjuster barrel.

B390A01E-AAT

Rear Window Wiper And Washer

OGK047051

1. : The rear window wiper starts to operate three times after the washer fluid sprays onto the rear window.
2. OFF
3. INT: The interval between wipes operates every 5 seconds intermittently.
4. ON : The rear window wiper starts to operate continuously.
5. : The washer fluid will be sprayed onto the rear window and the wiper operates while the rear window wiper barrel is placed in this position.

Do not operate the washer continuously for more than 15 seconds or when the fluid reservoir is empty; this could damage the system. Do not operate the wiper when the window is dry; this can result in scratching as well as premature wiper blade wear.
For the reason stated above,do not operate the washer when the washer fluid reservoir is empty.

FOG LIGHT SWITCH

B360B01A-AAT

Front Fog Light Switch (If installed)

To turn on the front fog lights, push the switch. They will light when the headlight switch is in the second position and the ignition key is in the "ON" position.

B360A01Y-GAT

Rear Fog Light Switch (If installed)

To turn on the rear fog lights, push the switch. They will come on when the headlight switch is in the second position and the key is in the "ON" position.

HAZARD WARNING SYSTEM

B370A01A-AAT

The hazard warning system should be used whenever you find it necessary to stop the car in a hazardous situation. When you must make such an emergency stop, always pull off the road as far as possible.
The hazard warning lights are turned on by pushing in the hazard switch. This causes all turn signal lights to blink. The hazard warning lights will operate even though the key is not in the ignition.
To turn the hazard warning lights off, push the switch a second time.

REAR WINDOW DEFROSTER SWITCH

B380A02A-AAT

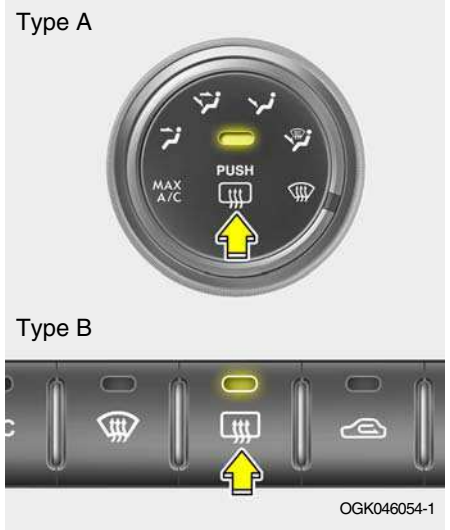

The rear window defroster and heated outside rearview mirrors are turned on by pushing in the switch. To turn the defroster off, push the switch a second time. The rear window defroster automatically turns itself off after about 20 minutes. To restart the defroster cycle, push in the switch again after it has turned itself off.

CAUTION:
Do not clean the inner side of the rear window glass with an abrasive type of glass cleaner or use a scraper to remove foreign deposits from the inner surface of the glass as this may cause damage to the defroster elements.

NOTE:
The engine must be running for the rear window defroster to operate.

DIGITAL CLOCK

B400A01GK-GAT

There are three control buttons for the digital clock. Their functions are:

H - Push "H" to advance the hour indicated.

M - Push "M" to advance the minute indicated.

R - Push "R" to reset minutes to ":00" to facilitate resetting the clock to the correct time. When this is done:
Pressing "R" between 11 : 01 and 11 : 29 changes the readout to 11 : 00.
Pressing "R" between 11 : 30 and 11 : 59 changes the readout to 12 : 00.
Push the "R" button for 3 seconds to display a 12 or 24-hour clock.

INSTRUMENT PANEL LIGHT CONTROL (RHEOSTAT)

B410A01A-AAT

(If Installed)

The instrument panel lights can be made brighter or dimmer by turning the instrument panel light control knob.

CIGARETTE LIGHTER

B420A02A-AAT

For the cigarette lighter to work, the key must be in the "ACC" position or the "ON" position.
To use the cigarette lighter, push it all the way into its socket. When the element has heated, the lighter will pop out to the "ready" position.
Do not hold the cigarette lighter pressed in. This can damage the heating element and create a fire hazard.
If it is necessary to replace the cigarette lighter, use only a genuine Hyundai replacement or its approved equivalent.

CAUTION:
Do not use electric accessories or equipment other than the Hyundai genuine parts in the socket.

ASHTRAY

B430A01GK-AAT

The front ashtray may be opened by pushing and releasing the ashtray door at its top edge.
To remove the ashtray in order to clean it, the metal ash receptacle should be lifted out from the ashtray door. Do not attempt to remove the entire ashtray door assembly or damage will result. To reinstall it, place it in the proper position and press it down in the ashtray door. The ashtray lamp will only illuminate when the exterior body lights are switched on.

DRINK HOLDER

B450A02GK-GAT

(If Installed)

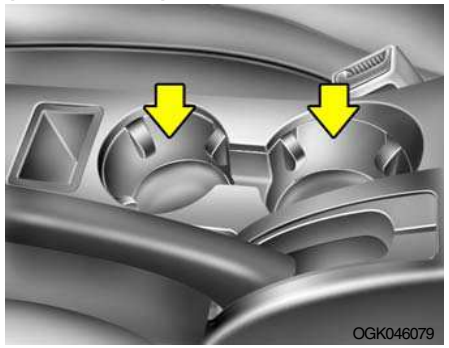

The drink holder is used for holding cups or cans.
To use the passenger's drink holder, push the drink holder.

WARNING:

- **Use caution when using the drink holders. A spilled beverage that is very hot can injure you or your passengers. Spilled liquids can damage interior trim and electrical components.**
- **Do not place objects other than cups or cans in the drink holder. Such objects can be thrown out in the event of a sudden stop or an accident, possibly injuring the passengers in the vehicle.**

HEADLIGHT LEVELING DEVICE SYSTEM

B340G01A-GAT

(If Installed)

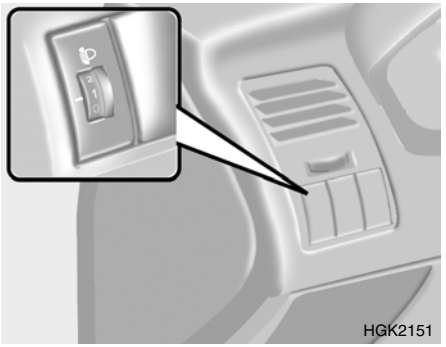

To adjust the headlight beam level according to the number of the passengers and the loading weight in the luggage area, turn the beam leveling switch.

The higher the number of the switch position, the lower the headlight beam level. Always keep the headlight beam at the proper leveling position, or headlights may dazzle other road users.

Listed below are the examples of proper switch settings. For loading conditions other than those listed below, adjust the switch position so that the beam level may be the nearest as the condition obtained according to the list.

Loading condition	Switch position
Driver only	0
Driver + front passenger	0
Full passengers (including driver)	1
Full passengers (including driver) + full trunk loading (or light trailer loading)	2
Driver + full trunk loading (or maximum trailer loading)	3

SUNSHADE

B470A01GK-AAT

(If Installed)

The sunshade can be opened and closed by sliding it forward or rearward when the sunroof is closed. The sunshade will open automatically when the sunroof is opened, but it must be closed manually.

WARNING:
Never adjust the sunshade while driving. This could result in loss of control and an accident that may cause death, serious injury, or property damage.

SUNROOF

B460A01S-AAT

(If Installed)

The sunroof can be operated with the ignition key in the "ON" position.

B460B03GK-GAT

Opening the Sunroof System

The sunroof can be electrically opened or closed with the ignition key in the "ON" position. The sunroof is moved to its fully open position by pushing the "⇧" button, and to stop at the desired position, push in any buttons (⇧, ⬇, Up, Down). To close, press and hold the "⬇" button.

Release the button when the sunroof reaches the desired position.

WARNING:
Be careful that someone's head, hands and body are not trapped by a closing sunroof.

B460C01GK-AAT

Tilting the Sunroof System

To use the auto tilt feature, press the UP button on the overhead console. The sunroof will tilt all the way open. To stop the sunroof tilting at any point, press any sunroof control button.

To close the sunroof, press the DOWN button on the overhead console and hold it until the sunroof is closed.

NOTE:

After washing the car or after there is rain, be sure to wipe off any water that is on the sunroof before operating it.

WARNING:

- **Do not close a sunroof if anyone's hands, arms or body are between the sliding glass and the sunroof sash, as this could result in injury.**
- **Do not place your head or arms out of the sunroof opening at any time.**
- **While the vehicle is moving, always keep the head, hands and other parts of the body of all occupants away from the roof opening. Otherwise, you could be seriously injured if the vehicle stops suddenly or if the vehicle is involved in an accident.**

CAUTION:

- **Do not open the sunroof in severely cold temperature or when it is covered with ice or snow.**
- **Periodically remove any dirt that may have accumulated on the guide rails.**
- **Do not press any sunroof control button longer than necessary. Damage to the motor or system components could occur.**

B460D03GK-AAT

Manual Operation of Sunroof

If the sunroof does not electrically operate:

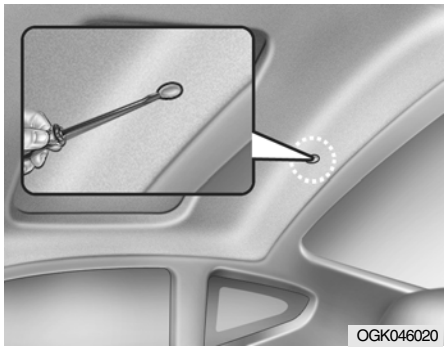

1. Remove the cap located in the rear roof panel by using a coin or screw driver.

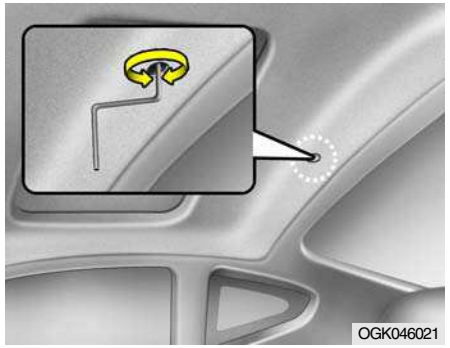

2. Insert the hexagonal head wrench provided with the vehicle into the socket. This wrench can be found in the vehicle's trunk or glove box.
3. Push and turn the wrench clockwise to close or counterclockwise to open the sunroof.

B460E03GK-GAT

Resetting the Sunroof System

If the battery has been recharged, disconnected or if the sunroof is operated with the hexagonal head wrench manually, you may need to reset the sunroof.

To do this;

1. Turn the ignition switch "OFF".
2. With pressing "⇧" "up" button at the same time, turn the ignition switch "ON".

   The resetting is failed when the ignition key to the "OFF" within 1.5 seconds.

3. If the sunroof is set like this, the sunroof is reset with tilting up/down automatically once for all.

CAUTION:
If the sunroof is not reset, it may not be operated properly.

MAP LIGHT

B480A02GK-GAT

(1) Push in the map light switch to turn on the driver side light.
(2) In the "DOOR" position, the interior courtesy light comes on when any door is opened regardless of the ignition key position. The light goes out gradually 6 seconds after the door is closed.
(3) Push in the map light switch to turn on the front passenger side light.

SPECTACLE CASE

B491A03O-GAT

(If Installed)

The spectacle case is located on the front overhead console.
Push the end of the cover to open the spectacle case.

WARNING:

- **Do not keep objects such as sharp or unsuitable things inside the spectacle case. Such objects can be thrown out in the event of a sudden stop or an accident, possibly injuring the passengers in the vehicle.**
- **Do not open the spectacle case while the vehicle is moving. The rear view mirror of the vehicle can be blocked by an open spectacle case.**

GLOVE BOX

B500A01A-AAT

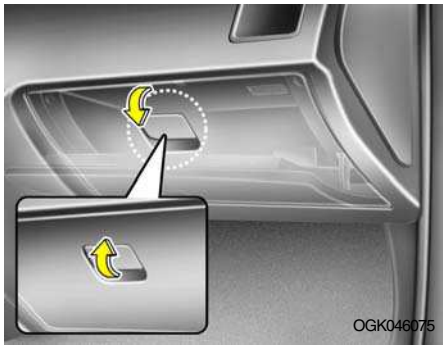

WARNING:
To avoid the possibility of injury in case of an accident or sudden stop, the glove box door should be kept closed when the car is in motion.

To open the glove box, pull on the glove box release lever.

B500B01NF-GAT

Illuminated Glove Box

Opening the glove box will automatically turn on the light when the multi-function switch is turned to the first position.

OUTSIDE REARVIEW MIRROR

B510B01Y-AAT

Electric Type

The outside rearview mirrors can be adjusted to your preferred rear vision, both directly behind the vehicle, and to the rear of the left and right sides.
The remote control outside rearview mirror switch controls the adjustments for both the right and left outside mirror.

To Adjust the Position of Either Mirror:

1. Move the selecting switch to the right or left to activate the adjustable mechanism for the corresponding door mirror.
2. Now, adjust the mirror angle by depressing the appropriate perimeter switch as illustrated.

CAUTION:
- **Do not operate the switch continuously for an unnecessary length of time.**
- **Scraping ice from the mirror face could cause permanent damage. To remove any ice, use a sponge, soft cloth or approved de-icer.**

WARNING:
Be careful when judging the size or distance of any object seen in the passenger side rearview mirror. It is a convex mirror with a curved surface. Any objects seen in this mirror are closer than they appear.

B510D01HP-GAT

Outside Rearview Mirror Heater (If Installed)

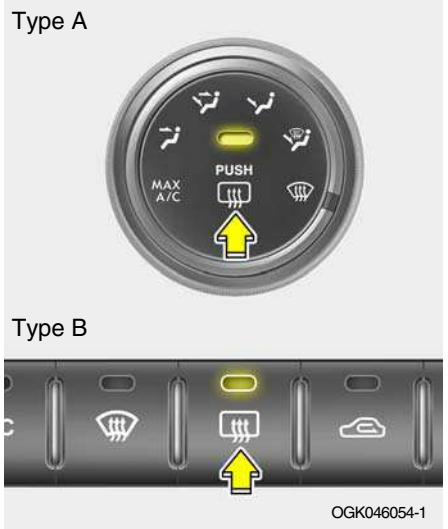

The outside rearview mirror heater is actuated in connection with the rear window defroster. To heat the outside rearview mirror glass, push in the switch for the rear window defroster. The rearview mirror glass will be heated for defrosting or defogging and will give you improved rear vision in inclement weather conditions.

Push the switch again to turn the heater off. The outside rearview mirror heater automatically turns itself off after 20 minutes.

B510C01A-AAT

Folding the Outside Rearview Mirrors

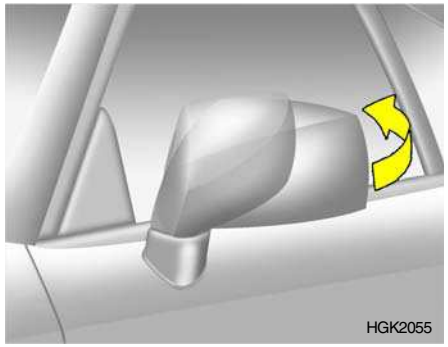

To fold the outside rearview mirrors, push them towards the rear.
The outside rearview mirrors can be folded rearward for parking in narrow areas.

WARNING:
Do not adjust or fold the outside rearview mirrors while the vehicle is moving.
This could result in loss of control, and an accident which could cause death, serious injury or property damage.

DAY/NIGHT INSIDE REARVIEW MIRROR

B520A01A-AAT

Manual Type

Your Hyundai is equipped with a day/night inside rearview mirror. The "night" position is selected by flipping the tab at the bottom of the mirror toward you. In the "night" position, the glare of headlights of cars behind you is reduced.

B520B02O-GAT

Electric type (If installed)

The electric type day/night inside rearview mirror automatically controls the glare of headlights of the car behind you.

1. Pressing the ⏻ button turns the auto-dimming function OFF which is indicated by the green Status Indicator LED turning off.
2. Pressing the ⏻ button again turns the auto-dimming function ON which is indicated by the green Status Indicator LED turning on.

NOTE:

The mirror defaults to the "ON" position each time the vehicle is started.

PARKING BRAKE

B530A03A-AAT

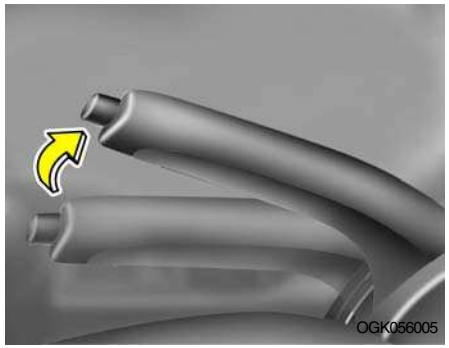

Always engage the parking brake before leaving the car. This also turns on the parking brake indicator light when the key is in the "ON" or "START" position. Before driving away, be sure that the parking brake is fully released and the indicator light is off.

Applying the parking brake

To engage the parking brake, first apply the foot brake and then without pressing the release button in, pull the parking brake lever up as far as possible. In addition it is recommended that when parking the vehicle on a gradient, the shift lever should be positioned in the appropriate low gear on manual transaxle vehicles or in the P (Park) position on automatic transaxle vehicles.

CAUTION:
Driving with the parking brake applied will cause excessive brake pad (or lining) and brake rotor wear.

Releasing the parking brake

To release the parking brake, first apply the foot brake and pull up the parking brake lever slightly. Secondly, depress the release button and lower the parking brake lever while holding the button.

WARNING:
Whenever leaving vehicle or parking always set the parking brake as far as possible and fully engage the vehicle's transaxle into the park position. Vehicles not fully engaged in park with the parking brake set are at risk for moving inadvertently and injuring yourself or others.

HIGH-MOUNTED REAR STOP LIGHT

B550A01S-GAT

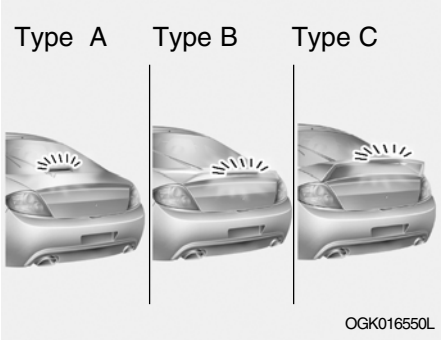

In addition to the lower-mounted rear stoplights on either side of the car, the high mounted rear stoplight in the center of the rear window or inserted in the rear spoiler also lights when the brakes are applied.

FRONT DOOR EDGE WARNING LIGHT

B620A01S-AAT

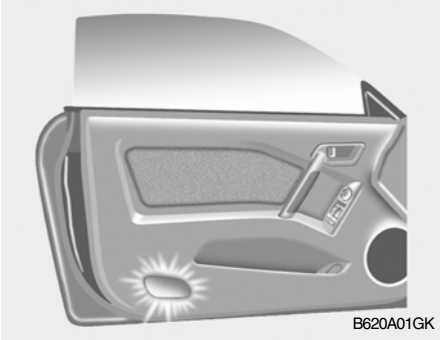

A red light comes on when the front door is opened. The purpose of this light is to assist when you get in or out and also to warn passing vehicles.

HOOD RELEASE

B570A01GK-GAT

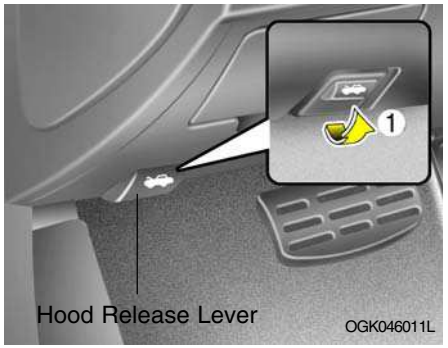

1. Pull the release knob to unlatch the hood.

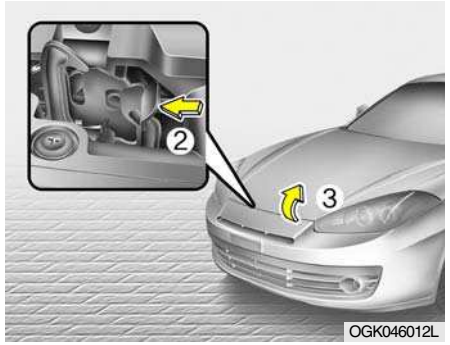

2. Press the secondary latch lever up and lift the hood.
3. Raise the hood by hand.

When closing the hood, slowly close the hood and make sure it locks into place.

WARNING:

- **Always double check to be sure that the hood is firmly latched before driving away. If it is not latched, the hood could open while the vehicle is being driven, causing a total loss of visibility, which might result in an accident.**
- **Do not move the vehicle with the hood in the raised position, as vision is obstructed and the hood could fall or be damaged.**

REMOTE FUEL-FILLER LID RELEASE

B560A01MC-GAT

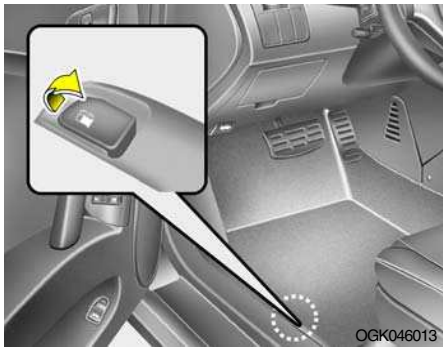

The fuel-filler lid may be opened from inside the vehicle by pulling up on the fuel-filler lid opener located on the front floor area on the left side of the car.

NOTE:

If the fuel-filler lid will not open because ice has formed around it, tap lightly or push on the lid to break the ice and release the lid. Do not pry on the lid. If necessary, spray around the lid with an approved de-icer fluid (do not use radiator anti-freeze) or move the vehicle to a warm place and allow the ice to melt.

WARNING:

- **Fuel vapors are dangerous. Before refueling, always stop the engine and never allow sparks or open flames near the filler area. If you need to replace the filler cap, use a genuine Hyundai replacement part.**
  If you open the fuel filler cap during high ambient temperatures, a slight "pressure sound" may be heard. This is normal and not a cause for concern.
  Whenever you open the fuel filler cap, turn it slowly.

- **Automotive fuels are flammable/explosive materials. When refueling, please note the following guidelines carefully. Failure to follow these guidelines may result in severe personal injury, severe burns or death by fire or explosion.**
  - **Before refueling always note the location of the Emergency Gasoline Shut-Off, if available, at the gas station facility.**
  - **Before touching the fuel nozzle or fuel filler cap, you should eliminate potentially dangerous static electricity discharge by touching another metal part of the front of the vehicle, a safe distance away from the fuel filler neck, nozzle, or other gas source.**
  - **Do not get back into a vehicle once you have begun refueling. Do not touch, rub or slide against any item or fabric (polyester, satin, nylon, etc.) capable of producing static electricity. Static electricity discharge can ignite fuel vapors resulting in explosion.**

If you must re-enter the vehicle, you should once again eliminate potentially dangerous static electricity discharge by touching a metal part of the vehicle, away from the fuel filler neck, nozzle or other gasoline source.

- **When using a portable fuel container be sure to place the container on the ground prior to refueling. Static electricity discharge from the container can ignite fuel vapors causing a fire. Once refueling has begun, contact with the vehicle should be maintained until the filling is complete. Use only portable fuel containers designed to carry and store gasoline.**
- **Do not use cellular phones around a gas station or while refueling any vehicle. Electric current and/or electronic interference from cellular phones can potentially ignite fuel vapors causing a fire. If you must use your cellular phone use it in a place away from the gas station.**
- **When refueling always shut the engine off. Sparks produced by electrical components related to the engine can ignite fuel vapors causing a fire. Always ensure that the engine is OFF before and during refueling. Once refueling is complete, check to make sure the fuel filler cap and door are securely closed, before starting the engine.**
- **Do not light any fire around a gas station. DO NOT use matches or a lighter and DO NOT SMOKE or leave a lit cigarette in your vehicle while at a gas station especially during refueling. Automotive fuel is highly flammable and can, when ignited, result in explosion by flames.**
- **If a fire breaks out during refueling, leave the vicinity of the vehicle, and immediately contact the manager of the gas station or contact the police and local fire department. Follow any safety instructions they provide.**

B540A01F-AAT

Remote Tail Gate Release

To open the tail gate without using the key, pull up the lid release lever located on the driver's door panel.
To close, lower the tail gate, then press down on it until it locks. To be sure the tail gate is securely fastened, always try to pull it up again.

WARNING:
The tail gate should always be kept completely closed while the vehicle is in motion. If it is left open or ajar, poisonous exhaust gases may enter the car resulting in serious illness or death to the occupants. See additional warnings concerning exhaust gases on page 2-2.

B540C01F-AAT
To Unlock Using the Key

OGK046006

To open the tail gate, insert the key and turn it clockwise to unlock. The tail gate compartment light illuminates when the tail gate is opened.

B540D01GK-GAT
When you close the tail gate

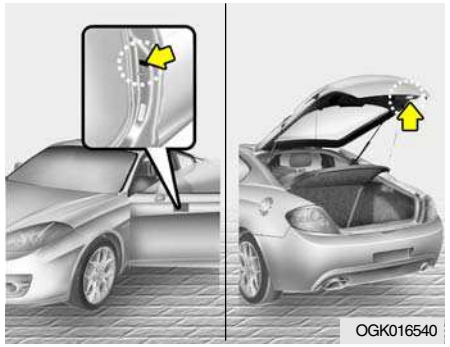
OGK016540

HGK227

WARNING:
Do not close an open tail gate (rear hatch) while a person(s) is sitting upright on the rear seat. The tail gate or tail gate glass may contact the head of a person sitting upright on the rear seat. Closing the tail gate onto a person's head may cause serious injuries, including death.

SUN VISOR

B580A01GK-GAT

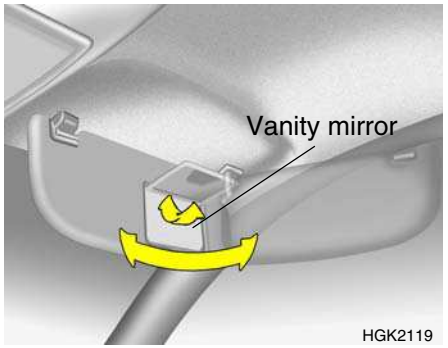

Your Hyundai is equipped with sun visors to give the driver and front passenger either frontal or sideward shade. To reduce glare or to shut out direct rays of the sun, turn the sun visor down. A ticket holder is provided on the back of the sun visor for the driver. Vanity mirrors are provided on the back of the sunvisor for the driver and the front passenger (If Installed).

NOTE:
The Supplemental Restraint System (SRS) label containing useful information can be found on the front of each sun visor.

WARNING:
Do not place the sun visor in such a manner that it obscures visibility of the roadway, traffic or other objects.

B580C01JM-AAT

Sun Visor Extender (If Installed)

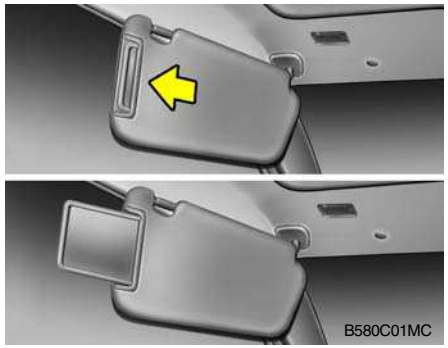

Your vehicle is equipped with sun visor extenders that may be used when the visor is in the side glass position.

STEERING WHEEL TILT LEVER

B600A01HP-AAT

(If installed)

To adjust the steering wheel:

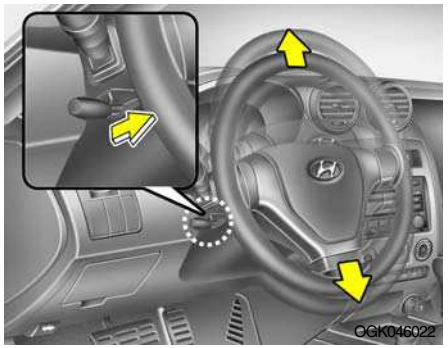

1. Pull the lever toward you and hold it to unlock.
2. Raise or lower the steering wheel to the desired position.
3. After adjustment, release the lever.

WARNING:
Do not attempt to adjust the steering wheel while driving as this may result in loss of control of the vehicle and serious injury or death.

HORN

B610A01S-GAT

Press the pad on the steering wheel to sound the horn.

LUGGAGE NET

B540D02HP-GAT

(If Installed)

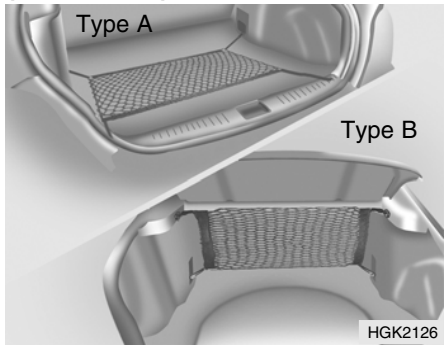

Some objects can be kept in the net of the luggage compartment.
Use the luggage net on the floor or at the back of the luggage compartment to prevent objects from sliding.

CRUISE CONTROL

CAUTION:
To prevent damage to the goods or the vehicle, care should be taken when carrying fragile or bulky objects in the luggage compartment.

WARNING:
Avoid eye injury. DO NOT overstretch. ALWAYS keep face and body out of recoil path. DO NOT use when strap has visible signs of wear or damage.

B660A02S-GAT

(If Installed)

OGK016660

The cruise control system provides automatic speed control for your comfort when driving on freeways, tollroads, or other noncongested highways. This is designed to function above approximately 40 km/h (25 mph).

WARNING:
Pay particular attention during the down-hill driving with cruise control system as the vehicle speed can be increased gradually.

B660B01GK-GAT

To Set the Cruise Speed

OGK016661

1. Push in the cruise control main switch on the end of the barrel. The "CRUISE" indicator light in the instrument cluster will be illuminated. This turns the system on.
2. Accelerate to the desired cruising speed above 40 km/h (25 mph).
3. Push the control switch downward to "SET (COAST)" and release it. The "SET" indicator light in the instrument cluster will illuminate.
4. Remove your foot from the accelerator pedal and the desired speed will automatically be maintained.

5. To increase speed, depress the accelerator pedal enough for the vehicle to exceed the preset speed. When you remove your foot from the accelerator pedal, the vehicle will return to the speed you have set.

WARNING:
To avoid accidental cruise control engagement, keep the cruise control main switch off when not using the cruise control.

B660C01GK-GAT

To Cancel the Cruise Speed

OGK016662

To disengage the cruise control system, pull the control switch toward the steering wheel to "CANCEL" position. Additionally, the following actions will disengage the system :

- o Depress the brake pedal.
- o Depress the clutch pedal (Manual transaxle).
- o Shift the selector lever to "N" position (Automatic transaxle).
- o Decrease the vehicle speed lower than the memorized speed by 15 km/h (9 mph).
- o Decrease the vehicle speed to less than 40 km/h (25 mph).
- o Release the main switch.

B660D01E-GAT

To Resume the Preset Speed

OGK016663

The vehicle will automatically resume the speed set prior to cancellation when you push the control switch upward to "RESUME (ACCEL)" position and release it, providing the vehicle speed is above 40 km/h (25 mph).

B660E01E-AAT

To Reset at a Faster Speed

1. Push the control switch upward to "RESUME (ACCEL)" position and hold it.
2. Accelerate to desired speed and release the control switch. While the control switch is held, the vehicle will gradually gain speed.

B660F01GK-AAT

To Reset at a Slower Speed

OGK016661

1. Push the control switch downward to "SET (COAST)" and hold it. The "SET" indicator light in the instrument cluster will illuminate. The vehicle will decelerate.
2. When the desired speed is obtained, release the control switch. The "SET" indicator light in the instrument cluster will turn off. While the control switch is pushed, the vehicle speed will gradually decrease.

WARNING:

- **Keep the main switch off when not using the cruise control.**
- **Use the cruise control system only when traveling on open highways in good weather.**
- **Do not use the cruise control when it may not be safe to keep the car at a constant speed, for instance, driving in heavy or varying traffic, or on slippery (rainy, icy or snow-covered) or winding roads or over 6% up-hill or down-hill roads.**
- **Pay particular attention to the driving conditions whenever using the cruise control system.**
- **During cruise-control driving with a manual transaxle vehicle, do not shift into neutral without depressing the clutch pedal, or the engine will be overrevved. If this happens, depress the clutch pedal or release the main switch.**

o With the cruise control engaged, when the brake pedal is applied, it is normal to hear the cruise control system deactivate. This is an indication of normal system operation.
o During normal cruise control operation, when the "SET(COAST)" is activated or reactivated after applying the brakes, the cruise control will energize after approximately 3 seconds. This delay is normal.

AUDIO REMOTE CONTROL SWITCH

B610A01GK-GAT

(If installed)

The steering wheel audio remote control switch is installed to promote safe driving.

POWER ON/OFF Switch

Press the POWER ON/OFF switch to select Radio, Tape, CD (compact disc) and CDC (compact disc changer).

Press the POWER ON/OFF switch once again to cancel Radio, Tape, CD (compact disc) and CDC (compact disc changer).

SEEK UP (▼) Switch

Press the SEEK UP (▼) switch 1 sec. or more.

1. RADIO mode

When the SEEK UP (▼) switch is pressed, the unit will automatically tune to the next higher frequency.

2. TAPE mode

Pressing the SEEK UP (▼) switch will play the beginning of the next music segment.

3. CD (compact disc)/CDC (compact disc changer) mode

Press the SEEK UP (▼) switch once to skip forward to the beginning of the next track.

VOL (▲/▼) Switch

o Press the VOL (▲) button to increase volume.
o Press the VOL (▼) button to decease volume.

B710A02GK-GAT

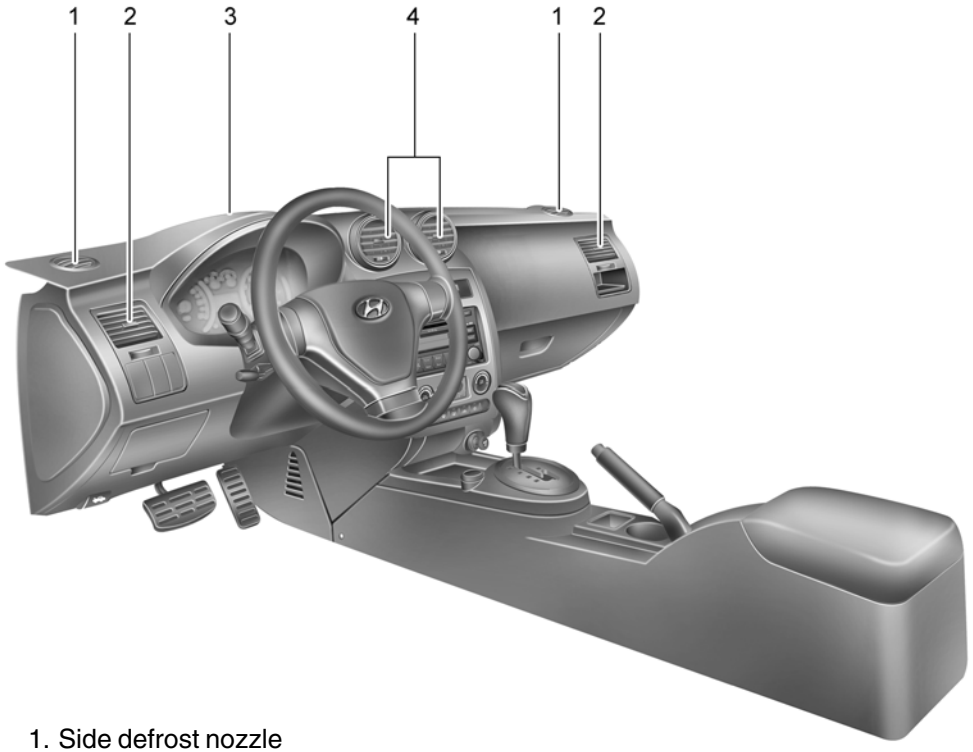

1. Side defrost nozzle
2. Side Ventilator
3. Windshield Defrost ventilator
4. Center Ventilator

OGK016003

B710B02O-AAT

Center Ventilator

The center ventilators are located in the middle of the dashboard. To change the direction of the air flow, move the knob in the center of the vent up-and-down and side-to-side. The vents are opened when the vent knob is moved to "≋ " position. The vents are closed when the vent knob is moved to "⊠". Keep these vents clear of any obstructions.

B710C02HP-AAT

Side Ventilator

The side ventilators are located on each side of the dash board. To change the direction of the air flow, move the knob in the center of the vent up-and-down and side-to-side. The vents are opened when the vent knob is moved to " ≋ " position. The vents are closed when the vent knob is moved to "⊠". Keep these vents clear of any obstructions.

B670A02GK-GAT

Rotary Type

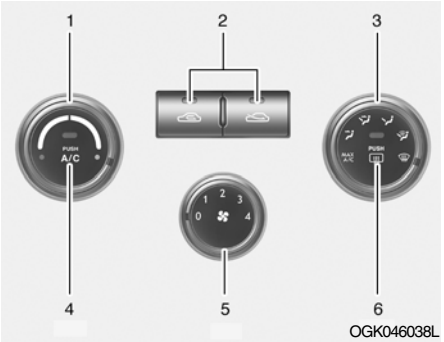

1. Temperature control switch
2. Air intake control switch
3. Air flow control switch
4. Air Conditioning switch
5. Fan speed control switch
6. Rear window defroster switch

B670B01A-AAT

Fan Speed Control (Blower Control)

This is used to turn the blower fan on or off and to select the fan speed.
This blower fan speed, and therefore the volume of air delivered from the system, may be controlled manually by setting the blower control between the "1" and "4" positions.

B670E02A-AAT

Temperature Control

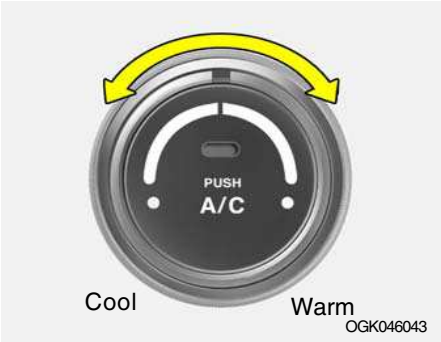

This control is used to adjust the degree of heating or cooling desired.

B670C02Y-AAT

Air Intake Control

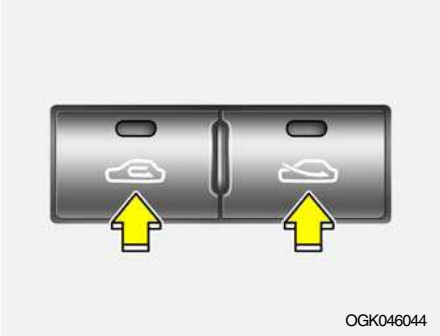

This is used to select fresh outside air or recirculation of inside air.

Fresh
Recirculation

With the " " mode selected, air enters the vehicle from outside and is heated or cooled according to the other functions selected.
With the " " mode selected, air from within the passenger compartment is drawn through the heating system and heated or cooled according to the other functions selected.

NOTE:
It should be noted that prolonged operation of the heating system in " " mode will give rise to fogging of the windshield and side windows and the air within the passenger compartment will become stale. In addition prolonged use of the air conditioning with the " " mode selected may result in the air within the passenger compartment becoming excessively dry.

B670D01MC-AAT

Air Flow Control

This is used to direct the flow of air. Air can be directed to the floor, instrument panel outlets, or windshield. Five symbols are used to represent Face, Bi-Level, Floor, Floor-Defrost and Defrost air position.
The MAX A/C mode is used to cool the inside of the vehicle faster (If installed).

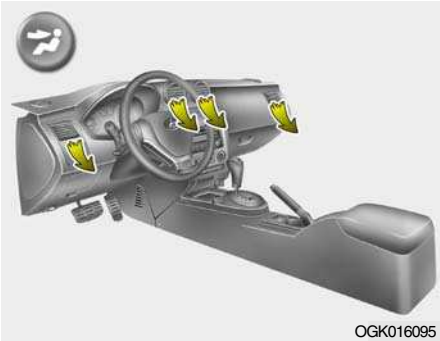

Face-Level

Selecting the "Face" mode will cause air to be discharged through the face level vents.

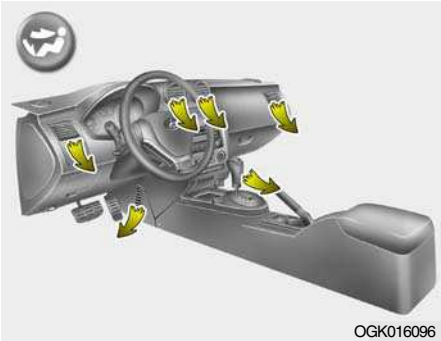

Bi-Level

Air is discharged through the face vents and the floor vents. This makes it possible to have cooler air from the dashboard vents and warmer air from the floor outlets at the same time.

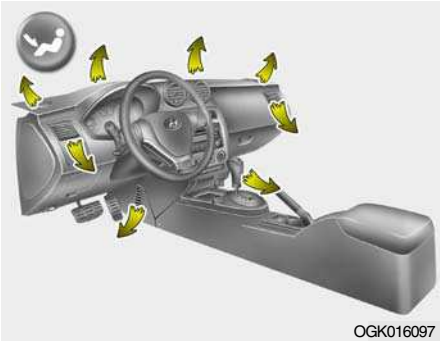

Floor-Level

Air is discharged through the floor vents, windshield defroster nozzle, side defroster nozzle, side ventilator.

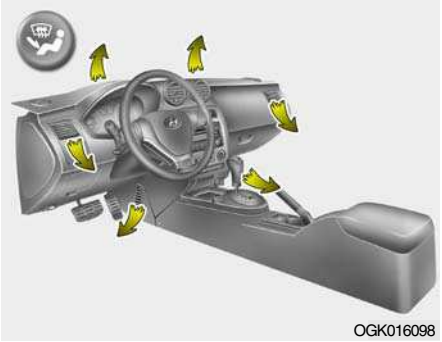

Floor-Defrost Level

Air is discharged through the windshield defroster nozzle, the floor vents, side defroster nozzle, side ventilator.
If the "Floor-Defrost" mode is selected, the A/C will turn on automatically and "Fresh" mode will be activated.

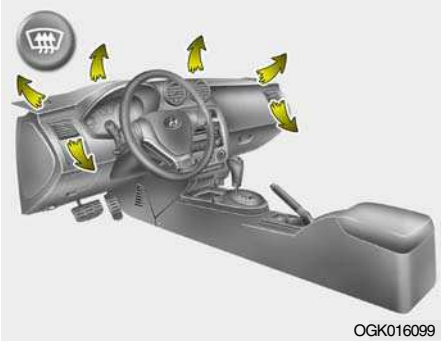

Defrost-Level

Air is discharged through the windshield defroster nozzle, side defroster nozzle, side ventilator.
If the "Defrost" mode is selected, the A/C will turn on automatically and "Fresh" mode will be activated.

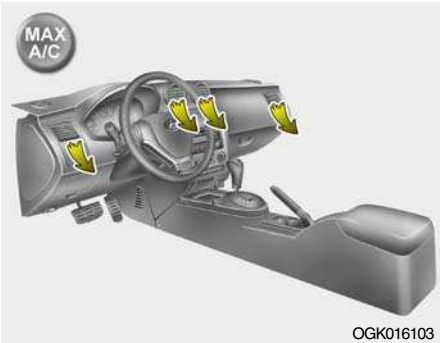

MAX A/C-Level (If Installed)

Air is discharged through the face level vents.
If the "MAX A/C" mode is selected, the A/C will turn on automatically and "Recirculation" mode will be activated.

NOTE:

- **The air intake control switch will change to "" mode when the ignition switch is turned "ON" with the MAX A/C mode selected.**
- **When you change to another mode from MAX A/C, the A/C and the air intake control switch are set as shown in the following chart.**

	A/C	Air Intake Control Switch
	ON	or *
	ON or OFF *	
	ON or OFF *	
	ON	
	ON	

* The A/C or the air intake control switch returns to its former setting.

HEATING CONTROLS

B690A02S-AAT

OGK046038

For normal heating operation, set the air intake control to the fresh air ( ) position and the air flow control to the floor ( ) position.

For faster heating, the air intake control switch should be set in the recirculate ( ) position.

If the windows fog up, set the air flow control to the defrost ( ) position. (The A/C will turn on automatically and "Fresh" mode will be activated.)

For maximum heat, move the temperature control to "Warm".

BI-LEVEL HEATING

B700A02A-AAT

OGK016700

Your Hyundai is equipped with bi-level heating controls. This makes it possible to have cooler air from the dashboard vents and warmer air from the floor outlets at the same time. To use this feature:

- Set the air intake control switch to the fresh air ( ) position.
- Set the air flow control at the bi-level ( ) position.
- Adjust the fan speed control to the desired speed.
- Set the temperature control between "Cool" and "Warm".

VENTILATION

B710A01A-AAT

OGK016701

To operate the ventilation system:

- o Set the air intake control switch at the fresh air ( ) position.
- o To direct all intake air to the dashboard vents, set the airflow control to the face ( ) position.
- o Adjust the fan speed control to the desired speed.
- o Set the temperature control between "Cool" and "Warm".

DEFROSTING/DEFOGGING

B720A02FC-GAT

OGK016702

Use the heating/ventilation system to defrost or defog the windshield:

To remove interior fog on the windshield:

- o Set the air flow control to the defrost ( ) position. (The A/C will turn on automatically and "Fresh" mode will be activated.)
- o Set the temperature control to the desired position.
- o Set the fan speed control between "1" and "4" position.

OGK016703

To remove frost or exterior fog on the windshield:

- o Set the air flow control to the defrost ( ) position. (The A/C will turn on automatically and "Fresh" mode will be activated.)
- o Set the temperature control to warm.
- o Set the fan speed control to position "3" or "4".

NOTE:
When the A/C is operated continuously on the floor-defrost level ( ) or defrost level ( ), it may cause fog to form on the exterior windshield. If this occurs, set the air flow control to the face level position ( ) and fan speed control to the low position.

B730A01L-AAT
Operation Tips

- To keep dust or unpleasant fumes from entering the car through the ventilation system, temporarily set the air intake control to "Recirculation". Be sure to return the control to "Fresh" when the irritation has passed to keep fresh air in the vehicle. This will help keep the driver alert and comfortable.
- Air for the heating/cooling system is drawn in through the grilles just ahead of the windshield. Care should be taken that these are not blocked by leaves, snow, ice or other obstructions.
- To prevent interior fog on the windshield, set the air intake control to the fresh air ( ) position, turn on the air conditioning system, and adjust temperature control to desired temperature fan speed to the desired position.

B740A01S-AAT
(If installed)
Air Conditioning Switch

The air conditioning is turned on or off by pushing the A/C button on the heating/air conditioning control panel.

B740B02A-AAT

Air Conditioning Operation Cooling

OGK016704

To use the air conditioning to cool the interior:

- o Turn on the fan control switch.
- o Turn on the air conditioning switch by pushing in on the switch. The air conditioning indicator light should come on at the same time.
- o Set the air intake control switch to the fresh air ( ) position.
- o Set the temperature control to "Cool". ("Cool" provides maximum cooling. The temperature may be moderated by moving the control toward "Warm".)
- o Adjust the fan control to the desired speed. For greater cooling, turn the fan control to one of the higher speeds or temporarily select the recirculate ( ) position on the air intake control switch.

B740C01A-AAT

De-Humidified Heating

OGK016705

For dehumidified heating:

- o Turn on the fan control switch.
- o Turn on the air conditioning switch. The air conditioning indicator light should come on at the same time.
- o Set the air intake control switch to the fresh air ( ) position.
- o Set the air flow control to the face ( ) position.
- o Adjust the fan control to the desired speed.
- o For more rapid action, set the fan at one of the higher speeds.
- o Adjust the temperature control to provide the desired amount of warmth.

B740D01A-AAT

Operation Tips

- o If the interior of the car is hot when you first get in, open the windows for a few minutes to expel the hot air.
- o When you are using the air conditioning system, keep all windows closed to keep hot air out.
- o When moving slowly, as in heavy traffic, shift to a lower gear. This increases engine speed, which in turn increases the speed of the air conditioning compressor.
- o On steep grades, turn the air conditioning off to avoid the possibility of the engine over-heating.
- o During winter months or in periods when the air conditioning is not used regularly, run the air conditioning once every month for a few minutes. This will help circulate the lubricants and keep your system in peak operating condition.

AUTOMATIC HEATING AND COOLING CONTROL SYSTEM

B970A01Y-AAT

(If Installed)

Your Hyundai is equipped with an automatic heating and cooling control system controlled by simply setting the desired temperature.

B970B03GK-GAT

Heating and Cooling Controls

1. Temperature Control Button
2. Display Window
3. Blower Fan Control
4. AUTO (Automatic Control) Switch
5. Air Flow Control Switch
6. Air Conditioning Switch
7. Defroster Switch
8. Rear Window Defroster Switch
9. Air Intake Control Switch
10. OFF Switch
11. Air Quality System Switch (If installed)

TYPE A (Without Air Quality System)

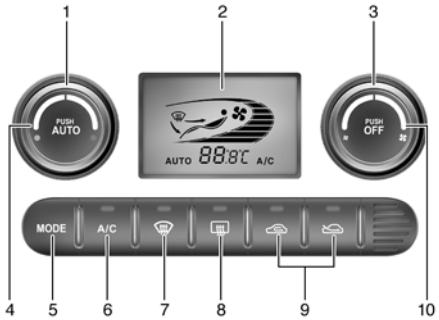

OGK046057C

TYPE B (With Air Quality System)

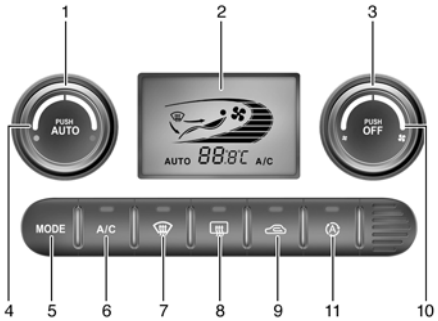

OGK046057L

B970C01NF-GAT

Automatic Operation

OGK046058

The FATC (Full Automatic Temperature Control) system automatically controls heating and cooling by doing as follows:

1. Push the "AUTO" switch. The indicator light will illuminate confirming that the Face, Floor and/or Bi-Level modes as well as the blower speed and air conditioner will be controlled automatically.

OGK046061

2. Turn the "TEMP" knob to set the desired temperature.
   The temperature will increase to the maximum 32°C(90°F) by turning the knob clockwise.
   The temperature will decrease to the minimum 17°C(62°F) by turning the knob counterclockwise.

NOTE:

If the battery has been discharged or disconnected, the temperature mode will reset to Centigrade degrees.
This is a normal condition and you can change the temperature mode from Centigrade to Fahrenheit as follows;
Press the "OFF" and "AUTO" switch simultaneously for 3 seconds.
The display shows that the unit of temperature is adjusted to Centigrade or Fahrenheit (°C → °F or °F → °C).

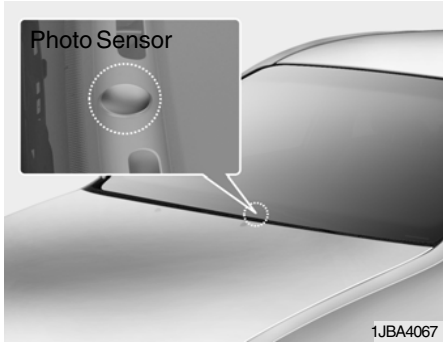

NOTE:
Never place anything over the sensor which is located on the instrument panel to ensure better control of the heating and cooling system.

B995A01GK-GAT
Outside Temperature Switch

Press the button, the display show that the unit of outside temperature is adjusted to centigrade or fahrenheit (°C → °F or °F → °C).

B980A01Y-AAT
MANUAL OPERATION

The heating and cooling system can be controlled manually as well by pushing buttons other than the "AUTO" button. In this state, the system sequentially works according to the order of buttons selected.
The function of the buttons which are not selected will be controlled automatically.
Press the "AUTO" button in order to convert to automatic control of the system.

B980B01NF-AAT

Fan Speed Control

The fan speed can be set to the desired speed by turning the fan speed control knob. The higher the fan speed is, the more air is delivered. Pressing the "OFF" switch turns off the fan.

B670C02GK-AAT

Air Intake Control Switch (Without A.Q.S)

This is used to select fresh outside air or recirculation inside air.
To change the air intake control mode, (Fresh mode, Recirculation mode) push the control button.

FRESH MODE ( ) : The indicator light on the button goes on when the air intake control is in fresh mode.

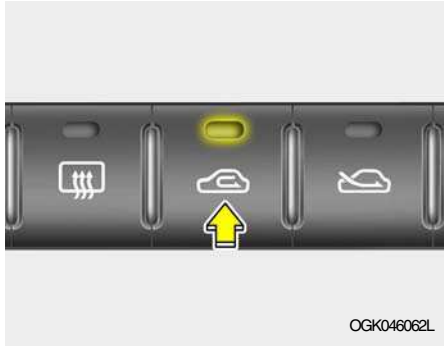

RECIRCULATION MODE ( ) : The indica-tor light on the button is illuminated when the air intake control is in recirculation mode.

With the "Fresh" mode selected, air enters the vehicle from the outside and is heated or cooled according to the function selected.

With the "Recirculation" mode selected, air from within the passenger compartment will be drawn through the heating system and heated or cooled according to the function selected.

NOTE:
It should be noted that prolonged operation of the heating system in "recirculation" mode will give rise to fogging of the windshield and side windows and the air within the passenger compartment will become stale. In addition, prolonged use of the air conditioning with the "Recirculation" mode selected may result in the air within the passenger compartment becoming excessively dry.

B980C02GK-GAT

Air Intake Control Switch (With A.Q.S) (If Installed)

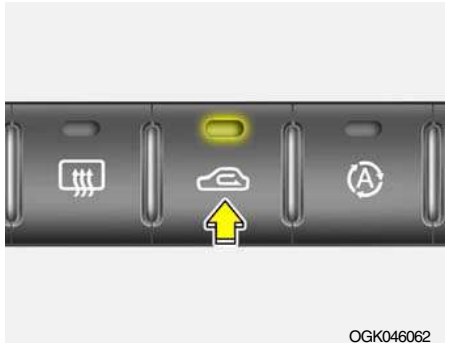

This is used to select fresh outside air or recirculate inside air automatically.

▭ : OFF
▬ : ON

Fresh mode :

Air enters the vehicle from the outside and is heated or cooled according to the function selected.

Recirculation mode :

Air from within the passenger compartment will be drawn through the heating system and heated or cooled according to the function selected.

Exhaust gas cutoff mode :

Air enters the vehicle from the outside. But if exhaust gas enters the vehicle from the outside, the exhaust gas cutoff mode ( ) is automatically converted to the ( ) mode, to prevent exhaust gas from entering the vehicle.

NOTE:
It should be noted that prolonged operation of the heating system in recirculation mode ( ) will give rise to misting of the windshield and side windows and the air within the passenger compartment will become stale. In addition, prolonged use of the air conditioning with the recirculation mode ( ) selected may result in the air within the passenger compartment becoming excessively dry.

CAUTION:
If the windows fog up with the Recirculation or A.Q.S mode selected, set the air intake control to the Fresh air position or A.Q.S control to "OFF".

B740A01S-AAT
Air Conditioning Switch

The air conditioning is turned on or off by pushing the A/C button on the heating/air conditioning control panel.

B980D01Y-AAT
Heating and Cooling System Off

Press the "OFF" button to stop the operation of the heating and cooling system.

B980E01NF-GAT

Air Flow Control

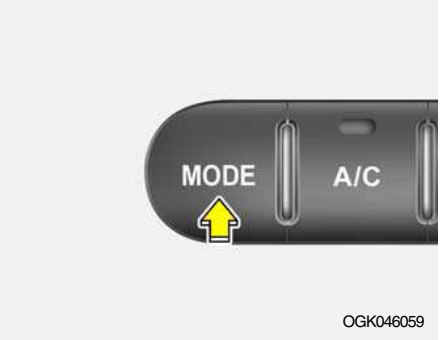

This is used to direct the flow of air. Air can be directed to the floor, dashboard outlets, or windshield. Four symbols are used to represent Face, Bi-Level, Floor, Floor-Defrost position.

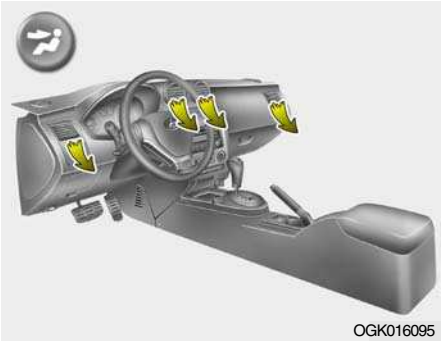

Face-Level

When selecting the "Face" mode, the indicator light will come on, causing air to be discharged through the face level vents.

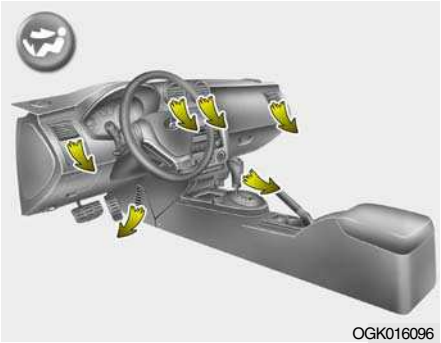

Bi-Level

When selecting the "Bi-Level" mode, the indicator light will come on and the air will be discharged through the face vents and the floor vents. This makes it possible to have cooler air from the dashboard vents and warmer air from the floor outlets at the same time.

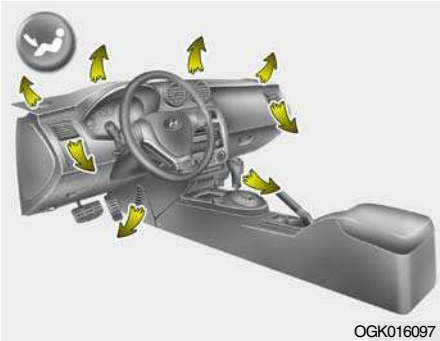
OGK016097

Floor-Level

When selecting the "Floor-Level" mode, the indicator light will come on and the air will be discharged through the floor vents, windshield defroster nozzle, side defroster nozzle, side ventilator.

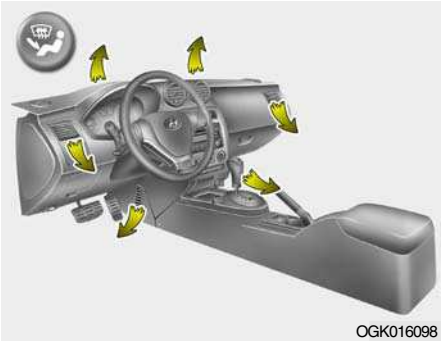
OGK016098

Floor-Defrost Level

When selecting the "Floor-Defrost" mode, the indicator light will come on and the air will be discharged through the windshield defrost nozzle, the floor vents, side defroster nozzle, side ventilator.

B980F01GK-GAT

Defrost Switch

OGK046060

When the "Defrost" button is pressed, the ( ) mode will be automatically selected and the air will be discharged through the windshield defrost nozzle, side defroster nozzle and side ventilator. To assist in defrosting, the air conditioning will operate if ambient temperature is higher than 2°C, and automatically turns off if the ambient temperature drops below 0.5°C.

B980G01NF-GAT

Auto de-humidified control (If Installed)

There is a humidity sensor in the middle of the crash pad. If it becomes very humid inside the car, the air conditioning is turned on automatically to control the humidity.

CLIMATE CONTROL AIR FILTER (IN FRONT OF BLOWER UNIT)

B760A06GK-GAT

(If Installed)

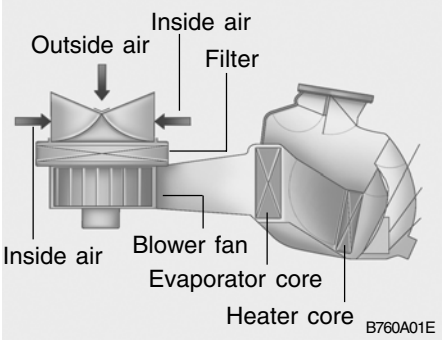

The climate control air filter is located in front of the blower unit behind the glove box.
It operates to decrease the amount of pollutants entering the car.
To replace the climate control air filter, refer to the page 6-19.

CAUTION:

- **Replace the filter every 15,000 km (10,000 miles) or once a year.**
  If the car is being driven in severe conditions such as dusty, rough roads, more frequent climate control air filter inspections and changes are required.
- **When the air flow rate is decreased, it must be checked at authorized dealer.**

B870A01A-GAT

Fixed Rod Antenna

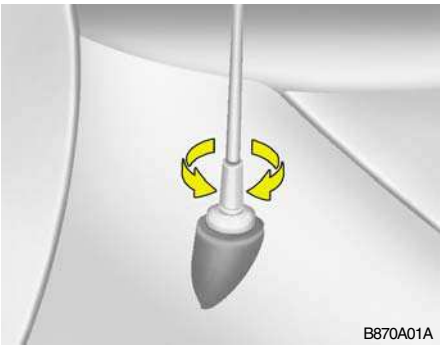

Your car uses a fixed rod antenna to receive both AM and FM broadcast signals.
This antenna is a removable type. To remove the antenna, turn the antenna counterclockwise. To install the antenna, turn the antenna clockwise.

CAUTION:
Be sure to remove the antenna before washing the car in an automatic car wash or the antenna may be damaged.

B870D01Y-GAT

Glass Antenna (If Installed)

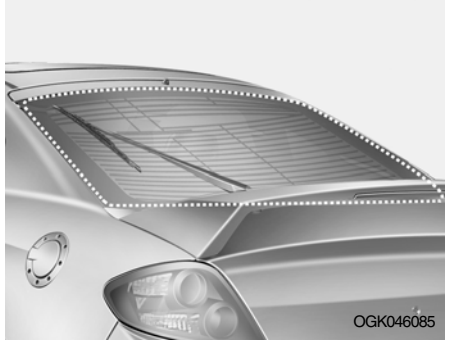

When the radio power switch is turned on while the ignition key is in either the "ON" or "ACC" position, your car will receive both AM and FM broadcast signals through the antenna in the rear window glass.

CAUTION:
- **Do not clean the inner side of the rear window glass with an abrasive type of glass cleaner or use a scraper to remove foreign deposits from the inner surface of the glass as this may cause damage to the antenna elements.**
- **Avoid adding metallic coating (Such as Ni, Cd, and so on). These can disturb receiving AM and FM broadcast signals.**

B750A02A-AAT

How Car Audio Works

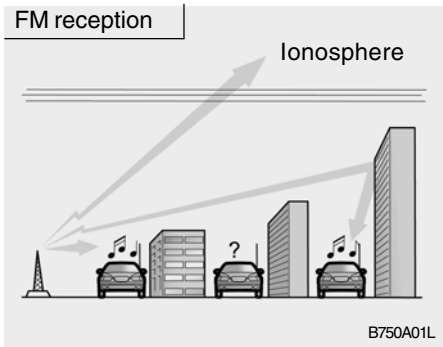

AM and FM radio signals are broadcast from transmitter towers located around your city. They are intercepted by the radio antenna on your car. This signal is then received by the radio and sent to your car speakers.

When a strong radio signal has reached your vehicle, the precise engineering of your audio system ensures the best possible quality reproduction. However, in some cases the signal coming to your vehicle may not be strong and clear. This can be due to factors such as the distance from the radio station, closeness of other strong radio stations or the presence of buildings, bridges or other large obstructions in the area.

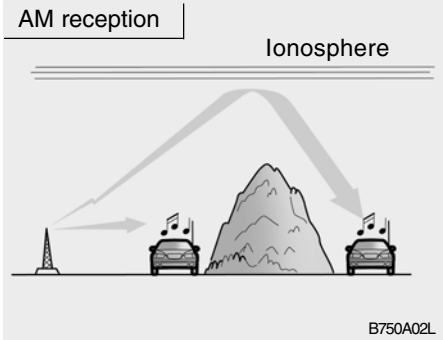

AM broadcasts can be received at greater distances than FM broadcasts. This is because AM radio waves are transmitted at low frequencies. These long, low frequency radio waves can follow the curvature of the earth rather than travelling straight out into the atmosphere. In addition, they curve around obstructions so that they can provide better signal coverage.

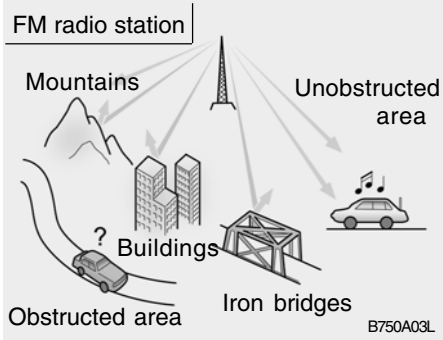

FM broadcasts are transmitted at high frequencies and do not bend to follow the earth's surface. Because of this, FM broadcasts generally begin to fade at short distances from the station. Also, FM signals are easily affected by buildings, mountains, or other obstructions. These can result in certain listening conditions which might lead you to believe a problem exists with your radio. The following conditions are normal and do not indicate radio trouble:

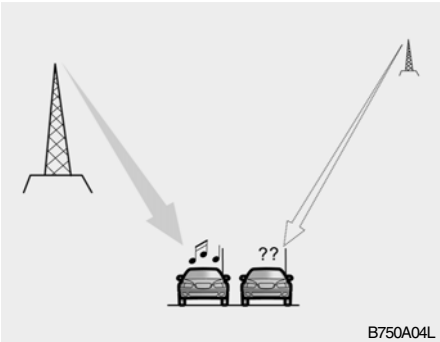

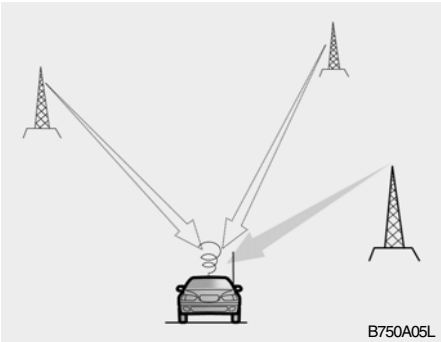

- Fading - As your car moves away from the radio station, the signal will weaken and sound will begin to fade. When this occurs, we suggest that you select another stronger station.
- Flutter/Static - Weak FM signals or large obstructions between the transmitter and your radio can disturb the signal causing static or fluttering noises to occur. Reducing the treble level may lessen this effect until the disturbance clears.
- Station Swapping - As a FM signal weakens, another more powerful signal near the same frequency may begin to play. This is because your radio is designed to lock onto the clearest signal. If this occurs, select another station with a stronger signal.
- Multi-Path Cancellation - Radio signals being received from several directions can cause distortion or fluttering. This can be caused by a direct and reflected signal from the same station, or by signals from two stations with close frequencies. If this occurs, select another station until the condition has passed.

B750B02Y-AAT

Using a cellular phone or a two-way radio

When a cellular phone is used inside the vehicle, noise may be produced from the audio equipment. This does not mean that something is wrong with the audio equipment. In such a case, use the cellular phone at a place as far as possible from the audio equipment.

CAUTION:
When using a communication system such a cellular phone or a radio set inside the vehicle, a separate external antenna must be fitted. When a cellular phone or a radio set is used with an internal antenna alone, it may interfere with the vehicle's electrical system and adversely affect safe operation of the vehicle.

WARNING:
Don't use a cellular phone when you are driving. Stop at a safe place to use a cellular phone.

H280A01GK-GAT

STEREO RADIO OPERATION (H280) (If Installed)

1, 2. Power Button and Volume Control
3. Radio Band Selection Button
4. Automatic Channel Selection Memorization Button
5. Automatic Channel Selection Button
6. Preset Button
7. Information Display Screen (LCD)
8. AUDIO Select Button
9. Manual Channel Selection Control (TUNE Control)
10. EQ Button

GK_280_UR

H280B01GK-GAT

1. Power Button (POWER ON)

Press this button when the ignition switch of the automobile is set to ACC (1st notch) or ON (2nd notch) to turn on the power and the audio system. Press once again when the audio system is on to turn off the power.

2. Volume Control (VOLUME)

Turn the volume control clockwise to increase volume and counterclockwise to reduce. The volume level will be displayed on the screen when you adjust the volume.

3. Radio Band Selection Button (FM/AM)

- o Press this button to listen to either FM or AM.
- o The radio will be set to each of the following modes each time you press the button.
  FM1 ➟ FM2 ➟ AM

NOTE:
Push this button when the power is off to turn on the power automatically.

4. Automatic Channel Selection Memorization Button (BSM: Best Station Memory)

Press this button once to automatically select channels starting from the current channel and memorize into the preset buttons (1~6) in the selected order and turn to the channel memorized in preset button 1.

5. Automatic Channel Selection Button (SEEK)

Press the upper side of the button to automatically increase frequency and select and play the receivable channel. Press the lower side of the button to automatically decrease frequency and select and play the next available channel.

6. Preset Button (1~6)

Press this button to listen to the channels memorized to each button. If you want to memorize the current channel to the preset button, press the button for more than 1.5 seconds then the channel will be memorized to the button with a beep.

7. Information Display Screen (LCD)

A variety of information will be displayed on the screen including the radio bands (FM1/FM2/AM) while listening to the radio, frequency of each channel, the number of preset channel and "ST" for FM stereo broadcasting.

8. AUDIO Select Button

Press this button to control tone. Each time you press the button, the mode will switch from BASS ➟ MIDDLE ➟ TREBLE ➟ FADER ➟ BALANCE and the mode will be displayed on the screen.

BASS	Turn the TUNE Controller clockwise to increase bass tone and counterclockwise to decrease.
MIDDLE	Turn the TUNE Controller clockwise to increase middle tone and counter-clockwise to decrease.
TREBLE	Turn the TUNE Controller clockwise to increase treble tone and counter-clockwise to decrease.
BALANCE	Turn the TUNE Controller clockwise to increase right speaker volume and counterclockwise to increase left speaker volume.
FADER	Turn the TUNE Controller clockwise to increase rear speaker volume and counterclockwise to increase front speaker volume.

9. Manual Channel Selection Control (TUNE)

Turn this controller while listening to the radio to manually adjust frequency. Turn clockwise to increase frequency and counterclockwise to reduce frequency.

10. EQ Button

Each time you press this button the sound equalizer setting will switch from POP ➟ JAZZ ➟ ROCK ➟ CLASSIC ➟ OFF (Not displayed).

CAUTION:

- **Do not place beverages close to the audio system. The audio system mechanism may be damaged if you spill them.**
- **Do not strike or allow anything to impact the audio system, damage to the system mechanisms could occur.**

H280C01GK-GAT

CASSETTE TAPE PLAYER OPERATION (H280) (If Installed)

1. TAPE MODE Selection Button / TAPE Side Selection Button
2. Cassette Tape Deck
3. Tape Ejection Button
4. DOLBY Selection Button
5. Fast Rewind
6. Fast Forward
7. Automatic Previous Track Selection Button
8. Automatic Next Track Selection Button
9. Section Repeat Button (REPEAT)
10. Information Display Screen (LCD)

GK_280_UR

H280D01GK-GAT

1. TATE MODE Selection Button / TAPE Side Selection Button

Press this button to turn to the TAPE mode. The system will play the tape if the tape is inside the deck and turn off CD or radio if either mode was on.
If you press this button while the tape is being played, the other side of the tape will be played. The screen will display "PLAY" along with the direction of play.

2. Cassette Tape Deck (Tape Insert)

When you insert the tape, push it into the deck while the side of tape you want to listen to face upward. If the ignition switch of the automobile is set to ACC (1st notch) or ON (2nd notch), the tape will be automatically played when you insert it even if the power of the audio system is off.

3. Tape EJECT Button

Press this button while the tape is being played to eject the tape.
This will eject the tape even when the ignition switch of the automobile is set to OFF.

NOTE:
Push this button to turn the power on automatically when the TAPE is inside and the power is off.

4. DOLBY Selection Button

Press this button when you play Dolbyized type to reduce noise in the medium to high bands due to Dolby effect. The screen will display "DOLBY." The "DOLBY" mark will disappear when you press it again.

5. Fast Rewind (REW)

Press [REW] button while playing the tape to rewind the tape to the beginning and the screen will display "REW." Press it again while rewinding to play from the current position.

6. Fast Forward (FF)

Press [FF] button while playing the tape to wind the tape to the end and the screen will display "FF." Press it again while winding to play from the current position.

7. Automatic Previous Track Selection Button (TRACK DOWN)

Press [TRACK ∨] button to rewind the tape to the beginning of the song you are listening to. While rewinding the tape, the screen will display "AMS." Press the button again while rewinding the tape to play from the current position.

8. Automatic Next Track Selection Button (TRACK UP)

Press [SEEK ∧] button to wind the tape to the beginning of the song next to the song you are listening to. While winding the tape, the screen will display "AMS." Press the button again while winding the tape to play from the current position.

9. Section Repeat Button (RPT)

Press [RPT] button to repeat the song you are listening to.

10. Information Display Screen (LCD)

Various status of cassette tape will be displayed on the screen while listening to the tape such as "PLAY" while playing the tape, the direction of play "◀ or ▶ ", "FF" and "REW" for fast forward and rewind, "METAL" for playing metal tapes as well as "DOLBY" and "RPT."

CAUTION:

- **Do not insert anything like coins into the player slot as damage to the unit may occur.**
- **Do not place beverages close to the audio system. The playback mechanism may be damaged if you spill them.**
- **Do not strike or allow anything to impact the audio system, damage to the system mechanisms could occur.**

H280E01GK-GAT

COMPACT DISC PLAYER OPERATION (H280) (If installed)

1. CD Deck
2. CD Indicator
3. CD EJECT
4. CD Selection Button
5. Fast Backward
6. Fast Forward
7. Automatic Previous Track Selection Button
8. Automatic Next Track Selection Button
9. Section Repeat Button
10. Information Display Screen (LCD)
11. BOOKMAKR Button
12. RDM (Random) Button
13. SCROLL Button
14. FILE Search Knob
15. Directory Search Button
16. SCAN Button

GK_280_UR

H280F01GK-GAT

1. CD Deck

Make sure the printed side of the disk faces upward when you insert the disk. If you insert the disk when the ignition switch of the automobile is set to ACC (1st notch) or ON (2nd notch), the CD Deck will automatically play CD even if the power was off. This CD Deck can play both 12cm and 8cm audio disks. If you insert video CD, then the screen will display "ERROR DISC" and eject the disk.

2. CD Indicator

This indicator light will be on if the CD is inside the CDP deck whether the audio system is on or not. This light will go off when the CD is ejected.

3. CD Eject Button

Press [▲] button to eject the disk while playing the disk. This will eject the CD whether or not the ignition switch is on or off.

4. CD Selection Button

Press this button while the disk is inside the CDP deck to listen to the CD even if the radio or tape was on or if CD changer was in action. If you press [CD/MP3] button when the disk is ejected and hanging in the opening, the system will automatically insert the disk and play the CD.

5. Fast Backward (REW)

Press and hold [REW] button while playing CD then the player will play the disk backwards 5 times the regular speed for first 5 seconds and 15 times faster after that. The sound will be reduced by 12dB while you are holding the button.

6. Fast Forward (FF)

Press and hold [FF] button while playing CD then the player will play the disk forward 5 times the regular speed for first 5 seconds and 15 times faster after that. The sound will be reduced by 12dB while you are holding the button.

NOTE:

If you press this button when the power is off and CD is inside the deck, the power will be automatically turned on.

7. Automatic Previous Track Selection Button

Press [TRACK ∨] button to go to the beginning of the song you are listening to while playing the CD. Press the button again to go to the beginning of the song before the song you were listening to. When you press this button while listening to the first track of the CD then the system will move to the beginning of the last track of the CD.

8. Automatic Next Track Selection Button

Press [SEEK ∧] button to go to the beginning of the song next to the song you are listening to while playing the CD.

9. Section Repeat Button (RPT)

Press [RPT] button to repeat the song you are listening to. Press this button again to cancel repetition.

10. Information Display Screen (LCD)

Various status of the CD will be displayed on the screen while listening to the CD such as "CD" while playing the CD, the track title and number, RPT, RDM and MARK.

11. BOOKMARK Button

This button lets you select the songs you want to listen to in the CD. Move to the track and press [MARK] for more than 1 second then the screen will display "M" and select the track. Press the button less than 1 second to play the songs you selected and the system will display "M"

12. RDM (Random) Button

Press [RDM] button to play the songs in random order.

13. SCROLL Button

If the title of MP3 or WMA file is too long, press this button to scroll the entire song title on the LCD screen.

14. FILE Search Knob

Turn this knob to the left and right while listening to CD to change track number. If you press the button within 5 seconds then the selected track will be played. If you do not press the button within 5 seconds then it will display the currently played track.

15. Directory Search Button

In case the MP3/WMA CD contains more than 2 folders, press this button up and down to search each directory. You can move to the directory and turn the search knob to search through the tracks. If you do not press the knob within 5 seconds after you select a track then the system will automatically return to the current track.

16. SCAN Button

If you press this button, the player will play 10 seconds of each track. Press it again to cancel scanning.

CAUTION:

- **Do not insert warped or poor quality discs into the CD player as damage to the unit may occur.**
- **Do not insert anything like coins into the player slot as damage to the unit may occur.**
- **Do not place beverages close to the audio system. The playback mechanism may be damaged if you spill them.**
- **Do not strike or allow anything to impact the audio system, damage to the system mechanisms could occur.**
- **Off-road or rough surface driving may cause the compact disc to skip. Do not use the compact disc when driving in such conditions as damage to the compact disc face could occur.**
- **Do not attempt to grab or pull the compact disc out while the disc is being pulled into the audio unit by the self-loading mechanism. Damage to the audio unit and compact disc could occur.**
- **Avoid using recorded compact discs in your audio unit. Original compact discs are recommended.**

H265A01GK-GAT

STEREO RADIO OPERATION (H265) (If installed)

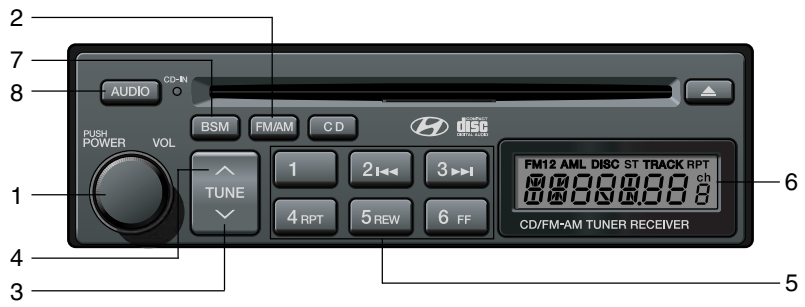

1. Power Button and Volume Control (Power On / Volume)
2. Radio Band Selection Button
3. Automatic Channel Selection Button(SEEK)
4. Manual Channel Selection Control (TUNE)
5. Preset Button
6. Information Display Screen (LCD)
7. BSM Button (Best Station Memory)
8. AUDIO Select Button

GK_265_UR

H265B01GK-GAT

1. Power Button and Volume Control (POWER ON/ VOLUME)

Press this button when the ignition switch of the automobile is set to ACC (1st notch) or ON (2nd notch) to turn on the power of the audio system. When the power is turned on, turn the volume control clockwise to increase volume and counterclockwise to reduce. Press once again when the audio system is on to turn off the power.

2. Radio Band Selection Button (FM/AM)

North American Standard

- o Press this button to listen to either FM or AM.
- o The radio will be set to each mode each time you press the button in a loop; FM1➡FM2➡AM➡FM1 and soon.

European Standard

- o Press this button to listen to either FM or AM.
- o The radio will be set to each mode each time you press the button in a loop; FM1➡FM2➡MW➡LW➡FM1 and soon.

3. Automatic Channel Selection Button (SEEK)

Press and hold the [∧] button for more than 0.5 seconds until you hear the beep to automatically increase frequency and press and hold the [∨] button for more than 0.5 seconds until you hear the beep to automatically decrease frequency to select and play the next available channel. If the received channel is memorized in the preset buttons then the screen will display the memorized channel.

4. Manual Channel Selection Control (TUNE)

Press and hold [∧] button for less than 0.5 seconds to increase frequency by 1 step and [∨] to decrease.
Press and hold [∧] or [∨] button for more than 0.5 seconds even after you hear the beep then the frequency will increase or decrease quickly. When you release the button, the system will turn to the automatic selection mode.

5. Preset Button (1~6)

Press this button but do not hold for no more than 2 seconds to listen to the channels memorized to each button. If you want to memorize the current channel to the preset button when you are listening to channel not memorized to any of the preset buttons, press the button and hold for more than 2 seconds then the channel will be memorized to the button with the beep.

6. Information Display Screen (LCD)

A variety of information will be displayed on the screen including the radio bands (FM1/FM2/AM) while listening to the radio, frequency of each channel, the number of preset channel and "ST" for FM stereo broadcasting.

7. BSM Button(Best Station Memory)

Press this button once to automatically select well-received channels and memorize them into the preset buttons (1~6) in the selected order and turn to the channel memorized in preset button 1. If no channel is received after activating BSM and no channel is memorized, the system will turn to the previously received channel.

8. AUDIO Select Button

o Press this button to change AUDIO function control mode.
Current State➡BASS➡MID➡TRE➡FAD➡BAL

o Select the audio control mode you want and increase or decrease the setting by ±10 from currently audio control mode. If no actions are taken, the screen will return to the previous display after 3 seconds.

BASS	Turn the TUNE Controller clockwise to increase bass tone and counterclockwise to decrease.
MIDDLE	Turn the TUNE Controller clockwise to increase middle tone and counterclockwise to decrease.
TREBLE	Turn the TUNE Controller clockwise to increase treble tone and counterclockwise to decrease.
BALANCE	Turn the TUNE Controller clockwise to increase right speaker volume and counterclockwise to increase left speaker volume.
FADER	Turn the TUNE Controller clockwise to increase rear speaker volume and counterclockwise to increase front speaker volume.

CAUTION:

- **Do not place beverages close to the audio system. The audio system mechanism may be damaged if you spill them.**
- **Do not strike or allow anything to impact the audio system, damage to the system mechanisms could occur.**

H265C01GK-GAT

COMPACT DISC PLAYER OPERATION (H265) (If installed)

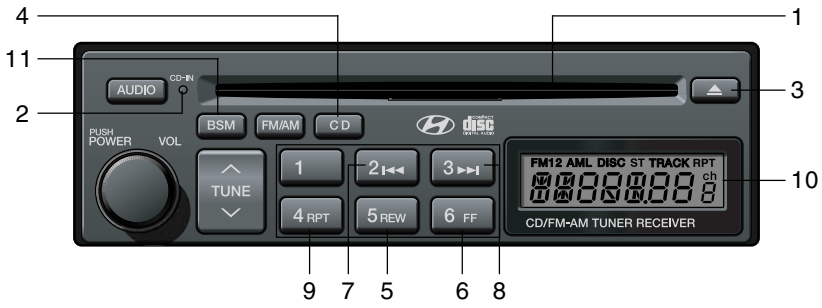

1. CD DECK
2. CD INDICATOR
3. CD Disc EJECT Button
4. CD Selection Button
5. Fast Backward
6. Fast Forward
7. Automatic Previous Track Selection Button
8. Automatic Next Track Selection Button
9. Section Repeat Button
10. Information Display Screen (LCD)
11. SCAN Button

GK_265_UR

H265D01GK-GAT

1. CD Deck

Make sure the printed side of the disk faces upward when you insert the disk. If you insert the disk when the ignition switch of the automobile is set to ACC (1st notch) or ON (2nd notch), the CD DECK will automatically play CD even if the power was off.
This CD DECK can play both 12cm and 8cm audio disks. If you insert video CD, then the screen will display the status of the CD but it will not play the video file and therefore there will be no sound.

2. CD Indicator

This indicator light will be on if the CD is inside the CD DECK if the ignition switch of the automobile is set to ACC (1st notch) or ON (2nd notch) regardless of whether the audio system is on or off. This light will go off when the CD is ejected.

3. CD Eject Button

Press [▲] button to eject the disk while playing the disk. This will eject the CD whether or not the ignition switch is on or off.

4. CD Selection Button

Press this button while the disk is inside the CD DECK to listen to the CD. If the radio was on previously then it will be turned off and CD player will be activated. If you press [CD] button when the disk is ejected and hanging in the opening the system will automatically insert the disk and play the CD.

5. Fast Backward (REW)

Press and hold [REW] button while playing CD then the player will play the disk backwards 5 times the regular speed for first 5 seconds and 15 times faster after that. The sound will be reduced by 12dB while you are holding the button.

6. Fast Forward (FF)

Press and hold [FF] button while playing CD then the player will play the disk forward 5 times the regular speed for first 5 seconds and 15 times faster after that. The sound will be reduced by 12dB while you are holding the button.

7. Automatic Previous Track Selection Button

Press [|◀◀] button to go to the beginning of the song you are listening to while playing the CD. Press the button again to go to the beginning of the song before the song you were listening to. When you press this button while listening to the first track of the CD then the system will move to the beginning of the last track of the CD.

8. Automatic Next Track Selection Button

Press [▶▶|] button to go to the beginning of the song next to the song you are listening to while playing the CD. When you press this button while listening to the last track of the CD then the system will move to the beginning of the first track of the CD.

9. Section Repeat Button (RPT)

Press [RPT] button to repeat the song you are listening to. Press this button again to cancel repetition.

10. Information Display Screen (LCD)

Various status of the CD will be displayed on the screen while listening to the CD such as "CD" while playing the CD, the track title and number and RPT.

11. SCAN Button

If you press this button, the player will play 10 seconds of each track. Press it again to cancel scanning.

CAUTION:

- **Do not insert warped or poor quality discs into the CD player as damage to the unit may occur.**
- **Do not insert anything like coins into the player slot as damage to the unit may occur.**
- **Do not place beverages close to the audio system. The playback mechanism may be damaged if you spill them.**
- **Do not strike or allow anything to impact the audio system, damage to the system mechanisms could occur.**
- **Off-road or rough surface driving may cause the compact disc to skip. Do not use the compact disc when driving in such conditions as damage to the compact disc face could occur.**
- **Do not attempt to grab or pull the compact disc out while the disc is being pulled into the audio unit by the self-loading mechanism. Damage to the audio unit and compact disc could occur.**
- **Avoid using recorded compact discs in your audio unit. Original compact discs are recommended.**

H465A01GK-GAT

STEREO RADIO OPERATION (H465) (If Installed)

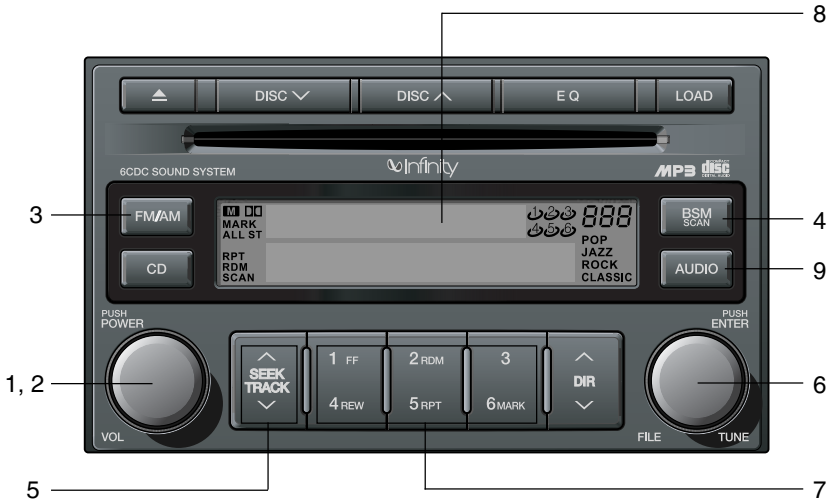

1, 2. Power Button and Volume Control
3. Radio Band Selection Button
4. Automatic Channel Selection Memorization Button
5. Automatic Channel Selection Button
6. Manual Channel Selection Control (TUNE Control)
7. Preset Button
8. Information Display Screen (LCD)
9. AUDIO Select Button

GK_465_UR

H465B01GK-GAT

1. Power Button (POWER ON)

Press this button when the ignition switch of the automobile is set to ACC (1st notch) or ON (2nd notch) to turn on the power and the audio system. Press once again when the audio system is on to turn off the power.

2. Volume Control (VOLUME)

Turn the volume control clockwise to increase volume and counterclockwise to reduce. The volume level will be displayed on the screen when you adjust the volume.

3. Radio Band Selection Button (FM/AM)

- o Press this button to listen to either FM or AM.
- o The radio will be set to each of the following modes each time you press the button.
  FM1 ➟ FM2 ➟ AM

NOTE:
Push this button when the power is off to turn on the power automatically.

4. Automatic Channel Selection Memorization Button (BSM: Best Station Memory)

Press this button once to automatically select channels starting from the current channel and memorize into the preset buttons (1~6) in the selected order and turn to the channel memorized in preset button 1.

5. Automatic Channel Selection Button (SEEK)

Press the [SEEK ∧] button to automatically increase frequency and press the [TRACK ∨] button to automatically decrease frequency to select and play the next available channel. If the received channel is memorized in the preset buttons then the screen will display the memorized channel.

6. Manual Channel Selection Control (TUNE)

Turn the TUNE control clockwise to increase frequency and counterclockwise to reduce frequency by 1 step for each click.

7. Preset Button (1~6)

Press this button to listen to the channels memorized to each button. If you want to memorize the current channel to the preset button, press the button for more than 1.5 seconds then the channel will be memorized to the button with a beep.

8. Information Display Screen (LCD)

A variety of information will be displayed on the screen including the radio bands (FM1/FM2/AM) while listening to the radio, frequency of each channel, the number of preset channel and "ST" for FM stereo broadcasting.

9. AUDIO Select Button

Press this button to control tone. Each time you press the button, the mode will switch from BASS➡MIDDLE ➡TREBLE➡FADER➡BALANCE and the mode will be displayed on the screen.

BASS	Turn the TUNE Controller clockwise to increase bass tone and counterclockwise to decrease.
MIDDLE	Turn the TUNE Controller clockwise to increase middle tone and counter-clockwise to decrease.
TREBLE	Turn the TUNE Controller clockwise to increase treble tone and counter-clockwise to decrease.
BALANCE	Turn the TUNE Controller clockwise to increase right speaker volume and counterclockwise to increase left speaker volume.
FADER	Turn the TUNE Controller clockwise to increase rear speaker volume and counterclockwise to increase front speaker volume.

CAUTION:

- **Do not place beverages close to the audio system. The audio system mechanism may be damaged if you spill them.**
- **Do not strike or allow anything to impact the audio system, damage to the system mechanisms could occur.**

H465C01GK-GAT

COMPACT DISC PLAYER OPERATION (H465) (If installed)

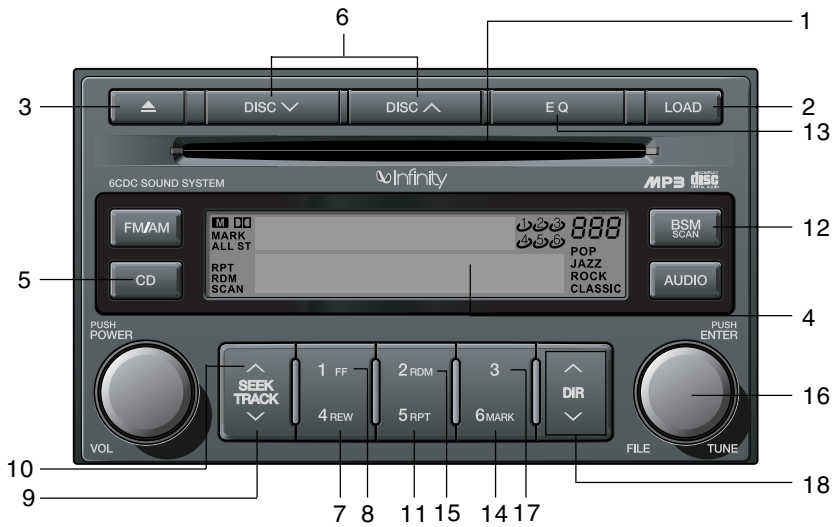

1. CD Deck
2. CD Load
3. CD Eject
4. Information Display Screen (LCD)
5. CD Changer Selection Button
6. Disc Selection Button
7. Fast Backward
8. Fast Forward
9. Automatic Previous Track Selection Button
10. Automatic Next Track Selection Button
11. Repeat Button
12. SCAN Button
13. EQ Button
14. MARK Button
15. RDM Button
16. File Search Knob
17. Scroll Button
18. Directory Search Button

GK_465_UR

H465D01GK-GAT

1.CD Deck

The deck will open only when you press [LOAD] button. Make sure the printed side of the disk faces upward when you insert the disk. The CD changer can only play 12cm disks. If you insert video CD or DATA CD, then the screen will display "ERROR DISC," eject the disk and return to the previous mode.

2. CD Load Button

When you press [LOAD] button, the empty lots of the CD Changer will be opened in the order of 1, 2, 3, 4, 5 and 6. When you insert CD, you can listen to the corresponding CD. In this case, the last CD you inserted will be played. If you do not take any actions after pressing (LOAD) then the (LOAD) will be cancelled.

3. CD Eject Button

When you press [▲] button, the currently played CD will be ejected. If you press the button for more than 2 seconds, you will be able to eject all CDs. If currently played CD is in the 3rd slot, the ejection order will be 3, 4, 5, 6, 1 and 2.

4. Information Display Screen (LCD)

This shows the location of disk inside the CD Changer and the corresponding CD deck number will flicker when you load or eject the CD.

5. CD Changer Selection Button

If the power was turned off when the CD is inside the CD changer or if you press "CD" button when radio was on, the system will play CD. If you press [CD] button when there is no CD in the changer then the system will display "NO DISK" for 2 seconds and return to the previous mode.

NOTE:

If you press this button when the power is off and CD is inside the deck, the power will be automatically turned on.

6. Disc Selection Button

If you press [DISC ∧] button while using CD Changer, the next disc will be played (If you press the button when you are listening to CD 1, the CD 2 will be played).

If you wish to listen to the previous CD, then press [DISC ∨] button then the previous disc will be played (If you press the button when you are listening to CD 2, the CD 1 will be played). If the CD Changer is not fully loaded, this will move to the next available deck. When the player moves from deck to deck, the screen will display the selected deck number.

7. Fast Backward (REW)

Press and hold [REW] button while playing CD then the player will play the disk backwards 5 times the regular speed for first 5 seconds and 15 times faster after that. The sound will be reduced by 12dB while you are holding the button.

8. Fast Forward (FF)

Press and hold [FF] button while playing CD then the player will play the disk forward 5 times the regular speed for first 5 seconds and 15 times faster after that. The sound will be reduced by 12dB while you are holding the button.

9. Automatic Previous Track Selection Button

Press [TRACK ∨] button to go to the beginning of the song you are listening to while playing the CD. Press the button again to go to the beginning of the song before the song you were listening to.

10. Automatic Next Track Selection Button

Press [SEEK ∧] button to go to the beginning of the song next to the song you are listening to while playing the CD.

11. Section Repeat Button (RPT)

Press [RPT] button to repeat the song you are listening to. Press this button again to cancel repetition.

12. SCAN Button

If you press this button, the player will play 10 seconds of each track. Press it again to cancel scanning.

13. EQ Button

Each time you press this button the sound equalizer setting will switch from POP➡JAZZ➡ROCK➡CLASSIC➡OFF (Not displayed).

14. BOOKMARK Button

This button lets you select the songs you want to listen to in the CD. Move to the track and press (MARK) for more than 1 second then the screen will display " M " and select the track. Press the button less than 1 second to play the songs you selected and the system will display " M "

15. RDM (Random) Button

Press [RDM] button to play the songs in random order.

NOTE:

When you use CD-R or CD-RW, the CD may not be played due to the manufacturing method of CD makers and the recording method of the user. In this case, change CD unless the continuous use of such CDs may cause damage to the system.

16. FILE Search Knob

Turn this knob to the left and right while listening to CD to change track number. If you press the button within 5 seconds then the selected track will be played. If you do not press the button within 5 seconds then it will display the currently played track.

17. SCROLL Button

If the title of MP3 or WMA file is too long, press this button to scroll the entire song title on the LCD screen.

18. Directory Search Button

In case the MP3/WMA CD contains more than 2 folders, press this button up and down to search each directory. You can move to the directory and turn the search knob to search through the tracks. If you do not press the knob within 5 seconds after you select a track then the system will automatically return to the current track.

CAUTION:

- Do not insert warped or poor quality discs into the CD player as damage to the unit may occur.
- Do not insert anything like coins into the player slot as damage to the unit may occur.
- Do not place beverages close to the audio system. The playback mechanism may be damaged if you spill them.
- Do not strike or allow anything to impact the audio system, damage to the system mechanisms could occur.
- Off-road or rough surface driving may cause the compact disc to skip. Do not use the compact disc when driving in such conditions as damage to the compact disc face could occur.
- Do not attempt to grab or pull the compact disc out while the disc is being pulled into the audio unit by the self-loading mechanism. Damage to the audio unit and compact disc could occur.

- Avoid using recorded compact discs in your audio unit. Original compact discs are recommended.

CARE OF DISCS

B850A02F-AAT

Proper Handling

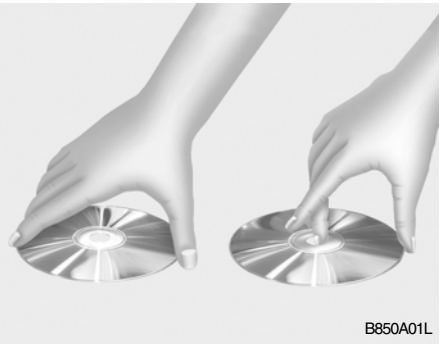

Handle your disc as shown. Do not drop the disc. Hold the disc so you will not leave fingerprints on the surface. If the surface is scratched, it may cause the pickup to skip signal tracks. Do not affix tape, paper, or gummed labels on the disc. Do not write on the disc.

Damaged Disc

Do not attempt to play damaged, warped or cracked discs. These could severely damage the playback mechanism.

Storage

When not in use, place your discs in their individual cases and store them in a cool place away from the sun, heat, and dust.
Do not grip or pull out the disc with your hand while the disc is being pulled into the unit by the self loading mechanism.

Keep Your Discs Clean

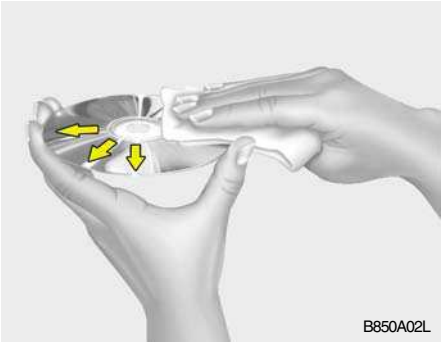

Fingerprints, dust, or soil on the surface of a disc could cause the pickup to skip signal tracks. Wipe the surface clean with a clean soft cloth. If the surface is heavily soiled, dampen a clean soft cloth in a solution of mild neutral detergent to wipe it clean.

CARE OF CASSETTE TAPES

B860A01A-AAT

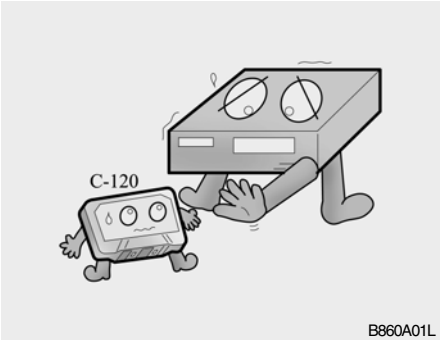

B860A01L

Proper care of your cassette tapes will extend the tape life and increase your listening enjoyment. Always protect your tapes and cassette cases from direct sunlight, severely cold and dusty conditions. When not in use, cassettes should always be stored in the original protective cassette case. When the vehicle is very hot or cold, allow the interior temperature to become more comfortable before listening to your cassettes.

- o Never leave a cassette inserted in the player when not being played. This could damage the tape player unit and the cassette tape.
- o We strongly recommend against the use of tapes longer than C-60 (60 minutes total). Tapes such as C-120 or C-180 are very thin and do not perform as well in the automotive environment.

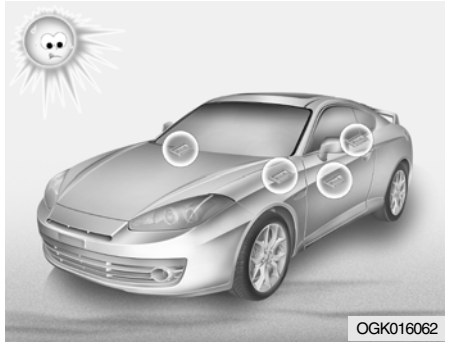

OGK016062

- o Be sure that the cassette label is not loose or peeling off or tape ejection may be difficult.
- o Never touch or soil the actual audio tape surfaces.
- o Keep all magnetized objects, such as electric motors, speakers or transformers away from your cassette tapes and tape player unit.
- o Store cassettes in a cool, dry place with the open side facing down to prevent dust from setting in the cassette body.
- o Avoid repeated fast reverse usage to replay one given tune or tape section. This can cause poor tape winding to occur, and eventually cause excessive internal drag and poor audio quality in the cassette. If this occurs, it can sometimes be corrected by fast winding the tape from end to end several times. If this does not correct the problem, do not continue to use the tape in your vehicle.

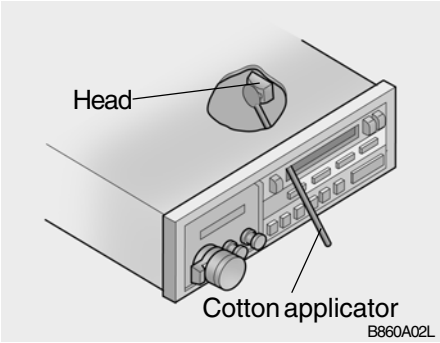

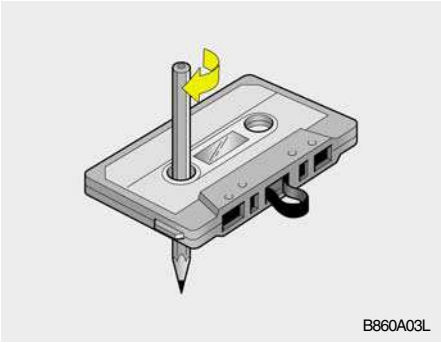

- o The playback head, capstan and pinch rollers will develop a coating of tape residue that can result in deterioration of sound quality, such as a wavering sound. They should be cleaned monthly using a commercially available head cleaning tape or special solution available from audio specialty shops. Follow the supplier's directions carefully and never oil any part of the tape player unit.
- o Always be sure that the tape is tightly wound on its reel before inserting in the player. Rotate a pencil in the drive sprockets to wind up any slack.

NOTE:

Look at a tape before you insert it. If the tape is loose, tighten it by turning one of the hubs with a pencil or your finger.

If the label is peeling off, do not put it in the drive mechanism.

Do not leave tapes sitting where they are exposed to hot, warm, or high humidity, such as on top of the dashboard or in the player.

If a tape is exposed to excessively hot or cold, let it reach a moderate temperature before putting it in the player.

DRIVING YOUR HYUNDAI

Engine Exhaust Can Be Dangerous! 2-2
Before Starting the Engine 2-3
Key Positions 2-3
Starting 2-5
Operating the Manual Transaxle 2-5
Operating the Automatic Transaxle 2-8
Anti-Lock Brake System (ABS) 2-12
Electronic Stabilty Program (ESP) 2-13
Good Braking Practices 2-15
Driving for Economy 2-16
Smooth Cornering 2-17
Winter Driving 2-17
Trailer or Vehicle Towing 2-21

C010A01O-AAT

WARNING: ENGINE EXHAUST CAN BE DANGEROUS!

Engine exhaust fumes can be extremely dangerous. If, at any time, you smell exhaust fumes inside the vehicle, open the windows immediately.

o Do not inhale exhaust fumes.
Exhaust fumes contain carbon monoxide, a colorless, odorless gas that can cause unconsciousness and death by asphyxiation.

o Be sure the exhaust system does not leak.
The exhaust system should be checked whenever the vehicle is raised to change the oil or for any other purpose. If you hear a change in the sound of the exhaust or if you drive over something that strikes the underneath side of the car, have the exhaust system checked as soon as possible by your Hyundai dealer.

o Do not run the engine in an enclosed area.
Letting the engine idle in your garage, even with the garage door open, is a hazardous practice. Never run the engine in your garage any longer than it takes to start the engine and back the car out.

o Avoid idling the engine for prolonged periods with people inside the car.
If it is necessary to idle the engine for a prolonged period with people inside the car, be sure to do so only in an open area with the air intake set at "Fresh" and the fan operating at one of the higher speeds so fresh air is drawn into the interior.

If you must drive with the tail gate open because you are carrying objects that make this necessary:

1. Close all windows.
2. Open side vents.
3. Set the air intake control at "Fresh", the air flow control at "Floor" or "Face" and the fan at one of the higher speeds.

To assure proper operation of the ventilation system, be sure the ventilation air intakes located just in front of the windshield are kept clear of snow, ice, leaves or other obstructions.

BEFORE STARTING THE ENGINE

C020A02A-AAT

Before you start the engine, you should always:

1. Look around the vehicle to be sure there are no flat tires, puddles of oil, water or other indications of possible trouble.
2. After entering the car, check to be sure the parking brake is engaged.
3. Check that all windows, and lights are clean.
4. Check that the interior and exterior mirrors are clean and in position.
5. Check your seat, seatback and headrest to be sure they are in their proper positions.
6. Close all the doors.
7. Fasten your seat belt and be sure that all other occupants have fastened theirs.
8. Turn off all lights and accessories that are not needed.
9. When you turn the ignition switch to "ON", check that all appropriate warning lights are operating and that you have sufficient fuel.
10. Check the operation of warning lights and all bulbs when key is in the "ON" position.

WARNING:
Always wear appropriate shoes when operating your vehicle.
Unsuitable shoes (high heels, ski boots, etc.) may interfere with your ability to use the brake and accelerator pedal, and the clutch (if installed).

TO START THE ENGINE

C030A01A-GAT

COMBINATION IGNITION SWITCH

- If your Hyundai is equipped with a manual transaxle, place the shift lever in neutral and depress the clutch pedal fully.
- If your Hyundai has an automatic transaxle, place the shift lever in "P" (park).
- To start the engine, insert the ignition key and turn it to the "START" position. Release it as soon as the engine starts. Do not hold the key in the "START" position for more than 15 seconds.

NOTE:
For safety, the engine will not start if the shift lever is not in "P" or "N" Position (Automatic Transaxle).

KEY POSITIONS

C040A01A-AAT

WARNING:
The engine should not be turned off or the key removed from the ignition key cylinder while the vehicle is in motion. The steering wheel is locked by removing the key.

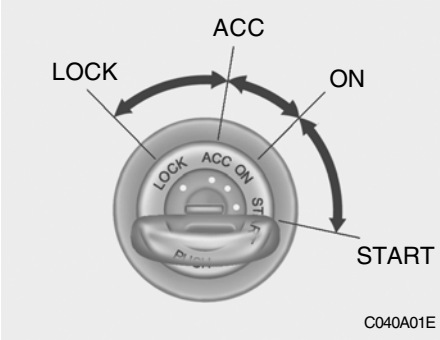

o "START"
The engine is started in this position. It will crank until you release the key.

NOTE:
Do not hold the key in the "START" position for more than 15 seconds.

o "ON"
When the key is in the "ON" position, the ignition is on and all accessories may be turned on. If the engine is not running, the key should not be left in the "ON" position. This will discharge the battery and may also damage the ignition system.

o "ACC"
With the key in the "ACC" position, some electrical accessories (radio, etc.) may be operated.

o "LOCK"
The key can be removed or inserted in this position.
To protect against theft, the steering wheel locks by removing the key.

NOTE:
If difficulty is experienced in turning the ignition key to the START position, turn the steering wheel right and left to release the tension and then turn the key.

C070C01A-AAT

To remove the ignition key

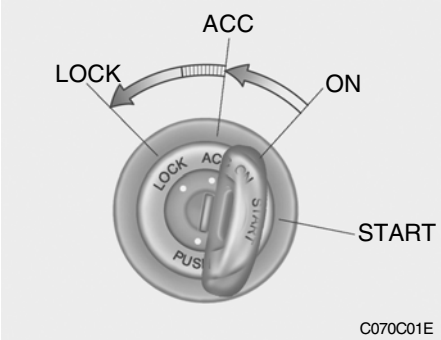

1. Turn the ignition key to the "ACC" position.
2. Simultaneously push and turn the ignition key counterclockwise from the "ACC" position to the "LOCK" position.
3. The key can be removed in the "LOCK" position.

STARTING

C050A01A-AAT

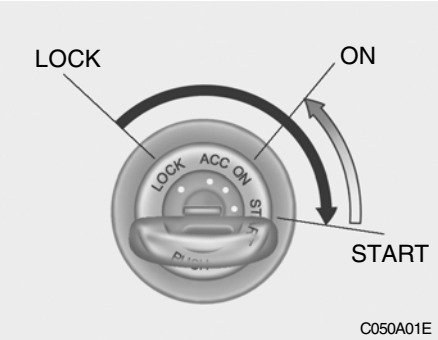

WARNING:
Never run the engine in a closed or poorly ventilated area any longer than is needed to move your car in or out of the area. The carbon monoxide gas emitted is odorless and can cause serious injury or death.

C050B01A-GAT

Normal Conditions:

The Starting Procedure:

1. Insert key, and fasten the seat belt.
2. Depress the clutch pedal fully and place the gearshift lever (manual transaxle) in neutral or the selector lever (automatic transaxle) in "P" (park) position.
3. After turning the ignition key to the "ON" position, make certain all warning lights and gauges are functioning properly before starting the engine.

WARNING:
Be sure that the clutch is fully depressed when starting a manual transaxle vehicle. Otherwise, there is the potential to cause damage to the vehicle or injury to someone inside or outside the vehicle as a result of the forward or backward movement of the vehicle that will occur if the clutch is not depressed when the vehicle is started.

4. Turn the ignition key to the "Start" position and release it when the engine starts.

OPERATING THE MANUAL TRANSAXLE

C070A01GK-AAT

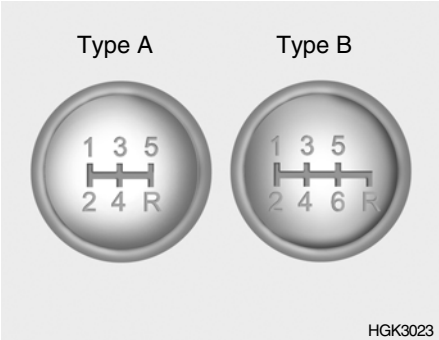

Your Hyundai's manual transaxle has a conventional shift pattern. This shift pattern is imprinted on the shift knob. The transaxle is fully synchronized in all forward gears so shifting to either a higher or a lower gear is easily accomplished.

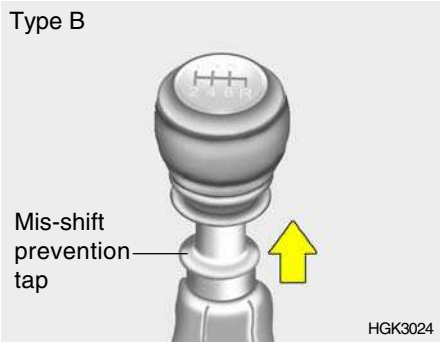

When shifting into reverse gear, pull the mis-shift prevention tab and shift into reverse gear position. (Type B: 6 speed type)

NOTE:

- **To shift into reverse, rest the lever in neutral for at least 3 seconds after your car is completely stopped. Then move the lever into the reverse position.**
- **During cold weather, shifting may be difficult until the transaxle lubricant has warmed up. This is normal and not harmful to the transaxle.**
- **If you 've come to a complete stop and it's hard to shift into 1st or R(Reverse), put the shift lever in N(Neutral) position and release the clutch. Press the clutch pedal back down, and then shift into 1st or R(Reverse) gear position.**
- **Do not use the shift lever as a handrest during driving, as this can result in premature wear of the transaxle shift forks.**

CAUTION:

When downshifting from fifth gear to fourth gear, caution should be taken not to inadvertently press the gear shift lever sideways in such a manner that second gear is engaged. Such a drastic downshift may cause the engine speed to increase to the point that the tachometer will enter the red zone. Such over-revving of the engine may possibly cause engine damage.

C070B01A-AAT

Using the Clutch

The clutch should be pressed all the way to the floor before shifting, then released slowly. The clutch pedal should always be used after fully returning to the original position. Do not rest your foot on the clutch pedal while driving. This can cause unnecessary wear. Do not partially engage the clutch to hold the car on an incline. This causes unnecessary wear. Use the parking brake to hold the car on an incline. Do not operate the clutch pedal rapidly and repeatedly.

C070D03A-AAT

Good Driving Practices

- o Never take the car out of gear and coast down a hill. This is extremely hazardous. Always leave the car in gear.
- o Don't "ride" the brakes. This can cause them to overheat and malfunction. Instead, when you are driving down a long hill, slow down and shift to a lower gear. When you do this, engine braking will help slow the car.
- o Slow down before shifting to a lower gear. This will help avoid over-revving the engine, which can cause damage.
- o Slow down when you encounter cross winds. This gives you much better control of your car.
- o Be sure the car is completely stopped before you attempt to shift into reverse. The transaxle can be damaged if you do not. To shift into reverse, depress the clutch, move the shift lever to neutral, wait three seconds, then shift to the reverse position.
- o Exercise extreme caution when driving on a slippery surface. Be especially careful when braking, accelerating or shifting gears. On a slippery surface, an abrupt change in vehicle speed can cause the drive wheels to lose traction and the vehicle to go out of control.

WARNING:

- **o Avoid high cornering speeds.**
- **o Do not make quick steering wheel movements, such as sharp lane changes or fast, sharp turns.**
- **o Always wear your seat belts. In a collision crash, un unbelted person is significantly more likely to die than a person wearing a seatbelt.**
- **o The risk of rollover is greatly increased if you lose control of your vehicle at highway speeds.**
- **o Loss of control often occurs if two or more wheels drop off the roadway and the driver oversteers to reenter the roadway.**

- **o In the event your vehicle leaves the roadway, do not steer sharply. Instead, slow down before pulling back into the travel lanes.**
- **o Never exceed posted speed limits.**

C070E01GK-GAT

Recommended Shift Points

The shift points as shown below are recommended for optimum fuel economy and performance.

A Type (5 speed)

Shift from-to	Recommended
1-2	20 km/h (15 mph)
2-3	40 km/h (25 mph)
3-4	55 km/h (35 mph)
4-5	75 km/h (45 mph)

B Type (6 speed)

Shift from-to	Recommended
1-2	15 km/h (10 mph)
2-3	35 km/h (20 mph)
3-4	50 km/h (30 mph)
4-5	70 km/h (45 mph)
5-6	95 km/h (60 mph)

OPERATING THE AUTOMATIC TRANSAXLE

C090A03Y-GAT

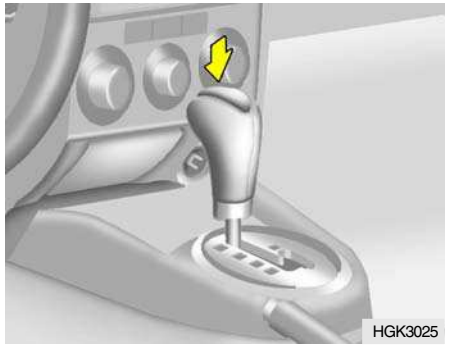
HGK3025

The highly efficient Hyundai automatic transaxle has four forward speeds and one reverse speed. The individual speeds are selected automatically, depending on the position of the speed selector lever. The selector lever has 2 gates; the main gate and the manual gate.

NOTE:
For information on manual gate operation, refer to "Sports Mode".

In the main gate, the selector lever has 4 positions, and is equipped with a button to avoid inadvertent wrong selection.

The first few shifts on a new vehicle, or if the battery has been disconnected, may be somewhat abrupt. This is a normal condition, and the shifting sequence will adjust after shifts are cycled a few times by the T.C.M (Transaxle Control Module).

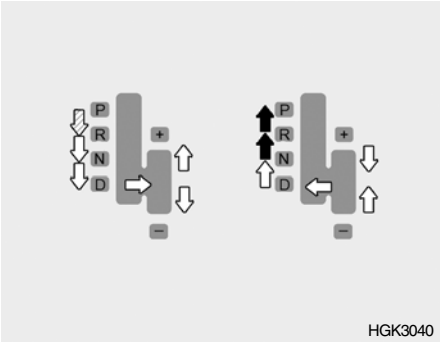

HGK3040

CAUTION:
Never shift into "R" or "P" position while the vehicle is moving.

NOTE:

- **Depress the brake pedal and push the button when shifting.**
- **Push the button when shifting.**
- **The selector lever can be shifted freely.**

The indicator lights in the instrument cluster indicate the selector lever position when the ignition is switched "ON". During "D" or sports mode operation, the gear currently in use displays in the numeral indicator.

C090B01A-AAT

The function of each position is as follows:

o P (Park):

Use to hold the vehicle in place when parked or while starting the engine. Whenever parking the car, apply the parking brake and shift the selector lever to the "P" (Park) position.

CAUTION:

Never place the selector lever in the "P" (Park) position unless the vehicle is fully stopped. Failure to observe this caution will cause severe damage to the transaxle.

C090C01A-AAT

o R (Reverse):

Use for backing up the vehicle. Bring the car to a complete stop before shifting the selector lever to "R" position.

C090D02O-AAT

o N (Neutral):

In the "N" position, the transaxle is in neutral, which means that no gears are engaged. The engine can be started with the shift lever in "N" position, although this is not recommended except if the engine stalls while the car is moving.

C090E01O-AAT

o D (Drive):

Use for normal driving. The transaxle will automatically shift through a four gear sequence.

C090F02GK-GAT

Sports Mode

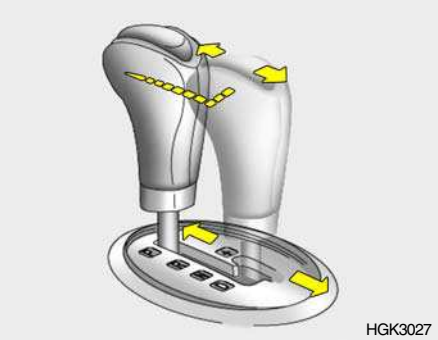

Whether the vehicle is stationary or in motion, sports mode is selected by pushing the selector lever from the "D" position into the manual gate. To return to "D" range operation, push the selector lever back into the main gate. In sports mode, moving the selector lever backwards and forwards can make rapid gearshifts simple. In contrast to a manual transaxle, the sports mode allows gearshifts with the accelerator pedal depressed.

UP (+) : Push the lever forward once to shift up one gear.
DOWN (-) : Pull the lever backwards once to shift down one gear.

CAUTION:

- **In sports mode, the driver must execute shifts in accordance with prevailing road conditions, taking care to keep the engine speed below the red zone.**
- **For engine protection, upward shifts are made automatically when the engine rpm reaches the red zone.**
- **By rapidly moving the selector lever backwards (-) twice it is possible to skip one gear by using the sports mode. Since sudden engine braking and/or rapid acceleration can cause a loss of traction, however, downshifts must be made carefully in accordance with the vehicle's speed.**

NOTE:

- **In sports mode, only the four forward gears can be selected. To reverse or park the vehicle, move the selector lever to the "R" or "P" position as required.**
- **In sports mode, downward shifts are made automatically when the vehicle slows down. When the vehicle stops, 1st gear is automatically selected.**
- **To maintain the required levels of vehicle performance and safety, the system may not execute certain gearshifts when the selector lever is operated.**
- **Before driving away from a stop on a slippery road, push the selector lever forward into the +(UP) position. This causes the transaxle to shift into 2nd gear which is better for smooth driving away on a slippery road. Push the selector lever to the -(DOWN) side to shift back to 1st gear.**

C090H01L-GAT

NOTE:

- **For smooth and safe operation, depress the brake pedal when shifting from "Neutral" position or "Park" position to a forward or reverse gear.**
- **The ignition key must be in the "ON" position and the brake pedal fully depressed in order to move the shift lever from the "P" (Park) position to any of the other positions.**
- **It is always possible to shift from "R", "N", "D" position to "P" position. The vehicle must be fully stopped to avoid transaxle damage.**

C090I03L-GAT

CAUTION:

- **Shift into "R" and "P" position only when the vehicle has completely stopped.**
- **Do not accelerate the engine in reverse or any of the forward positions with the brakes applied.**
- **Always apply the footbrake when shifting from "P" or "N", to "R", "D"position.**
- **Do not use the "P" (Park) position in place of the parking brake. Always set the parking brake, shift the transaxle into "P" (Park) position and turn off the ignition when you leave the vehicle, even momentarily. Never leave the vehicle unattended while the engine is running.**
- **When accelerating from a stop on a steep hill, the vehicle may have a tendency to roll backwards. Shifting the shift lever into 2nd gear while in Sport mode will help prevent the vehicle from rolling backwards.**
- **Check the automatic transaxle fluid level regularly, and add fluid as necessary.**
- **See the maintenance schedule for the proper fluid recommendation.**

C090N04O-AAT

Good Driving Practices

- Never move the gear selector lever from "P" or "N" to any other position with the accelerator pedal depressed.
- Never move the gear selector lever into "P" when the vehicle is in motion.
- Be sure the car is completely stopped before you attempt to shift into "R".
- Never take the car out of gear and coast down a hill. This may be extremely hazardous. Always leave the car in gear when moving.
- Do not "ride" the brakes. This can cause them to overheat and malfunction. Instead, when you are driving down a long hill, slow down and shift to a lower gear. When you do this, engine braking will help slow the car.

- o Slow down before shifting to a lower gear. Otherwise, the lower gear may not be engaged.
- o Always use the parking brake. Do not depend on placing the transaxle in "P" to keep the car from moving.
- o Exercise extreme caution when driving on a slippery surface. Be especially careful when braking, accelerating or shifting gears. On a slippery surface, an abrupt change in vehicle speed can cause the drive wheels to lose traction and the vehicle to go out of control.
- o Optimum vehicle performance and economy is obtained by smoothly depressing and releasing the accelerator pedal.

WARNING:

- **o Avoid high cornering speeds.**
- **o Do not make quick steering wheel movements, such as sharp lane changes or fast, sharp turns.**
- **o Always wear your seat belts. In a collision crash, un unbelted person is significantly more likely to die than a person wearing a seatbelt.**
- **o The risk of rollover is greatly increased if you lose control of your vehicle at highway speeds.**
- **o Loss of control often occurs if two or more wheels drop off the roadway and the driver oversteers to reenter the roadway.**
- **o In the event your vehicle leaves the roadway, do not steer sharply. Instead, slow down before pulling back into the travel lanes.**
- **o Never exceed posted speed limits.**
- **o If your vehicle becomes stuck in snow, mud, sand, etc., then you may attempt to rock the vehicle free by moving it forward and backward. Do not attempt this procedure if people or objects are anywhere near the vehicle. During the rocking operation the vehicle may suddenly move forward of backward as it becomes unstuck, causing injury or damage to nearby people or objects.**

ANTI-LOCK BRAKE SYSTEM (ABS)

C120A03A-AAT

(If Installed)

The Anti-Lock Brake System (ABS) is designed to prevent wheel lock-up during sudden braking or on hazardous road surfaces. The ABS control module monitors the wheel speed and controls the pressure applied to each brake. Thus, in emergency situations or on slick roads, ABS will increase vehicle control during braking.

NOTE:

- **o A click sound may be heard in the engine compartment when the vehicle begins to move after the engine is started. These conditions are normal and indicate that the anti-lock brake system (Electronic Stability Program) is functioning properly.**
- **o During ABS (ESP) operation, a slight pulsation may be felt in the brake pedal when the brakes are applied. Also, a noise may be heard in the engine compartment while braking. These conditions are normal and indicate that the anti-lock brake system is functioning properly.**

WARNING:
Your ABS (ESP) will not prevent accidents due to improper or dangerous driving maneuvers. Even though vehicle control is improved during emergency braking, always maintain a safe distance between you and objects ahead. Vehicle speeds should always be reduced during extreme road conditions.
The braking distance for cars equipped with an anti-lock braking system may be longer than for those without it in the following road conditions.
During these conditions the vehicle should be driven at reduced speeds.

- **Rough, gravel or snow-covered roads.**
- **With tire chains installed.**
- **Roads where the road surface is pitted or has different surface height.**

The safety features of an ABS (ESP) equipped vehicle should not be tested by high speed driving or cornering. This could endanger the safety of yourself or others.

ELECTRONIC STABILITY PROGRAM (ESP)

C310A01JM-AAT

(If installed)

The Electronic Stability Program (ESP) system is designed to stabilize the vehicle during cornering manuevers. ESP checks where you are steering and where the vehicle is actually going. ESP applies the brakes at individual wheels and intervenes in the engine management system to stabilize the vehicle.

The Electronic Stability Program (ESP) system is an electronic system designed to help the driver maintain vehicle control under adverse conditions. It is not a substitute for safe driving practices.

Factors including speed, road conditions and driver steering input can all affect whether ESP will be effective in preventing a loss of control. It is still your responsibility to drive and corner at reasonable speeds and to leave a sufficient margin of safety.

CAUTION:
Driving with varying tire or wheel size may cause the ESP system to malfunction. When replacing tires, make sure they are the same size as your original tires.

WARNING:
Electronic stability program is only a driving aid; all normal precautions for driving in inclement weather and on slippery road surfaces should be observed.

C310B01JM-AAT

ESP ON/OFF Mode

When the ESP is operating, the ESP indicator in the instrument cluster will blink.
If you turn the system off by pressing the ESP switch, the ESP-OFF indicator will come on and stay on. In the ESP-OFF mode, the stability control will be deactivated. Adjust your driving accordingly. To turn the system back on, press the switch again. The ESP-OFF indicator should go off.

NOTE:
The ESP mode will automatically be turned ON after the engine is turned off and restarted.

C310D01JM-AAT

Indicators and Warning

The indicators should illuminate when the ignition key is turned to ON or START but should go out after three seconds.
If the indicators do not illuminate, or the ESP or ESP-OFF indicator does not go out after 3 seconds, have the vehicle checked by an authorized dealer.

Should there be any unusual conditions in the device while driving, ESP-OFF indicator illuminates as a warning.
If ESP-OFF indicator illuminates, pull your car to a safe place and stop the engine.
Then, start the engine again to check if the ESP-OFF indicator goes out.

If the indicator remains lit even after the engine has been started, have your car checked by an authorized Hyundai dealer.

GOOD BRAKING PRACTICES

C130A01A-AAT

WARNING:
Nothing should be carried on top of the shelf panel behind the rear seat. If there were an accident or a sudden stop, such objects could move forward and cause damage to the vehicle or injure the occupants.

- After being parked, check to be sure the parking brake is not engaged and that the parking brake indicator light is out before driving away.
- Driving through water may get the brakes wet. They can also get wet when the car is washed. Wet brakes can be dangerous! Your car will not stop as quickly if the brakes are wet. Wet brakes cause the car to pull to one side. To dry the brakes, apply the brakes lightly until the braking action returns to normal, taking care to keep the car under control at all times. If the braking action does not return to normal, stop as soon as it is safe to do so and call your Hyundai dealer for assistance.
- Don't coast down hills with the car out of gear. This is extremely hazardous. Keep the car in gear at all times, use the brakes to slow down, then shift to a lower gear so that engine braking will help you maintain a safe speed.
- Don't "ride" the brake pedal. Resting your foot on the brake pedal while driving can be dangerous because it can result in the brakes overheating and losing their effectiveness. It also increases the wear of the brake components.
- If a tire goes flat while you are driving, apply the brakes gently and keep the car pointed straight ahead while you slow down. When you are moving slowly enough for it to be safe to do so, pull off the road and stop in a safe place.
- If your car is equipped with an automatic transaxle, don't let your car creep forward. To avoid creeping forward, keep your foot on the brake pedal when the car is stopped.
- Use caution when parking on a hill. Engage the parking brake and place the gear selector lever in "P" (automatic transaxle) or in first or reverse gear (manual transaxle). If your car is facing downhill, turn the front wheels into the curb to help keep the car from rolling. If your car is facing uphill, turn the front wheels away from the curb to help keep the car from rolling.
  If there is no curb or if it is required by other conditions to keep the car from rolling, block the wheels.
- Under some conditions your parking brake can freeze in the engaged position. This is most likely to happen when there is an accumulation of snow or ice around or near the rear brakes or if the brakes are wet. If there is a risk that the parking brake may freeze, apply it only temporarily while you put the gear selector lever in "P" (automatic) or in first or reverse gear (manual transaxle) and block the rear wheels so the car cannot roll. Then release the parking brake.
- Do not hold the vehicle on the upgrade with the accelerator pedal. This can cause the transmission to overheat. Always use the brake pedal or parking brake.

DRIVING FOR ECONOMY

C140A01A-GAT

You can save fuel and get more kilometers from your car if you follow these suggestions:

- o Drive smoothly. Accelerate at a moderate rate. Don't make "jack-rabbit" starts or full-throttle shifts and maintain a steady cruising speed. Don't race between stop-lights. Try to adjust your speed to that of the other traffic so you don't have to change speeds unnecessarily. Avoid heavy traffic whenever possible.
  Always maintain a safe distance from other vehicles so you can avoid unnecessary braking. This also reduces brake wear.
- o Drive at a moderate speed. The faster you drive, the more fuel your car uses. Driving at a moderate speed, especially on the highway, is one of the most effective ways to reduce fuel consumption.
- o Don't "ride" the brake or clutch pedal. This can increase fuel consumption and also increase wear on these components. In addition, driving with your foot resting on the brake pedal may cause the brakes to overheat, which reduces their effectiveness and may lead to more serious consequences.
- o Take care of your tires. Keep them inflated to the recommended pressure. Incorrect inflation, either too much or too little, results in unnecessary tire wear. Check the tire pressures at least once a month.
- o Be sure that the wheels are aligned correctly. Improper alignment can result from hitting curbs or driving too fast over irregular surfaces. Poor alignment causes faster tire wear and may also result in other problems as well as greater fuel consumption.
- o Keep your car in good condition. For better fuel economy and reduced maintenance costs, maintain your car in accordance with the maintenance schedule in Section 5. If you drive your car in severe conditions, more frequent maintenance is required (see Section 5 for details).
- o Keep your car clean. For maximum service, your Hyundai should be kept clean and free of corrosive materials. It is especially important that mud, dirt, ice, etc. not be allowed to accumulate on the underside of the car. This extra weight can result in increased fuel consumption and also contribute to corrosion.
- o Travel lightly. Don't carry unnecessary weight in your car. Weight reduces fuel economy.
- o Don't let the engine idle longer than necessary. If you are waiting (and not in traffic), turn off your engine and restart only when you're ready to go.
- o Remember, your Hyundai does not require extended warm-up. As soon as the engine is running smoothly, you can drive away. In very cold weather, however, give your engine a slightly longer warm-up period.

- o Don't "lug" or "over-rev" the engine. Lugging is driving too slowly in too high a gear resulting in the engine bucking. If this happens, shift to a lower gear. Over-revving is racing the engine beyond its safe limit. This can be avoided by shifting at the recommended speeds.
- o Use your air conditioning sparingly. The air conditioning system is operated by engine power so your fuel economy is reduced when you use it.

SMOOTH CORNERING

C150A01A-AAT

Avoid braking or gear changing in corners, especially when roads are wet. Ideally, corners should always be taken under gentle acceleration. If you follow these suggestions, tire wear will be held to a minimum.

WINTER DRIVING

C160A01A-AAT

The more severe weather conditions of winter result in greater wear and other problems. To minimize the problems of winter driving, you should follow these suggestions:

C160B01A-GAT

Snowy or Icy Conditions

To drive your vehicle in deep snow, it may be necessary to use snow tires or to install tire chains on your tires. If snow tires are needed, it is necessary to select tires equivalent in size and type to the original equipment tires. Failure to do so may adversely affect the safety and handling of your car. Speeding, rapid acceleration, sudden brake applications, and sharp turns are potentially very hazardous practices. During deceleration, use engine braking to the fullest extent. Sudden brake applications on snowy or icy roads may cause skids to occur. You need to keep sufficient distance between the vehicle in front and your vehicle. Also, apply the brake gently. It should be noted that installing tire chains on the tire will provide a greater driving force, but will not prevent side skids.

NOTE:
Tire chains are not legal in all provinces. Check province laws before fitting tire chains.

C160C01A-AAT

Use High Quality Ethylene Glycol Coolant

Your Hyundai is delivered with high quality ethylene glycol coolant in the cooling system. It is the only type of coolant that should be used because it helps prevent corrosion in the cooling system, lubricates the water pump and prevents freezing. Be sure to replace or replenish your coolant in accordance with the maintenance schedule in Section 5. Before winter, have your coolant tested to assure that its freezing point is sufficient for the temperatures anticipated during the winter.

C160D01A-AAT

Check Battery and Cables

Winter puts additional burdens on the battery system. Visually inspect the battery and cables as described in Section 6. The level of charge in your battery can be checked
by your Hyundai dealer or a service station.

C160E01A-AAT

Change to "Winter Weight" Oil if Necessary

In some climates it is recommended that a lower viscosity "winter weight" oil be used during cold weather. See Section 9 for recommendations. If you aren't sure what weight oil you should use, consult your Hyundai dealer.

C160G01A-GAT

To Keep Locks from Freezing

To keep the locks from freezing, squirt an approved de-icer fluid or glycerine into the key opening. If a lock is covered with ice, squirt it with an approved de-icing fluid to remove the ice. If the lock is frozen internally, you may be able to thaw it out by using a heated key. Handle the heated key with care to avoid injury.

NOTE:
The proper temperature for using the immobilizer key is from -40°C to 80°C. If you heat the immobilizer key over 80°C to open the frozen lock, it may cause damage to the transponder in its head.

C160H01A-AAT

Use Approved Anti-Freeze in Window Washer System

To keep the water in the window washer system from freezing, add an approved anti-freeze solution in accordance with instructions on the container. Window washer anti-freeze is available from Hyundai dealers and most auto parts outlets. Do not use engine coolant or other types of anti-freeze as these may damage the finish.

C160I01A-AAT

Don't Let Your Parking Brake Freeze

Under some conditions your parking brake can freeze in the engaged position. This is most likely to happen when there is an accumulation of snow or ice around or near the rear brakes or if the brakes are wet. If there is a risk the parking brake may freeze, apply it only temporarily while you put the gear selector lever in "P" (automatic) or in first or reverse gear (manual transaxle) and block the rear wheels so the car cannot roll. Then release the parking brake.

C160J01A-AAT

Don't Let Ice and Snow Accumulate Underneath

Under some conditions, snow and ice can build up under the fenders and interfere with the steering. When driving in severe winter conditions where this may happen, you should periodically check underneath the car to be sure the movement of the front wheels and the steering components is not obstructed.

C160K01A-AAT

Carry Emergency Equipment

Depending on the severity of the weather where you drive your car, you should carry appropriate emergency equipment. Some of the items you may want to carry include tire chains, tow straps or chains, flashlight, emergency flares, sand, a shovel, jumper cables, a window scraper, gloves, ground cloth, coveralls, a blanket, etc.

HIGHER SPEED MOTORING

C170A01A-AAT

Pre-Trip Inspections

1. Tires:

Adjust the tire inflation pressures to specification. Low tire inflation pressures will result in overheating and possible failure of the tires.
Avoid using worn or damaged tires which may result in reduced traction or tire failure.

NOTE:

Never exceed the maximum tire inflation pressure shown on the tires.

2. Fuel, engine coolant and engine oil:

High speed travel consumes more fuel than urban motoring. Do not forget to check both engine coolant and engine oil.

3. Drive belt:

A loose or damaged drive belt may result in overheating of the engine.

USE OF LIGHTS

C180A01A-AAT

Check your lights regularly for correct operation and always keep them clean. When driving during the day in conditions of poor visibility, it is helpful to drive with headlights on low beam. This enables you to be seen as well as to see.

TRAILER OR VEHICLE TOWING

C190A01A-GAT

If you are considering towing with your car, you should first check with your Province Department of Motor Vehicles to determine their legal requirements. Since laws vary from province to province, the requirements for towing trailers, cars, other types of vehicles, or apparatus may differ. Ask your Hyundai dealer for further details before towing.

CAUTION

Do not do any towing with your car during its first 2,000 km (1,200 miles) in order to allow the engine to properly break in. Failure to heed this caution may result in serious engine or transaxle damage.

C190B01S-AAT

Trailer Hitches

Select the proper hitch and ball combination, making sure that it's location is compatible with that of the trailer or vehicle being towed.
Use a quality non-equalizing hitch which distributes the tongue load uniformly throughout the chassis.

The hitch should be bolted securely to the car and installed by a qualified technician. DO NOT USE A HITCH DESIGNED FOR TEMPORARY INSTALLATION AND NEVER USE ONE THAT ATTACHES ONLY TO THE BUMPER.

C190C03Y-GAT

Trailer Brakes

If your trailer is equipped with a braking system, make sure it conforms to federal and/or local regulations and that it is properly installed and operating correctly.

NOTE:

If you tow a trailer or vehicle, your car will require more frequent maintenance due to the additional load. See "Maintenance Under Severe Usage Conditions" on page 5-7.

CAUTION:

- **Never connect a trailer brake system directly to the vehicle brake system.**
- **When towing a trailer on steep grades (in excess of 6%) pay close attention to the engine coolant temperature gauge to ensure the engine does not overheat. If the needle of the coolant temperature**

gauge moves across the dial towards "H" (HOT), pull over and stop as soon as it is safe to do so, and allow the engine to idle until it cools down. You may proceed once the engine has cooled sufficiently.

C190D01A-GAT

Safety Chains

Should the hitch connection between your car and the trailer or vehicle you are towing fail, the trailer or vehicle could wander dangerously across other lanes of traffic and ultimately collide with another vehicle. To eliminate this potentially dangerous situation, safety chains, attached between your car and the trailer or towed vehicle, are required in most provinces.

C190E01GK-GAT

Trailer Weight Limit

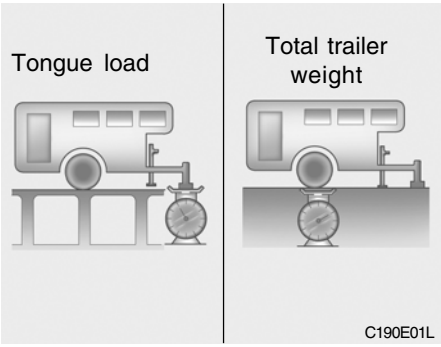

Tongue loads can be increased or decreased by redistributing the load in the trailer. This can be verified by checking the total weight of the loaded trailer and then checking the load on the tongue.

NOTE:

1. **Never load the trailer with more weight in the back than in the front. About 60% of the trailer load should be in the front half on the trailer and the remaining 40% in the rear.**

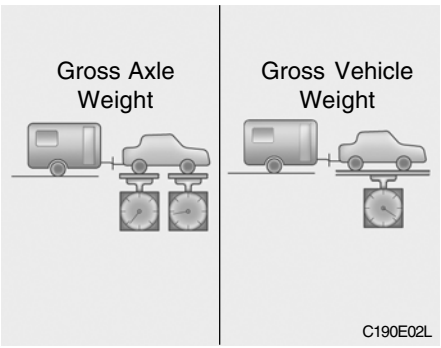

2. **The total gross vehicle weight with trailer must not exceed the Gross Vehicle Weight Rating (GVWR) shown on the vehicle identification plate (see page 8-2). The total gross vehicle weight is the combined weight of the vehicle, driver, all passengers and their luggage, cargo, hitch, trailer tongue load and other optional equipment.**

3. **The front or rear axle weight must not exceed the Gross Axle Weight Rating (GAWR) shown on the vehicle identification plate (see page 8-2). It is possible that your towing package does not exceed the GVWR but exceeds the GAWR. Improper trailer loading and/or too much luggage in the trunk can overload the rear axle. Redistribute the load and check the axle weight again.**
4. **The maximum permissible static vertical load on the coupling device:**

1.6 L	50kg
2.0/2.7 L	60kg

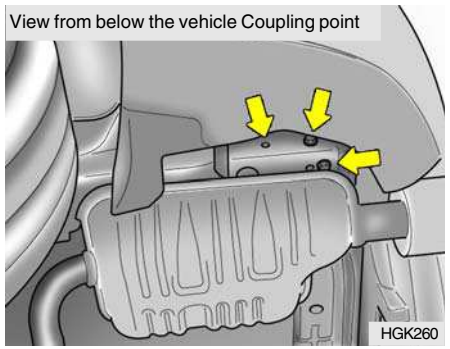

5. **The maximum permissible overhang of the coupling point : 990 mm.**

CAUTION:
The following specifications are recommended when towing a trailer. The loaded trailer weight cannot safely exceed the values in the following chart.

Kg

		Maximum Towable Weight Trailer
Without Brake Type		550
With Brake Type	1.6 L	1,200
	2.0/2.7 L	1,400

WARNING:
Improperly loading your car and trailer can seriously affect its steering and braking performance causing a crash which you may be serious injury or death.

C190F01A-GAT

Trailer or Vehicle Towing Tips

1. Before towing, check hitch and safety chain connections as well as proper operation of the trailer running lights, brake lights, and turn signals.
2. Always drive your vehicle at a moderate speed (Less than 100 km/H).
3. Trailer towing requires more fuel than normal conditions.
4. To maintain engine braking efficiency and electrical chaarging performance, do not use fifth gear (manual transaxle) or overdrive (automatic transaxle).
5. Always secure items in the trailer to prevent load shift while driving.
6. Check the condition and air pressure of all tires on the trailer and your car. Low tire pressure can seriously affect the handling. Also check the spare tire.
7. The vehicle/trailer combination is more affected by crosswind and buffeting.
   When being passed by a large vehicle, keep a constant speed and steer straight ahead. If there is too much wind buffeting, slow down to get out of the other vehicle's air turbulence.
8. When parking your car and trailer, especially on a hill, be sure to follow all the normal precautions. Turn your front wheel into the curb, set the parking brake firmly, and put the transmission in 1st or Reverse (manual) or Park (automatic). In addition, place wheel chocks at each of the trailer's tires.
9. If the trailer has electric brakes, start your vehicle and trailer moving, and then apply the trailer brake controller by hand to be sure the brakes are working. This lets you check your electrical connection at the same time.
10. During your trip, check occasionally to be sure that the load is secure, and that the lights and any trailer brakes are still working.
11. Avoid jerky starts, sudden acceleration or sudden stops.
12. Avoid sharp turns and rapid lane changes.
13. Avoid holding the brake pedal down too long or too frequently. This could cause the brakes to overheat, resulting in reduced braking efficiency.
14. When going down a hill, shift into a lower gear and use the engine braking effect.
    When ascending a long grade, downshift the transmission to a lower gear and reduce speed to reduce chances of engine overloading and/or overheating.
15. If you have to stop while going uphill, do not hold the vehicle in place by pressing on the accelerator. This can cause the automatic transmission to overheat. Use the parking brake or footbrake.

NOTE:

When towing check transaxle fluid more frequently.

CAUTION:

If overheating should occur when towing, (temperature gauge reads near red zone), taking the following action may reduce or eliminate the problem.

1. **Turn off the air conditioner.**
2. **Reduce highway speed.**
3. **Select a lower gear when going uphill.**
4. **While in stop and go traffic, place the gear selector in park or neutral and idle the engine at a higher speed.**

WHAT TO DO IN AN EMERGENCY

If the Engine Will not Start 3-2
Jump Starting 3-3
If the Engine Overheats 3-4
Spare Tire 3-5
If You Have a Flat Tire 3-6
Changing a Flat Tire 3-6
Emergency Commodity 3-11
If Your Vehicle Must Be Towed 3-12
Emergency Towing 3-14
If You Lose Your Keys 3-15

3

2 IF THE ENGINE WILL NOT START

D010A01A-AAT

WARNING:
If the engine will not start, do not push or pull the car to start it. This could result in a collision or cause other damage. In addition, push or pull starting may cause the catalytic converter to be overloaded and create a fire hazard.

D010B02A-AAT

If Engine Doesn't Turn Over or Turns Over Slowly

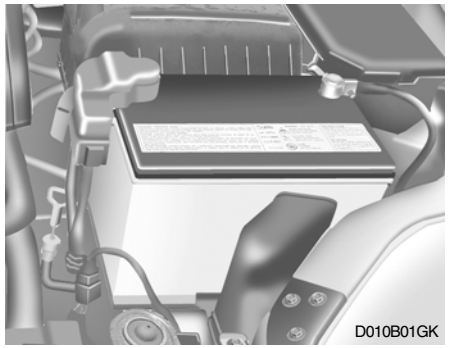

1. If your car has an automatic transaxle, be sure the gear selector lever is in "N" or "P" and the emergency brake is set.
2. Check the battery connections to be sure they are clean and tight.
3. Turn on the interior light. If the light dims or goes out when you operate the starter, the battery is discharged.
4. Check the starter connections to be sure they are securely tightened.
5. Do not push or pull the vehicle to start it. See instructions for "Jump Starting" on the following pages.

D010C01A-AAT

If Engine Turns Over Normally but Does Not Start

1. Check fuel level.
2. With the key in the off position, Check all connectors at ignition coils and spark plugs. Reconnect any that may be disconnected or loose.
3. Check the fuel line in the engine room.
4. If engine still refuses to start, call a Hyundai dealer or seek other qualified assistance.

D010D01A-AAT

If Engine Stalls While Driving

1. Reduce your speed gradually, keeping a straight line. Move cautiously off the road to a safe place.
2. Turn on your emergency flashers.
3. Try to start the engine again. If your vehicle will not start, contact a Hyundai dealer or seek other qualified assistance.

JUMP STARTING

D020A02A-AAT

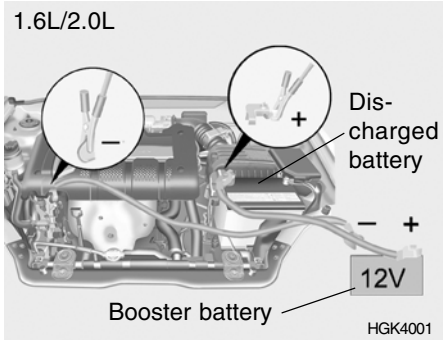

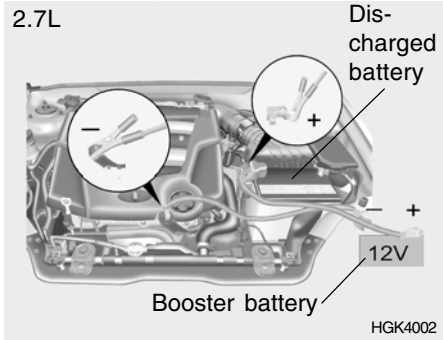

WARNING:
The gas produced by the battery during the jump-start operation is highly explosive. If these instructions are not followed exactly, serious personal injury and damage to the vehicle may occur! If you are not sure how to follow this procedure, seek qualified assistance. Automobile batteries contain sulfuric acid. This is poisonous and highly corrosive. When jump starting, wear protective glasses and be careful not to get acid on yourself, your clothing or on the car.

- o If you should accidentally get acid on your skin or in your eyes, immediately remove any contaminated clothing and flush the area with clear water for at least 15 minutes. Then promptly obtain medical attention. If you must be transported to an emergency facility, continue to apply water to the affected area with a sponge or cloth.
- o The gas produced by the battery during the jump-start operation is highly explosive. Do not smoke or allow a spark or open flame in the vicinity.
- o The battery being used to provide the jump start must be 12-volt. If you cannot determine that it is a 12-volt battery, do not attempt to use it for the jump start.
- o To jump start a car with a discharged battery, follow this procedure exactly:

1. If the booster battery is installed in another vehicle, be sure the two vehicles are not touching.
2. Turn off all unnecessary lights and accessories in both vehicles.
3. Attach the clamps of the jumper cable in the exact location shown on the previous page. First, attach one clamp of the jumper cable to the positive (+) post or cable of the discharged battery. Then attach the other end of the same cable to the positive (+) post or cable of the booster battery. Next, using the other cable, attach one clamp to the negative (-) post or cable of the

booster battery. Then attach the other end of that cable to a solid metal part of the engine away from the battery. Do not connect the cable to any moving part.

4. Start the engine in the car with the booster battery and let it run for a few minutes. This will help to assure that the booster battery is fully charged. During the jumping operation, run the engine in this vehicle at about 2000 rpm.
5. Start the engine in the car with the discharged battery using the normal starting procedure. After the engine starts, leave the jumper cables connected and let the engine run at fast idle or about 2000 rpm for several minutes.
6. carefully remove the jumper cables in the reverse order of attachment.

If you do not know why your battery became discharged (because the lights were left on, etc.), have the charging system checked by your Hyundai dealer.

IF THE ENGINE OVERHEATS

D030A02A-AAT

If your temperature gauge indicates overheating, you experience a loss of power, or hear loud pinging or knocking, the engine is probably too hot. If this happens to you, you should:

1. Pull off the road and stop as soon as it is safe to do so.
2. Place the gear selector lever in "P" (automatic), or neutral (manual transaxle) and set the parking brake. If the air conditioning is on, turn it off.
3. If engine coolant is running out under the car or steam is coming out from the hood, stop the engine. Do not open the hood until the engine coolant has stopped running or the steaming has stopped. If there is no visible loss of engine coolant and no steam, leave the engine running and check to be sure the engine cooling fan is operating. If the fan is not running, turn the engine off.
4. Check to see if the water pump drive belt is missing. If it is not missing, check to see that it is tight. If the drive belt seems to be satisfactory, check for engine coolant leaking from the radiator, hoses or under the car. (If the air conditioning had been in use, it is normal for cold water to be draining from it when you stop).

WARNING:
While the engine is running, keep hair, hands, and clothing away from moving parts such as the fan and drive belts to prevent injury.

5. If the water pump drive belt is broken or engine coolant is leaking out, stop the engine immediately and call the nearest Hyundai dealer for assistance.

WARNING:
Do not remove the radiator cap when the engine is hot. This can allow coolant to be blown out of the opening and cause serious burns.

6. If you cannot find the cause of the overheating, wait until the engine temperature has returned to normal. Then, if the engine coolant has been lost, carefully add coolant to the reservoir (page 6-10) to bring the fluid level in the reservoir up to the halfway mark.
7. Proceed with caution, keeping alert for further signs of overheating. If overheating happens again, call a Hyundai dealer for assistance.

CAUTION:
Serious loss of engine coolant indicates there is a leak in the cooling system and this should be checked as soon as possible by a Hyundai dealer.

TEMPORARY SPARE TIRE

D040A01GK-GAT

The following instructions for the temporary spare tire should be observed:

1. Check inflation pressure as soon as practical after installing the spare tire, and adjust to the specified pressure. The tire pressure should be periodically checked and maintained at the specified pressure while the tire is stored.

Spare Tire Pressure

Tire Size	T125/70R 16
Inflation Pressure	420 kPa (60 psi)

2. The spare tire should only be used temporarily and should be returned to the luggage compartment as soon as the original tire can be repaired or replaced.
3. Continuous use at speeds of over 80 km/h (50 mph) is not recommended.
4. As the temporary spare tire is specifically designed for your car, it should not be used on any other vehicle.
5. The temporary spare tire should not be used on any other wheels, nor should standard tires, snow tires, wheel covers or trim rings be used with the temporary spare wheel. If such use is attempted, damage to these items or other car components may occur.
6. The temporary spare tire pressure should be checked once a month while the tire is stored.

CAUTION:
- **Do not use snow chains with your temporary spare tire.**
- **Do not use more than one temporary spare tire at a time.**

D040B01A-AAT

Handling the Spare Tire

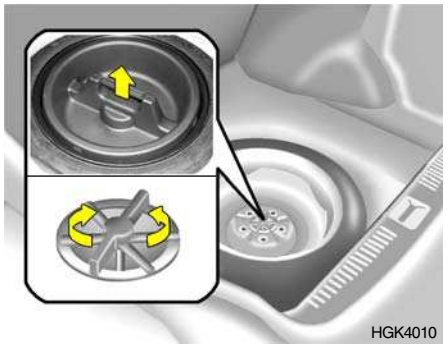

Remove the installation bolt to remove the spare tire. To replace the spare tire in its storage compartment, tighten the bolt firmly with your fingers until there is no more play in the spare tire.

IF YOU HAVE A FLAT TIRE

D050A01A-AAT

If a tire goes flat while you are driving:

1. Take your foot off the accelerator pedal and let the car slow down while driving straight ahead. Do not apply the brakes immediately or attempt to pull off the road as this may cause a loss of control. When the car has slowed to such a speed that it is safe to do so, brake carefully and pull off the road. Drive off the road as far as possible and park on firm, level ground. If you are on a divided highway, do not park in the median area between the two traffic lanes.
2. When the car is stopped, turn on your emergency hazard flashers, set the parking brake and put the transaxle in "P" (automatic) or reverse (manual transaxle).
3. Have all passengers get out of the car. Be sure they all get out on the side of the car that is away from traffic.
4. Change the tire following the instructions provided on the following .

CHANGING A FLAT TIRE

D060A01A-AAT

The procedure described on the following pages can be used to rotate tires as well as to change a flat tire. When preparing to change a flat tire, check to be sure the gear selector lever is in "P" (automatic) or reverse gear (manual transaxle) and that the parking brake is set, then:

D060B02GK-AAT

1. Obtain Spare Tire and Tool

Remove the spare tire and remove the jack and tool bag from the trunk.

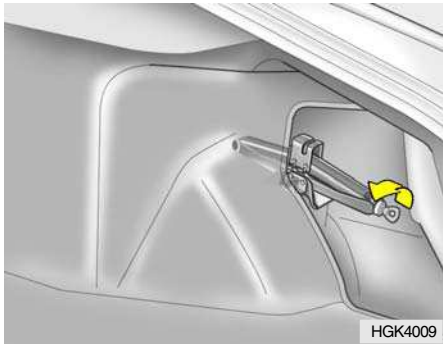

The jack is located behind the right side of luggage trim. Remove the jack cover by unscrewing the bolts. Turn the jack end counterclockwise to lower the jack height by using a screw driver or wrench bar and remove it from the bracket.

D060C01A-AAT

2. Block the Wheel

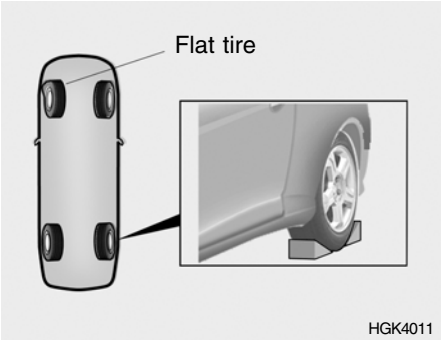

Block the wheel that is diagonally opposite from the flat to keep the vehicle from rolling when the car is raised on the jack.

D060D02A-AAT

3. Loosen Wheel Nuts

The wheel nuts should be loosened slightly before raising the car. To loosen the nuts, turn the wrench handle counterclockwise. When doing this, be sure that the socket is seated completely over the nut so it cannot slip off. For maximum leverage, position the wrench so the handle is to the left as shown in the drawing. Then, while holding the wrench near the end of the handle, push down on it with steady pressure. Do not remove the nuts at this time. Just loosen them about one-half turn.

D060E01A-AAT

4. Put the Jack in Place

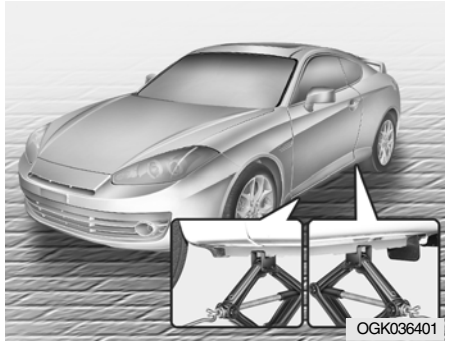

The base of the jack should be placed on firm, level ground. The jack should be positioned as shown in the drawing.

D060F02E-AAT

5. Raising the Car

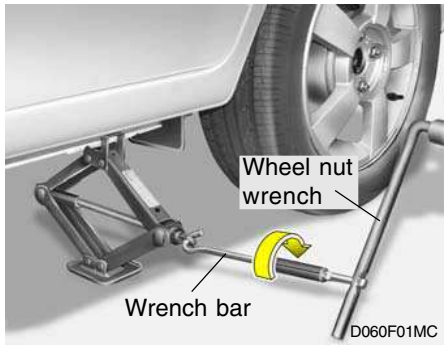

After inserting a bar into the wheel nut wrench, install the bar into the jack as shown in the drawing. To raise the vehicle, turn the jack handle clockwise. As the jack begins to raise the vehicle, double check that it is properly positioned and will not slip. If the jack is on soft ground or sand, place a board, brick, flat stone or other object under the base of the jack to keep it from sinking.

Raise the car high enough so that the fully inflated spare tire can be installed. To do this, you will need more ground clearance than is required to remove the flat tire.

WARNING:
Do not get under the car when it is supported by the jack! This is very dangerous as the jack could fall and cause serious injury or death. No one should stay in the car while the jack is being used.

D060G02Y-AAT

6. Changing Wheels

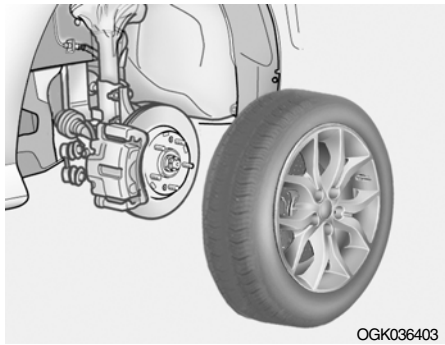

Loosen the wheel nuts and remove them with your fingers. Slide the wheel off the studs and lay it flat so it cannot roll away. To put the wheel on the hub, pick up the spare tire, line up the holes with the studs and slide the wheel onto them. If this is difficult, tip the wheel slightly and get the top hole in the wheel lined up with the top stud. Then jiggle the wheel back and forth until the wheel can be slid over the other studs.

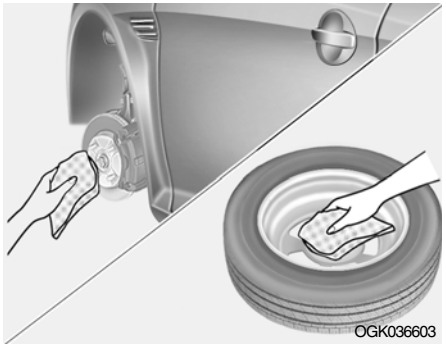

WARNING:
Wheels and wheel covers may have sharp edges. Handle them carefully to avoid possible severe injury. Before putting the wheel into place, be sure that there is nothing on the hub or wheel (such as mud, tar, gravel, etc.) that interferes with the wheel from fitting solidly against the hub. If there is, remove it. If there is not good contact on the mounting surface between the wheel and hub, the wheel nuts could come loose and cause the loss of a wheel. Loss of a wheel may result in loss of control of the vehicle. This may cause serious injury or death.

D060H02A-AAT

7. Re-install Wheel Nuts

To reinstall the wheel, hold it on the studs, put the wheel nuts on the studs and tighten them finger tight. The nuts should be installed with their small diameter ends directed inward. Jiggle the tire to be sure it is completely seated, then tighten the nuts as much as possible with your fingers again.

D060I01E-GAT

8. Lower Vehicle and Tighten Nuts

Lower the car to the ground by turning the wheel nut wrench counterclockwise. Then position the wrench as shown in the drawing and tighten the wheel nuts. Be sure the socket is seated completely over the nut. Do not stand on the wrench handle or use an extension pipe over the wrench handle.

Go around the wheel tightening every other nut until they are all tight. Then double-check each nut for tightness. After changing wheels, have a technician tighten the wheel nuts to their proper torque as soon as possible.

Wheel nut tightening torque:
Steel wheel & aluminium alloy wheel: 900-1,100 kg.cm (65-80 lb.ft)

D060J01FC-GAT

After Changing Wheels

If you have a tire gauge, remove the valve cap and check the air pressure. If the pressure is lower than recommended, drive slowly to the nearest service station and inflate to the correct pressure. If it is too high, adjust it until it is correct. Always reinstall the valve cap after checking or adjusting tire pressure. If the cap is not replaced, air mayleak from the tire. If you lose a valve cap, buy another and install it as soon as possible.
After you have changed wheels, always secure the flat tire in its place in the luggage compartment and return the jack and tools to their proper storage locations.

D070A01GK-GET

(If Installed)

There are some emergency commodities in the vehicle to help you respond to the emergency situation.

Fire extinguisher

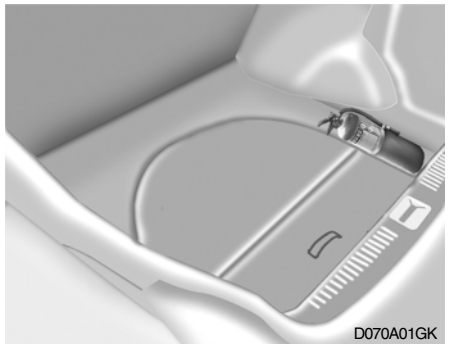

The fire extinguisher is located in the tray under the luggage mat.

If there is small fire and you know how to use the fire extinguisher, take the following steps carefully.

1. Pull the pin at the top of the extinguisher that keeps the handle from being accidentally pressed.
2. Aim the nozzle toward the base of the fire.
3. Stand approximately 2.5 m (8 ft) away from the fire and squeeze the handle to discharge the extinguisher. If you release the handle, the discharge will stop.
4. Sweep the nozzle back and forth at the base of the fire. After the fire appears to be out, watch it carefully since it may re-ignite.

Triangle Reflector

Placed the triangle reflector on the road to warn oncoming vehicles during emergencies, such as when the vehicle is parked by the roadside due to any problems.

First Aid Kit

There are some items such as scissors, bandage and adhesive tape and etc. in the kit to give first aid to an injured person.

Tire Pressure Gauge (If Installed)

You can easily check the tire pressure with a tire pressure gauge that is found in OVM tool bag. Tires normally lose some air in day-to-day use, and you may have to add a few pounds of air periodically and it is not usually a sign of a leaking tire, but of normal wear. Always check tire pressure when the tires are cold because tire pressure increases with temperature.

To check the tire pressure, take the following steps;

1. Unscrew the inflation valve cap that is located on the rim of the tire.
2. Press and hold the gauge against the tire valve. Some air will escape as you begin and more will escape if you don't press the gauge in firmly.
3. A firm non-leaking push will activate the gauge.
4. Read the tire pressure on the gauge to know whether the tire pressure is low or high.
5. Adjust the tire pressures to the specified pressure. See page 8-3.
6. Reinstall the inflation valve cap.

IF YOUR VEHICLE MUST BE TOWED

D080A01O-GAT

If your vehicle has to be towed, it should be done by your Hyundai dealer or a commercial tow truck service. This will help assure that your vehicle is not damaged in towing. Also, professionals are generally aware of local laws governing towing. In any case, rather than risk damage to your car, it is suggested that you show this information to the tow truck operator. Be sure that a safety chain system is used and that all local laws are observed.
It is recommended that your vehicle be towed with a wheel lift and dollies or flatbed equipment with all the wheels off the ground.

CAUTION:

- **Your vehicle can be damaged if towed incorrectly!**
- **Be sure the transaxle is in neutral.**
- **When the engine will not start, be sure the steering is unlocked by placing the key in the "ACC" position.**

D080B01O-GAT

Towing the Vehicle

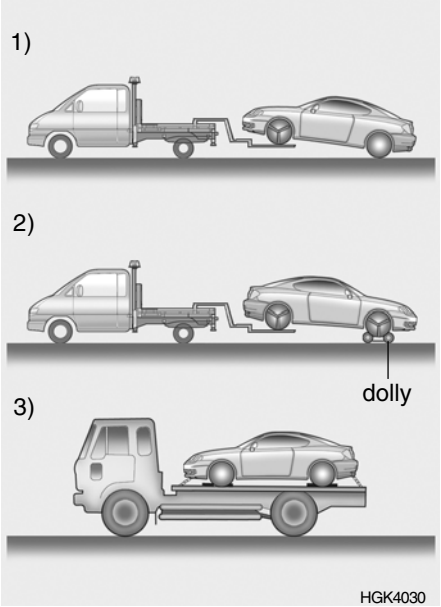

Your vehicle can be towed by wheel lift type truck (1), (2) or flatbed equipment (3).

CAUTION:

- **When towing the vehicle, take care not to cause damage to the bumper or underbody of the vehicle.**

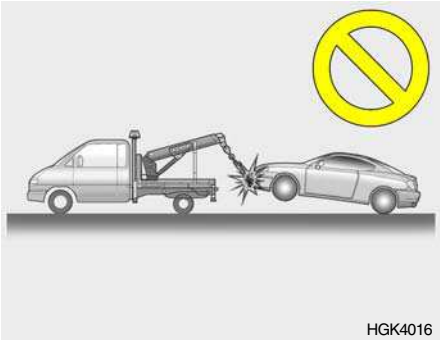

- **Do not tow with sling type truck as this may cause damage to the bumper or underbody of the vehicle.**

1) If the vehicle is being towed with the rear wheels on the ground, be sure the parking brake is released.

NOTE:
Before towing, check the level of the automatic transaxle fluid. If it is below the "HOT" range on the dipstick, add fluid. If you cannot add fluid, a towing dolly must be used.

2) If any of the loaded wheels or suspension components are damaged or the vehicle is being towed with the front wheels on the ground, use a towing dolly under the front wheels.

- Manual Transaxle:
  If you do not use a towing dolly, place the ignition key in the "ACC" position and put the transaxle in "N (Neutral)".

CAUTION:
Do not tow with the key removed or in the "LOCK" position when towing from the rear without a towing dolly.

- Automatic Transaxle:
  Be sure to use a towing dolly under the front wheels.

CAUTION:

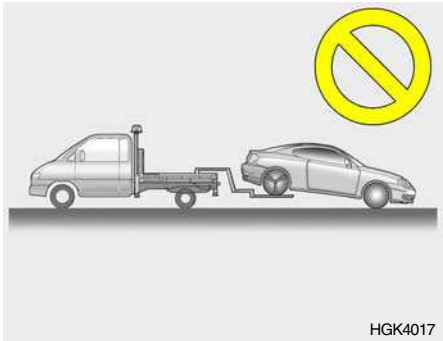

A vehicle with an automatic transaxle should never be towed from the rear with the front wheels on the ground. This can cause serious damage to the transaxle.

3) It is recommended that your vehicle be towed with all the wheels off the ground.

D080D02A-AAT

Emergency Towing

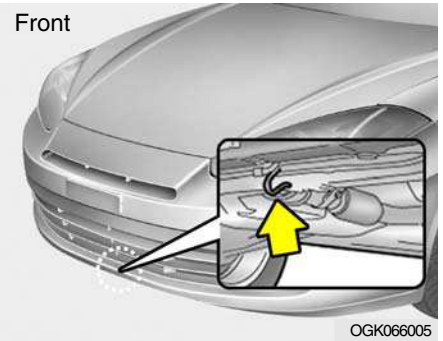

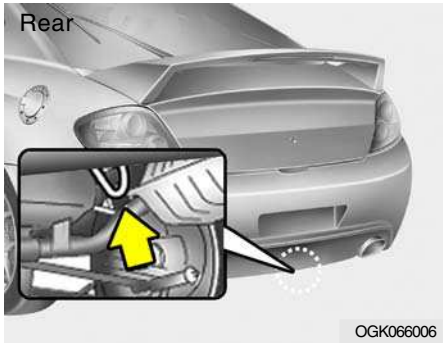

For emergency towing when no commercial tow vehicle is available, attach a tow cable, chain or strap to one of the towing hooks under the front/rear of your car. Do not attempt to tow your vehicle in this manner on any unpaved surface. This could result in serious damage to your car.
Nor should towing be attempted if the wheels, drive train, axles, steering or brakes are damaged. Before towing, be sure the transaxle is in neutral and the key is in "ACC" (with the engine off) or in the "ON" position (with the engine running). A driver must be in the towed car to steer it and operate the brakes.

CAUTION:

- **If the car is being towed with all four wheels on the ground, it can be towed only from the front. Be sure that the transaxle is in neutral. Do not tow at speeds greater than 50 km/h (30 mph) and for more than 25 km (15 miles).**
- **Be sure the steering is unlocked by placing the key in the "ACC" position. A driver must be in the towed vehicle to operate the steering and brakes.**

IF YOU LOSE YOUR KEYS

D120A01A-GAT

If you lose your keys, many Hyundai dealers can make you a new key if you have your key number. If you lock the keys inside your car and you cannot obtain a new key, many Hyundai dealers can use special tools to open the door for you. Information about the key of immobilizer system (If Installed) will be found on page 1-4.

CORROSION PREVENTION & APPEARANCE CARE

Corrosion Protection 4-2
To Help Prevent Corrosion 4-3
Washing and Waxing 4-4
Cleaning the Interior 4-6

4

E010A01A-AAT

Protecting Your Hyundai from Corrosion

By using the most advanced design and construction practices to combat corrosion, Hyundai produces cars of the highest quality, however, this is only part of the job. To achieve the long-term corrosion resistance your Hyundai can deliver, the owner's co-operation and assistance is also required.

E010B01A-AAT

Common Causes of Corrosion

The most common causes of corrosion on your car are:

- o Road salt, dirt and moisture that is allowed to accumulate underneath the car.
- o Removal of paint or protective coatings by stones, gravel, abrasion or minor scrapes and dents which leave unprotected metal exposed to corrosion.

E010C01A-AAT

High-Corrosion Areas

If you live in an area where your car is regularly exposed to corrosive materials, corrosion protection is particularly important. Some of the common causes of accelerated corrosion are road salts, dust control chemicals, ocean air and industrial pollution.

E010D01A-AAT

Moisture Breeds Corrosion

Moisture creates the conditions in which corrosion is most likely to occur. For example, corrosion is accelerated by high humidity, particularly when temperatures are just above freezing. In such conditions, the corrosive material is kept in contact with the car surfaces by moisture that is slow to evaporate. Mud is a particular corrosive because it is slow to dry and holds moisture in contact with the vehicle. Although the mud appears to be dry, it can still retain the moisture and promote corrosion. High temperatures can also accelerate corrosion of parts that are not properly ventilated so the moisture can be dispersed. For all these reasons, it is particularly important to keep your car clean and free of mud or accumulations of other materials. This applies not only to the visible surfaces but particularly to the underside of the car.

TO HELP PREVENT CORROSION

E020A01A-AAT

You can help prevent corrosion from getting started by observing the following:

E020B01A-AAT

Keep Your Car Clean

The best way to prevent corrosion is to keep your car clean and free of corrosive materials. Attention to the underside of the car is particularly important.

- o If you live in a high-corrosion area — where road salts are used, near the ocean, areas with industrial pollution, acid rain, etc.—, you should take extra care to prevent corrosion. In winter, hose off the underside of your car at least once a month and be sure to clean the underside thoroughly when winter is over.
- o When cleaning underneath the car, give particular attention to the components under the fenders and other areas that are hidden from view. Do a thorough job; just dampening the accumulated mud rather than washing it away will accelerate corrosion rather than prevent it. Water under high pressure and steam are particularly effective in removing accumulated mud and corrosive materials.
- o When cleaning lower door panels, rocker panels and frame members, be sure that drain holes are kept open so that moisture can escape and not be trapped inside to accelerate corrosion.

E020C01A-AAT

Keep Your Garage Dry

Don't park your car in a damp, poorly ventilated garage. This creates a favorable environment for corrosion. This is particularly true if you wash your car in the garage or drive it into the garage when it is still wet or covered with snow, ice or mud. Even a heated garage can contribute to corrosion unless it is well ventilated so moisture is dispersed.

E020D01A-AAT

Keep Paint and Trim in Good Condition

Scratches or chips in the finish should be covered with "touch-up" paint as soon as possible to reduce the possibility of corrosion. If bare metal is showing through, the attention of a qualified body and paint shop is recommended.

E020E01A-AAT

Don't Neglect the Interior

Moisture can collect under the floor mats and carpeting to cause corrosion. Check under the mats periodically to be sure the carpeting is dry. Use particular care if you carry fertilizers, cleaning materials or chemicals in the car.
These should be carried only in proper containers and any spills or leaks should be cleaned up, flushed with clear water and thoroughly dried.

4 WASHING AND WAXING

E030A02GK-AAT

Washing Your Hyundai

Never wash your car when the surface is hot from being in the sun. Always wash your car in the shade.

Wash your car frequently. Dirt is abrasive and can scratch the paint if it is not removed. Air pollution or acid rain may damage the paint and trim through chemical action if pollutants are allowed to remain in contact with the surface. If you live near the ocean or in an area where road salts or dust control chemicals are used, you should pay particular attention to the underside of the car. Start by rinsing the car to remove dust and loose dirt. In winter, or if you have driven through mud or muddy water, be sure to thoroughly clean the underside as well. Use a hard direct stream of water to remove accumulations of mud or corrosive materials. High pressure car washes may cause water to enter your vehicle. Use a good quality car-washing solution and follow the manufacturer's directions on the package. These are available at your Hyundai dealer or auto parts outlet. Don't use strong household detergents, gasoline, strong solvents or abrasive cleaning powders as these may damage the finish.
Use a clean sponge or cloth, rinse it frequently and don't damage the finish by rubbing too hard. For stubborn spots, dampen them frequently and remove them a little at a time.
To clean whitewall tires, use a stiff brush or soapy steel-wool scouring pad.
To clean plastic wheel covers, use a clean sponge or soft cloth and water.

To clean cast aluminum alloy wheels, use a mild soap or neutral detergent. Do not use abrasive cleaners. Protect the bare-metal surfaces by cleaning, polishing and waxing. Because aluminum is subject to corrosion, be sure to give aluminum alloy wheels special attention in winter. If you drive on salted roads, clean the wheels thoroughly afterwards.

After washing, be sure to rinse thoroughly. If soapy water dries on the finish, streaking will result.

When the weather is warm and the humidity low, you may find it necessary to rinse each section immediately after washing to avoid streaking.

After rinsing, dry the car using a damp chamois or soft, absorbent cloth. The reason for drying the car is to remove water from the car so it will dry without water spots. Don't rub, this can damage the finish.

If you find any nicks or scratches in the paint, use touch-up paint to cover them to prevent corrosion. To protect the paintwork of the car against corrosion, you must clean your Hyundai (at least once a month). Give special attention to the removal of salt, mud and other substances on the underside of the splashboards of the car. Make sure that the outlets and the underside of the doors are open. Paint damage can be caused by small accumulation of tar, industrial precipitation, tree resin, insects and bird droppings, when not removed immediately. If water alone is not strong enough to remove the accumulated dirt, use a mild car washing

solution. Be sure to rinse the surface after washing to remove the solution. Never allow the solution to dry on the painted surfaces.

CAUTION:

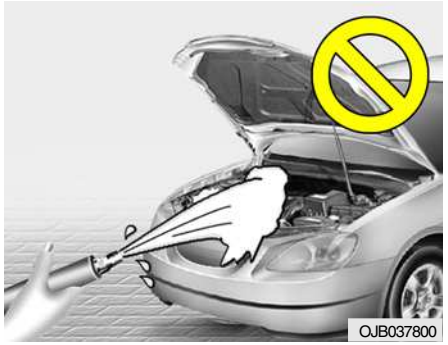

- **Water washing in the engine compartment including high pressure water washing may cause the failure of electrical circuits located in the engine compartment.**
- **Never allow water or other liquids to come in contact with electrical/ electronic components inside the vehicle as this may damage them.**

E030B01A-AAT

Spot Cleaning

Don't use gasoline, strong solvents or corrosive cleaning agents. These can damage the finish of the car. To remove road tar, use turpentine on a clean, soft cloth. Be gentle.
To remove dead insects or tree sap, use warm water and mild soap or car-washing solution. Soak the spot and rub gently. If the paint has lost its luster, use a commercial car-cleaning polish.

E030C01A-AAT

Polishing and Waxing

Always wash and dry the car before polishing or waxing or using a combination cleaner and wax. Use a good quality commercial product and follow the manufacturer's directions on the container. Polish and wax the bright trim pieces as well as the paint.

E030D01A-AAT

When to Wax Again

You should polish and wax the car again when water no longer beads on a clean surface but spreads out over a larger area.

E030E01A-AAT

Maintaining Bumpers

Special precautions must be observed to preserve the appearance of the bumpers on your Hyundai. They are:

- Be careful not to spill battery electrolyte or hydraulic brake fluid on the bumpers. If you do, wash it off immediately with clear water.
- Be gentle when cleaning the bumper sur-faces. They are made of soft plastic and the surface can be damaged if mistreated. Do not use abrasive cleaners. Use warm water and mild soap or car-washing solution.
- Do not expose the bumpers to high tem-peratures. For example, if you have your car repainted, do not leave the bumpers on the car if the car is going to be placed in a high-temperature paint booth.

E040A01A-AAT

To Clean the Vinyl Upholstery

To clean the vinyl upholstery, first remove loose dirt and dust with a vacuum cleaner. Then apply a solution of mild soap or detergent and water using a clean sponge or soft cloth. Allow this to stay on the surface to loosen the dirt, then wipe with a clean damp sponge or cloth. If all the dirt stains are not removed, repeat this procedure until the upholstery is clean. Do not use gasoline, solvent, paint thinner or other strong cleaners.

E040B01A-AAT

To Clean the Leather Upholstery (If Installed)

In the normal course of use, leather upholstered surfaces will, like any material, pick-up dust and dirt. This dust and dirt must be cleaned off or it may work into the surface of the leather, causing damage.

Fine leather needs care, and should be cleaned when necessary. Washing leather thoroughly with soap and water will keep your leather lustrous, beautiful and ensure you have many years of wear.
Take a piece of cheese cloth and using any mild soap and lukewarm water, work up a good lather. Thoroughly wash the leather. Wipe clean with a slightly damp cloth and dry with soft cloth. Do this as often as the leather becomes soiled.

During tanning operations, sufficient oils are incorporated through processing that none need be applied during the life of the leather. Oil applied to the finished surface will in no way help the leather and may do more harm than good. Varnishes and furniture polishes should never be used under any conditions.

E040C01A-AAT

Cleaning the Carpets

Use a foam-type carpet cleaner. Cleaners of this type are available in aerosol cans in liquid form or powder. Read the instructions and follow them exactly. Using a vacuum cleaner with the appropriate attachment, remove as much dirt from the carpets as possible. Apply the foam following the manufacturer's directions, then rub in overlapping circles. Do not add water. These cleaners work best when the carpet is kept as dry as possible.

E040D01A-AAT

Cleaning the Seat Belts

To clean the seat belts, use a cloth or sponge with mild soap or detergent and warm water. Do not use strong detergents, dye, bleach or abrasive materials on the seat belts as this may weaken the fabric.
While cleaning the belts, inspect them for excessive wear, cuts, fraying or other signs of damage and replace them if necessary.

E040E01A-AAT

Cleaning the Windows

You may use any household window cleaner on the windows. However, when cleaning the inside of the rear window be careful not to damage the rear window defroster wiring.

E050A01A-AAT

If you have any questions about the care of your car, consult your Hyundai dealer.

VEHICLE MAINTENANCE REQUIREMENTS

Maintenance Intervals 5-2
Scheduled Maintenance 5-4
Maintenance Under Severe Usage Conditions 5-7
Explanation of Scheduled Maintenance Items 5-8

5

F010A01A-GAT
Service Requirements

To assure that you receive the greatest number of kilometers of satisfying operation from your Hyundai, certain maintenance procedures must be performed. Although careful design and engineering have reduced these to a minimum, those that are required are of the utmost importance.
It is your responsibility to have these maintenance procedures performed to comply with the terms of the warranties covering your new Hyundai. The Service Passport supplied with your new vehicle provides further information about these warranties.

F010B01A-AAT
Maintenance Requirements

The maintenance required for your Hyundai can be divided into three main areas:

- o Specified scheduled procedures
- o General checks
- o Do-it-yourself maintenance

F010C01A-GAT
Specified Scheduled Procedures

These are the procedures such as inspections, adjustments and replacements that are listed in the maintenance charts starting on page 5-4. These procedures must be performed at the intervals shown in the maintenance schedule to assure that your warranty remains in effect. Although it is strongly recommended that they be performed by the factory-trained or distributor-trained technicians at your Hyundai dealer, these procedures may be performed at any qualified service facility.
It is suggested that genuine Hyundai service parts be used for any required repairs or replacements. Other parts of equivalent quality such as engine oil, engine coolant, manual or auto transaxle oil, brake fluid and so on which are not supplied by Hyundai Motor Company or its distributor may be used without affecting your warranty coverage but you should always be sure these are equivalent to the quality of the original Hyundai parts. Your Service Passport provides further information about your warranty coverage.

F010D01A-AAT
General Checks

These are the regular checks you should perform when you drive your Hyundai or you fill the fuel tank. A list of these items will be found on page 6-5.

F010E01A-AAT
Do-It-Yourself Maintenance

If you are mechanically inclined, own a few tools that are required and want to take the time to do so, you can inspect and service a number of items. For more information about doing it yourself, see Section 6.

F010F01A-GAT

A Few Tips

Whenever you have your Hyundai serviced, keep copies of the service records in your glove box. This will help ensure that you can document that the required procedures have been performed to keep your warranties in effect. This is especially important when service is not performed by an authorized Hyundai dealer.

SCHEDULED MAINTENANCE REQUIREMENTS

F020A02A-GAT

Inspection should be performed any time a malfunction is experienced or suspected. Receipts for all emission control system services should be retained to demonstrate compliance with conditions of the emissions system warranty.

For severe usage maintenance requirements, see page 5-7 of this section.

4 SCHEDULED MAINTENANCE

F030A01A-GAT

The following maintenance services must be performed to assure good vehicle control and performance. Keep receipts for all vehicle services to protect your warranty. Where both mileage and time are shown, the frequency of service is determined by whichever occurs first.

F030B06GK-GAT

R :Replace I : Inspect and, after Inspection, clean, adjust, repair or replace if necessary.

NO.	DESCRIPTION		KILOMETERS X 1000	15	30	45	60	75	90	105	120
			MONTHS	12	24	36	48	60	72	84	96
	ENGINE CONTROL SYSTEM MAINTENANCE										
1	ENGINE OIL & FILTER			R	R	R	R	R	R	R	R
2	DRIVE BELT	1.6 DOHC/2.0 DOHC CVVT (ALT, W/PUMP, P/STR'G)		I	I	I	I	I	I	I	I
		2.7 V6 (AUTO-TENSIONER, ALT, P/STR'G, A/CON)				I			I		
3	FUEL FILTER (MPI)						R				R
4	FUEL LINES, FUEL HOSES & CONNECTIONS			I	I	I	I	I	I	I	I
5	TIMING BELT	2.7L					I		R		
		2.0L		See Note (1)							
6	TIMING BELT TENSIONER AND IDLER (2.0)			See Note (2)							
7	VAPOR HOSE & FUEL FILLER CAP				I		I		I		I
8	VACUUM HOSE			I	I	I	I	I	I	I	I
9	CRANKCASE VENTILATION HOSES				I		I		I		I

Note : (1) FOR EVERY 90,000 KM OR 48 MONTHS: "I" AND FOR EVERY 140,000 KM OR 72 MONTH: "R"
(2) WHEN TIMING BELT IS INSPECTED OR REPLACED WHICHEVER OCCURS "I"

NO.	DESCRIPTION	KILOMETERS X 1000	15	30	45	60	75	90	105	120
		MONTHS	12	24	36	48	60	72	84	96
	ENGINE CONTROL SYSTEM MAINTENANCE									
10	AIR CLEANER FILTER		I	I	R	I	I	R	I	I
11	SPARK PLUGS (NICKEL COATED)		See Note (3)							
	SPARK PLUGS (PLATINUM COATED)		See Note (4)							
	SPARK PLUGS (IRIDIUM COATED)		See Note (5)							
12	VALVE CLEARENCE (2.0L, 2.7L)		See Note (6)							
13	FUEL TANK AIR FILTER		I	I	R	I	I	R	I	I

Note :
(3) FOR EVERY 40,000 KM: "R"
(4) FOR EVERY 100,000 KM: "R"
(5) FOR EVERY 160,000 KM: "R"
(6) FOR EVERY 96,000 KM OR 48 MONTHS, WHICHEVER OCCURS FIRST : "I"

F030C05GK-GAT

R : Replace I : Inspect and, after inspection, clean, adjust, repair or replace if necessary

NO.	DESCRIPTION		KILOMETERS X 1000	15	30	45	60	75	90	105	120
			MONTHS	12	24	36	48	60	72	84	96
	GENERAL MAINTENANCE										
1	COOLING SYSTEM			I	I	I	I	I	I	I	I
2	COOLANT	European Community Only		See Note (1)							
		Except European Community		See Note (2)							
3	MANUAL TRANSAXLE OIL			I	I	I	I	I	I	I	I
4	AUTOMATIC TRANSAXLE FLUID	European Community Only		I	I	I	I	I	R	I	I
		Except European Community		I	I	I	I	I	I	I	I
5	BRAKE HOSES AND LINES			I	I	I	I	I	I	I	I
6	BRAKE FLUID & CLUTCH FLUID				I		I		I		I
7	REAR BRAKE DRUMS/LININGS, PARKING BRAKE				I		I		I		I
8	BRAKE PADS, CALIPERS AND ROTORS			I	I	I	I	I	I	I	I
9	EXHAUST PIPE AND MUFFLER			I	I	I	I	I	I	I	I
10	SUSPENSION MOUNTING BOLTS			I	I	I	I	I	I	I	I
11	STEERING GEAR BOX, LINKAGE & BOOTS/LOWER ARM BALL JOINT			I	I	I	I	I	I	I	I
12	POWER STEERING PUMP, BELT AND HOSES			I	I	I	I	I	I	I	I
13	DRIVE SHAFTS AND BOOTS			I	I	I	I	I	I	I	I
14	AIR CONDITIONING REFRIGERANT			I	I	I	I	I	I	I	I
15	CLIMATE CONTROL AIR FILTER (IN FRONT OF BLOWER UNIT)			R	R	R	R	R	R	R	R

Note : (1) FOR THE FIRST TIME, REPLACE THE COOLANT AT 100,000 KM OR 60 MONTHS.
AFTER THAT, REPLACE IT EVERY 40,000 KM OR 24 MONTHS.
(2) FOR THE FIRST TIME, REPLACE THE COOLANT AT 48,000 KM OR 24 MONTHS.
AFTER THAT, REPLACE IT EVERY 40,000 KM OR 24 MONTHS.

MAINTENANCE UNDER SEVERE USAGE CONDITIONS

F040A04GK-GAT

The following items must be serviced more frequently on cars normally used under severe driving conditions. Refer to the chart below for the appropriate maintenance intervals.

R : Replace I : Inspect and, after inspection, clean, adjust, repair or replace if necessary

MAINTENANCE ITEM		MAINTENANCE OPERATION	MAINTENANCE INTERVALS	DRIVING CONDITION
ENGINE OIL AND FILTER		R	EVERY 7,500 KM OR 6 MONTHS	A, B, C, D, E, F, G, H, I, K
AIR CLEANER FILTER		R	MORE FREQUENTLY	C, E
SPARK PLUGS		R	MORE FREQUENTLY	B, H
TIMING BELT	2.7	R	EVERY 60,000 KM OR 48 MONTHS	D, E, F, G
	2.0	R	EVERY 90,000 KM OR 48 MONTHS	B, D, E, F, G
BRAKE PADS, CALIPERS AND ROTORS		I	MORE FREQUENTLY	C, D, G, H
REAR BRAKE DRUMS/LININGS/PADS, PARKING BRAKE		I	MORE FREQUENTLY	C, D, G, H
STEERING GEAR BOX, LINKAGE & BOOTS/LOWER ARM BALL JOINT		I	MORE FREQUENTLY	C, D, E, F
DRIVESHAFTS AND BOOTS		I	EVERY 15,000 KM OR 12 MONTHS	C, D, E, F, G
MANUAL TRANSAXLE OIL		R	EVERY 100,000 KM	A, C, D, E, F, G, H, I, J
AUTOMATIC TRANSAXLE FLUID	European Community Only	R	EVERY 45,000 KM	A, C, E, F, G, H, I
	Except European Community		EVERY 40,000 KM	
CLIMATE CONTROL AIR FILTER (IN FRONT OF BLOWER UNIT)		R	MORE FREQUENTLY	C, E

SEVERE DRIVING CONDITIONS

A - Repeatly driving short distance of less than 8km(5miles) in normal temperature or less than 16km(10miles) in freezing temperature
B - Extensive engine idling or low speed driving for long distances
C - Driving on rough, dusty, muddy, unpaved, graveled or salt-spread roads
D - Driving in areas using salt or other corrosive materials or in very cold weather
E - Driving in sandy areas
F - Driving in heavy traffic area over 32°C(90°F)
G - Driving on uphill, downhill, or mountain road
H - Towing a Trailer, or using a camper, or roof rack
I - Driving as a patrol car, taxi, other commercial use or vehicle towing
J - Driving over 170 Km/h(100 MPH)
K - Frequently driving in stop-and-go conditions

F060M01A-AAT

o Engine Oil and Filter

The engine oil and filter should be changed at the intervals specified in the maintenance schedule. If the car is being driven in severe conditions, more frequent oil and filter changes are required.

F060B02A-AAT

o Drive Belts

Inspect all drive belts for evidence of cuts, cracks, excessive wear or oil saturation and replace if necessary. Drive belts should be checked periodically for proper tension and adjusted as necessary.

F060C01A-AAT

o Fuel Filter

A clogged filter can limit the speed at which the vehicle may be driven, damage the emission system and cause hard starting. If an excessive amount of foreign matter accumulates in the fuel tank, the filter may require replacement more frequently.
After installing a new filter, run the engine for several minutes, and check for leaks at the connections. Fuel filters should be installed by trained technicians.

F060D01A-AAT

o Fuel Lines, Fuel Hoses and Connections

Check the fuel lines, fuel hoses and connections for leakage and damage. Have a trained technician replace any damaged or leaking parts immediately.

F060E01A-AAT

o Timing Belt

Inspect all parts related to the timing belt for damage and deformation. Replace any damaged parts immediately.

F060G01A-AAT

o Vapor Hose and Fuel Filler cap

The vapor hose and fuel filler cap should be inspected at those intervals specified in the maintenance schedule. Make sure that a new vapor hose or fuel filler cap is correctly replaced.

F060F02A-AAT

o Crankcase Ventilation Hoses

Inspect the surface of hoses for evidence of heat and/or mechanical damage. Hard and brittle rubber, cracking, tears, cuts, abrasions, and excessive swelling indicate deterioration. Particular attention should be paid to examining those hose surfaces nearest to high heat sources, such as the exhaust manifold.
Inspect the hose routing to assure that the hoses do not come in contact with any heat source, sharp edges or moving component which might cause heat damage or mechanical wear. Inspect all hose connections, such as clamps and couplings, to make sure they are secure, and that no leaks are present. Hoses should be replaced immediately if there is any evidence of deterioration or damage.

F060H01A-AAT

o Air Cleaner Filter

A Genuine Hyundai air cleaner filter is recommended when the filter is replaced.

F060J01A-AAT

o Spark Plugs

Make sure to install new spark plugs of the correct heat range.

F060N02E-AAT

o Valve Clearance

Inspect excessive valve noise and/or engine vibration and adjust if necessary. A qualified technician should perform the operation.

F070B01A-GAT

o Cooling System

Check the cooling system part, such as radiator, coolant reservoir, hoses and connections for leakage and damage. Replace any damaged parts.

F070C01A-AAT

o Coolant

The coolant should be changed at the intervals specified in the maintenance schedule.

F070D01A-AAT

o Manual Transaxle Oil

Inspect the manual transaxle oil according to the maintenance schedule.

NOTE:
If the oil level is low, check for possible leaks before adding oil. Do not overfill.

F070E05A-AAT

o Automatic Transaxle Fluid

The fluid level should be in the "HOT" range of the dipstick, after the engine and transaxle are at normal operating temperature. Check the automatic transaxle fluid level with the engine running and the transaxle in neutral, with the parking brake properly applied. Use Hyundai Genuine ATF SP-III, DIAMOND ATF SP-III, SK ATF SP-III or other brands appraoved by Hyundai Motor Co., when adding or changing fluid.

F070F01A-AAT

o Brake Hoses and Lines

Visually check for proper installation, chafing, cracks, deterioration and any leakage. Replace any deteriorated or damaged parts immediately.

F070G02A-AAT

o Brake Fluid & Clutch Fluid

Check brake fluid level in the brake fluid reservoir. The level should be between "MIN" and "MAX" marks on the side of the reservoir. Use only hydraulic brake fluid conforming to DOT 3 or DOT 4.

F070H01A-AAT

o Rear Brake Drums/Linings, Parking Brake

Check the rear brake drums and linings for scoring, burning, leaking fluid, broken parts, and excessive wear. Inspect the parking brake system including the parking brake lever and cables. For detailed service procedures, refer to the Shop Manual.

F070J01A-AAT

o Brake Pads, Calipers and Rotors

Check the pads for excessive wear, discs for run out and wear, and calipers for fluid leakage.

F070K01A-AAT

o Exhaust Pipe and Muffler

Visually inspect the exhaust pipes, muffler and hangers for cracks, deterioration, or damage. Start the engine and listen carefully for any exhaust gas leakage. Tighten connections or replace parts as necessary.

F070L01A-AAT

o Suspension Mounting Bolts

Check the suspension connections for looseness or damage. Retighten to the specified torque.

F070M01A-AAT

o Steering Gear Box, Linkage & Boots/Lower Arm Ball Joint

With the vehicle stopped and engine off, check for excessive free-play in the steering wheel. Check the linkage for bends or damage. Check the dust boots and ball joints for deterioration, cracks, or damage. Replace any damaged parts.

F070N01A-AAT

o Power Steering Pump, Belt and Hoses

Check the power steering pump and hoses for leakage and damage. Replace any damaged or leaking parts immediately. Inspect the power steering belt for evidence of cuts, cracks, excessive wear, oiliness and proper tension. Replace or adjust it if necessary.

F070P01A-AAT

o Drive Shafts and Boots

Check the drive shafts, boots and clamps for cracks, deterioration, or damage. Replace any damaged parts and, if necessary, repack the grease.

F070Q01A-AAT

o Air Conditioning Refrigerant

Check the air conditioning lines and connections for leakage and damage. Check air conditioning performance according to the relevant shop manual if necessary.

DO-IT-YOURSELF MAINTENANCE

Engine Compartment 6-2
General Checks 6-5
Checking the Engine Oil 6-6
Checking and Changing the Engine Coolant 6-9
Changing the Air Cleaner Filter 6-11
Checking the Transaxle Oil (Manual) 6-15
Checking the Transaxle Fluid (Automatic) 6-15
Checking the Brakes 6-17
Checking the Clutch Fluid 6-18
Air Conditioning Care 6-18
Changing the Climate Control Air Filter 6-19
Checking and Replacing Fuses 6-21
Checking the Battery 6-23
Checking Electric Cooling Fans 6-24
Power Steering Fluid Level 6-25
Headlight Aiming Adjustment 6-26
Replacement of Light Bulbs 6-27
Bulb Wattage 6-36
Fuse Panel Description 6-37

G010A01GK-GAT

Gasoline Engine (1.6 DOHC)

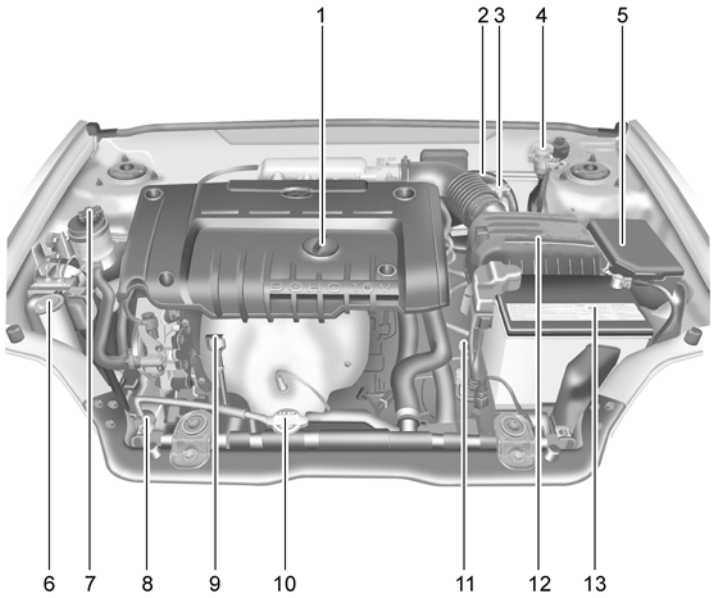

CAUTION:
When inspecting or servicing the engine, you should handle tools and other heavy objects carefully so that the plastic rocker cover of the engine is not damaged.

HGK5003

1. Engine oil filler cap
2. Brake Booster
3. Brake fluid reservoir
4. Clutch fluid reservoir (If installed)
5. Relay box
6. Windshield washer fluid reservoir cap
7. Power steering fluid reservoir
8. Engine coolant reservoir
9. Engine oil level dipstick
10. Radiator cap
11. Automatic transaxle fluid level dipstick (If installed)
12. Air cleaner
13. Battery

G010B01GK-GAT

(2.0 DOHC CVVT)

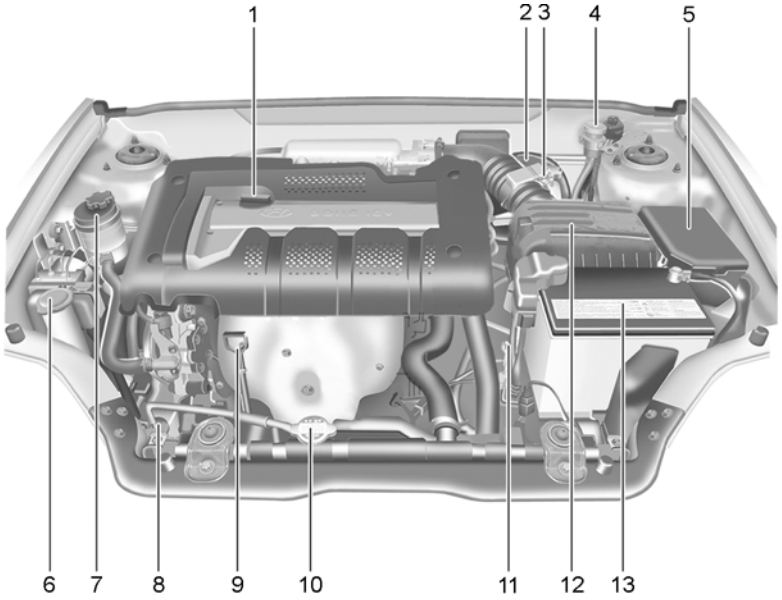

HGK5002

CAUTION:
When inspecting or servicing the engine, you should handle tools and other heavy objects carefully so that the plastic rocker cover of the engine is not damaged.

1. Engine oil filler cap
2. Brake Booster
3. Brake fluid reservoir
4. Clutch fluid reservoir (If installed)
5. Relay box
6. Windshield washer fluid reservoir cap
7. Power steering fluid reservoir
8. Engine coolant reservoir
9. Engine oil level dipstick
10. Radiator cap
11. Automatic transaxle fluid level dipstick (If installed)
12. Air cleaner
13. Battery

G010C01GK-GAT

(2.7 V6)

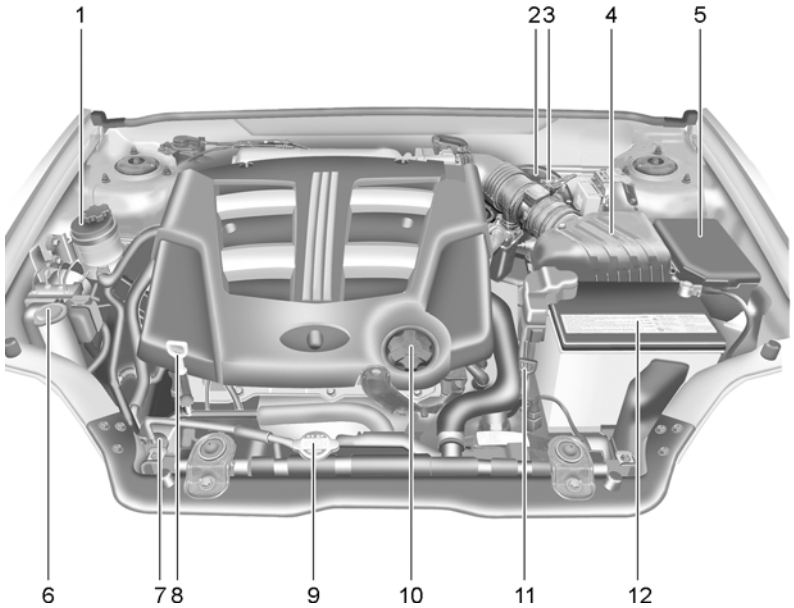

CAUTION:
When inspecting or servicing the engine, you should handle tools and other heavy objects carefully so that the plastic rocker cover of the engine is not damaged.

HGK5001

1. Power steering fluid reservoir
2. Brake Booster
3. Brake fluid reservoir
4. Air cleaner
5. Relay box
6. Windshield washer fluid reservoir cap
7. Engine coolant reservoir
8. Engine oil level dipstick
9. Radiator cap
10. Engine oil filler cap
11. Automatic transaxle fluid level dipstick (If installed)
12. Battery

GENERAL CHECKS

G020A01A-AAT

Engine Compartment

The following should be checked regularly:

- o Engine oil level and condition
- o Transaxle fluid level and condition
- o Brake fluid level
- o Clutch fluid level
- o Engine coolant level
- o Windshield washer fluid level
- o Accessory drive belt condition
- o Engine Coolant hose condition
- o Fluid leaks (on or below components)
- o Power steering fluid level
- o Battery condition
- o Air filter condition

G020B01A-AAT

Vehicle Exterior

The following should be checked monthly:

- o Overall appearance and condition
- o Wheel condition and wheel nut torque
- o Exhaust system condition
- o Light condition and operation
- o Windshield glass condition
- o Wiper blade condition
- o Paint condition and body corrosion
- o Fluid leaks
- o Door and hood lock condition
- o Tire pressure and condition (including spare tire)

G020C01A-AAT

Vehicle Interior

The following should be checked each time when the vehicle is driven:

- o Lights operation
- o Windshield wiper operation
- o Horn operation
- o Defroster, heating system operation (and air conditioning, if installed)
- o Steering operation and condition
- o Mirror condition and operation
- o Turn signal operation
- o Accelerator pedal operation
- o Brake operation, including parking brake
- o Manual transaxle operation, including clutch operation
- o Automatic transaxle operation, including "Park" mechanism operation
- o Seat control condition and operation
- o Seat belt condition and operation
- o Sunvisor operation

If you notice anything that does not operate correctly or appears to be functioning incorrectly, inspect it carefully and seek assistance from your Hyundai dealer if service is needed.

MAINTENANCE PRECAUTIONS

G020D01TG-GAT

Improper or incomplete service may result in problems. This section gives instructions only for the maintenance items that are easy to perform. Several procedures should be done by an authorized Hyundai dealer.

NOTE:

Improper owner maintenance during the warranty period may affect warranty coverage.

WARNING:

- **Performing maintenance work on a vehicle can be dangerous. You can be seriously injured while performing some maintenance procedures. If you lack sufficient knowledge and experience or the proper tools and equipment to do the work, have it done by an authorized Hyundai dealer.**
- **Working under the hood with the engine running is dangerous. It becomes even more dangerous when you wear jewelry or loose clothing. These can become entangled in moving parts and result in injury. Therefore, if you must run the engine while working under the hood, make certain that you remove all jewelry (especially rings, bracelets, watches, and necklaces) and all neckties, scarves, and similar loose clothing before getting near the engine or cooling fans.**

CHECKING THE ENGINE OIL

G030A02O-GAT

Recommended Oil

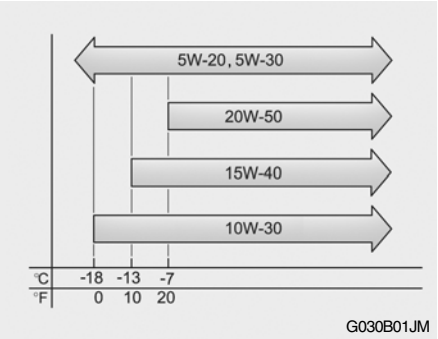

Engine oil is essential to the performance and service of the engine. It is suggested that you check the oil level at least once a week in normal use and more often if you are on a trip or driving in severe conditions.

The engine oil quality should meet the following classification.

API SJ, SL or ABOVE,
ILSAC GF-3 or ABOVE

NOTE:

- **For good fuel economy, SAE 5W-20 (5W-30), ILSAC GF-3 engine oil is preferred regardless of regional option and engine variation.**
- **If SAE 5W-20, ILSAC GF-3 engine oil is not available, secondary recommended engine oil for corresponding temperature range can be used.**

G030C02A-AAT

To Check the Oil Level

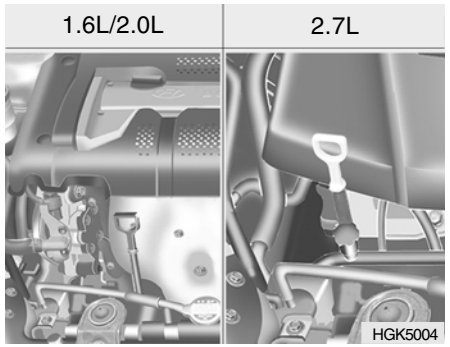

Before checking the oil, warm up the engine to the normal operating temperature and be sure it is parked on level ground. Turn the engine off.
Wait five minutes, then remove the dipstick, wipe it off, fully reinsert the dipstick and withdraw it again. Then note the highest level the oil has reached on the dipstick. It should be between the upper ("F") and lower ("L") range.

WARNING:
Be very careful not to touch the radiator hose when checking the engine oil as it may be hot enough to burn you.

G030D01A-GAT

Adding Oil

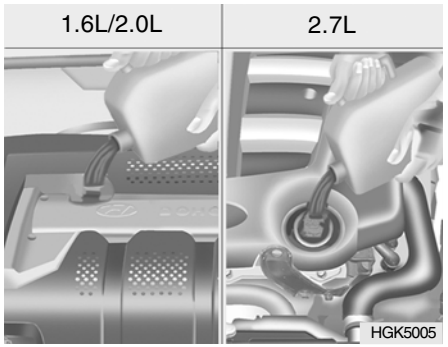

If the oil level is close to or below the "L" mark, add oil until it reaches the "F" mark. To add oil:

1. Remove the oil filler cap by turning it counter-clockwise.
2. Add oil, then check the level again. Do not overfill.
3. Replace the cap by turning it clockwise.

The distance between the "F" and "L" marks is equal to about 1 liter of oil.

WARNING:
Be very careful not to touch the radiator hose when adding the engine oil as it may be hot enough to burn you.

G350A01A-GAT

Engine Oil Consumption
Function of Engine Oil

Engine oil has the primary function of lubricating and cooling the inside of the engine.

Engine oil consumption

It is normal that an engine should consume some engine oil while normal driving. The cause of oil consumption in a normal engine are as follows;

o Engine oil is used to lubricate pistons, piston rings and cylinders.
A thin film of oil is left on the cylinder wall when a piston moves downwards in the cylinder. High negative pressure generated during engine operation sucks some of the oil into the combustion chamber.
This oil with some oil of the cylinder wall is burned by the high temperature combustion gases during the combustion process.

o The engine oil consumption is strongly effected by the viscosity and quality of oil, engine rpm and driving condition etc. More engine oil may be consumed under severe driving conditions such as high speeds, frequent acceleration and deceleration, compared to normal driving condition.

CHECKING AND CHANGING THE ENGINE COOLANT

G050A01A-AAT

WARNING:
Do not remove the radiator cap when the engine is hot. When the engine is hot, the engine coolant is under pressure and may erupt through the opening if the cap is removed. You could be seriously burned if you do not observe this precaution. Do not remove the radiator cap until the radiator is cool to the touch.

G050B01A-AAT

Recommended Engine Coolant

Use a high quality ethylene-glycol coolant in a 50/50 mix with water. The engine coolant should be compatible with aluminum engine parts. Additional corrosion inhibitors or additives should not be used. The cooling system must be maintained with the correct concentration and type of engine coolant to prevent freezing and corrosion. Never allow the concentration of antifreeze to exceed the 60% level or go below the 35% level, or damage to the cooling system may result. For proper concentration when adding or replacing the engine coolant, refer to the following table.

Ambient temperature °C (°F)	Engine coolant concentration	
	Antifreeze solution	Water
-15 (5)	35%	65%
-25 (-13)	40%	60%
-35 (-31)	50%	50%
-45 (-49)	60%	40%

G050C01A-AAT

To Check the Coolant Level

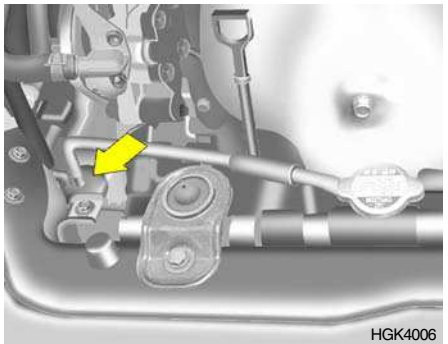

The coolant level can be seen on the side of the plastic coolant reservoir. The level of the coolant should be between the "L" and "F" lines on the reservoir when the engine is cool. If the level is below the "L" mark, add engine coolant to bring it up between "L" and "F". If the level is low, inspect for coolant leaks and recheck the fluid level frequently. If the level drops again, visit your Hyundai dealer for an inspection and diagnosis of the reason.

G050D02A-AAT

To Change the Engine Coolant

The engine coolant should be changed at those intervals specified in the vehicle maintenance schedule in Section 5.

CAUTION:
Engine coolant can damage the finish of your car. If you spill engine coolant on the car, wash it off thoroughly with clean water.

1. Park the car on level ground, set the parking brake and remove the radiator cap when cool.
2. Be sure your drain receptacle is in place. Open the drain cock on the radiator. Allow all the engine coolant to drain from the cooling system, then securely close the drain cock.
3. Check Section 9 for the capacity of the cooling system in your car. Then, following the manufacturer's directions on the engine coolant container, add the appropriate quantity of engine coolant to the radiator.

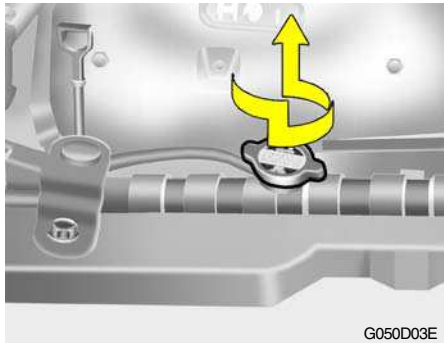

4. Turn the radiator cap counterclockwise without pressing down on it, until it stops. This relieves any pressure remaining in the cooling system. And remove the radiator cap by pushing down and turning counterclockwise.
   Now fill the radiator with clean demineralized or distilled water. Continue to add clean demineralized or distilled water in small quantities until the fluid level stays up in the radiator neck.

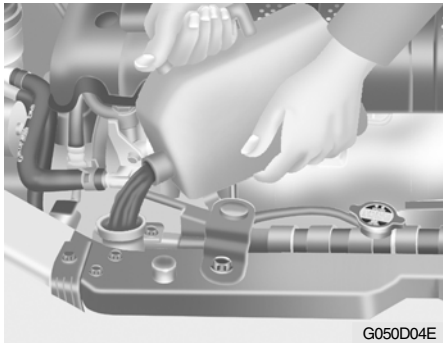

5. Start the engine, top off the radiator with water and then add engine coolant to the reservoir until the level is between "L" and "F".
6. Replace the radiator and reservoir caps and check to be sure the drain cocks are fully closed and not leaking.

WARNING:
The cooling fan is controlled by engine coolant temperature and may sometimes operate even when the engine is not running. Use extreme caution when working near the blades of the coolant fan so that you are not injured by a rotating fan blade. As the engine coolant temperature decreases, the fan will automatically shut off. This is a normal condition.

CHANGING THE AIR CLEANER FILTER

G070A01E-AAT

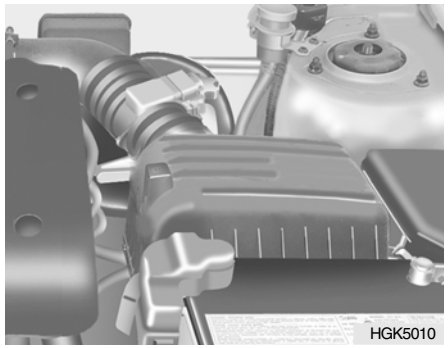

To change the filter, unsnap the clips around the cover. When this is done, the cover can be lifted off, the old filter removed and the new filter put in its place. Genuine Hyundai Replacement Parts are recommended.

CAUTION:

- **Operating your vehicle without a proper air cleaner filter in place can result in excessive engine wear.**
- **When removing the air cleaner filter, be careful that dust or dirt does not enter the air intake. These may result in damage to the air cleaner filter.**

WINDSHIELD WIPER BLADES

G080A03A-AAT

The wiper blades should be carefully inspected from time to time and cleaned to remove accumulations of road film or other debris. To clean the wiper blades and arms, use a clean sponge or cloth with a mild soap or detergent and water. If the wipers continue to streak or smear the glass, replace them with Genuine Hyundai Replacement Parts or their equivalent.

CAUTION:

- **Do not operate the wipers on dry glass. This can result in more rapid wear of the wiper blades and may scratch the glass.**
- **Keep the blade rubber out of contact with petroleum products such as engine oil, gasoline etc.**
- **When the wiper blade is freezed in winter or the washer fluid reservoir is empty, the wiper may not operate for ten minutes.**
  This isn't a mechanical trouble but the function protecting the wiper by operating circuit breaker inside of the wiper motor.

G080B01GK-GAT

Replacing the Wiper Blades

To remove the wiper blade

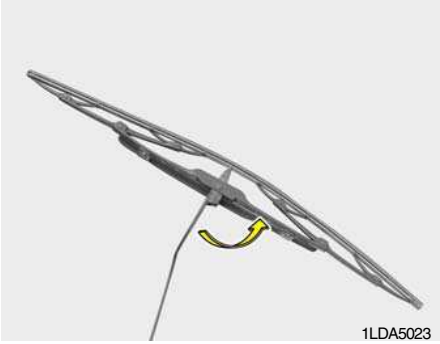

1. Raise the wiper arm and turn the wiper blade assembly to expose the plastic locking clip.

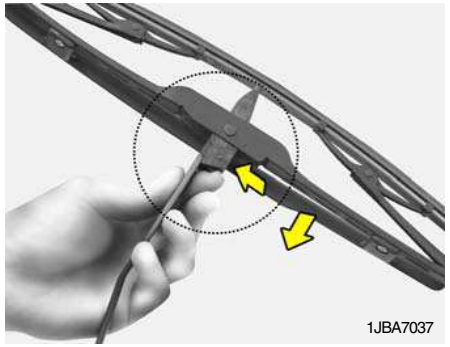

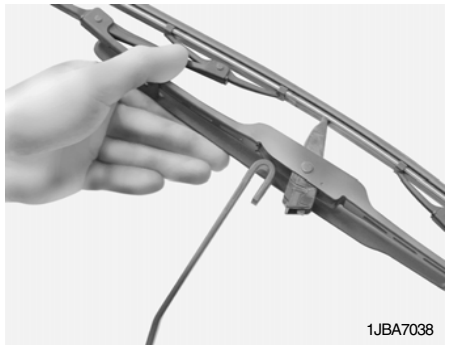

2. Compress the clip and slide the blade assembly downward.
3. Lift it off the arm.

To install the wiper blade

Install the blade assembly in the reverse order of removal.

FILLING THE WASHER RESERVOIR

G090A03A-GAT

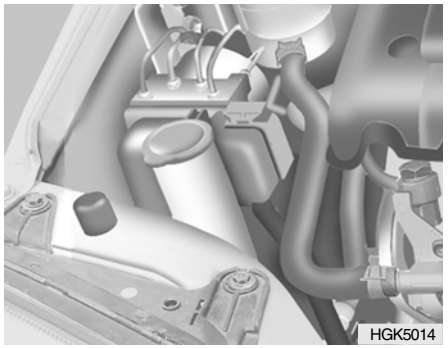

The washer fluid reservoir supplies fluid to the windshield washer system.

A good quality washer fluid should be used to fill the washer reservoir. The fluid level should be checked more frequently during inclement weather or whenever the washer system is in more frequent use.

The capacity of the washer reservoir is 3.0 liters (3.2 U.S. quarts).

CAUTION:

- **Radiator antifreeze (engine coolant) should not be used in the washer system because it will damage the car's finish.**
- **The washer should not be operated if the washer reservoir is empty. This can damage the washer fluid pump.**
- **In areas where water freezes in winter, use windshield washer antifreeze.**

WARNING:

- **Windshield washer fluid agents contain some amounts of alcohol and can be flammable under certain circumstances. Do not allow sparks or flame to contact the washer fluid or the washer fluid reservoir. Damage to the vehicle or its occupants could occur.**
- **Windshield washer fluid is poisonous to humans and animals. Do not drink windshield washer fluid. Serious injury or death could occur.**

CHECKING THE TRANSAXLE OIL (MANUAL)

G100A01MC-GAT

Transaxle lubricant in the manual transaxle should be checked at those intervals specified in the vehicle maintenance schedule in Section 5.

WARNING:
It is always better to check the transaxle oil level when the engine is cool or cold. If the engine is hot, you should exercise great caution to avoid burning yourself on hot engine or exhaust parts.

NOTE:
It is recommended that the manual transaxle fluid should be checked by an authorized Hyundai dealer.

CHECKING THE TRANSAXLE FLUID (AUTOMATIC)

G110A01MC-AAT

Transaxle fluid in the automatic transaxle should be checked at those intervals specified in the vehicle maintenance schedule in Section 5.

NOTE:
Automatic transaxle fluid is basically a red color. As driving distance increases, the fluid color turns darkish red gradually. It is normal condition and you should not judge the need to replace based upon the changing color.
You must replace the automatic transaxle fluid in accordance with intervals specified in the vehicle maintenance schedule in section 5.

WARNING:
The transaxle fluid level should be checked when the engine is at normal operating temperature. This means that the engine, radiator, exhaust system etc., are very hot. Exercise great care not to burn yourself during this procedure.

G110D03Y-AAT

To Check the Transaxle Fluid Level

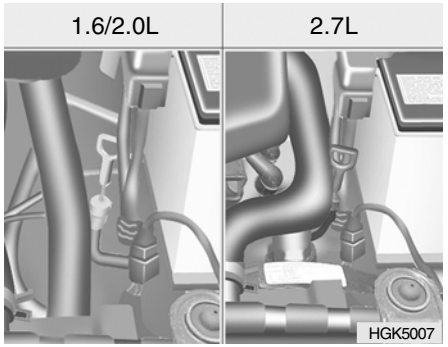

The automatic transaxle fluid level should be checked regularly.

Keep the vehicle on level ground with the parking brake applied and check the fluid level according to the following procedure.

1. Place the shift lever in N(neutral) position and confirm the engine is running at idle speed.
2. After the transaxle is warmed up sufficiently [fluid temperature 70~80°C (158~176°F)], for example by 10 minutes usual driving, move the shift lever through all positions then place the shift lever in N(neutral) or P(park) position.

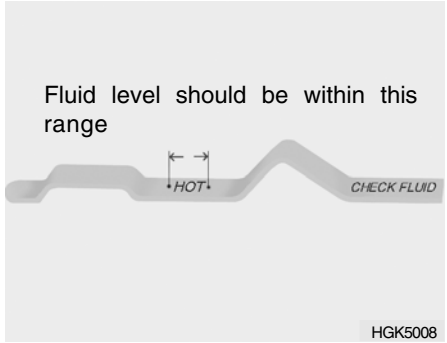

3. Confirm if the fluid level is in the "HOT" range on the level gauge. If the fluid level is lower, add the specified fluid from the fill hole. If the fluid level is higher, drain the fluid from the drain hole.
4. If the fluid level is checked in cold condition[fluid temperature 20~30°C (68~86°F)], add the fluid to the "COLD" line and then recheck the fluid level according to the above step 2.

WARNING:
The cooling fan is controlled by engine coolant temperature and may sometimes operate even when the engine is not running. Use extreme caution when working near the blades of the cooling fan, so that you are not injured by a rotating fan blade. As the engine coolant temperature decreases, the fan will automatically shut off. This is a normal condition.

CHECKING THE BRAKES

G120A01A-AAT

CAUTION:
Because brakes are essential to the safe operation of the car, it is suggested that they be checked and inspected by your Hyundai dealer. The brakes should be checked and inspected for wear at those intervals specified in the vehicle maintenance schedule in Section 5.

G120B01A-AAT

Checking the Brake Fluid Level

WARNING:
Use caution when handling brake fluid. It can damage your vision if it gets into your eyes. It will also damage your vehicle's paint if spilled on it and not removed immediately.

G120D01A-AAT

To Check the Fluid Level

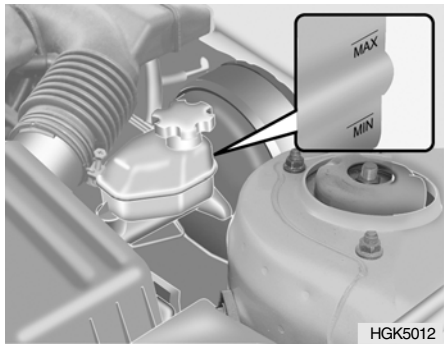

The fluid level in the brake fluid reservoir should be checked periodically. The level should be between the "MIN" and "MAX" marks on the side of the reservoir. If the level is at or below the "MIN" mark, carefully add fluid to bring it up to "MAX". Do not overfill.

G120E02A-AAT

Adding Brake Fluid

WARNING:
Handle brake fluid carefully. It can damage your vision if it gets into your eyes. Use only DOT 3 or DOT 4 specification fluid from a sealed container. Do not allow the fluid can or reservoir to remain open any longer than required. This will avoid entry of dirt and moisture which can damage the brake system and cause improper operation.

To add brake fluid, first wipe away any dirt then unscrew the fluid reservoir cap. Slowly pour the recommended fluid into the reservoir. Do not overfill. Carefully replace the cap on the reservoir and tighten.

CHECKING THE CLUTCH FLUID

G130A01S-AAT

(Manual Transaxle) To Check the Clutch Fluid

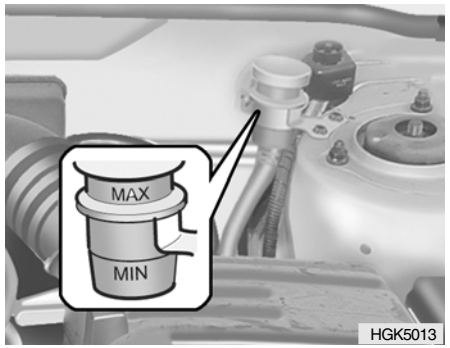

The clutch fluid level in the master cylinder should be checked when performing other under hood services. The system should be checked for leakage at the same time. Check to make certain that the clutch fluid level is always between the "MAX" and "MIN" level markings on the fluid reservoir. Fill as required. Fluid loss indicates a leak in the clutch system which should be inspected and repaired immediately. Consult your Hyundai dealer.

AIR CONDITIONING CARE

G140A01A-AAT

Keeping the Condenser Clean

The air conditioning condenser (and engine radiator) should be checked periodically for accumulation of dirt, dead insects, leaves, etc. These can interfere with maximum cooling efficiency. When removing such accumulations, brush or hose them away carefully to avoid bending the cooling fans.

G140B01A-AAT

Checking the Air Conditioning Operation

1. Start the engine and let it run at fast idle for several minutes with the air conditioning set at the maximum cold setting.
2. If the air coming out of the in-dash vents is not cold, have the air conditioning system inspected by your Hyundai dealer.

CAUTION:
Running the air conditioning system for extended periods of time with a low refrigerant level may damage the compressor.

G140C01A-AAT

Lubrication

To lubricate the compressor and the seals in the system, the air conditioning should be run for at least 10 minutes each week. This is particularly important during cool weather when the air conditioning system is not otherwise in use.

CHANGING THE CLIMATE CONTROL AIR FILTER

G145A03GK-GAT

(In front of blower unit) (If installed)

The climate control air filter is located in front of the blower unit behind the glove box.
It helps to decrease the amount of pollutants entering the car.

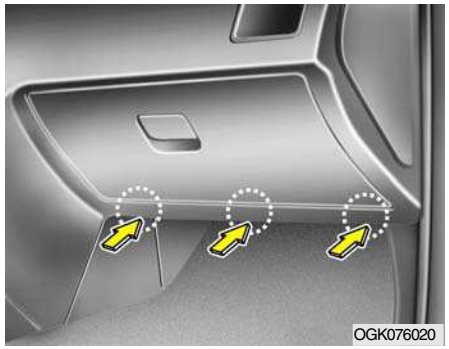

1. Remove the mounting screws on the downside of the glove box.

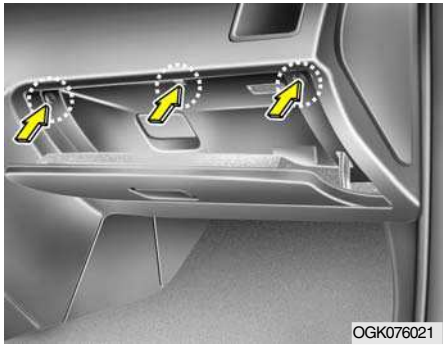

2. Open the glove box and remove the mounting screws on the upside of the glove box.

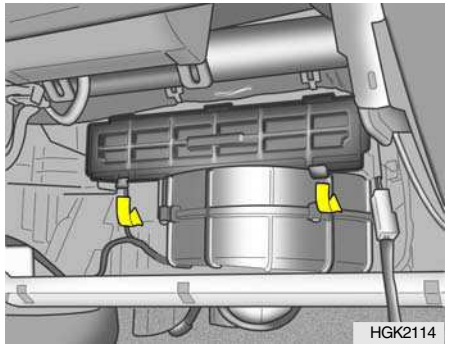

3. Remove the filter cover.

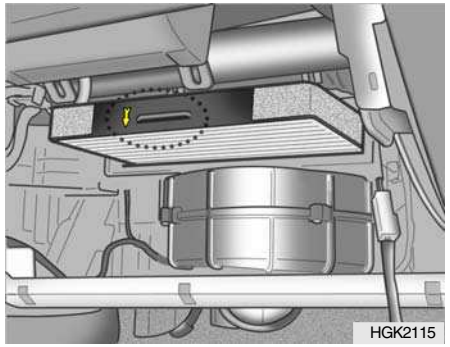

4. Replace the climate control air filter with a new one.
5. Installation is the reverse order of disassembly.

CAUTION:
Be sure to install the climate control air filter in the direction of the arrow sign. Otherwise, it may cause noise or deterioration.

CHECKING AND REPLACING FUSES

G200A01GK-AAT

Replacing a Fusible Link

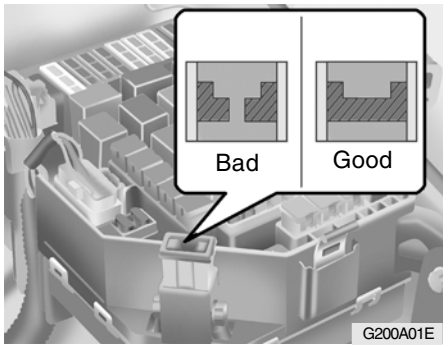

A fusible link will melt if the electrical circuits from the battery are ever overloaded, thus preventing damage to the entire wiring harness. (This could be caused by a short in the system drawing too much current.) If this ever happens, have a Hyundai dealer determine the cause, repair the system and replace the fusible link. The fusible links are located in a relay box(1.6L/2.0L) or below the positive (+) post cover of the battery (2.7L) for easy inspection.

CAUTION:
When replacing a fusible link, never use anything but a new fusible link with the same or lower amperage rating. Never use a piece of wire or a higher-rated fusible link. This could result in serious damage and create a fire hazard.

G200B02A-AAT

Replacing Accessory Fuse

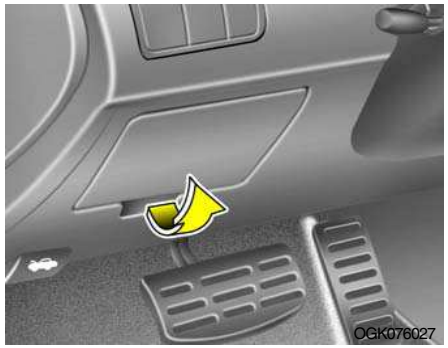

The fuse box for the lights and other electrical accessories will be found low on the dashboard on the driver's side. Inside the box you will find a list showing the circuits protected by each fuse.

If any of your car's lights or other electrical accessories stop working, a blown fuse could be the reason. If the fuse has burned out, you will see that the metal strip inside the fuse has burned through. If you suspect a blown fuse, follow this procedure:

1. Turn off the ignition and all other switches.
2. Open the fuse box and examine each fuse. Remove each fuse by pulling it toward you (a small "fuse puller" tool is contained in the fuse box to simplify this operation).
3. Be sure to check all other fuses even if you find one that appears to have burned out.

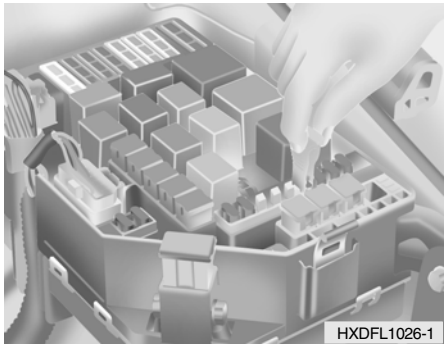

4. Replace the blown fuse by pressing a new fuse of the same rating into place. The fuse should be a snug fit. If it is not, have the fuse clip repaired or replaced by a Hyundai dealer. If you do not have a spare fuse, you may be able to borrow a fuse of the same or lower rating from an accessory you can temporarily get along without (the radio or cigarette lighter, for example). Always remember to replace the borrowed fuse.

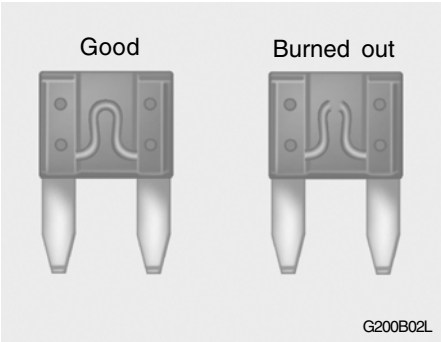

CAUTION:
A burned-out fuse indicates that there is a problem in the electrical circuit. If you replace a fuse and it blows as soon as the accessory is turned on, the problem is serious and should be referred to a Hyundai dealer for diagnosis and repair. Never replace a fuse with anything except a fuse with the same or a lower amperage rating. A higher capacity fuse could cause damage and create a fire hazard.

NOTE:
See page 6-37 for the fuse panel descriptions.

CHECKING THE BATTERY

G210A01A-AAT

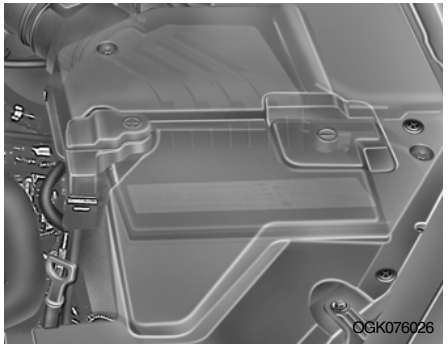

WARNING:
Batteries can be dangerous! When working with batteries, carefully observe the following precautions to avoid serious injuries.

The fluid in the battery contains a strong solution of sulfuric acid, which is poisonous and highly corrosive. Be careful not to spill it on yourself or the car. If you do spill battery fluid on yourself, immediately do the following:

- o If battery fluid is on your skin, flush the affected areas with water for at least 15 minutes and then seek medical assistance.
- o If battery fluid is in your eyes, rinse out your eyes with water and get medical assistance as soon as possible. While you are being driven to get medical assistance, continue to rinse your eyes by using a sponge or soft cloth saturated with water.
- o If you swallow battery fluid, drink a large quantity of water or milk followed by milk of magnesia, eat a raw egg or drink vegetable oil. Get medical assistance as soon as possible.

While batteries are being charged (either by a battery charger or by the vehicle's alternator), they produce explosive gases. Always observe these warnings to prevent injuries from occurring:

- o Charge batteries only in a well ventilated area.
- o Do not permit flames, sparks or smoking in the area.
- o Keep children away from the area.

G210B01Y-GET

Checking the Battery

Keep the battery clean. Any evidence of corrosion around the battery posts or terminals should be removed using a solution of household baking soda and warm water. After the battery terminals are dry, cover them with a light coating of grease.

WARNING:

Always read the following instructions carefully when handling a battery.

Keep lighted cigarettes and all other flames or sparks away from the battery.

Hydrogen, which is a highly combustible gas, is always present in battery cells and may explode if ignited.

Keep batteries out of the reach of children because batteries contain highly corrosive SULFURIC ACID. Do not allow battery acid to contact your skin, eyes, clothing or paint finish.

If any electrolyte gets into your eyes, flush your eyes with clean water for at least 15 minutes and get immediate medical attention. If possible, continue to apply water with a sponge or cloth until medical attention is received.

If electrolyte gets on your skin, thoroughly wash the contacted area.

If you feel a pain or a burning sensation, get medical attention immediately.

Wear eye protection when charging or working near a battery.

Always provide ventilation when working in an enclosed space.

- When lifting a plastic-cased battery, excessive pressure on the case may cause battery acid to leak, resulting in personal injury. Lift with a battery carrier or with your hands on opposite corners.
- Never attempt to charge the battery when the battery cables are connected.
- The electrical ignition system works with high voltage.
  Never touch these components with the engine running or the ignition switched on.

CHECKING ELECTRIC COOLING FANS

G220A01A-AAT

WARNING:

The cooling fan is controlled by engine coolant temperature and may sometimes operate even when the engine is not running. Use extreme caution when working near the blades of the coolant fan, so that you are not injured by a rotating fan blade. As the coolant temperature decreases the fan will automatically shut off. This is a normal condition.

G220B01A-AAT

Checking Engine Cooling Fan

The engine coolant fan should come on automatically if the engine coolant temperature is high.

G220C01A-AAT

Checking Condenser Cooling Fan

The condenser coolant fan should come on automatically whenever the air conditioning is in operation.

POWER STEERING FLUID LEVEL

G230A01GK-GAT

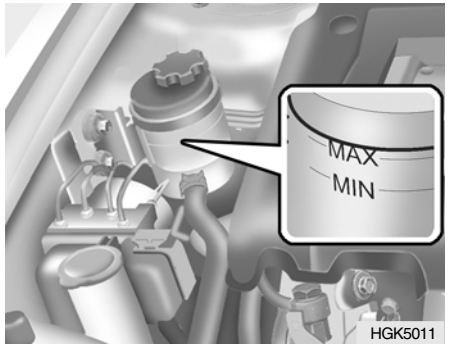

The power steering fluid level should be checked regularly.
To check the power steering fluid level, be sure the ignition is "OFF", then check to make certain that the power steering fluid level is between the "MAX" and "MIN" level markings on the fluid reservoir.

NOTE:

- **Grinding noise from the power steering pump may be heard immediately after the engine is started in extremely cold conditions (below - 20°C). If the noise stops during warm up, there is no abnormal function in the system. It is due to a power steering fluid characteristic in extremely cold conditions.**
- **Do not start the engine when the power steering oil reservoir is empty.**

G240A01A-AAT

Power Steering Hoses

It is suggested that you check the power steering hose connections for fluid leakage daily. The power steering hoses should be replaced if there is severe surface cracking, pulling, scuffing or worn spots. Deterioration of the hose could cause premature failure.

HEADLIGHT AIMING ADJUSTMENT

G290A02GK-GAT

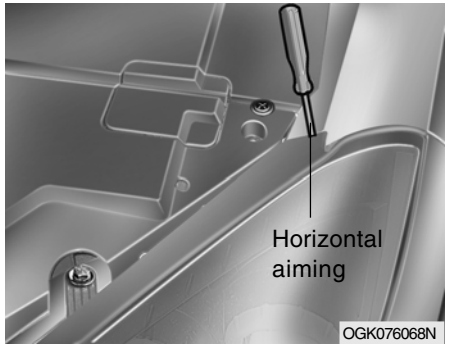

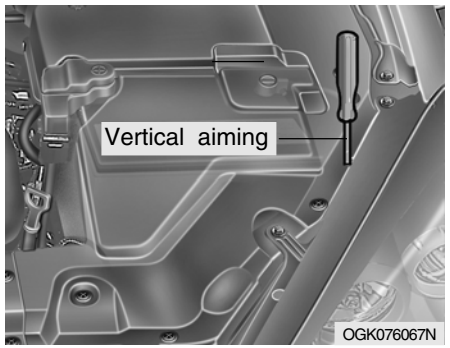

Before performing aiming adjustment, make sure of the following.

1. Keep all tires inflated to the correct pressure.
2. Place the vehicle on level ground and press the front bumper & rear bumper down several times. Place vehicle at a distance of 3m (118 in.) from the test wall.
3. See that the vehicle is unloaded (except for full levels of coolant, engine oil and fuel, and spare tire, jack, and tools).
4. Clean the head light lenses and turn on the headlights.
5. Open the hood.
6. Draw the vertical line (through the center of each headlight beam pattern) and the horizontal line (through the center of each headlight beam pattern) on the aiming screen.
   And then, draw a parallel line at 30 mm (1.18 in.) under the horizontal line.
7. Adjust each cut-off line of the low beam to the parallel line with a phillips screwdriver - VERTICAL AIMING.
8. Adjust each cut-off line of the low beam to each vertical line with a phillips screwdriver - HORIZONTAL AIMING.

G290B02GK-GAT

Adjustment After Headlight Assembly Replacement

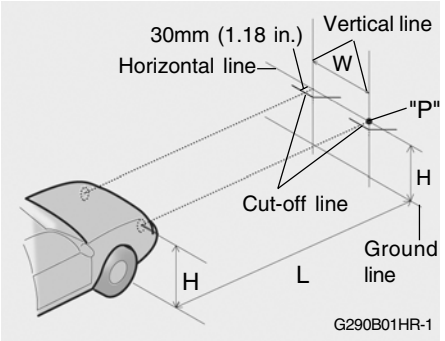

If the vehicle has had front body repair and the headlight assembly has been replaced, the headlight aiming should be checked using an aiming screen as shown in the illustration. Turn on the headlight switch.

1. Adjust headlights so that main axis of light is parallel to center line of the body and is aligned with point "P" shown in the illustration.
2. Dotted lines in the illustration show the center of headlights.

SPECIFICATION:

"H"
Horizontal center line of headlights from ground:
Low Beam: 690 mm (27.2 in.)
High Beam: 674 mm (26.5 in.)

"W"
Distance between each headlight center :
Low Beam: 1,336 mm (52.6 in.)
High Beam: 1,098 mm (43.2 in.)

"L"
Distance between the headlights and the wall that the lights are tested against : 3,000 mm (118 in.)

REPLACEMENT OF LIGHT BULBS

G260A01MC-AAT

Before attempting to replace a light bulb, be sure the switch is turned to the "OFF" position.
The next paragraph shows how to reach the light bulbs so they may be changed. Be sure to replace the burned-out bulb with one of the same number and wattage rating.
See page 6-36 for the wattage descriptions.

CAUTION:

- **Keep the lamps out of contact with petroleum products, such as oil, gasoline, etc.**
- **If you don't have necessary tools, the correct bulbs and the expertise, consult your authorized Hyundai dealer.**

G270A01GK-AAT

Headlight and Front Turn Signal Light

1. Allow the bulb to cool. Wear eye protection.
2. Open the engine hood.
3. Always grasp the bulb by its plastic base, avoid touching the glass.

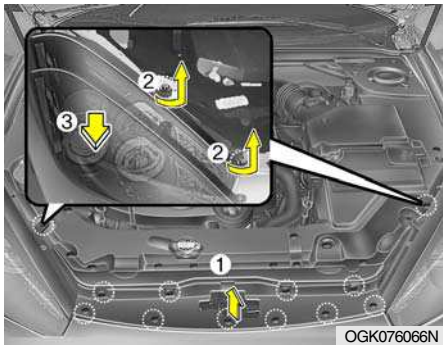

OGK076066N

4. Disconnect the power cord from the bulb base in the back of the headlight.

OGK076047

5. Turn the plastic cover counterclockwise and remove it.

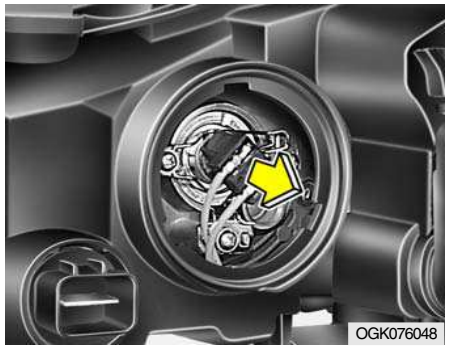
OGK076048

6. Disconnect the connector from the bulb base in the back of the headlight.

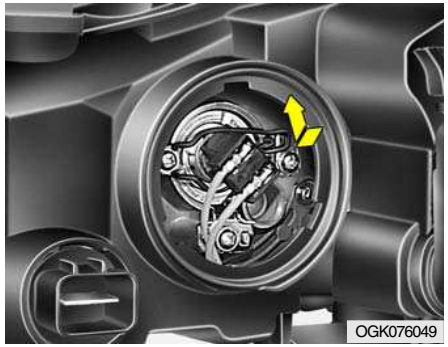
OGK076049

7. Push the bulb spring to remove the headlight bulb.

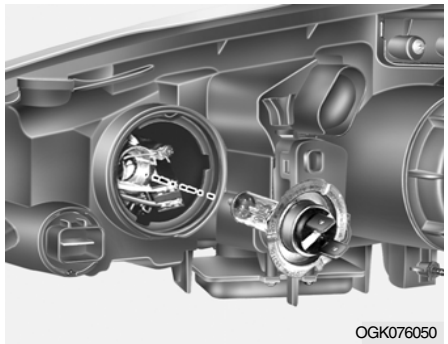
OGK076050

8. Remove the protective cap from the replacement bulb and install the new bulb by matching the plas-

tic base with the headlight hole. Reattach the bulb spring and reconnect the connector.

9. Use the protective cap and carton to promptly dispose of the old bulb.
10. Check for proper headlight aim.

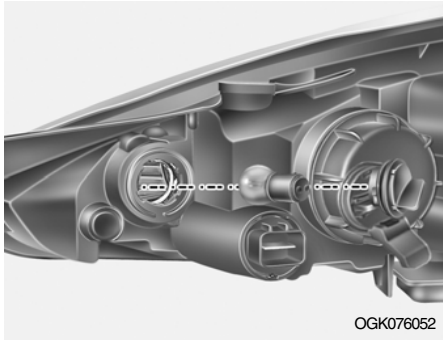
OGK076052

11. To replace the front turn signal light bulb, remove from the bulb holder and install the new bulb.

G270A03O

WARNING:
This halogen bulb contains gas under pressure and if impacted could shatter, resulting in flying fragments. Always wear eye protection when servicing the bulb. Protect the bulb against abrasions or scratches and against liquids when lighted. Turn the bulb on only when installing in a headlight. Replace the headlight if damaged or cracked. Keep the bulb out of the reach of children and dispose of the used bulb with care.

G270K01CM-GAT

Front Fog Light (If Installed)

NOTE:
It is recommended that the front fog light bulb be replaced by an authorized Hyundai dealer.

G270B01GK-GAT

Rear Combination Light (Without woofer speaker)

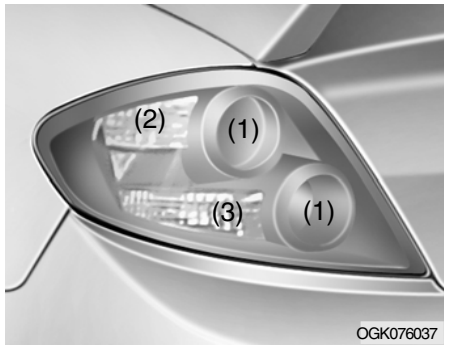

OGK076037

1. Open the tail gate.

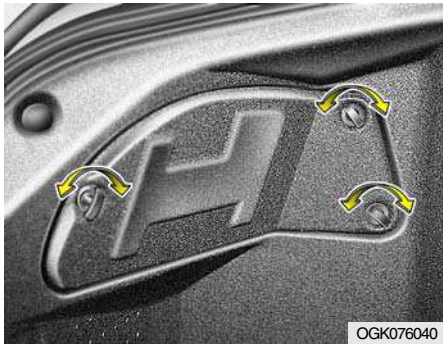

2. To remove the cover of the rear luggage trim, turn the knob by hand to the counterclockwise.

3. Remove the nut (8mm) with a spanner.

4. To detach the rear combination light hit it strongly by hand.

5. To replace the rear combination light (stop/tail light, turn signal light, back-up light) take it out from the bulb holder by turning it counterclockwise.
6. Install the new bulb.

   (1) Stop/Tail light
   (2) Back-up light
   (3) Turn signal light

G275B01GK-GAT

Rear Combination Light (With woofer speaker)

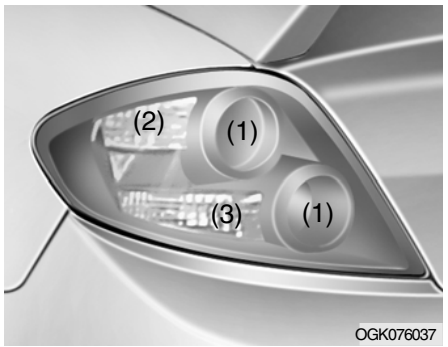

OGK076037

1. Open the tail gate.

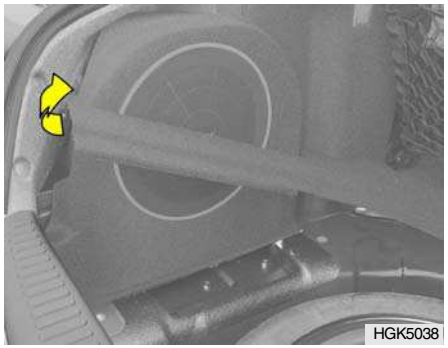
HGK5038

2. Take off the luggage board.

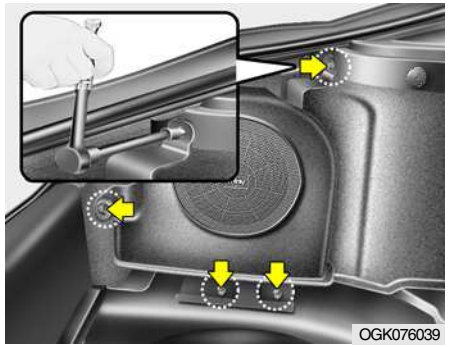
OGK076039

3. Extract the mounting screws (10mm) around the woofer speaker with a spanner.
4. Disconnect the power cord from the woofer speaker.

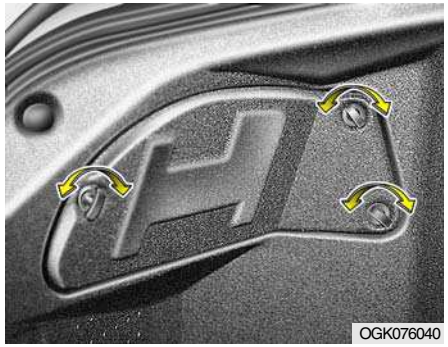
OGK076040

5. To remove the cover of the rear luggage trim, turn the knob by hand to the counterclockwise.

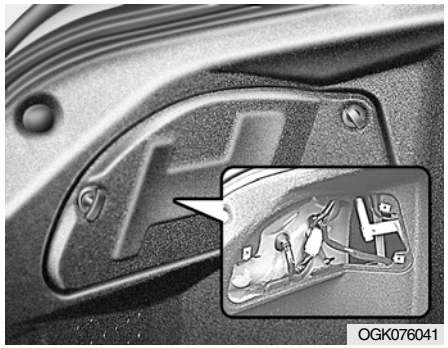
OGK076041

6. Remove the nut (8mm) with a wrench.

7. To detach the rear combination light hit it strongly by hand.

8. To replace the rear combination light (stop/tail light, back-up light, turn signal light), take it out from the bulb holder by turning it counter-clockwise.
9. Install the new bulb.

G270F02A-GAT

Rear Fog Light (If Installed)

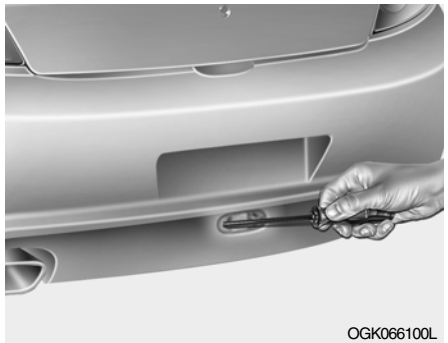

1. Remove the mounting screws of the rear fog light cover with a phillips screwdriver.
2. Disconnect the power cord by turning the bulb cover counterclockwise and take the bulb out from the bulb cover by turning it clockwise.
3. Replace with a new bulb.

G270C01GK-AAT

Luggage Compartment Light

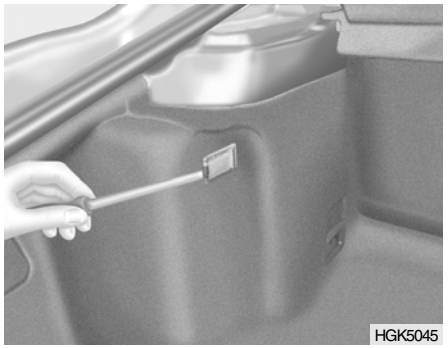

1. Open the tail gate.
2. Remove the cover with a flat-blade screwdriver.

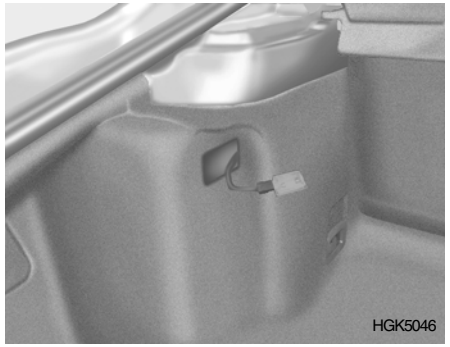

3. Disconnect the power cord.

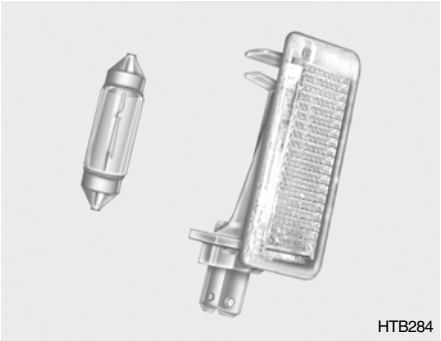

4. Replace with a new bulb.

G270G01GK-AAT

Map Light

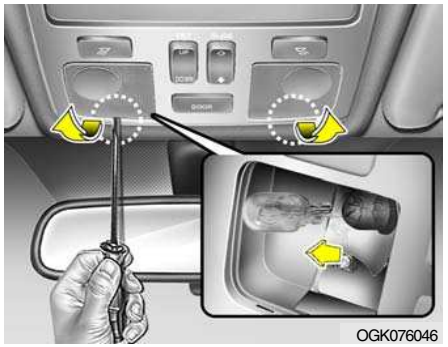

1. Remove the cover with a flat-blade screwdriver.
2. Replace with a new bulb.

G270H01GK-GAT

Glove Box Illuminated Light

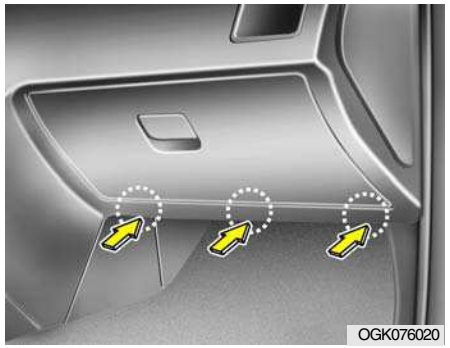

1. Remove the mounting screws on the downside of the glove box.

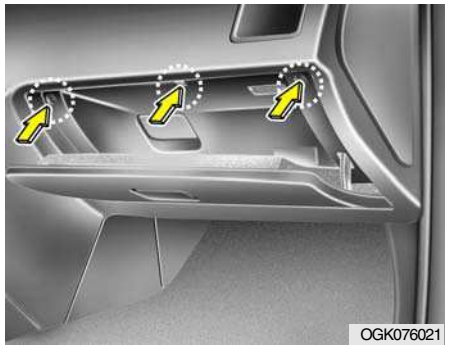

2. Open the glove box and remove the mounting screws on the upside of the glove box.

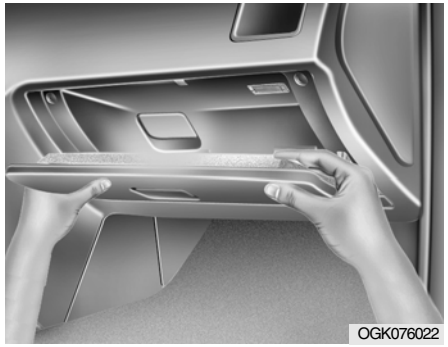

3. Remove the glove box by pulling strongly.

CAUTION:
Be careful not to damage the glove box when pulling the glove box.

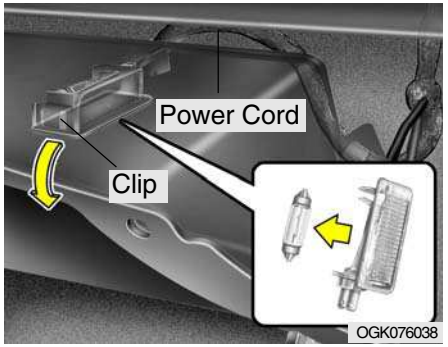

4. Disconnect the power cord.
5. Remove the glove box illuminated light by pushing the clip.
6. Replace with a new bulb.

G270E02A-GAT

Side Repeater (If Installed)

NOTE:

It is recommended that the side repeater bulb be replaced by an authorized Hyundai dealer.

BULB WATTAGE

G280A04GK-GAT

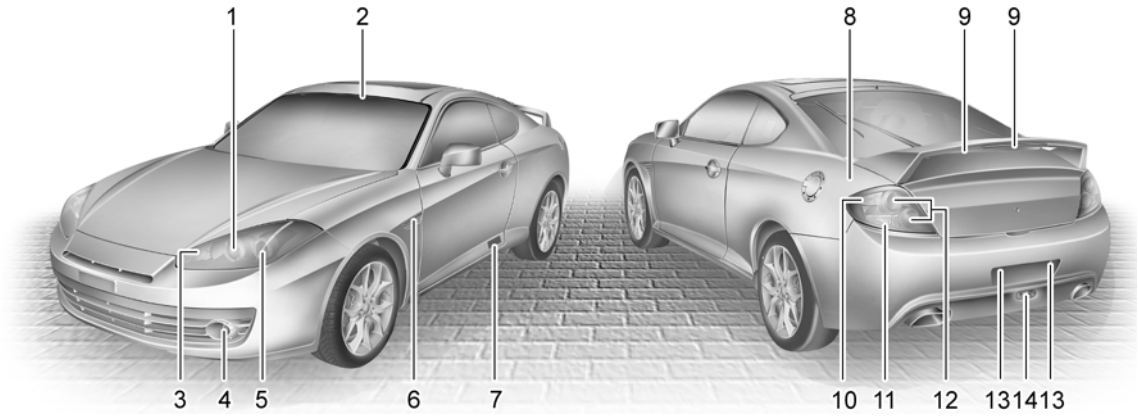

OGK066009L

No.	Part Name	Wattage	Socket type	No.	Part Name		Wattage	Socket type
1	Head Light (Low)	55	PX 26d	8	Luggage Compartment Light		5	S8.5/8.5
	Front Position Light	5	W2.1X9.5d	9	High Mounted Stop Light	With spoiler	2.4 (LED)	N/A
2	Map Light	10	W2.1×9.5D			Without spoiler	3.5 (LED)	-
3	Front Turn Signal Light	21	BAU15s	10	Rear Combination	Back-up Light	16	W2.1X9.5d
4	Front Fog Light (If installed)	51	P22d	11		Turn Signal Light	21	BA15s
5	Head Light (High)	55	PX 26d	12		Stop/Tail Light	21/5	BAY15d
6	Side repeater light (If installed)	5	W2.1X9.5d	13	License Plate Light		5	W2.1X9.6d
7	Front Door Edge Warning Light	5	W2.1X9.5d	14	Rear Fog Light (If installed)		21	BA15s

FUSE PANEL DESCRIPTION

G200C02GK-GAT

Engine Compartment

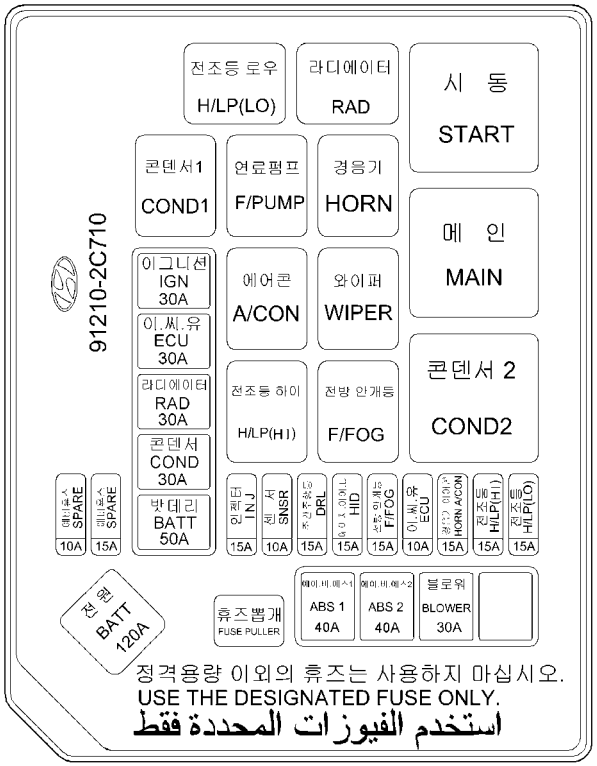

HGK4005

NOTE:

Not all fuse panel descriptions in this manual may be applicable to your vehicle. It is accurate at the time of printing. When you inspect the fuse box on your vehicle, refer to the fuse box label.

DESCRIPTION	FUSERATING	PROTECTED COMPONENTS
BATT	120A	Generator(1.6L/2.0L)
BATT	50A	BCM BOX(Tail lamp relay,Power connector,Fuse(2,7,12,13,19,20,24))
COND	30A	Condenser fan relay
RAD	30A	Radiator fan relay
ECU	30A	Engine control relay, Fuel pump relay, A/T control relay, Generator,ECM(1.6L/2.7L),PCM(2.0L)
IGN	30A	Ignition switch,Start relay
ABS 1	40A	ABS/ESP control module,ESP Air bleeding connector
ABS 2	40A	ABS/ESP control module,ESP Air bleeding connector
BLOWER	30A	Blower relay
INJ	15A	Injector
SNSR	10A	Oxygen sensor,Camshaft position sensor, Idle speed control actuator
DRL	15A	DRL control module
F/FOG	15A	Front fog lamp relay
ECU	10A	TCM(2.7L),ECM(2.7L/1.6L)
HORN,A/CON	15A	Horn relay,A/C relay
H/LP (HI)	15A	Head lamp relay(High)
H/LP (LO)	15A	Head lamp relay(Low)

G200D02GK-GAT

Inner Panel

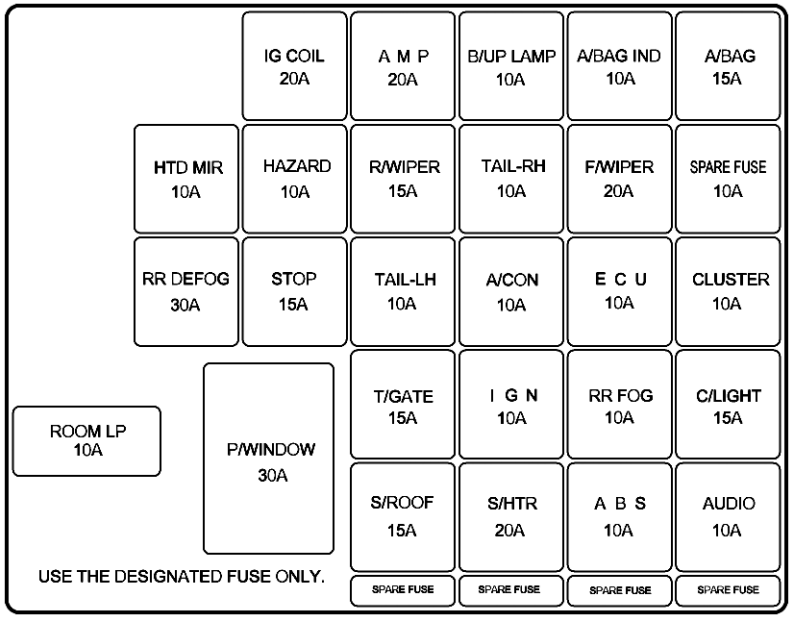

OGK066010L

DESCRIPTION	FUSERATING	PROTECTED COMPONENTS
IG COIL	20A	Ignition coil(1.6l/2.7L), Electronic chrome mirror
AMP	20A	AMP
B/UP LAMP	10A	Back-up lamp switch,Transaxle range switch,Cruise control module,Stop lamp switch
A/BAG IND	10A	Instrument cluster (A/BAG IND.)
A/BAG	15A	SRS control module
HTD MIR	10A	Mirror defogger
HAZARD	10A	Hazard relay
R/WIPER	15A	Rear wiper motor,Rear intermittent wiper relay
TAIL-RH	10A	Right tail lamps,Glove box lamp
F/WIPER	20A	Front wiper motor,Front wiper relay
RR DEFOG	30A	Defogger relay
STOP	15A	Stop lamp switch,Burglar alarm horn relay,Folding/Unfolding relay
TAIL-LH	10A	Left tail lamps
A/CON	10A	A/C control module, Blower relay
ECU	10A	ECM, Multi gauge unit, TCM, Vehicle speed sensor
CLUSTER	10A	Instrument cluster (Power), Per-excitation resister, DRL Control module,Generator
ROOM LP	10A	Room lamp,Clock,Audio,Data link connector,Multi gauge unit
P/WINDOW	30A	Power window relay
T/GATE	15A	Trunk lid switch
IGN	10A	AQS sensor,Head lamp relay,DRL Control module
RR FOG	10A	Rear fog lamp
C/LIGHT	15A	Cigarette lighter,Outside mirror switch
S/ROOF	15A	Sunroof,Power door lock/Unlock relay
S/HTR	20A	Seat warmer
ABS	10A	ESP/ABS control module
AUDIO	10A	Audio,Digital clock

EMISSION CONTROL SYSTEM

Emission Control System 7-2
Catalytic Converter 7-3

7

EMISSION CONTROL SYSTEMS

H010A01A-GAT

(If Installed)

Your Hyundai is equipped with an emission control system to meet all requirements of the Emission prohibition rules of your province.
There are three emission control systems which are as follows.

(1) Crankcase emission control system
(2) Evaporative emission control system
(3) Exhaust emission control system

In order to assure the proper function of the emission control systems, it is recommended that you have your car inspected and maintained by an authorized Hyundai dealer in accordance with the maintenance schedule in this manual.

H010B01F-GAT

1. Crankcase Emission Control System

The positive crankcase ventilation system is employed to prevent air pollution caused by blow-by gases being emitted from the crankcase. This system supplies fresh air to the crankcase through the air cleaner. Inside the crankcase, the fresh air mixes with blow-by gases, then passes through the PCV valve into the induction system.

H010C01F-GAT

2. Evaporative Emission Control System (If Installed)

The evaporative emission control system is designed to prevent fuel vapors from escaping into the atmosphere.

Canister

While the engine is inoperative, fuel vapors generated inside the fuel tank are absorbed and stored in the canister. When the engine is running, the fuel vapors absorbed in the canister are drawn into the induction system through the purge control solenoid valve.

Purge Control Solenoid Valve

The purge control solenoid valve is controlled by the ECM; when the engine coolant temperature is low, and during idling, it closes, so that evaporated fuel is not taken into the engine. After engine warm-up, during ordinary driving, it opens so as to introduce evaporated fuel to the engine.

H010D01A-AAT

3. Exhaust Emission Control System

The exhaust emission control system is a highly effective system which controls exhaust emissions while maintaining good vehicle performace.

CATALYTIC CONVERTER

H020A01A-AAT

; For a Gasoline Engine

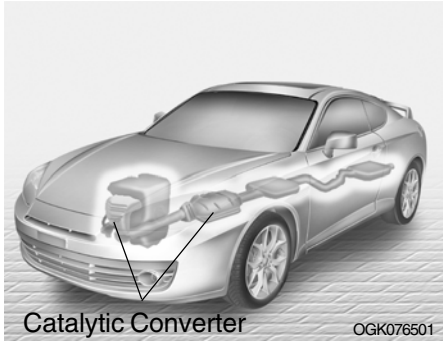

All Hyundai vehicles are equipped with a monolith type three-way catalytic converter to reduce the carbon monoxide, hydrocarbons and nitrogen oxides contained in the exhaust gas. Exhaust gases passing through the catalytic converter may cause it to operate at a very high temperature. The introduction of large amounts of unburned gasoline into the exhaust may cause the catalytic converter to overheat and create a fire hazard. This risk may be reduced by observing the following:

WARNING:

- **Use unleaded fuel only.**
- **Maintain the engine in good operating condition. Extremely high catalytic converter temperatures can result from improper operation of the electrical, ignition or multiport electronic fuel injection.**
- **If your engine stalls, pings, knocks, or is hard to start, have your Hyundai dealer inspect and repair the problem as soon as possible.**
- **Avoid driving with a very low fuel level. Running out of gasoline may cause the engine to misfire and result in damage to the catalytic converter.**
- **Avoid idling the engine for periods longer than 10 minutes.**
- **The vehicle should not be pushed or pulled to get started. This may cause the catalytic converter to overheat and create a fire hazard.**
- **Do not touch the catalytic converter or any other part of the exhaust system while the catalytic converter is hot. Shut off the engine, wait for at least one hour before touching the catalytic converter or any other part of the exhaust system.**
- **Remember that your Hyundai dealer is your best source of assistance.**
- **Do not stop your Hyundai over any combustible material such as grass, paper, leaves or rags. These materials might contact the hot catalytic converter and a fire might result.**

CONSUMER INFORMATION

Vehicle Identification Number (VIN) 8-2
Engine Number 8-2
Recommended Inflation Pressures 8-3
Snow Tires 8-4
Tire Chains 8-4
Tire Rotation 8-5
Tire Balancing 8-5
Tire Traction 8-5
When to Replace Tires 8-6
Spare Tire and Tools 8-6

8

2 VEHICLE IDENTIFICATION NUMBER (VIN)

I010A01A-GAT

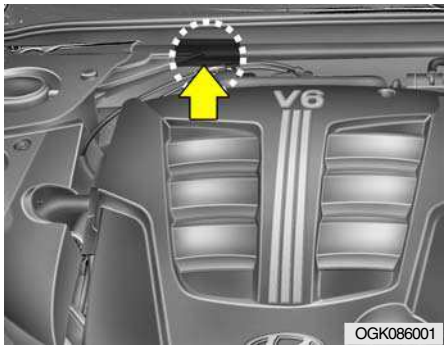

The vehicle identification number (VIN) is the number used in registering your car and in all legal matters pertaining to its ownership, etc.
It can be found on the identification plate attached to the engine side of the firewall between the engine and passenger compartment.

ENGINE NUMBER

I010B01A-AAT

1.6L

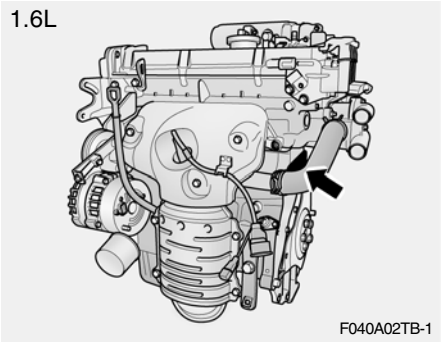

2.0L

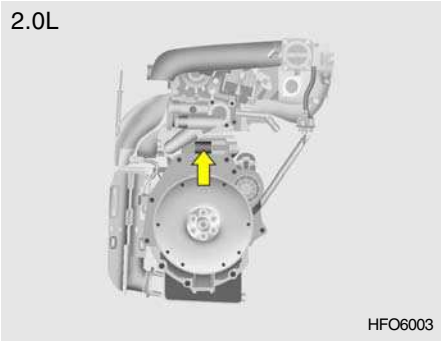

2.7L

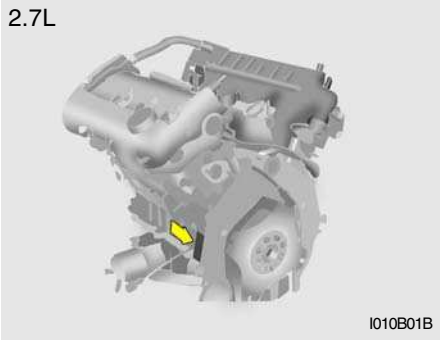

The engine number is stamped on the engine block as shown in the drawing.

TIRE

I020A01A-AAT

Tire Information

The tires supplied on your new Hyundai are chosen to provide the best performance for normal driving.

I030A02GK-AAT

Recommended Inflation Pressures

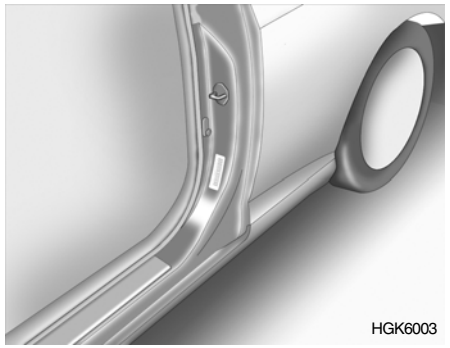

The tire label located on the driver's side of the center pillar outer panel gives the tire pressures recommended for your vehicle.

RIM SIZE	TIRE SIZE	PRESSURE, kPa (PSI)			
		NORMAL LOAD		MAXIMUM LOAD	
		FRONT	REAR	FRONT	REAR
6.0Jx15	195/65R15	210(30)	210(30)	210(30)	210(30)
6.5Jx16	205/55R16	210(30)	210(30)	230(33)	230(33)
7.0Jx17	215/45R17	220(32)	210(30)	240(35)	230(33)
4Tx16	T125/70R16	420(60)	420(60)	420(60)	420(60)

These pressures were chosen to provide the most satisfactory combination of ride comfort, tire wear and stability under normal conditions. Tire pressures should be checked at least monthly. Proper tire inflation pressures should be maintained for these reasons:

- o Lower-than-recommended tire pressures cause uneven tread wear and poor handling.
- o Higher-than-recommended tire pressures increase the chance of damage from impacts and cause uneven tread wear.

CAUTION:

Always observe the following:

- **o Check pressures when the tires are cold. That is, after the car has been parked for at least three hours and hasn't been driven more than 1.6 km or one mile since starting up.**
- **o Check the pressure of your spare tire each time you check the pressure of other tires.**

I040A01S-GAT

Snow Tires

If you equip your car with snow tires, they should be the same size and have the same load capacity as the original tires. Snow tires should be installed on all four wheels; otherwise, poor handling may result.
Snow tires should carry 28 kPa (4 psi) more air pressure than the pressure recommended for the standard tires on the tire label on the drive side center pillar outer panel, or up to the maximum pressure shown on the tire sidewall whichever is less.
Do not drive faster than 120 km/h (75 mph) when your car is equipped with snow tires.

I050A02GK-GAT

Tire Chains

Tire chains, if necessary, should be installed on the front wheels. Be sure that the chains are installed in accordance with the manufacturer's instructions. Refer to the following information.

Tire size	Snow Chain Thickness
195/65 R 15	Max. 15 mm
205/55 R 16	Max. 10 mm
215/45 R 17	Max. 10 mm

To minimize tire and chain wear, do not continue to use tire chains when they are no longer needed.

WARNING:

- **When driving on roads covered with snow or ice, drive at less than 30 km/h (20 mph).**
- **Use tire chains less than 10mm (0.39 in.) for 16" and 17" tires.**
- **Avoid sudden stop and turns.**
- **Tighten firmly to avoid contact with the verticle body, if you have noise caused by chaws contacting the body, remove the chains for damage protection.**

I060A02GK-GAT

Tire Rotation

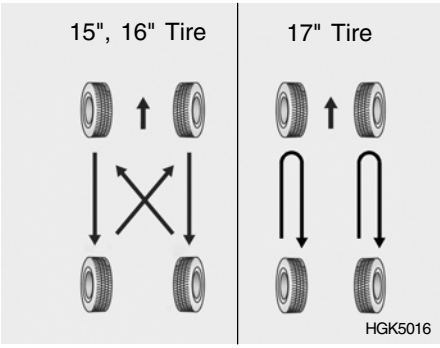

Tires should be rotated every 10,000 km (6,000 miles). If you notice that tires are wearing unevenly between rotations, have the car checked by a Hyundai dealer so the cause may be corrected.
After rotating, adjust the tire pressures and be sure to check wheel nut torque.

WARNING:
Do not mix bias-ply and radial-ply tires under any circumstances. This may cause dangerous handling characteristics.

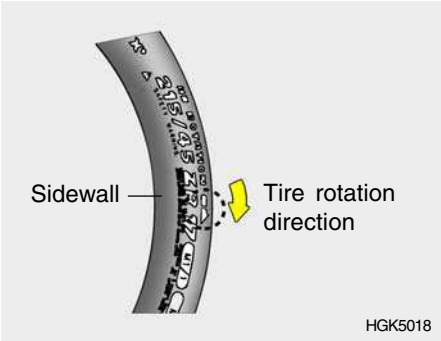

WARNING:
When rotating the 215/45 R17 tires, the tires must be mounted following the "ROTATION" direction marked on the sidewall of the tires. If rotating the tires from the left side to the right side and from the right side to the left side, separate the wheel from the tire and then remount them.

I070A01A-AAT

Tire Balancing

A tire that is out of balance may affect handling and tire wear. The tires on your Hyundai were balanced before the car was delivered but may need balancing again during the years you own the car.
Whenever a tire is dismounted for repair, it should be rebalanced before being reinstalled on the car.

I080A01A-AAT

Tire Traction

Tire traction can be reduced if you drive on worn tires, tires that are improperly inflated or on slippery road surfaces. Tires should be replaced when tread wear indicators appear. To reduce the possibility of losing control, slow down whenever there is rain, snow or ice on the road.

I090A02S-GAT

When to Replace Tires

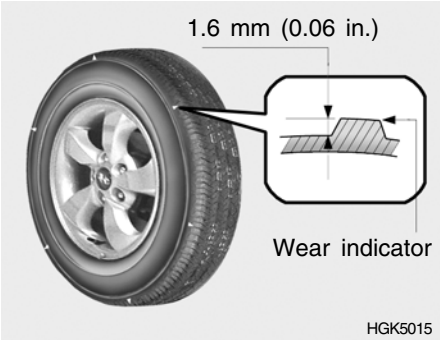

The original tires on your car have tread wear indicators. The tread wear indicators appear when the tread depth is 1.6 mm (0.06 in.). The tire should be replaced when these appear as a solid bar across two or more grooves of the tread. Always replace your tires with those of the recommended size. If you change wheels, the new wheel's rim width and offset must meet Hyundai specifications.

WARNING:

- **Driving on worn-out tires is dangerous! Worn-out tires can cause loss of braking effectiveness, steering control and traction. When replacing tires, never mix radial and bias-ply tires on the same car. If you replace radial tires with bias-ply tires, they must be installed in sets of four.**
- **Using tires and wheels of other than the recommended sizes may cause unusual handling characteristics that may cause death, serious injury or property damage.**
- **Tires degrade over time, even when they are not being used. Regardless of the remaining tread, it is recommended that tires generally be replaced after six (6) years of normal service. Heat caused by hot climates or frequent high loading conditions can accelerate the aging process. Failure to follow this warning can result in sudden tire failure, which could lead to a loss of control and an accident involving serious injury or death.**

I100A01FC-GAT

Your Hyundai is delivered with the following:

Spare tire and wheel
Wheel nut wrench, Wrench bar, Spanner, Screwdriver
Jack

VEHICLE SPECIFICATIONS

Measurement 9-2
Engine 9-3
Lubrication Chart 9-4

9

J010A02GK-GAT

MEASUREMENT

mm (in.)

Overall length			4395(173)
Overall width			1760(69.3)
Overall height (unladen)			1330(52.4)
Wheel base			2530(99.6)
Wheel tread	195/65 R15	Front	1490(58.7)
		Rear	
	205/55 R16	Front	1510(59.5)
		Rear	
	215/45 R17	Front	1500(59.1)
		Rear	

J020A01GK-GAT

POWER STEERING

Type	Rack and pinion
Wheel free play	0 ~ 30 mm (0 ~ 1.18 in.)
Rack stroke	132 mm (5.20 in.)
Oil pump type	Vane type

J060A01F-AAT

FUEL SYSTEM

Fuel tank	Liter	US.gal	Imp.gal
capacity	55	14.5	12

J030A02GK-GAT

TIRE

Option	195/65 R15, 205/55 R16, 215/45 R17

J035A02GK-GAT

SPARE TIRE

Standard	T125/70 R16 (Temporary)
Option	Full size

J040A03GK-GAT

ELECTRICAL

Item	1.6L	2.0L	2.7L
Battery	MF 60AH	MF 68AH	MF 68AH
Alternator	90A	90A	120A

J050A01GK-GAT

BRAKE

Type	Dual hydraulic with brake booster
Front brake type	Ventilated disc
Rear brake type	Solid disc
Parking brake	Cable

ENGINE

J070A05GK-GAT

ITEMS			SPECIFICATION		
			1.6 L	2.0 L	2.7 L
Engine Type			4-Cyl., In-line DOHC		6-Cyl., V-type DOHC
Bore x Stroke (mm)			76.5 x 87	82 x 93.5	86.7 x 75
Displacement (cc)			1,599	1,975	2,656
Firing order			1 - 3 - 4 - 2	1 - 3 - 4 - 2	1 - 2 - 3 - 4 - 5 - 6
Valve clearance (Cold Engine 20 ± 5°C)	For adjusting	Intake	AUTO LASH	0.17 ~ 0.23 mm (0.0067 ~ 0.0091 in.)	AUTO LASH
		Exhaust		0.25 ~ 0.31 mm (0.0098 ~ 0.0122 in.)	
	For checking	Intake		0.12 ~ 0.28 mm (0.0047 ~ 0.011 in.)	
		Exhaust		0.2 ~ 0.38 mm (0.0079 ~ 0.015 in.)	
Idle speed (rpm)			700 ± 100	700 ± 100	750 ± 100
Ignition timing (Base)			BTDC 5° ± 5°	BTDC 8° ± 5°	BTDC 12° ± 10°

4 LUBRICATION CHART

J080A04GK-GAT

Item		Oil & Grease Standard		Q'ty (liter) (us.qts., Imp.qts.)
Engine Oil Recommends Shell HELIX Motor oils		API SJ, SL or ABOVE, ILSAC GF-3 or ABOVE	SAE 5W-20, 5W-30 SAE 10W-30 (ABOVE -18°C) SAE 15W-40 (ABOVE -13°C) SAE 20W-50 (ABOVE -7°C)	(Drain and Refill) Engine Oil: (With oil filter) 1.6 L : 3.3 (3.5, 2.9) 2.0 L : 4.0 (4.2, 3.5) 2.7 L : 4.5 (4.76, 4.0)
Engine Oil Consumption		Normal driving condition		MAX. 1L / 1500 Km
		Severe driving condition		MAX. 1L / 1000 Km
Transaxle	Manual	HYUNDAI GENUINE PARTS MTF 75W/85 (API GL-4)		5 speed:2.15(2.27, 1.86) 6 speed:2.2(2.32, 1.94)
	Auto	HYUNDAI GENUINE ATF SP-III, DIAMOND ATF SP-III, SK ATF SP-III or other brands approved by Hyundai Motor Co.,		7.8 (8.2, 6.9)
Power Steering		PSF-3		As required
Brake Fluid		DOT 3 or DOT 4 equivalent		As required
Coolant		Ethylene glycol base for aluminium radiator		1.6L/2.0L : 7.0 (7.4, 6.2) 2.7L : 8.0 (8.5, 7.0)

INDEX

10

A
Air bag 1-34
Air cleaner filter 6-11
Air Conditioning
  Care 6-18
  Operation 6-19
  Switch 1-84
Air Conditioner filter 1-93
Antenna 1-102
Ashtray 1-63
Audio Remote Control 1-82
Automatic Transaxle 2-8

B
Battery 2-18, 6-23
Brake
  Anti-lock system 2-12
  Checking the brakes 6-17
  Fluid 6-17
  Practices 2-15
Breaking-In your new Hyundai 1-3

C
Care of Cassette tapes 1-128
Care of Discs 1-127
Cassette Tape Player Operation
  (H280, H265, H465) 1-105, 1-114, 1-120
Catalytic Converter 7-3
Child Restraint system 1-25
Child Seat Restraint Suitability For Seat Position
  Using the Seat Belt 1-27
Cigarette Lighter 1-62
Clock 1-62
Clutch
  Checking fluid 6-18
Combination Light
  Daytime running lights 1-57
  Headlight flasher 1-58
  Headlight switch 1-56
  High-beam switch 1-57
  Lane change signal 1-56
  Turn signal operation 1-56
Compact Disc Player Operation
  (H280, H265, H465) 1-111, 1-117, 1-123
Cooling Fans 6-24
Corrosion Protection
  Cleaning the interior 4-6
  Protecting your Hyundai from corrosion 4-2
  Washing and waxing 4-4
Cruise Control 1-79

D
Defrosting/Defogging 1-89
Door
  Central door lock 1-8
  Door locks 1-7
  Locking and unlocking front door with a key 1-7
Drink Holder 1-63

Driving
Economical driving 2-16
Smooth cornering 2-17
Winter driving 2-17

E
Electronic Stability Program (ESP) 2-13
Emissions Control Systems 7-2
Engine
Before starting the engine 2-3
Changing the oil and filter 6-6
Compartment (1.6L, 2.0L, 2.7L) 6-2
Coolant 6-9
Coolant temperature gauge 1-50
If the engine overheats 3-4
Number 8-2
Oil 6-6
Oil consumption 6-8
Starting 2-5
Engine Exhaust Can Be Dangerous 2-2

F
Fog Light 1-60
Front Seats
Adjustable front seats 1-13
Adjustable headrests 1-14
Adjusting seat forward and rearward 1-13
Adjusting seatback angle 1-14
Lumbar support control 1-16
Seat cushion height adjustment 1-16
Seat warmer 1-16
Fuel
Capacity 9-2
Gauge 1-50
Recommendations 1-2
Fuel Filler Lid
Remote release 1-74
Fuse Panel Description 6-37
Fuses 6-21

G
General Everyday Checks 6-5
Glove box 1-69

H
Hazard Warning System 1-61
Headlight Leveling Device System 1-64
Heating and Air Conditioning Control
Rotary type 1-84
Automatic type 1-93
High-mounted rear stoplight 1-72
Hood Release 1-73
Horn 1-78

I
Ignition Switch 2-4
Immobilizer System 1-4
Instrument Cluster and Indicator Lights 1-42
Instrument Panel Light Control (Rheostat) 1-62
Intermittent Wiper 1-59

J
Jump Starting 3-3

K
Keys 1-4
If you lose your keys 3-15
Positions 2-3

L
Light Bulb Replacement 6-27
Lubrication Chart 9-4
Luggage Net 1-78

M
Maintenance Intervals
Explanation of scheduled maintenance items 5-8
Maintenance under severe usage conditions 5-7
Scheduled maintenance 5-4
Service requirements 5-2
Map Light 1-68
Mirros
Day-night inside rearview 1-71
Outside rearview folding 1-70
Outsde rearview heating 1-70
Multi gauge 1-55

O
Odometer 1-52

P
Parking Brake 1-71
Power Steering Fluid Level 6-25

R
Rear Seats
Before Folding the Rear Seats 1-18
Fold down 1-19
Rear seat entry 1-17
Rear Seat Positions 1-18
Rear Window Defroster Switch 1-61
Rear Window Wiper and Washer Switch 1-59

S
Seat Belts
3-Point type 1-23
Adjustable height 1-23
Adjusting your seat belt 1-24
Care of seat belts 1-22
Precautions 1-20
Pre-tentioner Seat Belt 1-31
Spectacle Case 1-68
Speedometer 1-51
Starting Procedures 2-5
Steering Wheel Tilt lever 1-78
Stereo Radio Operation (H280, H265, H465) 1-105, 1-114, 1-120
Stereo Sound System 1-103
Sun Visor 1-77
Sunroof 1-65

T
Tachometer 1-51
Tail Gate 1-75
Theft Alarm System 1-9
Tires
  Balancing 8-5
  Chains 8-4
  Changing a flat tire 3-6
  If you have a flat tire 3-6
  Information 8-3
  Pressure 8-3
  Replacement 8-6
  Rotation 8-5
  Snow tires 8-4
  Spare tire 3-5
  Traction 8-5
Towing
  Emergency 3-14
  If your car must be towed 3-12
  Trailer or vehicle towing 2-21
Transaxle
  Automatic 2-8
  Automatic transaxle fluid checking 6-15
  Manual 2-5
Trip Computer 1-53
Trip Odometer 1-52

V
Vehicle Identification Number (VIN) 8-2
Vehicle Specification 9-2
Ventilation
  Center ventilator 1-83
  Side ventilator 1-83

W
Washer reservoir 6-14
Warning Lights 1-44
Windows Glass 1-12
Windshield Wiper and Washer 1-58
Windshield Wiper Blades 6-12

HYUNDAI

Coupe

SA010A1-E

OWNER'S MANUAL

Operation
Maintenance
Specifications

The information in this Owner's Manual is current at the time of publication. However, the right to amend specifications without notice or obligation to incorporate such amendments into vehicles already produced is reserved.

This manual applies to all markets and includes descriptions and explanations of optional as well as standard equipment. As a result, some of the equipment operating descriptions referred to may not apply to the particular vehicle with which this manual is supplied.

Please refer to the nearest Hyundai authorised repairer for information regarding current standard and optional equipment levels.

SA020A1-E

Responsibilty For Maintenance

It is the responsibility of the vehicle owner/driver to ensure that all routine maintenance services are undertaken in line with the recommendations specified in Section 5 of this manual. In addition, in order to ensure continued validity of the new vehicle warranty and safe operation of the vehicle, non scheduled maintenance/running repairs should be undertaken at the earliest available opportunity.
Under severe operating conditions, more frequent maintenance is required. Details of the maintenance schedule for such conditions are also given in section 5.
It is recommended that all maintenance operations and repairs are entrusted to a Hyundai authorised repairer to ensure that the latest repair methods, specialised tooling and genuine Hyundai parts are used to ensure the continued reliability and safety of the vehicle.

FOREWORD

Hyundai Motor Company wish to take this opportunity to thank you for purchasing a Hyundai product and to welcome you to the ever increasing number of discriminating motorists who drive Hyundai vehicles. The advanced engineering and construction methods employed during both design and production of the Hyundai marque are something of which we are proud, and this commitment to providing a high quality product is supported by a comprehensive after sales and warranty service of which we are equally proud.

This owner's manual will introduce the operating and maintenance requirements for the vehicle and it is recommended that it is carefully read to ensure that the maximum performance and durability along with safe and satisfactory operation are obtained. The recommended routine maintenance servicing along with any running repairs that may be required should be entrusted to a Hyundai authorised repairer to ensure that only the latest methods and genuine Hyundai replacement parts are used for the continued reliability, safety and performance of the vehicle.

Should any question or query exist regarding any aspect of your Hyundai please contact the nearest Hyundai authorised repairer who will be only too pleased to assist wherever possible.

Note: This owners manual should be considered as part of the vehicle and should be kept in the vehicle at all times for ease of reference.

In the event of the vehicle being sold please ensure that this manual is left in the vehicle for the reference of the new owner.

CAUTION:
Severe engine and transaxle damage may result from the use of poor quality fuels and lubricants that do not meet Hyundai specifications. You must always use high quality fuels and lubricants that meet the specifications listed on Page 9-4 in the Vehicle Specifications section of the Owner's Manual.

Copyright 2006 Hyundai Motor Company. All rights reserved. No part of this publication may be reproduced, stored in any retrieval system or transmitted in any form or by any means without the prior written permission of Hyundai Motor Company.

SA040A1-E

CAUTION: MODIFICATIONS TO ORIGINAL VEHICLE SPECIFICATION

Modification to the original vehicle specification may invalidate the manufacturers warranty and may adversely affect the safety and durability of the vehicle.
Components which are subject to modification or are added to the original vehicle specification without the express approval of the manufacturer and result in consequential loss or damage are not covered by the vehicle manufacturers warranty.

SA050A1-E

TWO WAY RADIO INSTALLATION

This vehicle is fitted with electronically controlled fuel injection or other micro processor controlled equipment.
It is possible for incorrectly installed two way radio equipment including mobile telephones to adversely affect these systems.
Before radio equipment of this kind is installed, please contact your Hyundai authorised repairer for recommendation regarding the suitability of the particular radio equipment concerned and the recommended method of installation and equipment location.
Incorrectly installed or unsuitable equipment which gives rise to incorrect functioning of or damage to electronic vehicle components will not fall within the scope of the vehicle manufacturers warranty.

A090A01A-AAT

SAFETY AND VEHICLE DAMAGE WARNING

This manual includes information titled as WARNING, CAUTION and NOTE. These titles indicate the following:

WARNING:
This indicates that a condition may result in harm, serious injury or death to you or other persons if the warning is not heeded. Follow the advice provided with the warning.

CAUTION:
This indicates that a condition may result in damage to your vehicle or its equipment if the caution is not heeded. Follow the advice provided with the caution.

NOTE:
This indicates that interesting or helpful information is being provided.

A100A01L-EAT

GUIDE TO HYUNDAI GENUINE PARTS

1. What are Hyundai Genuine Parts?

Hyundai Genuine Parts are the same parts used by Hyundai Motor Company to manufacture vehicles. They are designed and tested for the optimum safety, performance, and reliability to our customers.

2. Why should you use genuine parts?

Hyundai Genuine Parts are engineered and built to meet rigid manufacturing requirements. Using imitation, counterfeit or used salvage parts is not covered under the Hyundai New Vehicle Limited Warranty or any other Hyundai warranty. In addition, any damage to or failure of Genuine Hyundai Parts caused by the installation or failure of an imitation, counterfeit or used salvage part is not covered by Hyundai Motor Company.

3. How can you tell if you are purchasing Hyundai Genuine Parts?

Look for the Hyundai Genuine Parts Logo on the package (see below).

The export specifications are written in English only.
Hyundai Genuine Parts are only sold through Hyundai authorised repairers.

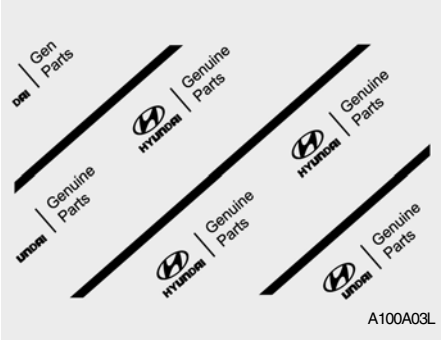

A100A03L

A100A01L

A100A02L

A100A04L

TABLE OF CONTENTS

SECTION

CONTROLS AND EQUIPMENT	1
DRIVING YOUR HYUNDAI	2
IN CASE OF EMERGENCY	3
APPEARANCE CARE	4
VEHICLE MAINTENANCE REQUIREMENTS	5
OWNER MAINTENANCE	6
EMISSION CONTROL SYSTEMS	7
CONSUMER INFORMATION	8
VEHICLE SPECIFICATIONS	9
INDEX	10

INSTRUMENTS AND CONTROLS

B250A02GK-EAT

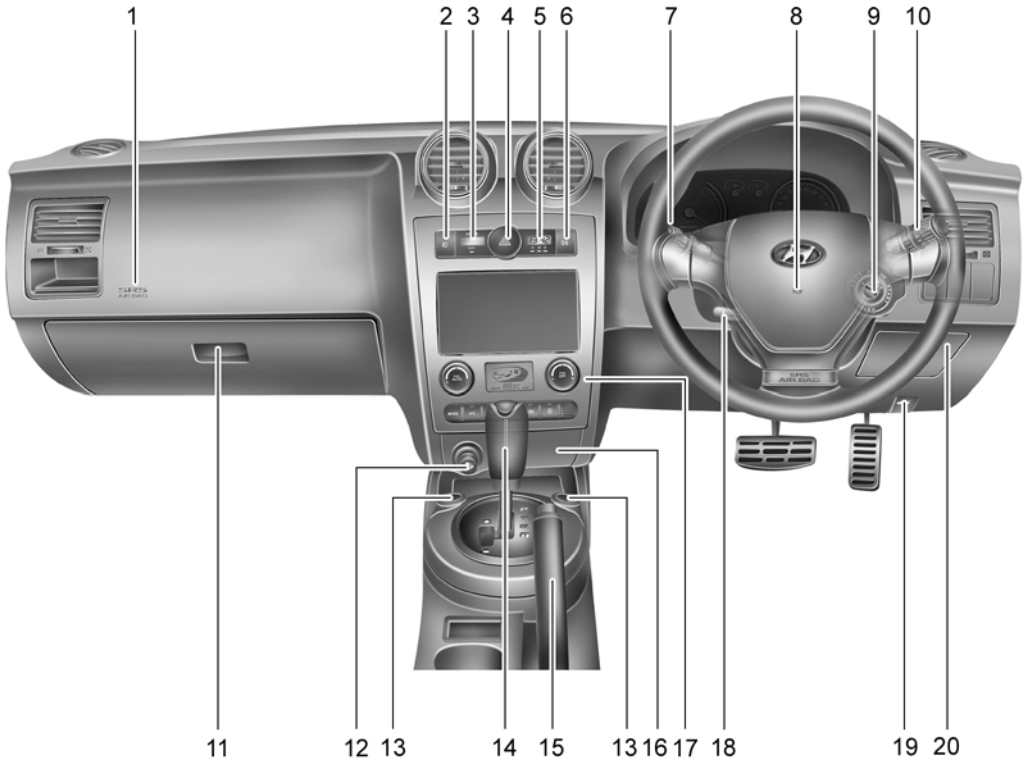

OGK026002UK-1

1. Passenger's Air Bag (Not all models)
2. Rear Fog Light Switch
3. Outside Temperature Switch
4. Hazard Warning Switch
5. Digital Clock
6. Front Fog Light Switch
7. Windscreen Wiper/Washer Switch
8. Horn and Driver's Airbag
9. Ignition Switch
10. Multi-Function Light Switch
11. Glove Box
12. Cigar Lighter
13. Front Seat Warmer (Not all models)
14. Shift Lever
15. Parking Brake Lever
16. Ashtray
17. Heating/Air Conditioning Control Panel
18. Steering Wheel Tilt Lever
19. Bonnet Release Lever
20. Fuse and Relay Box

CAUTION:

When installing a container of liquid air freshener inside the vehicle, do not place it near the instrument cluster nor on the instrument panel surface. If there is any leakage from the air freshener onto these areas (Instrument cluster, instrument panel or air ventilator), it may damage these parts. If the liquid from the air freshener does leak onto these areas, wash them with water immediately.

B255A02GK-EAT

INDICATOR SYMBOLS ON THE INSTRUMENT PANEL

- Turn Signal Indicator Lights
- ESP / ESP OFF — Electronic Stability Program (ESP) Indicator Lights (Not all models)
- Immobiliser Warning Light
- Charging System Warning Light
- AIR BAG — SRS (Airbag) Service Reminder Indicator (SRI)
- Seat Belt Warning Light
- High Beam Indicator Light
- Low Oil Pressure Warning Light
- CHECK — Malfunction Indicator Light (Not all models)
- Low Fuel Level Warning Light
- BRAKE — Parking Brake/Low Brake Fluid Level Warning Light
- CRUISE — CRUISE Indicator Light (Not all models)
- SET — CRUISE SET Indicator Light (Not all models)
- Hatchback Door Open Warning Light
- Door Open (Ajar) Warning Light
- ABS — ABS Service Reminder Indicator (Not all models)

* More detailed explanations of these items will be found beginning on page 1-42.

CONTROLS AND EQUIPMENT

Fuel Recommendations 1-2
Running In Your New Hyundai 1-3
Immobiliser System 1-4
Door Locks 1-6
Anti-theft Alarm System 1-8
Power Windows 1-11
Seats 1-12
Seat Belts 1-19
Child Restraint System 1-23
Supplemental Restraint (AIRBAG) System 1-32
Instrument Cluster and Indicator Lights 1-40
Warning and Indicator Lights 1-42
Trip Computer 1-50
Multi Gauge 1-52
Multi-function Switch 1-53
Windscreen Wiper/Washer Switch 1-55
Sunroof 1-62
Mirror 1-67
Bonnet Release 1-70
Cruise Control 1-76
Audio Remote Control Switch 1-79
Heating and Cooling Control 1-81
Antenna 1-99
Stereo Sound System 1-101

1

FUEL RECOMMENDATIONS

B010A02A-EAT

THIS VEHICLE MUST ONLY BE OPERATED WITH UNLEADED FUEL. SERIOUS DAMAGE WILL RESULT FROM THE USE OF LEADED FUEL.

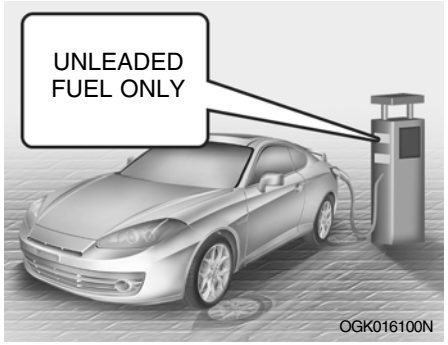

For the optimal vehicle performance, we recommend you to use unleaded petrol with an octane rating of RON (Research Octane Number) 95 /AKI (Anti Knock Index) 91 or higher.
You may use unleaded petrol with an octane rating of RON 91~94/AKI 87~90 but it may result in slight performance reduction of the vehicle.

To prevent accidental charging of the fuel tank with leaded fuel, a small diameter filler neck along with a restrictor flap are fitted to ensure that only unleaded fuel pump nozzles may enter the filler neck. However, care must be exercised when refuelling the vehicle tank from fuel cans or by means of a funnel that the fuel being used is unleaded.
The use of leaded fuel in this vehicle will result in irreversible pollution of the catalyst element. Such pollution will prevent correct operation of the catalyst and give rise to increased operating temperatures leading to the catalyst element melting and restricting the exhaust flow along with an increase in exhaust emission levels.

CAUTION:
The vehicle warranty will not extend to damage arising from the use of incorrect fuels.

ZB010C1-E

"Alternative fuels"

Fuels which contain methanol or ethanol must not be used.

ZB010D1-E

Operation in Foreign Countries

Drivers of vehicles which are to be operated in foreign countries must satisfy themselves that:

- o The vehicle meets all local regulations with respect to insurance, specifications etc..
- o The correct types and grades of fuel are available for satisfactory operation of the vehicle.

ZB010F2-A

Fuels for Cleaner Air

To help contribute to cleaner air, Hyundai recommends that you use fuels treated with detergent additives, which help to prevent deposit formation in the engine. These fuels will help the engines run cleaner and increase the Emission Control System performance.

BEFORE ENTERING THE VEHICLE

YB020A1-E

- o Ensure that all windows, mirrors and lamps are clean.
- o Check condition of all tyres.
- o Ensure that no fluid leaks are evident.
- o Ensure that the area around the vehicle is clear before driving off.

AFTER ENTERING THE VEHICLE

YB020B1-E

- o Ensure that all occupants fasten and correctly adjust seat belts.
- o Ensure that seat and head restraint positions are adjusted for optimum safety, control and comfort.
- o Adjust interior and exterior rear view mirrors.
- o Verify correct operation of lamps, horn and other electrical equipment.
- o Ensure that warning lamps illuminate when ignition is turned on.

NOTE:
Fluid levels such as engine oil, engine coolant, brake and windscreen washer fluid should be checked daily or at each refuelling, whichever occurs sooner.

RUNNING IN YOUR NEW HYUNDAI

B020A01S-EAT

The longevity and performance of the vehicle are greatly affected by the care exercised during the first 1,000 miles of motoring. Because of modern manufacturing techniques, rigid guidelines regarding maximum road speeds have become unnecessary. However, certain precautions should be observed in order to obtain the best possible performance and useful life from the vehicle.

1) Do not race the engine without a load (i.e revving the engine in neutral).
2) During the first 500 miles the maximum engine speed should be restricted to 3,000 rpm and gradually increased thereafter.
3) Avoid prolonged constant speed operation. The internal components of the engine will become more quickly run in if the operation speed is varied during the running in period.
4) Never allow the engine to labour. Use the gearbox freely and avoid large throttle openings when the engine speed is below 1,500 rpm.

5) Avoid rapid acceleration and maximum throttle openings.
6) Avoid harsh braking during the first 100 miles of urban motoring or 1,000 miles of motorway driving to allow the friction facings of the brake pads and shoes to bed against the discs and drums properly.
7) No trailer towing should be undertaken during the running in period.

IMMOBILISER SYSTEM

B880A01A-EAT

The immobiliser system is an anti-theft device, designed to deter automobile theft.

B880B04A-EAT

Keys

All of the locks fitted to the vehicle are operated by the same key. However, since it is possible to lock the doors without the use of the key, care should be exercised to ensure that the key does not become locked inside the vehicle by mistake.

NOTE:
A non-genuine duplicate key will not start the engine.

CAUTION:
When starting the engine, do not use the key with other immobiliser keys around. Otherwise the engine may not start or may stop soon after it starts.
Keep each key separate to prevent immobiliser malfunction, once you have received your new vehicle.

B880C02A-EAT

Key Numbers

The vehicle key number is recorded on a metal tag attached to the keys when the vehicle is first delivered to you.
The key number should be recorded and kept in a safe place in case the need to order further keys arises. New keys are available from any Hyundai authorised repairer by quoting the relevant key number.

In the interest of security, the metal tag attached to the keys which bears the key number should be removed from the key ring after you receive your new vehicle. In addition, key numbers cannot be provided by Hyundai for security reasons.
If you need additional keys or if you should lose your keys, your Hyundai authorised repairer can make new keys.

YB030C2-E

Illuminated Ignition Switch

Whenever a door is opened, the ignition switch will be illuminated for your convenience provided the ignition switch is not in the "ON" position. The light will go off approximately 10 seconds after closing the door or when the ignition switch is turned on.

DOOR LOCKS

B040A01GK-EAT

WARNING:

- **Unlocked doors can be dangerous. Before you drive away (especially if there are children in the car), be sure that all the doors are securely closed and locked so that the doors cannot be inadvertently opened from the inside. This helps ensure that doors will not be opened accidentally. Also, when combined with the proper use of seat belts, locking the doors helps keep occupants from being ejected from the car in case of an accident.**
- **Before opening the door, always look for and avoid oncoming traffic.**
- **A locked-up vehicle can become extremely hot, causing death or severe injury to unattended children, handicapped persons or animals who cannot escape the vehicle. Never leave children, handicapped persons or animals unattended in your vehicle.**
- **In case of accident the door is unlocked automatically (Not all models).**

B040B01A-AAT

Locking and unlocking front doors with a key

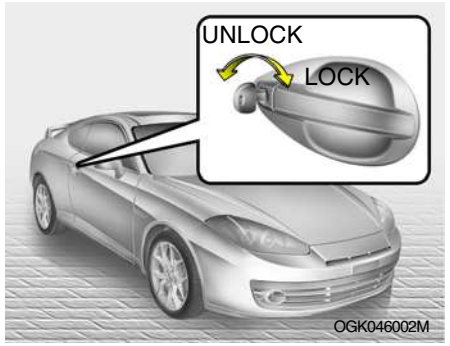

- The door can be locked or unlocked with a key.
- Lock the door by turning the key toward the front of the vehicle and unlock it by turning the key toward the rear.

B040C01O-AAT

Locking From the Outside

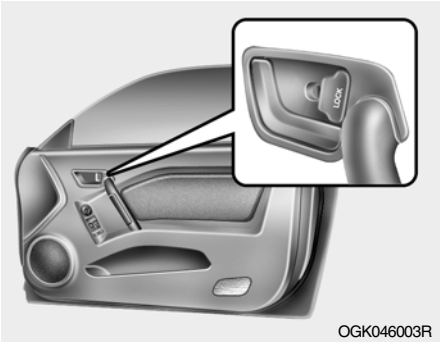

The doors can be locked without a key. To lock the doors, first push the inside lock switch to the "LOCK" position so that the red mark on the switch is not visible, then close the door.

NOTE:

- **If your vehicle is equipped with central door locking system, the door will not lock if the key is left in the ignition switch when the front doors are closed.**
- **When locking the door this way, be careful not to lock the door with the ignition key left in the vehicle.**
- **To protect against theft, always remove the ignition key, close all windows, and lock all doors when leaving your vehicle unattended.**

B040D01S-AAT

Locking From the Inside

To lock the doors from the inside, simply close the door and push the lock switch to the "LOCK" position. When this is done, neither the outside nor the inside door handle can be used.

NOTE:
When the door is locked, the red mark on the switch is not visible.

B040G02GK-GAT

Central Door Lock

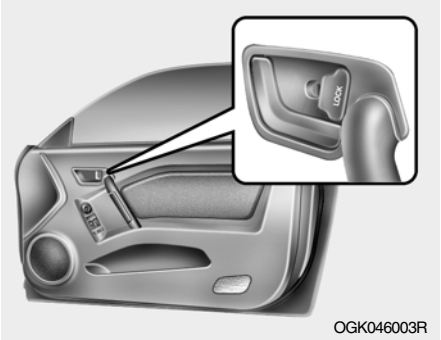

The central door locking is operated by pushing the driver's door lock switch toward the front or rear of the vehicle. If the passenger door is open when the switch is pushed, the door will remain locked when closed.

NOTE:

- **When pushing the switch toward the rear, all doors will unlock. When pushing the switch toward the front, all doors will lock.**
- **When the door is unlocked, the red mark on the switch is visible.**
- **The central door locking is operated by turning the key (driver's door only) toward the front or rear of the vehicle.**
- **If the door is locked/unlocked multiple times in rapid succession with either the vehicle key or door lock switch, the system may stop operating temporarily in order to protect the circuit and prevent damage to system components.**

ANTI-THEFT ALARM SYSTEM

B070A01A-EAT

(Not all models)

This system is designed to provide protection from unauthorised entry into the car. This system is operated in three stages: the first is the "Armed" stage, the second is the "Alarm" stage, and the third is the "Disarmed" stage. If triggered, the system provides an audible alarm with blinking of the turn signal light.

B070B02GK-EAT

Armed Stage

Park the car and stop the engine. Arm the system as described below.

1) Remove the ignition key from the ignition switch.
2) Make sure that the engine bonnet, doors and hatchback door are closed.
3) Lock the doors using the transmitter of the keyless entry system.

After completion of the steps above, the turn signal lamp will blink once to indicate that the system is armed.

NOTE:

1) **If any door, hatchback door or engine bonnet remains open, the system will not be armed.**
2) **If this happens, rearm the system as described above.**
3) **Once the system is armed, only the hatchback door may be unlocked using the key without disarming the system.**

CAUTION:

Do not arm the system until all passengers have left the car. If the system is armed while a passenger(s) remains in the car, the alarm may be activated when the remaining passenger(s) leaves the car.

B070C02GK-EAT
Alarm Stage

The alarm will be activated if any of the following occur while the car is parked and the system is armed.

1) A front door is unlocked and opened without using the transmitter.
2) The hatchback door is opened without using the key.
3) The engine bonnet is opened.

The alarming horn will sound and the turn signal lights will blink continuously for approximately 27 seconds. To turn off the system, unlock the door with the transmitter.

CAUTION:
Avoid trying to start the engine whilst the system is armed.

B070D04GK-EAT
Disarmed Stage

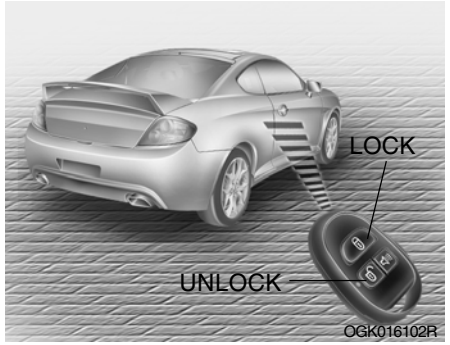

The system will be disarmed when either of the following steps are taken:

1) The driver's or passenger's door is unlocked by depressing the "UNLOCK" button on the transmitter.
2) In the middle of alarming or after alarming, it disarms after 30 seconds if the key is turned to and kept in the "ON" position.

After completing one of steps above, the turn signal lights will blink twice to indicate that the system is disarmed.

NOTE:
If any door, hatchback door or engine bonnet is not opened within 30 seconds, the system will be re-armed.

B075E02O-AAT
Alarm Warning

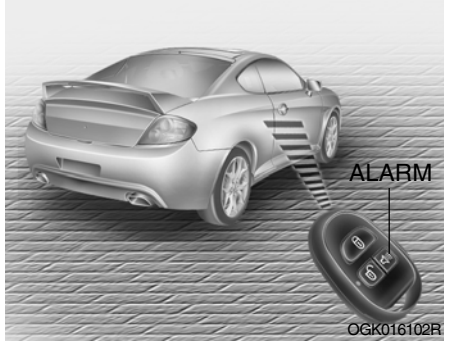

1. Push the "Alarm" button on the transmitter.
2. At the same time, the alarming horn will sound and the turn signal lights will blink for 30 seconds.
3. To turn off the system, push any button on the transmitter.

B070F02A-EAT

KEYLESS ENTRY SYSTEM (Not all models)

Locking doors

1. Close all doors.
2. Push the "LOCK" button on the transmitter.
3. At the same time all doors lock, the turn signal lights will blink once to indicate that the system is armed.

Unlocking doors

1. Push the "UNLOCK" button on the transmitter.
2. At the same time the driver's door unlocks, the turn signal lights will blink twice to indicate that the system is disarmed.

NOTE:

The transmitter will not work if any of following occur:

- **The ignition key is in ignition switch.**
- **You exceed the operating distance limit (10 m).**
- **The battery in the transmitter is weak.**
- **Other vehicles or objects may be blocking the signal.**
- **The weather is extremely cold.**
- **The transmitter is close to a radio transmitter such as a radio station or an airport which can interfere with normal operation of the transmitter.**

When the transmitter does not work correctly, open and close the door with the ignition key. If you have a problem with the transmitter, contact a Hyundai authorised repairer.

NOTE:

Keep the transmitter away from water or any liquid. If the keyless entry system is inoperative due to exposure to water or liquids, it will not be covered by your manufacturer vehicle warranty.

B070E03GK-GAT

Replacing the battery

When the transmitter's battery begins to get weak, it may take several pushes on the button to lock or unlock the doors, and the LED will not light. Replace the battery as soon as possible.

Battery type : CR2016

Replacement instructions:

1. Carefully seperate the case with a blade screwdriver as shown in the illustration.

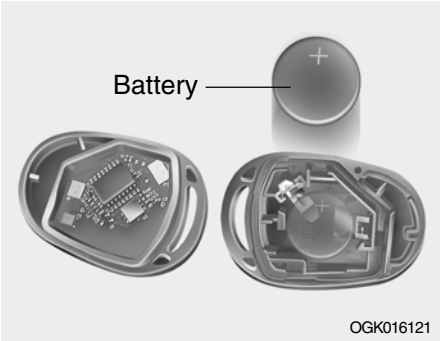

2. Remove the old battery from the case and note the polarity. Make sure the polarity of the new battery is the same(+side facing up), then insert it in the transmitter.
3. Installation is the reverse order of disassembly.

NOTE:

Install a new battery within 30 seconds after remove the old one, if installing a new battery takes more than 30 seconds, take the following steps.

1) Turn the ignition key to the "ACC" position.
2) Make sure that the turn signal lights blink once by pushing the "LOCK" or "UNLOCK" button on the transmitter.

POWER WINDOWS

B050A03GK-EAT

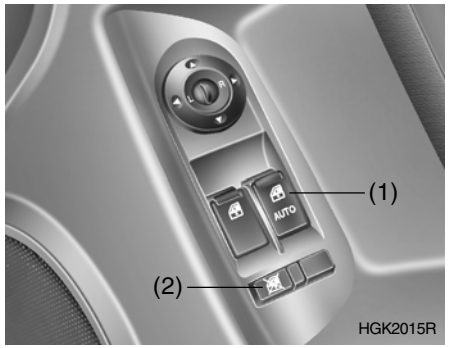

The power windows operate only when the ignition key is in the "ON" position. The main switches are located on the driver's arm rest and control the front windows on the respective sides of the vehicle. The windows may be opened by depressing the front portion of the switch. To stop at the desired opening, release the switch. The window may be closed by pulling the front portion of the switch. To open the window on the driver's side, press the switch(1) halfway down. The window moves as long as the switch is operated.

To fully open the driver's window automatically, press the switch fully down. In automatic operation, the window will fully open even if you let go of the switch. To stop at the desired opening, pull up and release the switch.
In order to prevent operation of the passenger front and rear windows, a window lock switch(2) is provided on the armrest of the driver's door. To disable the power windows, press the window lock switch. To revert to normal operation, press the window lock switch a second time.

NOTE:
The power windows can be operated for 30 seconds after the ignition key is turned to the "ACC" or "LOCK" positions, or removed from the ignition switch.
If the front doors are opened during this 30 second period, the power windows can no longer be operated without the ignition key turned to the "ON" position.

WARNING:
- **Be careful that someone's head, hands and body are not trapped by a closing window.**
- **Never try to operate the main switch on the driver's door and the individual door window switch in opposing directions at the same time. If this is done, the window will stop and cannot be opened or closed.**
- **Always remove the ignition key prior to exiting the car.**
- **Do not leave children alone in the car.**

B080A01FC-EAT

SEAT ADJUSTMENT

WARNING:
Front seat adjustments must not be undertaken whilst the vehicle is in motion. Loss of control of the vehicle may result if seat adjustments are made whilst the vehicle is in motion.

B080B03FC-EAT

FRONT SEATS

Seat Rake Adjustment

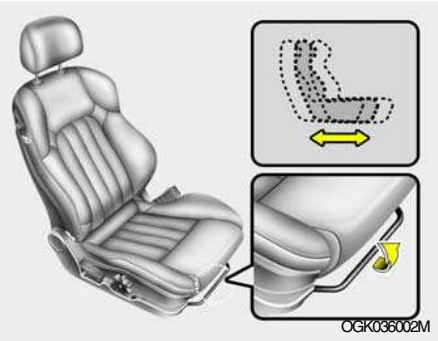

The front seat rake adjustment is performed by raising the lever at the front of the seat base and sliding the seat to the desired position. At this position the lever should be released and the seat rocked to and fro to ensure that the mechanism has locked.

WARNING:

- **Seat adjustment should not be made whilst the vehicle is in motion since loss of control of the vehicle may occur.**
- **To ensure the seat is locked securely, attempt to move the seat forward or rearward without using the lever.**

SB070C1-E

Front Seat Recline Adjustment

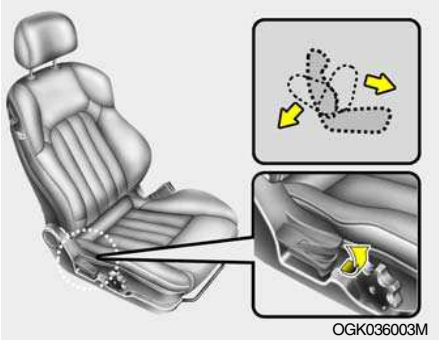

The front seat back recline angle may be adjusted by leaning forward slightly and raising the recline adjustment lever at the side of the seat. When the seatback is at the desired angle, the lever should be released. Ensure that the seatback is locked before driving the vehicle.

WARNING:
To minimise risk of severe injury in the event of a collision or a sudden stop, both the driver's and passenger's seatbacks should always be in an upright position while the vehicle is in motion. The protection provided by the seat belts and airbags in a frontal collision may be reduced significantly when the seat backs are reclined. There is greater risk that the driver and passenger will slide under the seat belt which may result in serious injury if a crash occurs when the seatbacks are reclined. The seat belt cannot provide full protection to an occupant if the seat back is reclined.

B080D02JM-EAT

Adjustable Head Restraints

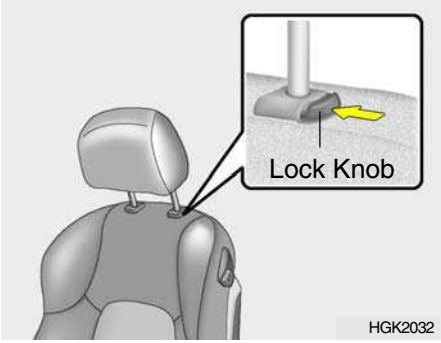

Head restraints are designed to help reduce the risk of neck injuries.
To raise the head restraint, pull it up. To lower it, push it down whilst pressing the lock knob. To remove the head restraint, raise it as far as it can go then press the lock knob whilst pulling upward. This should only be done when the seat is not occupied.

WARNING:

- **For maximum effectiveness in case of an accident the head restraint should be adjusted so the middle of the head restraint is at the same height as the top of the occupant's eyes. For this reason, the use of a cushion that holds the body away from the seatback is not recommended.**

- **Do not operate vehicle with the head restraints removed as injury to the occupants may occur in the event of an accident. Head restraints may provide protection against neck injuries when properly adjusted.**
- **Do not adjust the head restraint height whilst the vehicle is in motion.**

SB070E1-E

Lumbar Support Adjustment (Driver's seat only) (Not all models)

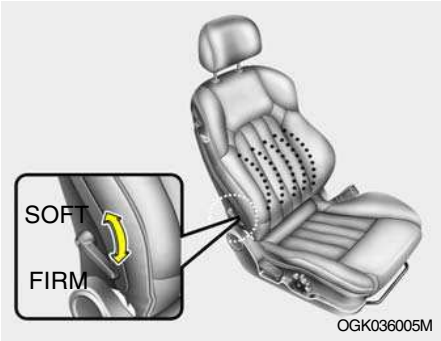

Some models are fitted with adjustable driver seat lumbar support which may be used to increase the amount of lumbar support offered by the seat back. Adjustment is performed by moving the handle at the side of the backrest in a forward direction to increase the support.

FB070F1-E

Seat Cushion Height Adjustment (Driver's seat only) (Not all models)

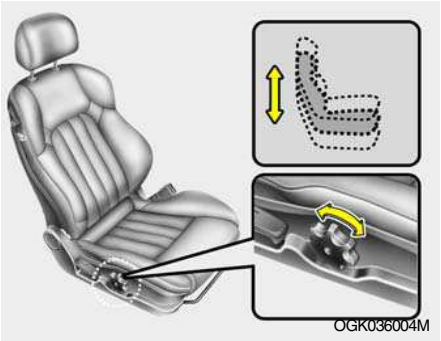

To raise or lower the front part of the seat cushion, turn the knob clockwise or counter-clockwise.

B100A01GK-EAT

Seat Warmer (Not all models)

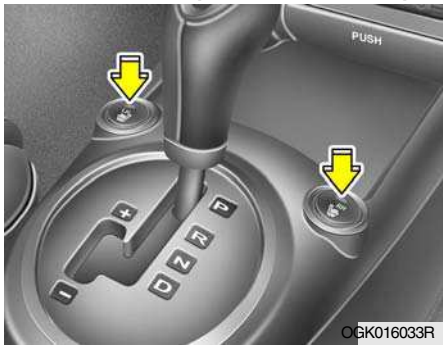

The seat warmer is provided to warm the front seats during cold weather. With the ignition key in the "ON" position, push either of the switches to warm the driver's seat or the passenger's seat.
During mild weather or under conditions where the operation of the seat warmer is not needed, keep the switches in the "OFF" position.

NOTE:

- **The seat warmer will not operate if ambient temperature is warm enough.**
- **If the seat warmer doesn't work when ambient temperature is lower than 24.5°C (76.1°F), it must be checked by a Hyundai authorised repairer.**

WARNING:
The seat heater should not be operated if you have occupants of the front seats who are children, elderly persons, people under medication or under the influence of alcohol.

B130A01GK-DAT

Rear Seat Entry (Walk in device)

The driver and front passenger's seatback should be tilted to enter the rear seat.

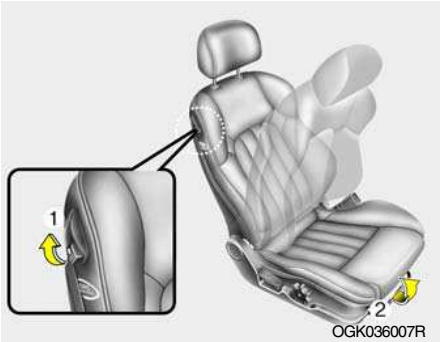

By pulling up the walk in device lever (1) at the right-upper side of the driver side seatback, the seatback will tilt forward. And then pull the lock release lever (2) up with moving the seat forward.

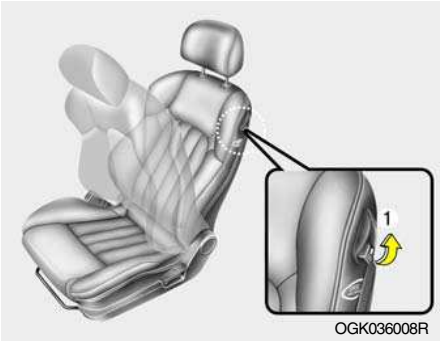

By pulling up the walk in device lever (1) at the left-upper side of the passenger side seatback, the seatback will tilt forward. And then push the seat forward to enter the occupants.

Recliner Memory

By pulling up the walk in device lever (1) seatback is reclined and return to the memorised original position.

WARNING:
Don't drive with reclining of the passenger side seatback. It is dangerous to move it. Be sure the seatback is fix firmly or not before driving.

B129A01F-AAT

Rear Seat Positions

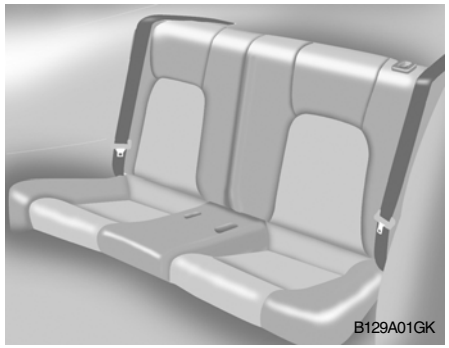

WARNING:
This vehicle contains two rear seating positions only and a seat belt for each seating position. Thus, never permit more than two occupants to ride in the rear seat because an unrestrained occupant could be seriously injured or killed in the event of a vehicle crash.

B099A01GK-AAT

Before Folding the Rear Seats

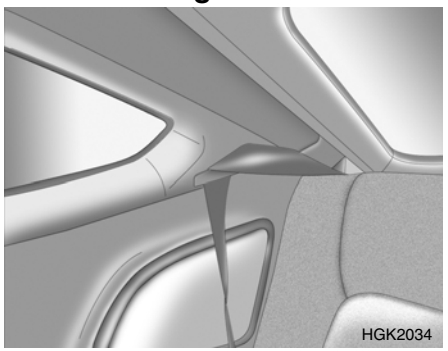

In order to prevent the shoulder belt from being damaged while folding the rear seat, the shoulder belt must be passed through the hanger to keep it out of the way.

CAUTION:

- **Seat belts must be removed from the hanger when in use.**

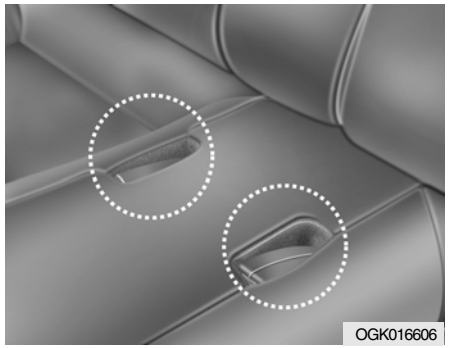

- **Before folding the seatback, insert the buckle in the pocket. This can prevent the buckle from being damaged by seatback.**

SB480A1-E

Folding Rear Seatbacks

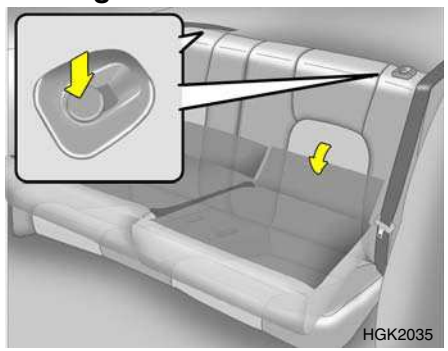

The rear seatbacks may be folded to facilitate the carriage of long items or to increase the luggage capacity of the vehicle.

- To unlock the seatback, release the catch by operating the lock knob, pull the seatback forward and lower to the folded position.
- When the seatback is returned to the upright position, ensure that the latching mechanism has engaged and that the seat may not move unintentionally.

o Luggage which is carried within the passenger compartment must be securely restrained in order to prevent injury in the event of sudden deceleration.

WARNING:
The folding rear seats are intended to allow the carriage of longer objects than could otherwise be accommodated. Do not allow passengers to sit on top of the folded-down seatback whilst the car is in motion since the folded seat does not provide a suitable sitting facility and no seat belts are available for use. Objects carried on the folded seatback should not extend higher than the top of the front seats and must be securely restrained to prevent injury or damage during sudden deceleration.

SB500A1-E
REAR PARCEL SHELF

Large or heavy items must not be placed upon the rear parcel shelf to prevent the possibility of injury arising from such items in the event of impact.

SB090A1-E
SEAT BELT PRECAUTIONS

Seat belts should be worn at all times by all occupants front and rear. The possibility of injury or the severity of injuries suffered in the event of an accident will be greatly reduced by the wearing of seat belts.
In addition the following recommendations should be observed.

SB090B1-E
Babies/Small Children

Babies and small children must be restrained using a restraint system specifically designed for this purpose. Under no circumstances should a child be carried in the vehicle without the use of a suitable restraint which meets the regulations in force in the country where the vehicle is in operation.

SB090C1-E
Larger Children

Larger children should occupy the rear seat and be restrained at all times. The restraint may take the form of a special safety belt or the original factory fitted seat belt used in conjunction with an approved booster cushion depending upon the size and weight of the child. Under no circumstances should children be allowed to travel standing, kneeling or lying on the seat.
Never allow children to ride in the front passenger seat.

SB090O1-E
Pregnant Women

The use of a seat belt is recommended for pregnant women. The seat belt should be worn as low and snugly as possible across the hips, not across the abdomen. A qualified Medical Practitioner should be consulted for further information.

SB090E1-E
Injured Persons

A seat belt should be used when an injured person is being transported. For specific recommendations, the advice of a qualified Medical Practioner should be sought.

SB090F1-E
Seat Belt Occupancy

The seat belts are designed to be used by one seat occupant only. The use of a seat belt by more than one person increases the levels of injury which may be sustained in the event of an accident.

SE090G1-E
Do Not Lie Down

To ensure that the maximum level of protection may be afforded by the seat belt system, all passengers should be sitting in an upright position throughout the journey. The seat belt will be unable to afford maximum protection if the front seats are at or near the fully reclined position.

WARNING:
Sitting in a reclined position or lying down when your vehicle is in motion can be dangerous. Even if you buckle up, your seat belts can't do their job when you're reclined. The shoulder belt can't do its job because it won't be against your body. Instead, it will be in front of you. In a crash you could go into it with great force, receiving serious neck or other injuries.
The lap belt can't do its job either. In a crash the belt could go up over your abdomen. The belt forces would be applied there, not at your strong pelvic bones. This could cause serious internal injuries.
For proper protection when the vehicle is in motion, have the seatback upright. Then sit back in the seat and wear your seat belt properly.

SB090H1-E
CARE OF SEAT BELTS

Seat belt assemblies must never be disassembled or modified in any way. In addition, care should be exercised to ensure that the belt assemblies do not become damaged by being trapped in seat mechanisms, door shuts etc.

WARNING:
When you return the rear seatback to its upright position after the rear seatback was folded down, be careful not to damage the seat belt webbing or buckle. Be sure that the webbing or buckle does not get caught or pinched in the rear seat.

SB090I-E
Periodic Inspection

It is recommended that all seat belts be inspected periodically for wear or damage of any kind. Parts of the system that are damaged should be replaced as soon as possible. Under no circumstances must any part of the seat belt assemblies be dismantled or repaired.

SB090J1-E
Keep Belts Clean and Dry

Seat belts should be kept clean and dry. If belts become dirty, they can be cleaned using a mild soap solution and warm water. Bleach, dye, strong detergents or abrasives should not be used since the fabric may become damaged and weakened.

SB090K1-E
Replacement of Seat Belts

The entire seat belt assembly or assemblies should be replaced if the vehicle has been involved in an accident even if no damage is evident. Additional questions concerning seat belt operation should be directed to a Hyundai authorised repairer.

B170A04A-EAT
Height Adjustable Front Seat Shoulder Belt

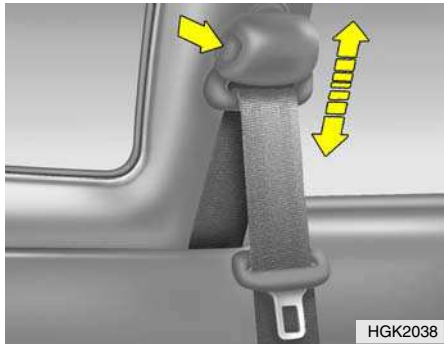

You can adjust the height of the shoulder belt anchor to one of the 4 positions. If the height of the adjusting seat belt is too near your neck, you will not be getting the most effective protection. The shoulder portion should be adjusted so that it lies across your chest and midway over your shoulder nearest the door and not your neck.

To adjust the height of the seat belt anchor, lower or raise the height adjuster into an appropriate position. To raise the height adjuster, pull it up. To lower it, push it down whilst pressing the height adjuster button.
Release the button to lock the anchor into position. Try sliding the height adjuster to make sure that it has locked into the position.

WARNING:
- **The height adjuster must be in the locked position when the vehicle is moving.**
- **The misadjustment of height of the shoulder belt could reduce the effectiveness of the seat belt in a crash.**

B180A01A-EAT

SEAT BELTS (3-Point Type)
To Fasten The Seat Belt

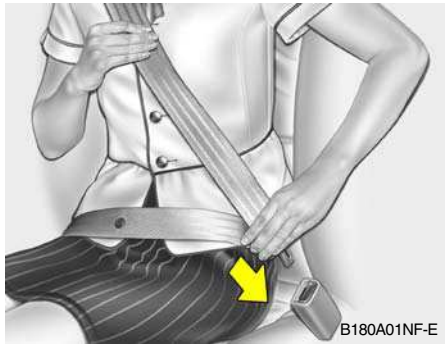

The seat belts are fastened by pulling the belt buckle towards the seat belt stalk and inserting the metal tongue of the buckle into the stalk.

NOTE:
When pulling the seat belt buckle towards the fastening position make sure the webbing is not twisted.

The buckle should be firmly pressed into the stalk until locked which will be indicated by an audible "click".
The length of the seat belt webbing will be automatically adjusted by the seat belt mechanism to allow the wearer maximum freedom of movement whilst the belt is being worn. However, in the event of rapid deceleration or impact, the belt mechanism will automatically lock.
The mechanism will also lock if the seat belt webbing is withdrawn too quickly when the belt is being fastened or if attempts are made to withdraw the webbing whilst the vehicle is not on level ground. Should the seat belt lock under these conditions, it will be possible to release the mechanism by allowing a small amount of webbing to be retracted and the belt withdrawn again.

B200A01S-GAT

Adjusting Your seat Belt

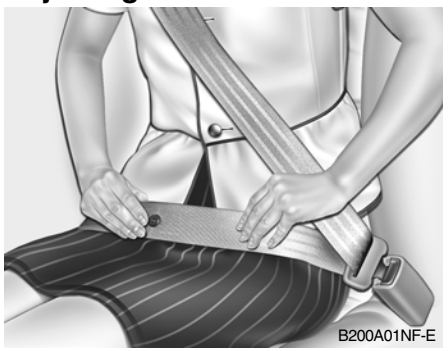

You should place the belt as low as possible on your hips, not on your waist. If the belt is located too high on your body, you could slide under it in case of accident or a sudden stop. This could result of death, serious injury or property damage. Both arms should not be under or over the belt. Rather, one should be over and the other under, as shown in the illustration.
Never wear the seat belt under the arm nearest the door.

B210A01A-AAT

To Release the Seat Belt

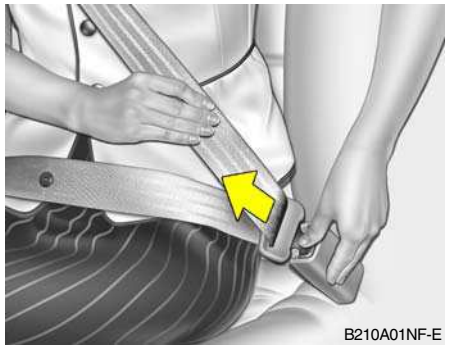

The seat belt is released by pressing the release button in the locking buckle. When it is released, the belt should automatically draw back into the retractor.
If this does not happen, check the belt to be sure it is not twisted, then try again.

B230A03P-EAT

Children riding in the car should sit in the rear seat and must always be restrained to minimise the risk of injury in an accident, sudden stop or sudden manoeuvre. According to accident statistics, children are safer when properly restrained in the rear seats than in the front seat. Larger children should use one of the seat belts provided.
You are required by law to use safety restraints for children. If small children ride in your vehicle you must put them in a child restraint system (safety seat). Children could be injured or killed in a crash if their restraints are not properly secured. For small children and babies, a child seat or infant seat must be used. Before buying a particular child restraint system, make sure it fits your car seat and seat belts, and fits your child. Follow all the instructions provided by the manufacturer when installing the child restraint system.

WARNING:

- A child restraint system must be placed in the rear seat. Never install a child or infant seat on the front passenger's seat. Should an accident occur and cause the passenger side airbag to deploy, it could severely injure or kill an infant or child seated in an infant or child seat. Thus, only use a child restraint in the rear seat of your vehicle.
- Since a safety belt or child restraint system can become very hot if it is left in a closed vehicle, be sure to check the seat cover and buckles before placing a child there.
- When the child restraint system is not in use, fasten it with a safety belt so that it will not be thrown forward in the case of a sudden stop or an accident.
- Children who are too large to be in a child restraint should sit in the rear seat and be restrained with the available lap/shoulder belts. Never allow children to ride in the front passanger seat.
- Always make sure that the shoulder belt portion of the outboard lap/shoulder belt is positioned midway over the shoulder, never across the neck. Moving the child closer to the centre of the vehicle may help provide a good shoulder belt fit. The lap belt portion of the lap/shoulder belt or the centre seat lap belt must always be positioned as low as possible on the child's hips and as snug as possible.
- If the seat belt will not properly fit the child, we recommend the use of an approved booster seat in the rear seat in order to raise the child's seating height so that the seat belt will properly fit the child.
- Never allow a child to stand up or kneel on the seat.
- Never use an infant carrier or child safety seat that "hooks" over a seatback; it may not provide adequate security in an accident.
- Never allow a child to be held in a person's arms whilst they are in a moving vehicle, as this could result in serious injury to the child in the event of an accident or a sudden stop. Holding a child in a moving vehicle does not provide the child with any means of protection during an accident, even if the person holding the child is wearing a seat belt.
- If the child restraint seat is not anchored properly, the risk of a child being seriously injured or killed in a collision greatly increases.

B230G01A-EAT

Installation on the Outboard Rear Seats

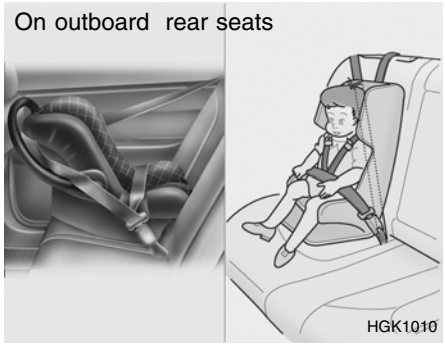

To install a child restraint system in the outboard rear seats, extend the shoulder/lap belt from its retractor. Install the child restraint system, buckle the seat belt and allow the seat belt to take up any slack. Make sure that the lap portion of the belt is tight around the child restraint system and the shoulder portion of the belt is positioned so that it cannot interfere with the child's head or neck. After installation of the child restraint system, try to move it in all directions to be sure the child restraint system is securely installed.

If you need to tighten the belt, pull more webbing toward the retractor. When you unbuckle the seat belt and allow it to retract, the retractor will automatically revert back to its normal seated passenger emergency locking usage condition.

NOTE:

- **Before installing the child restraint system, read the instructions supplied by the child restraint system manufacturer.**
- **If the seat belt does not operate as described, have the system checked immediately by your Hyundai authorised repairer.**

WARNING:

Do not install any child restraint system in the front passenger seat. Should an accident occur and cause the passenger side airbag to deploy, it could severely injure or kill an infant or child seated in an infant or child seat. Therefore, only use a child restraint system in the rear seat of your vehicle.

B230H04GK-EAT

Child Seat Restraint Suitability for Seat Position Using the Seat Belt

Use child safety seats that have been officially approved and are appropriate for your children.

Age Group	Seating Position		
	1st Passenger	Rear Outboard	Rear Centre
0 : Up to 10 kg (0 ~ 9 months)	X	X	N/A
0+ : Up to 13 kg (0 ~ 2 years)	X	X	N/A
I : 9kg to 18kg (9 months ~ 4 years)	X	L1	N/A
II & III : 15kg to 36kg (4 ~ 12 years)	X	X	N/A

U: Suitable for "universal" category restraints approved for use in this group
UF: Suitable for forward-facing "universal" category restraints approved for use in this group
L1: Suitable for "Römer ISOFIX GR1" approved for use in this group (Approval No: E1 R44-03301133)
X: Seat position not suitable for children in this group
N/A: No seating position is provided

B230B02GK-GAT

Using a Child Restraint System with "Tether Anchorage" System

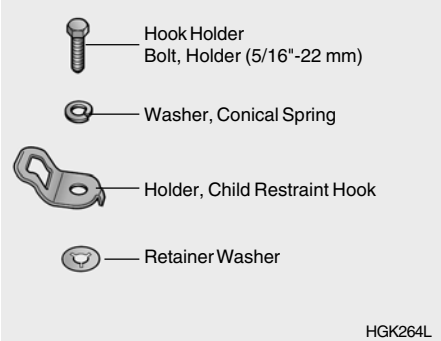

For small children and babies, the use of a child seat or infant seat is required. This child seat or infant seat should be of appropriate size for the child and should be installed in accordance with the manufacturer's instructions. It is further required that the seat be placed in the vehicle's rear seat since this can make an important contribution to safety. Your vehicle is provided with two child restraint hook holders for installing the child seat or infant seat.

B230E03GK-GAT

Securing a Child Restraint System with "Tether Anchorage" System

Two child restraint hook holders are located on the rear luggage compartment floor.

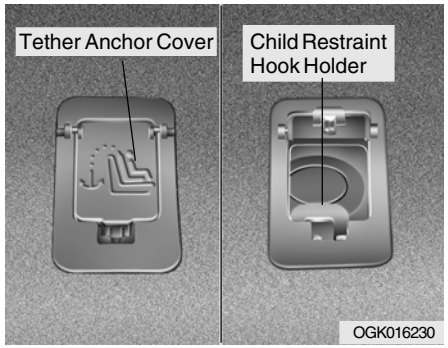

1. Open the tether anchor cover on the rear luggage compartment floor.
2. Route the child restraint seat strap over the seatback.
   For vehicles with adjustable headrests, route the tether strap under the headrest and between the headrest posts, otherwise route the tether strap over the top of the seatback.

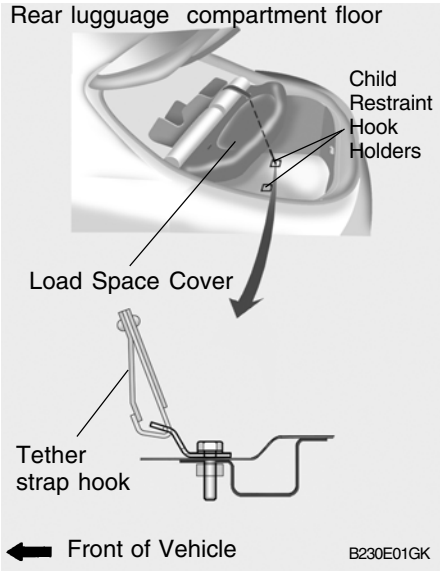

3. Remove the load space cover.
4. Connect the tether strap hook to the child restraint hook holder and tighten to secure the seat.

B230D01GK-EAT

Securing a Child Restraint System with "ISOFIX" System and "Tether Anchorage" System

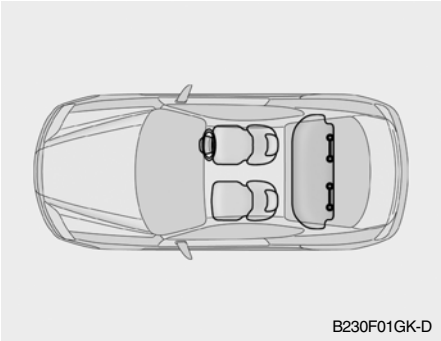

ISOFIX is a standardised method of fitting child seats that eliminates the need to use the standard adult seat belt to secure the seat in the vehicle. This enables a much more secure and positive location with the added benefit of easier and quicker installation.

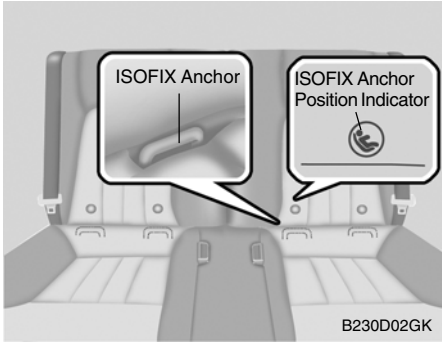

On each side of the rear seat, between the cushion and backrest, are located a pair of ISOFIX anchorage points together with a top tether mounting located in the luggage compartment. During the installation, the seat has to be engaged at the anchorage-points in such a way whereby you can hear it click (check by pulling!) and has to be fixed with the Top Tether-belt to the top tether mounting located in the luggage-compartment. The installing and the use of a child-seat has to be done according to the installation manual for the ISOFIX-seat.

NOTE:
An ISOFIX-child-seat can only be installed if the seat has a vehicle-specific approval according to ECE-R44. Before using the ISOFIX-child-seat, which was bought for another car, ask your Hyundai authorised repairer whether this seat-type is approved and recommended for your Hyundai.

To secure the child restraint seat

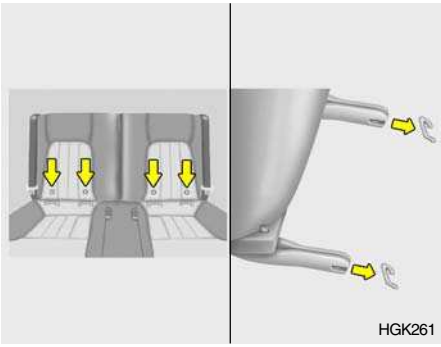

1. To engage the child restraint seat to the ISOFIX anchor, insert the child restraint seat latch into the ISOFIX anchor. Listen for the audible "click" sound.
2. Connect the tether strap hook to the child restraint hook holder and tighten to secure the seat. Refer to "Securing a Child Restraint System with the Tether Anchorage System" on page 1-26.

WARNING:
- **There is no rear centre seating position.**
- **Do not install a child restraint seat at the center of the rear seat using the vehicle's ISOFIX anchors. The ISOFIX anchors are only provided for the left and right outboard rear seating positions. Do not misuse the ISOFIX anchors by attempting to attach a child restraint seat in the middle of the rear seat to the ISOFIX anchors. In a crash, the child restraint seat ISOFIX attachments may not be strong enough to secure the child restraint seat properly in the center of the rear seat and may break, causing serious injury or death.**
- **When using the vehicle's "ISOFIX" system to install a child restraint system in the rear seat, all unused vehicle rear seat belt metal latch plates or tabs must be latched securely in their seat belt buckles and the seat belt webbing must be retracted behind the**

child restraint to prevent the child from reaching and taking hold of unretracted seat belts. Unlatched metal latch plates or tabs may allow the child to reach the unretracted seat belts which may result in strangulation and a serious injury or death to the child in the child restraint.

- **Do not mount more than one child restraint to a child restraint lower anchorage point. Over-loading may cause the anchorage points or tether anchor to break, causing serious injury or death.**
- **Attach the ISOFIX or ISOFIX-compatible child restraint seat only to the appropriate locations shown in the illustration.**
- **Always follow the installation and use instructions provided by the manufacturer of the child restraint.**

B180B02GK-EAT

Pre-tensioner Seat Belt (Not all models)

Your Hyundai vehicle is equipped with driver's and front passenger's pre-tensioner seat belts. The purpose of the pre-tensioner is to make sure that the seat belts fit tightly against the occupant's body in certain frontal collisions.

The pre-tensioner seat belts can be activated alone or, where the frontal collision is severe enough, together with the airbags.

When the vehicle stops suddenly, or if the occupant tries to lean forward too quickly, the seat belt retractor will lock into position. In certain frontal collisions, the pre-tensioner will activate and pull the seat belt into tighter contact against the occupant's body.

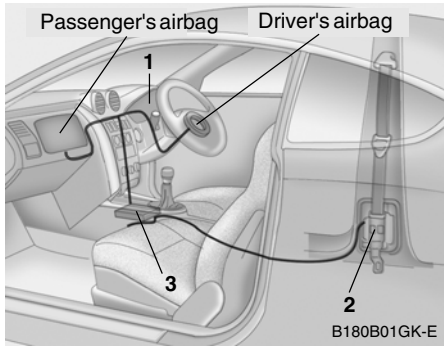

The seat belt pre-tensioner system consists mainly of the following components.

Their locations are shown in the illustration.

1. SRS airbag warning light
2. Seat belt pre-tensioner assembly
3. SRS control module

WARNING:

To obtain maximum benefit from a pre-tensioner seat belt:

1. The seat belt must be worn correctly.
2. The seat belt must be adjusted to the correct position.

NOTE:

- **Both the driver's and front passenger's pre-tensioner seat belts will be activated in certain frontal collisions. The pre-tensioner seat belts can be activated alone or, where the frontal collision is severe enough, together with the airbags.**
- **When the pre-tensioner seat belts are activated, a loud noise may be heard and fine dust, which may appear to be smoke, may be visible in the passenger compartment. These are normal operating conditions and are not hazardous.**
- **Although it is harmless, the fine dust may cause skin irritation and should not be breathed for prolonged periods. Wash your hands and face thoroughly after an accident in which the pre-tensioner seat belts were activated.**

CAUTION:

- **Because the sensor that activates the SRS airbag is connected with pre-tensioner seat belt, the SRS airbag warning light AIR BAG on the instrument panel will come on for approximately 6 seconds after the ignition key has been turned to the "ON" position, and then it should turn off.**
- **If pre-tensioner seat belt is not working properly, this warning light will illuminate even if the SRS system is not functioning. If the SRS airbag warning light does not illuminate when the ignition key is turned to "ON", or if it remains illuminated after coming for approximately 6 seconds, or if it illuminates while the vehicle is being driven, please have a Hyundai authorised repairer inspect the pre-tensioner seat belts and SRS airbag system as soon as possible.**

WARNING:

- Pre-tensioners are designed to operate only one time. After activation, pre-tensioner seat belts must be replaced. All seat belts, of any type, should always be replaced after they have been worn during a collision.
- The pre-tensioner seat belt assembly mechanisms become hot during activation. Do not touch the pre-tensioner seat belt assemblies for several minutes after they have been activated.
- Do not attempt to inspect or replace the pre-tensioner seat belts yourself. This must be done by a Hyundai authorised repairer.
- Do not strike the pre-tensioner seat belt assemblies.
- Do not attempt to service or repair the pre-tensioner seat belt system in any manner.
- Improper handling of the pre-tensioner seat belt assemblies, and failure to heed the warnings to not strike, modify, inspect, replace, service or repair the pre-tensioner seat belt assemblies may lead to improper operation or inadvertent activation and serious injury.
- Always wear seat belts when driving or riding in a motor vehicle.

B240D01GK-EAT

(Not all models)

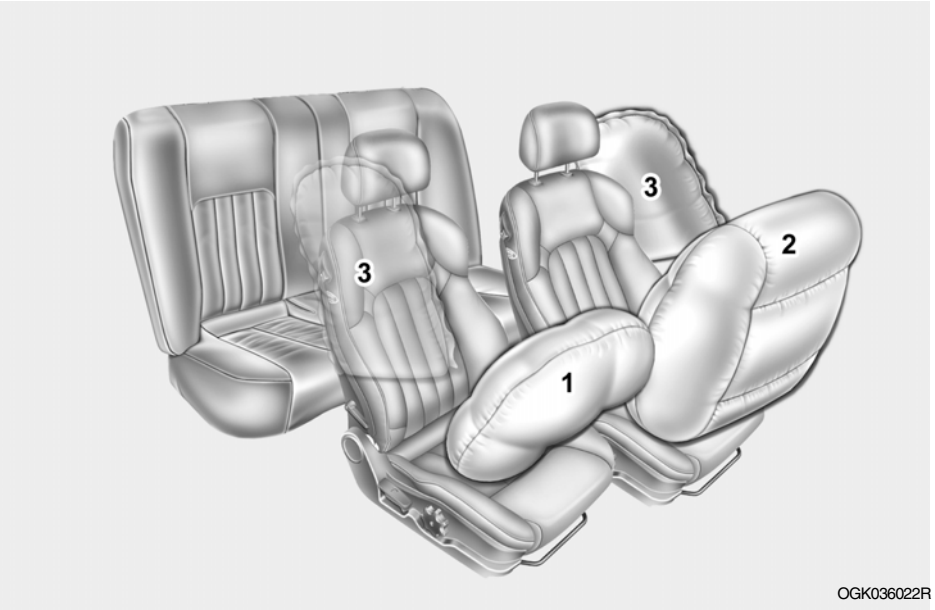

1. Driver's front airbag
2. Passenger's front airbag
3. Front side impact airbag

B240A01GK-EAT

Driver's and Passenger's Front Airbag

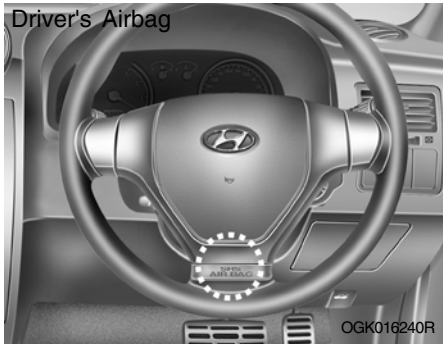

Your Hyundai is equipped with a Supplemental Restraint (Airbag) System. The indications of the system's presence are the letters "SRS AIR BAG" embossed on the airbag pad cover in the steering wheel and the front passenger's panel pad above the glove box.

The Hyundai SRS consists of airbags installed under the pad covers in the centre of the steering wheel and the front passenger's panel above the glove box.

The purpose of the SRS is to provide the vehicle's driver or the front passenger with additional protection than that offered by the seat belt system alone, in case of a frontal impact of sufficient severity.

NOTE:
Be sure to read information about the SRS on the labels provided on the front side of the sun visor and in the glove box.

WARNING:

- **As its name implies, the SRS is designed to work with, and be supplemental to, the driver's and the passenger's three point seat belt systems and is not a substitute for them. Therefore your seat belts must be worn at all times whilst the vehicle is in motion. The airbags deploy only in certain frontal impact conditions severe enough to likely cause significant injury to the vehicle occupants.**
- **The SRS is designed to deploy the airbags only when an impact is sufficiently severe and when the impact angle is less than 30° from the forward longitudinal axis of the vehicle and will not deploy in side, rear or rollover impacts. Additionally, the airbags will only deploy once. Thus, seat belts must be worn at all times.**

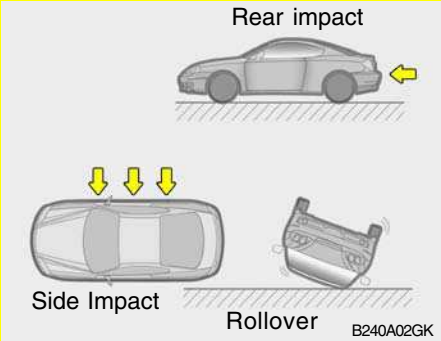

- **Front airbags are not intended to deploy in side-impact, rear-impact or rollover crashes. In addition, airbags will not normally deploy in frontal crashes below the deployment threshold speed.**

- **For maximum safety protection in all types of crashes, all occupants including the driver should always wear their seat belts whether or not an airbag is also provided at their seating position to minimise the risk of severe injury or death in the event of a crash. Do not sit or lean unnecessarily close to the airbag whilst the vehicle is in motion.**
- **The SRS airbag system must deploy very rapidly to provide protection in a crash. If an occupant is out of position because of not wearing a seat belt, the airbag may forcefully contact the occupant causing serious or fatal injuries.**

B240B03GK-EAT

SRS Components and Functions

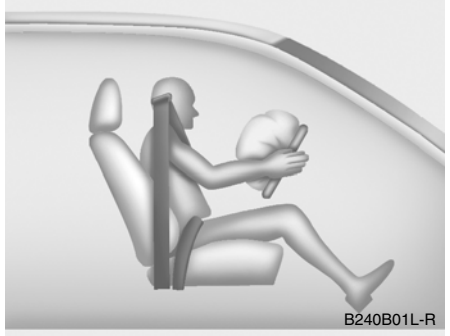

The SRS consists of the following components:

- Driver's Side Airbag Module
- Passenger's Side Airbag Module
- SRS Service Reminder Indicator (SRI)
- SRS Control Module (SRSCM)

The SRSCM continually monitors all elements while the ignition is "ON" to determine if a frontal or near-frontal impact is severe enough to require airbag deployment.

The SRS service reminder indicator (SRI) on the instrument panel will illuminate for approximately 6 seconds after the ignition key is turned to the "ON" position or after the engine is started, after which the SRI should go out.

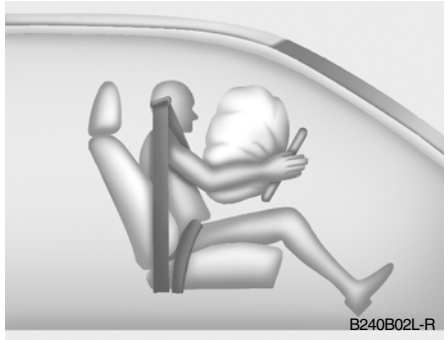

The airbag modules are located both in the centre of the steering wheel and in the front passenger's panel above the glove box. When the SRSCM detects a considerable impact to the front of the vehicle, it will automatically deploy the airbags.

Upon deployment, tear seams molded directly into the pad covers will separate under pressure from the expansion of the airbags. Further opening of the covers then allows full inflation of the airbags.

A fully inflated airbag in combination with a properly worn seat belt slows the driver's or the passenger's forward motion, thus reducing the risk of head and chest injury.

After complete inflation, the airbag immediately starts deflating, enabling the driver to maintain forward visibility.

Passenger's Airbag

CAUTION:

- **Do not install or place any accessories (drink holder, cassette holder, sticker, etc) on the front passenger's panel above the glove box in the vehicle with passenger's airbag. Such objects may become dangerous projectiles and cause injury if the passenger's airbag inflates.**

- **When installing a container of liquid air freshener inside a vehicle, do not place it near the instrument cluster not on the instrument panel pad surface. If there is any leakage from the air freshener onto these areas (instrument cluster, instrument panel pad or air ventilator), it may damage these parts. If the liquid from the air freshener does leak onto these areas, wash them with water immediately.**

WARNING:

- **When the SRS is activated, there may be a loud noise and fine dust will be released throughout the vehicle. These conditions are normal and are not hazardous. However, the fine dust generated during airbag deployment may cause skin irritation. Be sure to wash your hands and face thoroughly with lukewarm water and a mild soap after an accident in which the airbags were deployed.**

- **The SRS can function only when the ignition key is in the "ON" position.**
  If the SRS is not working properly,
  (1) The SRS SRI does not come on when the ignition key is turned to the "ON" position or after the engine is started.
  (2) The SRS SRI blinks for a second and remains on after illuminating for approximately 6 seconds when the ignition key is turned to the "ON" position or after the engine is started.
  (3) The SRS SRI illuminates whilst driving.
  If this occurs, have your vehicle immediately inspected by your Hyundai authorised repairer.
- **Before you replace a fuse or disconnect a battery terminal, turn the ignition key to the "LOCK" position or remove the ignition key. Never remove or replace the air bag related fuse(s) when the ignition key is in the "ON" position. Failure to heed this warning will cause the SRS SRI to illuminate.**

B990B01MC-EAT

Side Impact Airbag (Not all models)

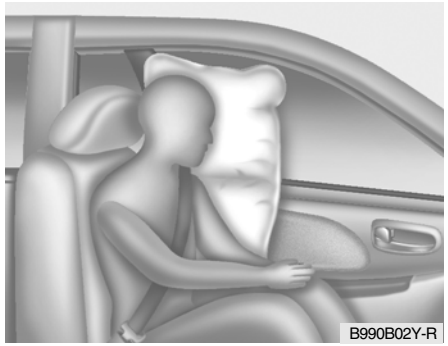

Your Hyundai is equipped with a side impact airbag in each front seat. The purpose of the airbag is to provide the vehicle's driver and/or the front passenger with additional protection than that offered by the seat belt alone. The side impact airbags are designed to deploy only during certain side impact collisions, depending on the crash severity, angle, speed and point of impact. The side impact airbags are not designed to deploy in all side impact situations.

Important Safety Notes on the Side Impact Airbag system

This page and the following page detail a number of safety points concerning this system which should always be observed to ensure risk of injury is reduced in an accident.

WARNING:

- **The side impact airbag is supplemental to the driver's and the passenger's seat belt systems and is not a substitute for them. Therefore your seat belts must be worn at all times whilst the vehicle is in motion. The airbags deploy only in certain side impact conditions severe enough to cause significant injury to the vehicle occupants.**
- **For best protection from the side impact airbag system and to avoid being injured by the deploying side impact airbag, both front seat occupants should sit in an upright position with the seat belt properly fastened. The driver's hands should be placed on the steering wheel at the 9:00 and 3:00 o'clock positions. The passenger's arms and hands should be placed on their laps.**
- **Do not use any accessory seat covers.**
- **Use of seat covers could reduce or prevent the effectiveness of the system.**
- **Do not install any accessories on the side or near the side impact airbag.**
- **Do not use excessive force on the side of the seat.**
- **Do not place any objects over the airbag or between the airbag and yourself.**
- **Do not place any objects (an umbrella, bag, etc.) between the front door and the front seat. Such objects may become dangerous projectiles and cause injury if the supplemental side impact airbag inflates.**
- **To prevent unexpected deployment of the side impact air bag that may result in personal injury, avoid impact to the side impact airbag sensor when the ignition key is on.**

B240C01NF-EAT

SRS Care

The SRS is virtually maintenance-free and so there are no parts you can safely service by yourself. If the SRS SRI (Service Reminder Indicator) does not come on, or continuously remains on, have your vehicle immediately inspected by your Hyundai authorised repairer.

Any work on the SRS system, such as removing, installing, repairing, or any work on the steering wheel must be performed by a qualified Hyundai technician. Improper handling of the SRS system may result in serious personal injury.

B240C01HP

WARNING:

- **Extreme Hazard! Do not use a rearward facing child restraint on a seat protected by an airbag in front of it!**
- **Do not install a child restraint system in the front passenger seat position.**
  A child restraint system must never be placed in the front seat. The infant or child could be severely injured by an airbag deployment in case of an accident.

- **Modification to SRS components or wiring, including the addition of any kind of badges to the pad covers or modifications to the body structure, can adversely affect SRS performance and lead to possible injury.**
- **For cleaning the airbag pad covers, use only a soft, dry cloth or one which has been moistened with plain water. Solvents or cleaners could adversely affect the airbag covers and proper deployment of the system.**
- **No objects should be placed over or near the airbag modules on the steering wheel, instrument panel, and the front passenger's panel above the glove box, because any such object could cause harm if the vehicle is in a crash severe enough to cause the airbags to inflate.**
- **If the airbags inflate, they must be replaced by a Hyundai authorised repairer.**

- Do not tamper with or disconnect SRS wiring, or other components of the SRS system. Doing so could result in injury, due to accidental firing of the airbags or by rendering the SRS inoperative.
- If components of the airbag system must be discarded, or if the vehicle must be scrapped, certain safety precautions must be observed. Your Hyundai authorised repairer knows these precautions and can give you the necessary information. Failure to follow these precautions and procedures could increase the risk of personal injury.
- If you sell your vehicle, make certain that this manual is transferred to the new owner.
- If your car was flooded and has soaked carpeting or water on flooring, you shouldn't try to start engine; have the car towed to Hyundai authorised repairer.

INSTRUMENT CLUSTER AND INDICATOR LIGHTS

B260A01GK-EAT

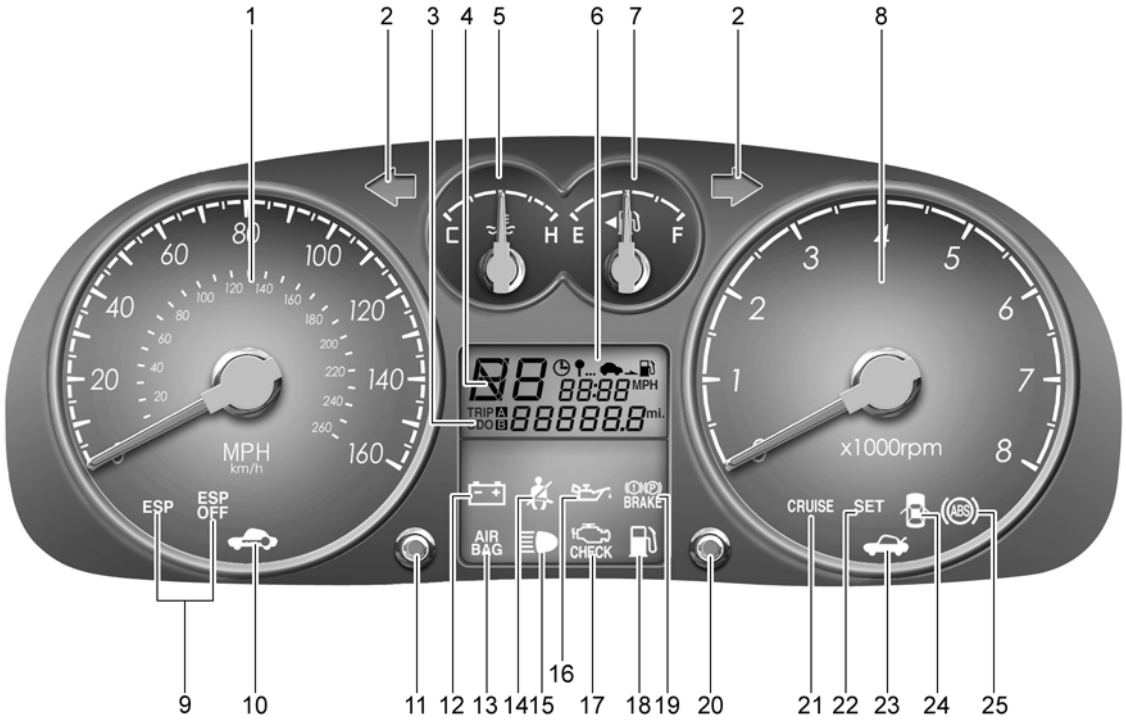

OGK016260UK

1. Speedometer
2. Turn Signal Indicator Light
3. Odometer/Trip Odometer
4. Automatic Transaxle Position Indicator Light (Not all models)
5. Coolant Temperature Gauge
6. Trip Computer (Not all models)
7. Fuel Gauge
8. Tachometer
9. Electronic Stability Program (ESP) Indicator Light (Not all models)
10. Immobiliser Warning Light
11. Trip Odometer Reset Knob
12. Charging System Warning Light
13. SRS (Airbag) Warning Light
14. Seat Belt Warning Light
15. High Beam Indicator Light
16. Oil Pressure Warning Light
17. Malfuction Indicator Light (MIL) (Not all models)
18. Low Fuel Warning Light
19. Parking Brake/Brake Fluide Level Warning Light
20. Trip Computer Reset Knob
21. CRUISE Indicator Light (Not all models)
22. CRUISE SET Indicator Light (Not all models)
23. Hatchback Door Open Warning Light
24. Door Open (Ajar) Warning Light
25. ABS Service Reminder Indicator Light (Not all models)

SB210G1-E

Turn Signal Indicator Lights

Operation of a turn signal is indicated by the warning light located in the instrument cluster. If the light fails to illuminate or does not flash, a malfunction within the turn signal system is indicated.

B265C01NF-EAT

Electronic Stability Program Indicator Lights (Not all models)

The electronic stability program indicators change operation according to the ignition switch position and whether the system is in operation or not.
They will illuminate when the ignition key is turned to the "ON" position, but should go out after three seconds. If the ESP or ESP-OFF indicator stays on, take your car to your Hyundai authorised repairer and have the system checked. See section 2 for more information about the ESP.

B260U01TB-EAT

Immobiliser Warning Light

This warning light comes on for some seconds after the ignition key is turned to the "ON" position. At this time, you can start the engine. The light goes out after the engine is running. In case this light goes out before you start the engine, you must turn to the "LOCK" position and restart the engine. In case this light blinks for five seconds when the ignition key is turned to "ON" position, this indicates that the immobiliser system is out of order. At this time, consult to the Hyundai authorised repairer.

SB210M1-E

Charging System Warning Light

The charging system warning light should illuminate when the ignition switch is turned to the "ON" position and should be extinguished when the engine is started. If the light fails to illuminate when the ignition is turned "ON" or fails to extinguish after starting the engine, the nearest Hyundai authorised repairer should be contacted. If the light illuminates whilst the vehicle is being driven, stop the vehicle as soon as it is safe to do so and check the condition of the alternator drive belt. If the belt is in place and the tension is satisfactory, the advice of a Hyundai authorised repairer should be sought.

CAUTION:
If the drive belt (generator belt) is loose, broken, or missing whilst the vehicle is driving, there may be a serious malfunction, the engine could also overheat because this belt also drives the water pump.

B260B01JM-EAT

SRS (Airbag) Service Reminder Indicator (SRI) (Not all models)

The SRS service reminder indicator (SRI) comes on for approximately 6 seconds after the ignition key is turned to the "ON" position or after the engine is started, after which it will go out.

This light also comes on when the SRS is not working properly. If the SRI does not come on, or continuously remains on after flashing for about 6 seconds when you turned the ignition key to the "ON" position or started the engine, or if it comes on whilst driving, have the SRS inspected by a Hyundai authorised repairer.

B260E01HP-GAT

Seat Belt Warning Light

The seat belt warning light blinks for 6 about seconds when the ignition key is turned from the "OFF" position to "ON" or "START".

SB210J1-E

High Beam Indicator Light

The high beam indicator light will illuminate whenever the headlights are switched to high beam of flash position.

SB210K1-E

Low Oil Pressure Warning Light

CAUTION:

If the oil pressure warning light illuminates when the engine is running, an insufficient oil pressure level for continued safe operation of the engine exists. Continued operation of the engine in this condition may result in serious engine damage.

Under normal circumstances, the light will illuminate when the ignition is turned "on" and will be extinguished when the engine is started. If the oil pressure warning light illuminates whilst the engine is running, stop the engine immediately and check the engine oil level.

If the level is insufficient, add the required amount of oil as indicated by the engine oil dipstick. If the light fails to extinguish when the engine is restarted, do not continue to operate the vehicle.
If the oil pressure light illuminates during normal operation and the cause is not an insufficient oil level, or the light fails to illuminate when the ignition is turned "on", contact the nearest Hyundai authorised repairer before further operating the vehicle.

B260N02A-EAT

Malfunction Indicator Light (Not all models)

This light illuminates when there is a malfunction of an exhaust gas related component, and the system is not functioning properly so that the exhaust gas regulation values are not satisfied. This light will also illuminate when the ignition key is turned to the "ON" position, and then it will go out in a few seconds after the engine is started. If it illuminates whilst driving, or does not illuminate when the ignition key is turned to the "ON" position, take your car to your nearest Hyundai authorised repairer and have the system checked.

SB210P1-E

Low Fuel Level Warning Light

The low fuel warning light serves to warn the driver that the remaining fuel quantity is approximately 9 litres and that the vehicle should be refuelled. If the vehicle is driven for an extended period with the low fuel warning light illuminated there exists a possibility that misfiring due to fuel shortage may occur. This situation must be avoided to prevent damage to the catalyst occurring.

B260H01GK-EAT

Parking Brake/ Low Brake Fluid Level Warning Light

WARNING:
In the event of problems being suspected with the braking system, the advice of the nearest Hyundai authorised repairer must be sought before the vehicle is driven. Driving the vehicle with either an electrical or hydraulic braking system defect may be dangerous, resulting in accident or personal injury.

Warning light operation

The parking brake/brake fluid level warning light will be illuminated whenever the ignition switch is turned to the "ON" or "START" position when the parking brake is applied and must be extinguished in a three seconds after the engine starts.
If the warning light fails to extinguish or illuminates at any other time, the vehicle must be brought to rest in a safe location and the level of brake fluid in the reservoir checked. If the fluid level is incorrect, fluid conforming to DOT 3 or DOT 4 specifications should be added.
If, after correcting the brake fluid level, the warning light continues to be illuminated, the advice of the nearest Hyundai authorised repairer must be sought before the vehicle is driven again.
The Hyundai Coupe is equipped with a diagonally split dual braking system which will ensure that in the event of one of the brake circuits becoming defective, approximately fifty per cent of the normal braking performance will be available.
If failure of one of the circuits occurs, the required amount of pedal effort, pedal travel and stopping distance will be increased. Use of the gearbox is recommended to assist in bringing the vehicle to rest. The vehicle must not be driven once brake failure has occurred until the system has been repaired and is functioning normally.
The braking system employs a vacuum servo in order that the pedal efforts are reduced. Power for the servo is derived from the engine and therefore, in the event of the engine stopping or the vehicle being towed, pedal efforts will be substantially increased.

B260Q01E-EAT

Cruise Indicator Light (Not all models)

The cruise indicator light in the instrument cluster is illuminated when the cruise control main switch on the end of the barrel is pushed.
The indicator light does not illuminate when the cruise control main switch is pushed a second time.
Information about the use of cruise control is beginning on page 1-76.

B260R01E-EAT

CRUISE SET Indicator Light (Not all models)

The set indicator light in the instrument cluster is illuminated when the cruise control switch is pushed downward to "SET (COAST)".
The set indicator light does not illuminate when the control switch is in the "CANCEL" position.

B260K01F-EAT

Hatchback Door Open Warning Light

This light remains on unless the hatchback door is completely closed and latched.

SB2100I-E

Door Open (Ajar) Warning Light

The door ajar warning light indicates that a door is not correctly closed. Ensure that the light is extinguished prior to driving the vehicle.

B260P02Y-EAT

ABS Service Reminder Indicator (SRI) (Not all models)

When the key is turned to the "ON" position, the Anti-Lock Brake System SRI will come on and then go off in a few seconds. If the ABS SRI remains on, comes on whilst driving, or does not come on when the key is turned to the "ON" position, this indicates that there may be a problem with the ABS.
If this occurs, have your vehicle checked by your Hyundai authorised repairer as soon as possible. The normal braking system will still be operational, but without the assistance of the anti-lock brake system.

WARNING:
If both the ABS SRI and Parking Brake/Brake fluid level warning lights remain "ON" or come on whilst driving, there may be a problem with E.B.D (Electronic Brake Force Distribution). If this occurs, avoid sudden stops and have your vehicle checked by your Hyundai authorised repairer as soon as possible.

SB210S1-E

BRAKE PAD WEAR INDICATOR

The front brake disc pads are fitted with an audible wear indicator which will cause a high pitched noise to be emitted when the remaining amount of friction lining is below the specified value. When the wear indicator is heard, the brake pads should be replaced without delay to avoid damage occurring to the brake discs and a severe reduction in braking efficiency.

SB215A2-E

FUEL GAUGE

The fuel gauge indicates the quantity of fuel remaining in the fuel tank.

NOTE:

- **The fuel gauge is not intended to give other than an approximate indication of the fuel level and is unsuitable for the purposes of calculating fuel consumption figures.**
- **The " ◂⛽ " symbol means the fuel filler flap is placed on the left side of the vehicle.**

B290A02A-EAT

COOLANT TEMPERATURE GAUGE

WARNING:
Never remove the radiator cap when the engine is hot. The engine coolant is under pressure and could erupt and cause severe burns. Wait until the engine is cool before removing the radiator cap.

The needle on the engine coolant temperature gauge should stay in the normal range. If it moves across the dial to "H" (HOT), pull over and stop as soon as possible and turn off the engine. Then open the bonnet and check the coolant level and the water pump drive belt. If you suspect cooling system trouble, have your cooling system checked by Hyundai authorised repairer as soon as possible.

B300A01Y-EAT

SPEEDOMETER

Your Hyundai's speedometer is calibrated in miles per hour and kilometers per hour.

B330A03A-AAT

TACHOMETER

The tachometer registers the speed of your engine in revolutions per minute (rpm).

CAUTION:
The engine should not be raced to such a speed that the needle enters the red zone on the tachometer face. This can cause severe engine damage and may void your warranty.

B310B01GK-EAT

ODOMETER/TRIP ODOMETER

Function of digital odometer/trip odometer

Pushing in the reset switch on the right side of speedometer when the ignition switch is turned "ON" will display the following sequence:

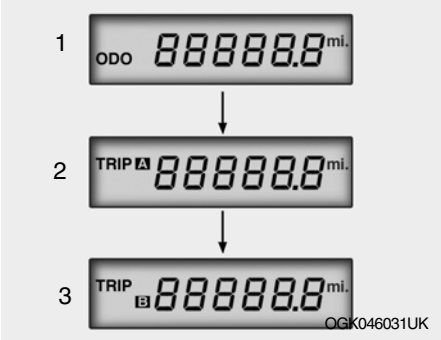

1. Odometer

The odometer records the total driving distance in miles, and is useful for keeping a record for maintenance intervals.

NOTE:
Any alteration of the odometer may void your warranty coverage.

2,3 Trip odometer

Records the distance of 2 trips in miles.
TRIP A: First distance you have traveled from your origination point to a first destination.
TRIP B: Second distance from the first destination to the final destination.

To shift from TRIP A to TRIP B, press the reset switch. When pressed for 1 second, it will reset to 0.

B400B03GK-EAT

(Not all models)

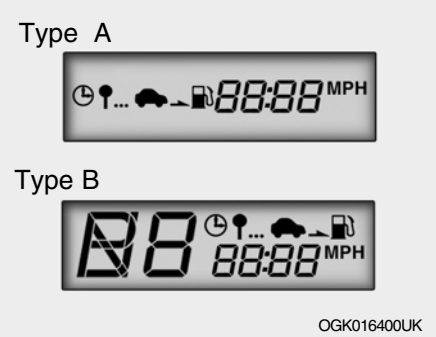

The trip computer is a microcomputer-controlled driver information gauge that displays information related to driving, such as estimated distance to empty, average speed and drive time on the LCD.

Reset Switch

- o The reset switch is used to zero the multi-functional display mode.
- o Pushing in the reset switch on the left side of tachometer changes the display as follows;

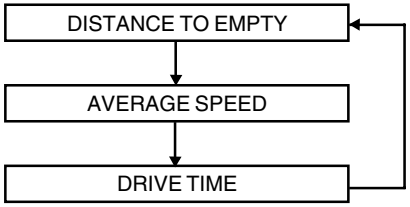

1. Distance to Empty

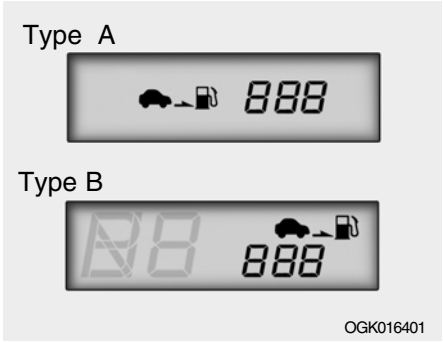

- o This mode provides the estimated distance to empty from the current fuel level in the fuel tank.
- o The trip computer may not register additional fuel if less than 6 litres of fuel are added to the vehicle.
- o When the battery has been reinstalled after being discharged or disconnected, drive more than 20 miles for an accurate distance to empty.

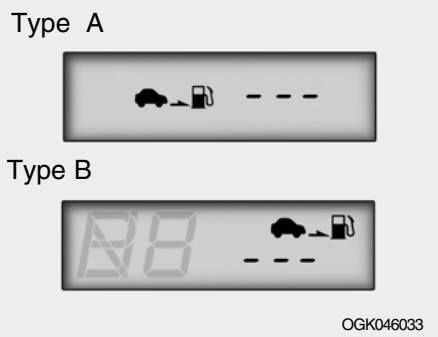

o When the distance to empty is less than 30 miles, the distance to empty digits (---) will blink until more fuel is added.

NOTE:

- **The distance to empty can differ from the actual tripmeter according to driving conditions.**
- **The distance to empty can vary according to the driving conditions, driving pattern or vehicle speed.**

2. Average Speed (MPH)

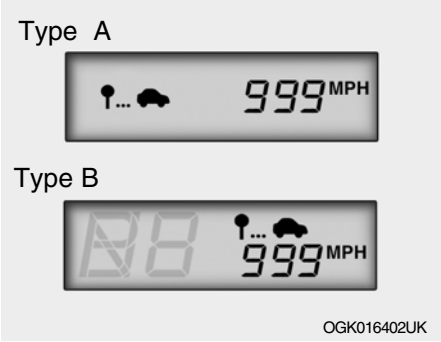

o This mode indicates the average speed travelled since the last average speed reset.

o To reset the average speed to zero, press and hold the reset switch for more than 1 second whilst the average speed is being displayed.

3. Drive Time

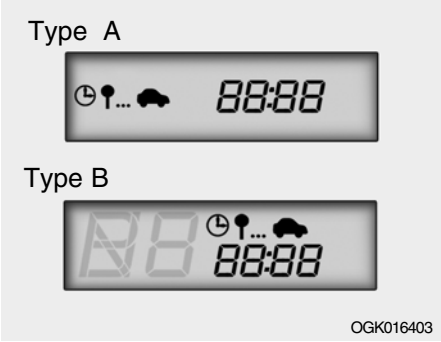

o This mode indicates the drive time travelled since the last drive time reset.

o To reset the drive time to zero, press and hold the reset switch for more than 1 second whilst the drive time is being displayed.

B330C01GK-EAT

(Not all models)

Multi gauge is consists of torque gauge, instantaneous fuel consumption gauge and volt gauge.

B330C01GK

Torque Gauge

It shows instantaneous change of the torque by rpm.

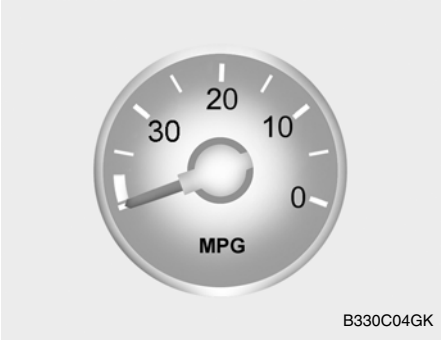

B330C04GK

Instantaneous Fuel Consumption Gauge

It shows instantaneous fuel consumption according to the driving condition. The more indicated figure is low, the more it indicates efficient driving situation.

B330C03GK

Volt Gauge

It shows moment volt change and makes for diver correspond to low volt situation.

MULTI FUNCTION SWITCH

SB220A1-E

Turn Signal Operation

To signal an intention to turn right, the switch lever should be pressed down. To signal an intention to turn left, the switch lever should be pushed upwards. In both instances, the turn signal lights and the instrument cluster warning light will flash. Upon completion of the manoeuvre, the lever will, under normal circumstances, return to the "OFF" position. However, if the manoeuvre involved only a small movement of the steering wheel, the signal may need to be cancelled manually. If either turn signal indicator flashes more rapidly than normal or refuses to flash at all, a malfunction of the turn signal system may exist.

SB220B1-E

Lane Change Signal

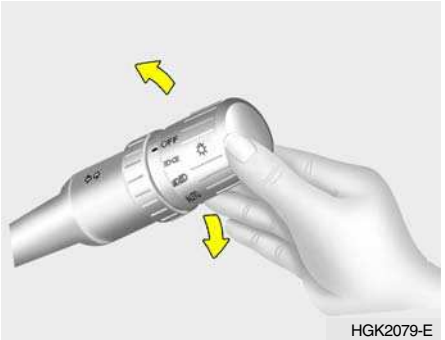

HGK2079-E

To indicate an intention to change lanes, moving the lever slightly towards the direction of the relevant turn signal will cause the turn signal lights to flash. When the lever is released, it will return to the "OFF" position.

B340C05FC-EAT

LIGHTING SWITCH

HGK2074-E

The vehicle sidelights and headlights are operated by rotating the end of the turn signal switch barrel. To operate the side lights, rotating the switch to the first detent with ignition switch at the "OFF" position will cause the lights to illuminate. To operate the headlights, the turn signal switch barrel should be rotated to the second detent. The headlights will only operate when the ignition switch is at the "ON" position. If the ignition switch is turned to the "OFF" position, only the side lights will function.

NOTE:
The ignition must be in the "ON" position to turn on the headlights.

Side light auto cut (Not all models)

- o The purpose of this feature is to prevent the battery from being discharged. The system automatically turns off the headlights and side lights when the driver removes the ignition key and opens the driver-side door.
- o With this feature, the side light will be turned off automatically if the driver parks on the side of road at night.
  If necessary, to keep the lights on when the ignition key is removed, perform the following :
  1) Open the driver-side door.
  2) Turn the side lights OFF and ON again using the light switch on the steering column.

SB220D1-E

HIGH AND LOW BEAM

To turn on the headlight high beams, push the lever forward (away from you). For low beams, pull the lever back (toward you). The appropriate headlight beam indicator light will come on at the same time.

B340G01LZ-EAT

Auto Light (Not all models)

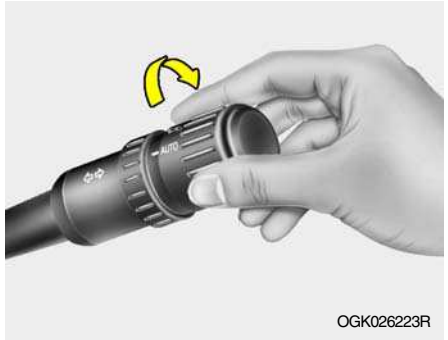

To operate the automatic light feature, turn the barrel on the end of the multi-function switch. If you set the multi-function switch to "AUTO", the side lights and headlights will be turned automatically on or off according to external illumination.

NOTE:
Switch on car light manually in foggy, cloudy and rainy conditions.

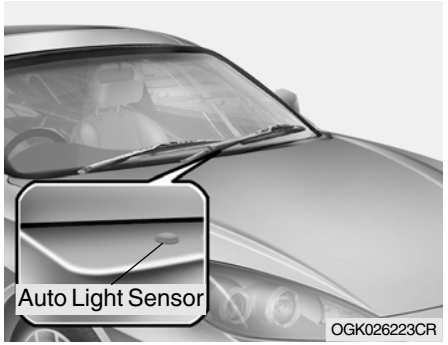

NOTE:

- **Never place anything over sensor located on the instrument panel, this will ensure better auto light system control.**
- **Don't clean the sensor using a window cleaner.**
- **If your vehicle has window tint or other types of coating on the front windscreen, the AUTO light system may not work properly.**

SB220E1-E

Headlight Flasher

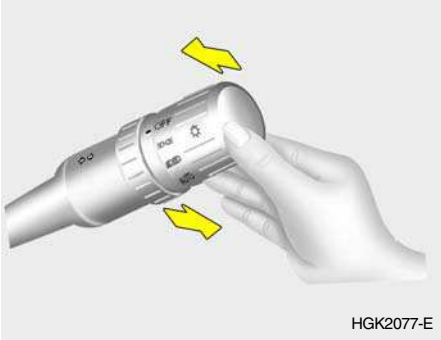

The headlight may be flashed by pulling the turn signal switch lever towards the steering wheel. The headlight will be extinguished when the switch is released.

WINDSCREEN WIPER/ WASHER SWITCH

B350A01A-EAT

The windscreen wiper switch, dependent upon model, has three operating positions.

1. Intermittent wiper operation.
2. Low speed operation.
3. High speed operation.

NOTE:

To prevent damage to the wiper system, do not attempt to wipe away heavy accumulations of snow or ice. Accumulated snow and ice should be removed manually. If there is only a light layer of snow or ice, operate the heater in the defrost mode to melt the snow or ice before using the wiper.

B350B01O-EAT

Windscreen Washer Operation

To use the windscreen washer, pull the wiper/washer lever toward the steering wheel. When the washers are operated, the wipers automatically make two passes across the windscreen. The washer continues to operate until the lever is released.

NOTE:

- **Do not operate the washer for more than 15 seconds continuously or when the fluid reservoir is empty.**
- **In icy or snowy weather, ensure that the wiper blades are not frozen to the glass prior to operating the wipers.**
- **In areas where water freezes in winter, use windscreen washer antifreeze.**

Single Sweep Operation

If a single wipe is desired, move the windscreen wiper and washer control lever up.

B350C01S-DAT

Adjustable Intermittent Wiper Operation

To use the intermittent wiper feature, place the wiper switch in the "INT" position. With the switch in this position, the interval between wipes can be varied from approximately 2 to 10 seconds by turning the interval adjuster barrel.

B390A01E-EAT

Rear Window Wiper and Washer

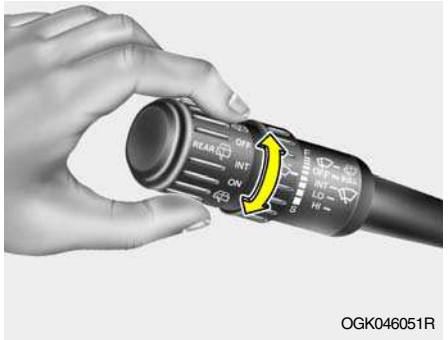

OGK046051R

1. : The rear window wiper starts to operate three times after the washer fluid sprays onto the rear window.
2. OFF
3. INT: The interval between wipes operates every 5 seconds intermittently.
4. ON : The rear window wiper starts to operate continuously.
5. : The washer fluid will be sprayed onto the rear window and the wiper operates whilst the rear window wiper barrel is placed in this position.

NOTE:
Do not operate the washer continuously for more than 15 seconds or when the fluid reservoir is empty; this could damage the system. Do not operate the wiper when the window is dry; this can result in scratching as well as premature wiper blade wear.
For the reason stated above,do not operate the washer when the washer fluid reservoir is empty.

B360B01A-AAT

Front Fog Light Switch

OGK046052R

To turn on the front fog lights, push the switch. They will light when the headlight switch is in the second position and the ignition key is in the "ON" position.

B360A01Y-GAT

Rear Fog Light Switch

To turn on the rear fog lights, push the switch. They will light when the headlight switch is in the second position and the key is in the "ON" position.

HAZARD WARNING SYSTEM

SB240A1-E

The hazard warning system should be used whenever it becomes necessary to stop the car in a hazardous location. The hazard warning system is operated by depressing the switch at which time all turn signal lamps will flash simultaneously and the turn signal warning lamps located within the instrument cluster will flash simultaneously.
The hazard warning system may be turned off by depressing the switch again.

HEATED REAR WINDOW

B380A02A-EAT

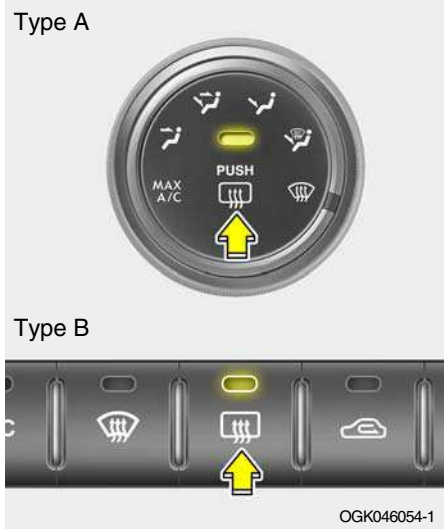

The rear window defogger is turned on by pushing in on the switch. At the same time, the rear window defogger indicator light on the switch is turned on. To turn the defogger off, push in on the switch a second time. The rear window defogger automatically turns itself off after about 20 minutes. To restart the defogger cycle, push in on the switch again after it has turned itself off.

CAUTION:
The inside of the rear windscreen should never be cleaned with a hard or sharp implement since damage to the heating element may occur. The glass should only be cleaned with a soft cloth or chamois leather with the use only of a mild detergent or proprietary glass cleaner where necessary. Only horizontal movement of the cloth should be made when cleaning the glass and care should be exercised to ensure that the heating elements are not damaged by rings or jewellery whilst the glass is being cleaned.

NOTE:
The engine must be running for the rear window defroster to operate.

DIGITAL CLOCK

B400A01GK-GAT

There are three control buttons for the digital clock. Their functions are:

H - Push "H" to advance the hour indicated.
M - Push "M" to advance the minute indicated.
R - Push "R" to reset minutes to ":00" to facilitate resetting the clock to the correct time. When this is done:
Pressing "R" between 11 : 01 and 11 : 29 changes the readout to 11 : 00.
Pressing "R" between 11 : 30 and 11 : 59 changes the readout to 12 : 00.
Push the "R" button for 3 seconds to display a 12 or 24-hour clock.

INSTRUMENT PANEL ILLUMINATION CONTROL

SB280A1-E

(Not all models)

The level of illumination intensity of the instrument panel may be varied by turning the control shown. The instrument panel will be illuminated when the side light or headlights are in operation.

CIGAR LIGHTER

B420A02A-EAT

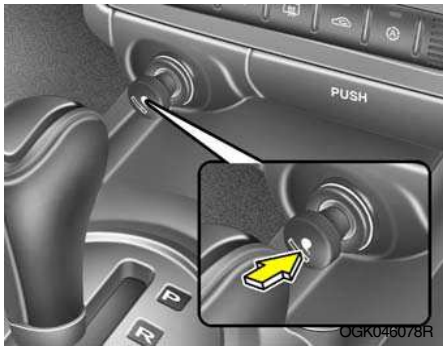

For the cigar lighter to work, the key must be in the "ACC" or the "ON" position.
To use the cigar lighter, push the lighter all the way into its socket. When the element is heated, the lighter will pop out into the "ready" position.
Do not hold the cigar lighter at the depressed position which may result in damage to the vehicle wiring or an electrical fire.
If it is necessary to replace the cigar lighter, use only a genuine Hyundai replacement part.

CAUTION:
Do not use electric accessories or equipment other than the Hyundai genuine parts in the socket.

ASHTRAY

B430A01GK-AAT

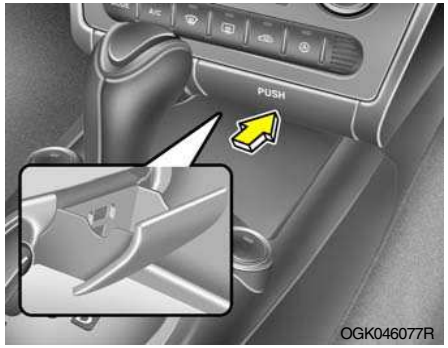

The front ashtray may be opened by pushing and releasing the ashtray door at its top edge.
To remove the ashtray in order to clean it, the metal ash receptacle should be lifted out from the ashtray door. Do not attempt to remove the entire ash-tray door assembly or damage will result. To reinstall it, place it in the proper position and press it down in the ashtray door. The ashtray lamp will only illuminate when the exterior body lights are switched on.

DRINK HOLDER

B450A02GK-EAT

(Not all models)

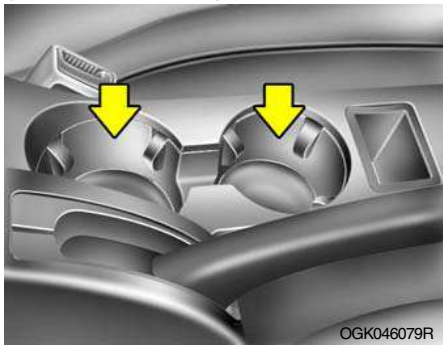

The drink holder is used for holding cups or cans.
To use the passenger's drink holder, push the drink holder.

WARNING:

- **Use caution when using the drink holders. A spilled beverage that is very hot can injure you or your passengers. Spilled liquids can damage interior trim and electrical components.**
- **Do not place objects other than cups or cans in the drink holder. Such objects can be thrown out in the event of a sudden stop or an accident, possibly injuring the passengers in the vehicle.**

HEADLIGHT LEVELING DEVICE SYSTEM

SB320A2-F

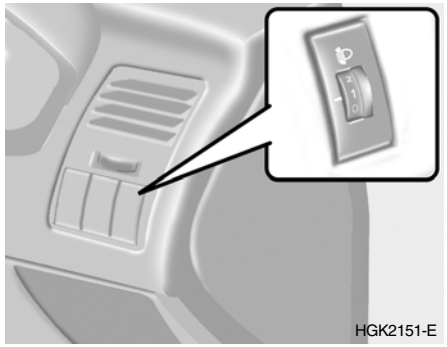

To adjust the headlight beam level according to the number of the passengers and the loading weight in the luggage area, turn the beam leveling switch. The higher the number of the switch position, the lower the headlight beam level.
Always keep the headlight beam at the proper leveling position, or headlights may dazzle other road users.
Listed below are the examples of recommended switch settings.
For loading conditions other than those listed below, adjust the switch position so that the beam level may be the nearest as the condition obtained according to the list.

Loading condition	Switch position
Driver only	0
Driver + front passenger	0
Full passengers (including driver)	1
Full passengers (including driver) + full boot loading (or light trailer loading)	2
Driver + full boot loading (or maximum trailer loading)	3

SUNSHADE

B470A01GK-EAT

(Not all models)

The sunshade can be opened and closed by sliding it forward or rearward when the sunroof is closed. The sunshade will open automatically when the sunroof is opened, but it must be closed manually.

WARNING:
Never adjust the sunshade whilst driving. This could result in loss of control and an accident that may cause death, serious injury, or property damage.

SUNROOF

B460A01S-EAT

(Not all models)

The sunroof can be operated with the ignition key in the "ON" position.

B460B03GK-GAT

Opening the Sunroof System

The sunroof can be electrically opened or closed with the ignition key in the "ON" position. The sunroof is moved to its fully open position by pushing the "⇧" button, and to stop at the desired position, push in any buttons (⇧ , ⬇ , Up, Down). To close, press and hold the "⬇" button.

Release the button when the sunroof reaches the desired position.

WARNING:
Be careful that someone's head, hands and body are not trapped by a closing sunroof.

B460C01GK-EAT

Tilting the Sunroof System

To use the auto tilt feature, press the UP button on the overhead console. The sunroof will tilt all the way open. To stop the sunroof tilting at any point, press any sunroof control button.

To close the sunroof, press the DOWN button on the overhead console and hold it until the sunroof is closed.

NOTE:
After washing the car or after there is rain, be sure to wipe off any water that is on the sunroof before operating it.

WARNING:
- **Do not close a sunroof if anyone's hands, arms or body are between the sliding glass and the sunroof sash, as this could result in injury.**
- **Do not place your head or arms out of the sunroof opening at any time.**
- **Whilst the vehicle is moving, always keep the head, hands and other parts of the body of all occupants away from the roof opening. Otherwise, you could be seriously injured if the vehicle stops suddenly or if the vehicle is involved in an accident.**

CAUTION:

- **Do not open the sunroof in severely cold temperature or when it is covered with ice or snow.**
- **Periodically remove any dirt that may have accumulated on the guide rails.**
- **Do not press any sunroof control button longer than necessary. Damage to the motor or system components could occur.**

B460D03GK-EAT

Manual Operation of Sunroof

If the sunroof does not electrically operate:

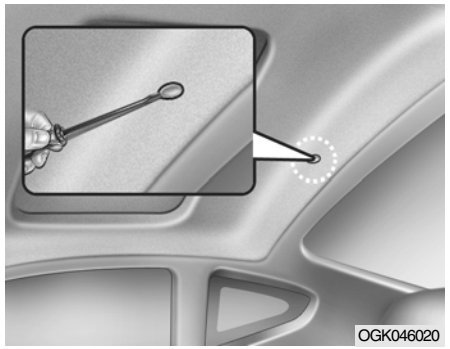

1. Remove the cap located in the rear roof panel by using a coin or driver.

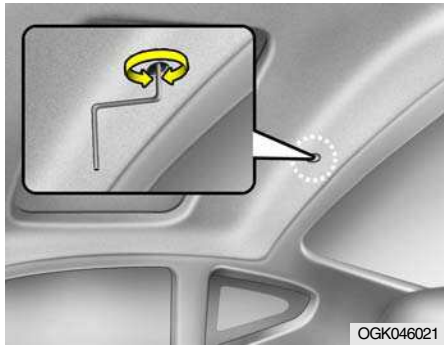

2. Insert the hexagonal head wrench provided with the vehicle into the socket. This wrench can be found in the vehicle's boot or glove box.
3. Push and turn the wrench clockwise to open or counter-clockwise to close the sunroof.

B460E03GK-GAT

Resetting the Sunroof System

If the battery has been recharged, disconnected or if the sunroof is operated with the hexagonal head wrench manually, you may need to reset the sunroof.

To do this;

1. Turn the ignition switch "OFF".
2. With pressing "⇧" "up" button at the same time, turn the ignition switch "ON".

   The resetting is failed when the ignition key to the "OFF" within 1.5 seconds.

3. If the sunroof is set like this, the sunroof is reset with tilting up/down automatically once for all.

CAUTION:
If the sunroof is not reset, it may not be operated properly.

MAP LIGHT

B480A02GK-EAT

(1) Push in the map light switch to turn on the front passenger side light.
(2) In the "DOOR" position, the interior courtesy light comes on when any door is opened regardless of the ignition key position. The light goes out gradually 6 seconds after the door is closed.
(3) Push in the map light switch to turn on the driver side light.

SPECTACLE CASE

B491A03O-EAT

(Not all models)

The spectacle case is located on the front overhead console.
Push the end of cover to open the spectacle case.

WARNING:

- **Do not keep objects such as sharp or unsuitable things inside the spectacle case. Such objects can be thrown out in the event of a sudden stop or an accident, possibly injuring the passengers in the vehicle.**
- **Do not open the spectacle case whilst the vehicle is moving. The rear view mirror of the vehicle can be blocked by an open spectacle case.**

GLOVE BOX

B500A01A-EAT

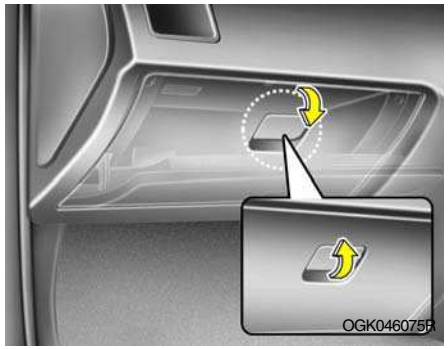

WARNING:
To avoid the possibility of injury, the glove box lid must be kept closed whilst the vehicle is in motion.

- To open the glove box, pull the glove box release lever.

B500B01NF-GAT

Illuminated Glove Box

Opening the glove box will automatically turn on the light when the multi-function switch is turned to the first position.

EXTERIOR REARVIEW MIRROR

YB270B2-E

Electric Type

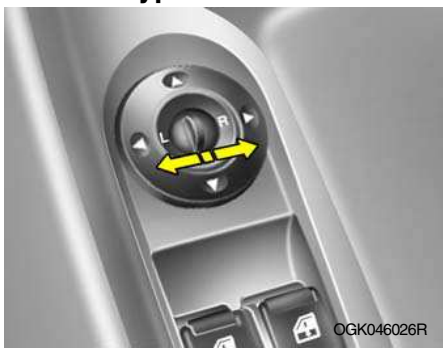

The outside rearview mirrors can be adjusted in any direction to give the maximum rearview vision.
The remote control outside rearview mirror switch controls the adjustments for both right and left door mirror.

To adjust the position of either mirror:

1. Move the selecting switch to the right or left to activate the adjustable mechanism for the corresponding door mirror.
2. Adjust mirror angle by depressing the appropriate perimeter switch as illustrated.

CAUTION:

- **Do not operate the switch continuously for an unnecessary length of time.**
- **Scraping ice from the mirror face could cause permanent damage. To remove any ice, use a sponge, soft cloth or approved de-icer.**

WARNING:

Be careful when judging the size or distance of any object seen in the passenger side rearview mirror. It is a convex mirror with a curved surface. Any objects seen in this mirror are closer than they appear.

B510C01HP-EAT

OUTSIDE REARVIEW MIRROR HEATER (Not all models)

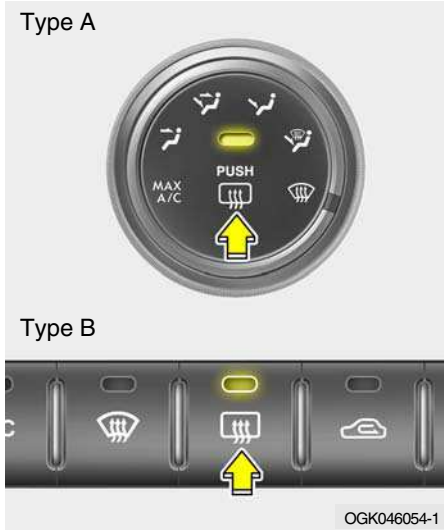

The outside rearview mirror heater is actuated in connection with heated rear window. So, to heat the outside rearview mirror glass, push in the switch for heated rear window.
The rearview mirror glass will be heated for defrosting or defogging and will give you improved rear vision in all weather conditions.

Push the switch again to turn the heater off.
The outside rearview mirror heater automatically turns itself off after 20 minutes.

B510C01A-EAT

FOLDING THE OUTSIDE REARVIEW MIRRORS

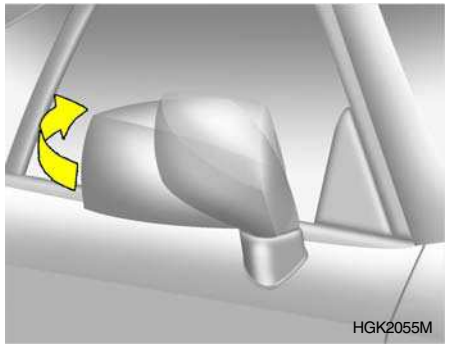

To fold the outside rearview mirrors, push them towards the rear.
The outside rearview mirrors can be folded rearward for parking in restricted areas.

WARNING:
Do not adjust or fold the outside rearview mirrors whilst the vehicle is moving. This could result in loss of control, and an accident causing death, serious injury or property damage.

DAY/NIGHT INSIDE REARVIEW MIRROR

SB370A1-E

The interior mirror is of the day/night type to enable the glare of headlamps from following vehicles to be eliminated during night time driving.
The tab located at the bottom of the mirror should be set to the position nearest the windscreen for normal day time driving, and flipped towards the rear of the vehicle to eliminate glare during night time driving. To adjust the field of vision, the mirror may be moved by hand upon the mounting.

NOTE:
The mirror should always be adjusted prior to setting the vehicle in motion.

B520B02O-EAT

Electric type (Not all models)

The electric type day/night inside rear-view mirror automatically controls the glare of headlights of the car behind you.

1. Pressing the ⏻ button turns the auto-dimming function OFF which is indicated by the green Status Indicator LED turning off.
2. Pressing the ⏻ button again turns the auto-dimming function ON which is indicated by the green Status Indicator LED turning on.

NOTE:
The mirror defaults to the "ON" position each time the vehicle is started.

PARKING BRAKE

B530A03A-EAT

The parking brake must always be set when the vehicle is to be left unattended. When the parking brake is applied, and the ignition key is at the "ON" position, the parking brake warning light will be illuminated. Before driving the vehicle, the parking brake must be fully released and the warning light extinguished.

Applying the parking brake

To engage the parking brake, first apply the foot brake and then without pressing the release button in, pull the parking brake lever up as far as possible.

In addition it is recommended that when parking the vehicle on a gradient, the shift lever should be positioned in the appropriate low gear on manual transaxle vehicles or in the P (Park) position on automatic transaxle vehicles.

CAUTION:
Driving with the parking brake applied will cause excessive brake pad (or lining) and brake rotor wear.

Releasing the parking brake

To release the parking brake, first apply the foot brake and pull up the parking brake lever slightly. Secondly, depress the release button and lower the parking brake lever whilst holding the button.

WARNING:
Whenever leaving or parking the vehicle, always apply the parking brake fully and engage the appropriate low gear (Park position for automatic transmission models). Failure to apply the parking brake correctly could result in the vehicle moving inadvertently.

HIGH-MOUNTED REAR STOP LIGHT

B550A01S-DAT

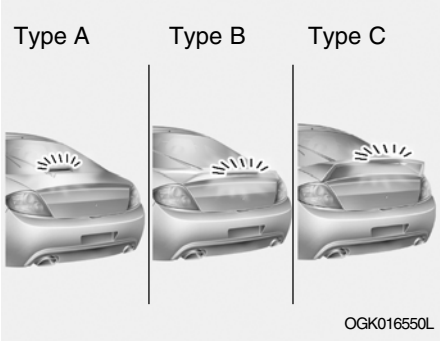

In addition to the lower-mounted rear stopl ights on either side of the car, the high mounted rear stop light in the centre of the rear window or inserted in the rear spoiler also comes on when the brakes are applied.

FRONT DOOR EDGE WARNING LIGHT

SB410A1-E

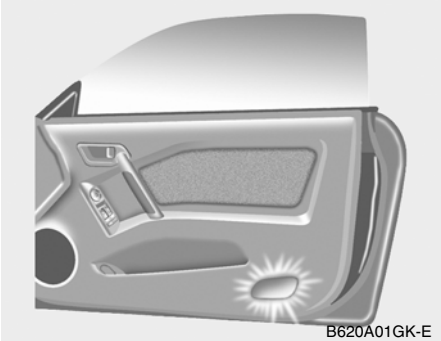

The red door edge warning light which serves to indicate an open door to following traffic in conditions of darkness illuminates whenever the door is open.

BONNET RELEASE

B570A01GK-EAT

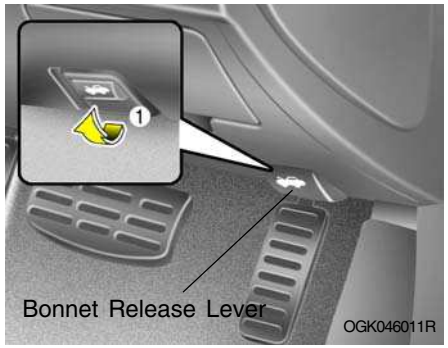

1. Pull the release lever to unlatch the bonnet.

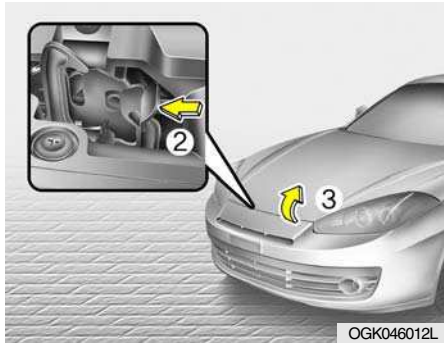

2. Press the safety hook lever up and lift the bonnet.
3. Raise the bonnet by hand.

When closing the bonnet, slowly close the bonnet and make sure it locks into place.

WARNING:

- **Always double check to be sure that the bonnet is firmly latched before driving away. If it is not latched, the bonnet could fly open whilst the vehicle is being driven, causing a total loss of visibility, which might result in an accident.**
- **Do not move the vehicle with the bonnet in the raised position, as vision is obstructed and the bonnet could fall or be damaged.**

REMOTE FUEL FILLER FLAP RELEASE

B560A01MC-EAT

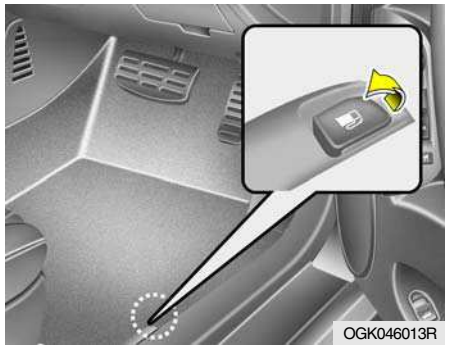

The fuel filler flap may be opened from inside the vehicle by pulling up on the fuel filler flap release.

NOTE:

If the fuel-filler flap will not open because ice has formed around it, lightly tap or push on the lid to break the ice and release the lid. Do not lever the flap. If necessary, spray around the flap with an approved de-icer fluid (do not use radiator anti-freeze) or move the vehicle to a warmer area and allow the ice to melt.

WARNING:

- **Fuel vapors are dangerous. Before refueling, always stop the engine and never allow sparks or open flames near the filler area. If you need to replace the filler cap, use a genuine Hyundai replacement part.**
  If you open the fuel filler cap during high ambient temperatures, a slight "pressure sound" may be heard. This is normal and not a cause for concern.
  Whenever you open the fuel filler cap, turn it slowly.

o Automotive fuels are flammable/ explosive materials. When refueling, please note the following guidelines carefully. Failure to follow these guidelines may result in severe personal injury, severe burns or death by fire or explosion.
- Before refueling always note the location of the Emergency Fuel Shut-Off, if available, at the fuel station facility.
- Before touching the fuel nozzle or fuel filler cap, you should eliminate potentially dangerous static electricity discharge by touching another metal part of the front of the vehicle, a safe distance away from the fuel filler neck, nozzle, or other fuel source.
- Do not get back into a vehicle once you have begun refueling. Do not touch, rub or slide against any item or fabric (polyester, satin, nylon, etc.) capable of producing static electricity. Static electricity discharge can ignite fuel vapors resulting in explosion. If you must re-enter the vehicle, you should once again eliminate potentially dangerous static electricity discharge by touching a metal part of the vehicle, away from the fuel filler neck, nozzle or other fuel source.
- When using a portable fuel container be sure to place the container on the ground prior to refueling. Static electricity discharge from the container can ignite fuel vapors causing a fire. Once refueling has begun, contact with the vehicle should be maintained until the filling is complete. Use only portable fuel containers designed to carry and store fuel.
- Do not use cellular phones around a fuel station or whilst refueling any vehicle. Electric current and/or electronic interference from cellular phones can potentially ignite fuel vapors causing a fire. If you must use your cellular phone use it in a place away from the fuel station.
- When refueling always shut the engine off. Sparks produced by electrical components related to the engine can ignite fuel vapors causing a fire. Always insure that the engine is OFF before and during refueling. Once refueling is complete, check to make sure the fuel filler cap and door are securely closed, before starting the engine.
- Do not light any fire around a fuel station. DO NOT use matches or a lighter and DO NOT SMOKE or leave a lit cigarette in your vehicle whilst at a gas station especially during refueling. Automotive fuel is highly flammable and can, when ignited, result in explosion by flames.
- If a fire breaks out during refueling, leave the vicinity of the vehicle, and immediately contact the manager of the fuel station or contact the police and local fire department. Follow any safety instructions they provide.

HATCHBACK DOOR

SB450A2-E

Remote Hatchback Door Release

The hatchback door may be opened by pulling the lever to release the lock. The hatchback door should be closed by depressing the lid firmly until the latch engages. Ensure that hatchback door is securely latched before setting the vehicle in motion.

WARNING:
The hatchback door should always be kept completely closed whilst the vehicle is in motion. If it is left open or ajar, poisonous exhaust gases may enter the car resulting in serious illness or death to the occupants. See additional warnings concerning exhaust gases on page 2-2.

SB450C2-E

To Unlock Using the Key

To open the hatchback door using the ignition key, insert the key into the lock barrel and turn clockwise to release the latch. The hatchback door compartment light will illuminate whenever the hatchback door is opened.

B540D01GK-EAT

When you close the hatchback door

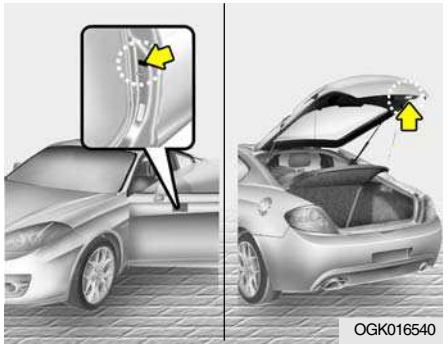
OGK016540

HGK227

WARNING:
Do not close an open hatchback door whilst a person(s) is sitting upright on the rear seat. The hatchback door or hatchback door glass may contact the head of a person sitting upright on the rear seat. Closing the hatchback door onto a person's head may cause serious injuries, including death.

SUNVISOR

B580A01GK-EAT

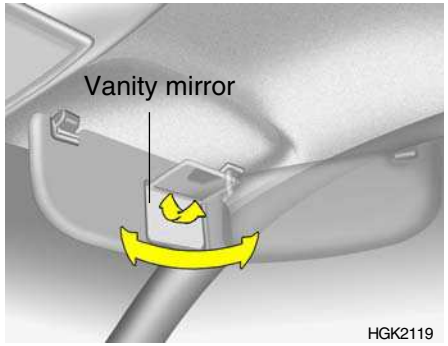

HGK2119

Your Hyundai is equipped with sun visors to give the driver and front passenger either frontal or sideward shade. To reduce glare or to shut out direct rays of the sun, turn the sun visor down. A ticket holder is provided on the back of the sun visor for the driver. Vanity mirrors are provided on the back of the sunvisor for the driver and the front passenger (Not all models).

NOTE:
The Supplemental Restraint System (SRS) label containing useful information can be found on the front of each sun visor.

WARNING:
Do not place the sunvisor in such a manner that it obscures visibility of the roadway, traffic or the objects.

B580C01JM-EAT

Sun Visor Extender (Not all models)

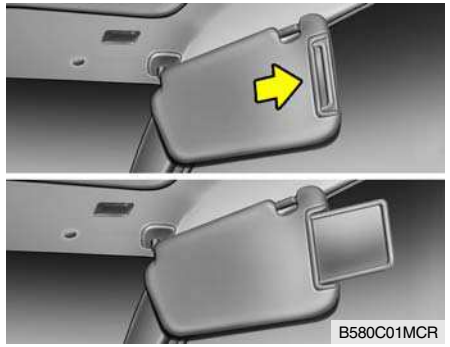

Your vehicle is equipped with sun visor extenders that may be used when the visor is in the side glass position.

STEERING WHEEL TILT LEVER

B600A01HP-EAT

(Not all models)

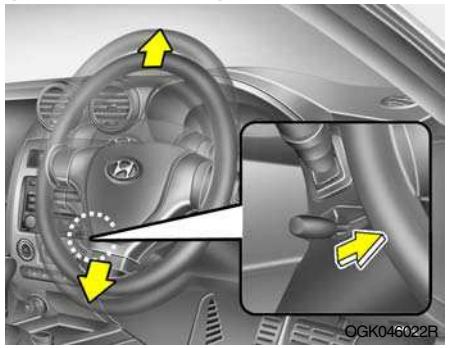

To adjust the steering wheel:

1. Pull the lever toward you and hold it to unlock.
2. Raise or lower the steering wheel to the desired position.
3. After adjustment, release the lever.

WARNING:
Do not attempt to adjust the steering wheel whilst driving as this may result in loss of control of the vehicle and serious injury or death.

HORN

SB530B1-F

Press the pad on the steering wheel to sound the horn.

LUGGAGE NET

B540D02HP-EAT

(Not all models)

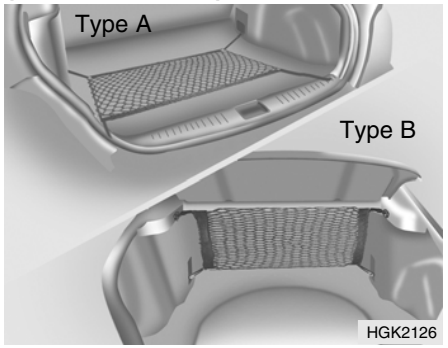

Some objects can be kept in the net of the luggage compartment.
Use the luggage net on the floor or at the back of the luggage compartment to prevent the objects from slipping.

CAUTION:
To prevent damage to the goods or the vehicle, care should be taken when carrying fragile or bulky objects in the luggage compartment.

WARNING:
Avoid eye injury. DO NOT overstretch the luggage net. ALWAYS keep your face and body out of its recoil path. DO NOT use when the strap has visible signs of wear or damage.

CRUISE CONTROL

B660A02S-EAT

(Not all models)

The cruise control system provides a constant speed hold function which may be determined at will. The system is most suited to use during dual carriageway/motorway driving where constant speed motoring at speeds in excess of 25 mph (40 km/h) may be undertaken.

WARNING:
Pay particular attention during the down-hill driving with cruise control system as the vehicle speed can be increased gradually.

B660B01GK-GAT

To Set the Cruise Speed

OGK016661

1. Push in the cruise control main switch on the end of the barrel. The "CRUISE" indicator light in the instrument cluster will be illuminated. This turns the system on.
2. Accelerate to the desired cruising speed above 25 mph (40 km/h).
3. Push the control switch downward to "SET (COAST)" and release it. The "SET" indicator light in the instrument cluster will illuminated.
4. Remove your foot from the accelerator pedal and the desired speed will automatically be maintained.
5. To increase speed, depress the accelerator pedal enough for the vehicle to exceed the preset speed. When you remove your foot from the accelerator pedal, the vehicle will return to the speed you have set.

WARNING:
To avoid accidental cruise control engagement, keep the cruise control main switch off when not using the cruise control.

B660C01GK-EAT

To Cancel the Cruise Speed

OGK016662

To disengage the cruise control system, Pull the control switch toward the steering wheel to "CANCEL" position. Additionally, the following actions will disengage the system:

- o Depress the brake pedal.
- o Depress the clutch pedal (Manual transaxle).
- o Shift the selector lever in "N" position (Automatic transaxle).
- o Decrease the vehicle speed lower than memorised speed by 9 mph (15 km/h).

- o Decrease the vehicle speed approximately to less than 25 mph (40 km/h).
- o Release the main switch.

B660D01E-AAT

To Resume the Preset Speed

OGK016663

The vehicle will automatically resume the speed set prior to cancellation when you push the control switch upward to "RESUME (ACCEL)" position and release it to return providing the vehicle speed is above 25 mph (40 km/h).

B660E01E-EAT

To Reset at a Faster Speed

1. Push the control switch upward to "RESUME (ACCEL)" position and hold it.
2. Accelerate to desired speed and release the control switch. Whilst the control switch is held, the vehicle will gradually gain speed.

B660F01GK-EAT

To Reset at a Slower Speed

OGK016661

1. Push the control switch downward to "SET (COAST)" and hold it. The "SET" indicator light in the instrument cluster will illuminate. The vehicle will decelerate.
2. When the desired speed is obtained, release the control switch. The "SET" indicator light in the instrument cluster will turn off. Whilst the control switch is pushed, the vehicle speed will gradually decrease.

WARNING:

- **Keep the main switch off when not using the cruise control.**
- **Use the cruise control system only when traveling on open dual carriageways/motorways in good weather.**
- **Do not use the cruise control when it may not be safe to keep the car at a constant speed, for instance, driving in heavy or varying traffic, or on slippery (rainy, icy or snow-covered) or winding roads or over 6% up-hill or down-hill roads.**
- **Pay particular attention to the driving conditions whenever using the cruise control system.**
- **During cruise-control driving with a manual transaxle vehicle, do not shift into neutral without depressing the clutch pedal, or the engine will be overrevved. If this happens, depress the clutch pedal or release the main switch.**

- **With the cruise control engaged, when the brake pedal is applied, it is normal to hear the cruise control system deactivate. This is an indication of normal system operation.**
- **During normal cruise control operation, when the "SET(COAST)" is activated or reactivated after applying the brakes, the cruise control will energize after approximately 3 seconds. This delay is normal.**

AUDIO REMOTE CONTROL SWITCH

B610A01GK-EAT

(Not all models)

OGK046086L

The steering wheel audio remote control switch is installed to promote safe driving.

POWER ON/OFF Switch

Press the POWER ON/OFF switch to select Radio, Tape, CD (compact disc) and CDC (compact disc changer).

Press the POWER ON/OFF switch once again to cancel Radio, Tape, CD (compact disc) and CDC (compact disc changer).

SEEK UP (▼) Switch

Press the SEEK UP (▼) switch 1 sec. or more.

1. RADIO mode

When the SEEK UP (▼) switch is pressed, the unit will automatically tune to the next higher frequency.

2. TAPE mode

Pressing the SEEK UP (▼) switch will play the beginning of the next music segment.

3. CD (compact disc)/CDC (compact disc changer) mode

Press the SEEK UP (▼) switch once to skip forward to the beginning of the next track.

VOL (▲/▼) Switch

- o Press the VOL (▲) button to increase volume.
- o Press the VOL (▼) button to decease volume.

B710A02GK-EAT

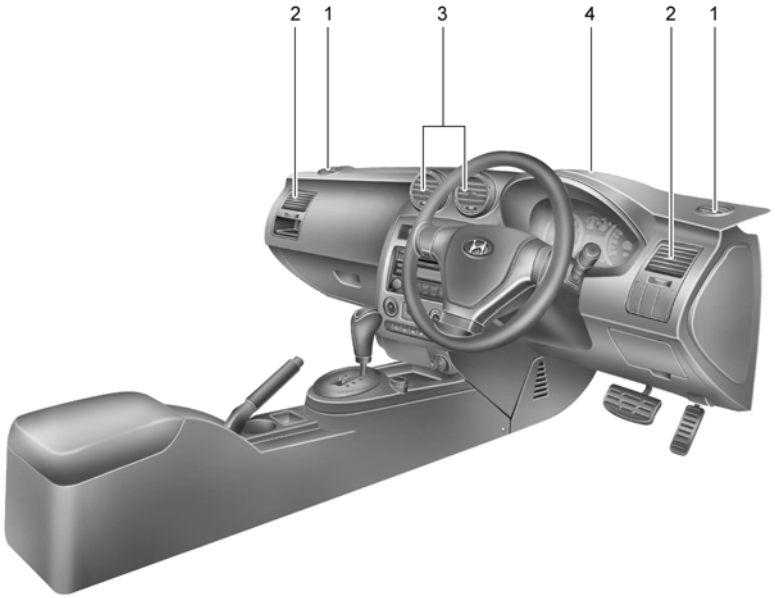

1. Side Defrost Nozzle
2. Side Ventilator
3. Centre Ventilator
4. Windscreen Defrost Ventilator

OGK016003R

B710B02O-EAT

Centre Ventilator

The centre ventilators are located in the middle of the dashboard. To change the direction of the air flow, move the knob in the centre of the vent up-and-down and side-to-side. The vents are opened when the vent knob is moved to " ≋ " position. The vents are closed when the vent knob is moved to " ⊠ ". Keep these vents clear of any obstructions.

B710C01HP-EAT

Side Ventilator

The side ventilators are located on each side of the dashboard. To change the direction of the air flow, move the knob in the centre of the vent up-and-down and side-to-side. The vents are opened when the vent knob is moved to " ≋ " position. The vents are closed when the vent knob is moved to " ⊠ ". Keep these vents clear of any obstructions.

B670A02GK-GAT

Rotary Type

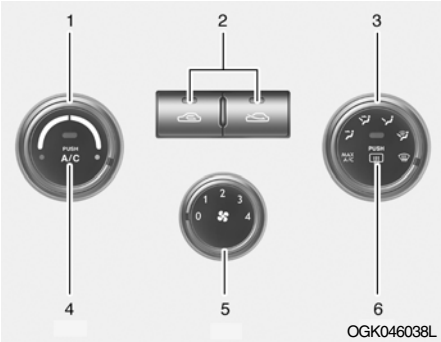

1. Temperature control switch
2. Air intake control switch
3. Air flow control switch
4. Air conditioning switch
5. Fan speed control switch
6. Rear window defroster switch

B670B01A-AAT

Fan Speed Control (Blower Control)

This is used to turn the blower fan on or off and to select the fan speed.
This blower fan speed, and therefore the volume of air delivered from the system, may be controlled manually by setting the blower control between the "1" and "4" positions.

B670E02A-AAT

Temperature Control

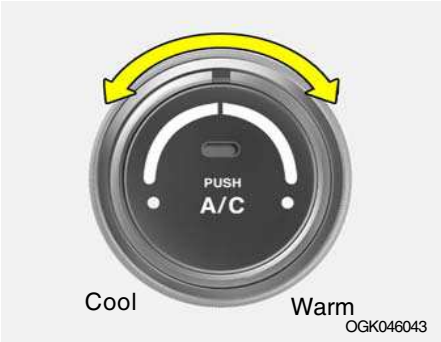

This control is used to adjust the degree of heating or cooling desired.

B670C02Y-EAT

Air Intake Control

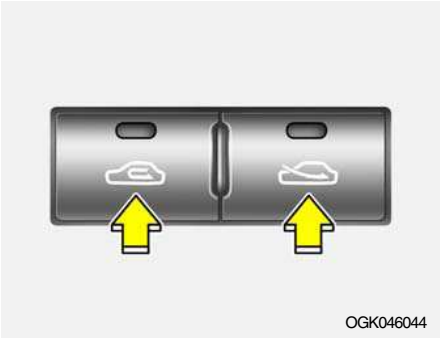

This is used to select fresh outside air or recirculation of inside air.

Fresh
Recirculation

With the " " mode selected, air enters the vehicle from outside and is heated or cooled according to the other functions selected.
With the " " mode selected, air from within the passenger compartment is drawn through the heating system and heated or cooled according to the other functions selected.

NOTE:
It should be noted that prolonged operation of the heating system in " " mode will give rise to fogging of the windscreen and side windows and the air within the passenger compartment will become stale. In addition prolonged use of the air conditioning with the " " mode selected may result in the air within the passenger compartment becoming excessively dry.

B670D01MC-EAT

Air Flow Control

This is used to direct the flow of air. Air can be directed to the floor, dashboard outlets, or windscreen. Five symbols are used to represent Face, Bi-Level, Floor, Floor-Defrost and Defrost air position.
The MAX A/C mode is used to cool the inside of the vehicle faster (Not all models).

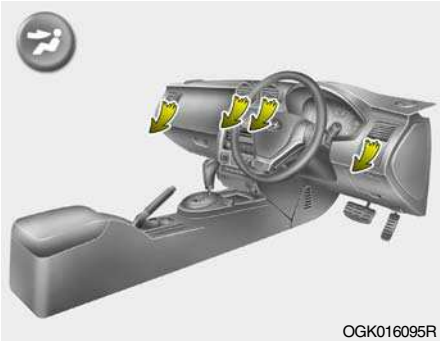

Face-Level

Selecting the "Face" mode will cause air to be discharged through the face level vents.

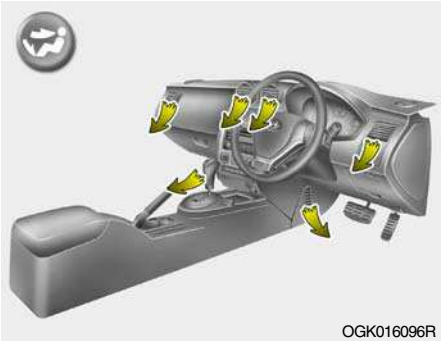

Bi-Level

Air is discharged through the face vents and the floor vents. This makes it possible to have cooler air from the dashboard vents and warmer air from the floor outlets at the same time.

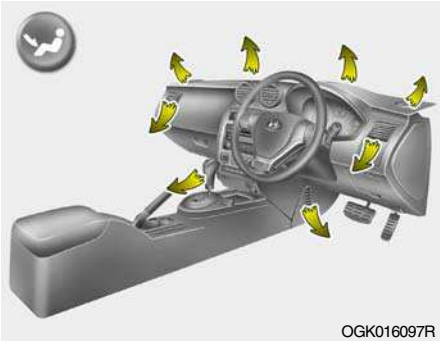

Floor-Level

Air is discharged through the floor vents, windscreen defroster nozzle, side defroster nozzle, side ventilator.

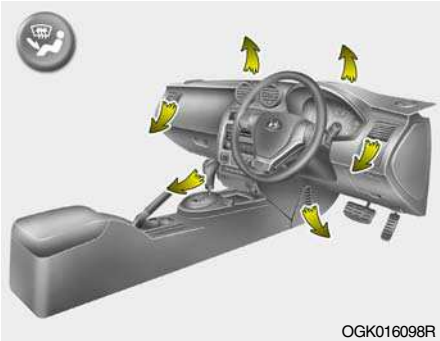

Floor-Defrost Level

Air is discharged through the windscreen defroster nozzle, the floor vents, side defroster nozzle, side ventilator.
If the "Floor-Defrost" mode is selected, the A/C will turn on automatically and "Fresh" mode will be activated.

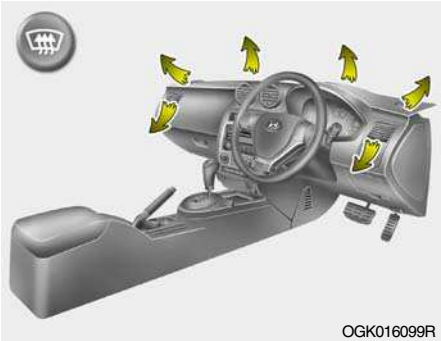

Defrost-Level

Air is discharged through the windscreen defroster nozzle, side defroster nozzle, side ventilator. If the "Defrost" mode is selected, the A/C will turn on automatically and "Fresh" mode will be activated.

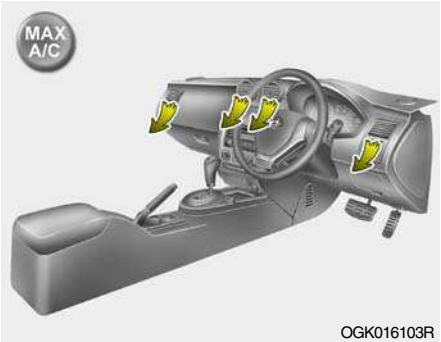

MAX A/C-Level (Not all models)

Air is discharged through the face level vents.
If the "MAX A/C" mode is selected, the A/C will turn on automatically and "Recirculation" mode will be activated.

NOTE:

- **The air intake control switch will change to "" mode when the ignition switch is turned "ON" with the MAX A/C mode selected.**
- **When you change to another mode from MAX A/C, the A/C and the air intake control switch are set as shown in the following chart.**

	A/C	Air Intake Control Switch
	ON	or *
	ON or OFF *	
	ON or OFF *	
	ON	
	ON	

* The A/C or the air intake control switch returns to its former setting.

HEATING CONTROLS

B690A02S-AAT

For normal heating operation, set the air intake control to the fresh air ( ) position and the air flow control to the floor ( ) position.

For faster heating, the air intake control switch should be set in the recirculate ( ) position.

If the windows fog up, set the air flow control to the defrost ( ) position. (The A/C will turn on automatically and "Fresh" mode will be activated.)

For maximum heat, move the temperature control to "Warm".

BI-LEVEL HEATING

B700A02A-AAT

Your Hyundai is equipped with bi-level heating controls. This makes it possible to have cooler air from the dashboard vents and warmer air from the floor outlets at the same time. To use this feature:

- Set the air intake control switch to the fresh air ( ) position.
- Set the air flow control at the bi-level ( ) position.
- Adjust the fan speed control to the desired speed.
- Set the temperature control between "Cool" and "Warm".

VENTILATION

B710A01A-AAT

To operate the ventilation system:

- o Set the air intake control switch at the fresh air ( ) position.
- o To direct all intake air to the dash-board vents, set the airflow control to the face ( ) position.
- o Adjust the fan speed control to the desired speed.
- o Set the temperature control between "Cool" and "Warm".

DEFROSTING/DEFOGGING

B720A02FC-EAT

Use the heating/ventilation system to defrost or defog the windscreen:

To remove the interior fog on the windscreen:

- o Set the air flow control to the defrost ( ) position. (The A/C will turn on automatically and "Fresh" mode will be activated.)
- o Set the temperature control at the desired position.
- o Set the fan speed control between "1" and "4" position.

To remove the frost or exterior fog on the windscreen:

- o Set the air flow control to the defrost ( ) position. (The A/C will turn on automatically and "Fresh" mode will be activated.)
- o Set the temperature control to the warm.
- o Set the fan speed control to position "3" or "4".

NOTE:
When the A/C is operated continuously on the floor-defrost level ( ) or defrost level ( ), it may cause fog to form on the exterior windscreen by the temperature differential. At this time set the air flow control to the face level position ( )and fan speed control to the low position.

B730A01L-EAT

Operation Tips

- To keep dust or unpleasant fumes from entering the car through the ventilation system, temporarily set the air intake control to "Recirculation". Be sure to return the control to "Fresh" when the irritation has passed to keep fresh air in the vehicle. This will help keep the driver alert and comfortable.
- Air for the heating/cooling system is drawn in through the grilles just ahead of the windscreen. Care should be taken that these are not blocked by leaves, snow, ice or other obstructions.
- To prevent interior fog on the windscreen, set the air intake control to the fresh air ( ) position, and fan speed to the desired position, turn on the air conditioning system, and adjust temperature control to desired temperature.

B740A01S-EAT

(Not all models)
Air Conditioning Switch

The air conditioning is turned on or off by pushing the A/C button on the heating/air conditioning control panel.

B740B02A-AAT

Air Conditioning Operation Cooling

To use the air conditioning to cool the interior:

- o Turn on the fan control switch.
- o Turn on the air conditioning switch by pushing in on the switch. The air conditioning indicator light should come on at the same time.
- o Set the air intake control switch to the fresh air ( ) position.
- o Set the temperature control to "Cool". ("Cool" provides maximum cooling. The temperature may be moderated by moving the control toward "Warm".)
- o Adjust the fan control to the desired speed. For greater cooling, turn the fan control to one of the higher speeds or temporarily select the recirculate ( ) position on the air intake control switch.

B740C01A-AAT

De-Humidified Heating

For dehumidified heating:

- o Turn on the fan control switch.
- o Turn on the air conditioning switch. The air conditioning indicator light should come on at the same time.
- o Set the air intake control switch to the fresh air ( ) position.
- o Set the air flow control to the face ( ) position.
- o Adjust the fan control to the desired speed.
- o For more rapid action, set the fan at one of the higher speeds.
- o Adjust the temperature control to provide the desired amount of warmth.

B740D01A-AAT

Operation Tips

- o If the interior of the car is hot when you first get in, open the windows for a few minutes to expel the hot air.
- o When you are using the air conditioning system, keep all windows closed to keep hot air out.
- o When moving slowly, as in heavy traffic, shift to a lower gear. This increases engine speed, which in turn increases the speed of the air conditioning compressor.
- o On steep grades, turn the air conditioning off to avoid the possibility of the engine over-heating.
- o During winter months or in periods when the air conditioning is not used regularly, run the air conditioning once every month for a few minutes. This will help circulate the lubricants and keep your system in peak operating condition.

AUTOMATIC HEATING AND COOLING CONTROL SYSTEM

B970A01Y-EAT

(Not all models)

Your Hyundai is equipped with an automatic heating and cooling control system controlled by simply setting the desired temperature.

B970B03GK-EAT

Heating and Cooling Controls

1. Temperature Control Button
2. Display Window
3. Blower Fan Control
4. AUTO (Automatic Control) Switch
5. Air Flow Control Switch
6. Air Conditioning Switch
7. Defroster Switch
8. Rear Window Defroster Switch
9. Air Intake Control Switch
10. OFF Switch
11. Air Quality System Switch (Not all models)

TYPE A (Without Air Quality System)

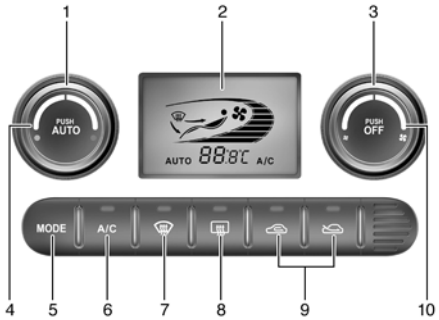

OGK046057C

TYPE B (With Air Quality System)

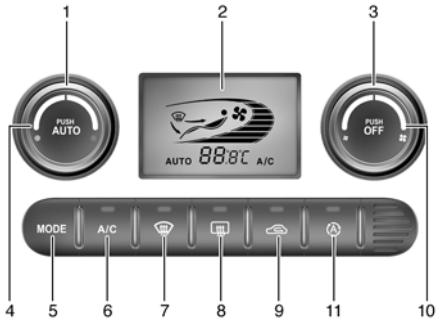

OGK046057L

B970C01NF-EAT

Automatic Operation

OGK046058

The FATC (Full Automatic Temperature Control) system automatically controls heating and cooling by doing as follows:

1. Push the "AUTO" switch. The indicator light will illuminate confirming that the Face, Floor and/or Bi-Level modes as well as the blower speed and air conditioner will be controlled automatically.

OGK046061

2. Turn the "TEMP" knob to set the desired temperature.
   The temperature will increase to the maximum 32°C (90°F) by turning the knob clockwise.
   The temperature will decrease to the minimum 17°C (62°F) by turning the knob counterclockwise.

NOTE:
If the battery has been discharged or disconnected, the temperature mode will reset to Centigrade degrees. This is a normal condition and you can change the temperature mode from Centigrade to Fahrenheit as follows;

Press the "OFF" and "AUTO" switch simultaneously for 3 seconds. The display shows that the unit of temperature is adjusted to Centigrade or Fahrenheit (°C → °F or °F → °C).

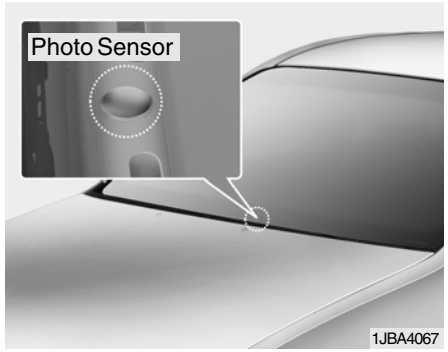

1JBA4067

NOTE:
Never place anything over the sensor which is located on the instrument panel to ensure better control of the heating and cooling system.

B995A01GK-GAT

Outside Temperature Switch

Press the button, the display show that the unit of outside temperature is adjusted to centigrade or fahrenheit (°C → °F or °F → °C).

B980A01Y-AAT

MANUAL OPERATION

The heating and cooling system can be controlled manually as well by pushing buttons other than the "AUTO" button. In this state, the system sequentially works according to the order of buttons selected.
The function of the buttons which are not selected will be controlled automatically.
Press the "AUTO" button in order to convert to automatic control of the system.

B980B01NF-AAT

Fan Speed Control

The fan speed can be set to the desired speed by turning the fan speed control knob. The higher the fan speed is, the more air is delivered. Pressing the "OFF" switch turns off the fan.

B670C02GK-EAT

Air Intake Control Switch (Without A.Q.S)

This is used to select fresh outside air or recirculation inside air.
To change the air intake control mode, (Fresh mode, Recirculation mode) push the control button.

OGK046063L

FRESH MODE ( ) : The indicator light on the button is illuminated when the air intake control is in fresh mode.

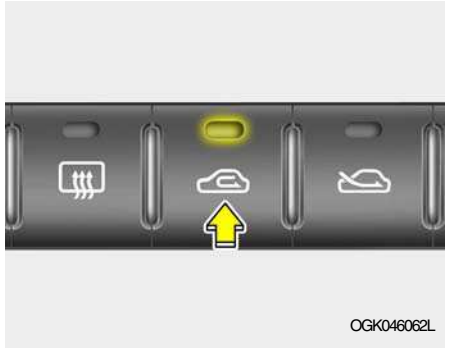
OGK046062L

RECIRCULATION MODE ( ) : The indicator light on the button is illuminated when the air intake control is in recirculation mode.

With the "Fresh" mode selected, air enters the vehicle from the outside and is heated or cooled according to the function selected.

With the "Recirculation" mode selected, air from within the passenger compartment will be drawn through the heating system and heated or cooled according to the function selected.

NOTE:
It should be noted that prolonged operation of the heating system in "recirculation" mode will give rise to fogging of the windscreen and side windows and the air within the passenger compartment will become stale. In addition, prolonged use of the air conditioning with the "Recirculation" mode selected may result in the air within the passenger compartment becoming excessively dry.

B980C02GK-EAT

Air Intake Control Switch (With A.Q.S) (Not all models)

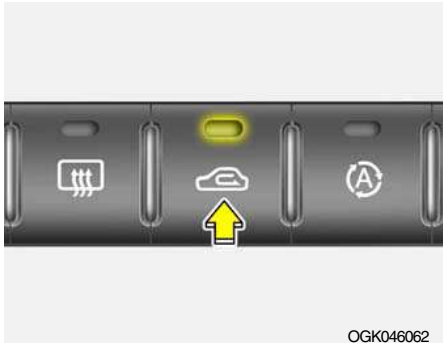
OGK046062

This is used to select fresh outside air or recirculate inside air automatically.

▭ : OFF
▬ : ON

Fresh mode :

Air enters the vehicle from the outside and is heated or cooled according to the function selected.

Recirculation mode :

Air from within the passenger compartment will be drawn through the heating system and heated or cooled according to the function selected.

OGK046063

Exhaust gas cutoff mode :

Air enters the vehicle from the outside. But if exhaust gas enters the vehicle from the outside, the exhaust gas cutoff mode ( ) is automatically converted to the ( ) mode, to prevent exhaust gas from entering the vehicle.

NOTE:
It should be noted that prolonged operation of the heating system in recirculation mode ( ) will give rise to misting of the windscreen and side windows and the air within the passenger compartment will become stale. In addition, prolonged use of the air conditioning with the recirculation mode ( ) selected may result in the air within the passenger compartment becoming excessively dry.

CAUTION:
If the windows fog up with the Recirculation or A.Q.S mode selected, set the air intake control to the Fresh air position or A.Q.S control to "OFF".

B740A01S-AAT

Air Conditioning Switch

The air conditioning is turned on or off by pushing the A/C button on the heating/air conditioning control panel.

B980D01Y-AAT

Heating and Cooling System Off

Press the "OFF" button to stop the operation of the heating and cooling system.

B980E01NF-EAT

Air Flow Control

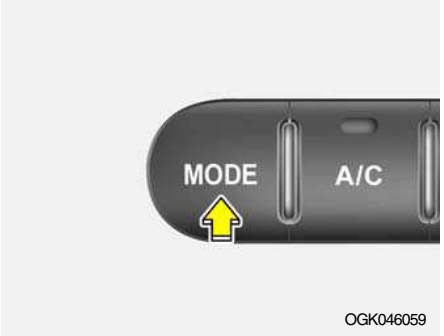

This is used to direct the flow of air. Air can be directed to the floor, dashboard outlets, or windscreen. Four symbols are used to represent Face, Bi-Level, Floor and Floor-Defrost air position.

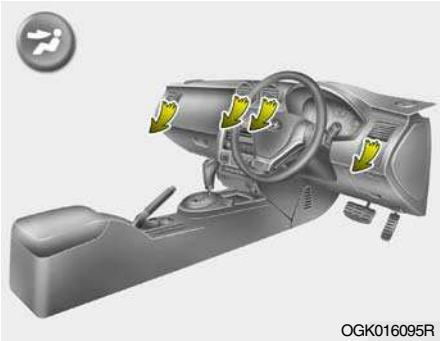

Face-Level

When selecting the "Face" mode, the indicator light will come on, causing air to be discharged through the face level vents.

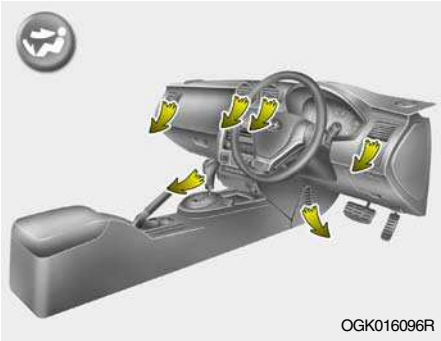

Bi-Level

When selecting the "Bi-Level" mode, the indicator light will come on and the air will be discharged through the face vents and the floor vents. This makes it possible to have cooler air from the dashboard vents and warmer air from the floor outlets at the same time.

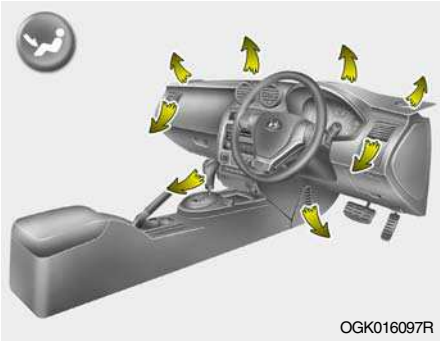

Floor-Level

When selecting the "Floor-Level" mode, the indicator light will come on and the air will be discharged through the floor vents, windscreen defroster nozzle, side defroster nozzle, side ventilator.

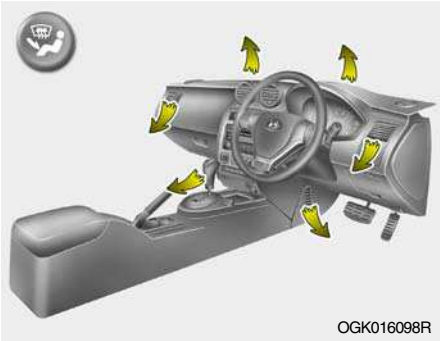

Floor-Defrost Level

When selecting the "Floor-Defrost" mode, the indicator light will come on and the air will be discharged through the windscreen defrost nozzle, the floor vents, side defroster nozzle, side ventilator.

B980F01GK-EAT

Defrost Switch

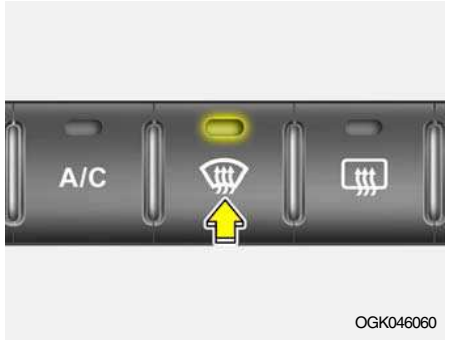

When the "Defrost" button is pressed, the " " mode will be automatically selected and the air will be discharged through the windscreen defrost nozzle, side defroster nozzle and side ventilator. To assist in defrosting, the air conditioning will operate if ambient temperature is higher than 2°C (35.6°F) and automatically turns off if the ambient temperature drops below 0.5°C (32.9°F).

B980G01NF-EAT

Auto de-humidified control (Not all models)

There is a humidity sensor in the middle of the crash pad. If it becomes very humid inside the car, the air conditioning is turned on automatically to control the humidity.

CLIMATE CONTROL AIR FILTER (IN FRONT OF BLOWER UNIT)

B760A06GK-EAT

(Not all models)

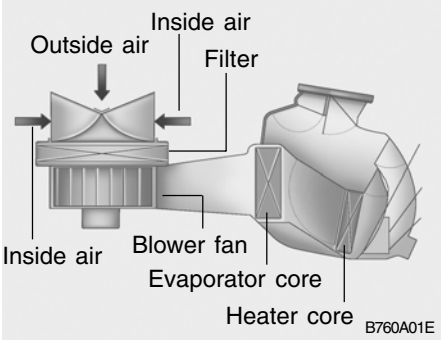

The climate control air filter is located in front of the blower unit behind the glove box.
It operates to decrease the amount of pollutants entering the car.
To replace the climate control air filter, refer to the page 6-18.

CAUTION:

- **Replace the filter every 10,000 miles (15,000 km) or once a year. If the car is being driven in severe conditions such as dusty, rough roads, more frequent climate control air filter inspections and changes are required.**
- **When the air flow rate is decreased, it must be checked at Hyundai authorised repairer.**

ANTENNA

B870A01A-GAT

Fixed Rod Antenna

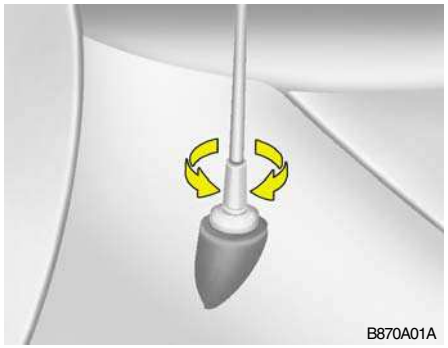

Your car uses a fixed rod antenna to receive both AM and FM broadcast signals.
This antenna is a removable type. To remove the antenna, turn the antenna counterclockwise. To install the antenna, turn the antenna clockwise.

CAUTION:

Be sure to remove the antenna before washing the car in an automatic car wash or the antenna may be damaged.

B870D01Y-EAT

Glass Antenna (Not all models)

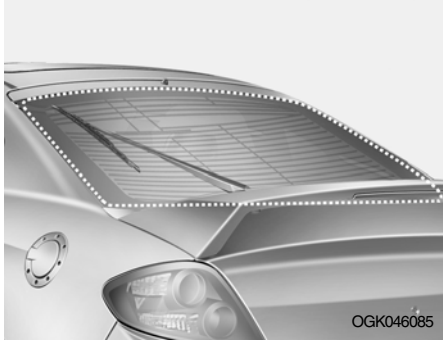

When the radio power switch is turned on whilst the ignition key is in either the "ON" or "ACC" position, your car will receive both AM and FM broadcast signals through the antenna in the rear window glass.

CAUTION:

- **Do not clean the inner side of the rear window glass with an abrasive type of glass cleaner or use a scraper to remove foreign deposits from the inner surface of the glass as this may cause damage to the antenna elements.**
- **Avoid adding metallic coating (Such as Ni, Cd, and so on). These can disturb receiving AM and FM broadcast signals.**

B750A02A-AAT

How Car Audio Works

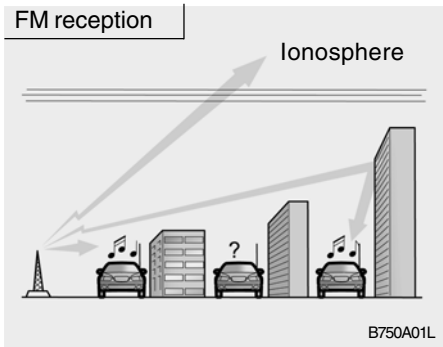

AM and FM radio signals are broadcast from transmitter towers located around your city. They are intercepted by the radio antenna on your car. This signal is then received by the radio and sent to your car speakers.

When a strong radio signal has reached your vehicle, the precise engineering of your audio system ensures the best possible quality reproduction. However, in some cases the signal coming to your vehicle may not be strong and clear. This can be due to factors such as the distance from the radio station, closeness of other strong radio stations or the presence of buildings, bridges or other large obstructions in the area.

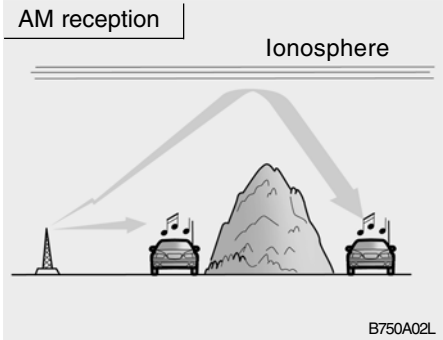

AM broadcasts can be received at greater distances than FM broadcasts. This is because AM radio waves are transmitted at low frequencies. These long, low frequency radio waves can follow the curvature of the earth rather than travelling straight out into the atmosphere. In addition, they curve around obstructions so that they can provide better signal coverage.

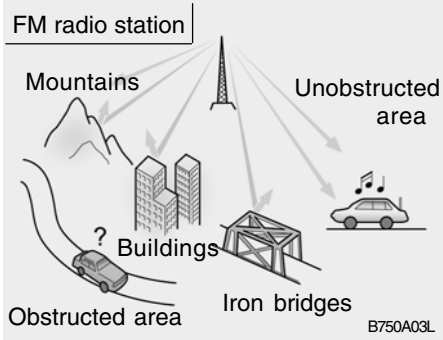

FM broadcasts are transmitted at high frequencies and do not bend to follow the earth's surface. Because of this, FM broadcasts generally begin to fade at short distances from the station. Also, FM signals are easily affected by buildings, mountains, or other obstructions. These can result in certain listening conditions which might lead you to believe a problem exists with your radio. The following conditions are normal and do not indicate radio trouble:

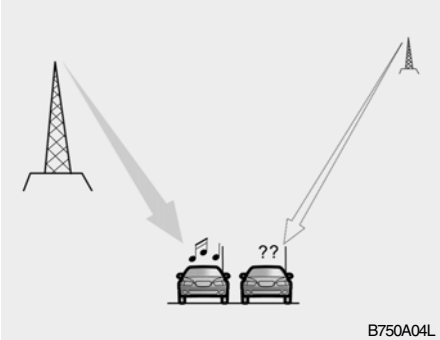

- Fading - As your car moves away from the radio station, the signal will weaken and sound will begin to fade. When this occurs, we suggest that you select another stronger station.
- Flutter/Static - Weak FM signals or large obstructions between the transmitter and your radio can disturb the signal causing static or fluttering noises to occur. Reducing the treble level may lessen this effect until the disturbance clears.

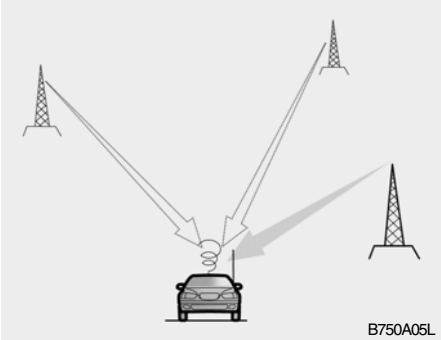

- Station Swapping - As a FM signal weakens, another more powerful signal near the same frequency may begin to play. This is because your radio is designed to lock onto the clearest signal. If this occurs, select another station with a stronger signal.
- Multi-Path Cancellation - Radio signals being received from several directions can cause distortion or fluttering. This can be caused by a direct and reflected signal from the same station, or by signals from two stations with close frequencies. If this occurs, select another station until the condition has passed.

B750B02Y-EAT

Using a mobile phone or a two-way radio

When a mobile phone is used inside the vehicle, noise may be produced from the audio equipment. This does not mean that something is wrong with the audio equipment. In such a case, use the mobile phone at a place as far as possible from the audio equipment.

CAUTION:
When using a communication system such a mobile phone or a radio set inside the vehicle, a separate external antenna must be fitted. When a mobile phone or a radio set is used with an internal antenna alone, it may interfere with the vehicle's electrical system and adversely affect safe operation of the vehicle.

WARNING:
Don't use a mobile phone whilst you are driving.

CARE OF DISCS

JB580B1-A

Proper Handling

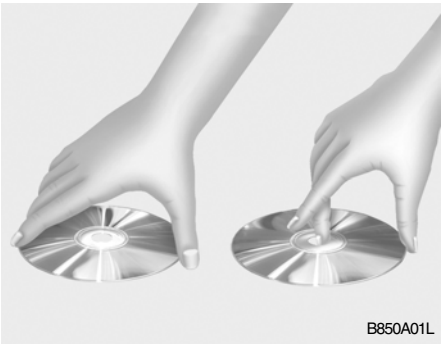

Handle your disc as shown. Do not drop the disc. Hold the disc so you will not leave fingerprints on the surface. If the surface is scratched, it may cause the pickup to skip signal tracks. Do not affix tape, paper, or gummed labels on the disc. Do not write on the disc.

Damaged Disc

Do not attempt to play damaged, warped or cracked discs. It could severely damage the playback mechanism.

Storage

When not in use, place your discs in their individual case and store them in a cool place away from the sun, heat, and dust.
Do not grip or pull out the disc with your hand while the disc is being pulled into the unit by the Self Loading mechanism.
Do not grip or pull out the disc with your hand while the disc is being pulled into the unit by the self loading mechanism.
Do not pull the unit from the dash immediately after a disc is inserted or the eject switch has been pressed. If the unit is pulled out before an operation is completed, the disc will be unstable in the unit and may be damaged.
Do not attempt to insert a disc into the unit when the unit is out of the dash or the power is off.

Keep Your Discs Clean

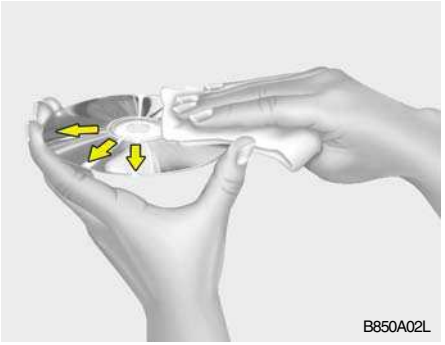

Fingerprints, dust, or soil on the surface could cause the pickup to skip signal tracks. Wipe the surface clean with a clean soft cloth. If the surface is heavily soiled, dampen a clean soft cloth in a solution of mild neutral detergent to wipe it clean.

CARE OF CASSETTE TAPES

SR040B1-F

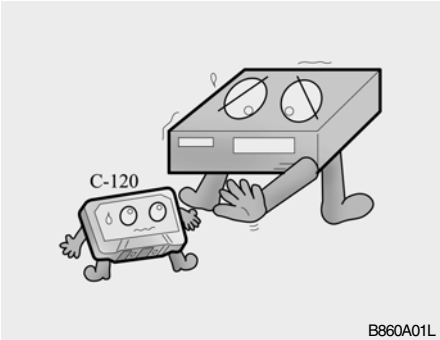

Proper care of your cassette tapes will extend the tape life and increase your listening enjoyment. Always protect your tapes and cassette cases from direct sunlight, severe cold and dusty conditions. When not in use, cassettes should always be stored in the protective cassette case in which they were originally supplied. When the vehicle is very hot or cold, allow the interior temperature to become more moderate before listening to your cassettes.

- o Never leave a cassette inserted in the player when not being played. This could damage the tape player unit and the cassette tape.
- o We strongly recommend against the use of tapes longer than C-60 (60 minutes total). Tapes such as C-120 or C-180 are very thin and do not perform as well in the automotive environment.

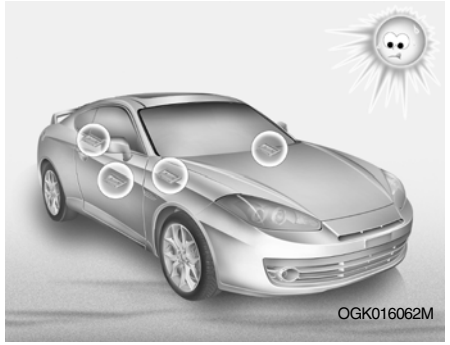

- o Be sure that the cassette label is not loose or peeling off or tape ejection may be difficult.
- o Never touch or soil the actual audio tape surfaces.
- o Keep all magnetized objects, such as electric motors, speakers or transformers away from your cassette tapes and tape player unit.
- o Store cassettes in a cool, dry place with the open side facing down to prevent dust from setting in the cassette body.
- o Avoid repeated fast reverse usage to replay one given tune or tape section. This can cause poor tape winding to occur, and eventually cause excessive internal drag and poor audio quality in the cassette. If this occurs, it can sometimes be corrected by fast winding the tape from end to end several times. If this does not correct the problem, do not continue to use the tape in your vehicle.

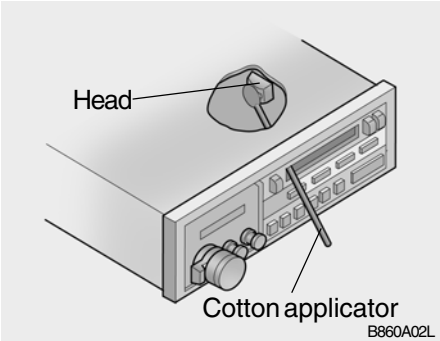

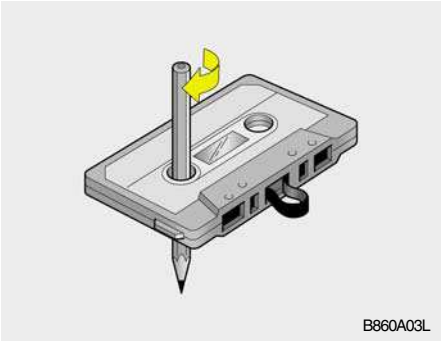

- The playback head, capstan and pinch rollers will develop a coating of tape residue that can result in deterioration of sound quality, such as a wavering sound. They should be cleaned monthly using a commercially available head cleaning tape or special solution available from audio specialty shops. Follow the supplier's directions carefully and never oil any part of the tape player unit.
- Always be sure that the tape is tightly wound on its reel before inserting in the player. Rotate a pencil in the drive sprockets to wind up any slack.

NOTE:

Look at a tape before you insert it. If the tape is loose, tighten it by turning one of the hubs with a pencil or your finger.

If the label is peeling off, do not put it in the player. It may cause the tape jam in the drive mechanism when you try to eject it.

Do not leave tape sitting where they are exposed to hot warm or, high humidity, such as on top of the dashboard or in the player.

If a tape is exposed to excessively hot or cold, let it reach a moderate temperature before putting it in the player.

DRIVING YOUR HYUNDAI

Engine Exhaust Can Be Dangerous! 2-2
Before Starting the Engine 2-3
Key Positions 2-4
Starting 2-5
Fuel Economy 2-6
Manual Transaxle 2-7
Automatic Transaxle 2-9
Anti-Lock Brake System (ABS) 2-14
Electronic Stability Program (ESP) 2-15
Effective Braking 2-16
Driving for Economy 2-17
Smooth Cornering 2-18
Winter Motoring 2-19
Trailer or Vehicle Towing 2-20

2

C010A02O-EAT

WARNING: ENGINE EXHAUST CAN BE DANGEROUS!

Engine exhaust gases are potentially lethal. If at any time engine exhaust gas is detected within the passenger compartment, move the vehicle to an open area and open all windows.

o Never inhale exhaust gas.
Exhaust gases contain Carbon Monoxide which is colourless and odourless. Carbon Monoxide is poisonous and can cause unconsciousness and death by asphyxiation.

o Exhaust System Maintenance.
Ensure that the exhaust system is maintained in good condition and is free from excessive corrosion and damage which may result in leakage. If the vehicle is driven over an object which strikes the exhaust system, ensure that the exhaust system is inspected at the first available opportunity to ensure that no leakage exists.

o Confined Areas.
Do not run the engine in confined spaces, allowing the engine to idle in a garage, even when the doors are open is dangerous practice. Only start the engine immediately prior to moving the vehicle out of the garage.

o Prolonged Idling.
If it is necessary to allow the vehicle to idle for prolonged periods, ensure that the heating system air intake control is set to the "Fresh" position, the blower is set to high speed operation and that the vehicle is standing in an open area.

To ensure correct operation of the heater system, the air intake grilles at the base of the windscreen must not be obstructed by snow leaves etc..

BEFORE STARTING THE ENGINE

SC030A2-E

Before you start the engine, you should always:

1. Look around the vehicle to be sure there are no flat tyres, puddles of oil or water or other indications of possible trouble.
2. After entering the car, check to be sure the parking brake is engaged.
3. Check that all windows, and lights are clean.
4. Check that the interior and exterior mirrors are clean and in position.
5. Check your seat, seatback and head restraint to be sure they are in their proper positions.
6. Close all the doors.
7. Fasten your seat belt and be sure that all other occupants have fastened theirs.
8. Turn off all lights and accessories that are not needed.
9. When you turn the ignition switch to "ON" check that all appropriate warning lights are operating and that you have sufficient fuel.
10. Check the operation of warning lights and all bulbs when key is in the "ON" position.

WARNING:
Always wear appropriate shoes when operating your vehicle.
Unsuitable shoes (high heels, ski boots, etc.) may interfere with your ability to use the brake and accelerator pedal, and the clutch (Not all models).

TO START THE ENGINE

C030A01A-EAT

COMBINATION IGNITION SWITCH AND STEERING LOCK

- o If your Hyundai is equipped with a manual transaxle, place the gear-shift lever in neutral and depress the clutch pedal fully.
- o If your Hyundai has an automatic transaxle, place the selector lever in "P" (park).
- o To start the engine, insert the ignition key and turn it to the "START" position. Release it as soon as the engine starts. Do not hold the key in the "START" position for more than 15 seconds.

NOTE:
For safety, the engine will not start if the shift lever is not in "P" or "N" position (Automatic Transaxle).

KEY POSITIONS

SC050A2-E

WARNING:
The engine must never be turned off and the key removed from the ignition key cylinder whilst the vehicle is in motion since the steering lock will operate and control of the vehicle will be lost.

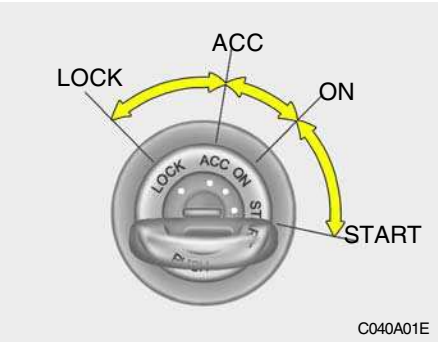

C040A01E

o "START"

The engine is started in this position. It will crank until you release the key.

NOTE:
Do not hold the key in the "START" position for more than 15 seconds.

o "ON"

When the key is at the "ON" position, the ignition and all accessories are available for use. If the engine is not running, the key should not be left at this position since the battery will become discharged and damage to the ignition system may also result. For information regarding engine starting, refer to "STARTING THE ENGINE".

o "ACC"

When the ignition key is at the "ACC" position, the radio and other accessories may be used.

o "LOCK"

The ignition key may only be inserted or removed at this position.

YC030A2-E

STEERING WHEEL LOCK

When the ignition key is removed, the steering wheel lock will be activated. The lock only engages at one position of the steering wheel and therefore it will be necessary to turn the wheel until this position is reached. It is not, however, necessary for the lock to be engaged before leaving the vehicle since in the event of attempted unauthorised removal, the lock will engage when attempts are made to steer the vehicle.

NOTE:
If difficulty is experienced in turning the ignition key to the START position, turn the steering wheel right and left to release the tension and then turn the key.

CAUTION:
Never remove the key from the ignition lock whilst the vehicle is in motion since the steering mechanism lock will be activated.

SC090D1-F

To Remove the Ignition Key

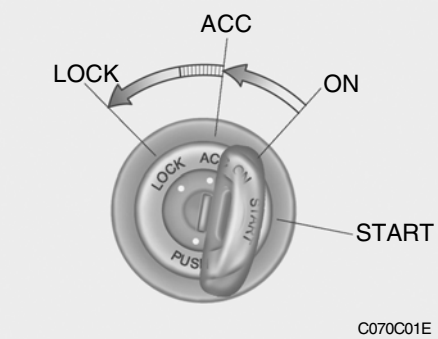

1. Turn the ignition key to the "ACC" position.
2. Simultaneously push and turn the ignition key counterclockwise from the "ACC" position to the "LOCK" position.
3. The key can be removed in the "LOCK" position.

SC060A1-E

Starting The Engine

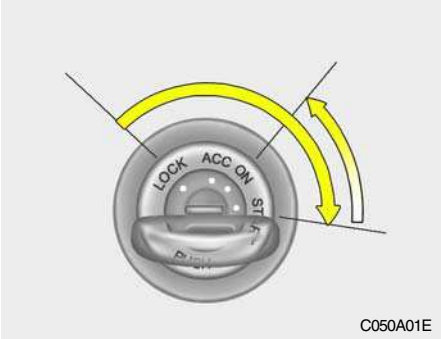

1. Ensure that the gearshift lever is in neutral and that the clutch pedal is held depressed (manual transaxle) or the selector lever is at the "P" position (automatic transaxle vehicle).
2. Turn the ignition key to and hold at the "START" position until the engine starts. When the engine has started, release the key.

NOTE:
Do not operate the starter for more than 15 seconds continuously or continue to operate the starter after the engine has started to avoid damaging the starter motor. If the engine makes a false start, allow it and the starter motor to come to rest before attempting to start the engine again. Never attempt to start the engine with the transaxle in gear. Do not depress the accelerator pedal whilst starting the engine. Allow the engine to idle for 20 seconds or so before driving the vehicle.

CAUTION:
Do not leave the vehicle unattended whilst idling. Never allow the vehicle to idle or warm up in a confined space (ie garage) longer than is necessary to move the vehicle into an open area.

C050B01A-EAT

Normal Conditions

The Starting Procedure:

1. Insert key, and fasten the seat belt.
2. Depress the clutch pedal fully and place the gearshift lever (manual transaxle) in neutral or the selector lever (automatic transaxle) in "P" (park) position.
3. After turning the ignition key to the "ON" position, make certain all warning lights and gauges are functioning properly before starting the engine.
4. Turn the ignition key to the "START" position and release it when the engine starts.

WARNING:
Be sure that the clutch is fully depressed when starting a manual transaxle vehicle. This will prevent sudden movement should the vehicle be started in gear without the clutch depressed.
Otherwise there is the potential to cause damage to the vehicle or injury to a person inside or outside of the vehicle as a result of this sudden vehicle movement.

FUEL ECONOMY

SC060B1-E

The following suggestions are made to assist in achieving the greatest degree of fuel economy.

- o Maintaining a constant check on fuel consumption will enable the most economical use pattern and driving style to be adopted.
- o Avoid using the vehicle for very short journeys if possible, particularly when a cold start is involved.
- o Ensure that tyre pressures are maintained at the correct level.
- o Use only the recommended grade of fuel.
- o Avoid carrying unnecessary weight, and if a roof rack is in use, remove it as soon as possible after use.
- o Anticipate the road and conditions ahead to enable adjustments in speed to be made smoothly. Avoid heavy acceleration and sharp braking.
- o Avoid cruising at unnecessary high speeds.
- o Always ensure that the periodic maintenance services are performed by a Hyundai authorised repairer at the time and/or mileage intervals specified.
- o Use the air conditioning only when necessary.

OPERATING THE MANUAL TRANSAXLE

C070A01GK-EAT

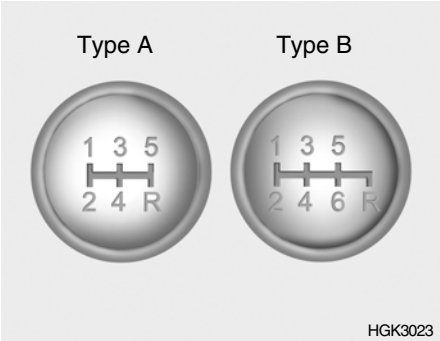

The five speed fully synchronised transaxle is controlled by a floor mounted gearshift lever upon which the shift pattern is indicated. It is important that when changing gear, the clutch pedal is fully depressed to avoid transaxle damage.

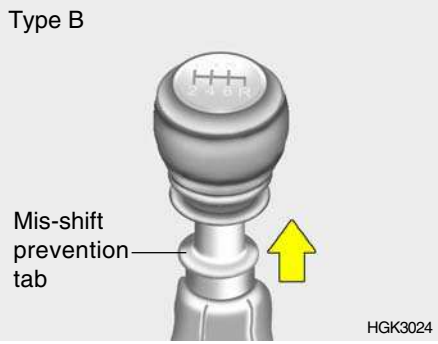

When shifting into reverse gear, pull the mis-shift prevention tab and shift into reverse gear position. (Type B : 6 speed type)

CAUTION:

- **Do not attempt to engage reverse gear when the car is in motion.**
- **To avoid damaging the selector mechanism, do not use the gear shift lever as a hand rest. Release the lever immediately the shift is completed.**

- **To avoid premature clutch wear, do not use the clutch pedal as a foot rest, and do not hold the vehicle on a gradient using the clutch.**
- **Ensure that the engine is not over-revved by upshifting before the tachometer needle enters the red zone.**
- **Do not coast with the gearshift lever at the neutral position.**
- **When descending long gradients, make use of the engine braking to assist the footbrake to avoid brake fade or over-heating.**
- **When slippery conditions are encountered, increased caution should be exercised when gear changing, braking or accelerating. Abrupt changes in speed may cause a loss of traction or control of the vehicle.**
- **During cold weather, shifting may be difficult until the transaxle lubricant has warmed up. This is normal and not harmful to the transaxle.**

- If you've come to a complete stop and it's hard to shift into 1st or R(Reverse), put the gearshift lever in N(Neutral) position and let up on the clutch. Press the clutch pedal back down, and then shift into 1st or R(Reverse) gear position.
- Do not use the gearshift lever as a handrest during driving, as this can result in premature wear of the transaxle shift forks.
- Do not downshift more than 2 gears at once or when the engine is running at high speed (5,000 RPM or higher). Such downshifting may damage the engine.

WARNING:

- Avoid high cornering speeds.
- Do not make quick steering wheel movements, such as sharp lane changes or fast, sharp turns.
- Always wear your seat belts. In a collision crash, an unbelted person is significantly more likely to die than a person wearing a seat belt.
- The risk of rollover is greatly increased if you lose control of your vehicle at motorway speeds.
- Loss of control often occurs if two or more wheels drop off the roadway and the driver oversteers to reenter the roadway.
- In the event your vehicle leaves the roadway, do not steer sharply. Instead, slow down before pulling back into the travel lanes.
- Never exceed posted speed limits.

C070B01A-EAT

Using the Clutch

The clutch should be pressed all the way to the floor before shifting, then released slowly. The clutch pedal should always be used after fully returning to the original position. Do not rest your foot on the clutch pedal whilst driving. This can cause unnecessary wear.
Do not partially engage the clutch to hold the car on an incline. This causes unnecessary wear.
Use the parking brake to hold the car on an incline. Do not operate the clutch pedal rapidly and repeatedly.

C070E01GK-EAT

RECOMMENDED SHIFT POINTS

The shift points as shown below are recommended for optimum fuel economy and performance.

Type A (5 speed)

Shift from-to	Recommended
1-2	15 mph (20 km/h)
2-3	25 mph (40 km/h)
3-4	35 mph (55 km/h)
4-5	45 mph (75 km/h)

Type B (6 speed)

Shift from-to	Recommended
1-2	10 mph (15 km/h)
2-3	20 mph (35 km/h)
3-4	30 mph (50 km/h)
4-5	45 mph (70 km/h)
5-6	60 mph (95 km/h)

NOTE:
The shift points are recommended and should only be used in the appropriate driving conditions.

OPERATING THE AUTOMATIC TRANSAXLE

C090A03Y-EAT

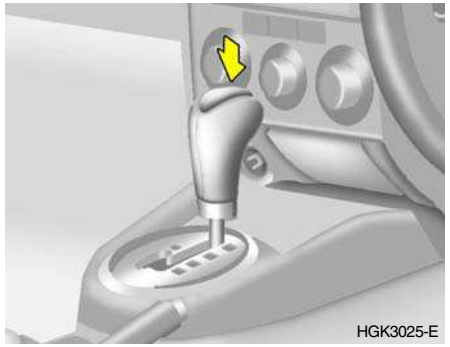
HGK3025-E

The highly efficient Hyundai automatic transaxle has four forward speeds and one reverse speed. The individual speeds are selected automatically, depending on the position of the selector lever. The selector lever has 2 gates; the main gate and the manual gate.

NOTE:
For information on manual gate operation, refer to "Sports Mode".

In the main gate, the selector lever has 4 positions, and is equipped with a button to avoid inadvertent wrong selection.

The first few shifts on a new vehicle, or if the battery has been disconnected, may be somewhat abrupt. This is a normal condition, and the shifting sequence will adjust after shifts are cycled a few times by the T.C.M (Transaxle Control Module).

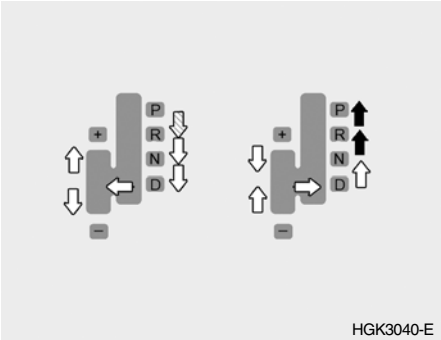

HGK3040-E

CAUTION:
Never shift into "R" or "P" position whilst the vehicle is moving.

NOTE:

Depress the brake pedal and push the button when shifting.
Push the button when shifting.
The selector lever can be shifted freely.

The indicator lights in the instrument cluster indicate the selector lever position when the ignition is switched "ON". During "D" or sports mode operation, the gear currently in use displays in the numeral indicator.

YC090A1-E

SELECTOR POSITIONS

o P (Park):

With the selector lever in this position, no drive is transmitted from the engine and the transaxle output and therefore the front wheels locked. The engine may be started with the selector lever in this position.

CAUTION:
The selector lever must NEVER be shifted to the "P" position whilst the vehicle is in motion, otherwise serious transaxle damage will result.

DC110C1-E

o R (Reverse):

With the selector lever in this position, reverse gear will be engaged. The engine may not be started with the selector lever in this position.

CAUTION:
The selector lever must NEVER be shifted to the "R" position whilst the vehicle is in motion.

DC110D1-E

o N (Neutral):

With the selector lever in this position, no gear is selected and no drive is transmitted from the engine. The engine may be started with the selector lever in this position.

CAUTION:
Do not coast with the selector lever at the "N" position.

C090E01O-AAT

o D (Drive):

Use for normal driving. The transaxle will automatically shift through a four gear sequence.

C090F02GK-GAT

Sports Mode

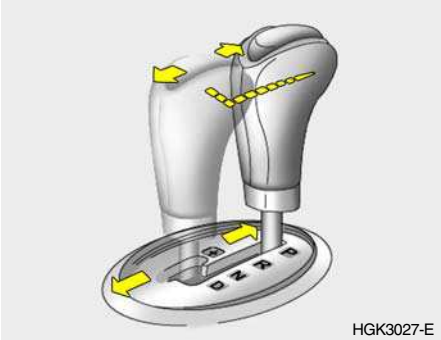

HGK3027-E

Whether the vehicle is stationary or in motion, sports mode is selected by pushing the selector lever from the "D" position into the manual gate. To return to "D" range operation, push the selector lever back into the main gate. In sports mode, moving the selector lever backward and forward can make rapid gearshifts simple. In contrast to a manual transaxle, the sports mode allows gearshifts with the accelerator pedal depressed.

UP (+) : Push the selector lever forward once to shift up one gear.
DOWN (-) : Pull the selector lever backwards once to shift down one gear.

CAUTION:
- **In sports mode, the driver must execute shifts in accordance with prevailing road conditions, taking care to keep the engine speed below the red zone.**
- **For engine protection, upward shifts are made automatically when the engine rpm reaches the red zone.**
- **By rapidly moving the selector lever backwards (-) twice it is possible to skip one gear by using the sports mode. Since sudden engine braking and/or rapid acceleration can cause a loss of traction, however, downshifts must be made carefully in accordance with the vehicle's speed.**

NOTE:

- o In sports mode, only the four forward gears can be selected. To reverse or park the vehicle, move the selector lever to the "R" or "P" position as required.
- o In sports mode, downward shifts are made automatically when the vehicle slows down. When the vehicle stops, 1st gear is automatically selected.
- o To maintain the required levels of vehicle performance and safety, the system may not execute certain gearshifts when the selector lever is operated.
- o Before driving away from a stop on a slippery road, push the selector lever forward into the +(UP) position. This causes the transaxle to shift into 2nd gear which is better for smooth driving away on a slippery road. Push the selector lever to the -(DOWN) side to shift back to 1st gear.

C090H01L-EAT

NOTE:

- o For smooth and safe operation, depress the brake pedal when shifting from "Neutral" position or "Park" position to a forward or reverse gear.
- o The ignition key must be in the "ON" position and the brake pedal fully depressed in order to move the selector lever from the "P" (Park) position to any of the other positions.
- o It is always possible to shift from "R", "N", "D" position to "P" position. The vehicle must be fully stopped to avoid transaxle damage.

C090I03L-EAT

CAUTION:

- o Shift into "R" and "P" position only when the vehicle has completely stopped.
- o Do not accelerate the engine in reverse or any of the forward positions with the brakes applied.
- o Always apply the footbrake when shifting from "P" or "N", to "R", "D"position.
- o Do not use the "P" (Park) position in place of the parking brake. Always set the parking brake, shift the transaxle into "P" (Park) position and turn off the ignition when you leave the vehicle, even momentarily. Never leave the vehicle unattended whilst the engine is running.
- o When accelerating from a stop on a steep hill, the vehicle may have a tendency to roll backwards. Shifting the shift lever into 2nd gear whilst in sport mode will help prevent the vehicle from rolling backwards.

- **Check the automatic transaxle fluid level regularly, and add fluid as necessary.**
- **See the maintenance schedule for the proper fluid recommendation.**

C090N04O-EAT

General Operating Instructions

- The engine may only be started when the selector lever is at position "P".
- Ensure that the footbrake is firmly applied when shifting from "P" or "N", to "R" or "D" and vice versa.
- Always engage the parking brake when the vehicle is unattended, never use the "P" position in place of the parking brake.
- Under normal circumstances, the selector lever should be placed in the "D" position and the transaxle allowed to select the most ideal ratio for the circumstances. In this position maximum fuel economy will be achieved.
- When descending steep gradients where engine braking is required, the selector lever should be shifted into 1st gear whilst in sport mode depending upon the vehicle speed.
- When climbing steep gradients and using large throttle openings, the transaxle may repeatedly change between two adjacent ratios. This is a normal characteristic and may be prevented by shifting into 1st gear whilst in sport mode depending upon the vehicle speed.
- Never move the selector lever to or from the "P" or "N" position with the accelerator depressed.
- If rapid acceleration is required, fully depress the accelerator pedal. In this condition, the kickdown mechanism will be operated and the transaxle will automatically downshift according to the vehicle speed.
- Do not depress the accelerator pedal with the brakes applied and the selector at the "R" or "D" position.
- The automatic transaxle may be used to great effect if the vehicle becomes stuck in snow or mud by allowing the vehicle to be rocked to and fro. The engine speed should be held at approximately 1,000rpm by means of the accelerator pedal and the selector lever moved between the "D" and "R" positions to induce a rocking motion.
- Optimum vehicle performance and economy is obtained by smoothly depressing and releasing the accelerator pedal.

WARNING:

- **Avoid high cornering speeds.**
- **Do not make quick steering wheel movements, such as sharp lane changes or fast, sharp turns.**
- **Always wear your seat belts. In a collision crash, an unbelted person is significantly more likely to die than a person wearing a seatbelt.**
- **The risk of rollover is greatly increased if you lose control of your vehicle at motorway speeds.**
- **Loss of control often occurs if two or more wheels drop off the roadway and the driver oversteers to reenter the roadway.**
- **In the event your vehicle leaves the roadway, do not steer sharply. Instead, slow down before pulling back into the travel lanes.**
- **Never exceed posted speed limits.**

- **If your vehicle becomes stuck in snow, mud, sand, etc., then you may attempt to rock the vehicle free by moving it forward and backward. Do not attempt this procedure if people or objects are anywhere near the vehicle. During the rocking operation the vehicle may suddenly move forward of backward as it becomes unstuck, causing injury or damage to nearby people or objects.**

ANTI-LOCK BRAKE SYSTEM (ABS)

C120A01FC-EAT

(Not all models)

The Anti-Lock Brake System (ABS) is designed to prevent wheel lock-up during sudden braking or on hazardous road surfaces. The ABS control module monitors the wheel speed and controls the pressure applied to each brake. Thus, in emergency situations or on slick roads, ABS will increase vehicle control during braking.

NOTE:

- **A click sound may be heard in the engine compartment when the vehicle begins to move after the engine is started. These conditions are normal and indicate that the anti-lock brake system (Electronic Stability Program) is functioning properly.**
- **During ABS (ESP) operation, a slight pulsation may be felt in the brake pedal when the brakes are applied. Also, a noise may be heard in the engine compartment whilst braking. These conditions are normal and indicate that the anti-lock brake system (Electronic Stability Program) is functioning properly.**

WARNING:
ABS (ESP) will not prevent accidents due to improper or dangerous driving manoeuvres. Even though vehicle control is improved during emergency braking, always maintain a safe distance between you and objects ahead. Vehicle speeds should always be reduced during extreme road conditions.
The braking distance for cars equipped with an anti-lock braking system (Electronic Stability Program) may be longer than for those without it, in the following road conditions. These roads should be driven at reduced speeds.

- **Rough, gravel or snow-covered roads.**
- **With tyre chains installed.**
- **On roads where the road surface is pitted or has different surface height.**

The safety features of an ABS (ESP) equipped vehicle should not be tested by high speed driving or cornering. This could endanger the safety of yourself or others.

ELECTRONIC STABILITY PROGRAM (ESP)

C310A01JM-EAT

(Not all models)

The Electronic Stability Program (ESP) system is designed to stabilise the vehicle during cornering manoeuvres. ESP checks where you are steering and where the vehicle is actually going. ESP applies the brakes at individual wheels and intervenes in the engine management system to stabilise the vehicle.

The Electronic Stability Program (ESP) system is an electronic system designed to help the driver maintain vehicle control under adverse conditions.

It is not a substitute for safe driving practices. Factors including speed, road conditions and driver steering input can all affect whether ESP will be effective in preventing a loss of control. It is still your responsibility to drive and corner at reasonable speeds and to leave a sufficient margin of safety.

CAUTION:
Driving with varying tyre or wheel size may cause the ESP system to malfunction. When replacing tyres, make sure they are the same size as your original tyres.

WARNING:
Electronic stability program is a driving aid; all normal precautions for driving in inclement weather and on slippery road surfaces should be observed.

C310B01JM-AAT

ESP ON/OFF Mode

When the ESP is operating, the ESP indicator in the instrument cluster will blink.
If you turn the system off by pressing the ESP switch, the ESP-OFF indicator will come on and stay on. In the ESP-OFF mode, the stability control will be deactivated. Adjust your driving accordingly. To turn the system back on, press the switch again. The ESP-OFF indicator should go off.

NOTE:
The ESP mode will automatically be turned ON after the engine is turned off and restarted.

C310D02JM-EAT

Indicators and Warning

The indicators should illuminate when the ignition key is turned ON or START but should go out after approximately 3 seconds.
If the indicators do not illuminate, or the ESP-OFF indicator does not go out after approximately 3 seconds, have the vehicle checked by a Hyundai authorised repairer.

Should there be any unusual conditions in the device whilst driving, ESP-OFF indicator illuminates as a warning.
If ESP-OFF indicator illuminates, pull your car to a safe place and stop the engine.
Then, start the engine again to check if the ESP-OFF indicator goes out.

If the indicator remains lit even after the engine has been started, have your car checked by a Hyundai authorised repairer.

EFFECTIVE BRAKING

SC140A2-E

Braking system performance and friction material life are greatly affected by the driving style adopted. The following suggestions are made to assist in achieving the best results from the braking system.

- o Anticipate the road and conditions ahead in order that heavy braking may be avoided.
- o When descending long gradients, use the engine to assist in retarding the vehicle to minimise the possibility of brake fade occurring.
- o When trailer towing, ensure that the trailer brakes function correctly and use engine braking to assist the vehicle braking system.
- o Use only genuine Hyundai replacement brake pads and shoes to ensure consistent friction characteristics and wear rates.
- o After driving through deep water (e.g. fording), the brakes may become wet and performance reduced. Always check brake efficiency after emerging from the water and dry the brakes by lightly depressing the brake pedal several times whilst driving slowly.

- o Apply the parking brake only when the vehicle is at rest.
- o Since the power assistance provided by the brake servo is derived from the engine, coasting with the engine turned off or towing of the vehicle with the engine turned off will result in greatly increased pedal pressures being required to stop the vehicle.
- o Do not hold the vehicle on an incline with the accelerator pedal. This can cause the transmission to overheat. Always use the brake pedal or parking brake.
- o Use caution when parking on a hill. Engage the parking brake and place the gear selector lever in "P" (automatic transaxle) or in first or reverse gear (manual transaxle). If your car is facing downhill, turn the front wheels into the curb to help keep the car from rolling. If your car is facing uphill, turn the front wheels away from the curb to help keep the car from rolling. If there is no curb or if it is required by other conditions to keep the car from rolling, block the wheels.

DRIVING FOR ECONOMY

C140A02A-EAT

You can save fuel and get more miles from your car if you follow these suggestions:

- o Drive smoothly. Accelerate at a moderate rate. Don't make "jack-rabbit" starts or full-throttle shifts and maintain a steady cruising speed. Don't race between stoplights. Try to adjust your speed to that of the other traffic so you don't have to change speeds unnecessarily. Avoid heavy traffic whenever possible. Always maintain a safe distance from other vehicles so you can avoid unnecessary braking. This also reduces brake wear.
- o Drive at a moderate speed. The faster you drive, the more fuel your car uses. Driving at a moderate speed, especially on the motorway, is one of the most effective ways to reduce fuel consumption.
- o Don't "ride" the brake or clutch pedal. This can increase fuel consumption and also increase wear on these components. In addition, driving with your foot resting on the brake pedal may cause the brakes to overheat, which reduces their effectiveness and may lead to more serious consequences.
- o Take care of your tyres. Keep them inflated to the recommended pressure. Incorrect inflation, either too much or too little, results in unnecessary tyre wear. Check the tyre pressures at least once a month.
- o Be sure that the wheels are aligned correctly. Improper alignment can result from hitting curbs or driving too fast over irregular surfaces. Poor alignment causes faster tyre wear and may also result in other problems as well as greater fuel consumption.
- o Keep your car in good condition. For better fuel economy and reduced maintenance costs, maintain your car in accordance with the maintenance schedule in Section 5. If you drive your car in severe conditions, more frequent maintenance is required (see Section 5 for details).

- Keep your car clean. For maximum service, your Hyundai should be kept clean and free of corrosive materials. It is especially important that mud, dirt, ice, etc. not be allowed to accumulate on the underside of the car. This extra weight can result in increased fuel consumption and also contribute to corrosion.
- Travel lightly. Don't carry unnecessary weight in your car. Weight reduces fuel economy.
- Don't let the engine idle longer than necessary. If you are waiting (and not in traffic), turn off your engine and restart only when you're ready to go.
- Remember, your Hyundai does not require extended warm-up. After the engine has started, allow the engine to run for 10 to 20 seconds prior to placing the vehicle in gear. In very cold weather, however, give your engine a slightly longer warm-up period.
- Don't "labour" or "over-rev" the engine. Labouring is driving too slowly in too high a gear resulting in the vehicle kangarooing. If this happens, shift to a lower gear. Over-revving is racing the engine beyond its safe limit. This can be avoided by shifting at the recommended speeds.
- Use your air conditioning sparingly. The air conditioning system is operated by engine power so your fuel economy is reduced when you use it.

SMOOTH CORNERING

C150A01A-EAT

Avoid braking or gear changing in corners, especially when roads are wet. Ideally, corners should always be taken under gentle acceleration. If you follow these suggestions, tyre wear will be held to a minimum.

WINTER MOTORING

DC170A1-E

The onset of winter conditions subject motor vehicles to greater operating demands. Therefore, the following suggestions will assist in maintaining peak performance and reliability during these periods:

ZC170B1-E

Electrical System

Winter conditions impose severe demands upon vehicle electrical systems, particularly the charging circuit. The battery condition and performance along with the alternator performance and drive belt condition should be checked prior to the onset of winter.

ZC170C1-E

Anti-freeze/Corrosion inhibitor

The cooling system must always contain an Ethylene-Glycol based anti-freeze solution. The system is filled during manufacture with solution of the correct strength which should be checked before the onset of winter and adjusted or changed as required.

NOTE:

The anti-freeze solution contains a corrosion inhibitor to prevent degradation of the aluminium castings contained within the engine. Therefore, never, drain the system and refill with water only.

In addition, anti-freeze solution must ALWAYS be used in vehicles fitted with air conditioning, to prevent the heater matrix from freezing and subsequently bursting with the refrigeration system in use.

ZC170D1-E

Door Locks

Should the door lock mechanism become frozen, a proprietary lock de-icer should be used. Alternatively, warming the door key may thaw the door lock. However, the key should be handled carefully to avoid burning the fingers. Never attempt to thaw a frozen door lock using hot water, since the water will eventually freeze and compound the problem.

NOTE:

The proper temperature for using the immobiliser key is from -40°C to 80°C (-40°F to 176°F). If you heat the immobiliser key over 80°C (176°F) to open the frozen lock, it may cause damage to the transponder in its head.

ZC170E1-E

Windscreen Washers & Wipers

The windscreen washer bottle should be filled with a solution of water and a proprietary winter screen wash additive. The windscreen wipers should not be used if the blades are frozen to the windscreen or if they are covered with snow, before this is removed.

NOTE:

Never allow undiluted screen washer fluid additive to spill upon the paintwork or use engine coolant anti-freeze since damage to the paintwork may result.

- o When driving in extreme conditions, the windscreen wiper blades may fail to clear the screen properly due to the formation of ice upon the blade edge. It will therefore be necessary to periodically remove such ice to restore their efficiency.
- o If the power operated door mirrors become frozen, attempts to adjust these may damage the mechanism.
- o The formation of snow or ice build up inside the wheel arches may interfere with the roadwheels or steering mechanism. In such instances, unusual noises or an increase in steering effort may result. Therefore, ensure that the wheelarches are checked periodically and any accumulated snow or ice removed.
- o It is advisable to carry emergency equipment including, torch, shovel, tow rope, blankets etc., if a journey is to be undertaken into areas of severe road conditions.

TRAILER OR VEHICLE TOWING

YC200A2-E

If you are considering towing with your car, you should first check with your Local Laws to determine their legal requirements.
Since laws vary from county to county, the requirements for towing trailers, cars, or other types of vehicles or apparatus may differ. Ask your Hyundai authorised repairer for further details before towing.

CAUTION:

Do not carry out any towing with your car during it's first 1000 miles in order to allow both the engine to have properly run-in and the clutch (manual transaxle) to have correctly bedded-in. Failure to heed this caution may result in serious engine or transaxle damage.

YC200B2-E
Trailer Towbars

Select the proper towbar and ball combination, making sure that its location is compatible with that of the trailer or vehicle being towed.
Use a quality non-equalizing towbar which distributes the nose weight uniformly throughout the chassis.

The towbar should be bolted securely to the car and installed by a qualified technician.

YC200C4-E
Trailer Brakes

If your trailer is equipped with a braking system, make sure it conforms to local regulations and that it is properly installed and operating correctly.

NOTE:
If you tow a trailer or vehicle, your car will require more frequent maintenance due to the additional load. See Maintenance Under Severe Usage Conditions" on page 5-7.

CAUTION:
- **Never connect a trailer brake system directly to the vehicle brake system.**
- **When towing a trailer on steep grades (in excess of 6%) pay close attention to the engine coolant temperature gauge to ensure the engine does not overheat. If the needle of the coolant temperature gauge moves across the dial towards "H" (HOT), pull over and stop as soon as it is safe to do so, and allow the engine to idle until it cools down. You may proceed once the engine has cooled sufficiently.**

YC200D2-E

Safety Cables

Should the towbar connection between your car and the trailer or vehicle you are towing fail, the trailer or vehicle could wander dangerously across other lanes of traffic and ultimately leave the roadway. To eliminate this potentially dangerous situation, safety cable, attached between your car and the trailer or towed vehicle, are required.

C190E01GK-EAT

Trailer Weight Limit

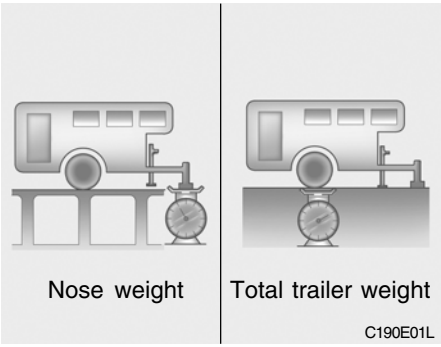

Nose weights can be increased or decreased by re-distributing the load in the trailer.
This can be verified by checking the total weight of the loaded trailer and then checking the nose weight.

NOTE:

1. **Never load the trailer with more weight in the back than in the front. About 60% of the trailer load should be in the front half on the trailer and the remaining 40% in the rear.**

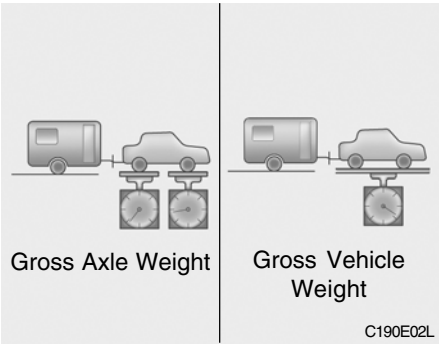

2. **The total gross vehicle weight with trailer must not exceed the Gross Vehicle Weight Rating (GVWR) shown on the vehicle identification plate (see page 8-2). The total gross vehicle weight is the combined weight of the vehicle, driver, all passengers and their luggage, cargo, towbar hitch, trailer nose weight and other optional equipment.**

3. **The front or rear axle weight must not exceed the Gross Axle Weight Rating (GAWR) shown on the vehicle identification plate (see page 8-2). It is possible that your towing package does not exceed the GVWR but exceeds the GAWR.**
   Improper trailer loading and/or too much luggage in the luggage compartment can overload the rear axle. Redistribute the load and check the axle weight again.
4. **The maximum permissible static vertical load(nose weight) on the coupling device is;**

Lbs. (Kg)

1.6L	110 (50)
2.0L/2.7L	132 (60)

View from below the vehicle coupling point

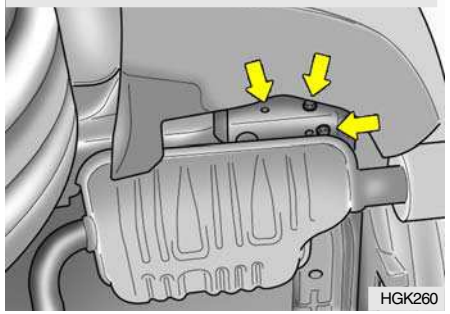

5. **The maximum permissible overhang of the coupling point is 38.97 inches.**

CAUTION:
The following specifications are recommended when towing a trailer. The loaded trailer weight cannot safely exceed the values in the chart.

Lbs. (Kg)

		Maximum Towable Weight Trailer
Without Brake Type		1,212 (550)
With Brake Type	1.6L	2,645 (1,200)
	2.0L/2.7L	3,086 (1,400)

WARNING:
Improper loading of your car and trailer can seriously affect its steering and braking performance causing a crash which could cause serious injury or death.

YC200E3-E

Trailer or Vehicle Towing Tips

1. Before towing, check towbar ball and safety cable connections as well as proper operation of the trailer running lights, brake lights, and turn signals.
2. Always drive your vehicle at a moderate speed (Less than 60 mph).
3. Trailer towing requires more fuel than normal conditions.
4. To maintain engine braking efficiency, do not tow a trailer with the transaxle in fifth gear (manual transaxle) or overdrive (automatic transaxle).
5. Always secure items in the trailer to prevent load shift whilst driving.
6. Check the condition and air pressure of all tyres on the trailer and your car. Low tyre pressure can seriously affect the handling. Also check the spare tyre.
7. The vehicle/trailer combination is more affected by crosswind and buffeting. When being passed by a large vehicle, keep a constant speed and steer straight ahead. If there is too much wind buffeting, slow down to get out of the other vehicle's air turbulence.
8. When parking your car and trailer, especially on a hill, be sure to follow all the normal precautions. Turn your front wheels into the curb, set the parking brake firmly, and put the transaxle in 1st or Reverse (manual) or Park (automatic). In addition we advise the use of wheel chocks at each of the trailer's tyres.
9. If the trailer has electric brakes, start your vehicle and trailer moving, and then apply the trailer brake controller by hand to be sure the brakes are working. This lets you check your electrical connection at the same time.
10. During your trip, check occasionally to be sure that the load is secure, and that the lights and any trailer brakes are still working.
11. Avoid jerky starts, sudden acceleration or sudden stops.
12. Avoid sharp turns and rapid lane changes.
13. Avoid holding the brake pedal down too long or too frequently. This could cause the brakes to overheat, resulting in reduced braking efficiency.
14. When going down a hill, shift into a lower gear and use the engine braking effect.
    When climbing a long grade, downshift the transaxle to a lower gear and reduce speed to reduce chances of engine overloading and/or overheating.
15. If you have to stop whilst going uphill, do not hold the vehicle in place by pressing on the accelerator. This can cause the automatic transaxle to overheat. Use the parking brake or footbrake.

NOTE:

When towing, check transaxle fluid more frequently.

CAUTION:

If overheating should occur when towing, (temperature gauge reads near red zone), taking the following action may reduce or eliminate the problem.

1. **Turn off the air conditioner.**
2. **Reduce highway speed.**
3. **Select a lower gear when going uphill.**
4. **Whilst in stop and go traffic, place the gear selector in park or neutral and idle the engine at a higher speed.**

IN CASE OF EMERGENCY

If the Engine will not Start 3-2
Jump Starting 3-3
If the Engine Overheats 3-4
Temporary Spare Tyre 3-5
In the Event of a Puncture 3-6
Changing a Flat Tyre 3-7
If Your Vehicle Must be Towed 3-11
Emergency Towing 3-13
If You Lose Your Keys 3-14

2 IF THE ENGINE WILL NOT START

SD020A1-E

Seek assistance from the nearest Hyundai authorised repairer with regard to the method of ignition and fuel system diagnosis.

WARNING:

If the engine refuses to start, no attempt should be made to push or tow start the vehicle. Vehicles with automatic transaxle or fuel injection will not be able to be started in this manner since no drive is transmitted through the automatic transaxle whilst the engine is not running, and in the case of fuel injected derivatives, the fuel pump will not operate under tow start conditions. In addition, if the vehicle is equipped with an exhaust catalyst, damage to the catalyst may result if the vehicle is tow started.

SD020B1-E

If the Engine Cannot be Cranked

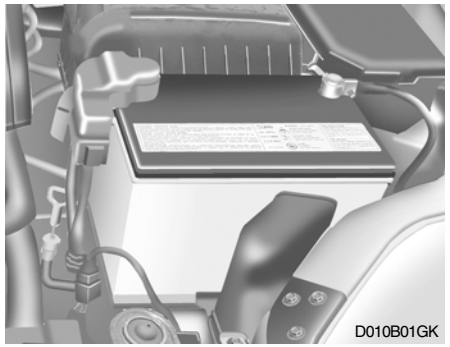

1. If the vehicle is fitted with manual transaxle, ensure that the clutch pedal is depressed whilst cranking the engine. If the vehicle is fitted with automatic transaxle, ensure that the transaxle selector is at the "P" or"N" position.
2. Check the battery terminals and connections to ensure that these are clean and also tight.
3. If the ignition warning lights dim when the engine is cranked and the battery terminals have been checked, a discharged battery is indicated.
4. Do not attempt to push or tow start the vehicle, refer to "Jump Starting" for information regarding engine starting when the battery is discharged.

JUMP STARTING

D010C01A-EAT

If Engine Turns Over Normally but Does Not Start

1. Check fuel level.
2. With the key in the off position, Check all connectors at ignition coils and spark plugs. Reconnect any that may be disconnected or loose.
3. Check the fuel line in the engine room.
4. If engine still refuses to start, call a Hyundai authorised repairer or seek other qualified assistance.

D010D01A-EAT

If Engine Stalls While Driving

1. Reduce your speed gradually, keeping a straight line. Move cautiously off the road to a safe place.
2. Turn on your hazard lights.
3. Try to start the engine again. If your vehicle will not start, contact a Hyundai authorised repairer or seek other qualified assistance.

SD030A2-E

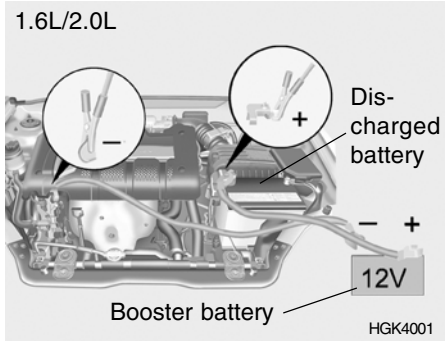

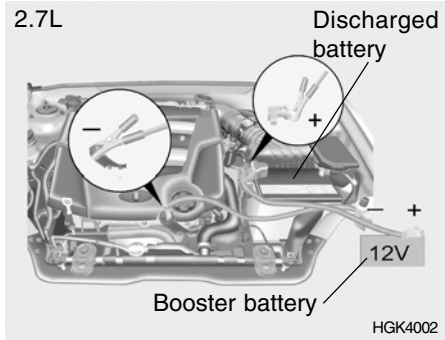

CAUTION:
Personal injury and damage to the vehicle may occur if jump starting is not performed correctly. If any doubt exists as to how this operation should be performed, seek assistance from qualified personnel.

WARNING:
Motor vehicle batteries contain sulphuric acid and emit hydrogen gas. Protective clothing should be worn and care exercised to prevent the acid from coming into contact with skin or clothing and the vehicle. Naked lights should not be permitted in the vicinity of the battery. Care should be exercised to prevent sparks occurring during connection. If acid accidentally comes into contact with skin or eyes, the affected area should immediately be flushed with copious amounts of water and medical assistance sought.

1. Ensure that the booster battery is 12 volt type. If the booster battery is installed in another vehicle, ensure that the two vehicles are not touching.
2. Turn off all unnecessary electrical equipment in both vehicles.
3. Ensure that the engine of the vehicle providing the jump start is running prior to connection of the jump cables.
4. Connect the red jump cable to the positive (+) terminal of the booster battery and the other end to the positive (+) terminal of the discharged battery.
5. Attach the black jump cable to the negative (-) terminal of the booster battery, and the other end to a ground point within the engine compartment of the vehicle with the flat battery. Do not connect to the negative battery terminal of the flat battery since sparks may be generated with the subsequent risk of explosion.
6. Raise the booster vehicle engine speed to 2,000 r.p.m. and start the engine of the vehicle with the flat battery.
7. Switch "ON" the main beam headlamps before carefully removing the jumper cables have been removed, switch "OFF" the main beam headlamps.

CAUTION:

If the jump cables are incorrectly installed, damage to the vehicle electrical system may occur, in particular the electronic components such as the Fuel Injection system computer and the Automatic Transaxle computer. The battery must never be disconnected whilst the engine is running.

IF THE ENGINE OVERHEATS

SD040A2-E

If the temperature gauge indicates overheating:

1. Pull off the road and stop as soon as it is safe to do so.
2. Place the gear selector lever in "P" (automatic), or neutral (manual transaxle) and set the parking brake. If the air conditioning is on, turn it off.
3. If coolant is running out under the car or steam is coming out from under the bonnet stop the engine. Do not open the bonnet until the coolant has stopped running or the steaming has stopped. If there is no visible loss of coolant and no steam, leave the engine running and check to be sure the engine cooling fan is operating.
   If the fan is not running, turn the engine off.
4. Check to see if the water pump drive belt is broken. If it is not missing, check to see that it is tight. If the drive belt seems to be satisfactory, check for coolant leaking from the radiator, hoses or under the car. (If the air conditioning had been in use, it is normal for cold water to be draining from it).

WARNING:
Whilst the engine is running, keep hands and clothing away from moving parts such as the fan and drive belts to prevent injury.

5. If the water pump drive belt is broken or coolant is leaking out, stop the engine immediately and call the nearest Hyundai authorised repairer for assistance.

WARNING:
Do not remove the radiator cap when the engine is hot since steam and boiling water may be ejected from the radiator resulting in burns or scalding.

6. If the cause of the overheating cannot be found, wait until the engine temperature has returned to normal. Then, if coolant has been lost, carefully add coolant to the reservoir (page 6-10) to bring the fluid level in the reservoir up to the base of the radiator fill opening. Fill the coolant expansion tank to the halfway mark. To ensure the correct water to coolant mix is obtained after top up, testing by an authorised repairer is required.
7. Proceed with caution until it is established that the engine is operating normally. If the engine overheats repeatedly, the advice of a Hyundai authorised repairer should be sought.

CAUTION:
Serious loss of coolant indicates there is a leak in the cooling system and this should be checked as soon as possible by a Hyundai authorised repairer.

D040A01GK-EAT

The following instructions for the temporary spare tyre should be observed:

1. Check inflation pressure as soon as practical after installing the spare tyre, and adjust to the specified pressure. The tyre pressure should be periodically checked and maintained at the specified pressure whilst the tyre is stored.

Spare Tyre Pressure

Tyre Size	T125/70 R16
Inflation Pressure	420 kPa (60 psi)

2. The spare tyre should only be used temporarily and should be returned to the luggage compartment as soon as the original tyre can be repaired or replaced.
3. Continuous use at speeds of over 50 mph (80 km/h) is not recommended.
4. As the temporary spare tyre is specifically designed for your car, it should not be used on any other vehicle.

5. The temporary spare tyre should not be used on any other wheels, nor should standard tyre, snow tyre, wheel covers or trim rings be used with the temporary spare wheel. If such use is attempted, damage to these items or other car components may occur.
6. The temporary spare tyre pressure should be checked once a month whilst the tyre is stored.

CAUTION:

- **Do not use snow chains with your temporary spare tyre.**
- **Do not use more than one temporary spare tyre at a time.**

D040B01A-EAT

Handling the Spare Tyre

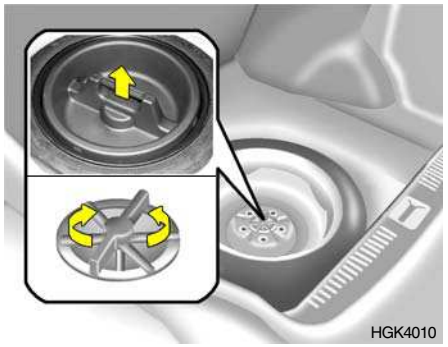

Remove the installation bolt to remove the spare tyre. To replace the spare tyre in its storage compartment, tighten the bolt firmly with your fingers until there is no more play in the spare tyre.

IN THE EVENT OF A PUNCTURE

SD060A1-E

If a puncture occurs whilst driving the vehicle:

1. Bring the car to rest as soon as it is safe to do so and with the minimum amount of braking required which will assist in maintaining the maximum amount of control. The vehicle should be parked wherever possible upon firm level ground to facilitate wheel changing.
2. If the vehicle is creating a hazard and the road conditions do not permit the wheel to be changed safely, assistance should be sought.
3. Passengers must not be allowed to remain inside the vehicle during wheel changing. If a puncture occurs whilst the vehicle is on a motorway, the passengers should take refuge on the motorway embankment to avoid the possibility of injury occurring should the vehicle be struck by other motorway traffic.
4. Wheel changing should be performed according to the following instructions.

CHANGING A FLAT TYRE

SD070A1-E

It is of the utmost importance that care is exercised when changing road wheels. Ensure that the parking brake is set and that the gear shift lever is in reverse (P, if the vehicle has automatic transaxle).

D060B01GK-EAT

1. Obtain Spare Tyre and Tool

Remove the spare tyre, jack and tool bag from the boot.

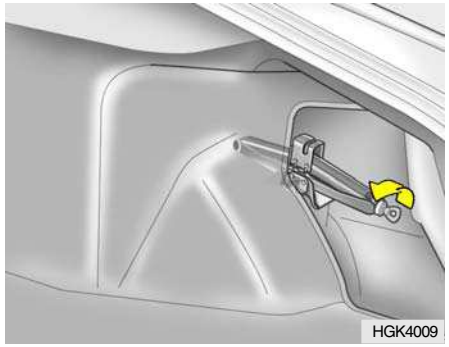

The jack is located behind the right side of luggage trim. Remove the jack cover with screwing the bolts. Turn the jack end counterclockwise to lower the jack height by using a screw driver or wrench bar and remove it from the bracket.

SD070D1-E

2. Block the Wheel

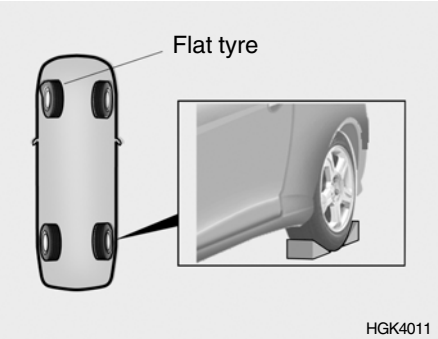

Block the wheel that is diagonally opposite from the flat tyre to prevent the vehicle from rolling when the car is raised on the jack.

ZD070F1-E

3. Loosen Wheel Nuts

The wheel nuts should be loosened slightly before raising the car. To loosen the nuts, turn the wrench handle counterclockwise. When doing this, be sure that the socket is seated completely over the nut so it cannot slip off. For maximum leverage, position the wrench so the handle is to the right as shown in the drawing. Then, whilst holding the wrench near the end of the handle, pull up on it with steady pressure. Do not remove the nuts at this time. Just loosen them about one-half turn.

D060E01A-AAT

4. Put the Jack in Place

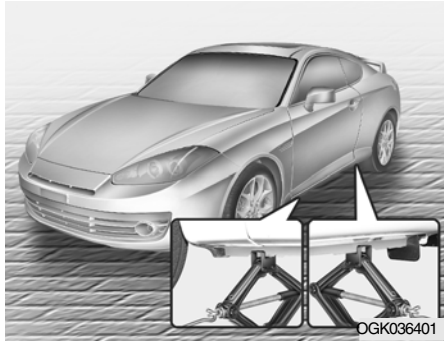

The base of the jack should be placed on firm, level ground. The jack should be positioned as shown in the illustration.

SD070G1-E

5. Raising the Car

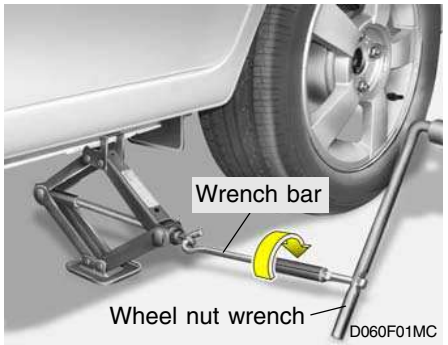

After inserting a wrench bar into the wheel nut wrench, install the wrench bar into the jack as shown in the drawing. As the jack begins to raise the vehicle, double check that it is properly positioned and will not slip. If the jack is on soft ground or sand, it may be necessary to place a stout piece of timber under the base of the jack to prevent it from sinking.
Raise the car high enough so that the fully inflated spare tyre can be installed.

WARNING:
Do not get under the car when it is supported by the jack! The jack is solely designed for wheel changing and is not intended to support the vehicle for other purposes. The use of purpose designed supports is necessary whilst the vehicle is raised and the operator is required to get underneath.

D060G02Y-EAT

6. Changing Wheels

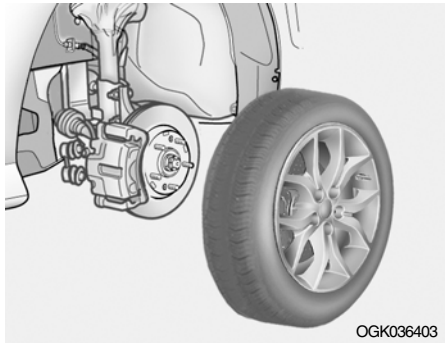

Loosen the wheel nuts and remove them with your fingers. slide the wheel off the studs and lay it flat so it cannot roll away. To put the wheel on the hub, pick up the spare tyre, line up the holes with the studs and slide the wheel onto them. If this is difficult, tip the wheel slightly and get the top hole in the wheel lined up with the top stud. Then jiggle the wheel back and forth until the wheel can be slid over the other studs.

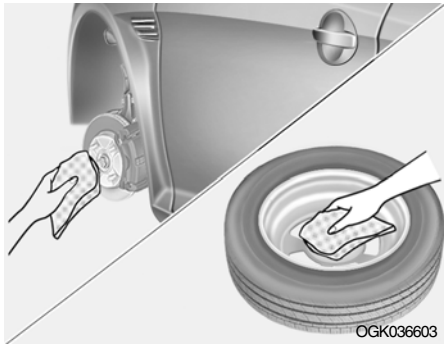

WARNING:
Wheels and wheel cover may have sharp edges. Handle them carefully to avoid possible severe injury.
Before putting the wheel into place, be sure that there is nothing on the hub or wheel (such as mud, tar, gravel, etc.) that interferes with the wheel from fitting solidly against the hub. If there is, remove it. If there is not good contact on the mounting surface between the wheel and hub, the wheel nuts could come loose and cause the loss of a wheel. Loss of a wheel may result in loss of control of the vehicle. This may cause serious injury or death.

D060H02A-EAT

7. Reinstall Wheel Nuts

To reinstall the wheel hold it on the studs put the wheel nuts on the studs and tighten them finger tight. The nuts should be installed with their small diameter ends directed inward. Jiggle the tyre to be sure it is completely seated, then tighten the nuts as much as possible with your fingers again.

D060I01E-EAT

8. Lower Vehicle and Tighten Nuts

Lower the car to the ground by inserting the wheel nut wrench into the wrench bar and turning the wheel nut wrench counterclockwise.
Then position the wrench as shown in the drawing and tighten the wheel nuts. Be sure the socket is seated completely over the nut. Do not stand on the wrench or use an extension pipe over the wrench handle.

Go around the wheel tightening every other nut until they are all tight. Then double-check each nut for tightness. After changing wheels, have a technician tighten the wheel nuts to their proper torque as soon as possible.

Wheel nut tightening torque

Steel wheel & aluminium alloy wheel: 90-110 Nm. (65-80 lb.ft)

SD070K1-E

AFTER CHANGING WHEELS

The pressure of the spare tyre should be checked at the first available opportunity. If any doubt exists as to the tyre pressure, the vehicle should be driven slowly to the nearest service station and the tyre pressure checked and adjusted as required.
If the valve cap is lost from any of the valves, a replacement should be obtained and fitted at the first available opportunity. The valve cap prevents the ingress of dirt which may cause the valve to stick and therefore leak and is part of the valve sealing function.

Ensure that the spare wheel, jack and wheel nut wrench as well tools are correctly located in the boot of the vehicle to prevent damage and noise.

D080A01O-EAT

If your vehicle has to be towed, it should be done by your Hyundai authorised repairer or a commercial tow truck service. This will help assure that your vehicle is not damaged in towing. Also, professionals are generally aware of local laws governing towing. In any case, rather than risk damage to your car, it is suggested that you show this information to the tow truck operator. Be sure that a safety chain system is used and that all local laws are observed.
It is recommended that your vehicle be towed with a wheel lift and dollies or flatbed equipment with all the wheels off the ground.

CAUTION:

- **Your vehicle can be damaged if towed incorrectly!**
- **Be sure the transaxle is in neutral.**
- **When the engine will not start, be sure the steering is unlocked by placing the key in the "ACC" position.**

D080B01O-GAT

Towing the Vehicle

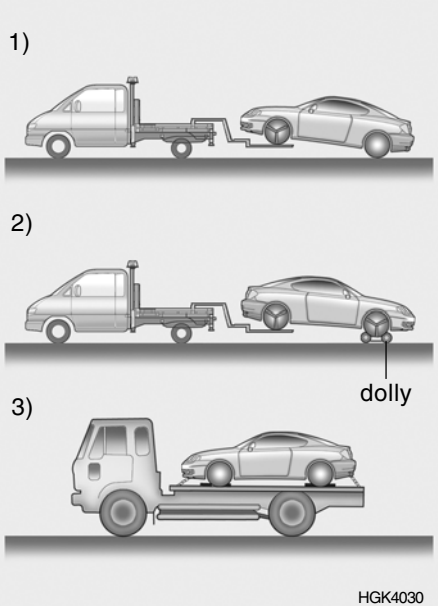

Your vehicle can be towed by wheel lift type truck (1), (2) or flatbed equipment (3).

CAUTION:

- **When towing the vehicle, take care not to cause damage to the bumper or underbody of the vehicle.**

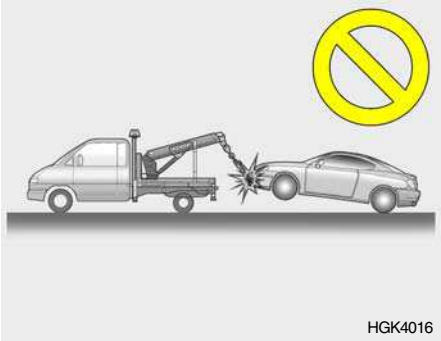

- **Do not tow with sling type truck as this may cause damage to the bumper or underbody of the vehicle.**

1) If the vehicle is being towed with the rear wheels on the ground, be sure the parking brake is released.

NOTE:

Before towing, check the level of the automatic transaxle fluid. If it is below the "HOT" range on the dipstick, add fluid. If you cannot add fluid, a towing dolly must be used.

2) If any of the loaded wheels or suspension components are damaged or the vehicle is being towed with the front wheels on the ground, use a towing dolly under the front wheels.

- o Manual Transaxle:
  If you do not use a towing dolly, place the ignition key in the "ACC" position and put the transaxle in "N (Neutral)".

CAUTION:

Do not tow with the key removed or in the "LOCK" position when towing from the rear without a towing dolly.

o Automatic Transaxle:
Be sure to use a towing dolly under the front wheels.

CAUTION:

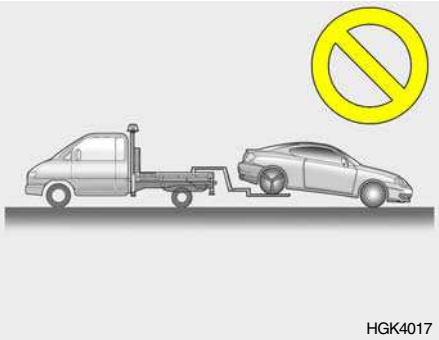

A vehicle with an automatic transaxle should never be towed from the rear with the front wheels on the ground. This can cause serious damage to the transaxle.

3) It is recommended that your vehicle be towed with all the wheels off the ground.

D080D02A-EAT

Emergency Towing

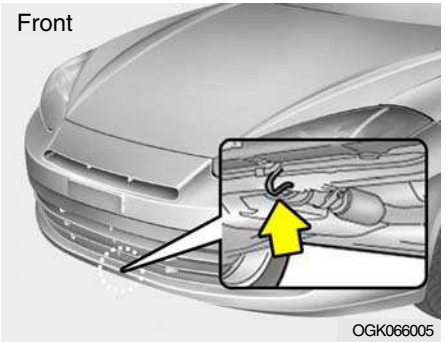

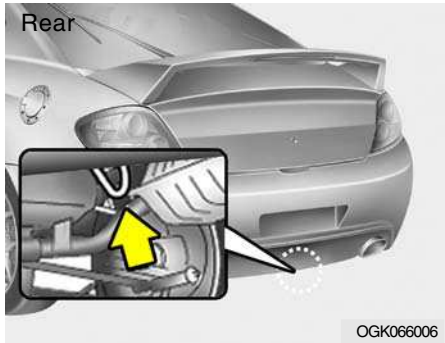

For emergency towing when no commercial tow vehicle is available, attach a tow cable, chain or strap to one of the towing hooks under the front/rear of your car.

Do not attempt to tow your vehicle in this manner on any unpaved surface. This could result in serious damage to your car.
Nor should towing be attempted if the wheels, drive train, axles, steering or brakes are damaged. Before towing, be sure the transaxle is in neutral and the key is in "ACC" (with the engine off) or in the "ON" position (with the engine running). A driver must be in the towed car to steer it and operate the brakes.

CAUTION:

- **If the car is being towed with all four wheels on the ground, it can be towed only from the front. Be sure that the transaxle is in neutral. Do not tow at speeds greater than 30 mph (50 km/h) and for more than 15 miles (25 km).**
- **Be sure the steering is unlocked by placing the key in the "ACC" position.**

IF YOU LOSE YOUR KEYS

D120A01A-EAT

Information about the key of immobiliser system will be found on page 1-4.

APPEARANCE CARE

Protecting Your Hyundai from Corrosion 4-2
Underbody Coatings 4-2
Valeting 4-3
Interior Valeting 4-5

PROTECTING YOUR HYUNDAI FROM CORROSION

ZE020A1-E

In using the most advanced design and construction practices, every Hyundai is built to retain its original factory finish for many years. However, long term durability is also greatly dependant upon maintaining the various protection systems and coatings used in manufacture since constant exposure to the elements will eventually result in their breakdown and loss of effectiveness. The following suggestions are made to assist in the maintenance of the vehicle bodywork.

ZE020B1-E

UNDERBODY COATINGS

Every Hyundai passenger car receives a full underbody and cavity injection treatment during production. In order that this treatment may retain maximum effectiveness, it is recommended that the underbody receives a power wash and a thorough inspection after each winter season. In doing so any accumulations of mud, which act as moisture traps and combine with road salts to accelerate corrosion, will be removed. Should any damage to or deterioration of the underbody coating be apparent, the advice of a Hyundai authorised repairer regarding the use of a compatible repair material should be sought.

NOTE:

The underbody should never be steam cleaned since the underbody coating may be removed by this process.

During the interim period between power washing the underbody, the more vulnerable areas such as wheelarches should be hosed off, particularly during the winter season to prevent prolonged contact of road salt with the body.

Ensure that the various drain points located at bottom of the door panels are kept clear, to prevent water becoming trapped within the cavities. Wherever possible, the parking of the vehicle in a confined, poorly ventilated location (e.g.) garage should be avoided when the vehicle is wet or covered with snow or ice. Under these conditions, the internal cavities of the vehicle will remain damp for long periods of time which encourage corrosion. Parking the vehicle where good ventilation exists is preferable.

ZE020C1-E

INTERIOR

During the winter period, it is possible that the carpet within the passenger compartment may become wet. The carpet should not be allowed to remain in this condition for prolonged periods since the carpet may begin to create musty smells and promote internal corrosion of the floorpan.

GKE050A2-E

Regular cleaning of the exterior paintwork serves two important functions. Firstly, the removal of abrasive dirt and contaminants will maintain the lustre of the paintwork and will prevent discolouration and dulling due to prolonged contact.
Secondly, the presence of damage through impact or abrasion will be apparent allowing early rectification to be made thus preventing corrosion from becoming established and spreading beneath the paint film. To avoid "water spotting" the vehicle should not be washed in direct sunlight particularly in the case of vehicles having dark body colours. The heat from the sun rays is absorbed by the paint film increasing the surface temperature. This action causes water used for washing to evaporate quickly leaving behind the deposits from the water and the shampoo used.

Use only a shampoo intended for the purpose and ensure that the body work is thoroughly wet to soften the dirt film prior to removal.
After removing the dirt film with a soft sponge, the body work should be thoroughly rinsed and then dried with a good quality chamois leather to prevent streaking or spotting of the paint work.
Household detergents, solvents and abrasive cleaning materials should not be used in order to avoid damaging the paint film.
High pressure car washes may cause water to enter your car.
Plastic wheel covers should be cleaned using a sponge and water. Cast alloy wheels should be cleaned using a mild soap or neutral detergent. Abrasive compounds must not be used since in the event of these damaging the lacquer coating, oxidisation of the aluminium wheel will occur, spoiling the appearance.
The use of a toothbrush will facilitate cleaning between the wheel "spokes".

CAUTION:

- **Water washing in the engine compartment may cause the failure of electrical circuits located in the engine compartment.**
- **Never allow water or other liquids to come in contact with electrical/ electronic components inside the vehicle as this may damage them.**

JE060A1-E

Stain/Spot Removal

Should tree sap, dead insects or tar prove to be difficult to remove from the paint film, turpentine or a proprietary paint cutting compound may be used. Ensure that the area to be cleaned is not rubbed intensively to prevent breaking through the colour coat and exposing the under coat.

JE070A1-E

Polishing

The exterior paint work should be polished with a proprietary wax polish when water no longer collects in bead form on the paint work. The instructions of the product manufacturer should be adhered to.

JE080A1-E

Bumper Maintenance

The special material from which the bumpers are manufactured warrants special attention to preserve the appearance of the bumpers. Avoid contact with battery electrolyte or brake fluid and ensure that accidental spillages are immediately flushed with water.
Do not use abrasive cleaning materials which may damage the bumpers.
Avoid subjecting the bumpers to high temperatures E.g. encountered in high bake paint ovens.

JE090A1-E

Accident Repairs

In the event of the body work sustaining damage, the following points should be noted prior to repairs being undertaken.
If body panels are replaced or repaired, anti corrosion treatment must be applied to the repair area. The product used must be compatible with those used in manufacture. It is recommended that repairs are entrusted to a Hyundai authorised repairer to ensure that replacement parts used are of the same high quality as those used in manufacture of the vehicle and that the correct repair methods and materials will ensure adequate levels of corrosion protection and the continued validity of the Anti Perforation Warranty.

INTERIOR VALETING

JE110A1-E

The soft trim and carpets should be maintained with the regular use of a vacuum cleaner. Heavy soiling should be removed with a dry cleaning agent recommended for this purpose following the instructions of the product manufacturer. Paint thinner, solvents or other such cleaning materials should not be used since damage to the upholstery may result.

JE100A1-E

Seat Belts

Seat belts should be cleaned only with a mild soap solution. Strong detergents, solvents or bleaches may damage the belt webbing and therefore reduce the effectiveness of the belt. Belts which display signs of fraying, wear or cuts should be replaced.

JE120A1-E

Windows

A proprietary glass cleaner should be used to clean the inside of the windows. However, the rear heated windscreen must only be cleaned using a light horizontal cleaning action. Care should be exercised to avoid the use of abrasive cleaners or contact with items of jewellery which may damage the heating elements.

YE010A1-E

To Clean Leather Upholstery (Not all models)

In the normal course of use, leather upholstered surfaces will, like any material, pick-up dust and dirt. This dust and dirt MUST be cleaned off or it may work into the surface of the leather, causing damage.

Fine leather needs care. This care, as with all fine things, need not be elaborate, but should include cleaning when necessary. Washing leather thoroughly with soap and water will keep your leather lustrous, beautiful and ensure you have many years of wear.
Take a piece of cheese cloth and using any mild soap and lukewarm water, work up a good lather. Thoroughly wash the leather. Wipe clean with a slightly damp cloth and dry with soft cloth. Do this as often as the leather becomes soiled.
During tanning operations, sufficient oils are incorporated through processing that none need be applied during the life of the leather. Oil applied to the finished surface will in no way help the leather and may do more harm than good. Varnished and furniture polishes should NEVER be used under any conditions.

VEHICLE MAINTENANCE REQUIREMENTS

Maintenance and Servicing Requirements 5-2
Scheduled Maintenance 5-4
Maintenance under Severe Usage Conditions 5-7
Explanation of Scheduled Maintenance Items 5-8

5

2 MAINTENANCE AND SERVICING REQUIREMENTS

SF020A1-E

To ensure the continued reliability and safety of the vehicle, certain routine maintenance operations are required at specific mileage or time intervals.
It is the responsibility of the vehicle owner to ensure that the maintenance schedules shown in both this Owners Manual and the Warranty and Service Passport are adhered to.
The new vehicle warranty may be invalidated if the routine maintenance operations are not performed in line with the recommendations outlined and the safety and durability of the vehicle adversely affected.
It is recommended that all maintenance operations with the exception of the daily operating checks are entrusted to a Hyundai authorised repairer to ensure that the latest repair and maintenance procedures and specialised servicing tools are employed. In addition, the use of genuine Hyundai replacement parts will ensure that the vehicle safety and performance will not be compromised.

NOTE:
The inspection and testing of certain electronic fuel injection/engine management and automatic transmission control systems require specialised electronic equipment specifically designed for Hyundai vehicles. The use of general purpose electrical test equipment may result in damage to the control unit microprocessors.

SF020C2-E

Specified Scheduled Procedures

The Specified scheduled procedures are listed in the maintenance charts beginning at page 5-4. The operations specified must be performed at the time or mileage intervals shown irrespective of whether the mileage interval has been reached before the specified time interval.
Certain lubricants and components degrade with both time and mileage (e.g. engine oil and brake fluid) and therefore it is not permissable to base the maintenance schedule upon mileage alone. It is strongly recommended that the maintenance operations are performed by the factory-trained or distributor-trained technicians at your Hyundai authorised repairer because of the need for specialised knowledge and tooling and to ensure that no possibility of invalidating the manufacturers warranty exists.
The maintenance schedules relate to vehicles operated under normal conditions, vehicles which are operated under adverse conditions will require more frequent maintenance which is described at page 5-7.

NOTE:
Service schedules may change depending on individual country needs. Please ask your local Hyundai authorised repairer for a copy of the service schedule that relates to that country.

SF030B1-E
SERVICE HISTORY

It is important that all scheduled maintenance services are recorded in the warranty and service passport to ensure that proof of maintenance is available when warranty service is required.

SCHEDULED MAINTENANCE

YF010A2-E

In order to ensure continued reliability, safety and longevity, regular maintenance performed at the intervals specified is essential. The maintenance intervals specified are based both on time elapsed and mileage covered since the previous maintenance service was performed. However, under severe operating conditions, certain scheduled operations should be performed at shorter intervals.
Regular maintenance should be entrusted to a Hyundai authorised repairer who is best able to provide the expertise required to ensure optimum operational performance.
In addition the use of Hyundai replacement parts and service consumables will ensure that the original build quality, operational performance and safety are maintained.

F030B06GK-EAT

R : Replace I : Inspect and, after inspection, clean, adjust, repair or replace if necessary

NO.	DESCRIPTION		MILES X 1000	10	20	30	40	50	60
			MONTHS	12	24	36	48	60	72
	ENGINE CONTROL SYSTEM MAINTENANCE								
1	ENGINE OIL & FILTER			R	R	R	R	R	R
2	DRIVE BELT	1.6L/2.0L (ALT, W/PUMP, P/STR'G)		I	I	I	I	I	I
		2.7L (AUTO-TENSIONER, ALT, P/STR'G, A/CON)				I			I
3	FUEL FILTER (MPI)						R		
4	FLUID LEAKS			I	I	I	I	I	I
5	TIMING BELT	2.7L				I			R
		2.0L		See Note (1)					
6	TIMING BELT TENSIONER AND IDLER (2.0L)			See Note (2)					
7	VACUUM HOSE			I	I	I	I	I	I
8	CRANKCASE VENTILATION HOSE							I	
9	AIR CLEANER FILTER			I	R	I	R	I	R

NOTE : (1) FOR EVERY 60,000 MILES OR 48 MONTHS: "I" AND FOR EVERY 90,000 MILES OR 72 MONTHS: "R"
(2) WHEN TIMING BELT IS INSPECTED OR REPLACED WHICHEVER OCCURS "I"

NO.	DESCRIPTION	MILES X 1000	10	20	30	40	50	60
		MONTHS	12	24	36	48	60	72
	ENGINE CONTROL SYSTEM MAINTENANCE							
10	SPARK PLUGS (NICKEL COATED)		See Note (3)					
	SPARK PLUGS (PLATINUM COATED)		See Note (4)					
	SPARK PLUGS (IRIDIUM COATED)		See Note (5)					
11	VALVE CLEARENCE (2.0L)		See Note (6)					
12	FUEL TANK AIR FILTER		I	I	R	I	I	R

NOTE : (3) FOR EVERY 25,000 MILES: "R"
(4) FOR EVERY 60,000 MILES: "R"
(5) FOR EVERY 100,000 MILES: "R"
(6) FOR EVERY 60,000 MILES OR 48 MONTHS, WHICHEVER OCCURS FIRST : "I"

F030C05GK-EAT

R : Replace I : Inspect and, after inspection, clean, adjust, repair or replace if necessary

NO.	DESCRIPTION	MILES X 1000	10	20	30	40	50	60
		MONTHS	12	24	36	48	60	72
	GENERAL MAINTENANCE							
1	COOLING SYSTEM		I	I	I	I	I	I
2	COOLANT		See Note (1)					
3	COOLANT SPECIFIC GRAVITY		I	I	I	I	I	I
4	MANUAL TRANSAXLE OIL		I	I	I	I	I	I
5	AUTOMATIC TRANSAXLE FLUID		I	I	I	I	I	R
6	BRAKE PIPES, HOSES, AND CONNECTIONS		I	I	I	I	I	I
7	BRAKE FLUID		I	R	I	R	I	R
8	CLUTCH FLUID		I	R	I	R	I	R
9	REAR BRAKE LININGS AND CYLINDERS			I		I		I
10	BRAKE PADS		I	I	I	I	I	I
11	SUSPENSION AND STEERING SYSTEM		I	I	I	I	I	I
12	FRONT SUSPENSION BALL JOINTS		I	I	I	I	I	I
13	CLIMATE CONTROL AIR FILTER (IN FRONT OF BLOWER UNIT)		R	R	R	R	R	R
14	REAR WHEEL BEARINGS		I	I	I	I	I	I
15	TYRE CONDITION AND PRESSURE (incl. Spare)		I	I	I	I	I	I
16	LUBRICATE LOCKS AND HINGES		I	I	I	I	I	I
17	CHECK ALL ELECTRICAL SYSTEMS		I	I	I	I	I	I
18	ROAD TEST		I	I	I	I	I	I
19	CHECK ALL SYSTEMS WITH HI-SCAN		I	I	I	I	I	I
20	CHECK 4 GAS		I	I	I	I	I	I
21	DRIVE SHAFT & BOOT		I	I	I	I	I	I

NOTE : (1) FOR THE FIRST TIME, REPLACE THE COOLANT AT 60,000 MILES OR 60 MONTHS.
AFTER THAT, REPLACE IT EVERY 30,000 MILES OR 24 MONTHS.

MAINTENANCE UNDER SEVERE USAGE CONDITIONS

F040A04GK-EAT

The following items must be serviced more frequently on cars normally used under severe driving conditions. Refer to the chart below for the appropriate maintenance intervals.

R : Replace I : Inspect and, after inspection, clean, adjust, repair or replace if necessary

MAINTENANCE ITEM		MAINTENANCE OPERATION	MAINTENANCE INTERVALS	DRIVING CONDITION
ENGINE OIL AND FILTER		R	EVERY 4,500 MILES OR 6 MONTHS	A, B, C, D, E, F, G, H, I, K
AIR CLEANER FILTER		R	MORE FREQUENTLY	C, E
SPARK PLUGS		R	MORE FREQUENTLY	B, H
TIMING BELT	2.7L	R	EVERY 37,000 MILES OR 48 MONTHS	D, E, F, G
	2.0L	R	EVERY 60,000 MILES OR 48 MONTHS	B, D, E, F, G
BRAKE PADS, CALIPERS AND ROTORS		I	MORE FREQUENTLY	C, D, G, H
REAR BRAKE DRUMS/LININGS, PARKING BRAKE		I	MORE FREQUENTLY	C, D, G, H
STEERING GEAR BOX, LINKAGE & BOOTS/ LOWER ARM BALL JOINT		I	MORE FREQUENTLY	C, D, E, F
DRIVE SHAFTS & BOOTS		I	EVERY 9,000 MILES OR 12 MONTHS	C, D, E, F, G
MANUAL TRANSAXLE OIL		R	EVERY 60,000 MILES	A, C, D, E, F, G, H, I, J
AUTOMATIC TRANSAXLE FLUID		R	EVERY 27,000 MILES	A, C, E, F, G, H, I
CLIMATE CONTROL AIR FILTER (IN FRONT OF BLOWER UNIT)		R	MORE FREQUENTLY	C, E

SEVERE DRIVING CONDITIONS

A - Repeatedly driving short distance of less than 5miles(8km) in normal temperature or less than 10miles(16km) in freezing temperature
B - Extensive engine idling or low speed driving for long distances
C - Driving on rough, dusty, muddy, unpaved, graveled or salt-spread roads
D - Driving in areas using salt or other corrosive materials or in very cold weather
E - Driving in sandy areas
F - Driving in heavy traffic area over 32°C (90°F)
G - Driving on uphill, downhill, or mountain road
H - Towing a Trailer, or using a camper, or roof rack
I - Driving as a patrol car, taxi, other commercial use or vehicle towing
J - Driving over 100 MPH(170 Km/h)
K - Frequently driving in stop-and-go conditions

6ZF060M1-A

o Engine oil and filter

The engine oil and filter should be changed at the intervals specified in the maintenance schedule. If the car is being driven in severe conditions, more frequent oil and filter changes are required.

6ZF060B2-A

o Drive belts

Inspect all drive belts for evidence of cuts, cracks, excessive wear or oil saturation and replace if necessary. Drive belts should be checked periodically for proper tension and adjusted as necessary.

F060C01A-AAT

o Fuel filter

A clogged filter can limit the speed at which the vehicle may be driven, damage the emission system and cause hard starting. If an excessive amount of foreign matter accumulates in the fuel tank, the filter may require replacement more frequently.
After installing a new filter, run the engine for several minutes, and check for leaks at the connections. Fuel filters should be installed by trained technicians.

6ZF060D1-A

o Fuel lines, fuel hoses and connections

Check the fuel lines, fuel hoses and connections for leakage and damage. Have a trained technician replace any damaged or leaking parts immediately.

6ZF060E1-A

o Timing belt

Inspect all parts related to the timing belt for damage and deformation. Replace any damaged parts immediately.

6ZF060G1-E

o Vapour hose and fuel filler cap

The vapour hose and fuel filler cap should be inspected at those intervals specified in the maintenance schedule. Make sure that a new vapour hose or fuel filler cap is correctly replaced.

6ZF060F2-A

o Crankcase ventilation hoses

Inspect the surface of hoses for evidence of heat and/or mechanical damage. Hard and brittle rubber, cracking, tears, cuts, abrasions, and excessive swelling indicate deterioration. Particular attention should be paid to examining those hose surfaces nearest to high heat sources, such as the exhaust manifold.
Inspect the hose routing to assure that the hoses do not come in contact with any heat source, sharp edges or moving component which might cause heat damage or mechanical wear. Inspect all hose connections, such as clamps and couplings, to make sure they are secure, and that no leaks are present. Hoses should be replaced immediately if there is any evidence of deterioration or damage.

6ZF060H1-A

o Air cleaner filter

A Genuine Hyundai air cleaner filter is recommended when the filter is replaced.

6ZF060J1-A

o Spark plugs

Make sure to install new spark plugs of the correct heat range.

F060N02E-AAT

o Valve clearance

Inspect excessive valve noise and/or engine vibration and adjust if necessary. A qualified technician should perform the operation.

6ZF070B1-A

o Cooling system

Check the cooling system part, such as radiator, coolant reservoir, hoses and connections for leakage and damage. Replace any damaged parts.

6ZF070C1-A

o Coolant

The coolant should be changed at the intervals specified in the maintenance schedule.

6ZF070D1-A

o Manual transaxle oil

Inspect the manual transaxle oil according to the maintenance schedule.

NOTE:
If the oil level is low, check for possible leaks before adding oil. Do not overfill.

F070E05A-EAT

o Automatic Transaxle Fluid

The fluid level should be in the "HOT" range of the dipstick, after the engine and transaxle are at normal operating temperature. Check the automatic transaxle fluid level with the engine running and the transaxle in neutral, with the parking brake properly applied. Use Hyundai Genuine ATF SP-III, DIAMOND ATF SP-III, SK ATF SP-III or other brands approved by Hyundai Motor Co., when adding or changing fluid.
Refer to the chapter 6.

6ZF070F1-A

o Brake hoses and lines

Visually check for proper installation, chafing, cracks, deterioration and any leakage. Replace any deteriorated or damaged parts immediately.

A6ZF070G2-A

o Brake fluid & Clutch fluid

Check brake fluid level in the brake fluid reservoir. The level should be between "MIN" and "MAX" marks on the side of the reservoir. Use only hydraulic brake fluid conforming to DOT 3 or DOT 4.

6ZF070H1-A

o Rear brake drums and linings/ parking brake

Check the rear brake drums and linings for scoring, burning, leaking fluid, broken parts, and excessive wear. Inspect the parking brake system including the parking brake lever and cables. For detailed service procedures, refer to the Shop Manual.

6ZF070J1-A

o Brake pads, calipers and rotors

Check the pads for excessive wear, discs for run out and wear, and calipers for fluid leakage.

6ZF070K1-E

o Exhaust pipe and silencer

Visually inspect the exhaust pipes, silencer and hangers for cracks, deterioration, or damage. Start the engine and listen carefully for any exhaust gas leakage. Tighten connections or replace parts as necessary.

6ZF070L1-A

o Suspension mounting bolts

Check the suspension connections for looseness or damage. Retighten to the specified torque.

6ZF070M1-A

o Steering gear box, linkage & boots/lower arm ball joint

With the vehicle stopped and engine off, check for excessive freeplay in the steering wheel.
Check the linkage for bends or damage. Check the dust boots and ball joints for deterioration, cracks, or damage. Replace any damaged parts.

6ZF070N1-A

o Power steering pump, belt and hoses

Check the power steering pump and hoses for leakage and damage. Replace any damaged or leaking parts immediately. Inspect the power steering belt for evidence of cuts, cracks, excessive wear, oil contamination and proper tension. Replace or adjust it if necessary.

6ZF070P1-A

o Drive shafts and boots

Check the drive shafts, boots and clamps for cracks, deterioration, or damage. Replace any damaged parts and, if necessary, repack the grease.

6ZF070Q1-A

o Air conditioning refrigerant

Check the air conditioning lines and connections for leakage and damage. Check air conditioning performance according to the relevant shop manual if necessary.

OWNER MAINTENANCE

Engine Compartment 6-2
Daily Operating Checks 6-5
Maintenance Precautions 6-5
Engine Oil 6-6
Engine Coolant Checking and Replacing 6-9
Changing the Air Cleaner Filter 6-11
Manual Transaxle Lubricant 6-14
Automatic Transaxle Fluid 6-14
Brake System Checking 6-16
Checking the Clutch Fluid 6-17
Air Conditioning System Maintenance 6-17
Changing the Climate Control Air Filter 6-18
Fusible Links 6-20
Battery Maintenance 6-21
Electric Cooling Fans 6-23
Power Steering Fluid Level 6-23
Headlight Aiming Adjustment 6-24
Replacing Light Bulbs 6-25
Bulb Wattage 6-33
Fuse Panel Description 6-34

6

ENGINE COMPARTMENT

G010A01GK-EAT

(1.6L)

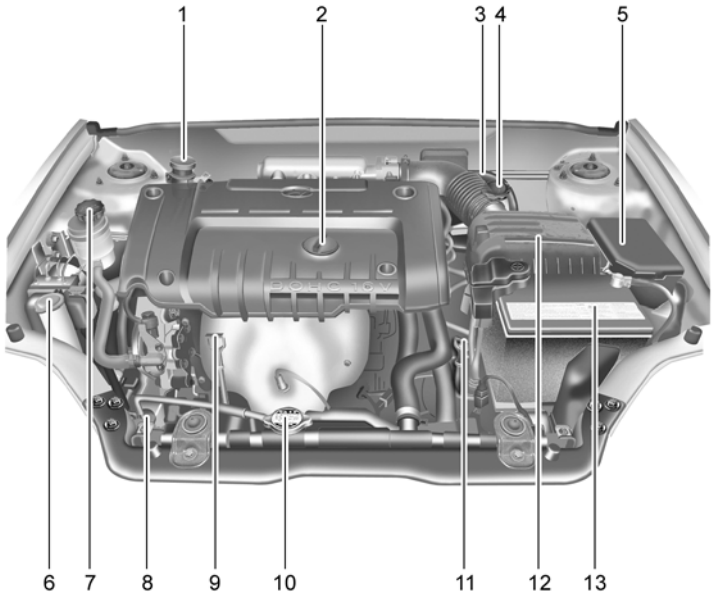

HGK5003-E

CAUTION:
When inspecting or servicing the engine, you should handle tools and other heavy objects carefully so that the plastic rocker cover of the engine is not damaged.

1. Clutch fluid reservoir (Not all models)
2. Engine oil filler cap
3. Brake booster
4. Brake fluid reservoir
5. Relay box
6. Windscreen washer fluid reservoir cap
7. Power steering fluid reservoir
8. Engine coolant reservoir
9. Engine oil level dipstick
10. Radiator cap
11. Automatic transaxle fluid level dipstick (Not all models)
12. Air cleaner
13. Battery

G010B01GK-EAT

(2.0L)

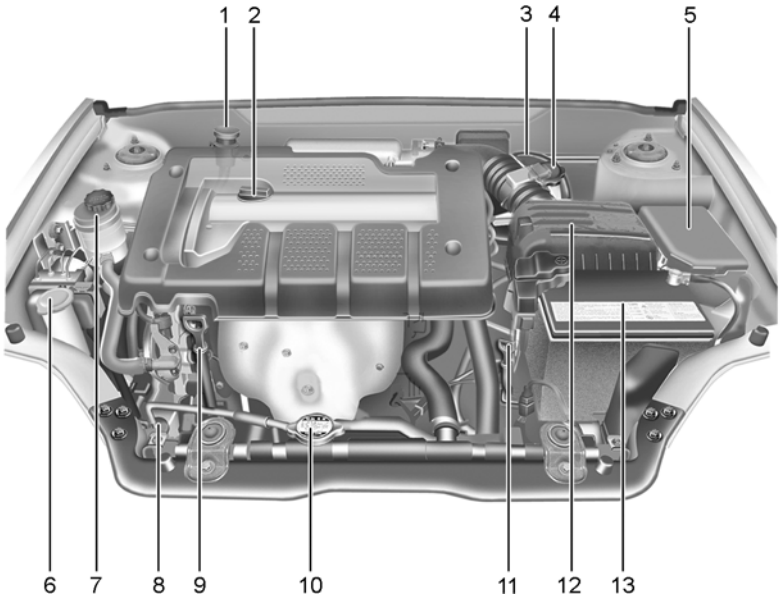

HGK5002-E

CAUTION:
When inspecting or servicing the engine, you should handle tools and other heavy objects carefully so that the plastic rocker cover of the engine is not damaged.

1. Clutch fluid reservoir (Not all models)
2. Engine oil filler cap
3. Brake booster
4. Brake fluid reservoir
5. Relay box
6. Windscreen washer fluid reservoir cap
7. Power steering fluid reservoir
8. Engine coolant reservoir
9. Engine oil level dipstick
10. Radiator cap
11. Automatic transaxle fluid level dipstick (Not all models)
12. Air cleaner
13. Battery

G010C01GK-EAT

(2.7L)

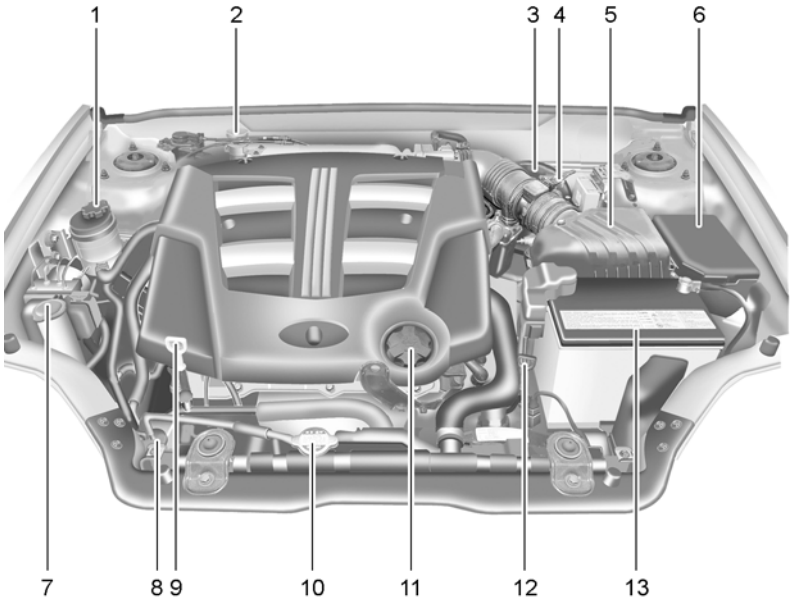

HGK5001-E

CAUTION:
When inspecting or servicing the engine, you should handle tools and other heavy objects carefully so that the plastic rocker cover of the engine is not damaged.

1. Power steering fluid reservoir
2. Clutch fluid reservoir (Not all models)
3. Brake booster
4. Brake fluid reservoir
5. Air cleaner
6. Relay box
7. Windscreen washer fluid reservoir cap
8. Engine coolant reservoir
9. Engine oil level dipstick
10. Radiator cap
11. Engine oil filler cap
12. Automatic transaxle fluid level dipstick (Not all medels)
13. Battery

DAILY OPERATING CHECKS

SG020B1-E

The following items should be checked on a daily basis or whenever the vehicle is refuelled, whichever occurs sooner.

- o Engine oil level.
- o Engine coolant level.
- o Power steering fluid level.
- o Brake fluid level.
- o Windscreen washer fluid level.
- o Battery condition.
- o Tyre condition and pressures.
- o Operation and cleanliness of all lighting equipment.
- o Windscreen wiper and washer operation.
- o Horn operation.
- o Warning lamp operation.
- o Adjustment and cleanliness of mirrors.
- o Seat and seat belt adjustment and operation.
- o Fluid leakage.

The vehicle must not be driven if the daily operating checks indicate that any item of equipment related to the safety or roadworthiness of the vehicle is not functioning correctly.

MAINTENANCE PRECAUTIONS

G020D01TG-EAT

Improper or incomplete service may result in problems. This section gives instructions only for the maintenance items that are easy to perform.
Several procedures should be done by Hyundai authorised repairer.

NOTE:

Improper owner maintenance during the warranty period may affect warranty coverage.

WARNING:

- o **Performing maintenance work on a vehicle can be dangerous. You can be seriously injured whilst performing some maintenance procedures. If you lack sufficient knowledge and experience or the proper tools and equipment to do the work, have it done by Hyundai authorised repairer.**
- o **Working under the bonnet with the engine running is dangerous. It becomes even more dangerous when you wear jewellery or loose clothing. These can become entangled in moving parts and result in injury. Therefore, if you must run the engine whilst working under the bonnet, make certain that you remove all jewellery (especially rings, bracelets, watches, and necklaces) and all neckties, scarves, and similar loose clothing before getting near the engine or cooling fans.**

ENGINE OIL

SG030A1-E

The correct engine oil level is of paramount importance. An excessively high or low oil level may result in irreparable damage being sustained by the engine. The engine oil level must be checked on a daily basis or whenever the vehicle is refuelled, whichever occurs sooner.
In addition, it is imperative that only an approved grade and specification of oil is used to avoid the possibility of serious engine damage and premature wear. The use of "budget price" oil is a false economy that must be avoided if the maximum reliability and useful life is to be obtained from the vehicle.

G030B02O-EAT

Recommended Oil

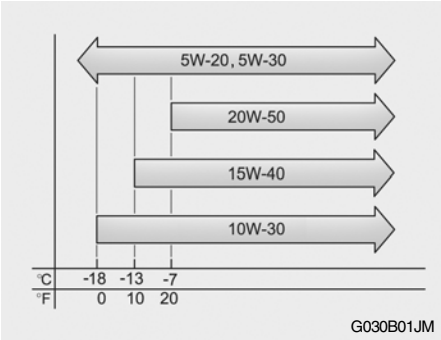

The engine oil quality should meet the following classification.

API SJ, SL or ABOVE,
ILSAC GF-3 or ABOVE

The oil viscosity should be selected according to the operating environment of the engine by means of the table shown above. The engine oil recommendations are complete in themselves and the use of additives is neither required nor recommended. The use of engine oil additives may result in invalidation of the vehicle warranty.

NOTE:

- **SAE 5W-20 (5W-30), ILSAC GF-3 engine oil is preferred regardless of regional option and engine variation.**
- **If SAE 5W-20, ILSAC GF-3 engine oil is not available, secondary recommended engine oil for corresponding temperature range can be used.**

JMG030C2-E

Engine Oil Level

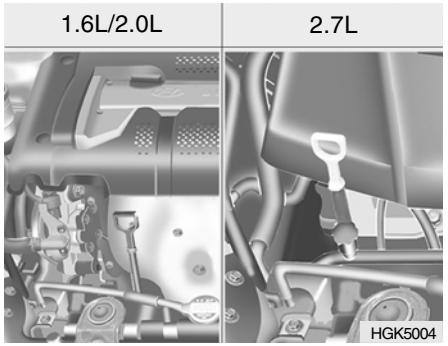

The engine oil level should be checked with the engine at normal operating temperature and the vehicle parked upon level ground.
Prior to checking the level, the vehicle should be allowed to stand for several minutes after the engine has been switched off to allow the oil to drain back to the sump.
Withdraw the dipstick and wipe it with a clean rag. Replace the dipstick fully and withdraw again when the oil level may be read from the dipstick.

Normal oil level is indicated when the oil is present between the two marks on the dipstick. It is not necessary to add oil if the level is above the lower mark and in any case, oil must not be added to the degree that the level exceeds the upper mark. Replace the dipstick fully after checking the level.

WARNING:
Be very careful not to touch the radiator hose when checking the engine oil as it may be hot enough to burn you.

SG030D2-E

Engine Oil Replenishment

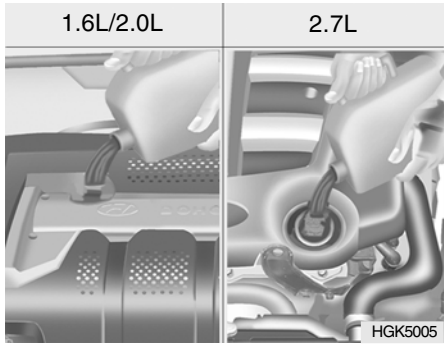

If the indicated oil level is at or below the lower mark of the dipstick, oil should be added until the level is at or below the upper mark.
To add oil to the engine, remove the filler cap by rotating in an counter-clockwise direction and pour engine oil into the engine. Before checking the level again, allow several minutes for the oil to drain into the sump. Replace the oil filler cap rotating it in a clockwise direction until tight.
The quantity of oil required to raise the level from the minimum to maximum level is approximately 1 litre.

WARNING:
Be very careful not to touch the radiator hose when adding the engine oil as it may be hot enough to burn you.

G350A01A-EAT

ENGINE OIL CONSUMPTION

Function of engine oil

Engine oil has the primary function of lubricating and cooling the inside of the engine.

Engine oil consumption

It is normal that an engine should consume some engine oil in the course of normal driving. The cause of oil consumption in a normal engine are as follows;

- o Engine oil is used to lubricate pistons, piston rings and cylinders.
  A thin film of oil is left on the cylinder wall when a piston moves downwards in the cylinder. High negative pressure generated during engine operation sucks some of the oil into the combustion chamber.
  This oil with some oil of the cylinder wall is burned by the high temperature combustion gases during the combustion process.
- o The engine oil consumption is strongly effected by the viscosity and quality of oil, engine rpm and driving condition etc.
  More engine oil may be consumed under severe driving conditions such as high speeds, frequent acceleration and deceleration, compared to normal driving.

ENGINE COOLANT CHECKING AND REPLACING

SG050A1-E

WARNING:
Do not remove the radiator cap when the engine is hot, since the system is pressurised and coolant may be ejected from the radiator resulting in scalding.

SG050B1-E

Coolant recommendations

Only ethylene glycol based coolant with a corrosion inhibitor suited to aluminium alloy engine components should be used in the cooling system. No further additives or inhibitors should be used. The coolant specific gravity should be checked as prescribed in the maintenance schedule to ensure adequate frost and corrosion protection. In addition, the engine coolant must be replaced at the specified interval since the corrosion inhibitor properties deteriorate with time.

It is important to note that whilst an increase in the concentration of anti freeze gives an increase in the level of frost protection, a solution which is in excess of 65% anti freeze will result in reduced frost protection and engine overheating. Therefore the recommended concentration of 50% should not be exceeded for general use.

The use of methanol based anti freeze compounds may result in engine overheating and will invalidate the vehicle warranty.

NOTE:
It is imperative that vehicles fitted with an air conditioning system have a coolant concentration of the recommended strength at all times. The use of the air conditioning system when the cooling system is filled with water only will result in the heater matrix freezing and subsequently bursting.

SG050C1-E

Engine Coolant Level

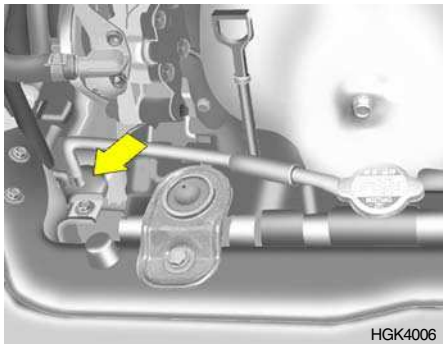

The engine coolant level may be observed through the side of the plastic coolant reservoir (expansion tank) when the engine is cold. If the level is below the "L" mark, add coolant of the correct concentration until the level is between the "L" and "F" marks. If the level falls below the "L" mark on a regular basis despite being topped up, consult a Hyundai authorised repairer.

SG050D1-E

To Change the Engine Coolant

The engine coolant should be changed at those intervals specified in the vehicle maintenance schedule in Section 5.

CAUTION:
Care should be taken to ensure that coolant is not allowed to spill onto the paintwork since the finish may become damaged. If coolant spillage occurs, the affected area should be rinsed thoroughly with water.

1. Park the vehicle on level ground and ensure that the parking brake is firmly applied, and the engine allowed to cool.
   DO NOT ATTEMPT THIS OPERATION WHILST THE ENGINE IS HOT SINCE BURNING OR SCALDING MAY RESULT.
2. Prepare a suitable receptacle to collect the displaced coolant and position this under the radiator drain tap.

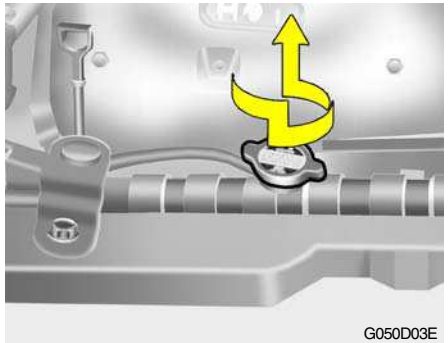

3. With the heater temperature control set to the "HOT" position, remove the radiator cap and open the radiator drain tap.
4. When the engine coolant has drained completely, close the drain tap ensuring that this is not over tightened.

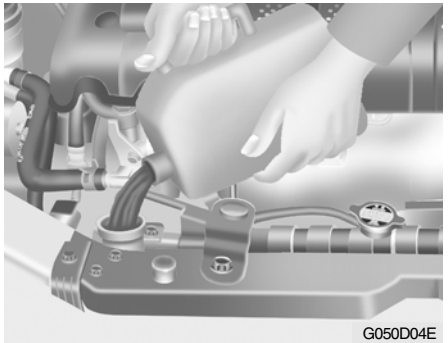
G050D04E

5. Prepare a suitable quantity of new engine coolant (refer to section 9) and pour this into the radiator.
6. Start the engine with the radiator cap still removed and continue to add coolant as the level decreases as air is expelled from the system. When the level remains constant, replace the radiator cap and replenish the coolant reservoir.
7. When the engine is hot, check to ensure that no coolant leaks are present.

WARNING:
The cooling fan is controlled by engine coolant temperature and may sometimes operate even when the engine is not running. Use extreme caution when working near the blades of the cooling fan so that you are not injured by a rotating fan blade. As the engine coolant temperature decreases, the fan will automatically shut off. This is a normal condition.

CHANGING THE AIR CLEANER FILTER

G070A01E-AAT

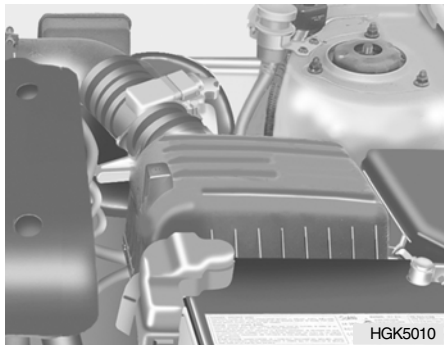
HGK5010

To change the filter, unsnap the clips around the cover. When this is done, the cover can be lifted off, the old filter removed and the new filter put in its place. Genuine Hyundai Replacement Parts are recommended.

CAUTION:
- **Operating your vehicle without a proper air cleaner filter in place can result in excessive engine wear.**
- **When removing the air cleaner filter, be careful that dust or dirt does not enter the air intake. These may result in damage to the air cleaner filter.**

WINDSCREEN WIPER BLADES

SG080A3-E

The wiper blades should be carefully inspected from time to time and cleaned to remove accumulations of road film or other debris. To clean the wiper blades and arms, use a clean sponge or cloth with a mild soap or detergent and water. If the wipers continue to streak or smear the glass, replace them with genuine Hyundai replacement.

NOTE:

It is also important to ensure that the windscreen is regularly cleaned/ degreased using a proprietary glass cleaner.

CAUTION:

- **Do not operate the wipers on dry glass since rapid wear and damage to the windscreen glass may result.**
- **Keep the blade rubber out of contact with petroleum products such as engine oil, petrol etc.**
- **When the wiper blade is freezed in winter or the washer fluid reservoir is empty, the wiper may not operate for ten minutes. This isn't a mechanical trouble but the function protecting the wiper by operating circuit breaker inside of the wiper motor.**

G080B01GK-GAT

Replacing the Wiper Blades

To remove the wiper blade

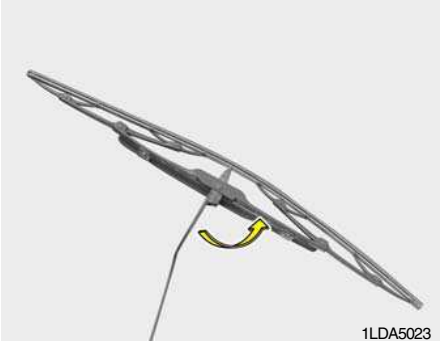

1. Raise the wiper arm and turn the wiper blade assembly to expose the plastic locking clip.

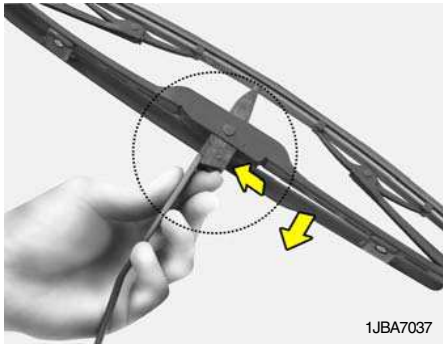

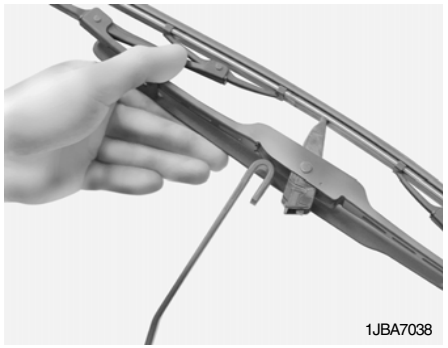

2. Compress the clip and slide the blade assembly downward.
3. Lift it off the arm.

To install the wiper blade

Install the blade assembly in the reverse order of removal.

WINDSCREEN WASHER RESERVOIR REPLENISHMENT

SG090A3-E

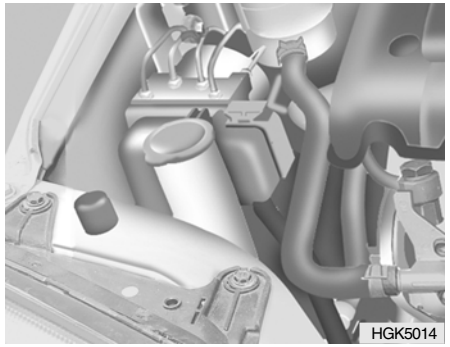

The level of windscreen washer fluid available should be checked on a daily basis. The level of fluid will be visible through the side of the reservoir. When the fluid is to be replenished, only a proprietary screen wash additive should be used and in the concentration recommended by the manufacturer. The windscreen washer reservoir has a total capacity of 3 litres.

CAUTION:

Engine coolant anti freeze must not be used in the windscreen washer system since damage to the paintwork may result.
Undiluted windscreen washer additive must not be allowed to come into contact with the paintwork. If spillage occurs, flush the affected area immediately with water. Do not operate the windscreen washer for more than 15 seconds continuously or when the reservoir is empty since damage to the washer pump will result.

WARNING:

- **Windscreen washer fluid agents contain some amounts of alcohol and can be flammable under certain circumstances. Do not allow sparks or flame to contact the washer fluid or the washer fluid reservoir. Damage to the vehicle or its occupants could occur.**
- **Windscreen washer fluid is poisonous to humans and animals. Do not drink windscreen washer fluid. Serious injury or death could occur.**

CHECKING THE TRANSAXLE OIL (MANUAL)

G100A01MC-EAT

Transaxle lubricant in the manual transaxle should be checked at those intervals specified in the vehicle maintenance schedule in Section 5.

WARNING:

It is always better to check the transaxle oil level when the engine is cool or cold. If the engine is hot, you should exercise great caution to avoid burning yourself on hot engine or exhaust parts.

NOTE:

It is recommended that the manual transaxle fluid should be checked by a Hyundai authorised repairer.

AUTOMATIC TRANSAXLE FLUID

G110A01MC-EAT

The automatic transaxle fluid level should be checked and changed at those intervals prescribed in the maintenance schedule. It is of paramount importance that only the specified fluid is used when replenishing or changing the fluid. The use of other fluids may irreparably damage the transaxle and invalidate the manufacturers warranty. In addition the ingress of dirt or lint may prevent correct functioning of the transaxle and care must be exercised to prevent the ingress of such matter.

NOTE:
Automatic transaxle fluid is red in colour. As driving distance increases, the fluid colour turns darkish red gradually. It is a normal condition and you should not judge the need to replace based upon the changing colour.
You must replace the automatic transaxle fluid in accordance with intervals specified in the vehicle maintenances schedule in section 5.

WARNING:
The transaxle fluid level must be checked with the engine running and at normal operating temperature and therefore care must be exercised to prevent injury occurring through contact with rotating or hot parts of the engine.

G110D03L-GAT

Checking the automatic transaxle fluid level

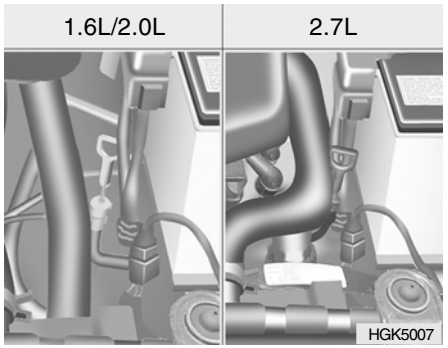

The automatic transaxle fluid level should be checked regularly.
Keep the vehicle on the level ground with the parking brake applied and check the fluid level according to the following procedure.

1. Place the selector lever in N (Neutral) position and confirm the engine is running at normal idle speed.
2. After the transaxle is warmed up sufficiently (fluid temperature 70~80°C (158~176°F)), for example by 10 minutes usual driving, shift the selector lever through all positions then place the selector lever in N (Neutral) or P (Park) position.

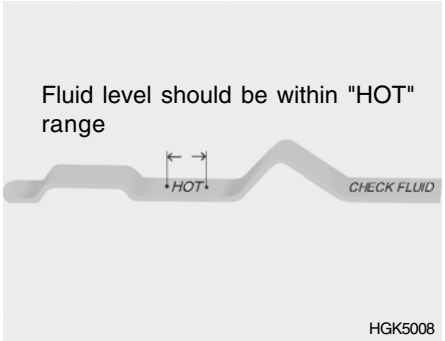

3. Confirm that the fluid level is in “HOT” range on the level gauge. If the fluid level is lower, add the specified fluid from the fill hole. If the fluid level is higher, drain the fluid from the drain hole.
4. If the fluid level is checked in cold condition (fluid temperature 20~30°C (68~86°F)) add the fluid to “COLD” line and then recheck the fluid level according to the above step 2.

WARNING:
The electric engine cooling fan automatically switches on and off according to engine temperature. Be careful to keep away from the fan during this check as it may switch on at any time.

NOTE:
Only lint free cloth should be used for wiping the dipstick. The presence of lint within the transaxle may cause problems with the normal function of the transaxle.

BRAKE SYSTEM CHECKING

SG120A1-E

CAUTION:
Correct operation of the braking system is essential to the safe operation of the vehicle and therefore, any maintenance operations other than those listed below should be entrusted to a Hyundai authorised repairer.

SG120D1-E

Brake Fluid Level

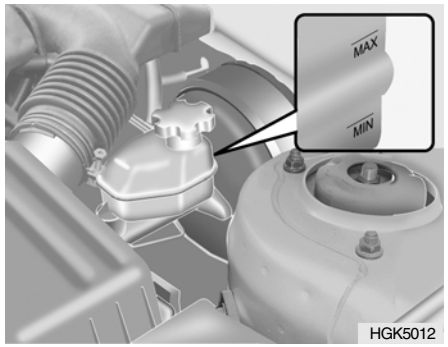

The fluid level in the brake fluid reservoir should be checked periodically. The level should be between the "MIN" and "MAX" marks on the side of the reservoir. If the level is at or below the "MIN" mark, fluid should be added having carefully cleaned the area surrounding the reservoir cap to ensure that dirt is not allowed to enter the system. It should be noted will decrease slightly as the friction linings of the pads and shoes become worn and that this is a normal condition.

WARNING:
Brake fluid is hygroscopic and should never be stored in an unsealed container. The presence of water in the braking system will cause vapour locks and increase the possibility of brake fade along with promoting corrosion within the braking system. The brake fluid must be changed at the specified time or mileage interval to ensure continued safe operation of the system. Brake fluid will cause rapid and serious damage to paintwork. If accidental spillage occurs, the affected area must be rinsed with water immediately. Do not allow brake fluid to come into contact with the eyes or to be ingested and ensure that fluid is safely stored away form the reach of children.

CHECKING THE CLUTCH FLUID

SG130A1-C

(Manual Transaxle)
To Check the Clutch Fluid

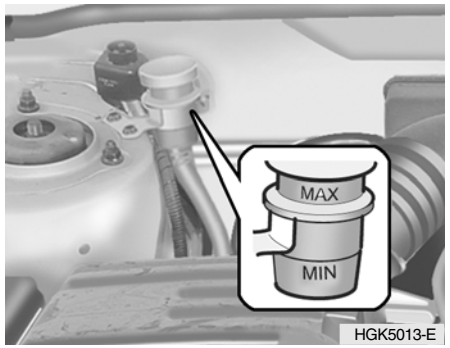

The clutch fluid level in the master cylinder should be checked when performing other under bonnet checks. The system should be checked for leakage at the same time.
Ensure that the clutch fluid level is always between the "MAX" and "MIN" level markings on the fluid reservoir. Fill as required. Fluid loss indicates a leak in the clutch system which should be inspected and repaired immediately.

AIR CONDITIONING SYSTEM MAINTENANCE

SG140A1-E

Condenser

Ensure that the condenser is periodically inspected and that accumulations of dirt, dead insects and leaves etc, are removed to ensure that the efficiency of the system is not impaired. Care must be exercised to ensure that the condenser fins are not damaged during cleaning.

SG140C2-E

Checking the Refrigerant

1. Start the engine and run at idle for several minutes with the refrigeration system running at the coldest setting.
2. If the air coming out of the in-dash vents is not cold, have the air conditioning system inspected by your Hyundai authorised repairer.

CAUTION:
Running the air conditioning system for extended periods of time with a low refrigerant level may damage the compressor.

SG140D1-E

Off Season Maintenance

The air conditioning must be run for ten minutes or so weekly during periods when the system would not normally be used to ensure that the compressor and seals are lubricated. If this precaution is not observed the compressor seals may become stuck to the compressor shaft and damaged when the system is next used resulting in a loss of refrigerant and damage to the compressor.

CHANGING THE CLIMATE CONTROL AIR FILTER

G145A03GK-EAT

(In front of blower unit) (Not all models)

The climate control air filter is located in front of the blower unit behind the glove box.
It helps to decrease the amount of pollutants entering the car.

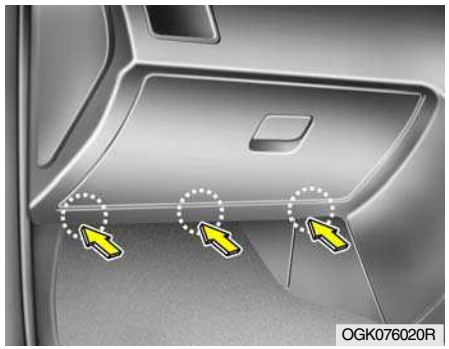

1. Remove the mounting screws on the downside of the glove box.

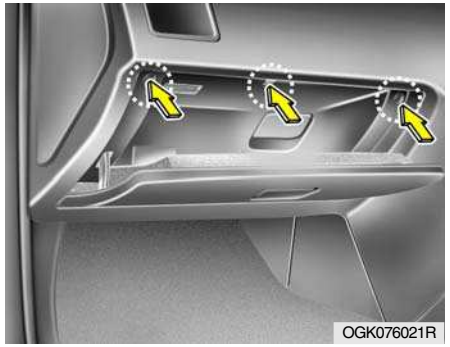

2. Open the glove box and remove the mounting screws on the upside of the glove box.

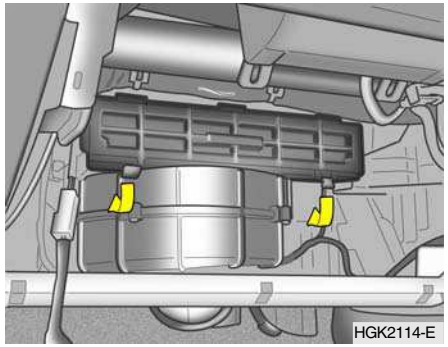

3. Remove the filter cover.

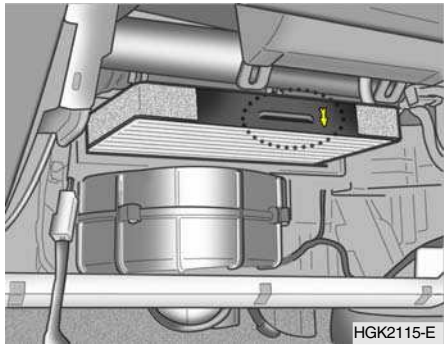

4. Replace the climate control air filter with a new one.
5. Installation is the reverse order of disassembly.

CAUTION:
Be sure to install the climate control air filter in the direction of the arrow sign. Otherwise, it may cause noise or deterioration.

FUSIBLE LINKS

SG200A1-E

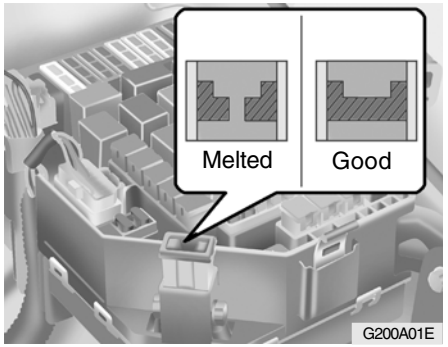

The fusible link prevents damage to the wiring harness in the event of an electrical system malfunction. Failure of a fusiblelink is indicative of a serious overload condition having occurred and therefore the electrical system should be checked by a Hyundai authorised repairer before a replacement link is fitted.

WARNING:
Under no circumstances should a fusible link be replaced with anything other than a new link of the same rating. The use of higher rated links or other means of connecting the circuit will create a potential fire hazard.

SG200B2-E

Individual Circuit Fuses

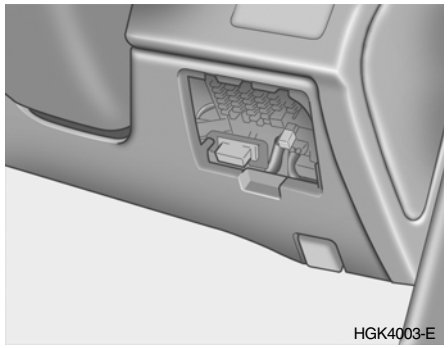

The fuse box containing the individual circuit fuses is located on the lower portion of the dashboard adjacent to the bonnet release. The fuse box cover is removed by pushing lightly and then releasing the lid. A fuse rating grid will be found on the reverse side of the cover. In the event of fuse failure, the fuse should be replaced with one of equivalent rating. A fuse removal tool is provided within the fuse box to facilitate replacement.

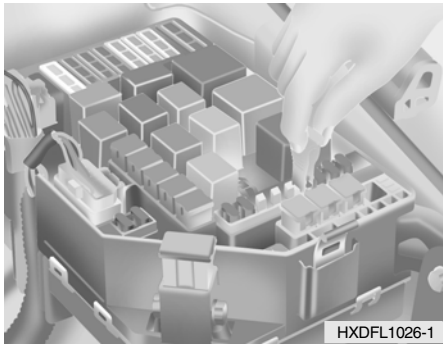

In the event of a replacement fuse failing shortly after installation a malfunction within the circuit protected by that fuse is indicated. The circuit should be checked by a Hyundai authorised repairer at the first available opportunity.

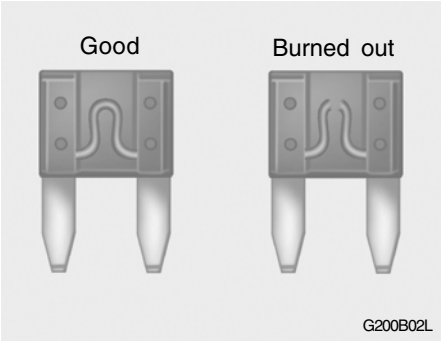

WARNING:
The use of replacement fuses having a higher rating than specified or other means of connecting the circuit will create a potential fire hazard.

NOTE:
See page 6-34 for the fuse panel descriptions.

SG210A1-E

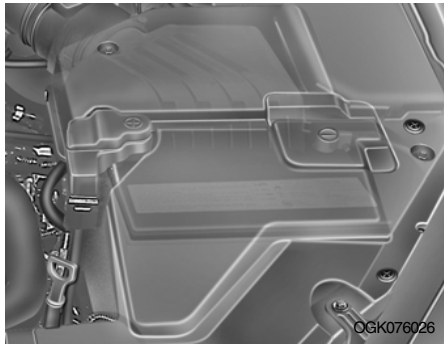

WARNING:
Motor vehicle batteries contain sulphuric acid which is corrosive and poisonous. Hydrogen gas is emitted from the battery which is explosive when combined with oxygen. The following precautions must be strictly observed to avoid personal injury or damage to the vehicle.

- o If battery electrolyte is spilled onto skin or into eyes, the effected area must be flushed with copious amounts of water and medical assistance sought.
- o If battery electrolyte is ingested, copious amounts of water or milk followed by an ant-acid (raw egg or milk of magnesia) must be drunk. Vomiting should not be induced and medical assistance must be sought.
- o Batteries must only be charged in well ventilated areas from which naked lights or sources of sparks are excluded.
- o Ensure that children, pets or other unauthorised persons are kept away from batteries.
- o Do not allow anything to bridge the positive (+) and negative (-) terminals of the battery.
- o Never invert the battery.

The battery fitted during production is of the "Maintenance Free" type.

WARNING:

Always read the following instructions carefully when handling a battery.

Keep lighted cigarettes and all other flames or sparks away from the battery.

Hydrogen, which is a highly combustible gas, is always present in battery cells and may explode if ignited.

Keep batteries out of the reach of children because batteries contain highly corrosive SULPHURIC ACID.

Do not allow battery acid to contact your skin, eyes, clothing or paint finish.

If any electrolyte gets into your eyes, flush your eyes with clean water for at least 15 minutes and get immediate medical attention. If possible, continue to apply water with a sponge or cloth until medical attention is received.

If electrolyte gets on your skin, thoroughly wash the contacted area.

If you feel a pain or a burning sensation, get medical attention immediately.

Wear eye protection when charging or working near a battery.

Always provide ventilation when working in an enclosed space.

- **o When lifting a plastic-cased battery, excessive pressure on the case may cause battery acid to leak, resulting in personal injury. Lift with a battery carrier or with your hands on opposite corners.**
- **o Never attempt to charge the battery when the battery cables are connected.**
- **o The electrical ignition system works with high voltage. Never touch these components with the engine running or the ignition switched on.**

ELECTRIC COOLING FANS

YG210A1-E

WARNING:
The cooling fan is controlled by engine coolant temperature and may sometimes operate even when the engine is not running. Do not touch the radiator fan until it is completely stopped.
As the coolant temperature decreases the fan will automatically shut off. This is a normal condition.

Checking Engine Cooling Fan

The engine cooling fan should automatically come on if the engine coolant temperature is high.

Checking Condenser Cooling Fan

The condenser cooling fan (in front of the condenser) should come on automatically whenever the air conditioner is in operation.

POWER STEERING FLUID LEVEL

G230A01GK-EAT

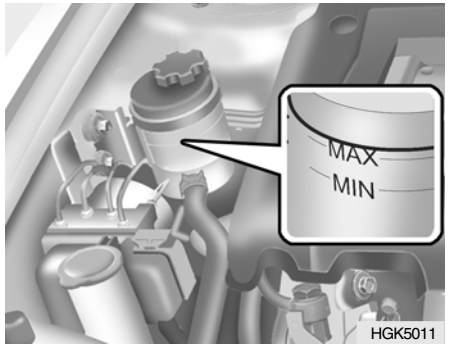

The power steering fluid level should be checked regularly.
To check the power steering fluid level, be sure the ignition is "OFF", then check to make certain that the power steering fluid level is between the "MAX" and "MIN" level markings on the fluid reservoir.

NOTE:
- **The power steering pump may be noisy when the engine is first started in the extreme cold (-20°C/ -4°F). This noise is not abnormal and will stop as the engine warms up. If the power steering pump continues to be noisy after the engine has warmed up, have it inspected by your Hyundai authorised repairer.**
- **Do not check whilst the engine is running. Do not start when power steering fluid reservoir is empty.**

YG220A1-E

Power Steering Hoses

It is suggested that you check the power steering hose connections for fluid leakage at those intervals specified in the vehicle maintenance schedule in Section 5. The power steering hoses should be replaced if there are severe surface cracking, pulling, scuffing or worn spots. Deterioration of the hoses could cause premature failure.

HEADLIGHT AIMING ADJUSTMENT

G290A02GK-EAT

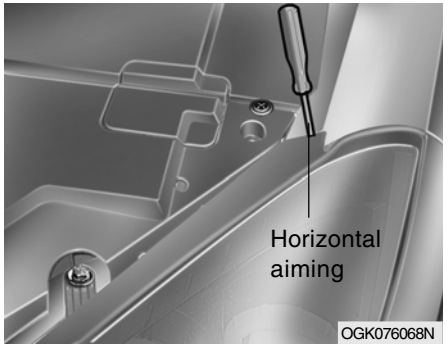

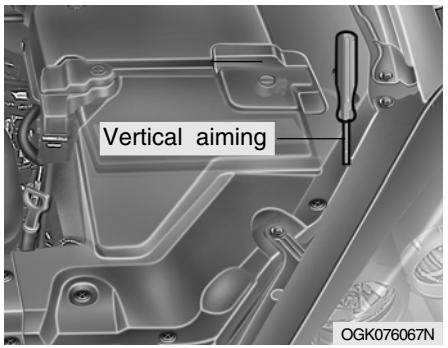

Before performing aiming adjustment, make sure of the following.

1. Keep all tyres inflated to the correct pressure.
2. Place the vehicle on level ground and press the front bumper & rear bumper down several times. Place vehicle at a distance of 118.1 in. (3m) from the test wall.
3. See that the vehicle is unloaded (except for full levels of coolant, engine oil and fuel, and spare tyre, jack, and tools).
4. Clean the head lights lens and turn on the headlight.
5. Open the bonnet.
6. Draw the vertical line (through the centre of each headlight beam pattern) and the horizontal line (through the centre of each headlight beam pattern) on the aiming screen.
   And then, draw a parallel line at 1.18 in. (30 mm) under the horizontal line.
7. Adjust each cut-off line of the low beam to the parallel line with a phillips screwdriver - VERTICAL AIMING.
8. Adjust each cut-off line of the low beam to the each vertical line with a phillips screwdriver - HORIZONTAL AIMING.

G290B01GK-EAT

Adjustment After Headlight Assembly Replacement

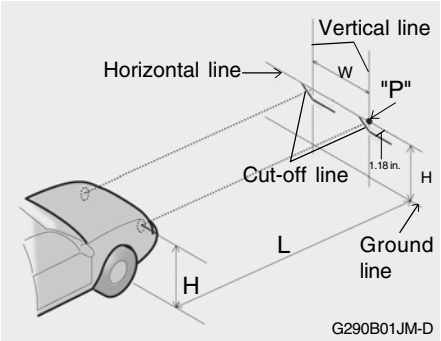

If the vehicle has had front body repair and the headlight assembly has been replaced, the headlight aiming should be checked using an aiming screen as shown in the illustration. Turn on the headlight switch.

1. Adjust headlights so that main axis of light is parallel to centre line of the body and is aligned with point "P" shown in the illustration.
2. Dotted lines in the illustration show centre of headlights.

SPECIFICATION:

"H"
Horizontal centre line of headlights from ground:
Low Beam: 27.2 in. (690 mm)
High Beam: 26.5 in. (674 mm)

"W"
Distance between each headlight centre :
Low Beam: 52.6 in. (1,336 mm)
High Beam: 43.2 in. (1,098 mm)

"L"
Distance between the headlights and the wall that the lights are tested against : 118.11 in. (3,000 mm)

G260A01MC-EAT

In the event of bulb failure being experienced, ensure that the relative lighting circuit is turned off prior to attempting to replace the bulb. The illustrations on the following page will assist in locating and removing the various bulbs. Ensure that the replacement bulb has the same cap configuration and wattage as the original.

See page 6-33 for the wattage descriptions.

CAUTION:

- **Keep the lamps out of contact with petroleum products, such as oil, petrol, etc.**
- **If you don't have necessary tools, the correct bulbs and the expertise, consult your Hyundai authorised repairer.**

G270A01GK-EAT

Headlight and Front Turn Signal Light

1. Allow the bulb to cool. Wear eye protection.
2. Open the engine bonnet.
3. Always grasp the bulb by its plastic base, avoid touching the glass.

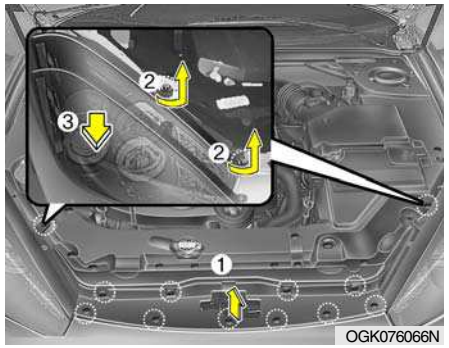

OGK076066N

4. Disconnect the power cord from the bulb base in the back of the headlight.

5. Turn the plastic cover counterclockwise and remove it.

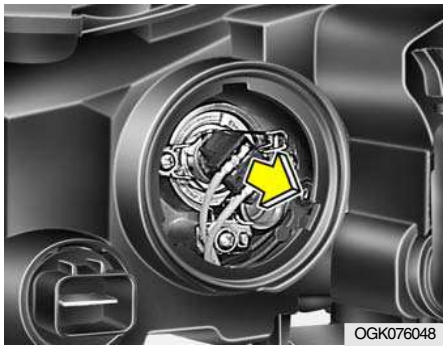

6. Disconnect the connector from the bulb base in the back of the headlight.

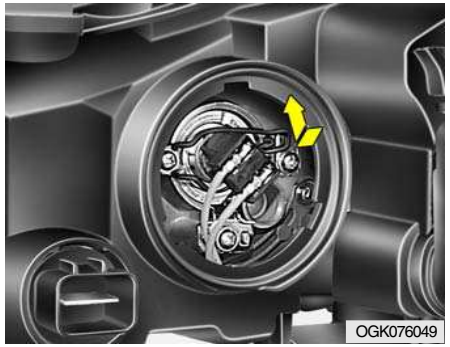

7. Push the bulb spring to remove the headlight bulb.

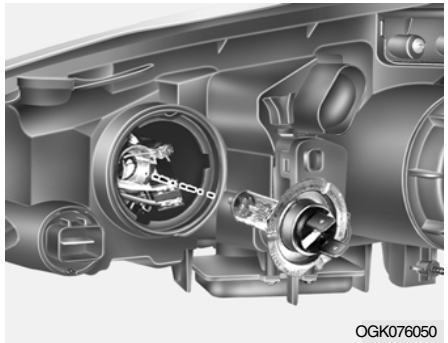

8. Remove the protective cap from the replacement bulb and install the new bulb by matching the plastic base with the headlight hole. Reattach the bulb spring and reconnect the connector.
9. Use the protective cap and carton to promptly dispose of the old bulb.
10. Check for proper headlight aim.

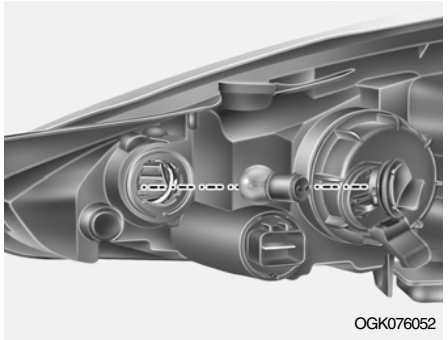

11. To replace the front turn signal light bulb, remove from the bulb holder and install the new bulb.

WARNING:
Halogen bulbs contains gas under pressure and if impacted could shatter, resulting in flying fragments. Always wear eye protection when servicing the bulb. Protect the bulb against abrasions or scratches and against liquids when lighted. Turn the bulb on only when installing in a headlight. Replace the headlight if damaged or cracked. Keep the bulb out of the reach of children and dispose of the used bulb with care.

G270K01CM-EAT

Front Fog Light

NOTE:
It is recommended that the front fog light bulb be replaced by a Hyundai authorised repairer.

G270B01GK-EAT

Rear Combination Light (Without woofer speaker)

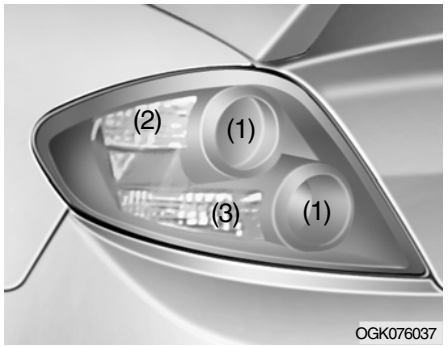

1. Open the hatchback door.

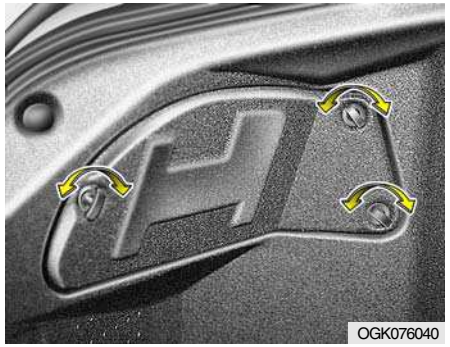

2. To remove the cover of the rear luggage trim, turn the knob by hand to the counterclockwise.

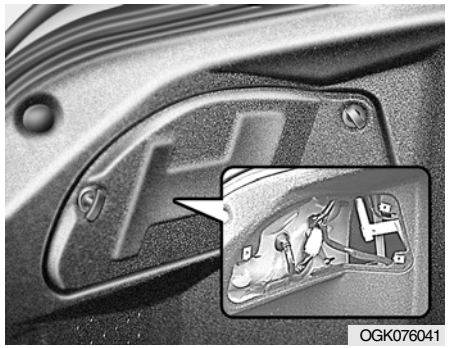

3. Remove the nut (8mm) with a spanner.

4. To detach the rear combination light hit it strongly by hand.
5. To replace the rear combination light (stop/tail light, turn signal light, back-up light), take it out from the bulb holder by turning it counterclockwise.

   (1) Stop/Tail light
   (2) Back-up light
   (3) Turn signal light

6. Install the new bulb.

G275B01GK-EAT

Rear Combination Light (With woofer speaker)

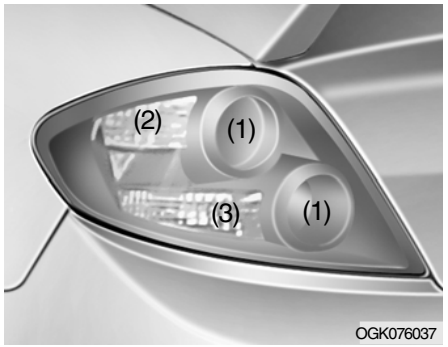

1. Open the hatchback door.

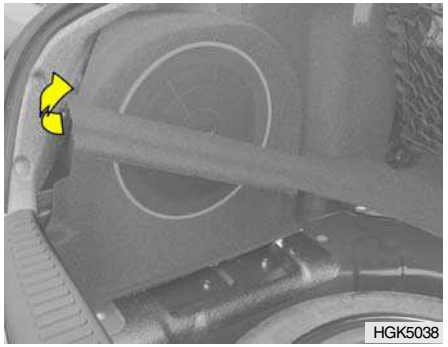

2. Take off the luggage board.

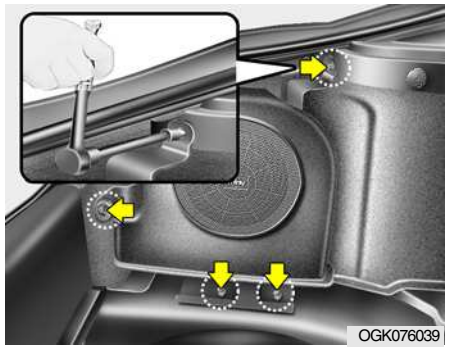

3. Extract the mounting screws (10mm) around the woofer speaker with a spanner.
4. Disconnect the power cord from the woofer speaker.

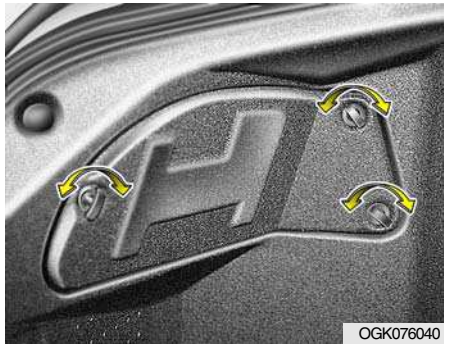

5. To remove the cover of the rear luggage trim, turn the knob by hand to the counterclockwise.

6. Remove the nut (8mm) with a wrench.

7. To detach the rear combination light hit it strongly by hand.
8. To replace the rear combination light (stop/tail light, turn signal light, back-up light), take it out from the bulb holder by turning it counterclockwise.

   (1) Stop/Tail light
   (2) Back-up light
   (3) Turn signal light

9. Install the new bulb.

G270F02A-EAT

Rear Fog Light

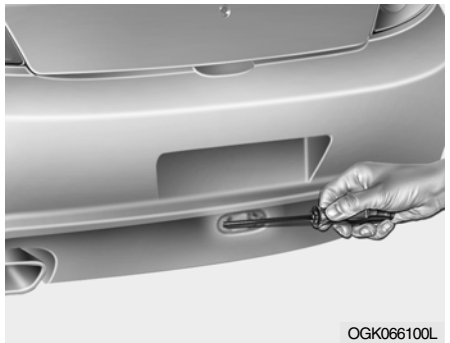

1. Remove the mounting screws of the rear fog light cover with a phillips screwdriver.
2. Disconnect the bulb holder by turning the bulb holder counterclockwise and take the bulb out from the bulb holder by turning it clockwise.
3. Replace with a new bulb.

G270C01GK-EAT

Luggage Compartment Light

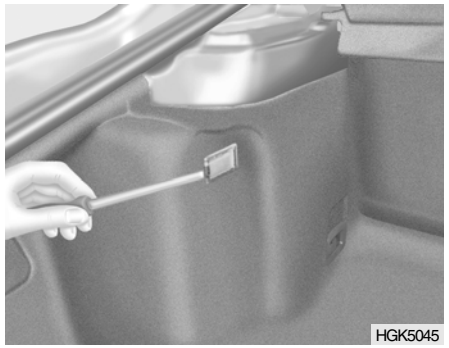

1. Open the hatchback door.
2. Remove the cover with a flat-blade screwdriver.

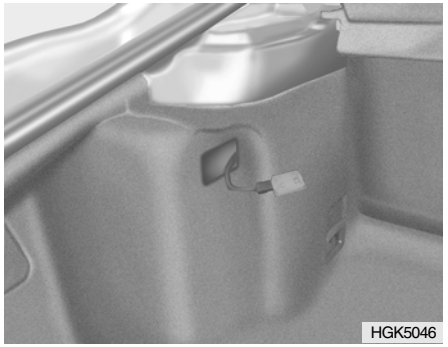

3. Disconnect the power cord.

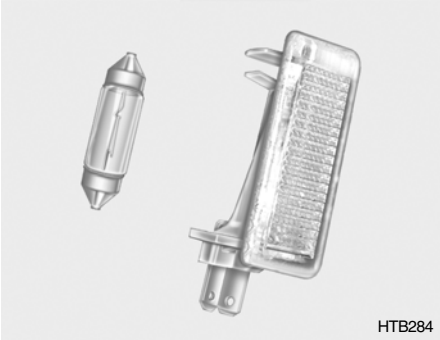

4. Replace with a new bulb.

G270G01GK-AAT

Map Light

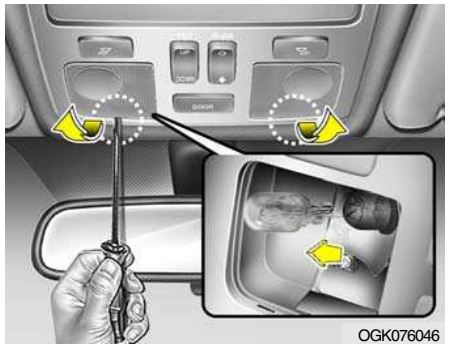

1. Remove the cover with a flat-blade screwdriver.
2. Replace with a new bulb.

G270H01GK-GAT

Glove Box Illuminated Light

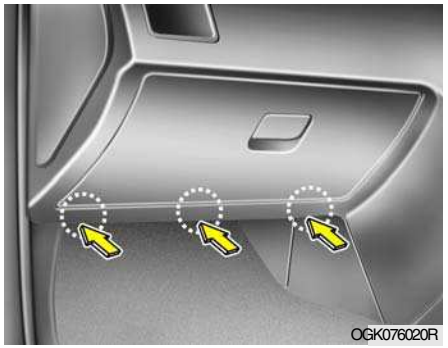

1. Remove the mounting screws on the downside of the glove box.

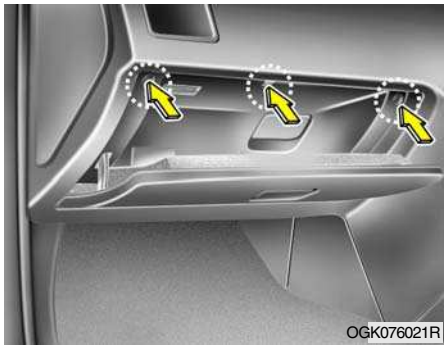

2. Open the glove box and remove the mounting screws on the upside of the glove box.

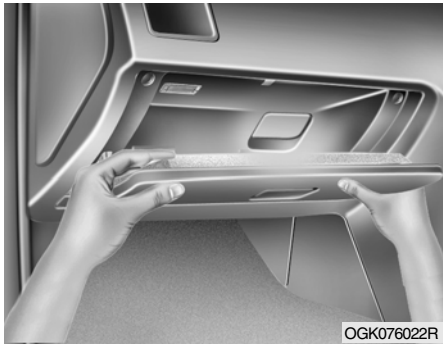

3. Remove the glove box by pulling strongly.

CAUTION:
Be careful not to damage the glove box when pulling the glove box.

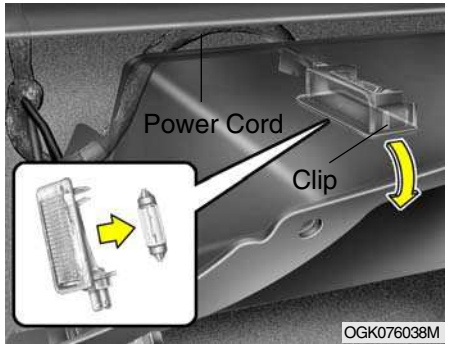

4. Disconnect the power cord.
5. Remove the glove box illuminated light by pushing the clip.
6. Replace with a new bulb.

G270E02A-EAT

Side Repeater

NOTE:
It is recommended that the side repeater bulb be replaced by a Hyundai authorised repairer.

BULB WATTAGE

G280A04GK-EAT

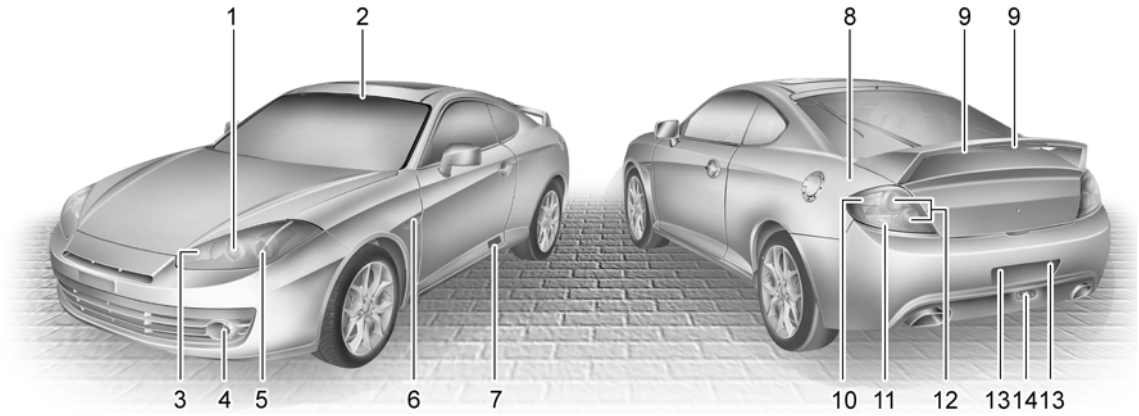

OGK066009L

No.	Part Name	Wattage	Socket type	No.	Part Name		Wattage	Socket type
1	Head Light (Low)	55	PX 26d	8	Luggage Compartment Light		5	S8.5/8.5
	Front Position Light	5	W2.1X9.5d	9	High Mounted Stop Light	With spoiler	2.4 (LED)	N/A
2	Map Light	10	W2.1×9.5D			Without spoiler	3.5 (LED)	-
3	Front Turn Signal Light	21	BAU15s	10	Rear Combination	Back-up Light	16	W2.1X9.5d
4	Front Fog Light	51	P22d	11		Turn Signal Light	21	BA15s
5	Head Light (High)	55	PX 26d	12		Stop/Tail Light	21/5	BAY15d
6	Side repeater light	5	W2.1X9.5d	13	License Plate Light		5	W2.1X9.6d
7	Front Door Edge Warning Light	5	W2.1X9.5d	14	Rear Fog Light		21	BA15s

G200C02GK-GAT

Engine Compartment

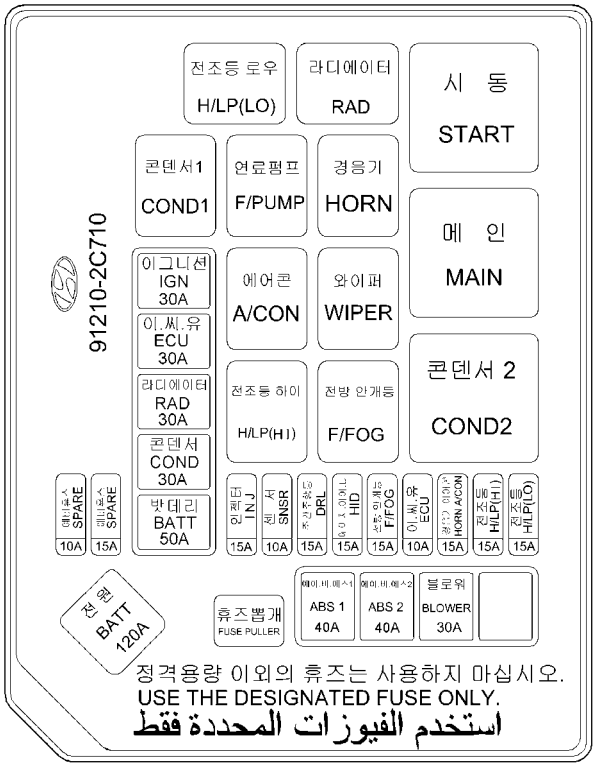

HGK4005

NOTE:

Not all fuse panel descriptions in this manual may be applicable to your vehicle. It is accurate at the time of printing. When you inspect the fuse box on your vehicle, refer to the fuse box label.

DESCRIPTION	FUSERATING	PROTECTED COMPONENTS
BATT	120A	Generator(1.6L/2.0L)
BATT	50A	BCM BOX(Tail lamp relay,Power connector,Fuse(2,7,12,13,19,20,24))
COND	30A	Condenser fan relay
RAD	30A	Radiator fan relay
ECU	30A	Engine control relay, Fuel pump relay, A/T control relay, Generator,ECM(1.6L/2.7L),PCM(2.0L)
IGN	30A	Ignition switch,Start relay
ABS 1	40A	ABS/ESP control module,ESP Air bleeding connector
ABS 2	40A	ABS/ESP control module,ESP Air bleeding connector
BLOWER	30A	Blower relay
INJ	15A	Injector
SNSR	10A	Oxygen sensor,Camshaft position sensor, Idle speed control actuator
DRL	15A	DRL control module
F/FOG	15A	Front fog lamp relay
ECU	10A	TCM(2.7L),ECM(2.7L/1.6L)
HORN,A/CON	15A	Horn relay,A/C relay
H/LP (HI)	15A	Head lamp relay(High)
H/LP (LO)	15A	Head lamp relay(Low)

G200D02GK-GAT

Inner Panel

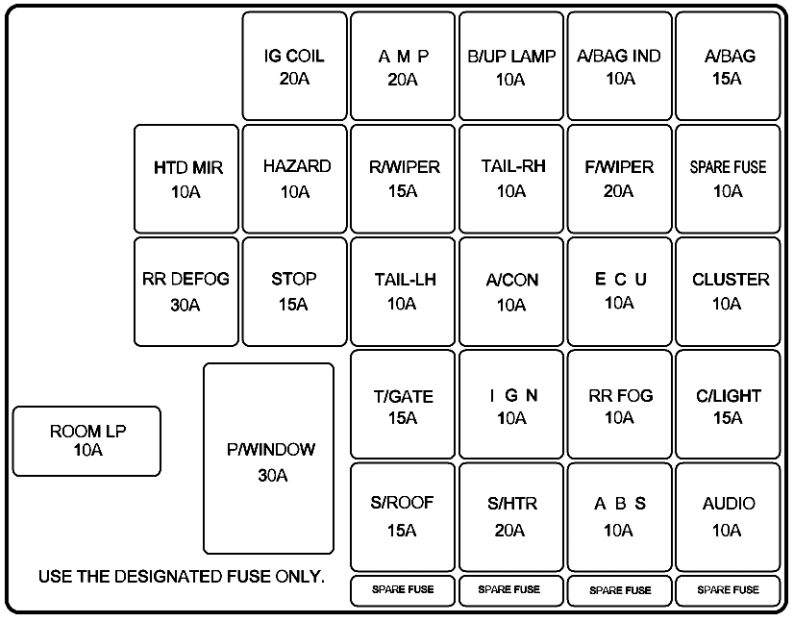

OGK066010L

DESCRIPTION	FUSERATING	PROTECTED COMPONENTS
IG COIL	20A	Ignition coil(1.6L/2.7L), Electronic chrome mirror
AMP	20A	AMP
B/UP LAMP	10A	Back-up lamp switch,Transaxle range switch,Cruise control module,Stop lamp switch
A/BAG IND	10A	Instrument cluster (A/BAG IND.)
A/BAG	15A	SRS control module
HTD MIR	10A	Mirror defogger
HAZARD	10A	Hazard relay
R/WIPER	15A	Rear wiper motor,Rear intermittent wiper relay
TAIL-RH	10A	Right tail lamps,Glove box lamp
F/WIPER	20A	Front wiper motor,Front wiper relay
RR DEFOG	30A	Defogger relay
STOP	15A	Stop lamp switch,Burglar alarm horn relay,Folding/Unfolding relay
TAIL-LH	10A	Left tail lamps
A/CON	10A	A/C control module, Blower relay
ECU	10A	ECM, Multi gauge unit, TCM, Vehicle speed sensor
CLUSTER	10A	Instrument cluster (Power), Per-excitation resister, DRL Control module,Generator
ROOM LP	10A	Room lamp,Clock,Audio,Data link connector,Multi gauge unit
P/WINDOW	30A	Power window relay
T/GATE	15A	Trunk lid switch
IGN	10A	AQS sensor,Head lamp relay,DRL Control module
RR FOG	10A	Rear fog lamp
C/LIGHT	15A	Cigarette lighter,Outside mirror switch
S/ROOF	15A	Sunroof,Power door lock/Unlock relay
S/HTR	20A	Seat warmer
ABS	10A	ESP/ABS control module
AUDIO	10A	Audio,Digital clock

EMISSION CONTROL SYSTEMS

Emission Control Systems 7-2
Catalytic Converter 7-3

7

7

EMISSION CONTROL SYSTEMS

SH010A1-E

(Not all models)

Depending upon the market for which the vehicle is destined, the emission control system will comprise one or more of the following emission control devices.

(1) Crankcase emission control system
(2) Evaporative emission control system
(3) Exhaust emission control system

In order that the proper functioning of the emission control systems may be ensured, it is recommended that the vehicle is inspected and maintained by a Hyundai authorised repairer in accordance with the maintenance schedule in this manual.

DH010B1-E

1. Crankcase Emission Control System

The positive crankcase ventilation (PCV) system is employed to prevent air pollution caused by blow-by gases being emitted from the crankcase.
This system supplies fresh air to the crankcase through the air cleaner. Inside the crankcase, the fresh air mixes with blow-by gases, then passes through the PCV valve into the intake system.

ZH010C1-E

2. Evaporative Emission Control System

The Evaporative Emission Control System is designed to prevent fuel vapors from escaping into the atmosphere.

Canister

Whilst the engine is inoperative, fuel vapors generated inside the fuel tank are absorbed and stored in the canister.

When the engine is running, the fuel vapors absorbed in the canister are drawn into the induction system through the purge control solenoid valve.

Purge Control Solenoid Valve

The purge control solenoid valve is controlled by the ECU (Engine Control Unit); when the engine coolant temperature is low, and during idling, it closes, so that evaporated fuel is not taken into the surge tank. After engine warm-up, during ordinary driving, it opens to introduce evaporated fuel to the surge tank.

JH010D1-E

3. Exhaust Emission Control System

This system helps control oxides of nitrogen by recirculating a portion of the exhaust gases into the intake manifold, thereby reducing cylinder combustion temperatures.

CATALYTIC CONVERTOR

SH020A1-E

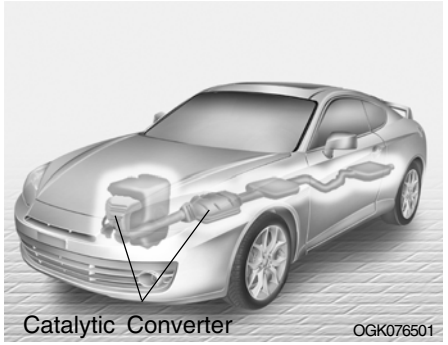

Hyundai Coupe models are fitted with catalytic convertors which require special operating considerations. The catalytic convertor serves to oxidize certain noxious elements of the exhaust gases leaving the engine to reduce the level of pollutants emitted from the vehicle and, provided that care is exercised to prevent damage, the catalyst will operate efficiently for the life of the vehicle.

It is of the utmost importance that the following information is read and understood by the vehicle operator in order to prevent operational problems arising from damage to the catalyst.

Damage to the catalyst will result if contamination occurs through the use of leaded fuel. Whilst the vehicle is fitted with a reduced diameter filler neck to prevent charging of the fuel tank with a leaded fuel pump nozzle, it is possible that the use of funnels or fuel cans will permit leaded fuel to be introduced into the fuel tank.

The catalyst is intolerant of unburnt fuel and therefore if an engine misfire condition exists, damage to the catalyst will occur. It is imperative that if a misfire condition develops, the vehicle is immediately presented to a Hyundai authorised repairer for rectification. Similarly, the practice of certain ignition system diagnosis procedures which involve inducing a misfire (cylinder power balance tests for example) may result in catalyst damage. For these reasons, it is advisable that the exhaust gas emission be tested at each routine service with a gas analyzer having a Hydrocarbon measuring facility to ensure continued reliability of the catalyst.

Push or tow starting of the vehicle is to be avoided since unburnt fuel may enter the catalyst and result in damage. (Note, it is impossible to push or tow start a Hyundai model equipped with fuel injection since the fuel pump safety interlock will prevent the pump from operating under these conditions).

Operation of the catalyst involves extremely high temperatures being attained within the catalytic convertor, and although the convertor is fitted with heat shields, it is important that the vehicle is not parked over combustible or volatile material which may result in fire.

If the above precautions are not adhered to and the catalyst becomes inoperative, the resultant increase in core temperature will result in a "melt down" where the catalyst core will melt and subsequently may block the exhaust system.

Due to the fragile nature of the catalyst element, it is important that damage does not occur when the vehicle is raised by means of a garage jack. Care must also be exercised to avoid driving over road hazards or debris which may cause damage to the catalyst element.

CONSUMER INFORMATION

Vehicle Identification Number (VIN) 8-2
Engine Number 8-2
Tyre Information 8-3
Tyre Pressures 8-3
Snow Tyres 8-4
Tyre Chains 8-4
Tyre Rotation 8-5
Tyre Balancing 8-6
Tyre Replacement 8-6
Wheel Replacement 8-7
Spare Tyre and Tools 8-7

8

2 VEHICLE IDENTIFICATION NUMBER (VIN)

SI010A1-E

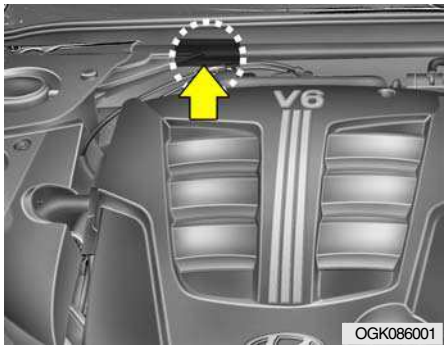

The vehicle identification number (VIN) is unique to each individual vehicle and is the number (sometimes referred to as chassis number) used upon the vehicle registration document to identify the vehicle.
The VIN will be found stamped upon a plate attached to the engine bulkhead.

ENGINE NUMBER

SI010B1-E

1.6L

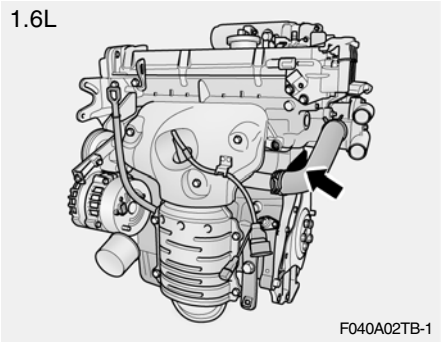

2.0L

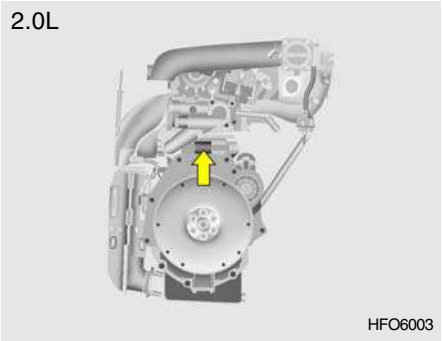

2.7L

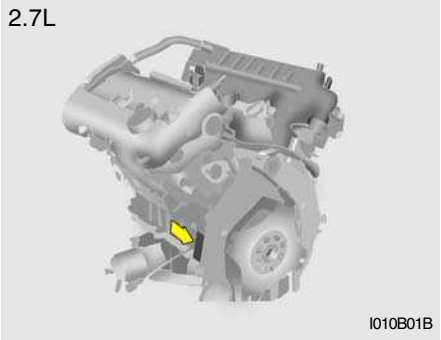

The engine number is stamped on the engine block as shown in the drawing.

TYRE

ZI010C1-E

TYRE INFORMATION

The tyres supplied on your new Hyundai are chosen to provide the best performance for normal driving.

I030A01GK-EAT

TYRE PRESSURES

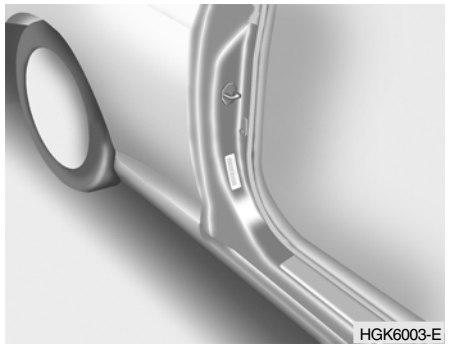

In modern high-speed motoring, correct tyre pressures are vitally important. Incorrect tyre pressures can affect vehicle safety by causing reduced adhesion, steering response and tyre failure through overheating.

RIM SIZE	TYRE SIZE	PRESSURE, kPa (PSI)			
		UP TO 2 PERSONS		UP TO MAX.LOAD	
		FRONT	REAR	FRONT	REAR
6.0Jx15	195/65R15	210(30)	210(30)	210(30)	210(30)
6.5Jx16	205/55R16	210(30)	210(30)	230(33)	230(33)
7.0Jx17	215/45R17	220(32)	210(30)	240(35)	230(33)
4Tx16	T125/70R16	420(60)	420(60)	420(60)	420(60)

The tyre pressure must only be checked when the tyres are cold. The correct tyre pressures are indicated on the label affixed to the driver's door pillar and above.
Tyre pressures should be increased by 3 psi when the vehicle is driven fully laden or under conditions of sustained high speed motoring.

ZI030A2-E

SNOW TYRES

If you equip your car with snow tyres, they should be the same size and have the same load capacity as the original tyres. Do not drive faster than 70 mph (113 km/h) when your car is equipped with snow tyres.

I050A01GK-EAT

TYRE CHAINS

Tyre chains should be installed on the front wheels. Be sure that the chains are installed in accordance with the manufacturer's instructions. Refer to the following information.

Tyre size	Snow Chain Thickness
195/65 R 15	Max. 0.59 in. (15 mm)
205/55 R 16	Max. 0.39 in. (10 mm)
215/45 R 17	Max. 0.39 in. (10 mm)

To minimise tyre and chain wear, do not continue to use tyre chains when they are no longer needed.

WARNING:

- **When driving on roads covered with snow or ice, drive at less than 20 mph (30 km/h).**
- **Use tyre chains less than 0.39 in. (10 mm) to 16", 17" tyre.**
- **Avoid sudden stop and turn.**
- **Tighten firmly not to hear contact sound, if it still sounds, remove the chains for damage protection.**

I060A01GK-EAT

TYRE ROTATION

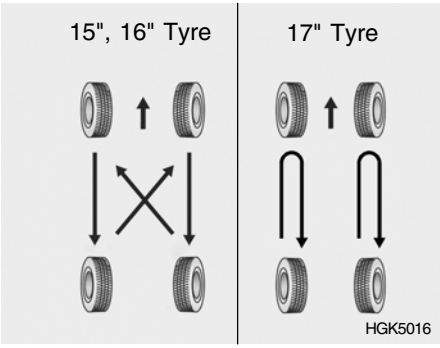

The tyre wear characteristics will vary between each tyre dependant upon the conditions of use. It is normal for the front tyres to wear more rapidly than those fitted to the rear of the vehicle and therefore tyre rotation will provide a means of helping to ensure an even wear rate across the tyre set. For vehicles fitted with radial ply tyres, rotation should be confined to front to rear tyre alternation. It is not recommended that radial ply tyres be rotated from side to side.

NOTE:
Aluminium wheels which are not supplied as Original Equipment should not be mixed on the same vehicle with the original steel wheels.

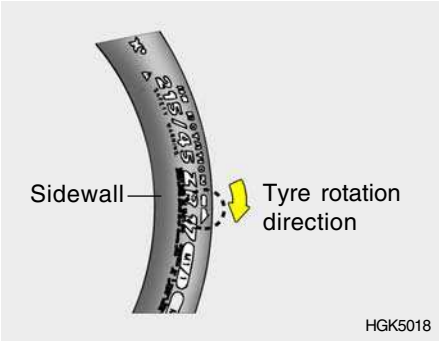

WARNING:
When rotating the 215/45 R17 tyres, ensure to follow the"ROTATION" direction marked on the sidewall of tyres.
When rotating the tyres of the left and right, separate the wheel from the tyre and then re-assemble them. However, it is acceptable that the steel spare wheel be used in conjunction with Original Equipment aluminium wheels since the offset of both wheels is compatible. Radial and cross ply tyres should not be mixed on the same vehicle.

SI060A2-E

TYRE BALANCING

Incorrect tyre balance will cause steering vibration and uneven tyre wear. The vehicle tyres are balanced during production but may need further balancing throughout the life of the tyres. It is recommended that the tyres be balanced on the car for best results and that the tyres are balanced whenever they have been removed from the wheel for repair.

NOTE:

Should abnormal wear be noted on a tyre, then it is recommended that the wheel alignment be checked by your Hyundai authorised repairer at the earliest opportunity.

SI060B2-E

TYRE REPLACEMENT

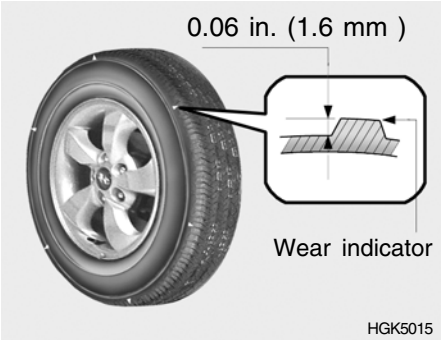

Tyres must be replaced when the wear indicators appear as a solid bar across the tyre tread. At this point, the remaining tread depth will be approximately 0.06 in. (1.6 mm). In addition to this, the tyre must be replaced if any portion of the tread has become bald or if there are any lumps, bulges or deep cuts in the sidewalls or tread.
Replacement tyres must be of the recommended size and rating and should be of the same manufacture and tread pattern on each axle.

WARNING:

Tyres degrade over time, even when they are not being used. Regardless of the remaining tread, it is recommended that tyres generally be replaced after six (6) years of normal service. Heat caused by hot climates or frequent high loading conditions can accelerate the aging process. Failure to follow this warning can result in sudden tyre failure, which could lead to a loss of control and an accident involving serious injury or death.

SI060D1-E

WHEEL REPLACEMENT

The original wheels may only be replaced with Hyundai Approved Wheels.

WARNING:
Driving on worn or defective tyres is dangerous. Worn tyres may cause loss of steering control and a serious deterioration of braking efficiency. Defective tyres may cause vibration and loss of control through blow outs.

Tyres of different size, construction or tread pattern should not be intermixed on the same axle. Radial and cross ply tyres should not be used on the same vehicle.
The use of tyres and wheels of non approved sizes can be dangerous.

I100A01FC-EAT

Your Hyundai is delivered with the following:

Spare tyre and wheel
Wheel nut wrench, Wrench bar, Spanner, Screwdriver
Jack

VEHICLE SPECIFICATIONS

MEASUREMENT 9-2
ENGINE 9-3
LUBRICATION CHART 9-4

9

J010A02GK-EAT
MEASUREMENT

in. (mm)

Overall length			173 (4395)
Overall width			69.3 (1760)
Overall height (unladen)			52.4 (1330)
Wheel base			99.6 (2530)
Wheel tread	195/65 R15	Front	58.7 (1490)
		Rear	
	205/55 R16	Front	59.5 (1510)
		Rear	
	215/45 R17	Front	59.1 (1500)
		Rear	

J020A01GK-EAT
POWER STEERING

Type	Rack and pinion
Wheel free play	0 ~ 1.18 in. (0 ~ 30 mm)
Rack stroke	5.20 in. (132 mm)
Oil pump type	Vane type

SJ030A1-E
FUEL SYSTEM

Fuel tank capacity	55 litres

J030A01GK-EAT
TYRE

Option	195/65 R15, 205/55 R16, 215/45 R17

J035A02GK-EAT
SPARE TYRE

Standard	T125/70 R16 (Temporary)

J040A03GK-GAT
ELECTRICAL

Item	1.6L	2.0L	2.7L
Battery	MF 60AH	MF 68AH	MF 68AH
Alternator	90A	90A	120A

J050A01GK-GAT
BRAKE

Type	Dual hydraulic with brake booster
Front brake type	Ventilated disc
Rear brake type	Solid disc
Parking brake	Cable

ENGINE

J070A05GK-EAT

ITEMS			SPECIFICATION		
			1.6 L	2.0 L	2.7 L
Engine Type			4-Cyl., In-line DOHC		6-Cyl., V-type DOHC
Bore x Stroke			3.01 x 3.42 in. (76.5 x 87 mm)	3.22 x 3.68 in. (82 x 93.5 mm)	3.41 x 2.95 in. (86.7 x 75 mm)
Displacement (cc)			1,599	1,975	2,656
Firing order			1 - 3 - 4 - 2	1 - 3 - 4 - 2	1 - 2 - 3 - 4 - 5 - 6
Valve clearance (Cold Engine 20 ± 5°C)	For adjusting	Intake	AUTO LASH	0.0067 ~ 0.0091 in. (0.17 ~ 0.23 mm)	AUTO LASH
		Exhaust		0.0098 ~ 0.0122 in. (0.25 ~ 0.31 mm)	
	For checking	Intake		0.0047 ~ 0.011 in. (0.12 ~ 0.28 mm)	
		Exhaust		0.0079 ~ 0.015 in. (0.2 ~ 0.38 mm)	
Idle speed (rpm)			700 ± 100	700 ± 100	750 ± 100
Ignition timing (Base)			BTDC 5° ± 5°	BTDC 8° ± 5°	BTDC 12° ± 10°

4 LUBRICATION CHART

J080A04GK-EAT

Item		Oil & Grease Standard		Q'ty (litre)
Engine Oil Recommendes Shell HELIX Motor oils		API SJ, SL or ABOVE, ILSAC GF-3 or ABOVE	SAE 5W-20, 5W-30 SAE 10W-30 (ABOVE -18°C) SAE 15W-40 (ABOVE -13°C) SAE 20W-50 (ABOVE -7°C)	Drain and refill (With oil filter): 1.6L : 3.3 2.0L : 4.0 2.7L : 4.5
Engine Oil Consumption		Normal driving condition		MAX. 1L / 1000 miles
		Severe driving condition		MAX. 1L / 620 miles
Transaxle	Manual	HYUNDAI GENUINE PARTS MTF 75W/85(API GL-4)		5 speed : 2.15 6 speed : 2.2
	Auto	HYUNDAI GENUINE ATF SP-III, DIAMOND ATF SP-III, SK ATF SP-III or other brands approved by Hyundai Motor Co.,		7.8
Power Steering		PSF-3 or ATF Dexron 2		As required
Brake Fluid		DOT 3 or DOT 4 equivalent		As required
Coolant		Ethylene glycol base for aluminium radiator		1.6L/2.0L : 7.0 2.7L : 8.0

INDEX

10

10

A
Airbag 1-32
Air Cleaner Filter 6-11
Air Conditioning
  Care 6-18
  Operation 1-89, 6-18
  Switch 1-88
Antenna 1-99
Ashtray 1-60
Audio Remote Control Switch 1-79

B
Battery 6-21
Bonnet Release 1-70
Brake
  Anti-lock system 2-14
  Checking the brakes 6-16
  Effective braking 2-16
  Fluid 6-16

C
Care of Cassette Tapes 1-104
Care of Discs 1-103
Catalytic Converter 7-3
Child Restraint System 1-23
Cigar Lighter 1-60
Climate Control Air Filter 1-99, 6-18
Clock 1-59
Clutch
  Checking fluid 6-17
Combination Light
  Auto light 1-54
  High-beam switch 1-54
  Headlight flasher 1-55
  Lighting switch 1-53
  Lane change signal 1-53
  Turn signal operation 1-53
Cooling Fans 6-23
Corrosion Protection
  Cleaning the interior 4-5
  Protecting your Hyundai from corrosion 4-2
  Valeting 4-3
Cruise Control 1-76

D
Daily Operating Checks 6-5
Defrosting/Defogging 1-87
Door
  Central door lock 1-7
  Door locks 1-6
  Locking and unlocking front doors with a key 1-6
Drink Holder 1-61
Driving
  Economical driving 2-17
  Smooth cornering 2-18
  Winter motoring 2-19

E
Electronic Stability Program (ESP) 2-15
Emission Control Systems 7-2

Engine
Before starting the engine 2-3
Compartment 6-2
Coolant 6-9
Coolant temperature gauge 1-47
If the engine overheats 3-4
Number 8-2
Oil 6-6
Starting 2-5
Engine Exhaust Can Be Dangerous 2-2

F
Fog Light 1-57
Front Seats
Adjustable head restraints 1-14
Seat rake adjustment 1-13
Seat recline adjustment 1-13
Lumbar support control 1-15
Seat cushion height adjustment 1-15
Seat warmer 1-16
Fuel
Capacity 9-2
Economy 2-6
Gauge 1-47
Recommendations 1-2
Fuel Filler Lid
Remote release 1-71
Fuse Panel Description 6-34
Fuses 6-20

G
Glove box 1-66

H
Hatchback Door 1-73
Hazard Warning System 1-58
Headlight Leveling Device System 1-61
Heating and Air Conditioning Control
Rotary type 1-82
Automatic type 1-91
High-Mounted Rear Stop Light 1-70
Horn 1-75

I
Ignition Switch 2-4
Immobiliser System 1-4
Instrument Cluster and Indicator Lights 1-40
Instrument Panel Illumination Control 1-59
Intermittent Wiper 1-56

J
Jump Starting 3-3

K
Keys 1-4
If you lose your keys 3-14
Positions 2-4

L
Light Bulb Replacement 6-25
Lubrication Chart 9-4
Luggage Net 1-76

M
Maintenance Intervals
Explanation of scheduled maintenance items 5-8
Maintenance under severe usage conditions 5-7
Scheduled maintenance 5-4
Service requirements 5-2
Map Light 1-65
Mirros
Day-night inside rearview mirror 1-68
Outside rearview mirror folding 1-68
Outsde rearview mirror heating 1-67
Multi Gauge 1-52

O
Odometer 1-49

P
Parking Brake 1-69
Power Steering Fluid Level 6-23

R
Rear Seats
Before folding the rear seats 1-18
Folding rear seatbacks 1-18
Rear seat entry 1-16
Rear seat positions 1-17
Rear Window Defogger 1-58
Rear Window Wiper and Washer Switch 1-57
Running-In Your New Hyundai 1-3

S
Seats 1-12
Seat Belts 1-19
3-Point type 1-22
Adjustable height 1-21
Adjusting your seat belt 1-23
Care of seat belts 1-21
Pre-tentioner seat belt 1-29
Spectacle Case 1-65
Speedometer 1-48
Starting Procedures 2-5
Steering Wheel Tilt Lever 1-75
Stereo Sound System 1-101
Sun Visor 1-74
Sunroof 1-62

T
Tachometer 1-48
Theft Alarm System 1-8
Towing
Emergency 3-13
If your vehicle must be towed 3-11
Trailer or vehicle towing 2-20

Transaxle
Automatic 2-9
Automatic transaxle fluid checking 6-15
Manual 2-7
Trip Computer 1-50
Trip Odometer 1-49
Tyres 8-3
Balancing 8-6
Chains 8-4
Changing a flat tyre 3-7
Information 8-3
Pressure 8-3
Replacement 8-6
Rotation 8-5
Snow tyres 8-4
Spare tyre 3-5
Wheel replacement 8-7

V
Vehicle Identification Number (VIN) 8-2
Vehicle Specification 9-2
Ventilator
Centre ventilator 1-81
Side ventilator 1-81

W
Washer Reservoir 6-13
Warning and Indicator Lights 1-42
Windows Glass 1-11
Windscreen Wiper and Washer 1-55
Windscreen Wiper Blades 6-12