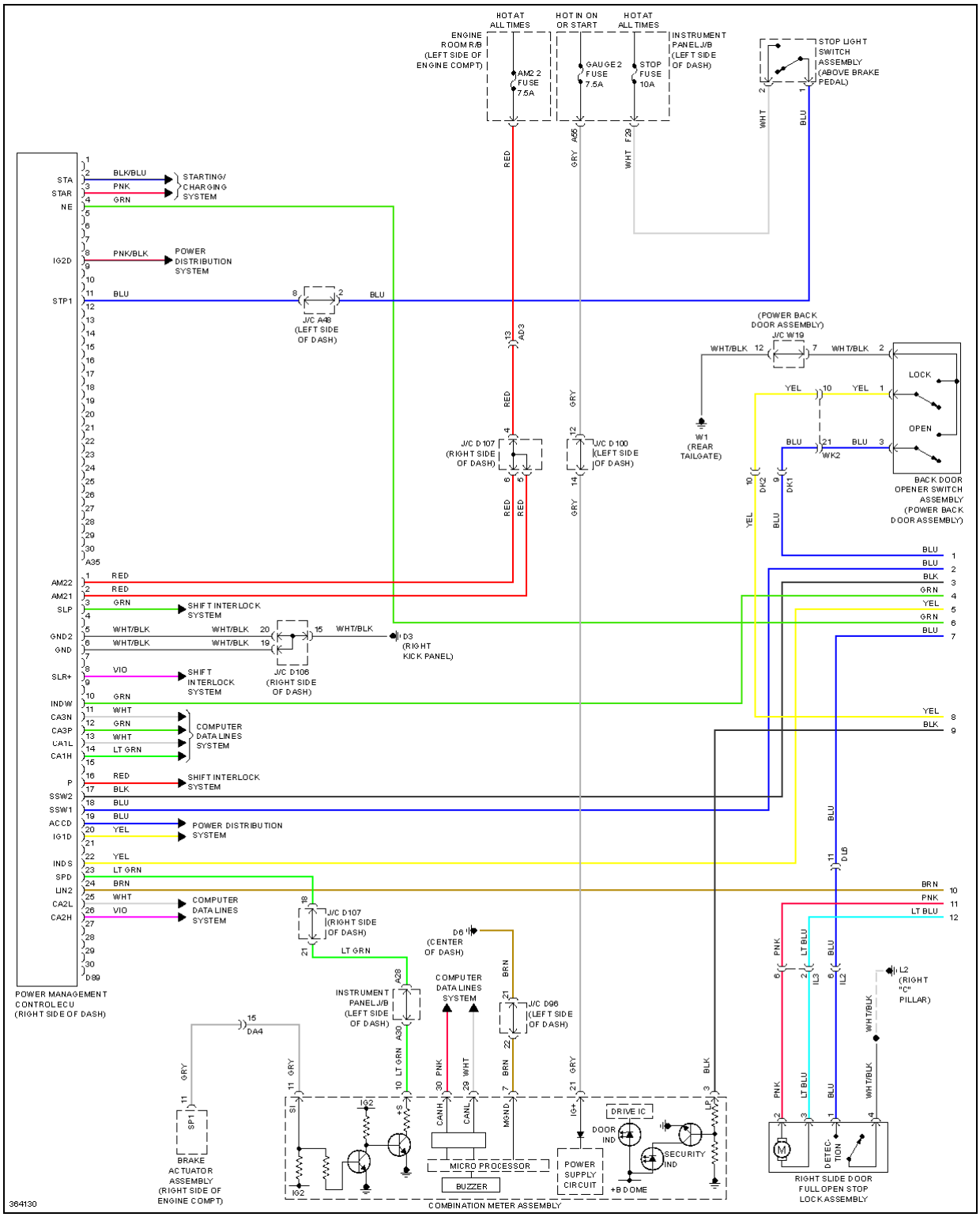

Fig. 74: Power Door Locks Circuit, W/ Smart Key System (1 of 4)

cardiagn.com

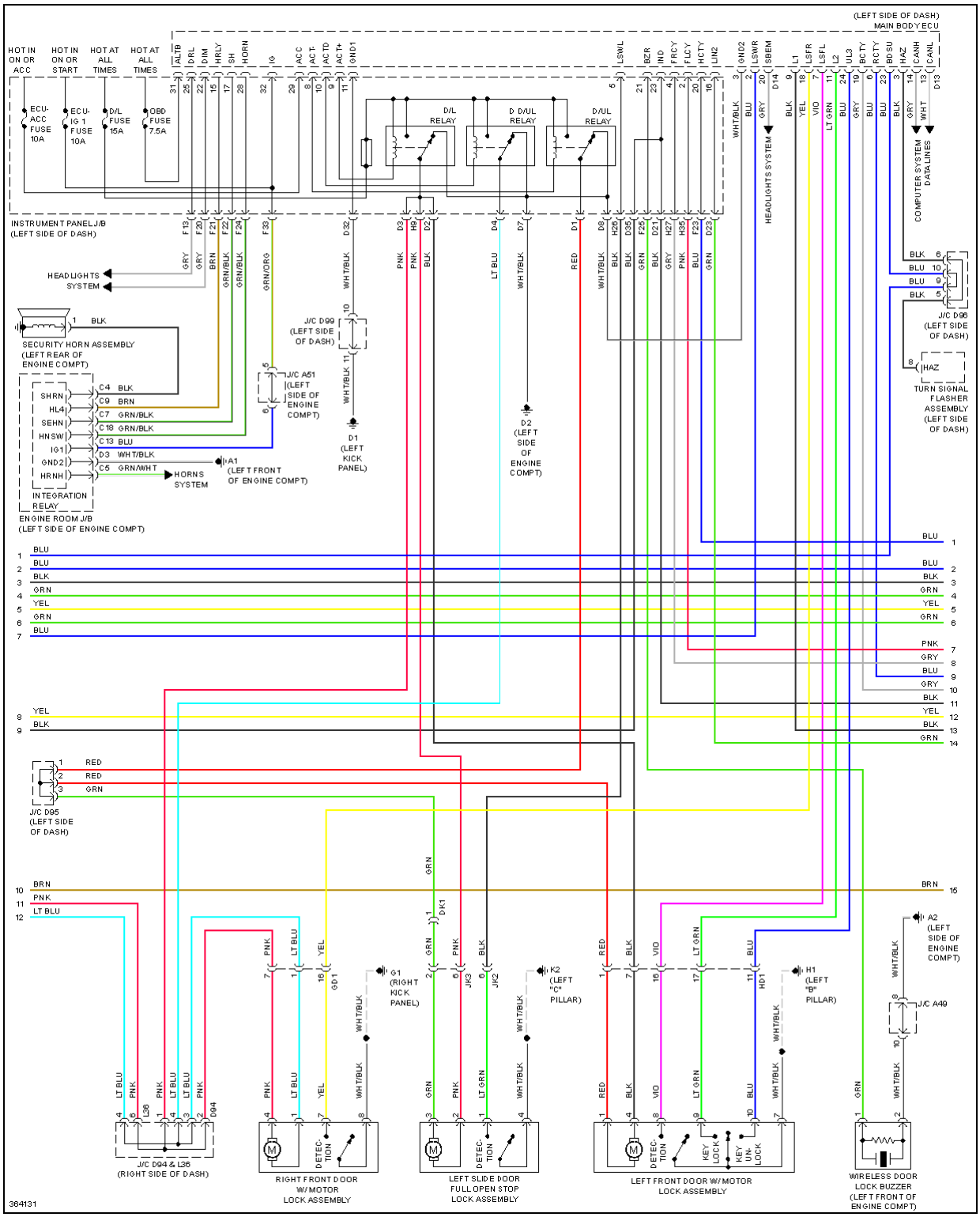

Fig. 75: Power Door Locks Circuit, W/ Smart Key System (2 of 4)

cardiagn.com

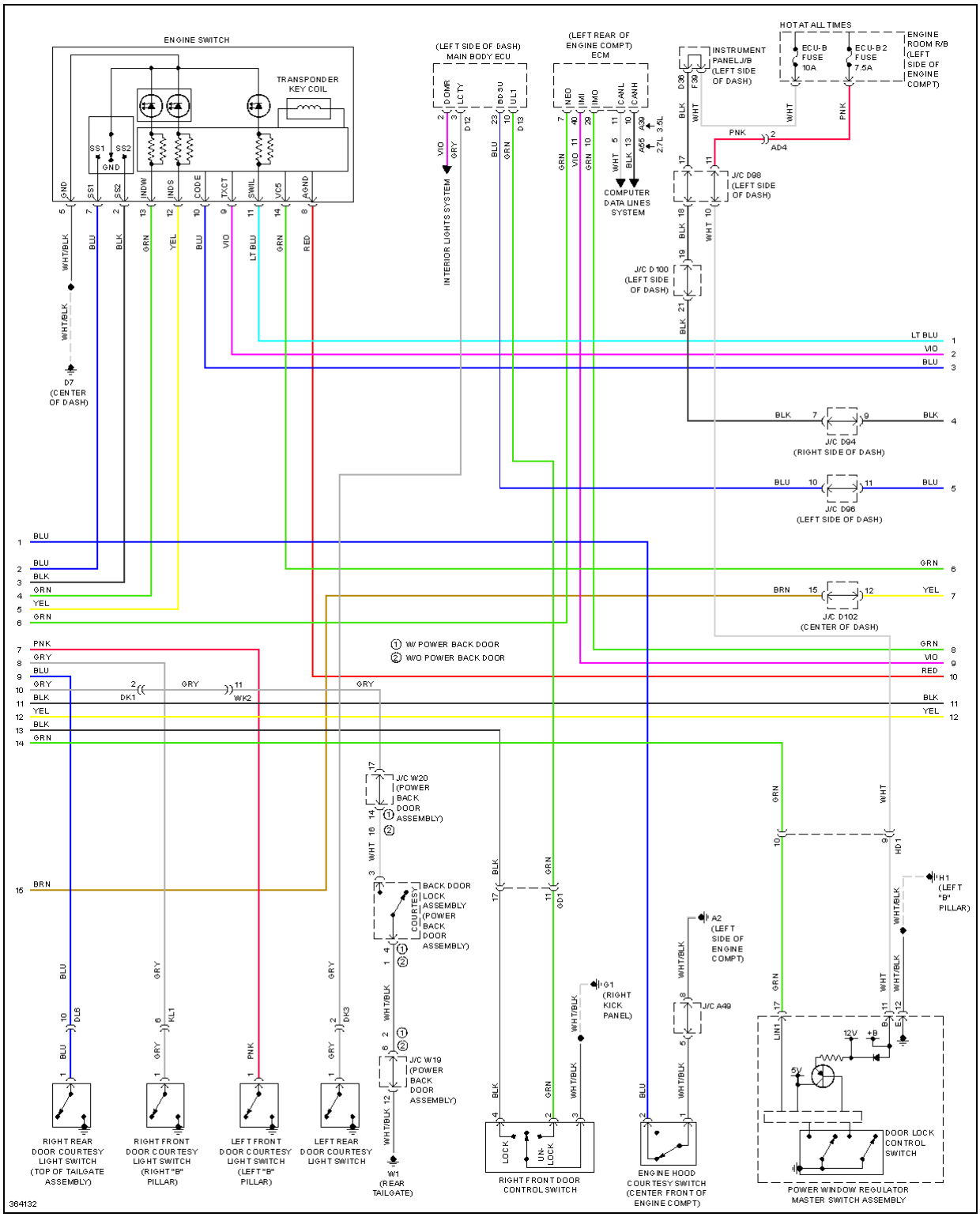

Fig. 76: Power Door Locks Circuit, W/ Smart Key System (3 of 4)

cardiagn.com

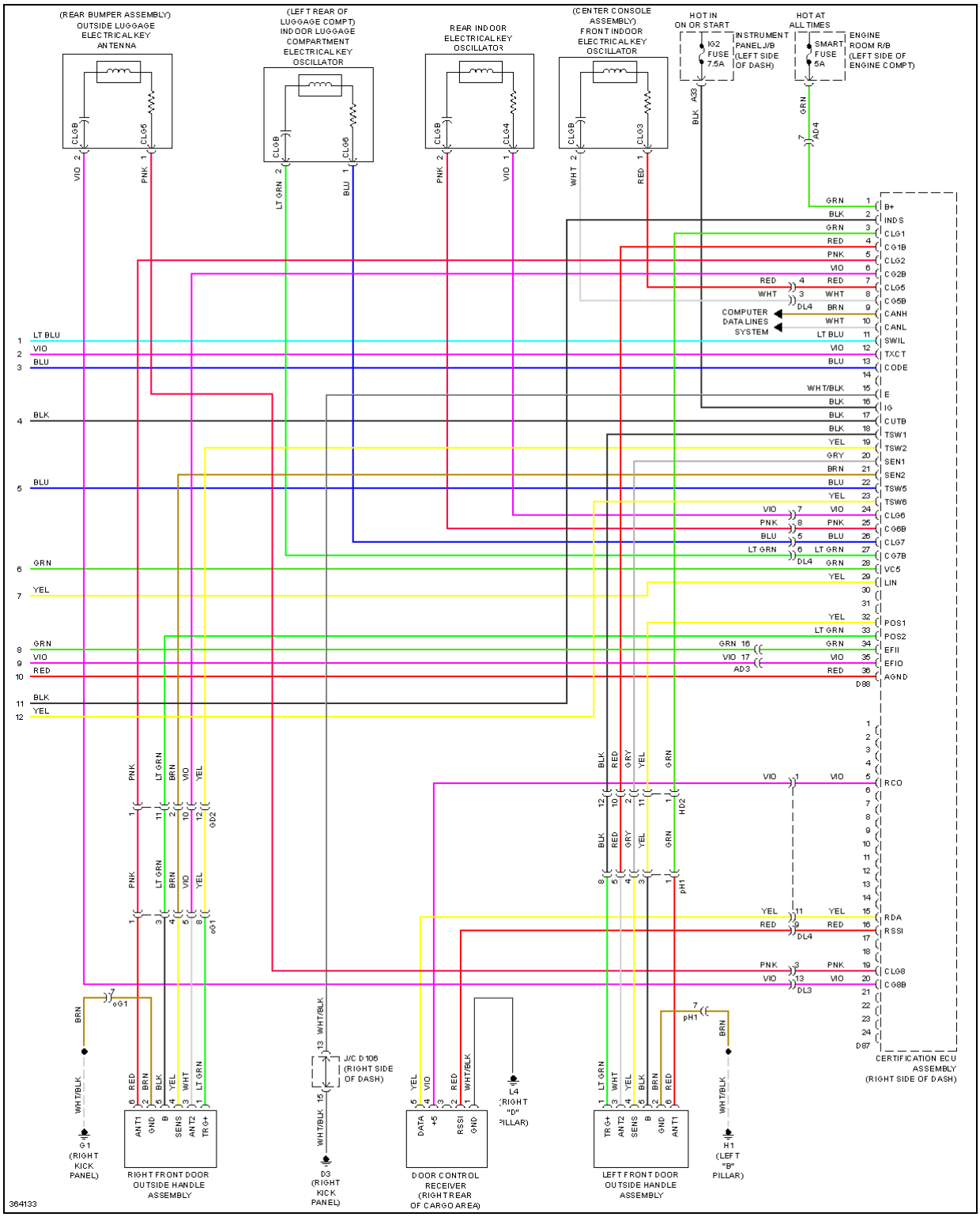

Fig. 77: Power Door Locks Circuit, W/ Smart Key System (4 of 4)

cardiagn.com