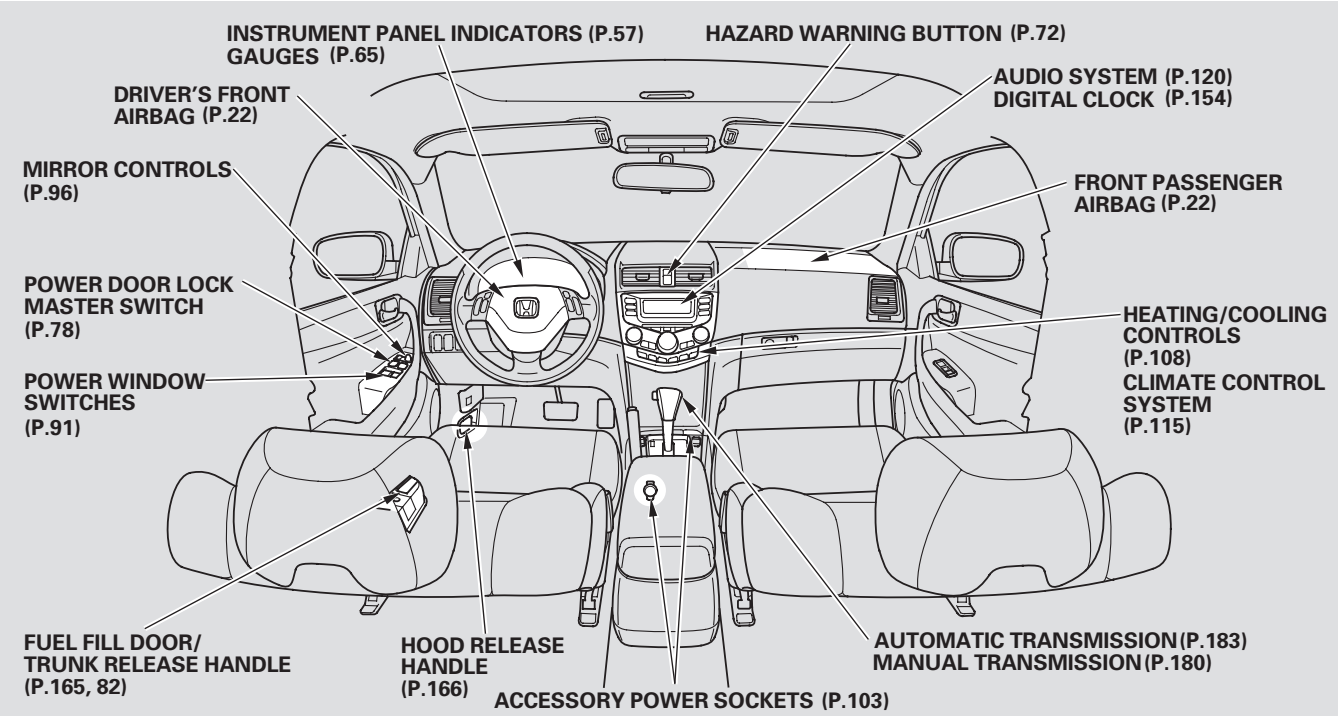
INSTRUMENT PANEL INDICATORS (P.57)
GAUGES (P.65)
HAZARD WARNING BUTTON (P.72)
AUDIO SYSTEM (P.120)
DIGITAL CLOCK (P.154)
DRIVER'S FRONT AIRBAG (P.22)
MIRROR CONTROLS (P.96)
FRONT PASSENGER AIRBAG (P.22)
POWER DOOR LOCK MASTER SWITCH (P.78)
HEATING/COOLING CONTROLS (P.108)
POWER WINDOW SWITCHES (P.91)
CLIMATE CONTROL SYSTEM (P.115)
FUEL FILL DOOR/ TRUNK RELEASE HANDLE (P.165, 82)
HOOD RELEASE HANDLE (P.166)
AUTOMATIC TRANSMISSION (P.183)
MANUAL TRANSMISSION (P.180)
ACCESSORY POWER SOCKETS (P.103)

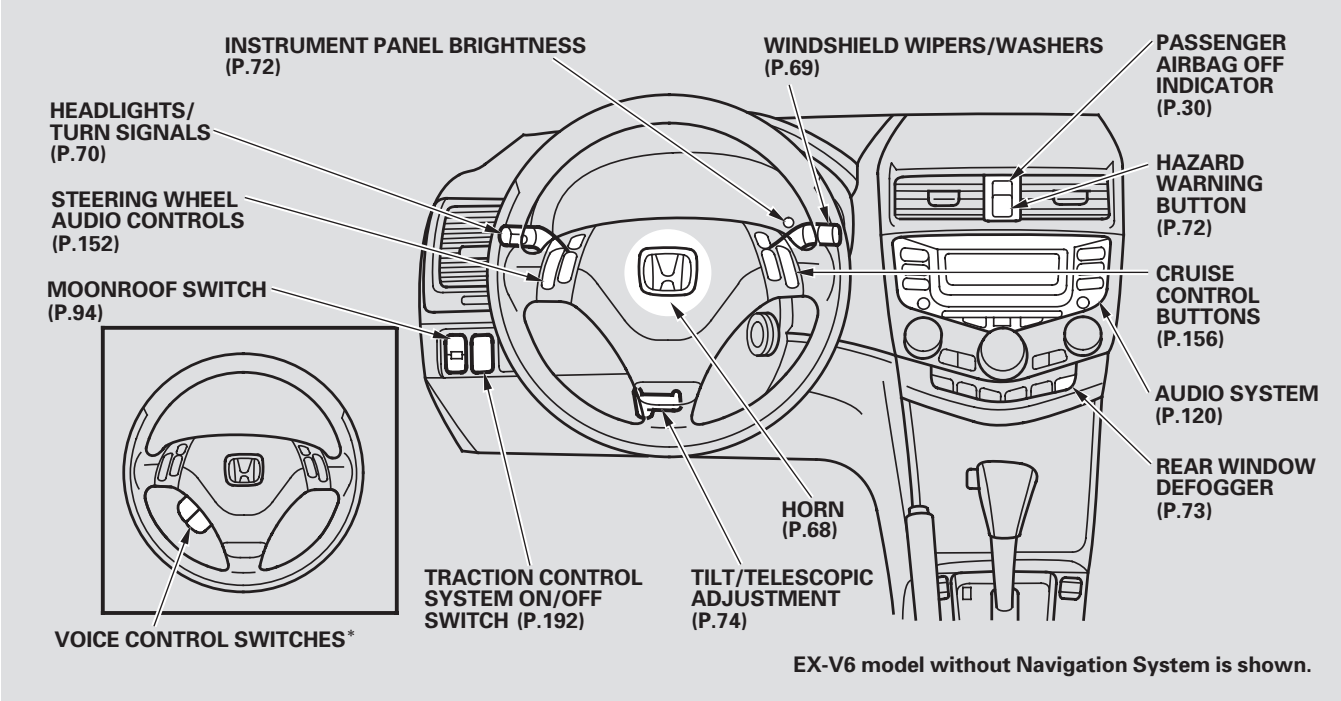

EX-V6 model without Navigation System is shown.

* : Only on vehicles equipped with Navigation System. Refer to the Navigation System Owner's Manual.

This section gives you important information about how to protect yourself and your passengers. It shows you how to use seat belts properly. It explains how your airbag work, and it tells you how to properly restrain infants and children in your vehicle.

Important Safety Precautions 6
Your Vehicle's Safety Features..... 7
Seat Belts 8
Airbags 9
Protecting Adults and Teens..... 11
1. Close and Lock the Doors..... 11
2. Adjust the Front Seats 11
3. Adjust the Seat-Backs 12
4. Adjust the Head Restraints 13
5. Fasten and Position the Lap/Shoulder Seat Belts 14
6. Adjust the Steering Wheel 15
7. Maintain a Proper Sitting Position 15
Advice for Pregnant Women..... 16
Additional Safety Precautions.... 16
Additional Information About Your Seat Belts 18
Seat Belt System Components... 18
Lap/Shoulder Belt..... 18
Automatic Seat Belt Tensioners..... 19
Seat Belt Maintenance 19
Additional Information About Your Airbags 21
Airbag System Components..... 21
How Your Front Airbags Work..... 22
Advanced Airbags 24
How Your Side Airbags Work.... 26
How Your Side Curtain Airbags Work..... 27
How the SRS Indicator Works... 27
How the Side Airbag Off Indicator Works..... 28
How the Passenger Airbag Off Indicator Works..... 29
Airbag Service..... 30
Additional Safety Precautions.... 31
Protecting Children — General Guidelines..... 32
All Children Must Be Restrained 32
All Children Should Sit in the Back Seat 33
The Passenger's Front Airbag Can Pose Serious Risks 33
If You Must Drive with Several Children 35
If a Child Requires Close Attention 35
Additional Safety Precautions.... 36
Protecting Infants and Small Childlen..... 37
Protecting Infants..... 37
Protecting Small Children 38
Selecting a Child Seat..... 39
Installing a Child Seat 40
Installing a Child Seat with LATCH..... 41
Installing a Child Seat with a Lap/Shoulder Belt..... 43
Installing a Child Seat with a Tether 45
Protecting Larger Children 47
Carbon Monoxide Hazard 51
Safety Labels..... 52

Important Safety Precautions

You'll find many safety recommendations throughout this section, and throughout this manual. The recommendations on this page are the ones we consider to be the most important.

Always Wear Your Seat Belt
A seat belt is your best protection in all types of collisions. Airbags supplement seat belts, but airbags are designed to inflate only in a moderate to severe frontal or side collision. So even though your vehicle is equipped with airbags, make sure you and your passengers always wear your seat belts, and wear them properly (see page 14).

Restrain All Children
Children age 12 and under should ride properly restrained in the back seat. Infants and small children should be restrained in a child seat. Larger children should use a booster and a lap/shoulder belt until they can use the belt properly without a booster (see page 32).

Be Aware of Airbag Hazards
While airbags can save lives, they can cause serious or fatal injuries to occupants who sit too close to them, or are not properly restrained. Infants, young children, and short adults are at the greatest risk. Be sure to follow all instructions and warnings in this manual.

Don't Drink and Drive
Alcohol and driving don't mix. Even one drink can reduce your ability to respond to changing conditions, and your reaction time gets worse with every additional drink. So don't drink and drive, and don't let your friends drink and drive, either.

Control Your Speed
Excessive speed is a major factor in crash injuries and deaths. Generally, the higher the speed, the greater the risk, but serious injuries can also occur at lower speeds. Never drive faster than is safe for current conditions, regardless of the maximum speed posted.

Keep Your Vehicle in Safe Condition
Having a tire blowout or a mechanical failure can be extremely hazardous. To reduce the possibility of such problems, check your tire pressures and condition frequently, and perform all regularly scheduled maintenance (see page 203).

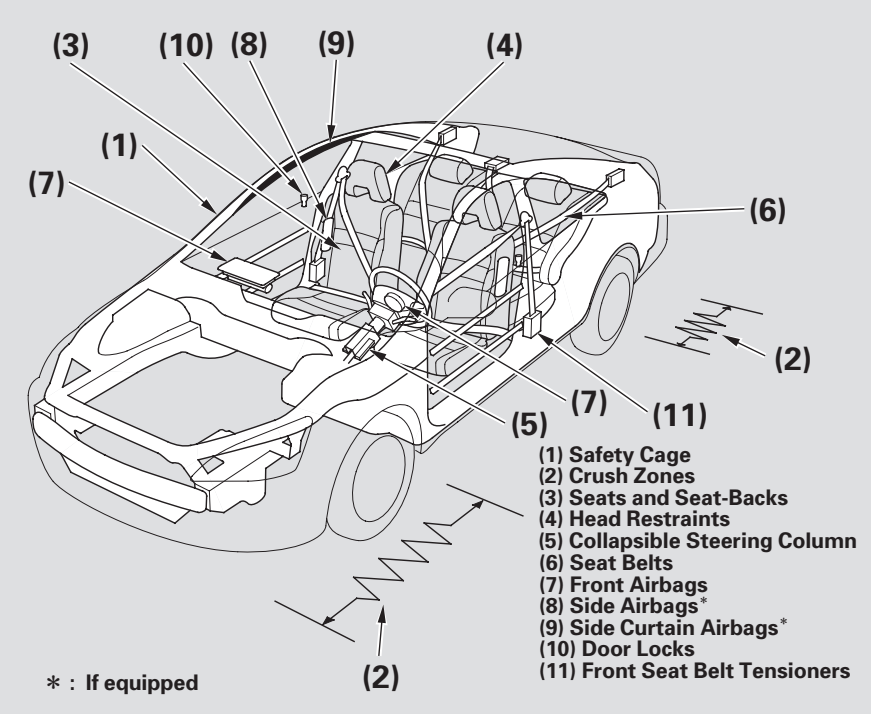

Your vehicle is equipped with many features that work together to protect you and your passengers during a crash.

Some safety features do not require any action on your part. These include a strong steel framework that forms a safety cage around the passenger compartment; front and rear crush zones, a collapsible steering column, and seat belt tensioners that tighten the front seat belts in the event of a crash.

CONTINUED

However, you and your passengers can't take full advantage of these safety features unless you remain sitting in a proper position and always wear your seat belts properly. In fact, some safety features can contribute to injuries if they are not used properly.

The following pages explain how you can take an active role in protecting yourself and your passengers.

Seat Belts
Your vehicle is equipped with seat belts in all seating positions.

Your seat belt system also includes an indicator on the instrument panel to remind you and your passengers to fasten your seat belts.

Why Wear Seat Belts
Seat belts are the single most effective safety device for adults and larger children (Infants and smaller children must be properly restrained in child seats).

Not wearing a seat belt properly increases the chance of serious injury or death in a crash, even though your vehicle has airbags.

In addition, most states and all Canadian provinces require you to wear seat belts.

When properly worn, seat belts:

- Keep you connected to the vehicle so you can take advantage of the vehicle's built-in safety features.
- Help protect you in almost every type of crash, including frontal, side, and rear impacts and rollovers.
- Help keep you from being thrown against the inside of the vehicle and against other occupants.
- Keep you from being thrown out of the vehicle.
- Help keep you in a good position should the airbags ever deploy. A good position reduces the risk of injury from an inflating airbag, and allows you to get the best advantage from the airbag.

Of course, seat belts cannot completely protect you in every crash. But in most cases, seat belts can reduce your risk of serious injury.

What You Should Do:
Always wear your seat belt, and make sure you wear it properly.

⚠ WARNING

Not wearing a seat belt properly increases the chance of serious injury or death in a crash, even though your vehicle has airbags.

Be sure you and your passengers always wear seat belts and wear them properly.

Airbags

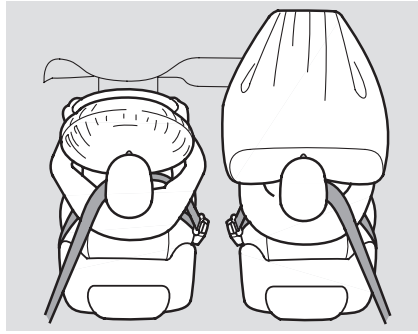

Your vehicle has a Supplemental Restraint System (SRS) with front airbags to help protect the heads and chests of the driver and a front seat passenger during a moderate to severe frontal collision (see page 22 for more information on how your front airbags work).

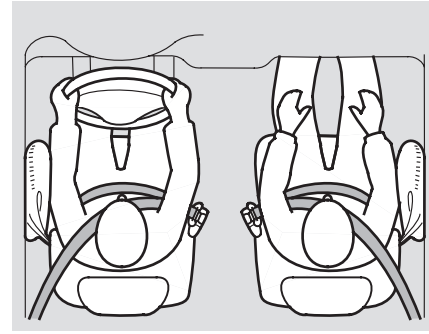

Standard on EX and all V 6 models and all Canadian models
Optional on U.S. LX model
Your vehicle also has side airbags to help protect the upper torso of the driver or a front seat passenger during a moderate to severe side impact (see page 26 for more information on how your side airbags work).

CONTINUED

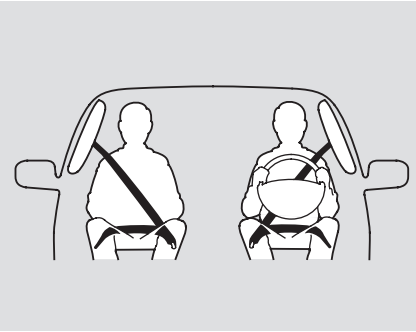

Standard on U.S. 4-cylinder EX-L and EX-V6 models

Your vehicle also has side curtain airbags to help protect the heads of the driver, front passenger, and passengers in the outer rear seating positions (see page 27 for more information on how your side curtain airbags work).

The most important things you need to know about your airbags are:

- ***Airbags do not replace seat belts.*** They are designed to supplement the seat belts.
- ***Airbags offer no protection in rear impacts, rollovers, or minor frontal or side collisions.***
- ***Airbags can pose hazards.*** To do their job, airbags must inflate with tremendous force. So while airbags help save lives, they can cause minor injuries or more serious or even fatal injuries if occupants are not properly restrained or sitting properly.

What you should do: Always wear your seat belt properly, and sit upright, and as far back from the steering wheel while allowing full control of the vehicle. A front passenger should move their seat as far back from the dashboard as possible.

The rest of this section gives more detailed information about how you can maximize your safety.

Remember, however, that no safety system can prevent all injuries or deaths that can occur in severe crashes, even when seat belts are properly worn and the airbags deploy.

Introduction
The following pages provide instructions on how to properly protect the driver, adult passengers, and teenage children who are large enough and mature enough to ride in the front. See pages 32 — 36 for important guidelines on how to properly protect infants, small children, and larger children who ride in your vehicle.

1.Close and Lock the Doors
After everyone has entered the vehicle, be sure the doors are closed and locked.

Your vehicle has a door monitor indicator on the instrument panel to indicate when a specific door is not tightly closed.

Locking the doors reduces the chance of someone being thrown out of the vehicle during a crash, and it helps prevent passengers from accidentally opening a door and falling out.

Locking the doors also helps prevent an outsider from unexpectedly opening a door when you come to a stop.

See page 78 for how to lock the doors, and page 61 for how the monitor indicator works.

2.Adjust the Front Seats

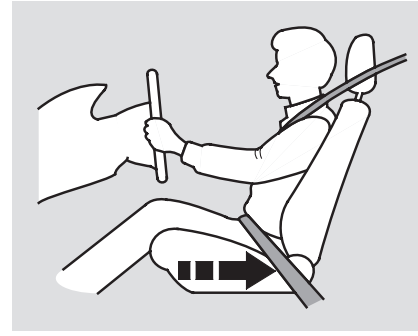

Adjust the driver's seat as far to the rear as possible while allowing you to maintain full control of the vehicle. Have a front passenger adjust their seat as far to the rear as possible.

CONTINUED

If you sit too close to the steering wheel or dashboard, you can be seriously injured by an inflating front airbag, or by striking the steering wheel or dashboard.

The National Highway Traffic Safety Administration and Transport Canada recommend that drivers allow at least 10 inches (25 cm) between the center of the steering wheel and the chest. In addition to adjusting the seat, you can adjust the steering wheel in and out (see page 74).

If you cannot get far enough away from the steering wheel and still reach the controls, we recommend that you investigate whether some type of adaptive equipment may help.

Once your seat is adjusted correctly, rock it back and forth to make sure the seat is locked into position. See page 83 for how to adjust the front seats.

⚠ WARNING

Sitting too close to a front airbag can result in serious injury or death if the front airbags inflate.

Always sit as far back from the front airbags as possible.

3. Adjust the Seat-Backs

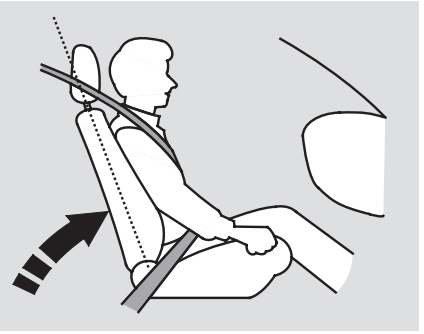

Adjust the driver's seat-back to a comfortable, upright position, leaving ample space between your chest and the airbag cover in the center of the steering wheel.

Passengers with adjustable seat-backs should also adjust their seat-back to a comfortable, upright position.

Reclining a seat-back so that the shoulder part of the belt no longer rests against the occupant's chest reduces the protective capability of the belt. It also increases the chance of sliding under the belt in a crash and being seriously injured. The farther a seat-back is reclined, the greater the risk of injury.

⚠WARNING

Reclining the seat-back too far can result in serious injury or death in a crash.

Adjust the seat-back to an upright position, and sit well back in the seat.

See page 83 for how to adjust seat-backs.

4.Adjust the Head Restraints

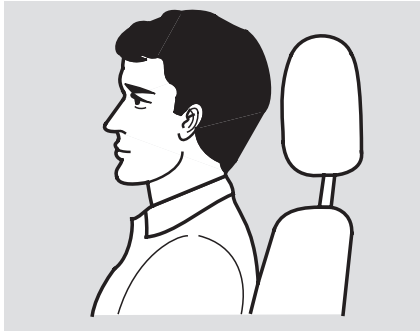

Adjust the driver's head restraint so the back of your head rests against the center of the restraint.

Have passengers with adjustable restraints adjust their restraints properly as well. Taller persons should adjust their restraint as high as possible.

⚠WARNING

Improperly positioning head restraints reduces their effectiveness and you can be seriously injured in a crash.

Make sure head restraints are in place and positioned properly before driving.

Properly adjusted head restraints will help protect occupants from whiplash and other crash injuries.

See page 88 for how to adjust the head restraints.

5. Fasten and Position the Lap/ Shoulder Seat Belts

Insert the latch plate into the buckle, then tug on the belt to make sure the belt is securely latched. Also check that the belt is not twisted, because a twisted belt can cause serious injuries in a crash.

Position the lap part of the belt as low as possible across your hips, then pull up on the shoulder part of the belt so the lap part fits snugly. This lets your strong pelvic bones take the force of a crash and reduces the chance of internal injuries.

If necessary, pull up on the belt again to remove any slack, then check that the belt rests across the center of your chest and over your shoulder. This spreads the forces of a crash over the strongest bones in your upper body.

⚠ WARNING

Improperly positioning the seat belts can cause serious injury or death in a crash.

Make sure all seat belts are properly positioned before driving.

Never place the shoulder portion of a lap/shoulder belt under your arm or behind your back. This could cause very serious injuries in a crash.

If a seat belt does not seem to work as it should, it may not protect the occupant in a crash.

No one should sit in a seat with an inoperative seat belt. Using a seat belt that is not working properly can result in serious injury or death. Have your Honda dealer check the belt as soon as possible.

See page 18 for additional information about your seat belts and how to take care of them.

6. Adjust the Steering Wheel

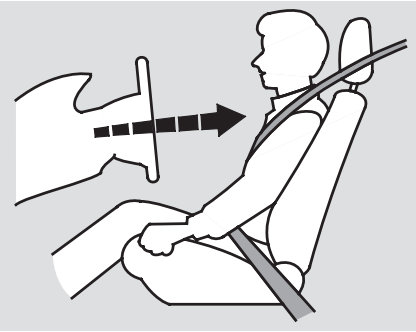

Adjust the steering wheel, if needed, so that the wheel points toward your chest, not toward your face. This provides optimal protection from the front airbag.

See page 74 for how to adjust the steering wheel.

7. Maintain a Proper Sitting Position

After all occupants have adjusted their seats and put on seat belts, it is very important that they continue to sit upright, well back in their seats, with their feet on the floor, until the vehicle is parked and the engine is off.

Sitting improperly can increase the chance of injury during a crash. For example, if an occupant slouches, lies down, turns sideways, sits forward, leans forward or sideways, or puts one or both feet up, the chance of injury during a crash is greatly increased.

In addition, an occupant who is out of position in the front seat can be seriously or fatally injured in a crash by striking interior parts of the vehicle or being struck by an inflating front airbag. Being struck by an inflating side airbag can possibly result in serious injuries.

⚠ WARNING

Sitting improperly or out of position can result in serious injury or death in a crash.

Always sit upright, well back in the seat, with your feet on the floor.

Advice for Pregnant Women

If you are pregnant, the best way to protect yourself and your unborn child when driving or riding in a vehicle is to always wear a seat belt, and keep the lap part of the belt as low as possible across the hips.

When driving, remember to sit upright and adjust the seat as far back as possible while allowing full control of the vehicle. When riding as a front passenger, adjust the seat as far back as possible.

This will reduce the risk of injuries to both you and your unborn child that can be caused by a crash or an inflating front airbag.

Each time you have a check-up, ask your doctor if it's okay for you to drive.

Additional Safety Precautions

- ***Two people should never use the same seat belt.*** If they do, they could be very seriously injured in a crash.

- ***Do not put any accessories on seat belts.*** Devices intended to improve occupant comfort or reposition the shoulder part of a seat belt can reduce the protective capability of the seat belt and increase the chance of serious injury in a crash.

- ***Do not place hard or sharp objects between yourself and a front airbag.*** Carrying hard or sharp objects on your lap, or driving with a pipe or other sharp objects in your mouth, can result in injuries if your front airbag inflates.

- ***Keep your hands and arms away from the airbag covers.*** If your hands or arms are close to an airbag cover, they could be injured if the airbag inflates.

- ***Do not attach or place objects on the front airbag covers.*** Objects on the covers marked "SRS AIRBAG" could interfere with the proper operation of the airbags or be propelled inside the vehicle and hurt someone if the airbags inflate.

- ***On models with side airbags, do not attach hard objects on or near a door.*** If a side airbag or a side curtain airbag inflates, a cup holder or other hard object attached on or near the door could be propelled inside the vehicle and hurt someone.

- ***Do not modify the front seats.*** This could make the driver's seat position sensor or the front passenger's seat weight sensors ineffective.

- ***Do not place any items under the front seats.*** This could cause problems with the driver's seat position sensor or the front passenger's seat weight sensors (see page 24 for more information).

- ***Do not place the right rear floor mat under the front passenger's seat.*** This could make the front passenger's weight sensors ineffective. Make sure the right rear floor mat is hooked over the floor mat anchor (see page 240).

Additional Information About Your Seat Belts

Seat Belt System Components
Your seat belt system includes lap/shoulder belts in all five seating positions. The front seat belts are also equipped with automatic seat belt tensioners.

The seat belt system includes an indicator on the instrument panel to remind you and your passengers to fasten your belts.

If you turn the ignition switch to ON (II) without fastening your belt, a beeper will sound and the indicator will blink. The beeper will stop after several seconds, but the indicator will stay on until the driver's seat belt is fastened.

If you do not fasten your seat belt before the beeper stops, the indicator will stop blinking but remain on. If you continue driving without fastening your seat belt, the indicator will start blinking again and the beeper will sound at regular intervals.

Lap/Shoulder Belt
The lap and shoulder belt goes over your shoulder, across your chest, and across your hips.

To fasten the belt, insert the latch plate into the buckle, then tug on the belt to make sure the buckle is latched (see page 14 for how to properly position the belt).

To unlock the belt, push the red PRESS button on the buckle. Guide the belt across your body so that it retracts completely. After exiting the vehicle, be sure the belt is out of the way and will not get closed in the door.

All seat belts have an emergency locking retractor. In normal driving, the retractor lets you move freely in your seat while it keeps some tension on the belt. During a collision or sudden stop, the retractor automatically locks the belt to help restrain your body.

The seat belts in all positions except the driver's have an additional locking mechanism that must be activated to secure a child seat (see page 43).

If the shoulder part of the belt is pulled all the way out, the locking mechanism will activate. The belt will retract, but it will not allow the passenger to move freely.

To deactivate the locking mechanism, unlatch the buckle, and let the seat belt fully retract. To refasten the belt, pull it out only as far as needed.

Automatic Seat Belt Tensioners

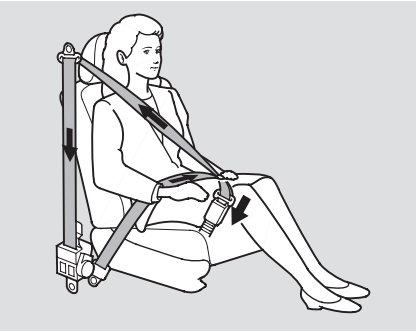

For added protection, the front seat belts are equipped with automatic seat belt tensioners. When activated, the tensioners immediately tighten the belts to help hold the driver and a front passenger in place.

The tensioners are designed to activate primarily in frontal collisions, and they should activate in any collision severe enough to cause front-airbag inflation.

However, the tensioners can be activated during a collision in which the front airbags do not deploy. In this case, the airbags would not be needed, but the additional restraint could be helpful.

When the tensioners are activated, the seat belts will remain tight until they are unbuckled in the normal manner.

Seat Belt Maintenance

For safety, you should check the condition of your seat belts regularly.

Pull each belt out fully and look for frays, cuts, burns, and wear. Check that the latches work smoothly and the belts retract easily. Any belt that is not in good condition or working properly will not provide good protection and should be replaced as soon as possible.

Honda provides a lifetime warranty on seat belts for U.S. models. See your *Honda Warranty Information* booklet for details.

CONTINUED

Additional Information About Your Seat Belts

If a seat belt is worn during a crash, it must be replaced by the dealer. A belt that has been worn during a crash may not provide the same level of protection in a subsequent crash.

The dealer should also inspect the anchors for damage and replace them if needed. If the automatic seat belt tensioners activate during a crash, they must be replaced.

For information on how to clean your seat belts, see page 240 .

⚠ WARNING

Not checking or maintaining seat belts can result in serious injury or death if the seat belts do not work properly when needed.

Check your seat belts regularly and have any problem corrected as soon as possible.

Airbag System Components

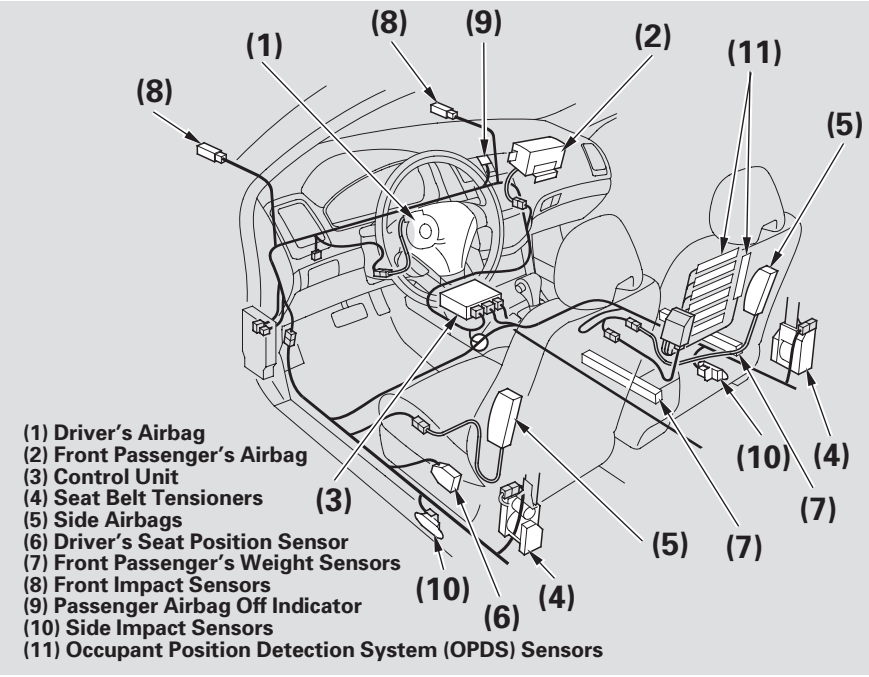

Your airbag system includes:

- Two SRS (Supplemental Restraint System) front airbags. The driver's airbag is stored in the center of the steering wheel; the front passenger's airbag is stored in the dashboard. Both are marked "SRS AIRBAG" (see page 22).

- On models equipped with two side airbags, one for the driver and one for a front passenger. The airbags are stored in the outer edges of the seat-backs. Both are marked "SIDE AIRBAG" (see page 26).

- On models equipped with two side curtain airbags, one for each side of the vehicle. The airbags are stored in the front, center, and rear pillars. The front and rear pillars on both sides are marked "SIDE CURTAIN AIRBAG" (see page 27).

CONTINUED

- Automatic seat belt tensioners (see page 19).
- Sensors that can detect a moderate to severe front impact, or side impact in models equipped with side airbags.
- A sophisticated electronic system that continually monitors and records information about the sensors, the control unit, the airbag activators, and driver and front passenger seat belt use when the ignition is in the ON (II) position.
- A driver's seat position sensor that monitors the seat position. If the seat is too far forward, the airbag will inflate with less force (see page 25).
- Weight sensors that monitor the weight on the front passenger's seat. These prevent the passenger's front airbag from inflating if the weight is less than about 65 lbs (30 kg) (see page 25).
- An indicator on the instrument panel that alerts you to a possible problem with your airbags (see page 27).
- An indicator on the dashboard that alerts you that the passenger's front airbag has been turned off (see page 29).
- On models equipped, an indicator on the instrument panel that alerts you that the front passenger's side airbag has been turned off (see page 28).
- Emergency backup power in case your vehicle's electrical system is disconnected in a crash.

How Your Front Airbags Work

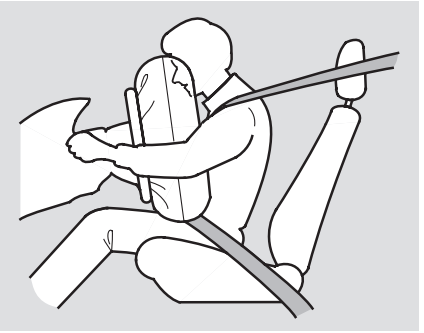

If you ever have a moderate to severe frontal collision, sensors will detect the vehicle's rapid deceleration. If the rate of deceleration is high enough, the control unit will instantly inflate the driver's and front passenger's front airbags, at the appropriate time and with the force needed.

During a frontal crash, your seat belt restrains your lower body and torso, and the airbag helps protect your head and chest.

Although both airbags normally inflate within a split second of each other, it is possible for only one airbag to deploy.

This can happen if the severity of a collision is at the margin, or threshold, that determines whether or not the airbags will deploy. In such cases, the seat belt will provide sufficient protection, and the supplemental protection offered by the airbag would be minimal.

Only the driver's airbag can deploy if there is no passenger in the front seat, or if the advanced airbag system has turned the passenger's airbag off (see page 24).

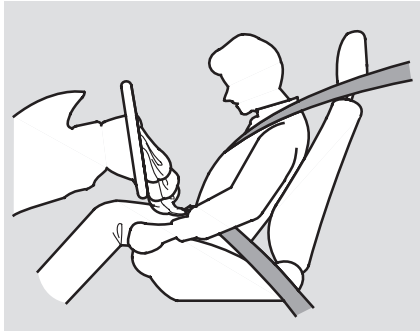

After inflating, the front airbags will immediately deflate, so they won't interfere with the driver's visibility, or the ability to steer or operate other controls.

The total time for inflation and deflation is one-tenth of a second, so fast that most occupants are not aware that the airbags deployed until they see them lying in their laps.

After a crash, you may see what looks like smoke. This is actually powder from the airbag's surface. Although the powder is not harmful, people with respiratory problems may experience some temporary discomfort. If this occurs, get out of the vehicle as soon as it is safe to do so.

CONTINUED

Dual-Stage Airbags
Your front airbags are dual-stage airbags. This means they have two inflation stages that can be ignited sequentially or simultaneously, depending on crash severity.

In a ***more severe*** crash, both stages will ignite simultaneously to provide the quickest and greatest protection.

In a ***less severe*** crash, one stage will ignite first, then the second stage will ignite a split second later. This provides longer airbag inflation time with a little less force.

Dual-Threshold Airbags
Your front airbags are also dual-threshold airbags. Airbags with this feature have two deployment thresholds that depend on whether or not the occupant is wearing a seat belt.

If the occupant's belt is ***not latched***, the airbag will deploy at the same threshold as a conventional airbag because the occupant would need extra protection.

It the occupant's belt is ***latched***, the airbag will inflate at a slightly higher threshold, when the airbag would be needed to supplement the protection provided by the seat belt.

Advanced Airbags
Your front airbags are also advanced airbags. The main purpose of this feature is to prevent airbag-caused injuries to short drivers and children who ride in front.

For the advanced airbags to work properly, occupants must sit upright and wear their seat belts properly. If a child seat is installed in the front, it must be properly secured.

In addition, do not spill any liquids, cover the sensors, or put any cargo or metal objects under the front seats. Ask rear seat passengers to not put their feet under the front seats. Any of these actions could damage the sensors or prevent them from working properly.

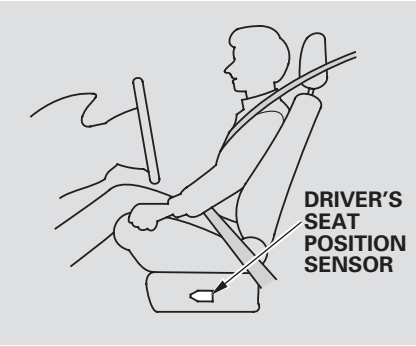

The driver's advanced front airbag system includes a seat position sensor under the seat. If the seat is positioned too far forward, the airbag will inflate sequentially, regardless of the severity of the impact.

If there is a problem with the seat position sensor, the SRS indicator will come on in the instrument panel. In this case, the driver's airbag will inflate in the normal manner during a crash regardless of the driver's seating position.

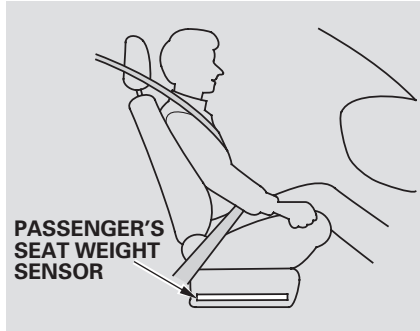

The passenger's advanced front airbag system has weight sensors under the seat. If the sensors detect a total weight on the seat of about 65 lbs (30 kg) or less, the system will automatically turn the passenger's front airbag off.

When the airbag is turned off, an indicator in the center of the dashboard will come on indicating "Passenger Airbag Off" (see page 29).

If there is no passenger in the front seat, the ***airbag will be off*** but the indicator ***will not come on***.

CONTINUED

To ensure that the passenger's advanced front airbag system will work properly, ***do not do anything that would increase or decrease the weight on the front passenger's seat.*** This includes:

- A rear passenger pushing or pulling on the back of the passenger's seat.
- Moving the front seat forcibly back against cargo on the seat or floor behind it.
- Hanging heavy items on the front passenger seat, or placing heavy items in the seat-back pocket.
- Make sure the rear floor mat is hooked to the floor mat anchor. If not, the floor mat will prevent the seat operation and the sensors may not work properly.

How Your Side Airbags Work

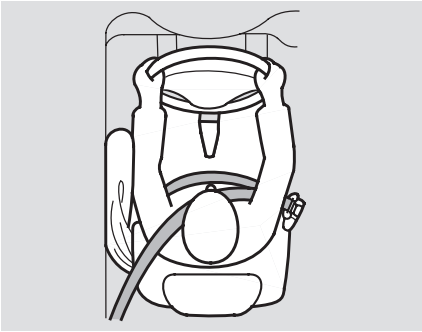

Only on models equipped with side airbags

If you ever have a moderate to severe side impact, the sensors will detect rapid deceleration and signal the control unit to instantly inflate either the driver's or the passenger's side airbag.

Only one airbag will deploy during a side impact. If the impact is on the passenger's side, the passenger's side airbag will deploy even if there is no passenger.

The passenger's side airbag has a cutoff system designed to turn off the passenger's side airbag if a child's head is in the airbag's deployment path (see page 28).

To get the best protection from the side airbags, front seat occupants should wear their seat belts and sit upright and well back in their seats.

If the side airbag off indicator comes on, have the passenger sit upright. Once the passenger is out of the deployment path of the side airbag, the system will turn the airbag back on and the indicator will go out.

A front seat passenger should not use a cushion or other object as a backrest. It may prevent the cutoff system from working properly.

How Your Side Curtain Airbags Work

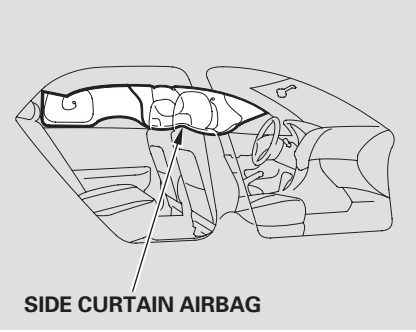

Standard on U.S. EX-V6 model

Your vehicle is equipped with side curtain airbags. These airbags are stored in the front, center, and rear pillars on both sides. The front and rear pillars on both sides are marked "SIDE CURTAIN AIRBAG."

In a moderate to severe side impact, sensors will detect rapid deceleration and signal the control unit to instantly inflate the side curtain airbag on the driver's or the passenger's side of the vehicle. If the impact is on the passenger's side, the passenger's side curtain airbag will inflate even if there are no occupants on that side of the vehicle.

To get the best protection from the side curtain airbags, occupants should wear their seat belts and sit upright and well back in their seats.

How the SRS Indicator Works

The SRS indicator alerts you to a potential problem with your front airbags, the driver's seat position sensor and the front passenger's weight sensors (see page 24), or front seat belt tensioners (see page 19).

On models with side airbags, this indicator will also alert you to a potential problem with your side airbags, the passenger's side airbag automatic cutoff system (see page 28), or the side curtain airbags.

When you turn the ignition switch to ON (II), this indicator will come on briefly then go out. This tells you that the system is working properly.

CONTINUED

If the indicator comes on at any other time, or does not come on at all, you should have the system checked by your dealer. For example:

- If the SRS indicator does not come on after you turn the ignition switch to ON (II).
- If the indicator stays on after the engine starts.
- If the indicator comes on or flashes on and off while you drive.

If you see any of these indications, the airbags and the seat belt tensioners may not work properly when you need them.

⚠ WARNING

Ignoring the SRS indicator can result in serious injury or death if the airbag systems or tensioners do not work properly.

Have your vehicle checked by a dealer as soon as possible if the SRS indicator alerts you to a possible problem.

How the Side Airbag Off Indicator Works

Only on models equipped with side airbags

SIDE AIRBAG OFF

This indicator alerts you that the passenger's side airbag has been automatically shut off. It does ***not*** mean there is a problem with your side airbags.

To reduce the risk of injury from an inflating side airbag, your vehicle has an automatic cutoff system for the passenger's side airbag.

Although Honda does not encourage children to ride in front, this system is designed to shut off the side airbag if a child leans sideways and the child's head is in the side airbag deployment path.

If a short adult leans sideways, or a larger adult slouches and leans sideways into the side airbag deployment path, the system may also shut off the side airbag.

When you turn the ignition switch to ON (II), the indicator should come on briefly and go out (see page 59). If it doesn't light, stays on, or comes on while driving without a passenger in the front seat, have the system checked.

How the Passenger Airbag Off Indicator Works

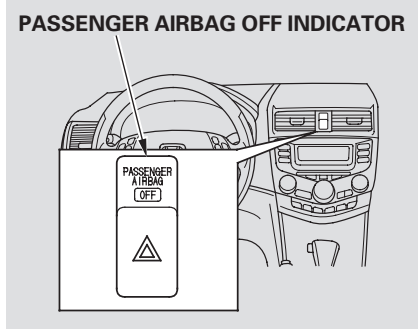

This indicator alerts you that the passenger's front airbag has been shut off. It does not mean there is a problem with the airbag.

To reduce the chance of airbag-caused injuries, the system shuts off the passenger's front airbag when the total weight on the front passenger's seat is about 65 lbs (30 kg) or less.

If no one is riding in the front passenger's seat, the airbag will be automatically shut off, but the indicator will not come on.

However, if the indicator comes on with no passenger in the front, or with an adult in the seat, there may be a problem with the advanced airbag system. Have the vehicle checked by the dealer as soon as possible.

The Passenger Airbag Off indicator may also come on and off repeatedly if total weight on the seat is near the airbag cutoff threshold (65 lbs or 30 kg).

CONTINUED

If this happens, have the passenger ride properly restrained in the back seat. If the passenger must ride in front, move the seat as far to the rear as possible, have the passenger sit upright and wear the seat belt properly.

This indicator may come on and off repeatedly if objects are placed on the front passenger's seat, or if the interior temperature of the vehicle changes suddenly when a door is opened.

See page 24 for more information about the passenger's advanced front airbag.

Airbag Service

Your airbag systems are virtually maintenance-free, and there are no parts you can safely service. However, you must have your vehicle serviced if:

- ***An airbag ever inflates.*** Any airbag that has deployed must be replaced along with the control unit and other related parts. If a front airbag inflates, the seat belt tensioners must also be replaced. Do not try to remove or replace any airbag by yourself. This must be done by a Honda dealer or a knowledgeable body shop.

- ***The SRS indicator alerts you to a problem.*** Take your vehicle to an authorized Honda dealer as soon as possible. If you ignore this indication, your airbags may not operate properly.

- ***If your vehicle has a moderate to severe impact, and even if your airbags do not inflate,*** your dealer should inspect the driver's seat position sensor and the front passenger's weight sensors to make sure they are operating properly.

Additional Safety Precautions

- ***Do not attempt to deactivate your airbags.*** Together, airbags and seat belts provide the best protection.

- ***Do not tamper with airbag components or wiring for any reason.*** Tampering could cause the airbags to deploy, possibly causing very serious injury.

- ***Do not expose the front seat-backs to liquid.*** If water or another liquid soaks into a seat-back, it can prevent the side airbag cutoff system from working properly.

- ***Do not place any items under the front seats.*** This could make the driver's seat position sensor and the front passenger's weight sensors ineffective.

- ***Do not place the right rear floor mat under the front passenger's seat.*** This could make the front passenger's weight sensors ineffective. Make sure the right rear floor mat is hooked over the floor mat anchor (see page 240).

- ***Do not cover or replace front seat-back covers without consulting a Honda dealer.*** Improperly replacing or covering front seat-back covers can prevent your side airbags from inflating during a side impact.

- ***Do not modify the front seats.*** This could make the driver's seat position sensor and the front passenger's weight sensors ineffective.

- ***Do not do anything that would increase or decrease weight on the front passenger's seat.*** Pushing or pulling on the back of the seat, placing heavy items in the back seat pocket, pushing cargo against the seat, or hanging heavy items on the seat back can interfere with the proper operation of the passenger's advanced front airbag.

- ***Do not remove or modify a front seat without consulting a Honda dealer.*** This could make the driver's seat position sensor or the front passenger's weight sensors ineffective. If it is necessary to remove or modify a front seat to accommodate a person with disabilities, first contact American Honda at 800-999-1009.

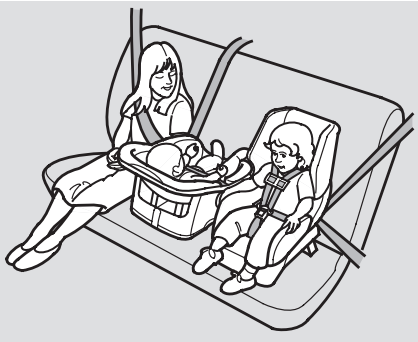

Children depend on adults to protect them. However, despite their best intentions, many adults do not know how to properly protect child passengers.

⚠WARNING

Children who are unrestrained or improperly restrained can be seriously injured or killed in a crash.

Any child too small for a seat belt should be properly restrained in a child seat. A larger child should be properly restrained with a seat belt and use a booster if necessary.

If you have children, or if you ever need to drive with a child in your vehicle, be sure to read this section. It begins with important general guidelines, then presents special information for infants, small children, and larger children.

All Children Must Be Restrained

Each year, many children are injured or killed in vehicle crashes because they are either unrestrained or not properly restrained. In fact, vehicle accidents are the number one cause of death of children ages 12 and under.

To reduce the number of child deaths and injuries, every state and Canadian province requires that infants and children be properly restrained when they ride in a vehicle.

Infants and small children must be restrained in an approved child seat that is properly secured to the vehicle (see pages 39 — 46).

Larger children must be restrained with a lap/shoulder belt and ride on a booster until the seat belt fits them properly (see pages 47 — 50).

All Children Should Sit in the Back Seat
According to accident statistics, children of all ages and sizes are safer when they are restrained in the back seat. The National Highway Traffic Safety Administration and Transport Canada recommend that all children age 12 and under be properly restrained in the back seat.

Children who ride in back are less likely to be injured by striking interior vehicle parts during a collision or hard braking. Also, children cannot be injured by an inflating airbag when they ride in the back.

The Passenger's Front Airbag Can Pose Serious Risks
Front airbags have been designed to help protect adults in a moderate to severe frontal collision. To do this the passenger's front airbag is quite large and it can inflate with enough force to cause very serious injuries.

To help prevent airbag-caused injuries to children, this vehicle has an advanced airbag system.

With this system, the front passenger's airbag is turned off if sensors detect a total weight of less than about 65 lbs (30 kg) on the seat (see pages 24 — 26 for additional information about how the front passenger's advanced airbag works).

Even if the passenger's front airbag is turned off, we strongly recommend that children age 12 and under ride properly restrained in a back seat where they will be safer.

CONTINUED

U.S. Models

To remind you of the passenger's front airbag hazards, and that children must be properly restrained in the back seat, your vehicle has warning labels on the dashboard and on the driver's and front passenger's visors. Please read and follow the instructions on these labels.

Canadian Models

To remind you of the front airbag hazards, your vehicle has warning labels on the driver's and front passenger's visors. Please read and follow the instructions on these labels.

CAUTION
TO AVOID SERIOUS INJURY:
- FOR MAXIMUM SAFETY PROTECTION IN ALL TYPES OF CRASHES, YOU MUST ALWAYS WEAR YOUR SAFETY BELT.
- DO NOT INSTALL REARWARD-FACING CHILD SEATS IN ANY FRONT PASSENGER SEAT POSITION.
- DO NOT SIT OR LEAN UNNECESSARILY CLOSE TO THE AIR BAG.
- DO NOT PLACE ANY OBJECTS OVER THE AIR BAG OR BETWEEN THE AIR BAG AND YOURSELF.
- SEE THE OWNER'S MANUAL FOR FURTHER INFORMATION AND EXPLANATIONS.

PRÉCAUTION:
POUR EVITER DES BLESSURES GRAVES:
- POUR PROFITER D'UNE PROTECTION MAXIMALE LORS D'UNE COLLISION BOUCLEZ TOUJOURS VOTRE CEINTURE DE SECURITE.
- N'INSTALLEZ JAMAIS UN SIEGE POUR ENFANTS FAISANT FACE A L'ARRIERE SUR LE SIEGE DU PASSAGER AVANT.
- NE VOUS APPUYEZ PAS ET NE VOUS ASSEYEZ PAS PRES DU COUSSIN GONFLABLE.
- NE DEPOSEZ AUCUN OBJET SUR LE COUSSIN GONFLABLE OU ENTRE LE COUSSIN GONFLABLE ET VOUS.
- LISEZ LE GUIDE UTILISATEUR POUR DE PLUS AMPLES RENSEIGNEMENTS.

If You Must Drive with Several Children

Your vehicle has three seating positions in the back seat where children can be properly restrained. If you ever have to carry four children in your vehicle, and a child must ride in front:

- Place the largest child in the front seat, provided the child is large enough to wear the lap/shoulder belt properly (see page 47).
- Move the vehicle seat as far to the rear as possible (see page 11).
- Have the child sit upright and well back in the seat (see page 15).
- Make sure the seat belt is properly positioned and secured (see page 14).

If a Child Requires Close Attention

Many parents say they prefer to put an infant or small child in the front passenger seat so they can watch the child, or because the child requires attention.

Placing a child in the front seat exposes the child to hazards in a frontal collision, and paying close attention to a child distracts the driver from the important tasks of driving, placing both of you at risk.

If a child requires close physical attention or frequent visual contact, we strongly recommend that another adult ride with the child in the back seat. The back seat is far safer for a child than the front.

Additional Safety Precautions

- Never hold an infant or child on your lap. If you are not wearing a seat belt in crash, you could be thrown forward and crush the child against the dashboard or a seat-back. If you are wearing a seat belt, the child can be torn from your arms and be seriously hurt or killed.

- Never put a seat belt over yourself and a child. During a crash, the belt could press deep into the child and cause serious or fatal injuries.

- Never let two children use the same seat belt. If they do, they could be very seriously injured in a crash.

- Do not leave children alone in a vehicle. Leaving children without adult supervision is illegal in most states and Canadian provinces, and can be very hazardous.

  For example, infants and small children left in a vehicle on a hot day can die from heatstroke. A child left alone with the key in the ignition can accidentally set the vehicle in motion, possibly injuring themselves or others.

- Lock both doors and the trunk when your vehicle is not in use. Children who play in vehicles can accidentally get trapped inside the trunk and be seriously injured or could die. Teach your children not to play in or around vehicles. Know how to operate the emergency trunk opener and decide if your children should be shown how to use this feature (see page 82).

- Keep vehicle keys/remote transmitters out of the reach of children. Even very young children learn how to unlock vehicle doors, turn on the ignition, and open the trunk, which can lead to accidental injury or death.

Protecting Infants

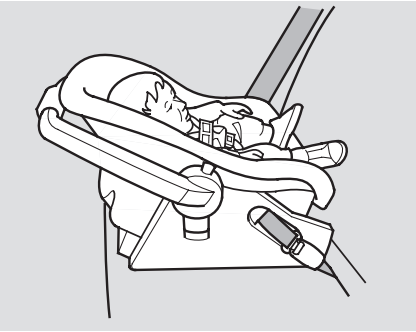

Child Seat Type
Only a rear-facing child seat provides proper support for a baby's head, neck, and back.

An infant must be properly restrained in a rear-facing, reclining child seat until the child reaches the seat maker's weight or height limit for the seat, and the child is at least one year old.

⚠ WARNING

Placing a rear-facing child seat in the front seat can result in serious injury or death during a collision.

Always place a rear-facing child seat in the back seat, not the front.

Two types of seats may be used: a seat designed exclusively for infants, or a convertible seat used in the rear-facing, reclining mode.

Do not put a rear-facing child seat in a forward-facing position. If placed facing forward, an infant could be very seriously injured during a frontal collision.

Child Seat Placement
A rear-facing child seat should always be installed in a back seat, not in the front. Even with adbanced airbags, which can automatically turn the passenger's front airbag off (see page 24), a back seat is the safest place for an infant.

When properly installed, a rear-facing child seat may prevent the driver or a front passenger from moving the seat as far back as recommended, or from locking the seat-back in the desired position.

CONTINUED

Or it could push against the front-passenger's seat-back, interfering with the proper operation of the passenger's advanced front airbag (see pages 24 — 26).

In any of these situations, we strongly recommend that you install the child seat in a different back seating position or get a smaller rear-facing child seat.

Protecting Small Children

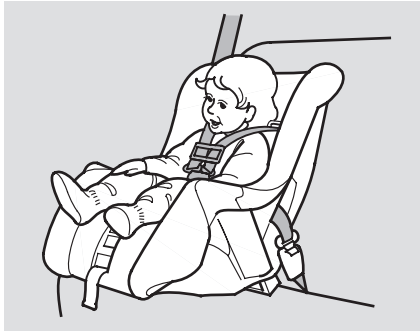

Child Seat Type
A child who is at least one year old, and who fits within the child seat maker's weight and height limits, should be restrained in a forward-facing, upright child seat.

Of the different seats available, we recommend those that have a five-point harness system as shown.

⚠WARNING

Placing a forward-facing child seat in the front seat can result in serious injury or death if the front airbag inflates.

If you must place a forward-facing child seat in front, move the vehicle seat as far back as possible, and properly restrain the child.

We also recommend that a small child uses the child seat as long as possible, until the child reaches the weight or height limit for the seat.

Child Seat Placement

We strongly recommend placing a forward-facing child seat in a back seat, not the front. Even with advanced airbags, which can automatically turn the passenger's front airbag off (see page 24), a back seat is the safest place for a small child.

If it is necessary to put a forward-facing child seat in the front, move the vehicle seat as far to the rear as possible, be sure the child seat is firmly secured to the vehicle, and the child is properly strapped in the seat.

Selecting a Child Seat

When buying a child seat, you need to choose between a conventional child seat, or one designed for use with the Lower Anchors and Tethers for Children (LATCH) system.

Conventional child seats must be secured to a vehicle with a seat belt, whereas LATCH-compatible seats are secured by attaching the seat to hardware built into the two outer seating positions in the back seat.

Since LATCH-compatible child seats are easier to install and reduce the possibility of improper installation, we recommend selecting this style.

We also recommend selecting a LATCH-compatible seat with a rigid, rather than a flexible, anchor (see page 41).

In seating positions and vehicles not equipped with LATCH, a LATCH-compatible child seat can be installed using a seat belt.

Whatever type of seat you choose, to provide proper protection, a child seat should meet three requirements:

1. ***The child seat should meet U.S. or Canadian Motor Vehicle Safety Standard 213.*** Look for FMVSS 213 or CMVSS 213 on the box.

2. ***The child seat should be of the proper type and size to fit the child.*** Rear-facing for infants, forward-facing for small children.

3. ***The child seat should fit the vehicle seating position (or positions) where it will be used.***

Before purchasing a conventional child seat, or using a previously purchased one, we recommend that you test the seat in the specific vehicle seating position, or positions, where the seat will be used.

Installing a Child Seat

After selecting a proper child seat, and a good place to install the seat, there are three main steps in installing the seat:

1. ***Properly secure the child seat to the vehicle.*** All child seats must be secured to the vehicle with the lap part of a lap/shoulder belt or with the LATCH (Lower Anchors and Tethers for Children) system. A child whose seat is not properly secured to the vehicle can be endangered in a crash.

2. ***Make sure the child seat is firmly secured.*** After installing a child seat, push and pull the seat forward and from side to side to verify that it is secure.

A child seat secured with a seat belt should be installed as firmly as possible. However, it does not need to be “rock solid”. Some side-to-side movement can be expected and should not reduce the child seat’s effectiveness.

If the child seat is not secure, try installing it in a different seating position, or use a different style of child seat that can be firmly secured.

3. ***Secure the child in the back seat.*** Make sure the child is properly strapped in the child seat according to the child seat maker’s instructions. A child who is not properly secured in a child seat can be seriously injured in a crash.

The following pages provide guidelines on how to properly install a child seat. A forward-facing child seat is used in all examples, but the instructions are the same for a rear-facing child seat.

Installing a Child Seat with LATCH

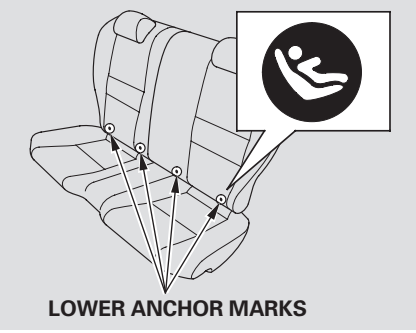

Your vehicle is equipped with LATCH (Lower Anchors and Tethers for Children) at the outer rear seats. The lower anchors are located between the seat-back and seat bottom, and are to be used only with a child seat designed for use with LATCH.

The location of each lower anchor is marked with a small illustrated circle above the point.

To install a LATCH-compatible child seat:

1. Move the seat belt buckle or center seat belt away from the lower anchors.

2. Make sure there are no objects near the anchors that could prevent a secure connection between the child seat and anchors.

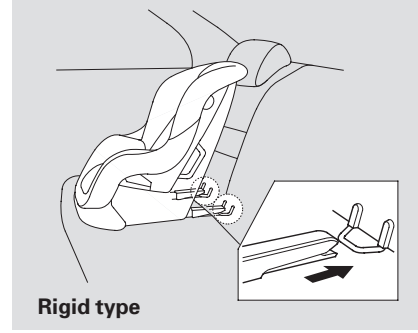

3. Place the child seat on the vehicle seat, and attach the seat to the lower anchors according to the child seat maker's instructions.

Some LATCH-compatible seats have a rigid-type connection as shown above.

CONTINUED

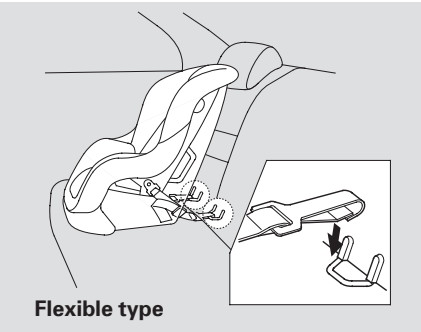

Other LATCH-compatible seats have a flexible-type connection as shown above.

4. Whatever type you have, follow the child seat maker's instructions for adjusting or tightening the fit.

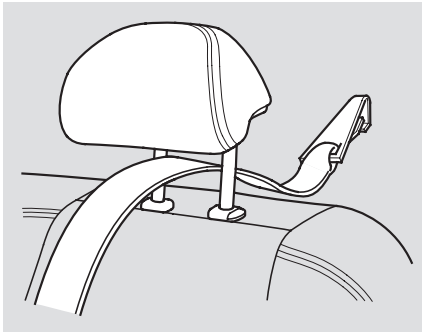

5. Route the tether strap through the legs of the head restraint, then attach the hook to the anchorage point as shown.

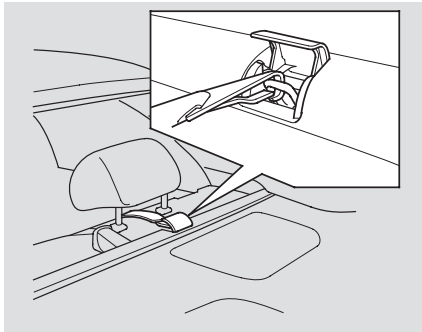

6. Make sure the strap is not twisted, then tighten the strap according to the child seat maker's instructions.

7. Push and pull the child seat forward and from side-to-side to verify that it is secure.

Installing a Child Seat with a Lap/ Shoulder Belt

When not using the LATCH system, all child seats must be secured to the vehicle with the lap part of a lap/ shoulder belt.

In addition, the lap/shoulder belts in the rear seat and the front passenger seat have a locking mechanism that must be activated to secure a child seat.

1. With the child seat in the desired seating position, route the belt through the child seat according to the seat maker's instructions, then insert the latch plate into the buckle.

2. To activate the lockable retractor, slowly pull the shoulder part of the belt all the way out until it stops, then let the belt feed back into the retractor.

3. After the belt has retracted, tug on it. If the belt is locked, you will not be able to pull it out. If you can pull the belt out, it is not locked, and you will need to repeat these steps.

CONTINUED

4. After confirming that the belt is locked, grab the shoulder part of the belt near the buckle and pull up to remove any slack from the lap part of the belt. Remember, if the lap part of the belt is not tight, the child seat will not be secure.

   To remove slack, it may help to put weight on the child seat, or push on the back of the seat while pulling up on the belt.

5. Push and pull the child seat forward and from side to side to verify that it is firmly secured. If the child seat is not secure, unlatch the belt, allow it to retract fully, then repeat these steps.

To deactivate the locking mechanism and remove a child seat, unlatch the buckle, unroute the seat belt, and let the belt fully retract.

Installing a Child Seat with a Tether

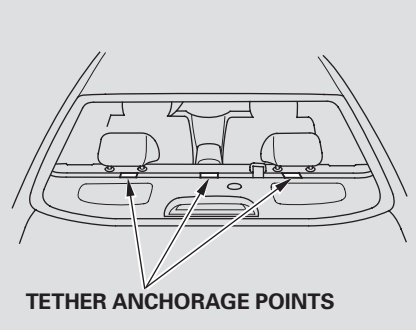

A child seat with a tether can be installed in any seating position in the back seat, using one of the anchorage points shown above.

Since a tether can provide additional security to the lap/shoulder belt installation, we recommend using a tether whenever one is required or available. (Tethers are required in Canada.)

Using an Outer Anchorage Point

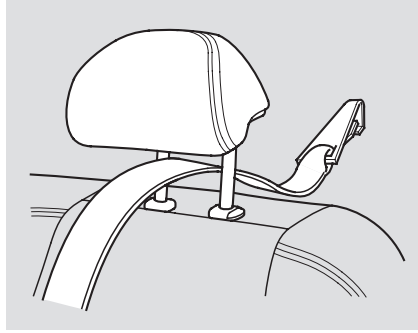

1. After securing the child seat in the desired position (see page 43), lift the head restraint, then route the tether strap over the top of the seat-back and through the head restraint legs.

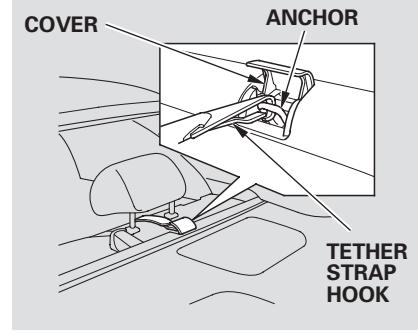

2. Lift the anchor point lid, then attach the tether strap hook to the anchor, making sure the strap is not twisted.

3. Tighten the strap according to the seat maker's instructions.

CONTINUED

Using the Center Anchorage Point

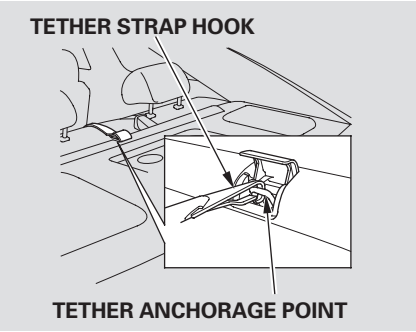

1. After properly securing the child seat (see page 43), route the tether strap over the top of the seat-back.

2. Attach the tether strap hook to the anchor, making sure the strap is not twisted, then tighten the strap according to the seat-maker's instructions.

When a child reaches the recommended weight or height limit for a forward-facing child seat, the child should sit in the back seat on a booster and wear a lap/shoulder belt.

The following pages give instructions on how to check proper seat belt fit, what kind of booster seat to use if one is needed, and important precautions for a child who must sit in front.

⚠ WARNING

Allowing a large child age 12 or under to sit in front can result in injury or death if the passenger's front airbag inflates.

If a large child must ride in front, move the vehicle seat as far back as possible, use a booster seat if needed, have the child sit up properly and wear the seat belt properly.

Checking Seat Belt Fit

To determine if a lap/shoulder belt properly fits a child, have the child put on the seat belt, then ask yourself:

1. Does the child sit all the way back against the seat?
2. Do the child's knees bend comfortably over the edge of the seat?
3. Does the shoulder belt cross between the child's neck and arm?
4. Is the lap part of the belt as low as possible, touching the child's thighs?
5. Will the child be able to stay seated like this for the whole trip?

If you answer yes to all these questions, the child is ready to wear the lap/shoulder belt correctly. If you answer no to any question, the child needs to ride on a booster seat.

Using a Booster Seat

A child who has outgrown a forward-facing child seat should ride in the back seat and use a booster seat until the lap/shoulder belt fits them properly without the booster.

Some states also require children to use a booster until they reach a given age or weight (e.g., 6 years or 60 lbs). Be sure to check current laws in the state or states where you intend to drive.

Booster seats can be high-back or low-back. Whichever style you select, make sure the booster meets federal safety standards (see page 40) and that you follow the booster seat maker's instructions.

If a child who uses a booster must ride in front, move the vehicle seat as far to the rear as possible, and be sure the child is wearing the seat belt properly.

A child may continue using a booster seat until the tops of their ears are even with the top of the vehicle's or booster's seat-back. A child of this height should be tall enough to use the lap/shoulder belt without a booster.

When Can a Larger Child Sit in Front

The National Highway Traffic Safety Administration and Transport Canada recommend that all children ages 12 and under be properly restrained in the back seat.

Even with advanced front airbag, the back seat is the safest place for a child of any age or size.

If the passenger's front airbag is on, and it inflates in a moderate to severe frontal collision, the airbag can cause serious injuries to a child who is unrestrained, improperly restrained, sitting too close to the airbag, or out of position.

The side airbag also poses risks. If any part of a larger child's body is in the path of a deploying side airbag, the child could receive possibly serious injuries.

Of course, children vary widely. And while age may be one indicator of when a child can safely ride in front. There are other important factors you should consider.

Maturity
To safely ride in front, a child must be able to follow the rules, including sitting properly, and wearing the seat belt properly throughout a ride.

Physical Size
Physically, a child must be large enough for the lap/shoulder belt to properly fit (see pages 14 and 47). If the seat belt does not fit properly, with or without the child sitting on a booster, the child should not sit in front.

If you decide that a child can safely ride up front, be sure to:

- Carefully read the owner's manual and make sure you understand all seat belt instructions and all safety information.
- Move the vehicle seat to the rear-most position.
- Have the child sit up straight, back against the seat, and feet on or near the floor.
- Check that the child's seat belt is properly and securely positioned.
- Supervise the child. Even mature children sometimes need to be reminded to fasten the seat belts or sit properly.

CONTINUED

Additional Safety Precautions

- ***Do not let a child wear a seat belt across the neck.*** This could result in serious neck injuries during a crash.

- ***Do not let a child put the shoulder part of a seat belt behind the back or under the arm.*** This could cause very serious injuries during a crash. It also increases the chance that the child will slide under the belt in a crash and be injured.

- ***Two children should never use the same seat belt.*** If they do, they could be very seriously injured in a crash.

- ***Do not put any accessories on a seat belt.*** Devices intended to improve a child's comfort or reposition the shoulder part of a seat belt can make the belt less effective, and increase the chance of serious injury in a crash.

Your vehicle's exhaust contains carbon monoxide gas. You should have no problem with carbon monoxide entering the vehicle in normal driving if you maintain your vehicle properly.
Have the exhaust system inspected for leaks whenever:

- The vehicle is raised for an oil change.
- You notice a change in the sound of the exhaust.
- The vehicle was in an accident that may have damaged the underside.

⚠ WARNING

Carbon monoxide gas is toxic. Breathing it can cause unconsciousness and even kill you.

Avoid any enclosed areas or activities that expose you to carbon monoxide.

High levels of carbon monoxide can collect rapidly in enclosed areas, such as a garage. Do not run the engine with the garage door closed. Even with the door open, run the engine only long enough to move the vehicle out of the garage.

With the trunk lid open, air flow can pull exhaust gas into your vehicle's interior and create a hazardous condition. If you must drive with the trunk lid open, open all the windows and set the heating and cooling system/climate control system as shown below.

If you must sit in your parked vehicle, even in an unconfined area, with the engine running, adjust the heating and cooling system/climate control system as follows:

1. Select the Fresh Air mode.
2. Select the mode.
3. Turn the fan on high speed.
4. Set the temperature control to a comfortable setting.

Safety Labels

These labels are in the locations shown. They warn you of potential hazards that could cause serious injury. Read these labels carefully.

If a label comes off or becomes hard to read (except for the U.S. dashboard label which is removed by the owner), contact your Honda dealer for a replacement.

DASHBOARD

U.S. models only

This Vehicle is Equipped with Advanced Air Bags

Even with Advanced Air Bags
Children can be killed or seriously injured by the air bag.
The back seat is the safest place for children.
Always use seat belts and child restraints.
See owner's manual for more information about air bags.

To be removed by owner only.

HOOD

On models without side airbags

⚠WARNING

The airbag inflator is explosive and, if accidentally deployed, can seriously hurt you.
Follow Service Manual instructions carefully.

⚠ATTENTION

Le gonfleur SRS est explosible, et s'il se déploie accidentellement, il risque de provoquer des blessures graves ou de tuer.
Suivre attentivement les Instructions du manuel d'entretien.

On models with side airbags

⚠WARNING

Accidental deployment can seriously hurt or kill you.
Follow Service Manual instructions carefully.

⚠ATTENTION

Un déploiement accidentel risque de causer de graves blessures, voire mort.
Suivre attentivement les Instructions du manuel de réparation.

On models with side curtain airbags

U.S. models

SUPPLEMENTAL RESTRAINT SYSTEM (SRS)

This vehicle is equipped with front airbags, side airbags (in the front seats), front (driver) inflator, and side curtain airbags.

All SRS electrical wiring and connectors are colored yellow.

Tampering with, disconnecting or using test equipment on the SRS wiring can make the system inoperative or cause accidental deployment.

⚠WARNING

Accidental deployment can seriously hurt or kill you.
Follow Service Manual instructions carefully.

Canadian models

SUPPLEMENTAL RESTRAINT SYSTEM (SRS)

This vehicle is equipped with front airbags, side airbags (in the front seats), front (driver) inflator, and side curtain airbags.

All SRS electrical wiring and connectors are colored yellow.

Tampering with, disconnecting or using test equipment on the SRS wiring can make the system inoperative or cause accidental deployment.

⚠WARNING

Accidental deployment can seriously hurt or kill you.
Follow Service Manual instructions carefully.

SYSTEME DE RETENUE SUPPLEMENTAIRE (SRS)

Cette véhicule est équipé en de coussins gonflables frontaux, coussins gonflables latéraux (en de coussins gonflables latéraux en type rideau) et coussin gonflable frontal (côté conducteur).

Tous les fils électriques et connecteurs du système SRS sont jaunes.

La manipulation, le débranchement, ou l'utilisation d'équipement de test du système SRS peut rendre fonctionnel du système ou causer un déclenchement accidentel.

⚠ATTENTION

Un déploiement accidentel risque de causer graves blessures, voire la mort.
Suivre attentivement les instructions du manuel de réparation.

RADIATOR CAP

DANGER
WARNUNG
危 険
▶ NEVER OPEN WHEN HOT.
Hot coolant will scald you.
▶ N'OUVREZ PAS QUAND CHAUD.
▶ NICHT BEI HEISSEM MOTOR ÖFFNEN.
▶ 熱い時あけないで下さい。
▶ 未趁热开。
1.1

SUN VISOR

U.S. models

⚠ WARNING

EVEN WITH ADVANCED AIR BAGS

- Children can be killed or seriously injured by the air bag
- The back seat is the safest place for children
- Never put a rear-facing child seat in the front
- Always use seat belts and child restraints
- See owner's manual for more information about air bags

Canadian models

CAUTION	PRÉCAUTION:
TO AVOID SERIOUS INJURY: • FOR MAXIMUM SAFETY PROTECTION IN ALL TYPES OF CRASHES, YOU MUST ALWAYS WEAR YOUR SAFETY BELT. • DO NOT INSTALL REARWARD-FACING CHILD SEATS IN ANY FRONT PASSENGER SEAT POSITION. • DO NOT SIT OR LEAN UNNECESSARILY CLOSE TO THE AIR BAG. • DO NOT PLACE ANY OBJECTS OVER THE AIR BAG OR BETWEEN THE AIR BAG AND YOURSELF. • SEE THE OWNER'S MANUAL FOR FURTHER INFORMATION AND EXPLANATIONS.	POUR ÉVITER DES BLESSURES GRAVES: • POUR PROFITER D'UNE PROTECTION MAXIMALE LORS D'UNE COLLISION BOUCLEZ TOUJOURS VOTRE CEINTURE DE SÉCURITÉ. • N'INSTALLEZ JAMAIS UN SIÈGE POUR ENFANTS FAISANT FACE À L'ARRIÈRE SUR LE SIÈGE DU PASSAGER AVANT. • NE VOUS APPUYEZ PAS ET NE VOUS ASSEYEZ PAS PRÈS DU COUSSIN GONFLABLE. • NE DÉPOSEZ AUCUN OBJET SUR LE COUSSIN GONFLABLE OU ENTRE LE COUSSIN GONFLABLE ET VOUS. • LISEZ LE GUIDE UTILISATEUR POUR DE PLUS AMPLES RENSEIGNEMENTS.

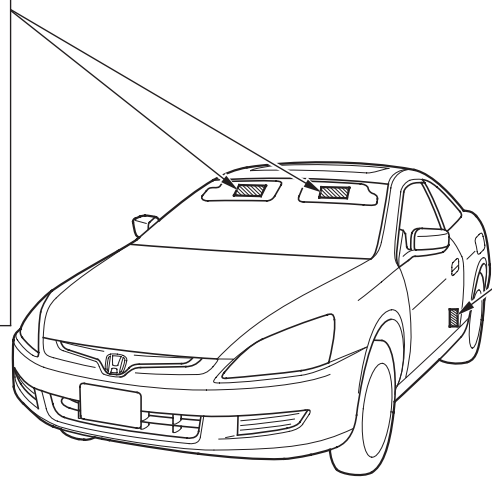

DOORJAMBS

On cars with side airbags

U.S. models

SIDE AIRBAG

- This car is equipped with side airbags in the driver's and passenger's seat.
- Do not lean against the door.
- See owner's manual for more information.

Canadian models

SIDE AIRBAG

- This car is equipped with side airbags in the driver's and passenger's seat.
- Do not lean against the door.
- See owner's manual for more information.

COUSSIN GONFLABLE LATERAL

- Cette voiture est équipée de coussins gonflables latéraux dans les sièges du conducteur et du passenger.
- Ne vous appuyez pas sur la porte.
- Consultez le Manuel du propriétaire pour en savoir plus.

On cars with side curtain airbags

U.S. models

SIDE AIRBAG

- This car is equipped with side airbags in the front seats and side curtain airbags.
- Do not lean against the door.
- See owner's manual for more information.

Canadian models

SIDE AIRBAG

- This car is equipped with side airbags in the front seats and side curtain airbags.
- Do not lean against the door.
- See owner's manual for more information.

COUSSIN GONFLABLE LATERAL

- Cette automobile est équipée de coussins gonflables latéraux dans les sièges avant ainsi que de coussins gonflables latéraux de type rideau.
- Ne vous appuyez pas sur la porte.
- Consultez le Manuel du propriétaire pour en savoir plus.

This section gives information about the controls and displays that contribute to the daily operation of your Honda. All the essential controls are within easy reach.

Control Locations 56
Instument Panel 57
Instument Panel Indicators 58
Maintenance Required Indicator ... 63
Gauges 65
  Odometer 65
  Outside Temperature Indicator 66
  Trip Meter 66
  Temperature Gauge 67
  Fuel Gauge 67
Controls Near the Steering Wheel 68
Windshield Wipers and Washers .. 69
Turn Signal and Headlights 70
Instrument Panel Brightness 72
Hazard Warning 72
Rear Window Defogger 73
Steering Wheel Adjustment 74
Keys and Locks 75
Immobilizer System 76
Ignition Switch 77
Power Door Locks 78
Remote Transmitter 79
Trunk 82
  Emergency Trunk Opener 82
Seats 83
Seat Heaters 90
Power Windows 91
Moonroof 94
Mirrors 95
Parking Brake 97
Interior Convenience Items 98
  Glove Box 99
  Beverage Holders 99
  Console Compartment 100
  Center CD Pocket 100
  Coin Pocket 101
  Sun Visor 101
  Vanity Mirror 102
  Coat Hook 102
  Sunglasses Holder 103
  Accessory Power Sockets 103
Interior Lights 103

Control Locations

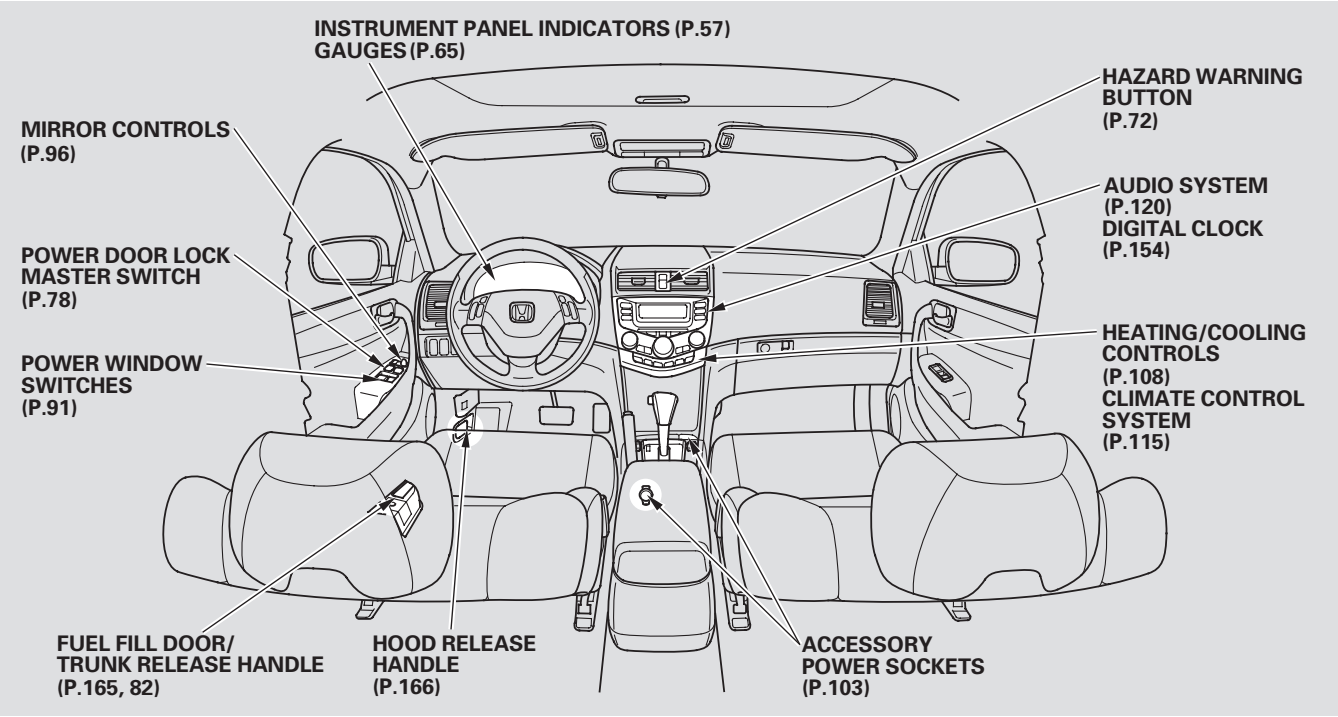

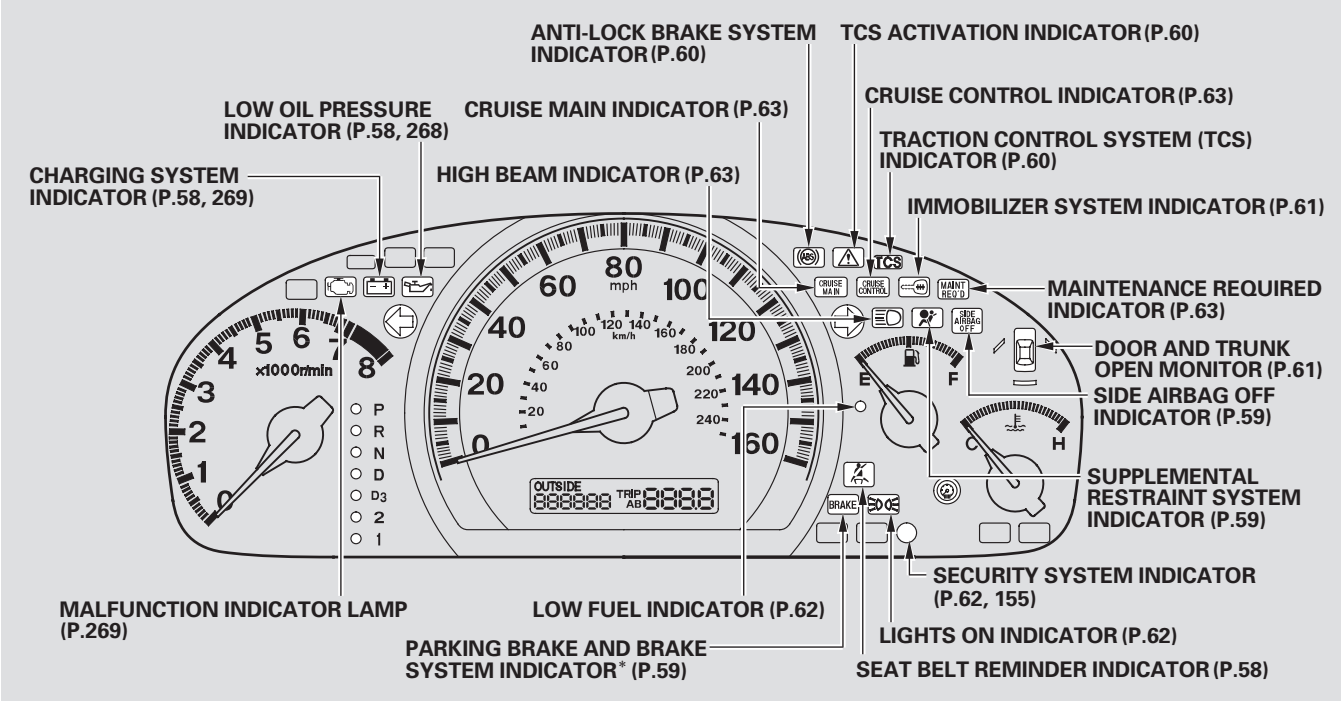

* The U.S. instrument panel is shown. Differences for the Canadian models are noted in the text.

Instrument Panel Indicators

The instrument panel has many indicators to give you important information about your vehicle.

Seat Belt Reminder Indicator

The seat belt system includes an indicator on the instrument panel and a beeper to remind you and your passengers to fasten your seat belts.

If you turn the ignition switch to ON (II) before fastening your seat belt, the beeper sounds and the indicator flashes. If you do not fasten your seat belt before the beeper stops, the indicator stops flashing but remains on.

If you continue driving without fastening your seat belt, the beeper sounds and the indicator flashes again at regular intervals.

Low Oil Pressure Indicator

The engine can be severely damaged if this indicator flashes or stays on when the engine is running. For more information, see page 268 .

Charging System Indicator

If this indicator comes on when the engine is running, the battery is not being charged. For more information, see page 269 .

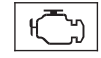

Malfunction Indicator Lamp

See page 269 .

U.S. Canada

BRAKE

Parking Brake and Brake System Indicator

This indicator has two functions:

1. This indicator comes on when you turn the ignition switch to ON (II). It is a reminder to check the parking brake. If you drive at certain speeds without fully releasing the parking brake, the beeper sounds continuously. Driving with the parking brake not fully released can damage the brakes and tires.

2. If it remains lit after you fully release the parking brake while the engine is running, or if it comes on while driving, there could be a problem with the brake system. For more information, see page 271 .

Supplemental Restraint System Indicator

This indicator lights briefly when you turn the ignition switch to ON (II). If it comes on at any other time, it indicates a potential problem with your front airbags. This indicator will also alert you to a potential problem with your side airbags, passenger's side airbag automatic cutoff system, side curtain airbags, automatic seat belt tensioners, driver's seat position sensor, or front passenger's weight sensors. For more information, see page 27 .

SIDE AIRBAG OFF

Side Airbag Off Indicator

Only on models equipped with side airbags

This indicator comes on when you turn the ignition switch to ON (II). If it comes on at any other time, it indicates that the passenger's side airbag has automatically shut off. For more information, see page 28 .

Anti-lock Brake System (ABS) Indicator

This indicator normally comes on for a few seconds when you turn the ignition switch to ON (II). If it comes on at any other time, there is a problem in the ABS. If this happens, have your vehicle checked by your Honda dealer. With this indicator on, your vehicle still has normal braking ability but no anti-lock. For more information, see page 189 .

TCS Activation Indicator

On all V6 models

This indicator has three functions:

1. It comes on as a reminder that you have turned off the Traction Control System.

2. It flashes when the TCS is regulating wheelspin.

3. If it comes on and stays on when the Traction Control System is on, it indicates that there is a problem in the TCS.

This indicator normally also comes on for a few seconds when you turn the ignition switch to ON (II). If it comes on and stays on at any other time, or it does not come on when you turn the ignition switch to ON (II), there is a problem with the TCS. Take the vehicle to your dealer to have it checked. See page 191 for more information on the TCS.

Traction Control System (TCS) Indicator

On all V6 models

This indicator normally comes on for a few seconds when you turn the ignition switch to ON (II). If it comes on and stays on with the TCS Activation Indicator, there is a problem with the TCS. For more information on the TCS, see page 191 .

Immobilizer System Indicator

This indicator comes on for a few seconds when you turn the ignition switch to ON (II). It will go off if you have inserted a properly-coded ignition key. If it is not a properly-coded key, the indicator will blink and the engine will not start (see page 76).

This indicator also blinks several times when you turn the ignition switch from ON (II) to ACCESSORY (I) or LOCK (0).

Door and Trunk Open Monitor

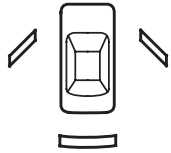

The appropriate indicator comes on in this display if the trunk or either door is not closed tightly.

All the indicators in the monitor display come on for a few seconds when you turn the ignition switch to ON (II).

Turn Signal and Hazard Warning Indicators

The left or right turn signal indicator blinks when you signal a lane change or turn. If the indicators do not blink or blink rapidly, it usually means one of the turn signal bulbs is burned out (see page 237). Replace the bulb as soon as possible, since other drivers cannot see that you are signaling.

When you turn on the Hazard Warning button, both turn signal indicators blink. All turn signals on the outside of the vehicle should flash.

Lights On Indicator

This indicator reminds you that the exterior lights are on. It comes on when the light switch is in either the or position. If you turn the ignition switch to ACCESSORY (I) or LOCK (0) without turning off the light switch, this indicator will remain on. A reminder chime will also sound when you open the driver's door.

Low Fuel Indicator

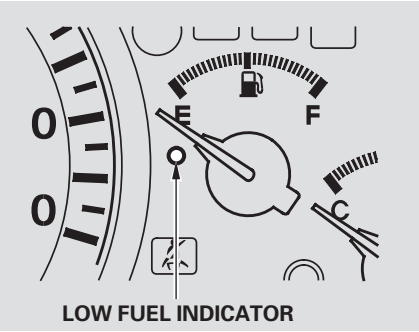

This indicator is located in the fuel gauge. It comes on as a reminder that you must refuel soon.

Security System Indicator

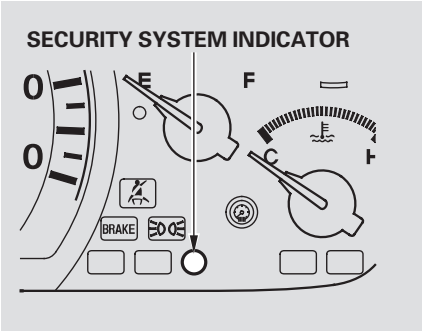

This indicator comes on when the security system is set. See page 155 for more information on the security system.

DRL "Daytime Running Lights" Indicator

Canadian models only

This indicator comes on when you turn the ignition switch to ON (II) with the headlight switch off and the parking brake set. It should go off if you turn on the headlights or release the parking brake. If it comes on at any other time, it means there is a problem with the DRL. There may also be a problem with the high beam headlights.

High Beam Indicator

This indicator comes on with the high beam headlights. See page 70 for information on the headlight controls.

On Canadian models, this indicator comes on with reduced brightness when the Daytime Running Lights (DRL) are on (see page 71).

CRUISE MAIN Cruise Main Indicator

This indicator comes on when you turn on the Cruise Control System by pressing the Master Button. (see page 156 .)

CRUISE CONTROL Cruise Control Indicator

This indicator comes on when you set the cruise control. See page 156 for information on operating the cruise control.

Washer Level Indicator

Canadian models only

This indicator comes on when the washer fluid level is low. Add washer fluid when you see this indicator come on (see page 224).

MAINT REQ'D Maintenance Required Indicator

This indicator reminds you that it is time to take your vehicle in for the vehicle's scheduled maintenance under normal driving conditions. The indicator does not reflect severe maintenance intervals.

Refer to the Maintenance Schedule for Normal and Severe Driving Conditions on page 205 (4-cylinder models) or page 210 (6-cylinder models).

CONTINUED

Maintenance Required Indicator

4-cylinder models
For the first 8,000 miles (12,800 km) after the Maintenance Required Indicator is reset, it will come on for two seconds when you turn the ignition switch to ON (II).

Between 8,000 miles (12,800 km) and 10,000 miles (16,000 km), this indicator will light for two seconds when you first turn the ignition switch to ON (II), and then flash for ten seconds.

If you exceed 10,000 miles (16,000 km) without having the scheduled maintenance performed, this indicator will remain on as a constant reminder.

6-cylinder models
For the first 6,000 miles (9,600 km) after the Maintenance Required Indicator is reset, it will come on for two seconds when you turn the ignition switch to ON (II).

Between 6,000 miles (9,600 km) and 7,500 miles (12,000 km) this indicator will light for two seconds when you first turn the ignition switch to ON (II), and then flash for ten seconds.

If you exceed 7,500 miles (12,000 km) without having the scheduled maintenance performed, this indicator will remain on as a constant reminder.

Your dealer will reset this indicator after completing the scheduled maintenance. If this maintenance is done by someone other than your Honda dealer, reset the indicator as follows.

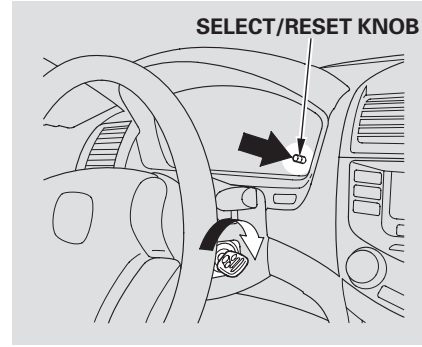

1. Turn off the engine.
2. Press and hold the Select/Reset knob in the instrument panel, then turn the ignition switch to ON (II).
3. Hold the knob for about 10 seconds until the indicator resets.

The gauges illuminate when you turn the ignition switch to ON (II).

Odometer
The odometer shows the total distance your vehicle has been driven. It measures miles in U.S. models and kilometers in Canadian models.
It is illegal under U.S. federal law and Canadian provincial regulations to disconnect, reset, or alter the odometer with the intent to change the number of miles or kilometers indicated.

The odometer and the outside temperature indicator use the same display. To switch the display between the odometer and the outside temperature, press the Select/Reset knob. When you turn the ignition switch to ON (II), what you last selected is displayed.

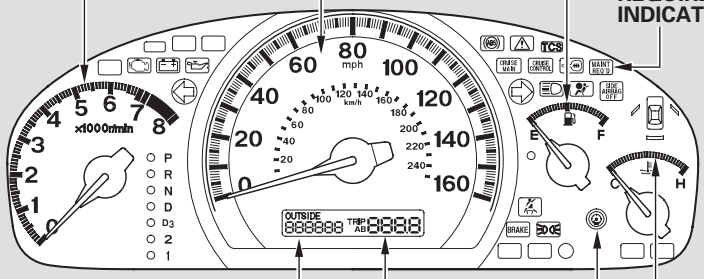

U.S. model is shown.

Outside Temperature Indicator
On 4-cylinder EX-L and 6-cylinder EX models, and all EX models in Canada
This indicator displays the outside temperature in Fahrenheit in U.S. models, and in Centigrade in Canadian models. To see the outside temperature, press and release the Select/Reset knob until the temperature is displayed.

The temperature sensor is in the front bumper. Therefore, the temperature reading can be affected by heat reflection from the road surface, engine heat, and the exhaust from surrounding traffic. This can cause an incorrect temperature reading when your speed is under 19 mph (30 km/h).
When you start your trip, the sensor is not fully acclimatized, therefore it may take several minutes until the proper temperature is displayed.

If the outside temperature is incorrectly displayed, you can adjust it up ±5°F in U.S. models (±3°C in Canadian models) warmer or cooler.

NOTE: The temperature must be stabilized before doing this procedure.

Select the outside temperature display, then press the Select/Reset knob for ten seconds. The following sequence will appear for one second each: 0, 1, 2, 3, 4, 5, −5, −4, −3, −2, −1, 0 (U.S.) or 0, 1, 2, 3, −3, −2, −1, 0 (Canada).

When it reaches the desired value, release the Select/Reset knob. You should see the new outside temperature displayed.

In certain weather conditions, temperature readings near freezing (32°F, 0°C) could mean that ice is forming on the road surface.

Trip Meter
This meter shows the number of miles (U.S.) or kilometers (Canada) driven since you last reset it.

There are two trip meters: Trip A and Trip B. Switch between these displays and the odometer/outside temperature display by pressing the Select/Reset knob repeatedly. Each trip meter works independently, so you can keep track of two different distances.

When you turn the ignition switch to ON (II), what you last selected is displayed.

To reset a trip meter, display it, and then press and hold the Select/Reset knob until the number resets to “0.0”. Both trip meters will reset to “0.0” if the vehicle’s battery goes dead or is disconnected.

Temperature Gauge
This shows the temperature of the engine's coolant. During normal operation, the pointer should rise to about the middle of the gauge. In severe driving conditions, the pointer may rise into the upper half of the gauge. If it reaches the red (Hot) mark, pull safely to the side of the road. Turn to page 266 for instructions and precautions on checking the engine's cooling system.

Fuel Gauge
This shows how much fuel you have. It may show slightly more or less than the actual amount. The needle returns to the bottom after you turn off the ignition.

NOTICE: *Avoid driving with an extremely low fuel level. Running out of fuel could cause the engine to misfire, damaging the catalytic converter.*

Controls Near the Steering Wheel

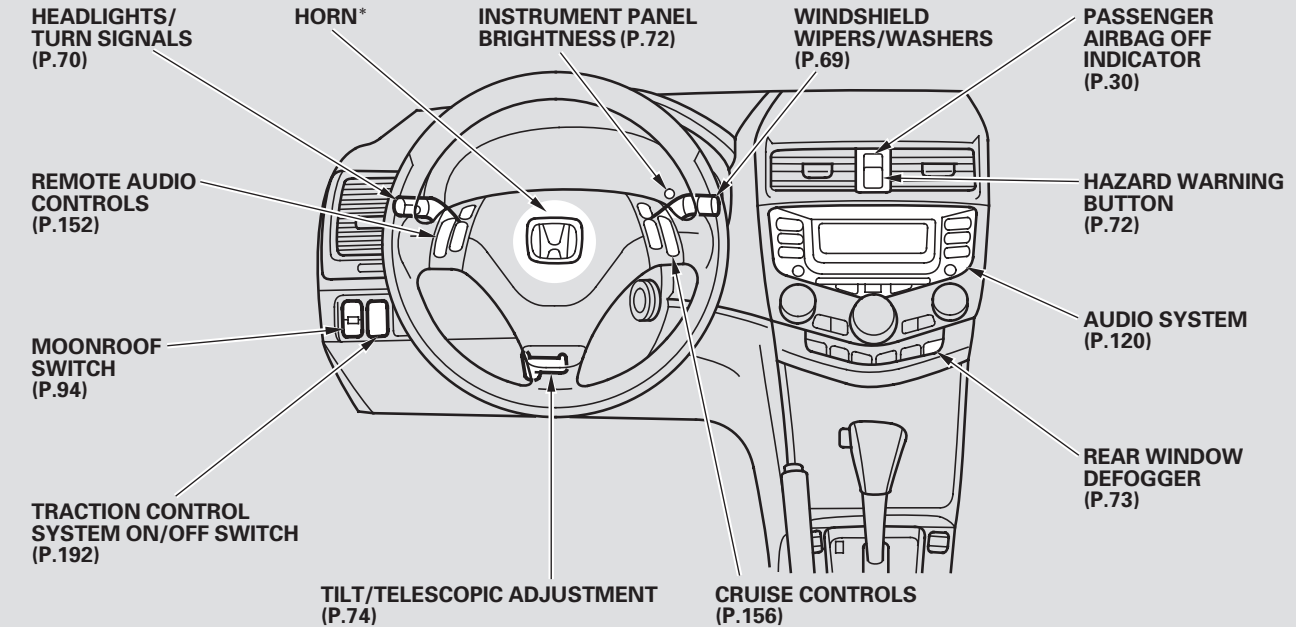

EX-V6 model without navigation system is shown.

* To use the horn, press the pad around the “H” logo.

Windshield Wipers

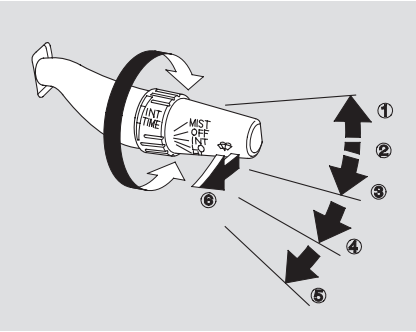

1. MIST
2. OFF
3. INT — Intermittent
4. LO — Low
5. HI — High
6 Windshield Washers

Push the right lever up or down to select a position.

MIST — The wipers run at high speed until you release the lever.

OFF — The wipers are not activated.

INT — The length of the wiper interval is varied automatically according to the vehicle's speed.

Vary the delay by turning the INT TIME ring. If you turn it to the shortest delay, the wipers will change to low speed operation when the vehicle speed exceeds 12 mph (20 km/h).

While the vehicle is stopped and in gear, the wipers sweep the windshield whenever you remove your foot from the brake pedal.

LO — The wipers run at low speed.

HI — The wipers run at high speed.

Windshield Washer — Pull the wiper control lever toward you and hold it. The washers spray until you release the lever. The wipers run at low speed, then complete one more sweep after you release the lever.

Turn Signal and Headlights

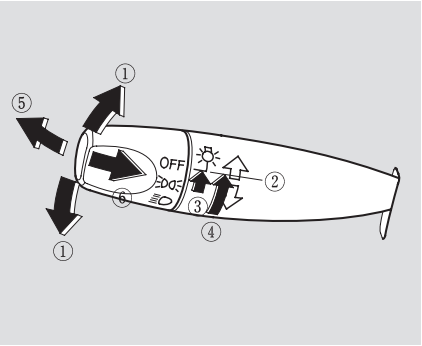

1. Turn signal
2. Off
3. Parking and indicator lights
4. Headlights on
5. High beams
6. Flash high beams

Turn Signal — Push down on the left lever to signal a left turn and up to signal a right turn. To signal a lane change, push lightly on the lever in the proper direction and hold it. The lever will return to center when you release it or complete a turn.

Headlights On — Rotating the switch on the left lever to the " " position turns on the parking lights, taillights, side-marker lights, and rear license plate lights.

Turning the switch to the " " position turns on the headlights. If you leave the lights on with the key removed from the ignition switch, you will hear a reminder chime when you open the driver's door.

When the light switch is in either of these positions, the Lights On indicator comes on as a reminder.

High Beams — To turn on, push the lever forward until you hear a click. The blue high beam indicator will come on (see page 63). Pull it back to return to low beams.

To flash the high beams, pull the lever back lightly, then release it. The high beams will stay on as long as you hold the lever back.

Automatic Lighting Off Feature
This feature turns off the headlights, parking lights, taillights, and license plate lights within 15 seconds of removing the key from the ignition switch and closing the driver's door.

This feature activates if you leave the headlight switch in the " " or " " position, remove the key, then open and close the driver's door.

If you remove the key from the ignition switch with the headlight switch on, but do not open the door and get out, the lights will turn off after 10 minutes.

The lights will turn on again when you unlock or open the driver's door. If you unlock the door, but do not open it within 15 seconds, the lights will go off. With the driver's door open, you will hear a lights-on reminder chime.

Daytime Running Lights (Canadian Models)
With the headlight switch off, the high beam headlights and the high beam indicator come on with reduced brightness when you turn the ignition switch to ON (II) and release the parking brake. They remain on until you turn the ignition off, even if you set the parking brake.

The headlights revert to normal operation when you turn them on with the switch.

Instrument Panel Brightness, Hazard Warning

Instrument Panel Brightness

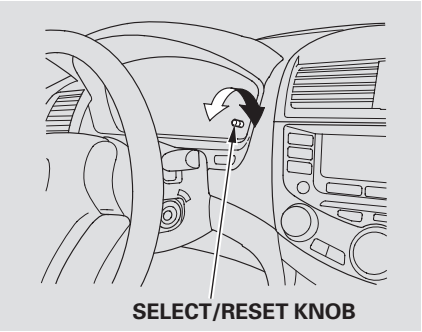

The Select/Reset knob on the instrument panel controls the brightness of the instrument panel lights. Turn the knob to adjust the brightness.

The instrument panel will illuminate with reduced brightness when you unlock and open the driver's door. The brightness will increase slightly when you insert the key in the ignition switch, then go to normal brightness when you turn the ignition switch to ON (II).

If you do not insert the key in the ignition switch after opening the driver's door, the illumination turns off in about 30 seconds after closing that door.

If you insert the key but do not turn the ignition switch to ON (II), the illumination turns off in about 10 seconds.

To reduce glare at night, the instrument panel illumination dims when you turn the light switch to or . Turning the Select/Reset knob fully to the right until you hear a click will cancel the reduced brightness.

Hazard Warning

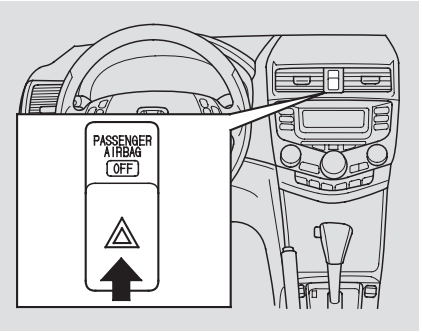

Push the button between the center vents to turn on the hazard warning lights (four-way flashers). This causes all four outside turn signals and both turn indicators in the instrument panel to flash. Use the hazard warning lights if you need to park in a dangerous area near heavy traffic, or if your vehicle is disabled.

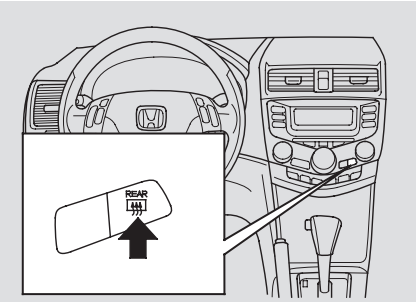

Manual A/C type shown

The rear window defogger will clear fog, frost, and thin ice from the window. Push the defogger button to turn it on and off. The indicator above/in the button lights to show the defogger is on. It also shuts off when you turn off the ignition. You have to turn it on again when you restart the vehicle.

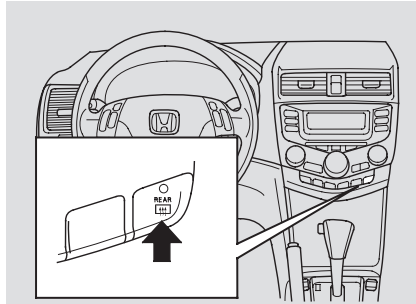

Auto A/C type shown

Make sure the rear window is clear and you have good visibility before starting to drive.

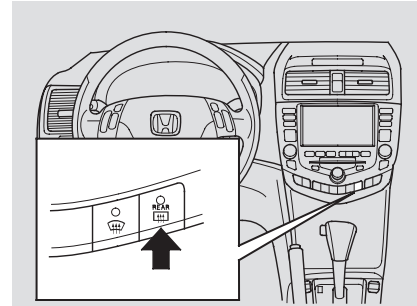

Vehicles with navigation system

The defogger and antenna wires on the inside of the rear window can be accidentally damaged. When cleaning the glass, always wipe side to side.

Steering Wheel Adjustment

See page 15 for important safety information about how to properly position the steering wheel.

Make any steering wheel adjustment before you start driving.

⚠ WARNING

Adjusting the steering wheel position while driving may cause you to lose control of the vehicle and be seriously injured in a crash.

Adjust the steering wheel only when the vehicle is stopped.

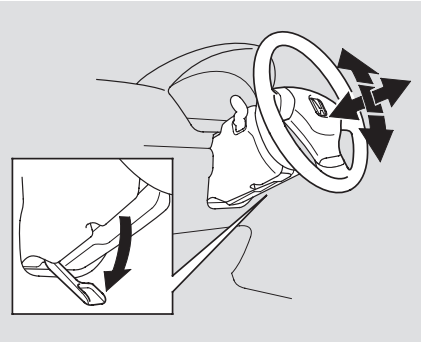

1. Insert the key in the ignition switch, and unlock the steering column.
2. Push the lever under the steering column all the way down.
3. Move the steering wheel so it points to your chest, not toward your face. Make sure you can see the instrument panel gauges and indicators.
4. Push the lever up to lock the steering wheel in position.
5. Make sure you have securely locked the steering wheel in place by trying to move it up, down, in, and out.

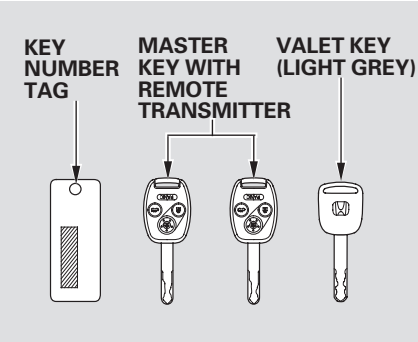

The master key fits all the locks on your vehicle. The valet key works only in the ignition and the driver's door lock. You can keep the trunk release handle, rear seat trunk access, and glove box locked when you leave your vehicle and the valet key at a parking facility.

You should have received a key number tag with your keys. You will need this key number if you ever have to get a lost key replaced. Use only Honda-approved key blanks.

These keys contain electronic circuits that are activated by the Immobilizer System. They will not work to start the engine if the circuits are damaged.

- Protect the keys from direct sunlight, high temperature, and high humidity.
- Do not drop the keys or set heavy objects on them.
- Keep the keys away from liquids. If they get wet, dry them immediately with a soft cloth.

Immobilizer System

The Immobilizer System protects your vehicle from theft. If an improperly-coded key (or other device) is used, the engine's fuel system is disabled.

When you turn the ignition switch to ON (II), the Immobilizer System indicator should come on for a few seconds, then go out. If the indicator starts to blink, it means the system does not recognize the coding of the key. Turn the ignition switch to LOCK (0), remove the key, reinsert it, and turn the switch to ON (II) again.

The system may not recognize your key's coding if another immobilizer key or other metal object (i.e. key fob) is near the ignition switch when you insert the key.

If the system repeatedly does not recognize the coding of your key, contact your Honda dealer.

Do not attempt to alter this system or add other devices to it. Electrical problems could result that may make your vehicle undriveable.

If you have lost your key and cannot start the engine, contact a Honda dealer.

As required by the FCC:
This device complies with Part 15 of the FCC rules. Operation is subject to the following two conditions: (1) This device may not cause harmful interference, and (2) this device must accept any interference received, including interference that may cause undesired operation.

Changes or modifications not expressly approved by the party responsible for compliance could void the user's authority to operate the equipment.

This device complies with Industry Canada Standard RSS-210.
Operation is subject to the following two conditions: (1) this device may not cause interference, and (2) this device must accept any interference that may cause undesired operation of the device.

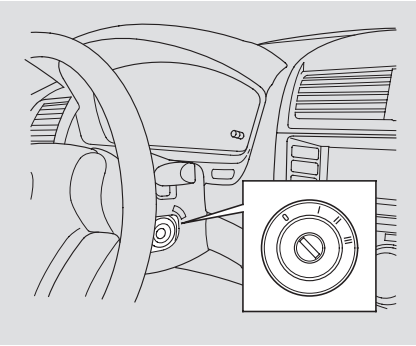

The ignition switch has four positions: LOCK (0), ACCESSORY (I), ON (II), and START (III).

LOCK (0) — You can insert or remove the key only in this position. To turn the key, you must push the key in slightly. If your vehicle has an automatic transmission, the shift lever must also be in park.

If the front wheels are turned, the anti-theft lock may make it difficult to turn the key. Firmly turn the steering wheel to the left or right as you turn the key.

⚠ WARNING

Removing the key from the ignition switch while driving locks the steering. This can cause you to lose control.

Remove the key from the ignition switch only when parked.

ACCESSORY (I) — You can operate the audio system and the accessory power sockets in this position.

ON (II) — This is the normal key position when driving. Several of the indicators on the instrument panel come on as a test when you turn the ignition switch from ACCESSORY (I) to ON (II).

START (III) — Use this position only to start the engine. The switch returns to ON (II) when you let go of the key.

You will hear a reminder beeper if you leave the key in the ignition switch in the LOCK (0) or ACCESSORY (I) position and open the driver's door. Remove the key to turn off the beeper.

On automatic transmission model, the shift lever must be in Park before you can remove the key from the ignition switch.

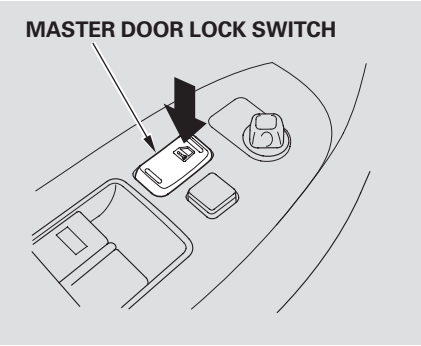

To lock both doors, push the top of the master door lock switch on either door, or press the lock tab down on the driver's door, or use the key on the outside lock on the driver's door.

Pushing the bottom of either master door lock switch will unlock both doors.

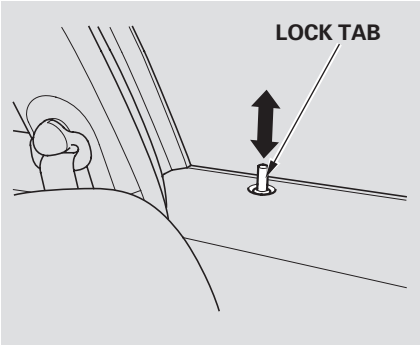

The lock tab on the passenger's door lock and unlock only that door. Pulling up on the driver's door lock tab only unlocks the driver's door.

To unlock only the driver's door from the outside, turn the key and release it. If you turn it again, both doors unlock.

You can open or close the windows by using the key in the driver's door (see page 93).

To lock the passenger's door when getting out of the vehicle, push the lock tab down and close the door. To lock the driver's door, remove the key from the ignition switch and push the lock tab down or push the top of the master switch, then close the door.

Lockout Prevention

With the driver's door open and the key in the ignition, both master door lock switches are disabled. They are not disabled if the driver's door is closed. Pushing the top of the switch on the open passenger's door will lock both doors.

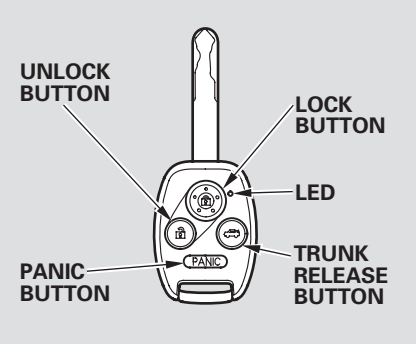

LOCK — Press this button once to lock both doors. Some exterior lights will flash once. When you push LOCK twice within 5 seconds, you will hear a beep to verify that the doors are locked and (if equipped) that the security system has set. You cannot lock it if either door is not fully closed or the key is in the ignition switch.

UNLOCK — Press this button once to unlock the driver's door. Push it twice to unlock the passenger's door. Some exterior lights will flash twice each time you push the button. If you do not open either door within 30 seconds, they will automatically relock and the security system sets (except for 4-cylinder LX model). You cannot unlock it if the key is in the ignition switch.

The ceiling light (if the ceiling light switch is in the center position) and the spotlights (if the switch is in the Door position) will come on when you press the UNLOCK button. If you do not open either door, the lights stay on for about 30 seconds, then fade out. If you relock the doors with the remote transmitter before 30 seconds have elapsed, the lights will go off immediately.

You can also open both power windows from outside the vehicle with the remote transmitter (see page 93).

TRUNK RELEASE — Press this button for about one second to open the trunk. You cannot open it if the key is in the ignition switch.

PANIC — Press this button for about two seconds to attract attention: the horn will sound and the exterior lights will flash for about 30 seconds. To cancel panic mode, press any other button on the remote transmitter or turn the ignition switch to ON (II).

CONTINUED

Remote Transmitter Care

- Avoid dropping or throwing the transmitter.
- Protect the transmitter from extreme temperature.
- Do not immerse the transmitter in any liquid.
- If you lose a transmitter, the replacement needs to be reprogrammed by a Honda dealer.

Replacing the Transmitter Battery

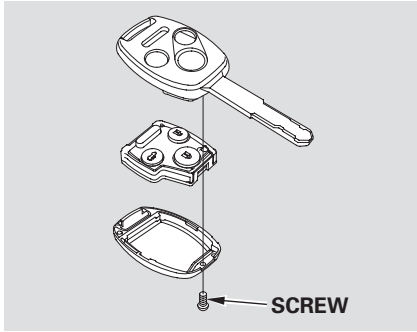

If it takes several pushes on the button to lock or unlock the doors, replace the battery as soon as possible.
Battery type: CR1616

To replace the battery:

1. Remove the screw at the base of the transmitter with a small Phillips-head screwdriver.

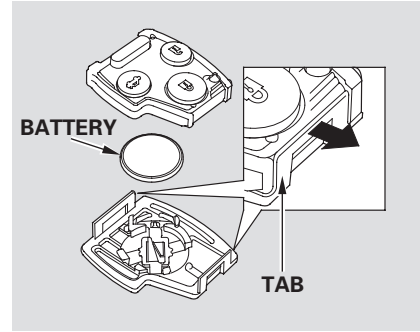

2. Separate the transmitter by prying its middle seam with your fingernail.
3. Inside the transmitter, separate the inner cover from the keypad by releasing the two tabs on the cover.

4. Remove the old battery from the back of the inner cover, and note the polarity. Make sure the polarity of the new battery is the same (+ side facing down), then insert it into the back of the cover.

5. Install the parts in reverse order.

As required by the FCC:
This device complies with Part 15 of the FCC rules. Operation is subject to the following two conditions: (1) This device may not cause harmful interference, and (2) this device must accept any interference received, including interference that may cause undesired operation.

Changes or modifications not expressly approved by the party responsible for compliance could void the user's authority to operate the equipment.

This device complies with Industry Canada Standard RSS-210.
Operation is subject to the following two conditions: (1) this device may not cause interference, and (2) this device must accept any interference that may cause undesired operation of the device.

Trunk

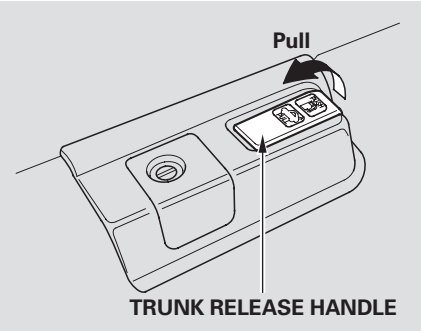

You can open the trunk in two ways:

- Pull the trunk release handle to the left of the driver's seat.
- Press and hold the trunk release button on the remote transmitter.

To close the trunk, press down on the trunk lid.

Keep the trunk lid closed at all times while driving to avoid damaging the lid, and to prevent exhaust gas from getting into the interior. See **Carbon Monoxide Hazard** on page 51.

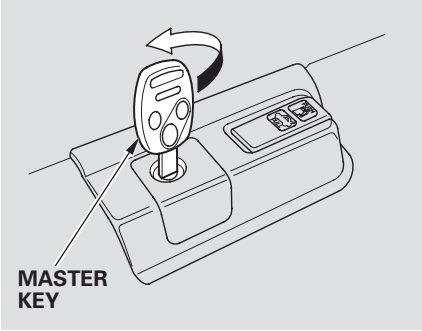

To protect items in the trunk when you need to give the key to someone else:

1. Lock the trunk release handle with the master key.
2. Give the person the valet key.

Emergency Trunk Opener

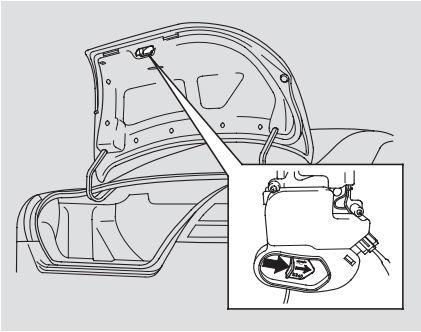

As a safety feature, your vehicle has a release lever on the trunk latch so the trunk can be opened from the inside. To open the trunk, push the release lever to the left.

Parents should decide if their children should be shown how to use this feature.
For more information about child safety, see page 36.

All V6 models, the 4-cylinder EX-L model, and all Canadian EX models have a power adjustable driver's seat.

The 4-cylinder EX model has a power seat bottom height adjustment. All other driver's seat adjustments in this model are manual.

The 4-cylinder LX model has manual driver's seat adjustments (see next column).

The front passenger's seat in all models adjusts manually.

Manual Seat Adjustments

See pages 11 — 13 for important safety information and warnings about how to properly position the seats and seat-backs.

Make all seat adjustments before you start driving.

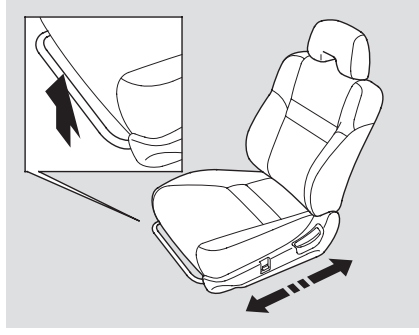

To adjust the seat forward and backward, pull up on the bar under the seat cushion's front edge. Move the seat to the desired position and release the bar. Try to move the seat to make sure it is locked in position.

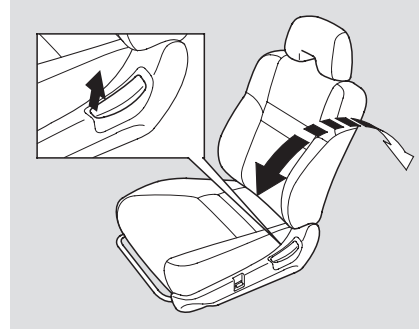

To change the seat-back angle, pull up on the lever on the outside of the seat bottom.

Driver's Seat Manual Height Adjustment

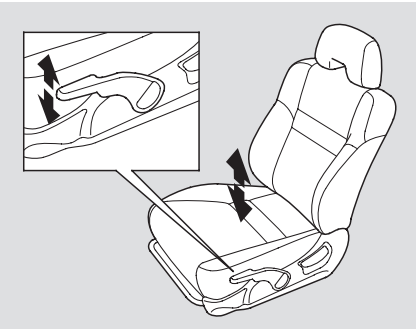

On 4-cylinder LX model
The height of your driver's seat is adjustable. To raise the seat bottom, repeatedly pull up the lever on the outside of the seat cushion. To lower the seat, push down the lever repeatedly.

Make all seat adjustments before you start driving.

Make sure to pull the lever upward or downward to its full range.

Driver's Seat Power Height Adjustment

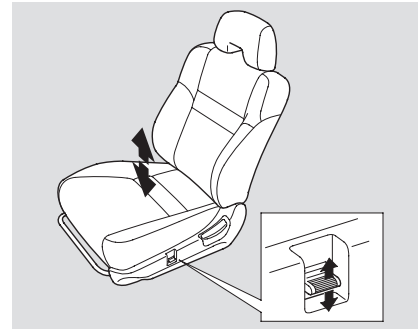

On 4-cylinder EX model
The height of your driver's seat is power adjustable. Pull up on the switch to raise the seat. Push it down to lower the seat.

Make all seat adjustments before you start driving.

Power Seat Adjustments

On all V6 models, and the 4-cylinder EX-L model

See pages 11 — 13 for important safety information and warnings about how to properly position the seats and seat-backs.

The controls for the adjustable driver's power seat are on the outside edge of the seat bottom. You can adjust the power seat with the ignition switch in any position. Make all seat adjustments before you start driving.

Moving the long horizontal switch adjusts the seat bottom in several directions. The seat bottom adjusts in the direction you move the switch. The short vertical switch adjusts the seat-back angle.

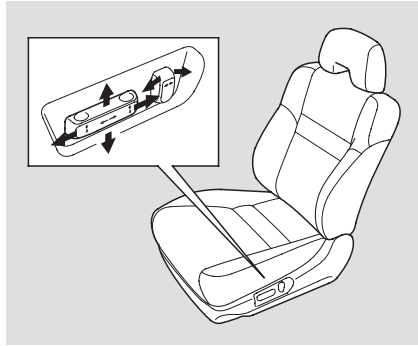

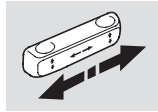

Moves the seat forward and backward.

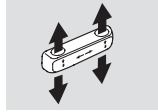

Moves the front of the seat up or down and the rear of the seat up or down.

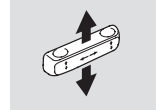

Raises or lowers the seat.

Adjusts the seat-back angle forward or backward.

Driver's Lumbar Support

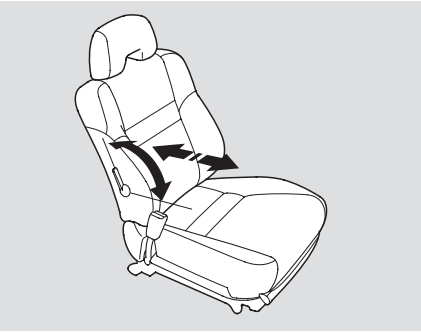

On all EX and EX-V6 models
To change the lumbar support, move the lever on the right side of the seat-back forward or backward. Keep moving the lever forward or backward until you find a suitable position.

Armrest

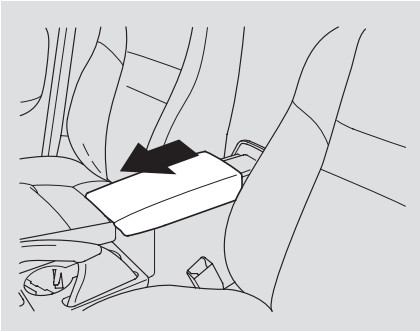

To use the console lid as an armrest, slide it to the desired position.

Make sure the passenger's hands or fingers are away from the armrest before moving it.

Rear Seat Access

Driver's Side

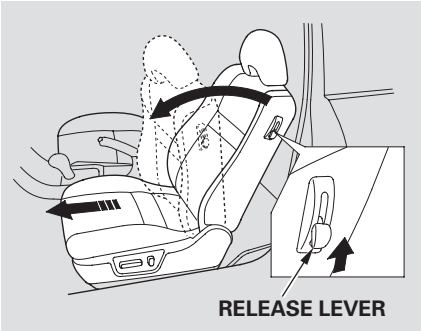

On all V6 models and 4-cylinder EX-L model
To get into the rear seat on the driver's side, open the door and pull the release lever up on the side of the seat-back. The seat-back will tilt forward to allow easier entry to the rear seat.

On LX and EX models
To get into the rear seat on the driver's side, open the door and pull up on the seat-back adjustment lever. The seat-back will tilt forward to allow easier entry to the rear seat.

Passenger's Side

To get into the rear seat on the passenger's side, push downward on the release lever at the base of the seat-back. The seat-back will tilt forward and the entire seat will move forward to allow easier entry to the rear seat.

After a passenger gets into the back seat, push the seat-back to the upright position and push the whole seat backwards until it latches. Make sure the seat is fully latched before sitting in it.

Head Restraints

See page 13 for important safety information and a warning about how to properly position the head restraints.

Your vehicle has adjustable head restraints on the front seats. They are also on the outside positions of the rear seat.

The head restraints help protect you and your passengers from whiplash and other injuries.

They are most effective when you adjust them so the back of the occupant's head rests against the center of the restraint.

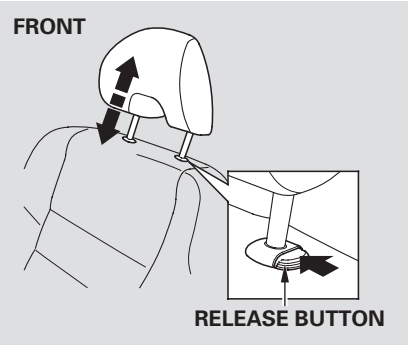

The head restraints adjust for height. You need both hands to adjust the restraint. Do not attempt to adjust it while driving. To raise it, pull upward. To lower the restraint, push the release button sideways, and push the restraint down.

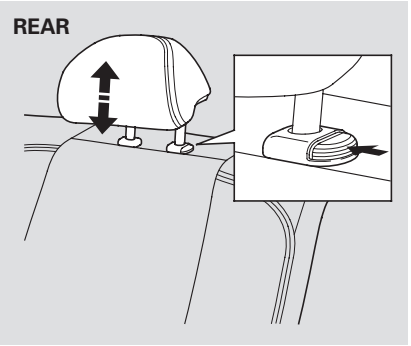

Folding Rear Seat

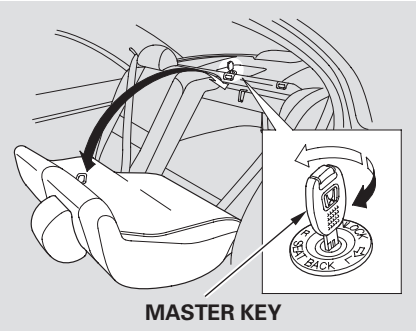

The left and right halves can be folded separately from inside the vehicle or inside the trunk. To fold down the seat-back from inside the vehicle, insert the master key in the lock on the rear shelf. To fold down the driver's side, turn the key clockwise, pull down the top of the seat-back, then release the key. To fold down the passenger's side, turn the key counterclockwise and perform the same procedure.

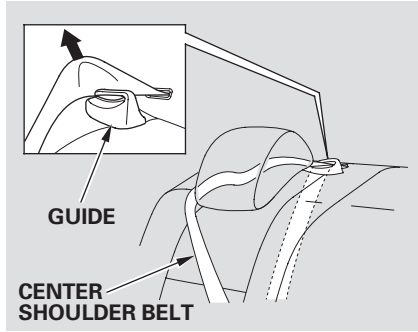

When storing cargo, you can move the rear center shoulder belt out of the way by removing the belt from the guide.

To release the seat-back from inside the trunk, pull the release under the trunk panel. Push the seat-back down, then let go of the release.

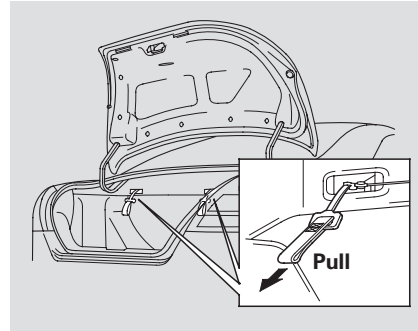

To lock the seat-back upright, push it firmly against the trunk panel. Make sure it is latched in place by pulling on the top of the seat.

Do not put any heavy items on the seat-back when it is folded.

CONTINUED

Make sure all rear shoulder belts are positioned in front of the rear seat-back whenever the seat-back is in its upright position.

Make sure all items in the trunk, or items extending through the opening into the back seat, are secured. Loose items can fly forward and cause injury if you have to brake hard. See **Carrying Cargo** on page 173.

Never drive with the seat-back folded down and the trunk lid open. See **Carbon Monoxide Hazard** on page 51.

Seat Heaters

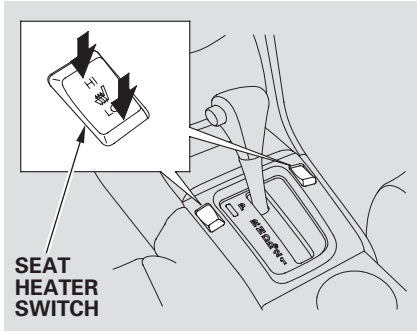

On EX-V6 model and EX-L model

Both front seats are equipped with seat heaters. Because of the sensors for the side airbag system, there is no heater in the passenger's seat-back. The ignition switch must be ON (II) to use the heaters.

Push the front of the switch, HI, to rapidly heat up the seat. After the seat reaches a comfortable temperature, select LO by pushing the back of the switch. This will keep the seat warm.

In HI, the heater turns off when the seat gets warm, and turns back on after the seat's temperature drops.

In LO, the heater runs continuously. It does not cycle with temperature changes.

Follow these precautions when using the seat heaters:

- Use the HI setting only to heat the seats quickly, because it draws large amounts of current from the battery.
- If the engine is left idling for an extended period, do not use the seat heaters, even on the LO setting. It can weaken the battery, causing hard starting.

You vehicle's windows are electrically-powered. Turn the ignition switch to ON (II) to raise or lower either window.

Each door has a switch that controls its window. To open the window, push the switch down and hold it. Release the switch when you want the window to stop. Close the window by pulling back on the switch and holding it.

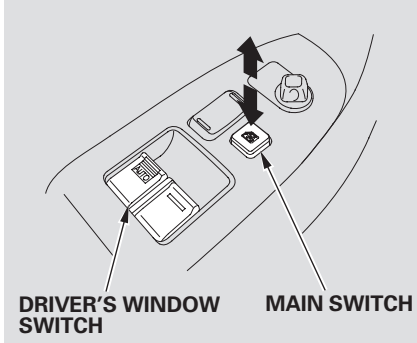

The driver's armrest has a master power window control panel. To open the passenger's window, push down on the switch and hold it down until the window reaches the desired position. To close the window, pull back on the window switch. Release the switch when the window gets to the position you want.

⚠WARNING

Closing a power window on someone's hands or fingers can cause serious injury.

Make sure your passengers are away from the windows before closing them.

CONTINUED

AUTO — To open the driver's window fully, push the window switch firmly down, then release it. The window automatically goes down all the way. To stop the window from going all the way down, pull back on the window switch briefly.

To close the driver's window fully, pull back the window switch firmly, then release it. The window automatically goes all the way up. To stop the window from going all the way up, push down on the window switch briefly.

To open or close the driver's window partially, push down or pull back on the window switch lightly and hold it. The window will stop when you release the switch.

When you push the MAIN switch in, the switch is OFF, and the passenger's window cannot be raised or lowered. To cancel this feature, push on the switch again to get it to pop out. Keep the MAIN switch off when you have children in the vehicle so they do not injure themselves by operating the window unintentionally.

Auto Reverse — If the driver's window runs into any obstacle while it is closing automatically, it will reverse direction and then stop. To close the window, remove the obstacle, then use the window switch again.

Auto reverse stops sensing when the window is almost closed. You should always check that all passengers and objects are away from the window before closing it.

If your vehicle's battery is disconnected or goes dead, or the driver's window fuse is removed, the AUTO function will be disabled. The power window system needs to be reset after reconnecting the battery or installing the fuse.

1. Start the engine. Push down and hold the driver's window switch until the window is fully open.

2. Pull and hold the driver's window switch to close the window completely, then hold the switch for a second or two more.

If the power windows do not operate properly after resetting, have your vehicle checked by a Honda dealer.

The power window system has a key-off delay function. The windows will still operate for up to 10 minutes after you turn off the ignition. Opening either door cancels the delay function. You must turn the ignition switch to ON (II) again before you can raise or lower the windows.

Opening the Windows with the Remote Transmitter

You can open both windows from the outside with the remote transmitter.

1. Press the UNLOCK button once to unlock the driver's door.

2. Press the UNLOCK button a second time, and hold it. The passenger's door unlocks, and both windows start to open. To stop the windows, release the button.

3. To open the windows further, press the button again.

You cannot close the windows with the remote transmitter.

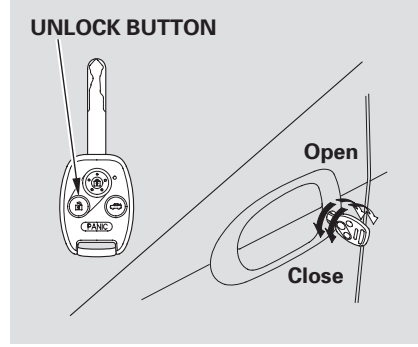

Opening/Closing the Windows with the Key

You can open and close the windows with the key in the driver's door lock.

To open:

1. Insert the key in the driver's door lock.

2. Turn the key clockwise, then release it.

CONTINUED

3. Turn the key clockwise again, and hold it. Both windows start to open. To stop the windows, release the key.

4. To open the windows further, turn and hold the key again (within 10 seconds).

NOTE: If the window stops before the desired position, repeat steps 2 and 3.

To close:
1. Insert the key in the driver's door lock.

2. Turn the key counterclockwise, then release it.

3. Turn the key counterclockwise again, and hold it. Both windows start to close. To stop the windows, release the key.

4. To close the windows further, turn and hold the key again (within 10 seconds).

NOTE: If the window stops before the desired position, repeat steps 2 and 3.

Moonroof

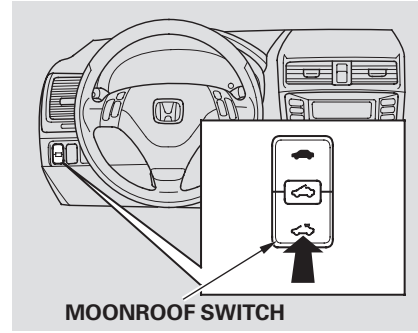

On all EX and EX-V6 models
The moonroof has two positions: it can be tilted up in the back for ventilation, or it can be slid back into the roof. Use the switch under the left dashboard vent to operate the moonroof. The ignition switch must be ON (II).

To tilt up the back of the moonroof, press and hold the center button ( ). To close the moonroof, press and hold the upper part of the switch ( ). To open the moonroof, press and hold the lower part of the switch ( ). Release the switch when the moonroof gets to the desired position. Make sure everyone's hands are away from the moonroof before opening or closing it.

⚠ WARNING

Opening or closing the moonroof on someone's hands or fingers can cause serious injury.

Make sure all hands and fingers are clear of the moonroof before opening or closing it.

The moonroof has a key-off delay. You can still open and close the moonroof for up to 10 minutes after you turn off the ignition. The key-off delay cancels as soon as you open either door. You must then turn the ignition to ON (II) for the moonroof to operate.

NOTICE: *If you try to open the moonroof in below-freezing temperatures, or when it is covered with snow or ice, you can damage the moonroof panel or motor.*

Mirrors

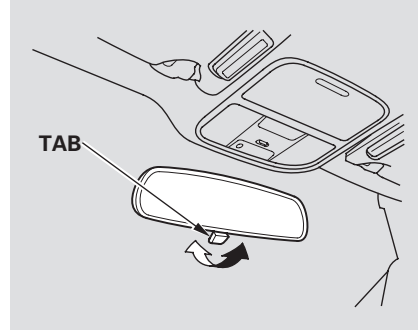

Keep the inside and outside mirrors clean and adjusted for best visibility. Be sure to adjust the mirrors before you start driving.

The inside mirror has day and night positions. The night position reduces glare from headlights behind you. Flip the tab on the bottom edge of the mirror to select the day or night position.

CONTINUED

Adjusting the Power Mirrors

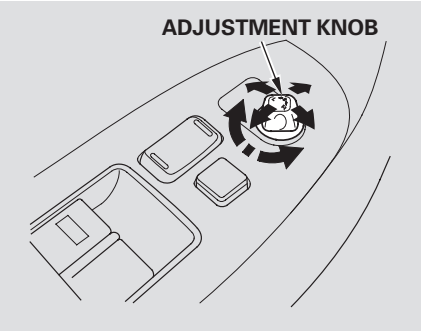

1. Turn the ignition switch to ON (II).

2. Turn the adjustment knob to L (driver's side) or R (passenger's side).

3. Push or pull the adjustment knob right, left, up, or down to move the mirror.

4. When you finish, turn the adjustment knob to the center (off) position. This turns off the adjustment knob to keep your settings.

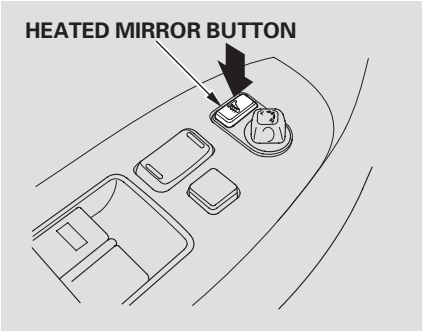

On all Canadian models
The outside mirrors are heated to remove fog and frost. With the ignition switch in the ON (II) position, turn on the heaters by pressing the button. The indicator in the button comes on as a reminder. Press the button again to turn the heaters off.

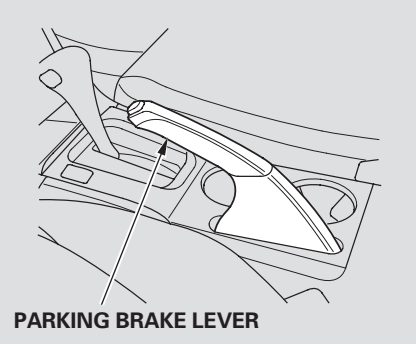

To apply the parking brake, pull the lever up fully. To release it, pull up slightly, push the button, and lower the lever. The parking brake indicator on the instrument panel should go out when the parking brake is fully released with the engine running (see page 59).

If you drive at certain speeds without fully releasing the parking brake, the beeper sounds continuously.

NOTICE: *Driving the vehicle with the parking brake applied can damage the rear brakes and axles.*

Interior Convenience Items

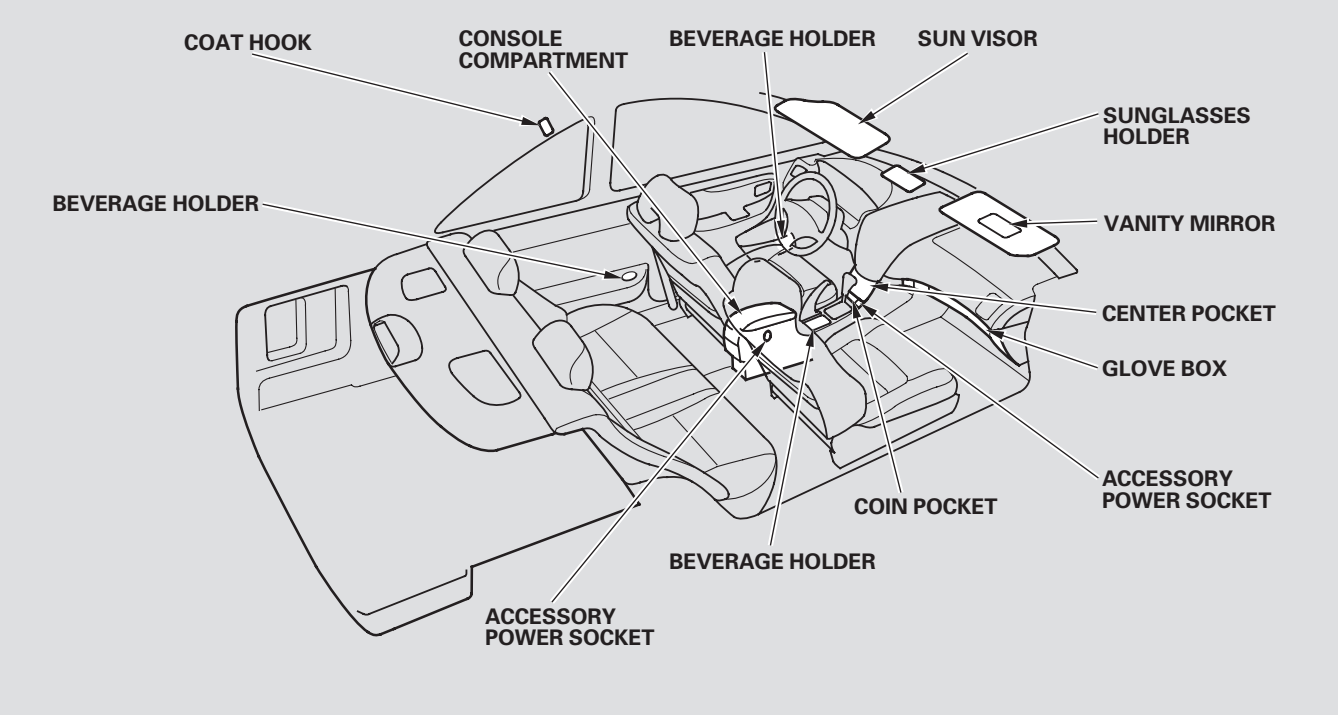

Glove Box

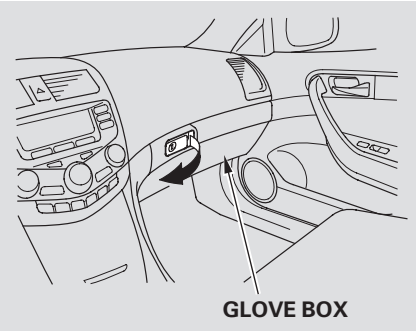

Open the glove box by pulling the handle to the left. Close it with a firm push. Lock or unlock the glove box with the master key.

The glove box light comes on when the parking lights are on.

⚠ WARNING

An open glove box can cause serious injury to your passenger in a crash, even if the passenger is wearing the seat belt.

Always keep the glove box closed while driving.

Beverage Holders

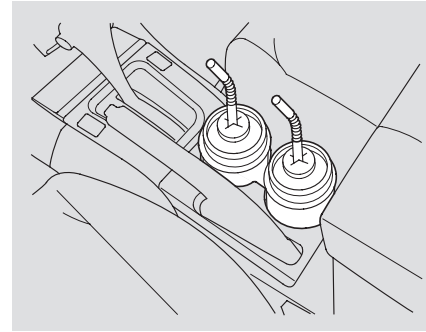

Be careful when you are using the beverage holders. A spilled liquid that is very hot can scald you or your passengers. Liquid can also spill from the door pocket beverage holders when you open or close the doors. Use only resealable containers in the door pockets.

Spilled liquids can damage the upholstery, carpeting, and electrical components in the interior.

Console Compartment

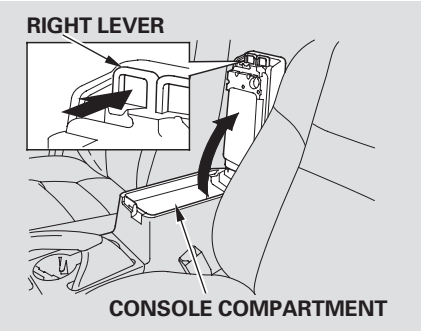

To open the console compartment, pull up on the right lever and lift the armrest.

To close, lower the armrest, and push it down until it latches.

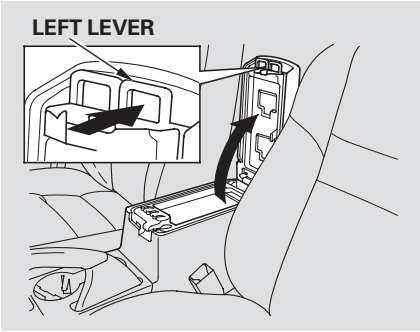

You can put small items in the tray located in the console compartment lid. To use the tray, pull up on the left lever and lift up the armrest.

The tray in the console compartment has a coin holder.

Center CD Pocket

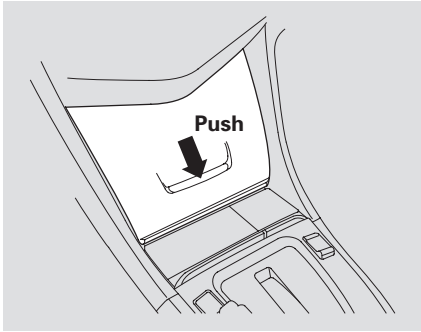

On U.S. vehicles without navigation system and all Canadian models
To open the center CD pocket, push-down on the center of the lid to unlatch it. It will swing open automatically. To close it, push the lid down until it latches. This pocket can store up to 12 CDs.

Coin Pocket

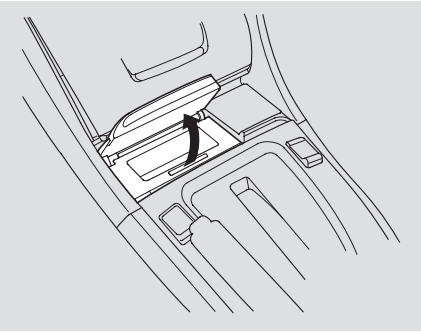

To open the coin pocket, pull the lid up. To close it, push the lid down until it latches. The compartment cannot be used as an ashtray.

Sun Visor

To use the sun visor, pull it down. When using the sun visor for the side window, remove the support rod from the clip and swing it out.

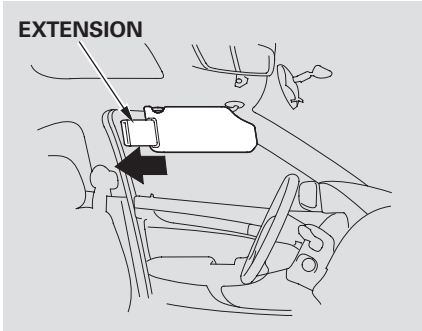

On vehicles without side curtain airbags
In this position, the sun visor can be extended by sliding out the extension. Do not use the sun visor extension over the rear view mirror.

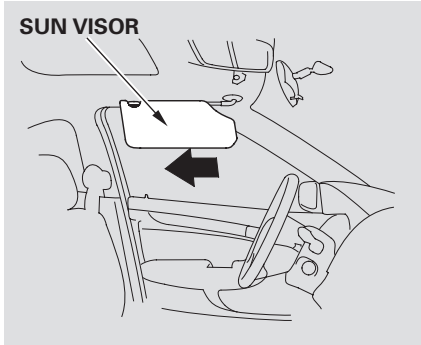

On vehicles with side curtain airbags
In this position, the sun visor can be adjusted by moving it on its slider. Do not use the sun visor extension over the rear view mirror.

Make sure you put the sun visor back in place when you are getting into or out of the vehicle.

Vanity Mirror

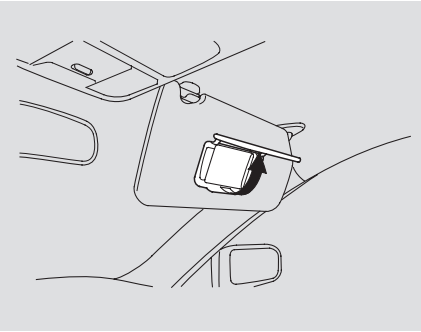

Pull up the vanity mirror cover to use it. The lights beside the mirror come on when you pull up the cover.

Coat Hook

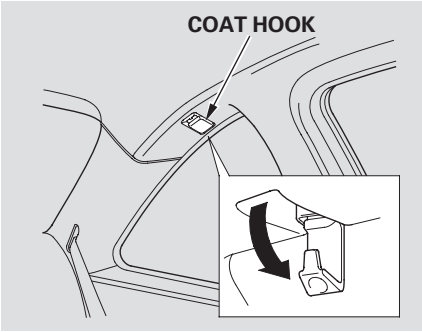

To use a coat hook, pull it down. Close it with a firm push.

Make sure the coat hook is closed when you are not using it. This hook is not designed for large or heavy items.

On vehicles with side curtain airbags

⚠ CAUTION

Do not put a coat hanger or hard objects on a coat hook. This could result in injuries if your side curtain airbag inflates.

Sunglasses Holder

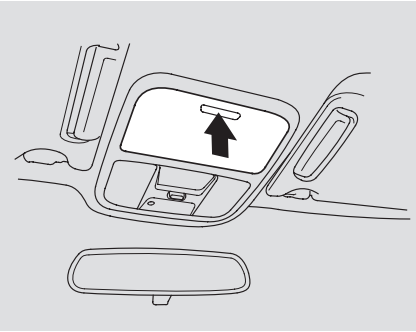

To open the sunglasses holder, push on the front edge. Make sure the holder is closed while you are driving. Some larger styles of sunglasses may not fit in the holder.

You may also store small items in this holder. Make sure they are small enough to let the holder close and latch, and that they are not heavy enough to cause the holder to pop open while driving.

Accessory Power Sockets

These sockets are intended to supply power for 12 volt DC accessories that are rated 120 watts or less (10 amps).

To use an accessory power socket, the ignition switch must be in ACCESSORY (I) or ON (II).

None of the sockets will power an automotive type cigarette lighter element. When more than one socket is being used, the combined power rating of the accessories should be 120 watts or less (10 amps).

Ceiling Light

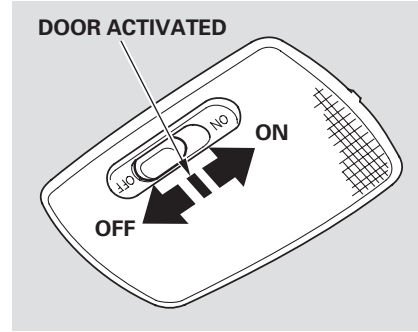

The ceiling light has a three-position switch; ON, Door Activated, and OFF. In the Door Activated (center) position, the light comes on when you:

- Open either door.
- Unlock the doors with the key or remote transmitter.

CONTINUED

After both doors are closed tightly, the light dims slightly, then fades out in about 30 seconds.

The ceiling light (with the switch in the center position) comes on when you remove the key from the ignition switch. If you do not open a door, the light stays on, then fades out in about 30 seconds.

If you leave either door open with the key not in the ignition switch, the ceiling light will go off after three minutes.

Spotlights

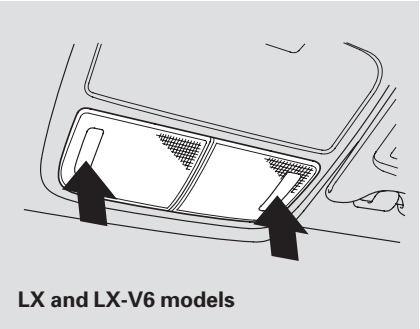

LX and LX-V6 models

Turn on a spotlight by pushing the lens. Push the lens again to turn it off. You can use the spotlights at all times.

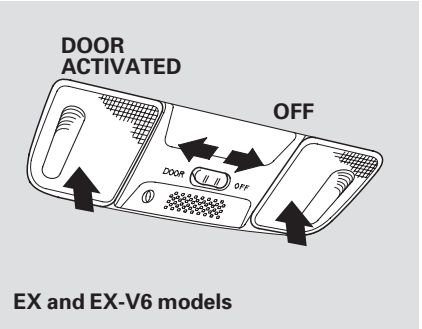

EX and EX-V6 models

On EX and EX-V6 models
The spotlights have a two-position switch. In the DOOR position, the lights come on when you open either door. In the OFF position, the lights do not come on.

The spotlights (with the switch in the DOOR position) also come on when you unlock the door with the key or the remote transmitter, and when you remove the key from the ignition switch.

Courtesy Lights

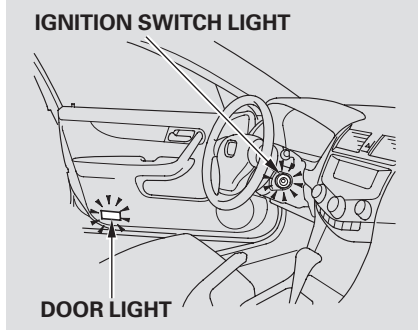

The courtesy light in each door comes on when the door is opened, and goes out when the door is closed.

Your vehicle also has a courtesy light in the ignition switch. This light comes on when you open the driver's door. It fades out in about 30 seconds after the door is closed.

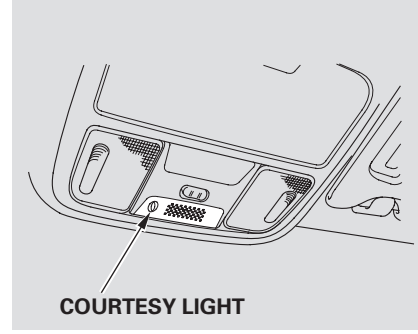

On EX and EX-V6 models
The courtesy light between the spotlights comes on when you turn the parking lights on. To adjust its brightness, turn the Select/Reset knob on the instrument panel.

The heating and air conditioning systems in your Honda provide a comfortable driving environment in all weather conditions.

The standard audio system has many features. This section describes those features and how to use them.

On all models except for 4-cylinder LX model
Your Honda has an anti-theft audio system that requires a code number to enable it.

Navigation Systems are available on U.S. models only.

The security system helps to discourage vandalism and theft of your Honda.

Vents, Heating, and A/C 108
Using the A/C 113
To Cool or Heat Automatically 115
Dual Temperature Control 117
Climate Control Sensors 119
Playing the Radio 120
Radio Reception 126
Playing the XM® Satellite Radio 128
Playing a CD 134
CD Changer 137
Protecting Your CDs 142
CD Player Error Messages 143
CD Changer Error Messages 144
Playing a Tape 146
Steering Wheel Controls 152
Radio Theft Protection 153
Setting the Clock 154
Security System 155
Cruise Control 156
HomeLink Universal Transceiver 159

LX, EX and LX-V6 models

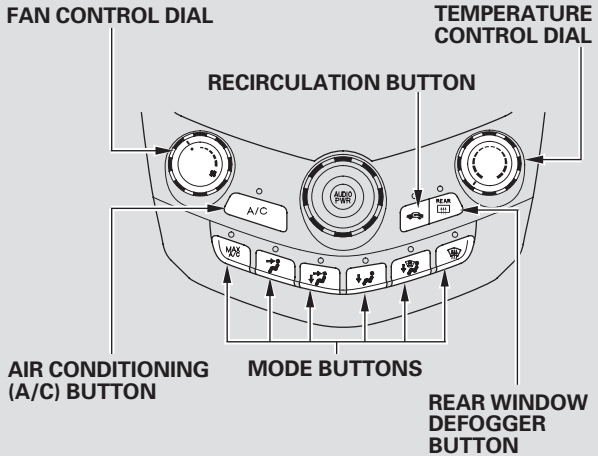

Without Navigation System
4-cylinder EX-L model and EX-V6 model

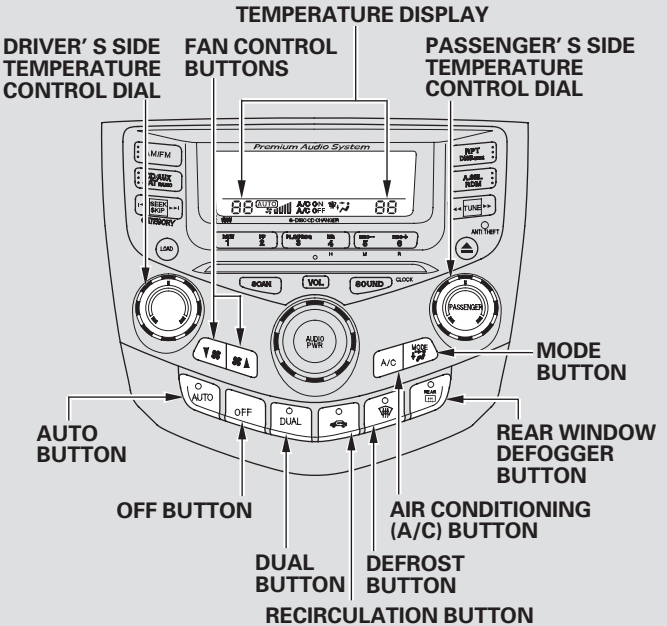

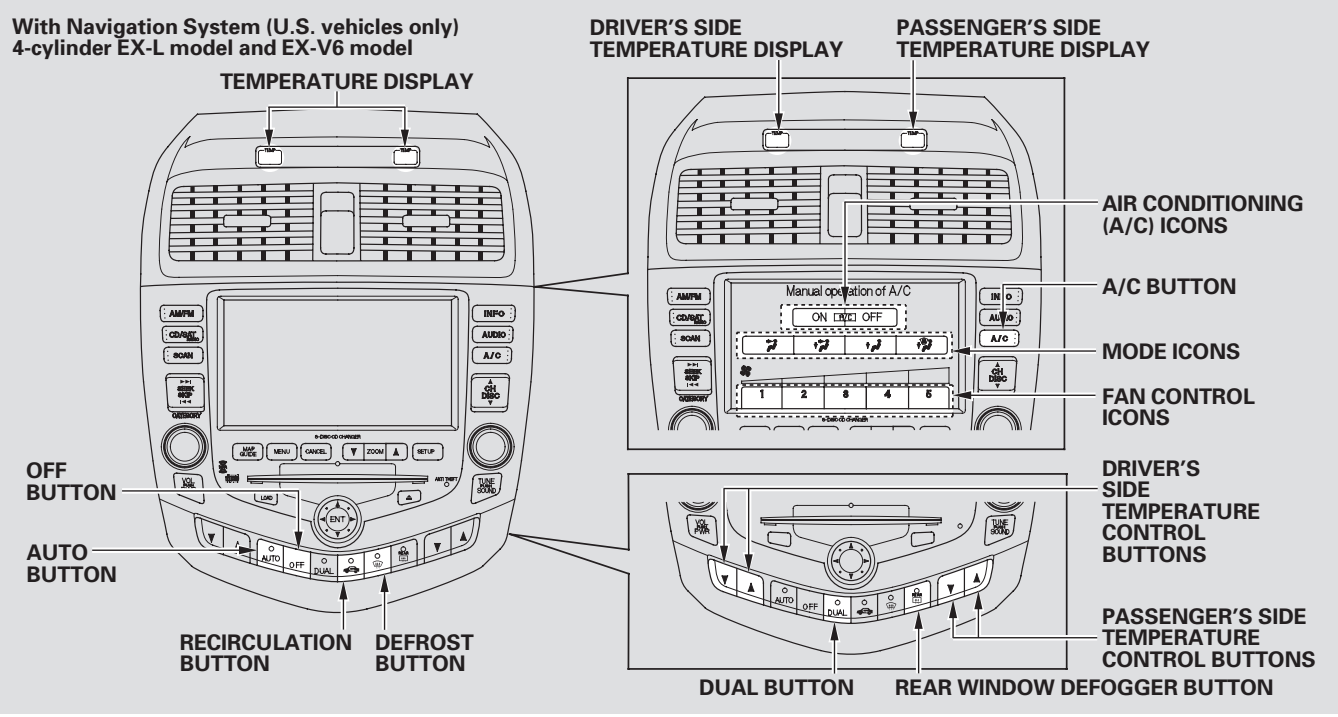
With Navigation System (U.S. vehicles only)
4-cylinder EX-L model and EX-V6 model

For EX-L (EX model with leather interior) and EX-V6 model, see page 115 for Automatic Climate Control and Manual Operations information.

Fan Control

On all models except for EX-L and EX-V6 models

Turn this dial clockwise to increase fan speed and increase the airflow.

On EX-L and EX-V6 models

For Vehicles without Navigation System

You can manually select the fan speed by pressing the fan control buttons (▼ or ▲). The fan speed is shown by vertical bars in the display.

For Vehicles with Navigation System

You can manually select the fan speed. Press the A/C button to view the display, then press any of the fan control icons.

Temperature Control

On all models except for EX-L and EX-V6 models

Turning this dial clockwise increases the temperature of the airflow.

On EX-L and EX-V6 models

The driver and passenger can select independent temperature settings.

For vehicles without Navigation System

Push the DUAL button. When the indicator in the button is lit, turn the dials to adjust the temperature.

For vehicles with Navigation System

Press the DUAL button. The green indicator in the button will come on. The driver and passenger can each select the temperature control buttons (▲ or ▼) to the desired setting.

When the indicator in the DUAL button is off, both sides adjust to the same temperature.

Dual Button

On EX-L and EX-V6 models

Press the DUAL button to select dual temperature control mode (see page 117).

Air Conditioning (A/C) Button/ Icons

On all models except for EX-L and EX-V6 models

This button turns the air conditioning on and off. The light above the button is on when the A/C is on.

On EX-L and EX-V6 models
For Vehicles without Navigation System
Press the A/C button to turn the air conditioning on and off. You will see A/C ON or A/C OFF selected in the display.

For Vehicles with Navigation System
Press the A/C button to view the display. Touching ON or OFF in the display turns the air conditioning on and off. You will see A/C ON or A/C OFF in the display.

On EX-L and EX-V6 models
When you turn the A/C off, the system cannot regulate the inside temperature if you set the temperature control below the outside temperature.

Recirculation Button
When the light in/above the button is on, air from the vehicle's interior is sent throughout the system again. When the light is off, air is brought in from the outside of the vehicle (Fresh Air mode).

The outside air intakes for the heating and cooling system are at the base of the windshield. Keep this area clear of leaves and other debris.

The system should be left in Fresh Air mode under almost all conditions. Keeping the system in Recirculation mode, particularly with the A/C off, can cause the windows to fog up.

Switch to Recirculation mode when driving through dusty or smoky conditions, then return to Fresh Air mode.

Rear Window Defogger Button REAR
This button turns the rear window defogger off and on (see page 73).

Mode Control
Use the mode control buttons or icons to select the vents the air flows from. Some air will flow from the dashboard corner vents in all modes.

On EX-L and EX-V6 models
For vehicles without Navigation System
Each time you press the MODE button, the display shows the mode selected.

For vehicles with Navigation System
Press the A/C button to view the display, then touch any of the mode icons on the display.

CONTINUED

Air flows from the center and corner vents in the dashboard.

Air flow is divided between the vents in the dashboard and the floor vents.

Air flows from the floor vents.

Air flow is divided between the floor vents and the defroster vents at the base of the windshield.

Air flows from the defroster vents at the base of the windshield.

When you select or , the system automatically switches to Fresh Air mode and turns on the A/C. In these modes, the A/C stays on with the indicator off.

When you select , the system automatically switches to Fresh Air mode.

MAX A/C Button

On all models except for EX-L and EX-V6 models

MAX A/C The system automatically turns on the A/C and switches to Recirculation mode. Air flows from the center and side vents in the dashboard.

Ventilation

The flow-through ventilation system draws in outside air, circulates it through the interior, then exhausts it through vents near the rear window.

1. Set the temperature control dial or the button to the lower limit.
2. Make sure the A/C is off.
3. Select and Fresh Air mode.
4. Set the fan to the desired speed.

Using the Heater

The heater uses engine coolant to warm the air. If the engine is cold, it will be several minutes before you feel warm air coming through the system.

Except for EX-L and EX-V6 models with Navigation System

1. Select .
   When you select , the system automatically switches to Fresh Air mode.
2. Set the fan to the desired speed.
3. Adjust the warmth of the air with the temperature control dial.

On EX-L and EX-V6 models with Navigation System

1. Press the A/C button, the Manual Operation of A/C screen will appear.
2. Select the desired mode and fan speed icons on the display.
3. Adjust the warmth with the temperature buttons (▲ or ▼).

Using the A/C

Air conditioning places an extra load on the engine. Watch the engine coolant temperature gauge (see page 67). If it moves near the red zone, turn off the A/C until the gauge reads normally.

Except for EX-L and EX-V6 models with Navigation System

1. Turn on the A/C by pressing the button. The light above the button comes on when a fan speed is selected. The display shows A/C ON.
2. Make sure the temperature control dial is set to the lower limit.
3. Select .
4. If the outside air is humid, select the Recirculation mode. If the outside air is dry, select the Fresh Air mode.
5. Set the fan to the desired speed.

On EX-L and EX-V6 models with Navigation System

1. Press the A/C button, the Manual Operation of A/C screen will appear.
2. Select the ON icon on the display.
3. Select the desired temperature and MODE selections. If the outside air is humid, select the Recirculation mode. If the outside air is dry, select the Fresh Air mode.

If the interior is very warm, you can cool it down more rapidly by partially opening the windows, turning on the A/C, and setting the fan to maximum speed in Fresh Air mode.

CONTINUED

On all models except for EX-L and EX-V6 models

To cool with the interior with MAX A/C:

1. Set the fan to the desired speed.
2. Select the MAX A/C mode. The system automatically turns on the A/C, selects , and switches to the Recirculation mode.
3. Make sure the temperature control dial is all the way to the left.

Dehumidify the Interior

Air conditioning, as it cools, removes moisture from the air. When used in combination with the heater, it makes the interior warm and dry.

1. Switch the fan on.
2. Turn on the air conditioning.
3. Select and Fresh Air mode.
4. Adjust the temperature control dial or buttons to your preference.

Once the engine is warmed up, this setting is suitable for all driving conditions.

To Defog and Defrost

To remove fog from the inside of the windows:

1. Set the fan to the desired speed or high for faster defrosting.
2. Select . When you select , the system automatically switches to Fresh Air mode and turns on the A/C. The A/C indicator will not come on, if it was off to start with.
3. Adjust the temperature control dial or buttons so the airflow feels warm.
4. Select REAR to help clear the rear window.
5. To increase airflow to the windshield, close the side vents.

When you switch to another mode from , the A/C stays on. Press the A/C button to turn it off.

To Remove Exterior Frost or Ice From the Windows

1. Select . The system automatically switches to Fresh Air mode and turns on the A/C. The A/C indicator will not come on, if it was off to start with.
2. Select .
3. Set the fan and temperature controls to maximum level.

To clear the windows faster, you can close the dashboard corner vents by rotating the wheel below it. This will send more warm air to the windshield defroster vents. Once the windshield is clear, select the Fresh Air mode to avoid fogging the windows.

For your safety, make sure you have a clear view through all the windows before driving.

To Cool or Heat Automatically

On EX-L and EX-V6 models

The Automatic Climate Control system can adjust the fan speed and airflow levels to maintain the interior temperature you select.

EX-L and EX-V6 models with Navigation System

In the AUTO mode, the vehicle's interior temperature is independently regulated for the driver and passenger. If the driver's side of the vehicle is getting too much sun, the system will adjust to a lower temperature.

Using Automatic Climate Control

On EX-L and EX-V6 models

1. Press the Auto button. With Navigation System, the light in the button comes on.
2. *Without Navigation System*
   Set the desired temperature by turning the Temperature Control dial. You will see AUTO in the system's display.

   With Navigation System
   Set the desired temperature by pressing the ▲ to raise the temperature or the ▼ to lower the temperature. The selected temperature will show in the upper display.

CONTINUED

The system automatically selects the proper mix of conditioned and/or heated air to raise or lower the interior temperature to the temperature you selected.

If you set the temperature to its lower limit (**Lo**) or its highest limit (**Hi**), the system runs at full cooling or heating only. It does not regulate the interior temperature.

In cold weather, the fan will not come on automatically until the heater starts to develop warm air.

Dual Temperature Control — When the indicator in the Dual button is on, the driver's side and passenger's side temperature can be controlled independently (see page 117).

Manual Operation

On EX-L and EX-V6 models

You can manually select various functions of the Climate Control System when it is in AUTO. All other features remain automatically controlled.

Without Navigation System

Manual selections will cause the word AUTO in the display to go out.

With Navigation System

If you press the A/C button next to the display, the manual selections will show in the display. Manual selection will cause the light in the AUTO button to turn off.

To Turn Everything Off

Except for EX-L and EX-V6 models

Turning the fan speed and temperature control dials all the way to left shuts off the system completely.

On EX-L and EX-V6 models

If you press OFF, the Climate Control system shuts off completely.

- Keep the system completely off for short periods only.
- To keep stale air and mustiness from collecting, you should have the fan running at all times.

With Navigation System

When the Climate Control System is turned OFF, the temperature in the upper display will also turn off.

On EX-L and EX-V6 models
Without Navigation System
Your vehicle has two temperature control dials, one for the driver, and one for the passenger.
With Navigation System
Your vehicle has four temperature control buttons, two for the driver, and two for the passenger.

The driver's side and the passenger's side can be controlled independently by adjusting these dials or buttons when the green indicator in the DUAL button is lit.

Temperature Control Dials/Buttons
Push AUTO or . The selected temperatures appears in the display (in the upper display with the navigation system). When the indicator in the DUAL button is off, you can adjust both sides to the same temperature by adjusting the driver's side temperature control dial or buttons.

Without Navigation System

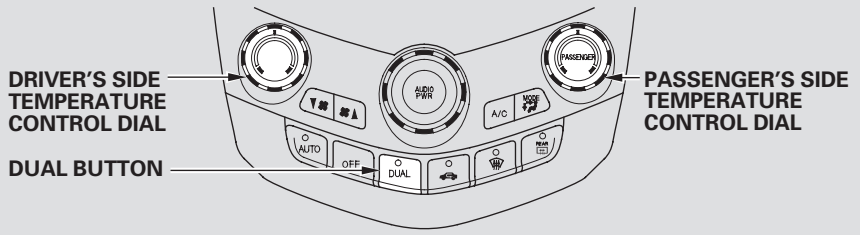

With Navigation System

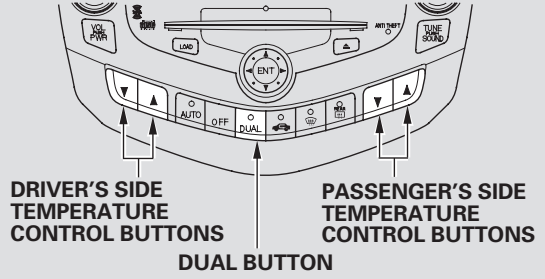

CONTINUED

Dual Temperature Control

To set the driver's side temperature to a different value than the passenger's, press the DUAL button, then turn the driver's control dial or press the ▲ or ▼ buttons on the driver's side. To set the passenger's side to a different value than the driver's, turn the passenger's control dial or press the ▲ or ▼ buttons on the passenger's side. You can adjust the passenger's side without pressing the DUAL button first.

When you set the temperature to its lower limit or its upper limit, it will be displayed as " Hi " or " Lo ".

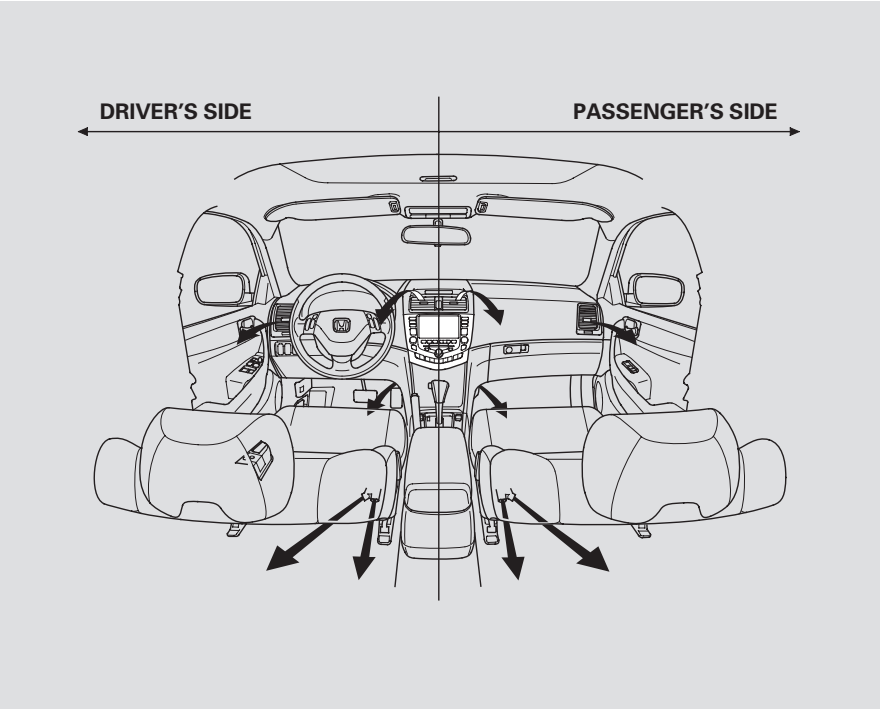

Sunlight and Temperature Sensors

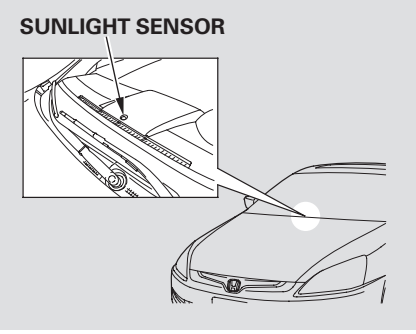

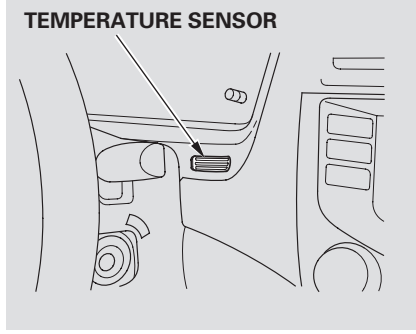

The climate control system has two sensors. A sunlight sensor is in the top of the dashboard, and a temperature sensor is next to the steering column. Do not cover the sensors or spill any liquid on them.

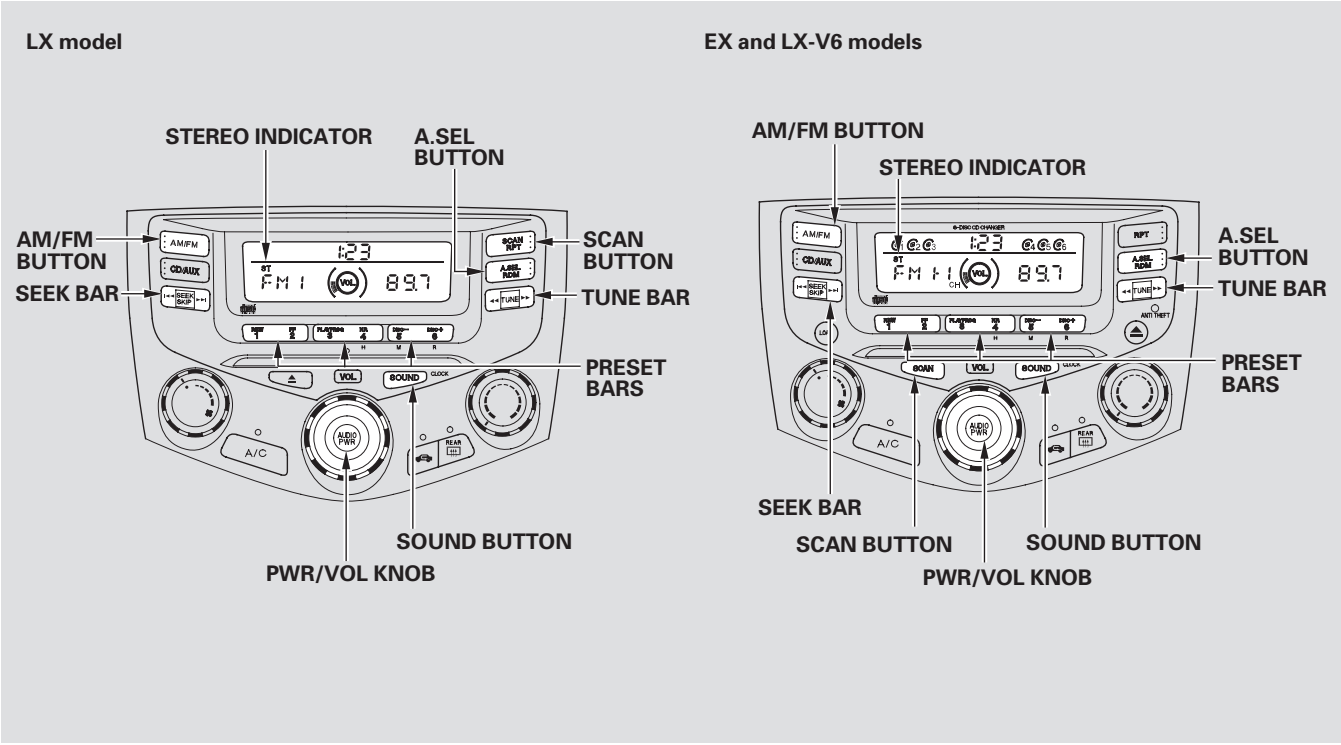
LX model
STEREO INDICATOR
A.SEL BUTTON
AM/FM BUTTON
SEEK BAR
SCAN BUTTON
TUNE BAR
PRESET BARS
SOUND BUTTON
PWR/VOL KNOB
EX and LX-V6models
AM/FM BUTTON
STEREO INDICATOR
A.SEL BUTTON
TUNE BAR
PRESET BARS
SEEK BAR
SCAN BUTTON
SOUND BUTTON
PWR/VOL KNOB

EX-L and EX-V6 models (Canadian Vehicles only)

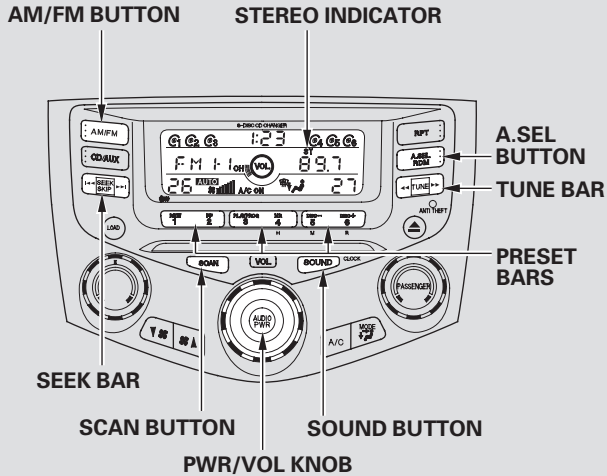

EX-L and EX-V6 models without Navigation System (U.S. Vehicles only)

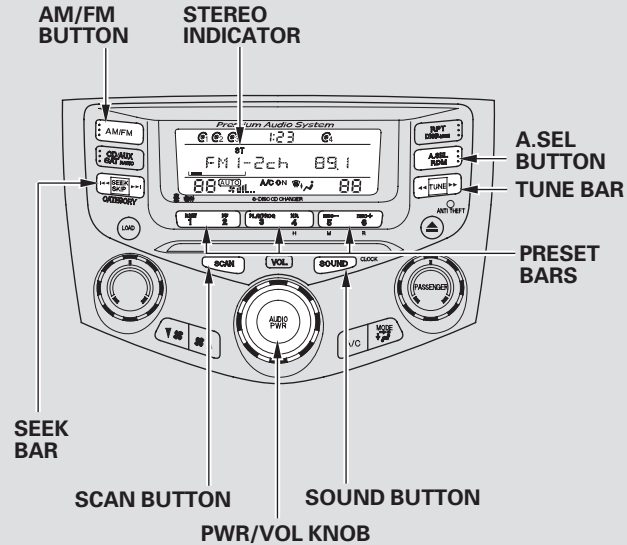

CONTINUED

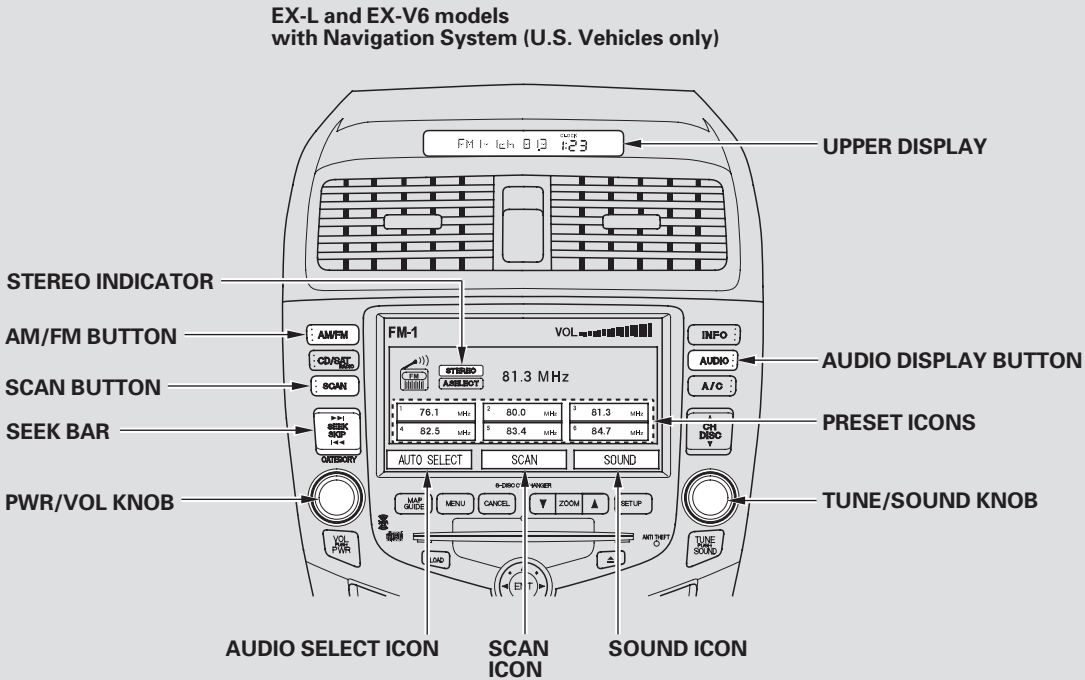
EX-L and EX-V6 models
with Navigation System (U.S. Vehicles only)
UPPER DISPLAY
STEREO INDICATOR
AM/FM BUTTON
SCAN BUTTON
SEEK BAR
PWR/VOL KNOB
AUDIO DISPLAY BUTTON
PRESET ICONS
TUNE/SOUND KNOB
AUDIO SELECT ICON
SCAN ICON
SOUND ICON
FM-1
VOL
STEREO
AUDIO SELECT
81.3 MHz
76.1
80.0
81.3
82.5
83.4
84.7
AUTO SELECT
SCAN
SOUND
AM/FM
CD/SAT
SCAN
SEEK SKIP
CATEGORY
INFO
AUDIO
A/C
CH DISC
MAP GUIDE
MENU
CANCEL
ZOOM
SETUP
VOL PWR
TUNE SOUND
LOAD
ANTI THEFT

To Play the Radio
The ignition switch must be in the ACCESSORY (I) or ON (II) position. Turn the system on by pushing the PWR/VOL knob or the AM/FM button. Adjust the volume by turning the same knob.

For Vehicles with Navigation System
Pushing the AUDIO DISPLAY button will also turn on the system.

The band and frequency that the radio was last tuned to is displayed. To change bands, press the AM/FM button. On the FM band, ST will be displayed if the station is broadcasting in stereo. Stereo reproduction on AM is not available.

XM Satellite Radio information is available on page 128 .

To Select a Station
You can use any of five methods to find radio stations on the selected band: **TUNE, SEEK, SCAN,** the preset bars/icons, and **AUTO SELECT**.

TUNE — Use the TUNE bar or knob to tune the radio to a desired frequency. Press the ►► side of the bar or turn the knob to the right to tune to a higher frequency, and press the ◄◄ side or turn the knob to the left to tune to a lower frequency.

SEEK — The SEEK function searches up and down from the current frequency to find a station with a strong signal. To activate it, press the |◄◄ or ►►| side of the bar, then release it.

SCAN — The SCAN function samples all stations with strong signals on the selected band. To activate it, press the SCAN button, then release it, or touch the SCAN icon on vehicles with navigation system. You will see SCAN in the display. The system will scan for a station with a strong signal. When it finds one, it will stop and play that station for about five seconds.

If you do nothing, the system will the scan for the next strong station and play it for five seconds. When it plays a station you want to listen to, press the SCAN button or touch the SCAN icon again.

CONTINUED

Preset — Each side of the bars (1—6) or preset icon can store one frequency on AM, and two frequencies on FM.

1. Select the desired band, AM or FM. FM1 and FM2 let you store two frequencies with each side of the preset bar or each preset icon. *For Vehicles with Navigation System* First push the AUDIO DISPLAY button to view the preset icons.

2. Use the TUNE, SEEK, or SCAN function to tune the radio to a desired station.

3. Pick a preset number (1—6), and hold it until you hear a beep. Press the left or right side of the bar or icon and hold it until you hear a beep.

4. Repeat steps 1 to 3 to store a total of six stations on AM and twelve stations on FM.

The preset frequencies will be lost if your vehicle's battery goes dead, is disconnected, or the radio fuse is removed.

AUTO SELECT — If you are traveling far from home and can no longer receive your preset stations, you can use the Auto Select feature to find stations in the local area.

Press the A. SEL button or touch the AUTO SELECT icon. "A. SEL" flashes in the display (the upper display on vehicles with navigation system), and the system goes into scan mode for several seconds. It stores the frequencies of six AM, and twelve FM stations in the preset bars or icons.

You will see a "0" displayed after pressing a preset bar or icon if Auto Select cannot find a strong station for every preset bar or icon.

If you do not like the stations Auto Select has stored, you can store other frequencies on the preset bars or icons. Use the TUNE, SEEK, or SCAN function to find stations, then store them in the preset bars or icons as described previously.

To turn off Auto Select, press the A.SEL button or touch the AUTO SELECT icon. This restores the presets you originally set.

Adjusting the Sound

Press the SOUND button repeatedly to display the Bass (BAS), Treble (TRE), Balance (BAL), and Fader (FAD) setting. On vehicles with navigation system, touch the SOUND icon or press the TUNE knob.

On vehicles with navigation system
If you want to adjust the sound while the radio/CD is playing, push the AUDIO DISPLAY button, then touch the SOUND icon in the display.

Balance/Fader — These two modes adjusts the strength of the sound coming from each speaker. BAL adjusts the side-to-side strength, while FAD adjusts the front-to-back strength.

Treble/Bass — Use the TRE/BAS modes to adjust the tone to your liking.

On vehicles without navigation system
Each mode is shown in the display as it changes. Turn the VOLUME knob to adjust the setting to your liking. When the level reaches the center, you will see " C " in the display.

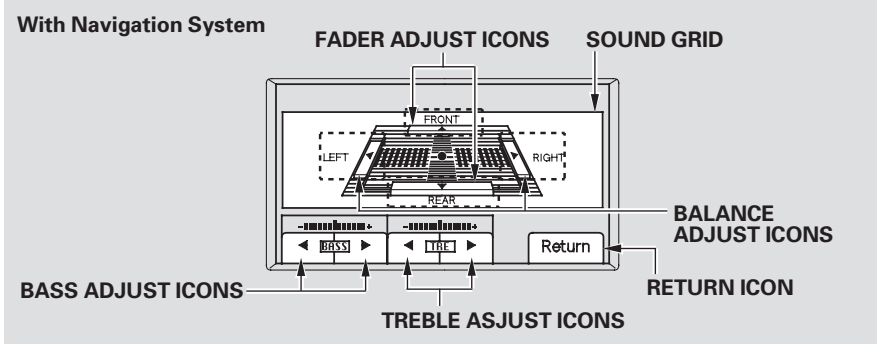

On vehicles with navigation system
Touch the arrows next to the BAS or TRE icons. The adjustment shows you the current setting. Touch the left or right bars on the sound grid. Balance is equalized when the vertical lines are centered on the grid. Touch the front or rear bars on the sound grid. The fader is equalized when the horizontal lines are centered on the grid.

The system will automatically return the display to the selected audio mode about five seconds after you stop adjusting a mode. On vehicles with navigation system, touch the RETURN icon to go back to the audio screen.

Radio Frequencies
Your Honda's radio can receive the complete AM and FM bands. Those bands cover these frequencies:

AM band:
530 to 1,710 kilohertz
FM band:
87.7 to 107.9 megahertz

Radio stations on the AM band are assigned frequencies at least ten kilohertz apart (530, 540, 550). Stations on the FM band are assigned frequencies at least 0.2 megahertz apart (87.9, 88.1, 88.3).

Stations must use these exact frequencies. It is fairly common for stations to round-off the frequency in their advertising, so your radio could display a frequency of 100.9 even though the announcer may identify the station as "FM101."

Radio Reception
How well your Honda's radio receives stations is dependent on many factors, such as the distance from the station's transmitter, nearby large objects, and atmospheric conditions.

A radio station's signal gets weaker as you get farther away from its transmitter. If you are listening to an AM station, you will notice the sound volume becoming weaker, and the station drifting in and out. If you are listening to an FM station, you will see the stereo indicator flickering off and on as the signal weakens. Eventually, the stereo indicator will go off and the sound will fade completely as you get out of range of the station's signal.

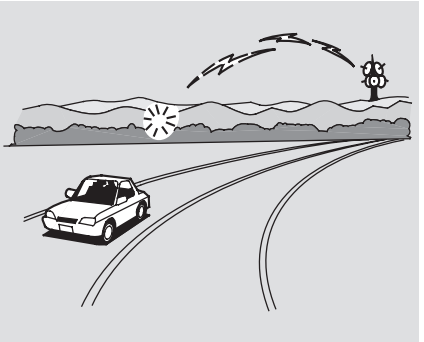

Driving very near the transmitter of a station that is broadcasting on a frequency close to the frequency of the station you are listening to can also affect your radio's reception. You may temporarily hear both stations, or hear only the station you are close to.

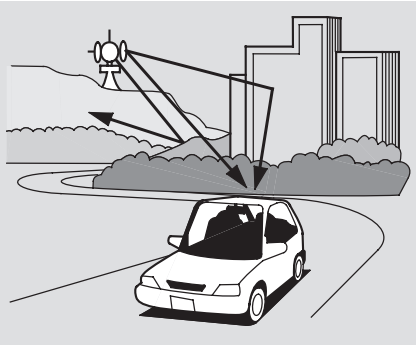

Radio signals, especially on the FM band, are deflected by large objects such as buildings and hills. Your radio then receives both the direct signal from the station's transmitter, and the deflected signal. This causes the sound to distort or flutter. This is a main cause of poor radio reception in city driving.

Radio reception can be affected by atmospheric conditions such as thunderstorms, high humidity, and even sunspots. You may be able to receive a distant radio station one day and not receive it the next day because of a change in conditions.

Electrical interference from passing vehicles and stationary sources can cause temporary reception problems.

As required by the FCC:
Changes or modifications not expressly approved by the party responsible for compliance could void the user's authority to operate the equipment.

U.S. EX-L and EX-V6 models

Without Navigation System

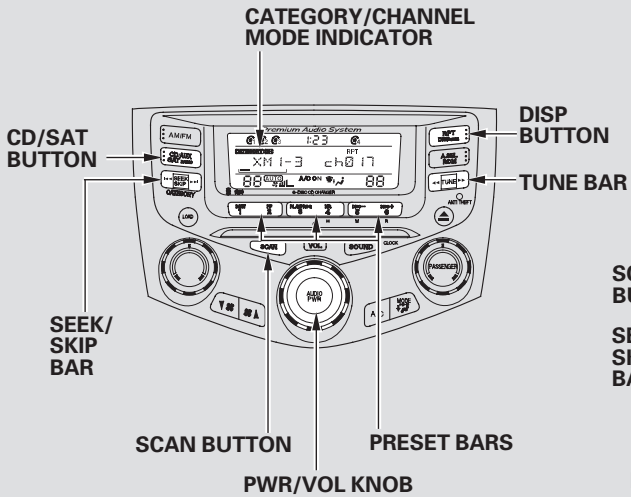

With Navigation System

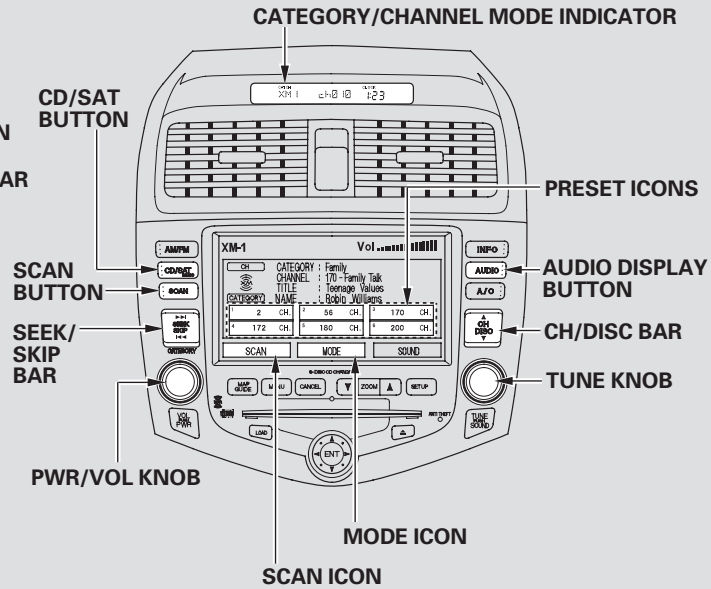

Satellite Digital Radio
U.S. EX-L and EX-V6 models
Your vehicle is capable of receiving XM® Satellite Radio anywhere in the United States except Hawaii, Alaska, and Canada.

XM® is a registered trademark of XM Satellite Radio Inc.
Satellite radio is available in U.S. models only.

To Play XM® Satellite Radio
The ignition must be in the ACCESSORY (I) or ON (II) position. Turn the system on:

Vehicles with Navigation System
Push any of the following: PWR/VOL knob, the CD/SAT, or AUDIO button.

Vehicles without Navigation System
Push any of the following: PWR/VOL knob or the CD/SAT button.

Turn the PWR/VOL knob to adjust the volume.

To Select a Channel
When in the satellite radio mode, you can use any of three methods to find channels: TUNE, SEEK/SKIP (CATEGORY), and SCAN.

TUNE –
Vehicles with Navigation System
Turn the TUNE knob to change channels. Turn the knob right for higher numbered channels and left for lower numbered channels.

Vehicles without Navigation System
Press the TUNE bar to change channel selections. Press ►► for higher numbered channels and ◄◄ for lower numbered channels.

CONTINUED

SEEK/SKIP (CATEGORY) — The SEEK/SKIP function selects the various categories in XM, such as Jazz/Blues, Rock, Classical, etc. Push the ▶▶| to change the category forward. Push the |◀◀ to change the category backward. To search for channels within a category, turn the TUNE knob clockwise or press the TUNE bar ▶▶ .

Vehicles with Navigation System
DISP — Press and release this button to change the display. The display will change in the following sequence: channel name, channel number, category, artist name, and music title.

SCAN — The SCAN function samples all channels for 5 seconds. To activate the function, push the SCAN button. Push it again to get out of the sequence.

Preset — Each preset icon or each side of the preset bar can store one channel in XM1 and one in XM2.

1. Push the SAT button, you will see XM1 or XM2.
2. Use the TUNE, SEEK or SCAN function to tune the radio to a desired channel.
3. Pick a preset icon or number and hold it until you hear a beep.
4. Repeat step 1 to 3 to store a total of six stations on XM1 and six on XM2.

On vehicles with navigation system
Once your XM channels are preset, pressing either side of the CH/DISC bar will select your preset channels.

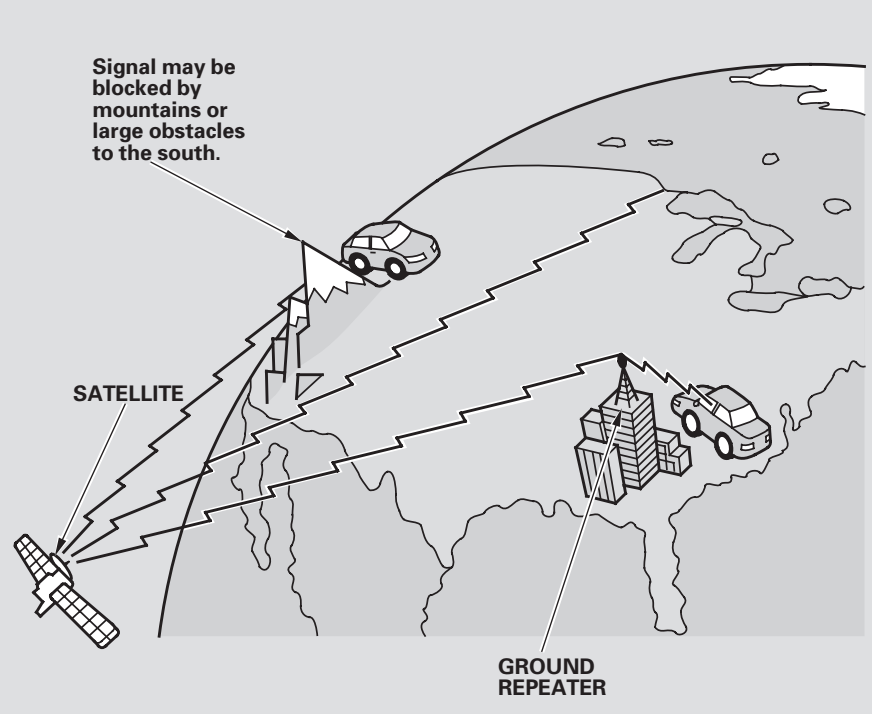

Satellite Radio Signals
Satellite radio receives signals from two satellites to produce clear, high-quality digital reception. It offers many channels in several categories. Along with a large selection of different types of music, satellite radio also allows you to view channel and category selections in the audio display.

The XM satellites are in orbit over the equator; therefore, objects south of the vehicle may cause satellite reception interruptions. To help compensate for this, ground-based repeaters are placed in major metropolitan areas. Satellite signals are more likely to be blocked by tall buildings and mountains the farther north you travel from the equator.

Depending on where you drive, you may experience reception problems. Interference can be caused by any of these conditions:

- Driving on the south side of an east/west mountain road with a mountain on the south side of the road.
- Driving on the north side of a large commercial truck on an east/west road
- Driving in the tunnels
- Driving on a road beside a vertical wall, steep cliff or hill to the south of you
- Driving on the lower level of a multi-tiered road
- Driving on a single lane road alongside dense trees taller than 50 ft. (15 m) to the south of you

There may be other geographic situations that could affect satellite radio reception.

As required by the FCC:
Changes or modifications not expressly approved by the party responsible for compliance could void the user's authority to operate the equipment.

Receiving Satellite Radio Service
If your XM Radio service has expired or you purchased your vehicle from a previous owner, you can listen to a sampling of the broadcasts available on XM Satellite Radio. With the ignition switch in the ACCESSORY (I) or ON (II) position, push the PWR/VOL knob to turn on the audio system and press the CD/SAT button. A variety of music types and styles will play.

If you decide to purchase XM Satellite Radio service, contact XM Radio at www.xmradio.com, or at 1-800-852-9696. You will need to give them your radio I.D. number and your credit card number.
To get your XM Satellite radio ID number:

Turn the TUNE knob or press the TUNE bar until “0” appears in the display. Your ID number will appear in the display.

After you have registered with XM Radio, keep your audio system in the SAT Radio mode while you await activation. This should take about 30 minutes.

While awaiting activation, make sure your vehicle remains in an open area with good reception. Once your audio system is activated, “category” or “CH” will appear in the display and you will be able to listen to XM Radio broadcasts. XM Radio will continue to send an activation signal to your vehicle for at least 12 hours from activation request. If the service has not been activated after 36 hours, contact XM Radio.

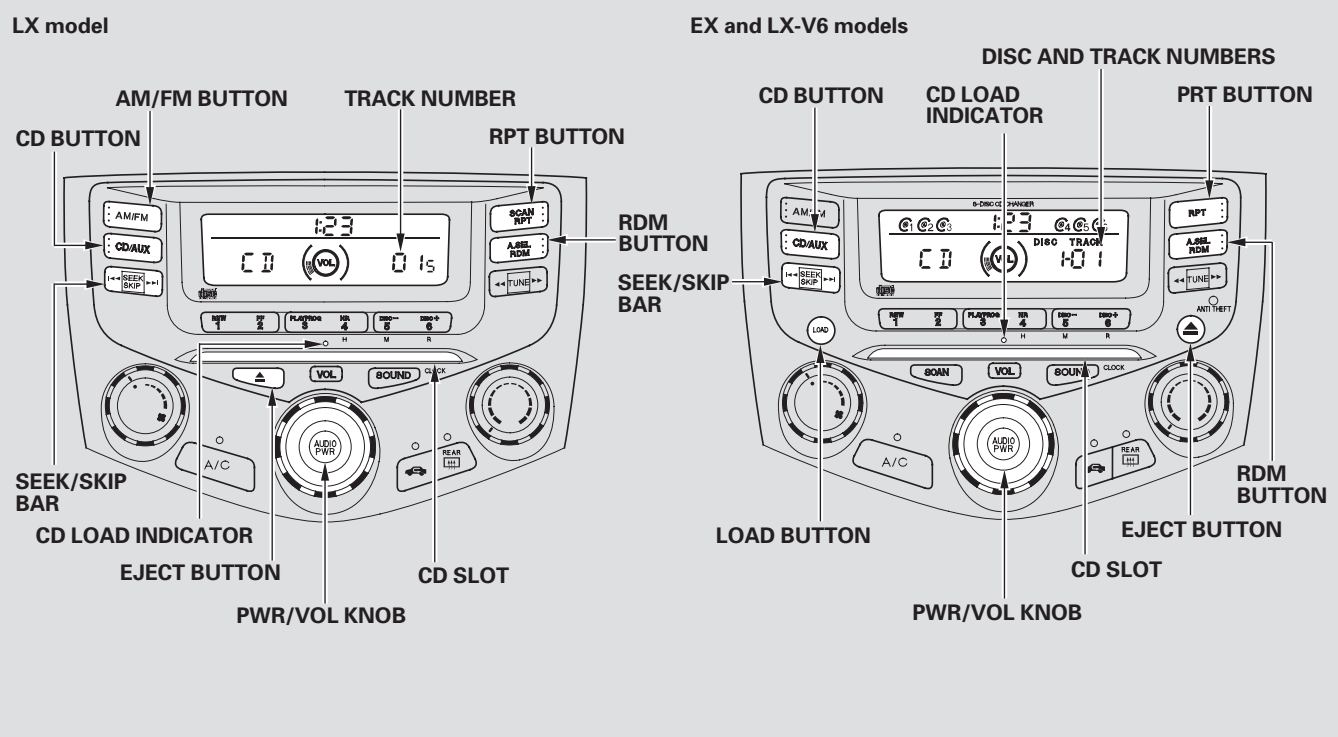
LX model
AM/FM BUTTON
TRACK NUMBER
CD BUTTON
RPT BUTTON
RDM BUTTON
SEEK/SKIP BAR
SEEK/SKIP BAR
CD LOAD INDICATOR
EJECT BUTTON
CD SLOT
PWR/VOL KNOB
EX and LX-V6 models
DISC AND TRACK NUMBERS
CD BUTTON
CD LOAD INDICATOR
PRT BUTTON
RDM BUTTON
EJECT BUTTON
LOAD BUTTON
CD SLOT
PWR/VOL KNOB

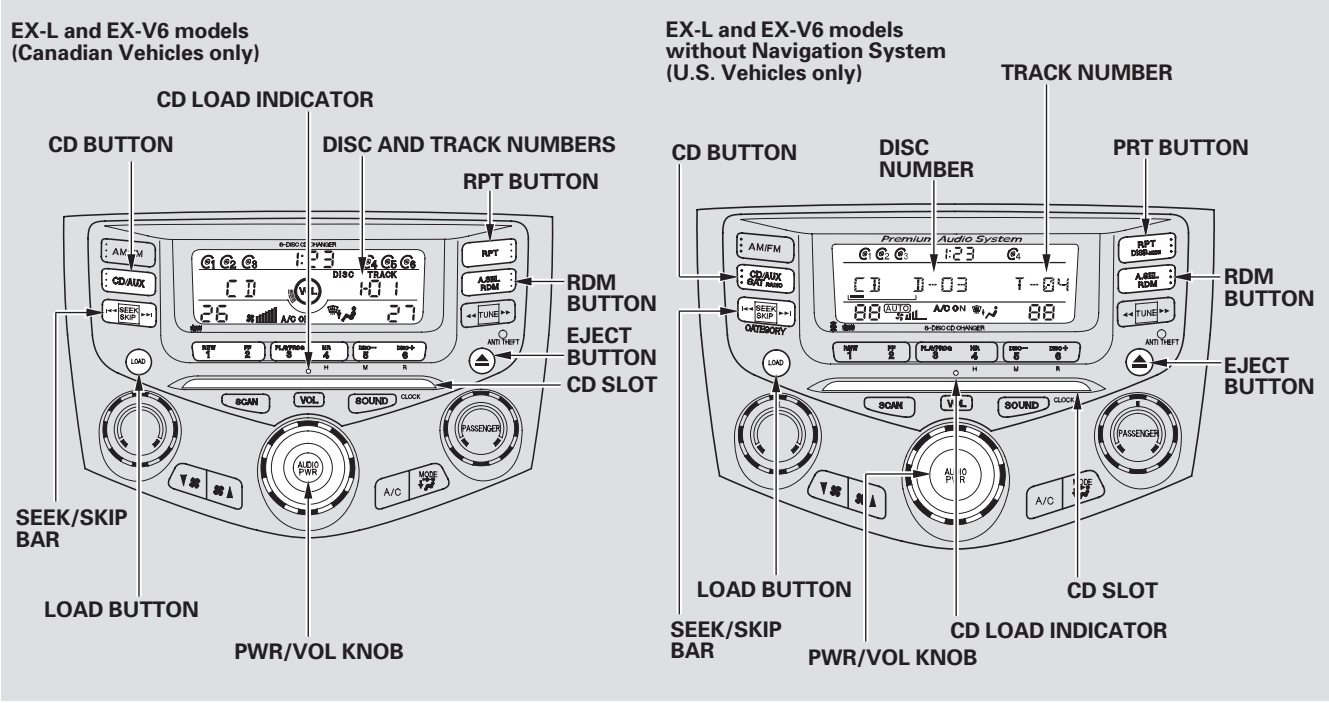
EX-L and EX-V6 models
(Canadian Vehicles only)
CD LOAD INDICATOR
CD BUTTON
DISC AND TRACK NUMBERS
RPT BUTTON
RDM BUTTON
EJECT BUTTON
CD SLOT
SEEK/SKIP BAR
LOAD BUTTON
PWR/VOL KNOB
EX-L and EX-V6 models
without Navigation System
(U.S. Vehicles only)
TRACK NUMBER
CD BUTTON
DISC NUMBER
PRT BUTTON
RDM BUTTON
EJECT BUTTON
LOAD BUTTON
CD SLOT
SEEK/SKIP BAR
CD LOAD INDICATOR
PWR/VOL KNOB

CONTINUED

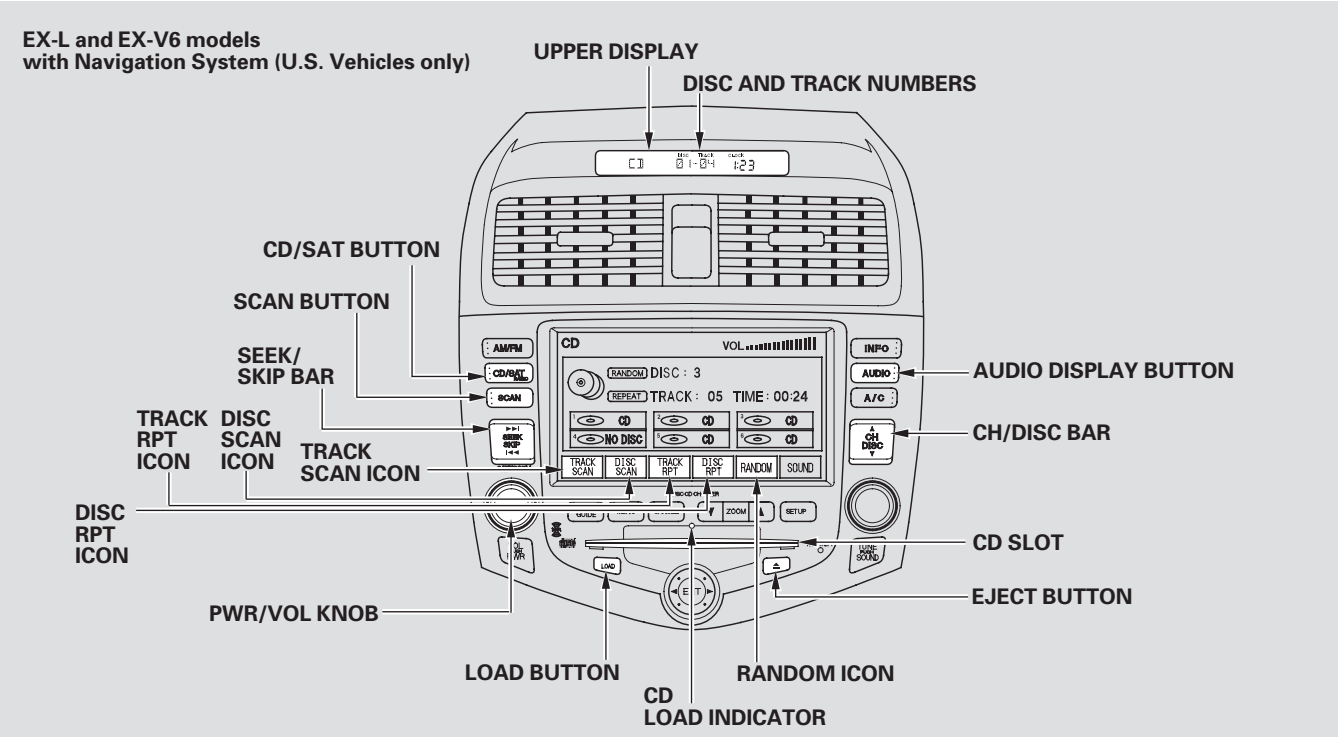
EX-L and EX-V6 models
with Navigation System (U.S. Vehicles only)
UPPER DISPLAY
DISC AND TRACK NUMBERS
CD/SAT BUTTON
SCAN BUTTON
SEEK/
SKIP BAR
TRACK
RPT
ICON
DISC
SCAN
ICON
TRACK
SCAN ICON
DISC
RPT
ICON
PWR/VOL KNOB
LOAD BUTTON
CD
LOAD INDICATOR
RANDOM ICON
CD SLOT
EJECT BUTTON
AUDIO DISPLAY BUTTON
CH/DISC BAR
AM/FM
CD/SAT
SCAN
SEEK
SKIP
CD
VOL
RANDOM
DISC : 3
REPEAT
TRACK : 05 TIME : 00:24
NO DISC
TRACK SCAN
DISC SCAN
TRACK RPT
DISC RPT
RANDOM
SOUND
INFO
AUDIO
A/C
CH
DISC
ZOOM
SETUP
LOAD
ENTER

To Play a CD
To load or play CD's, the ignition switch must be in the ACCESSORY (I) or ON(II) position.
You operate the CD player/CD changer with the same controls used for the radio. To select the CD player/CD changer, press the CD button. The number of the track playing is shown in the display. With the in-dash CD changer, the disc and track numbers are displayed. The system will continuously play a CD until you change modes.

LX model
Insert a CD into the CD slot. The drive will pull the CD in the rest of the way to play it. When the system reaches the end of the disc, it will return to the beginning and play the disc again.

You can also play 3-inch (8-cm) discs without using an adapter ring.

To play the radio when a CD is playing, press the AM/FM button. Press the CD button again to switch back to the CD player.

To play the tape when a CD is playing, insert a tape in the player (optional). If a tape is in the player, press the AUX button. Press the CD button again to switch back to the CD player. The cassette player is optional on all U.S. models.

For vehicles with Satellite Radio
To listen to satellite radio when a CD is playing, press the CD/SAT button.

If you turn the system off while a CD is playing, either with the PWR/VOL knob or by turning off the ignition, the disc will stay in the drive. When you turn the system back on, the CD will begin playing where it left off.

For vehicles with in-dash CD changer
1. Press the LOAD button until you hear a beep and see "LOAd" in the display (in the upper display on vehicles with navigation system).

2. The disc number/icon for an empty position is highlighted and the red light starts blinking.

3. Insert the disc into the CD slot when the green CD load indicator comes on. Insert it only about halfway; the drive will pull it in the rest of the way. You will see "BUSY" in the display as the CD load indicator turns red and blinks as the CD is loaded.

   You cannot load and play 3-inch (8-cm) discs in this system.

CONTINUED

4. When the CD load indicator turns green and “LOAd” appears in the screen again, insert the next CD in the slot.

5. Repeat this until all six positions are loaded. If you are not loading all six positions, the system begins playing the last CD loaded.

You can also load a CD into an empty position while a CD is playing by pressing the appropriate side of a preset bar or touching a disc icon. The system stops playing the current CD and starts the loading sequence. It plays the CD just loaded.

You operate the CD changer with the same controls used for the radio. The numbers of the disc and track playing are shown in the display. On vehicles with navigation system, these numbers also appear in the upper display.

On vehicles with in-dash CD changer
To select a different disc, press the appropriate side of a preset bar (1–6) or use the Preset 5 (DISC –) to select the previous disc or Preset 6 (DISC +) to select the next disc in sequence. On vehicles with navigation system, touch the appropriate disc icon or press the ▲ or ▼ side of the CH/DISC bar. If you select an empty position in the CD changer, the system will try to load the CD in the next available slot.

For Vehicles without Navigation System
SEEK/SKIP – Each time you press and release ▶▶| side, the player skips forward to the beginning of the next track. Press and release |◀◀ side, to skip backward to the beginning of the current track. Press it again to skip to the beginning of the previous track.

To move rapidly within a track, press and hold the ▶▶| or |◀◀ side.

SCAN – The SCAN function samples all the tracks on the selected disc in the order they are recorded on the CD. To activate it, press and release the SCAN button. You will see SCAN in the display. You will get a 10 second sampling of each track on the selected CD. Press the SCAN button again to get out of the system.

Except for LX model
D-SCAN – This function samples each first track of all the discs in the in-dash CD changer in the order they are stored. To activate it, select the D-SCAN mode by pressing and holding the SCAN button. You will see D-SCAN in the display. You will get a 10 second sampling of the first track on each CD. Press the SCAN button again to get out of the system.

REPEAT — To continuously replay a track, press and release the RPT button. You will see RPT in the display. Press the RPT button again to turn it off.

Except for LX model
D-REPEAT — To continuously replay the current disc, press and hold the RPT button. You will see D-RPT in the display. Press the RPT button again to turn it off.

RANDOM — Press and release the RDM button to play the tracks in random order. You will see RDM in the display. Press the RDM button again to return to normal play.

For Vehicles with Navigation System
To use the controls, press the AUDIO DISPLAY button, the control icons will appear on the screen.

TRACK SCAN — When you touch this icon on the audio display or press the SCAN button, you will get a 10 second sampling of each track on the current CD. You will see TRACK SCAN highlighted on the audio screen and SCAN in the upper display. Press the icon or button again to get out of the system.

DISC SCAN — When you touch the DISC SCAN icon on the audio display, the system gives you a 10 second sampling of the first track on each disc in the in-dash CD changer. You will see DISC SCAN highlighted on the audio screen and D-SCAN in the upper display. Touch the icon again to get out of the system.

TRACK RPT — When you touch the TRACK RPT icon, the system continuously plays the same track. You will see TRACK RPT highlighted on the audio screen and RPT in the upper display. Press the icon again to get out of track repeat.

DISC RPT — When you touch the DISC RPT icon on the audio display, the system continuously replays the current CD. You will see DISC RPT highlighted on the audio screen and D-RPT in the upper display. Touch the icon to turn the feature off.

RANDOM — When you touch the RANDOM icon on the audio display, the system plays the tracks on the current CD in random order. You will see RANDOM highlighted on the audio screen and RDM in the upper display. To turn this feature off, touch RANDOM again or select a different disc icon.

CONTINUED

SEEK/SKIP — Each time you press and release ▶▶| , the player skips forward to the beginning of the next track. Press and release |◀◀ , to skip backward to the beginning of the current track. Press it twice to skip to the beginning of the previous track.

To move rapidly within a track, press and hold the ▶▶| or |◀◀ .

CH/DISC — Press ▲ or ▼ to select an icon and play the disc.

To Stop Playing a CD

On LX model

Press the eject button (⏏) to remove the CD. If you eject the CD, but do not remove it from the slot, the system will automatically reload the CD after 15 seconds and put it in pause mode. To begin playing, press the CD button.

Except for EX-L and EX-V6 models in the U.S.

Press the AM/FM button to switch to the radio while a CD is playing. To play the CD, press the CD button.

On EX-L and EX-V6 models in the U.S.

Press the AM/FM or CD/SAT button to switch to the radio or satellite radio while a CD is playing. To play the CD, press the CD button again.

If tape is in the optional tape player, press the AUX button to switch to the tape while a CD is playing. Press the CD button again to switch back to the CD player.

If you turn the system off while a CD is playing, either with the PWR/VOL knob or by turning off the ignition, the disc will stay in the drive. When you turn the system back on, the CD will begin playing where it left off.

Removing CD's From the In-dash CD Changer

Except for LX model

To remove the disc currently in play, press the EJECT (⏏) button. When a disc is removed from a slot, the system automatically begins the load sequence so you can load another CD in that position. If you do not remove the disc from the changer within 15 seconds, the system returns to the previous mode (AM/FM or satellite radio). The disc will reload into the system and will remain there in a pause mode.

To remove a different disc from the changer, first select it with the appropriate preset bar, or the appropriate icon or the CH/DISC bar. When that CD begins playing, press the eject button. Continue pressing the EJECT button to remove all the discs from the changer.

You can also eject discs when the ignition switch is off. The disc that was last selected is ejected first.

Operating the Optional CD Changer

An optional six or eight disc CD changer is available for your vehicle from your Honda dealer.
This disc changer uses the same controls used for the in-dash CD player/changer or the radio.

Load the desired CDs in the magazine, and load the magazine in the changer according to the instructions that came with the unit.

To select the CD changer, press the CD button. The disc and track numbers will be displayed. To select a different disc, use the Preset 5 (DISC −) side or Preset 6 (DISC +) side of the preset bar. To select the previous disc, press the Preset 5 (DISC −) or Preset 6 (DISC +) to select the next disc in sequence.

If you select an empty slot in the magazine, the changer will search for the next available CD to load and play.

On LX model, if there are no CDs in the changer, the display will flash, and you will have to select another mode.

Protecting Your CDs

General Information

- When using CD-R discs, use only high quality CDs labeled for audio use.
- When recording a CD-R, the recording must be closed for it to be used in CD players.
- CD-RW discs will not work in this unit.
- Play only standard round CDs. Odd-shaped CDs may jam in the drive or cause other problems.
- Handle your CDs properly to prevent damage and skipping.

Protecting CDs

When a CD is not being played, store it in its case to protect it from dust and other contamination. To prevent warpage, keep CDs out of direct sunlight and extreme heat.

To clean a CD, use a clean soft cloth. Wipe across the CD from the center to the outside edge.

A new CD may be rough on the inner and outer edges. The small plastic pieces causing this roughness can flake off and fall on the recording surface of the CD, causing skipping or other problems. Remove these pieces by rubbing the inner and outer edges with the side of a pencil or pen.

Never try to insert foreign objects in the CD player or the magazine.

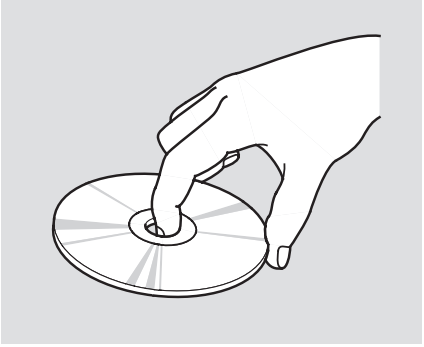

Handle a CD by its edges; never touch either surface. Do not place stabilizer rings or labels on the CD. These, along with contamination from fingerprints, liquids, and felt-tip pens, can cause the CD to not play properly, or possibly jam in the drive.

On LX model

If you see an error message in the display while playing a CD, find the cause in the chart to the right. If you cannot clear the error message, take your vehicle to a Honda dealer.

Error Message	Cause	Solution
CD DISC	FOCUS Error	Press the eject button and pull out the CD. Check if it is inserted correctly in the CD player. Make sure the CD is not scratched or damaged.
CD ERR	Mechanical Error	Press the eject button and pull out the CD. Check the CD for damage or deformation. If the CD cannot be pulled out or the error message does not disappear after the CD is ejected, see a Honda dealer.
CD Hot	High Temperature	Will disappear when the temperature returns to normal.

CD Changer Error Messages

If you see an error message in the display while operating the CD changer, find the cause in the following charts. If you cannot clear the error message, take your vehicle to a Honda dealer.

Except for LX model

Error Message		Cause	Solution
①	CDC DISC	FOCUS Error	Press the CD eject button and pull out the CDs. Check for an error message, and insert the CDs again. If the message does not disappear or the CDs cannot be pulled out, see a Honda dealer.
②	CD DISC		
①	CDC ERR	Mechanical Error	Press the CD eject button and pull out the CDs. Check for an error message, and insert the CDs again. If the message does not disappear or the CDs cannot be pulled out, see a Honda dealer.
②	CD ERR		
①	CDC EJEC	No CD in the CD Changer	Insert CDs.
②	CD HOt	High Temperature	Will Disappear when the temperature returns to normal.

① : Without Navigation System
② : With Navigation System

Optional CD Changer for LX model

Error Message	Cause	Solution
CD2 DISC	FOCUS Error	Press the magazine eject button and pull it out, and check for an error message, and insert the magazine again. If the message does not disappear or the magazine cannot be pulled out, see a Honda dealer.
CD2 NO	No CD in the CD Magazine	Insert CD.
CD2 ERR	Mechanical Error	Press the magazine eject button and pull it out, and check for an error message, and insert the magazine again. If the message does not disappear or the magazine cannot be pulled out, see a Honda dealer.
CD2 HOt	High Temperature	Will disappear when the temperature returns to normal.
CD2 EJEC	No CD magazine in the CD Changer	Insert CD magazine.

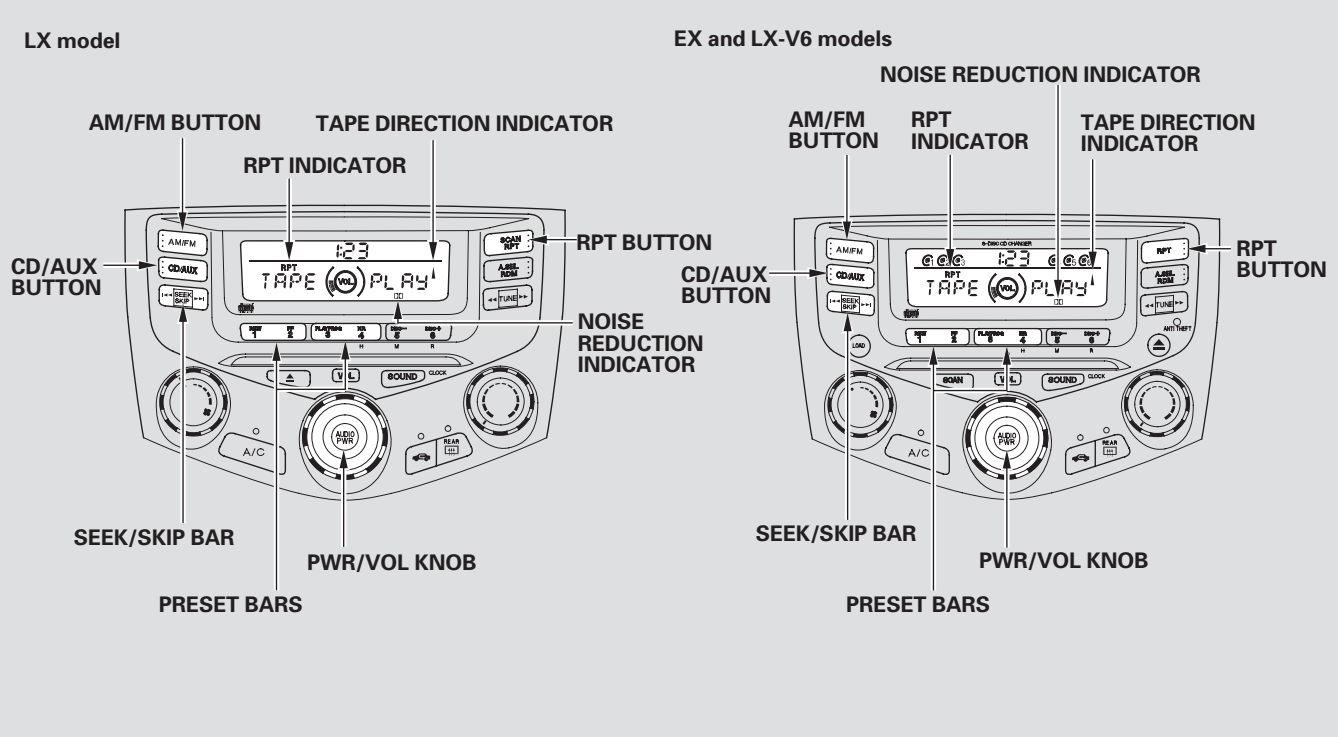
LX model
AM/FM BUTTON
TAPE DIRECTION INDICATOR
RPT INDICATOR
CD/AUX BUTTON
RPT BUTTON
NOISE REDUCTION INDICATOR
SEEK/SKIP BAR
PWR/VOL KNOB
PRESET BARS
EX and LX-V6 models
NOISE REDUCTION INDICATOR
AM/FM BUTTON
RPT INDICATOR
TAPE DIRECTION INDICATOR
CD/AUX BUTTON
RPT BUTTON
SEEK/SKIP BAR
PWR/VOL KNOB
PRESET BARS

EX-L and EX-V6 models without Navigation System and Satellite Radio System

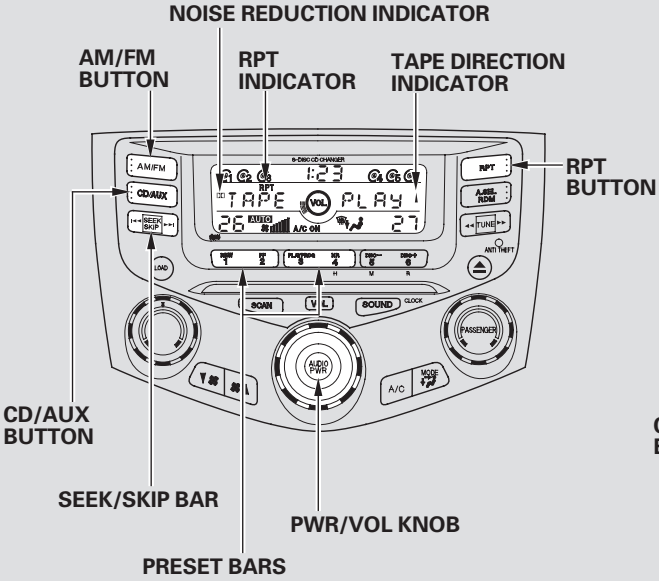

EX-L and EX-V6 models without Navigation System (U.S. Vehicles only)

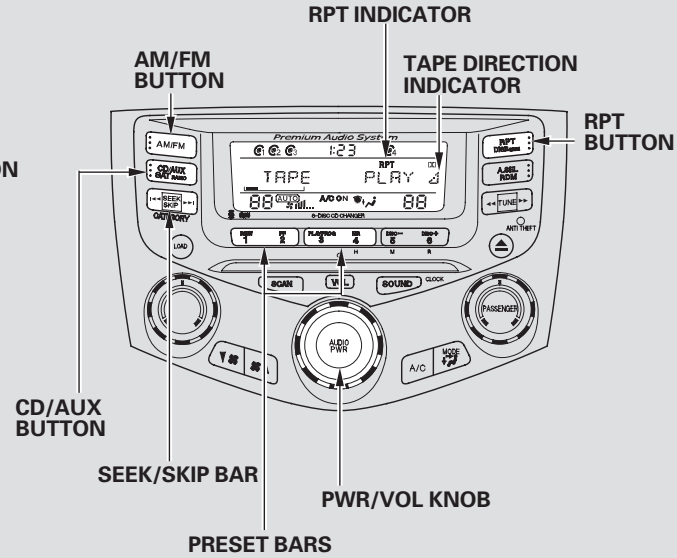

CONTINUED

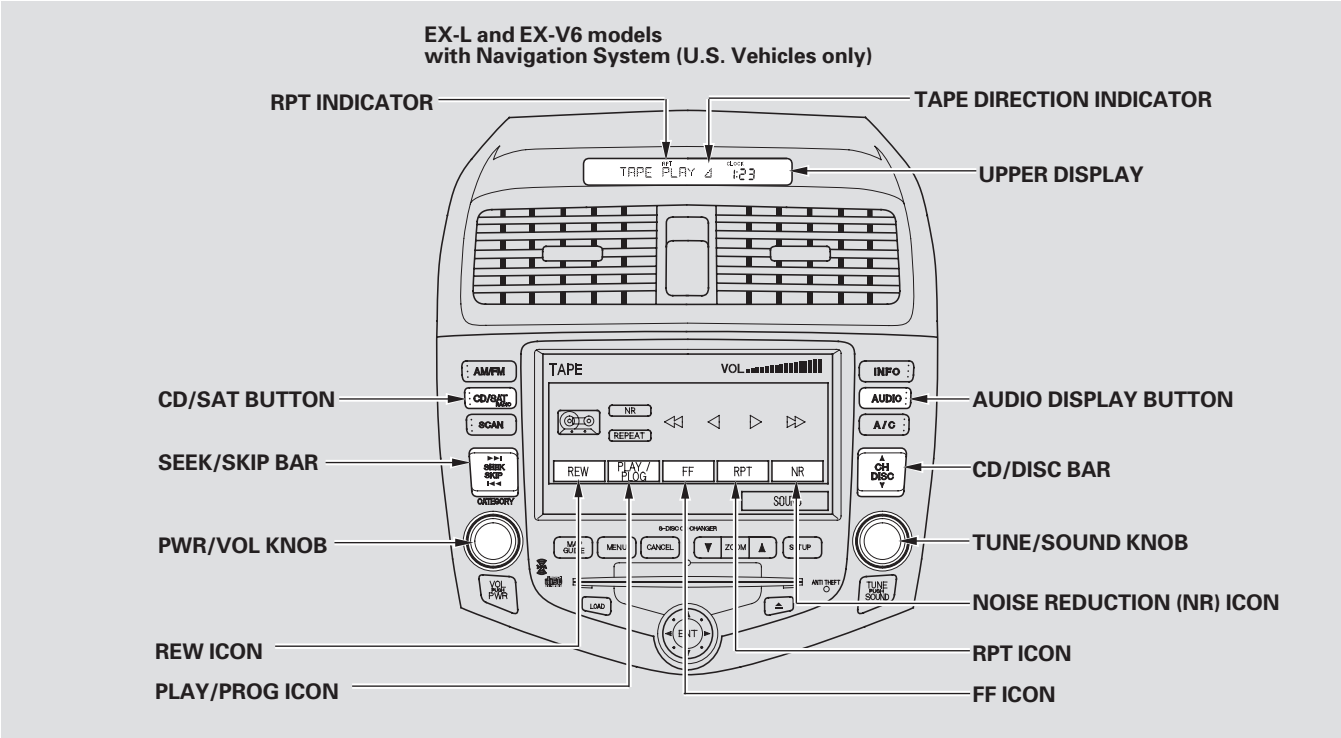
EX-L and EX-V6 models
with Navigation System (U.S. Vehicles only)
RPT INDICATOR
TAPE DIRECTION INDICATOR
UPPER DISPLAY
CD/SAT BUTTON
SEEK/SKIP BAR
PWR/VOL KNOB
REW ICON
PLAY/PROG ICON
AUDIO DISPLAY BUTTON
CD/DISC BAR
TUNE/SOUND KNOB
NOISE REDUCTION (NR) ICON
RPT ICON
FF ICON
TAPE PLAY 1:23
TAPE
VOL
NR
REPEAT
REW
PLAY/PROG
FF
RPT
NR
AM/FM
CD/SAT
SCAN
INFO
AUDIO
A/C
CH DISC
CATEGORY
MENU
CANCEL
SETUP
LOAD
ENT
ANTI THEFT
TUNE SOUND

To Play a Tape
Optional on all U.S. models
The ignition switch must be in ACCESSORY (I) or ON (II). Make sure the open side of the tape is facing right, then insert the tape most of the way into the slot. The system will pull the tape in the rest of the way, and begin to play it.

The tape direction indicator will light to show you which side of the tape is playing. The ▲ indicates the side you inserted upward is now playing. If you want to play the other side, press the Preset 3 (PLAY/PROG) side of the preset bar or touch the PLAY/PROG icon on vehicles with navigation system. When the player reaches the end of the tape, it will automatically reverse direction and play the other side.

On vehicles with navigation system, first push the AUDIO DISPLAY button before selecting any of the audio icons on the audio screen.

Dolby* noise reduction turns on when you insert a tape. The DD indicator will light in the display. If the tape was not recorded in Dolby, turn it off by pressing the Preset 4 (NR) side of the preset bar or touching the NR icon. Dolby remains off until you press the preset bar or the icon again.

* Dolby noise reduction manufactured under license from Dolby Laboratories Licensing Corporation. "DOLBY" and the double-D symbol DD are trademarks of Dolby Laboratories Licensing Corporation.

To Stop Playing a Tape
To remove the tape, press the EJECT button on the cassette player. If you want to turn the player off, press the PWR/VOL knob or turn off the ignition. The tape will remain in the drive. When you turn the system back on, the tape will be in pause mode. Press the Preset 3 (PLAY/PROG) side of the preset bar or touch the PLAY/PROG icon on vehicles navigation system.

To switch to the radio or CD player while a tape is playing, press the AM/FM or CD/AUX button (CD/SAT button on vehicles with navigation system). To change back to the tape player, push the CD/AUX or CD/SAT button.

Tape Search Functions

On vehicles without navigation system

FF/REW — To rewind the tape, push the Preset 1 (REW) side of the preset bar. You will see REW in the display. To fast forward the tape, push the Preset 2 (FF) side of the preset bar. You will see FF displayed. Press the Preset 1, 2, or 3 side of the bars to take the system out of rewind or fast forward.

On vehicles with navigation system

FF/REW — To fast forward the tape, push the upper side (▲) of the CH/DISC bar. You will see FF in the upper display. To rewind the tape, push the lower side (▼) of the CH/DISC bar. You will see REW displayed. Press either side of the CH/DISK bar or touch the FF, REW or PLAY/PROG icon to take the system out of rewind or fast forward.

SKIP — Press |◄◄ side to find the beginning of the current song or passage. Press ►►| side to find the beginning of the next song or passage. When the system reaches the beginning of a song or passage, it begins to play it.

REPEAT — Press the RPT button or touch the RPT icon to continuously play a song or passage. You will see RPT displayed (in the upper display on vehicles with navigation system). The track will repeat until you press the RPT button or touch the RPT icon again.

NOTE: The SKIP and REPEAT functions use silent periods on the tape to find the end of a song or passage. These features may not work if there is almost no gap between selections, a high noise level, or a silent period in the middle of a selection.

Caring for the Tape Player
The tape player picks up dirt and oxides from the tape. This contamination builds up over time and cause the sound quality to degrade. To prevent this, you should clean the player after every 30 hours of use.

If you do not clean the tape player regularly, it may eventually become impossible to remove the contamination with a normal cleaning kit. Your Honda dealer has a cleaning kit available.

Use 100-minute or shorter tapes. Tapes longer than that may break or jam the drive.

If the tape is loose, tighten it by turning the hub with a pencil or your finger. If the label is peeling off, remove it or it could cause the tape to jam in the player. Never try to insert a warped or damaged tape in the player.

Store tapes in their cases to protect them from dust and moisture. Never place tapes where they will be exposed to direct sunlight, high heat, or high humidity. If a tape is exposed to extreme heat or cold, let it reach a moderate temperature before inserting it into the player.

Never try to insert foreign object into the tape player.

If you see the error message "TAPE ERR" on the display (on the upper display on vehicles with navigation system), press the TAPE eject button to remove the tape from the unit. Make sure the tape is not damaged. If the tape will not eject or the error message stays on after the tape ejects, take the vehicle to your Honda dealer.

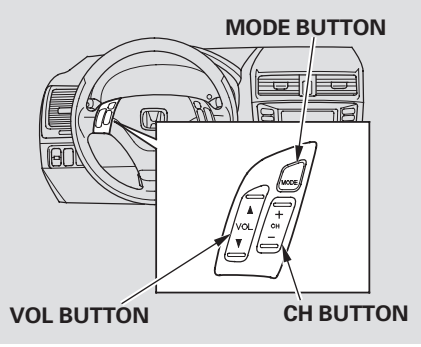

On all EX and V6 models
Three controls for the audio system are mounted in the steering wheel hub. These let you control basic functions without removing your hand from the wheel.

The VOL button adjusts the volume up (▲) or down (▼). Press the top or bottom of the button and hold it until the desired volume is reached, then release it.

The MODE button changes the mode. Pressing the button repeatedly selects FM1, FM2, AM, CD (if a CD is loaded), or a tape (if equipped). On vehicles with satellite radio system, you can also select XM 1 and XM2.

If you are listening to the radio, use the CH button to change stations. Each time you press the top (+) of the button, the system goes to the next preset station on the band you are listening to. Press the bottom (−) to go back to the previous station.

If you are playing a CD, the system skips to the beginning of the next track each time you press the top (+) of the CH button. Press the bottom (−) to return to the beginning of the current track. Press it twice to return to the previous track. You will see the disc and track number in the display.

If you are playing a tape in the optional cassette player, press the top (+) of the CH button to advance to the next selection. Press the bottom (−) to go back to the previous selection. The system senses a silent period, then resumes playing.

On EX, EX-V6 and LX-V6 models
Your vehicle's audio system will disable itself if it is disconnected from electrical power for any reason. To make it work again, you must enter a specific code using the preset bars or the TUNE knob. Because there are hundreds of number combinations possible, making the system work without knowing the exact code is nearly impossible.

You should have received a card that lists your audio system's code and serial numbers. It is best to store this card in a safe place at home. In addition, you should write the audio system's serial number in this Owner's Manual.

If you should happen to lose the card, you must obtain the code number from a Honda dealer. To do this, you will need the system's serial number.

If your vehicle's battery is disconnected or goes dead, or the radio fuse is removed, the audio system will disable itself. If this happens, you will see "CODE"/"CODE" in the frequency display the next time you turn on the system. Use the preset bars to enter the code. The code is located on the radio code card included in your Owner's Manual kit. When it is entered correctly, the radio will start playing.

If you make a mistake entering the code, do not start over; complete the sequence, then enter the correct code. You have ten tries to enter the correct code. If you are unsuccessful in ten attempts, you must then leave the system on for one hour before trying again.

You will have to store your favorite stations on each side of the preset bars (1 – 6) or icons after the system begins working. Your original settings were lost when the power was disconnected.

On Vehicles without Navigation System

If your vehicle's battery is disconnected or goes dead, you will need to set the clock.

To set the time, press the Clock Set button (SOUND) until you hear a beep. The displayed time begins to blink.

Press and hold the H (Preset 4) side of the bar until the hour advances to the desired time. Press and hold the M (Preset 5) side of the bar until the minutes advance to the desired time.

Press the Clock Set button (SOUND) again to enter the set time.

You can quickly set the time to the nearest hour. If the displayed time is before the half hour, pressing the Clock Set (SOUND) button until you hear a beep, then pressing the R (Preset 6) side of the bar sets the clock back to the previous hour. If the displayed time is after the half hour, the clock sets forward to the beginning of the next hour.

For example:
1:06 will reset to 1:00
1:53 will reset to 2:00

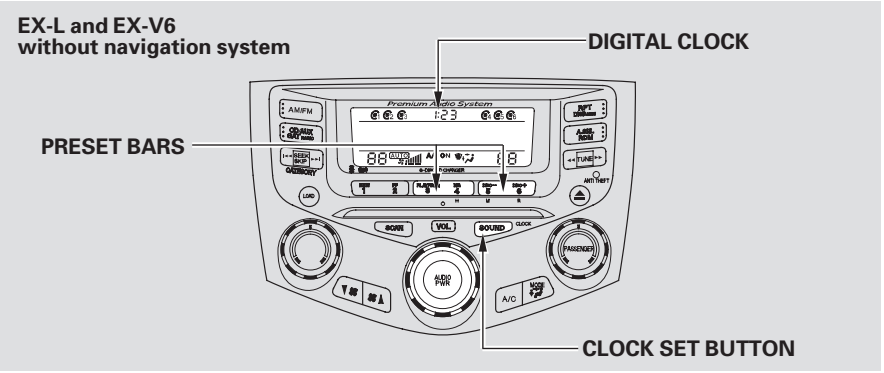

On Vehicles with Navigation System

The upper display shows the time when the ignition switch is in the ACCESSORY (I) or ON (II) position. The Navigation System receives signals from the Global Positioning System (GPS), and the displayed time is updated automatically by the GPS. Refer to the Navigation System Owner's Manual to set up the time.

On all models except for 4-cylinder LX model and all Canadian models
The security system helps to protect your vehicle and valuables from theft. The horn sounds and a combination of headlights, parking lights, side marker lights and taillights flashes if someone attempts to break into your vehicle or remove the radio. This alarm continues for two minutes, then the system resets. To reset an alarming system before the two minutes have elapsed, unlock the driver's door with the key or the remote transmitter.

The security system automatically sets 15 seconds after you lock the doors, hood, and trunk. For the system to activate, you must lock the doors from the outside with the key, lock tab, door lock switch, or remote transmitter. The security system indicator on the instrument panel starts blinking immediately to show you the system is setting itself.

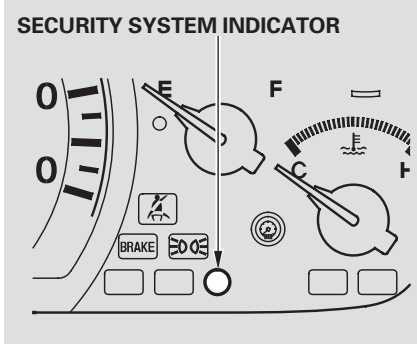

Once the security system is set, opening either door without using the key or the remote transmitter, the hood, or the trunk will cause it to sound. It also sounds if the radio is removed from the dashboard or the wiring is cut.

With the system set, you can still open the trunk with the remote transmitter without triggering the alarm. The alarm will sound if the trunk lock is forced, or the trunk is opened with the trunk release handle or the emergency trunk opener.

The security system will not set if the hood, trunk, or either door is not fully closed. If the system will not set, check the Door and Trunk Open Monitor on the instrument panel (see page 61), to see if the doors and the trunk are fully closed. Since it is not part of the monitor display, manually check the hood.

Do not attempt to alter this system or add other devices to it.

Cruise Control

Cruise control allows you to maintain a set speed above 25 mph (40 km/h) without keeping your foot on the accelerator pedal. It should be used for cruising on straight, open highways. It is not recommended for city driving, winding roads, slippery roads, heavy rain, or bad weather.

⚠ WARNING

Improper use of the cruise control can lead to a crash.

Use the cruise control only when traveling on open highways in good weather.

Using the Cruise Control

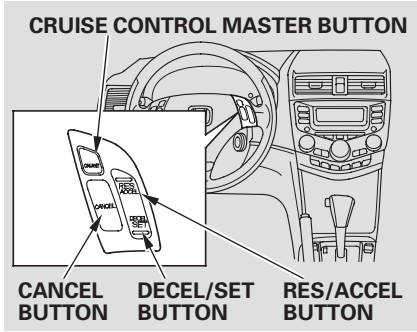

1. Push in the Cruise Control Master Button on the steering wheel. The CRUISE MAIN indicator on the instrument panel will come on.

2. Accelerate to the desired cruising speed above 25 mph (40 km/h).

3. Press and release the DECEL/SET button on the steering wheel. The CRUISE CONTROL indicator on the instrument panel comes on to show the system is now activated.

The cruise control may not hold the set speed when you are going up and down hills. If your speed increases going down a hill, use the brakes to slow down. This will cancel the cruise control. To resume the set speed, press the RESUME/ACCEL button. The CRUISE CONTROL indicator on the instrument panel will come back on.

When climbing a steep hill, the automatic transmission may downshift to hold the set speed.

Changing the Set Speed
You can increase the set cruising speed in any of these ways:

- Press and hold the RES/ACCEL button. When you reach the desired cruising speed, release the button.
- Push on the accelerator pedal until you reach the desired cruising speed, then press the DECEL/SET button.
- To increase your speed in very small amounts, tap the RES/ACCEL button. Each time you do this, the vehicle will speed up about 1 mph (1.6 km/h).

You can decrease the set cruising speed in any of these ways:

- Press and hold the DECEL/SET button. Release the button when you reach the desired speed.
- To slow down in very small amounts, tap the DECEL/SET button repeatedly. Each time you do this, your vehicle will slow down about 1 mph (1.6 km/h).
- Tap the brake or clutch pedal lightly with your foot. The CRUISE CONTROL indicator on the instrument panel will go out. When the vehicle slows to the desired speed, press the DECEL/SET button.

Even with the cruise control turned on, you can still use the accelerator pedal to speed up for passing. After completing the pass, take your foot off the accelerator pedal. The vehicle will return to the set cruising speed.

Resting your foot on the brake or clutch pedal will cause the cruise control to cancel.

Cancelling the Cruise Control

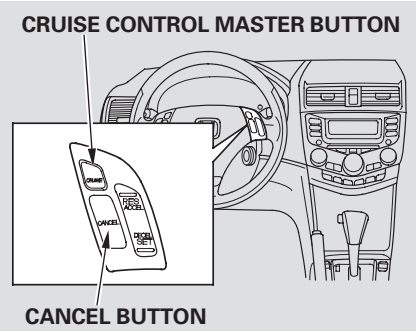

You can cancel the cruise control in any of these ways:

- Tap the brake or clutch pedal.
- Push the CANCEL button on the steering wheel.
- Press the Cruise Control Master button on the steering wheel.

Resuming the Set Speed

When you push the CANCEL button, or tap the brake or clutch pedal, the system will remember the previously set cruising speed. To return to that speed, accelerate to above 25 mph (40 km/h), then press and release the RES/ACCEL button. The CRUISE CONTROL indicator comes on, and the vehicle will accelerate to the same cruising speed as before.

Pressing the Cruise Control Master button turns the system completely off and erases the previous cruising speed.

On EX-V6 model
The HomeLink® Universal Transceiver built into your vehicle can be programmed to operate up to three remote controlled devices around your home, such as garage doors, lighting, or home security systems.

General Information
If you are training HomeLink to operate a garage door or gate, you should unplug the motor for that device during training. Repeatedly pressing the remote control button could burn out the motor.

The HomeLink transceiver stores the code in a permanent memory. There should be no need to retrain the transmitter if your vehicle's battery goes dead or is disconnected. If your garage door opener was manufactured before April 1982, you may not be able to program HomeLink to operate it.

They do not have the safety feature that causes the motor to stop and reverse if an obstacle is detected during closing, increasing the risk of injury.

HomeLink® is a registered trademark of Johnson Controls™.

Important Safety Precautions
Always refer to the operating instructions and safety information that came with your garage door opener or other equipment you intend to operate with the HomeLink Universal Transceiver. If you do not have this information, you should contact the manufacturer of the equipment.

For quick and accurate training, make sure the remote control transmitter for the device (garage door, automatic gate, security system, etc.) has a fresh battery.

Training HomeLink
Before you begin — If you just received your vehicle and have not trained any of the buttons in HomeLink before, you should erase any previously learned codes before training the first button.

To do this, press and hold the two outside buttons on the HomeLink transceiver for about 20 seconds, or until the red light flashes. Release the buttons, then proceed to Step 1.

If you are training the second or third buttons, go directly to Step 1.

CONTINUED

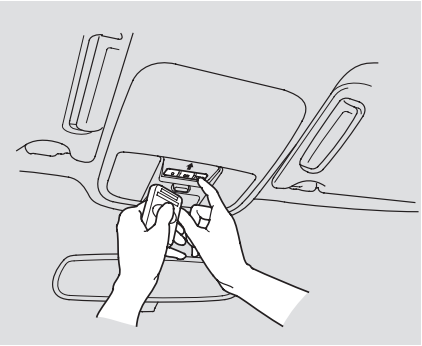

1. Unplug the garage door opener motor from the house current.

2. Hold the end of the garage door opener remote control 2 to 5 inches from the HomeLink transceiver. Make sure you are not blocking your view of the red light in HomeLink.

3. Press and hold the remote control button and one of the HomeLink buttons at the same time.

Canadian Owners: The remote control you are training from may stop transmitting after two seconds. This is not enough for HomeLink to learn the code. Release and press the button on the remote control every two seconds until HomeLink has learned the code.

4. The red light in HomeLink should begin flashing. It will flash slowly at first, then rapidly.

5. When the red light flashes rapidly, release both buttons. HomeLink should have learned the code from the remote control.

6. Plug in the garage door opener motor, then test the HomeLink transceiver button by pushing it. If the button does not work, repeat the procedure to train it again. If it still does not work, you may have a variable or rolling code garage door opener. See if you do by pressing and holding the HomeLink transceiver button you just trained. If the red light blinks for two seconds then stays on, you have a rolling code garage door opener. Go to "Training with a Rolling Code System" (see page 161)

7. Repeat these steps to train the other two HomeLink buttons to operate any other remotely controlled devices around your home (lighting, automatic gate, security system, etc.).

Training With a Rolling Code System

For security purposes, newer garage door opening systems use a “rolling” or variable code. Information from the remote control and the garage door opener are needed before HomeLink can operate the garage door opener.

The “Training HomeLink” procedure trains HomeLink to the proper garage door opener code. The following procedure synchronizes HomeLink to the garage door opener so they send and receive the correct codes.

1. Make sure you have properly completed the “Training HomeLink” procedure.

2. Find the “Training” button on your garage door opener unit. The location will vary, depending on the manufacturer.

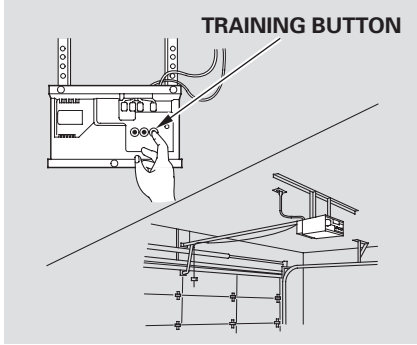

3. Press the Training button on the garage door opener unit until the light next to the button comes on, then release it. The light may blink, or come on and stay on. You then have approximately 30 seconds to complete the following steps.

4. Press and hold the button on HomeLink for 3 — 4 seconds.

5. Press and hold the HomeLink button again for 3 — 4 seconds. This should turn off the training light on the garage door opener unit. (Some systems may require you to press the button up to three times.)

6. Press the HomeLink button again. It should operate the garage door.

Erasing Codes
To erase the codes stored in all three buttons, press and hold the two outside buttons until the red light begins to flash, then release the buttons.

You should erase all three codes before selling the vehicle.

Retraining a Button
To train an already programmed transceiver button with a new device, you do not have to erase all the memory. Train the selected button over the existing memory code following the steps under **Training HomeLink**.

Customer Assistance
If you have problems with training the HomeLink Universal Transceiver, or would like information on home products that can be operated by the transmitter, call (800) 355-3515. On the Internet, go to www.homelink.com.

As required by the FCC:
This device complies with Part 15 of the FCC rules. Operation is subject to the following two conditions: (1) This device may not cause harmful interference, and (2) this device must accept any interference received, including interference that may cause undesired operation.

Changes or modifications not expressly approved by the party responsible for compliance could void the user's authority to operate the equipment.

This device complies with Industry Canada Standard RSS-210.
Operation is subject to the following two conditions: (1) this device may not cause interference, and (2) this device must accept any interference that may cause undesired operation of the device.

Before you begin driving your Honda, you should know what gasoline to use, and how to check the levels of important fluids. You also need to know how to properly store luggage or packages. The information in this section will help you. If you plan to add any accessories to your vehicle, please read the information in this section first.

Break-in Period 164
Gasoline Type 164
Service Station Procedures 165
Fuel Economy 170
Accessories and Modifications 171
Carrying Cargo 173

Break-in Period

Help assure your vehicle's future reliability and performance by paying extra attention to how you drive during the first 600 miles (1,000 km). During this period:

- Avoid full-throttle starts and rapid acceleration.
- Avoid hard braking for the first 200 miles (300 km).
- Do not change the oil until the scheduled maintenance time.

You should also follow these recommendations with an overhauled or exchanged engine, or when the brakes are replaced.

We also recommend that you should not tow a trailer during the first 500 miles (800 km).

Gasoline Type

Your Honda is designed to operate on unleaded gasoline with a pump octane number of 86 or higher. Use of a lower octane gasoline can cause occasional metallic knocking noises in the engine and will result in decreased engine performance.

On EX-V6 with manual transmission

If you drive with the low engine speed (below than about 1,000 rpm), you may feel the engine knocking. In this case, you can use premium unleaded gasoline with a pump octane number of 91 or higher to prevent the engine from knocking.

We recommend gasolines containing detergent additives that help prevent fuel system and engine deposits.

In addition, in order to maintain good performance, fuel economy, and emissions control, we strongly recommend, in areas where it is available, the use of gasoline that does NOT contain manganese-based fuel additives such as MMT.

Use of gasoline with these additives may adversely affect performance, and cause the Malfunction Indicator Lamp on your instrument panel to come on. If this happens, contact your authorized Honda dealer for service.

Some gasoline today is blended with oxygenates such as ethanol or MTBE. Your vehicle is designed to operate on oxygenated gasoline containing up to 10 percent ethanol by volume and up to 15 percent MTBE by volume. Do not use gasoline containing methanol.

If you notice any undesirable operating symptoms, try another service station or switch to another brand of gasoline.

For further important fuel-related information, please refer to your **Quick Start Guide**.

Refueling

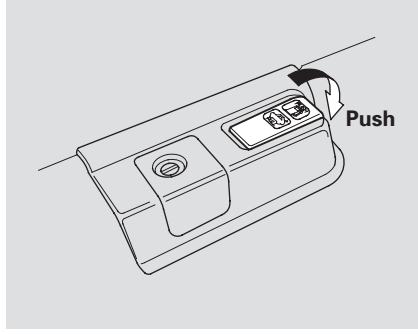

1. Park with the driver's side closest to the service station pump.

2. Open the fuel fill door by pushing on the handle to the left of the driver's seat.

⚠WARNING

Gasoline is highly flammable and explosive. You can be burned or seriously injured when handling fuel.

- Stop the engine and keep heat, sparks, and flames away.
- Handle fuel only outdoors.
- Wipe up spills immediately.

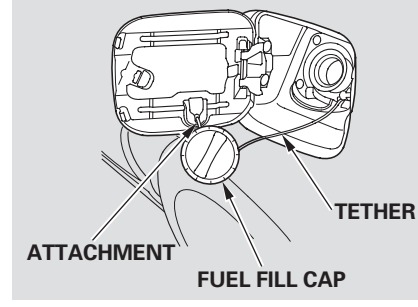

CONTINUED

3. Remove the fuel fill cap slowly. You may hear a hissing sound as pressure inside the tank escapes. The fuel fill cap is attached to the fuel filler with a tether. Put the attachment on the fuel fill cap into the slit on the fuel fill door.

4. Stop filling the tank after the fuel nozzle automatically clicks off. Do not try to “top off” the tank. Leave some room for the fuel to expand with temperature changes.

   If the fuel nozzle keeps clicking off even though the tank is not full, there may be a problem with your vehicle’s fuel vapor recovery system. The system helps keep fuel vapors from going into the atmosphere. Consult your dealer.

5. Screw the fuel fill cap back on until it clicks at least three times. If you do not properly tighten the cap, the Malfunction Indicator Lamp may come on (see page 269).

6. Push the fuel fill door closed until it latches.

Opening the Hood

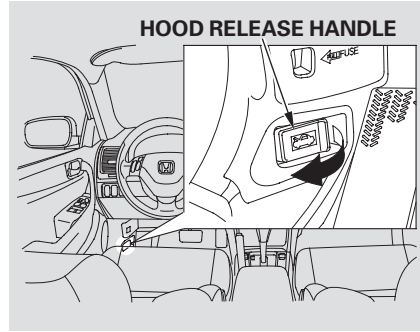

1. Park the vehicle, and set the parking brake. Pull the hood release handle located under the lower left corner of the dashboard. The hood will pop up slightly.

2. Reach in between the hood and the front grille with your finger. The hood latch handle is above and to the left of the “H” logo. Push this handle up until it releases the hood. Lift the hood.

   If the hood latch handle moves stiffly, or if you can open the hood without lifting the handle, the mechanism should be cleaned and lubricated (see page 232).

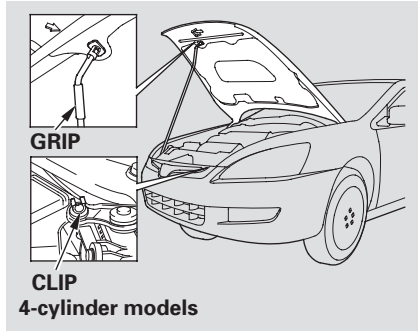

4-cylinder models

3. *4-cylinder models*
   Pull the support rod out of its clip by holding the grip and insert the end into the hole on the front of the hood around the center.
   To Close the Hood:
   Lift it up slightly to remove the support rod from the hole. Put the support rod back into its holding clip. Lower the hood to about a foot (30 cm) above the fender, then let it drop. Make sure it is securely latched.

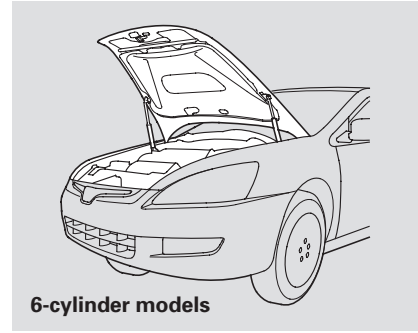
6-cylinder models

   6-cylinder models
   Lift the hood up most of the way. The hydraulic supports will lift it up the rest of the way and hold it up.

To Close the Hood:
Lower the hood to about a foot (30 cm) above the fender, then press down firmly with your hands. Make sure it is securely latched.

Oil Check

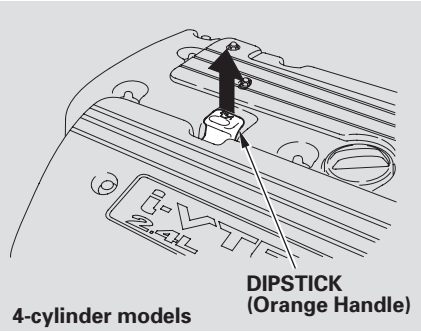

Wait a few minutes after turning the engine off before you check the oil.

1. Remove the dipstick (orange handle/loop).

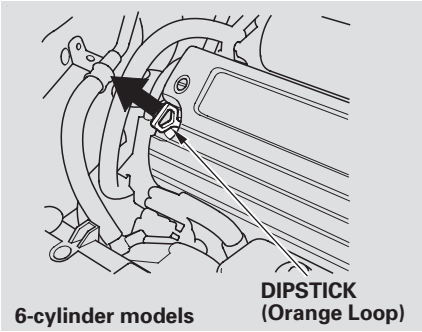

2. Wipe off the dipstick with a clean cloth or paper towel.

3. Insert it all the way back in its hole.

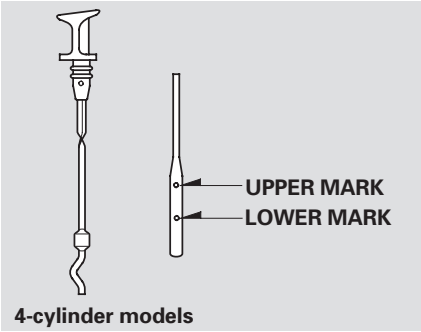

4. Remove the dipstick again and check the level. It should be between the upper and lower marks.

If it is near or below the lower mark, see **Adding Oil** on page 217 .

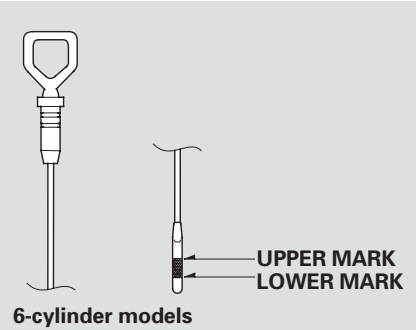

Engine Coolant Check

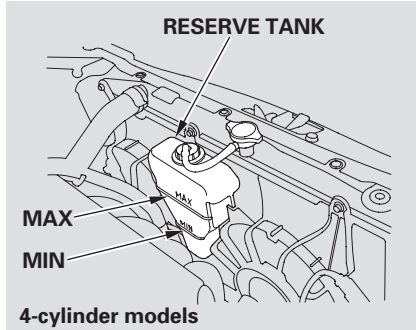

Look at the coolant level in the radiator reserve tank. Make sure it is between the MAX and MIN lines. If it is below the MIN line, see **Adding Engine Coolant** on page 221 for information on adding the proper coolant.

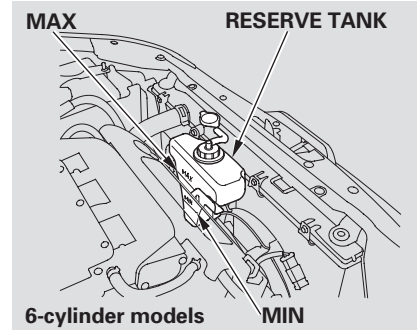

Refer to **Owner's Maintenance Checks** on page 204 for information on checking other items in your Honda.

Improving Fuel Economy

- Always maintain your vehicle according to the maintenance schedule. See **Owner's Maintenance Checks** (see page 204).

  For example, an underinflated tire causes more "rolling resistance," which uses fuel.

  The build-up of snow or mud on your vehicle's underside adds weight and rolling resistance. Frequent cleaning helps your fuel mileage and reduces the chance of corrosion.

- Drive moderately. Rapid acceleration, abrupt cornering and hard braking use more fuel.

- Always drive in the highest gear possible.

- Try to maintain a constant speed. Every time you slow down and speed up, your vehicle uses extra fuel. Use the cruise control when appropriate.

- Combine several short trips into one.

- The air conditioning puts an extra load on the engine which makes it use more fuel. Use the fresh-air ventilation when possible.

Modifying your vehicle, or installing some non-Honda accessories, can make your vehicle unsafe. Before you make any modifications or add any accessories, be sure to read the following information.

Accessories
Your dealer has Honda accessories that allow you to personalize your vehicle. These accessories have been designed and approved for your vehicle, and are covered by warranty.

Although aftermarket accessories may fit on your vehicle, they may not meet factory specifications, and could adversely affect your vehicle's handling and stability. (See "Modifications" on page 172 for additional information.)

⚠ WARNING

Improper accessories or modifications can affect your vehicle's handling, stability, and performance, and cause a crash in which you can be hurt or killed.

Follow all instructions in this owner's manual regarding accessories and modifications.

When properly installed, cellular phones, alarms, two-way radios, and low-powered audio systems should not interfere with your vehicle's computer controlled systems, such as the SRS and anti-lock brake system.

Before installing any accessory:

- Make sure the accessory does not obscure any lights, or interfere with proper vehicle operation or performance.
- Be sure electronic accessories do not overload electrical circuits (see page 275) or interfere with proper operation.
- Have the installer contact your Honda dealer for assistance before installing any electronic accessory.

Modifying Your Vehicle
Removing parts from your vehicle, or replacing components with non-Honda (aftermarket) components could seriously affect your vehicle's handling, stability, and reliability.

Some examples are:
- Lowering the vehicle with an aftermarket suspension kit that significantly reduces ground clearance can allow the undercarriage to hit speed bumps or other raised objects, which could cause the airbags to deploy.
- Raising your vehicle with an aftermarket suspension kit can affect the handling and stability.
- Aftermarket wheels, because they are a universal design, can cause excessive stress on suspension components.
- Larger or smaller wheels and tires can interfere with the operation of your vehicle's anti-lock brakes and other systems.

Do not modify your steering wheel or any other part of your Supplemental Restraint System. Modifications could make the system ineffective. See the safety precautions on page 31 .

If you plan to modify your vehicle, consult with your Honda dealer.

Additional Safety Precaution
Do not cover or replace front seat-back covers without consulting a Honda dealer. Improperly replacing or covering front seat-back covers can prevent your side airbags from inflating during a side impact.

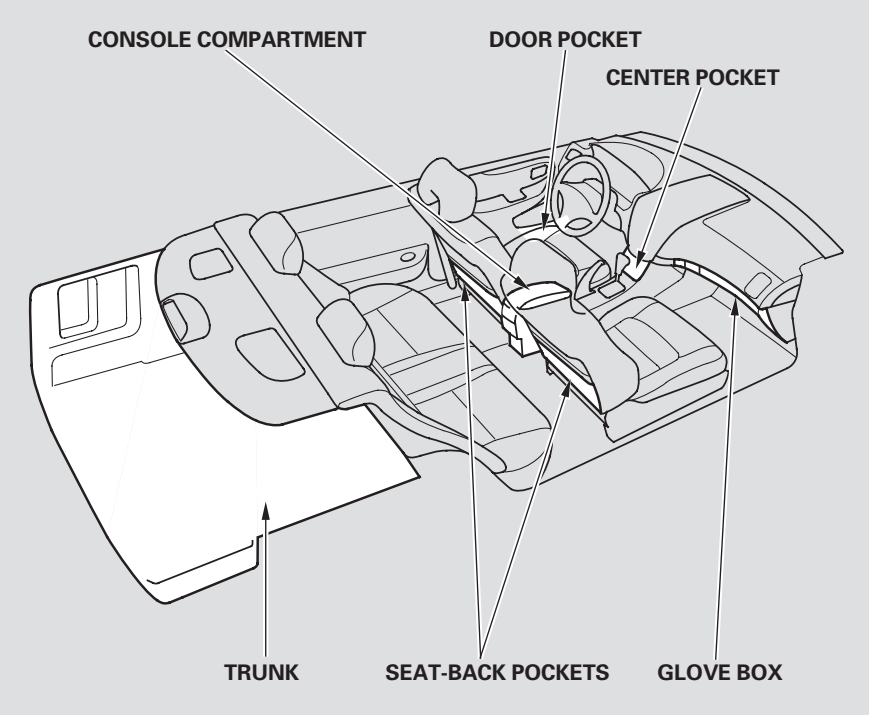

Your vehicle has several convenient storage areas:

- Glove box
- Door and seat-back pockets
- Trunk, including the rear seats when folded down
- Center pocket
- Console compartment
- Roof-rack (if installed)

However, carrying too much cargo, or improperly storing it, can affect your vehicle's handling, stability, stopping distance, and tires, and make it unsafe. Before carrying any type of cargo, be sure to read the following pages.

CONTINUED

The maximum load limit for your vehicle is 850 lbs (395 kg). This figure includes total weight of all occupants, cargo, accessories, and the tongue weight if you are towing a trailer.

To determine the correct cargo and luggage load limit:

1. Locate the statement, "the combined weight of occupants and cargo should never exceed 850 lbs (395 kg)" on your vehicle's placard (on the driver's doorjamb).

2. Determine the combined weight of the driver and passengers that will be riding in your vehicle. (Five is the seating capacity of your vehicle.)

3. Subtract the combined weight of the driver and passengers from 850 lbs (395 kg).

4. The resulting figure equals the available amount of cargo and luggage load capacity.

For example, if there will be four 150 lbs (70 kg) occupants in your vehicle, the amount of available cargo and luggage load capacity is 250 lbs (115 kg).
4 × 150 lbs (70 kg) = 600 lbs (280 kg)
850 lbs (395 kg) − 600 lbs (280 kg) = 250 lbs (115 kg)

5. Determine the combined weight of accessories, luggage, and cargo being loaded in the vehicle. The weight may not safely exceed the available cargo and luggage load capacity calculated in step 4 [250 lbs (115 kg) in this example].

6. If your vehicle will be towing a trailer, the load from your trailer will be transferred to your vehicle. Consult this manual to determine how this reduces the available cargo and luggage load capacity of your vehicle.

The total weight must not exceed the Gross Vehicle Weight Rating (GVWR). The load for the front and rear axles also must not exceed the Gross Axle Weight Rating (GAWR) (see page 284).

⚠ WARNING

Overloading or improper loading can affect handling and stability and cause a crash in which you can be hurt or killed.

Follow all load limits and other loading guidelines in this manual.

Carrying Items in the Passenger Compartment

- Store or secure all items that could be thrown around and hurt someone during a crash.
- Do not put any items on top of the rear shelf. They can block your view and be thrown around the vehicle during a crash.
- Be sure items placed on the floor behind the front seats cannot roll under the seats and interfere with the pedals or seat operation.
- Keep the glove box closed while driving. If it is open, a passenger could injure their knees during a crash or sudden stop.

Carrying Cargo in the Trunk or on a Roof Rack

- Distribute cargo evenly on the floor of the trunk, placing the heaviest items on the bottom and as far forward as possible.
- If you fold down the back seat, tie down items that could be thrown about the vehicle during a crash or sudden stop.
- If you carry large items that prevent you from closing the trunk lid, exhaust gas can enter the passenger area. To avoid the possibility of **carbon monoxide poisoning**, follow the instructions on page 51 .
- If you can carry any items on a roof rack, be sure the total weight of the rack and the items does not exceed the maximum allowable weight. Please contact your Honda dealer for further information.

Trunk Hooks

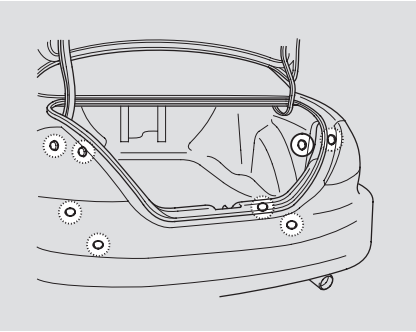

There are hooks on the floor and sides of the trunk. They can be used to install a net for securing items.

Cargo Net

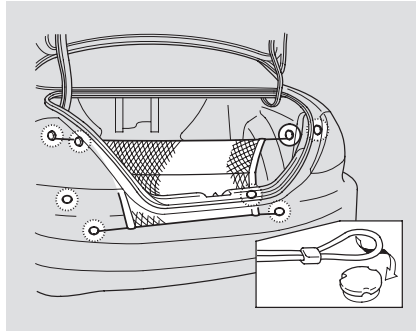

On all EX and EX-V6 models
The cargo net can be used to help hold down items stored in the trunk. To use the cargo net, hook it to the buttons on the floor and sides of the trunk. You can use the cargo net in several configurations by hooking it to different buttons.

When you are not using the cargo net, store it in the spare tire well.

This section gives you tips on starting the engine under various conditions, and how to operate the 5-speed/6-speed manual and automatic transmissions. It also includes important information on parking your vehicle, the braking system, the Traction Control System, and facts you need if you are planning to tow a trailer.

Preparing to Drive 178
Starting the Engine..... 179
5-speed/6-speed Manual Transmission..... 180
Automatic Transmission..... 183
Parking Tips 187
Braking System..... 188
Anti-lock Brakes (ABS) 189
Traction Control System (TCS)... 191
Towing a Trailer 194

Preparing to Drive

You should do the following checks and adjustments before you drive your vehicle.

1. Make sure all windows, mirrors, and outside lights are clean and unobstructed. Remove frost, snow, or ice.

2. Check that the hood is fully closed.

3. Visually check the tires. If a tire looks low, use a gauge to check its pressure.

4. Check that any items you may be carrying are stored properly or fastened down securely.

5. Check the seat adjustment (see page 83).

6. Check the adjustment of the inside and outside mirrors (see page 95).

7. Check the steering wheel adjustment (see page 74).

8. Make sure the doors and the trunk are securely closed and locked.

9. Fasten your seat belt. Check that your passengers have fastened their seat belts (see page 14).

10. When you start the engine, check the gauges and indicators in the instrument panel (see page 58).

1. Apply the parking brake.

2. In cold weather, turn off all electrical accessories to reduce the drain on the battery.

3. *Manual Transmission:*
   Push the clutch pedal down all the way. START (III) does not function unless the clutch pedal is pressed.

   Automatic Transmission:
   Make sure the shift lever is in Park. Press on the brake pedal.

4. Without touching the accelerator pedal, turn the ignition key to the START (III) position. Do not hold the key in START for more than 15 seconds at a time. If the engine does not start right away, pause for at least 10 seconds before trying again.

5. If the engine does not start within 15 seconds, or starts but stalls right away, repeat step 4 with the accelerator pedal pressed halfway down. If the engine starts, release pressure on the accelerator pedal so the engine does not race.

6. If the engine fails to start, press the accelerator pedal all the way down and hold it there while starting to clear flooding. If the engine still does not start, return to step 5.

NOTICE: *The engine is harder to start in cold weather. Also, the thinner air found at altitudes above 8,000 feet (2,400 meters) adds to this problem.*

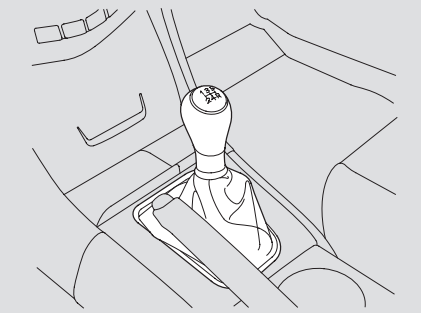

5-speed M/T

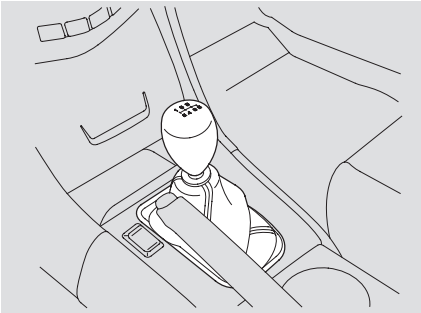

6-speed M/T

On all 4-cylinder models with 5-speed manual transmission
On EX-V6 model with 6-speed manual transmission
The manual transmission is synchronized in all forward gears for smooth operation. It has a lockout so you cannot shift directly from Fifth to Reverse.

On vehicles with 6-speed manual transmission, the lockout system prevents you from shifting directly from Fifth to Reverse instead of Sixth (see page 182).

When shifting up or down, make sure you push the clutch pedal down all the way, shift to the next gear, and let the pedal up gradually. When you are not shifting, do not rest your foot on the clutch pedal. This can cause your clutch to wear out faster.

Come to a full stop before you shift into Reverse. You can damage the transmission by trying to shift into Reverse with the vehicle moving. Push down the clutch pedal, and pause for a few seconds before shifting into Reverse, or shift into one of the forward gears for a moment. This stops the gears so they won't "grind."

When slowing down, you can get extra braking from the engine by shifting to a lower gear. This extra braking can help you maintain a safe speed and prevent your brakes from overheating while going down a steep hill. Before downshifting, make sure engine speed will not go into the tachometer's red zone in the lower gear.

⚠ WARNING

Rapid slowing or speeding-up can cause loss of control on slippery surfaces. If you crash, you can be injured.

Use extra care when driving on slippery surfaces.

On EX-V6 model
Your vehicle is equipped with an aluminum shift lever. If you leave the vehicle parked outside for a long time on a hot day, be careful before moving the shift lever. Because of the heat, the shift lever may be extremely hot. If the outside temperature is low, the shift lever feels cold.

Recommended Shift Points
Drive in the highest gear that lets the engine run and accelerate smoothly. This will give you the best fuel economy and effective emissions control. The following shift points are recommended:

With 5-speed manual transmission

Shift up	Normal acceleration
1st to 2nd	15 mph (25 km/h)
2nd to 3rd	25 mph (40 km/h)
3rd to 4th	40 mph (65 km/h)
4th to 5th	50 mph (80 km/h)

With 6-speed manual transmission

Shift up	Normal acceleration
1st to 2nd	15 mph (24 km/h)
2nd to 3rd	25 mph (40 km/h)
3rd to 4th	40 mph (64 km/h)
4th to 5th	47 mph (75 km/h)
5th to 6th	52 mph (83 km/h)

Engine Speed Limiter
If you exceed the maximum speed for the gear you are in, the engine speed will enter into the tachometer's red zone. If this occurs, you may feel the engine cut in and out. This is caused by a limiter in the engine's computer controls. The engine will run normally when you reduce the RPM below the red zone.

Before downshifting, make sure the engine will not go into the tachometer's red zone.

Reverse Lockout
6-speed manual transmission only
The 6-speed manual transmission has an electric lockout so you cannot accidentally shift from Fifth to Reverse instead of Sixth while the vehicle is moving. If you cannot shift to Reverse when the vehicle is stopped:

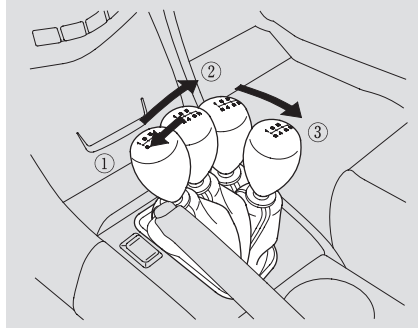

1. With the clutch pedal pressed, move the shift lever to the First/Second gear side of the Neutral gate, then shift to Reverse.
2. If you are still unable to shift to Reverse, apply the parking brake and turn the ignition key to ACCESSORY (I) or LOCK (0).
3. Depress the clutch pedal and shift to Reverse.
4. With the clutch pedal still pressed, start the engine.

If you need to use this procedure to shift to Reverse, your vehicle may be developing a problem. Have your vehicle checked by a Honda dealer.

Shift Lever Position Indicators

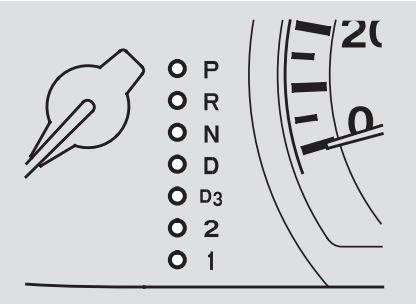

These indicators between the tachometer and speedometer show which position the shift lever is in.

The “D” indicator comes on for a few seconds when you turn the ignition switch to ON (II). If it flashes while driving (in any shift position), it indicates a possible problem in the transmission.

If the malfunction indicator lamp comes on along with the “D” indicator, there is a problem in the automatic transmission control system. Avoid rapid acceleration and have the transmission checked by a Honda dealer as soon as possible.

Shifting

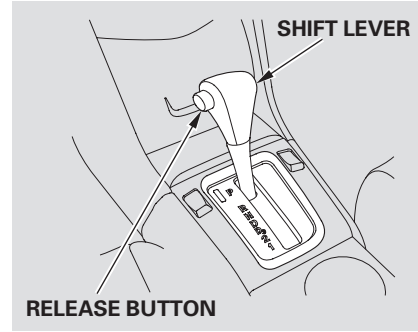

To shift from any position, press firmly on the brake pedal and press the release button on the side of the shift lever. You cannot shift out of Park when the ignition switch is in LOCK (0) or ACCESSORY (I).

CONTINUED

To shift from:	Do this:
P to R	Press the brake pedal and press the release button.
R to P N to R D_3 to 2 2 to 1	Press the release button.
1 to 2 2 to D_3 D_3 to D D to N D to D_3 N to D R to N	Move the lever.

Park (P) — This position mechanically locks the transmission. Use Park whenever you are turning off or starting the engine. To shift out of Park, you must press on the brake pedal and have your foot off the accelerator pedal. Press the release button on the side of the shift lever to move it.

If you have done all of the above and still cannot move the lever out of Park, see **Shift Lock Release** on page 186 .

You must also press the release button to shift into Park. To avoid transmission damage, come to a complete stop before shifting into Park. The shift lever must be in Park before you can remove the key from the ignition switch.

Reverse (R) — Press the brake pedal and press the release button on the side of the shift lever to shift from Park to Reverse. To shift from Reverse to Neutral, come to a complete stop and then shift. Press the release button before shifting into Reverse from Neutral.

Neutral (N) — Use Neutral if you need to restart a stalled engine, or if it is necessary to stop briefly with the engine idling. Shift to the Park position if you need to leave your vehicle for any reason. Press on the brake pedal when you are moving the shift lever from Neutral to another gear.

Drive (D) — Use this position for normal driving. The transmission automatically selects a suitable gear (1 through 5) for speed and acceleration. You may notice the transmission shifting up at higher speeds when the engine is cold. This helps the engine warm up faster.

Drive (D3) —This position is similar to D, except only the first three gears are selected instead of all five. Use D3 when towing a trailer in hilly terrain, or to provide engine braking when going down a steep hill. D3 can also keep the transmission from cycling between third and fourth gears in stop-and-go driving.

Second (2) — To shift to Second, press the release button on the side of the shift lever. This position locks the transmission in second gear. It does not downshift to first gear when you come to a stop.

Use Second gear:
- For more power when climbing.
- To increase engine braking when going down steep hills.
- For starting out on a slippery surface or in deep snow.
- When driving downhill with a trailer.

First (1) — To shift from Second to First, press the release button on the side of the shift lever. With the lever in this position, the transmission locks in First gear. By upshifting and downshifting through 1, 2, D3, and D, you can operate the transmission much like a manual transmission without a clutch pedal.

Engine Speed Limiter
If you exceed the maximum speed for the gear you are in, the engine speed will enter into the tachometer's red zone. If this occurs, you may feel the engine cut in and out. This is caused by a limiter in the engine's computer controls. The engine will run normally when you reduce the RPM below the red zone.

Shift Lock Release
This allows you to move the shift lever out of Park if the normal method of pushing on the brake pedal and pressing the release button does not work.

1. Set the Parking brake.

2. Remove the key from the ignition switch.

3. Put a cloth on the edge of the Shift Lock Release slot cover. Using a small flat-tipped screwdriver or small metal plate, carefully pry on the edge of the cover to remove it.

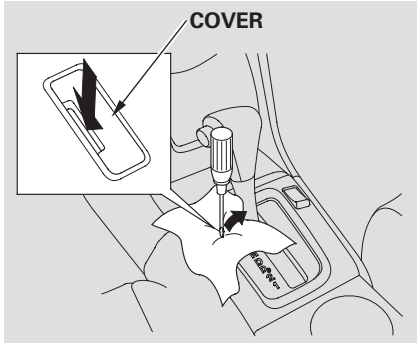

4. Insert the key in the Shift Lock Release slot.

5. Push down on the key while you press the release button on the shift lever and move the shift lever out of Park to Neutral.

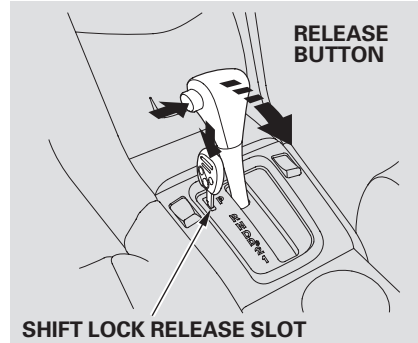

6. Remove the key from the Shift Lock Release slot, then reinstall the cover. Make sure the notch on the cover is on the left side. Press the brake pedal, and restart the engine.

If you need to use the Shift Lock Release, it means your vehicle is developing a problem. Have the vehicle checked by a Honda dealer.

Always use the parking brake when you park your vehicle. Make sure the parking brake is set firmly or your vehicle may roll if it is parked on an incline.

If your vehicle has an automatic transmission, set the parking brake before you put the transmission in Park. This keeps the vehicle from moving and putting pressure on the parking mechanism in the transmission.

Parking Tips

- Make sure the moonroof (if equipped) and the windows are closed.
- Turn off the lights.
- Place any packages, valuables, etc. in the trunk or take them with you.
- Lock the doors with the key or the remote transmitter.

  On vehicles with security system
  Check the indicator on the instrument panel to verify that the security system is set.
- Never park over dry leaves, tall grass, or other flammable materials. The hot three way catalytic converter could cause these materials to catch on fire.
- If the vehicle is facing uphill, turn the front wheels away from the curb. If you have a manual transmission, put it in first gear.
- If the vehicle is facing downhill, turn the front wheels toward the curb. If you have a manual transmission, put it in reverse gear.
- Make sure the parking brake is fully released before driving away. Driving with the parking brake partially set can overheat or damage the rear brakes.

Your Honda is equipped with front disc brakes. The brakes on the rear wheels may be disc or drum, depending on the model. A power assist helps reduce the effort needed on the brake pedal. The ABS helps you retain steering control when braking very hard.

Resting your foot on the pedal keeps the brakes applied lightly, builds up heat, and reduces their effectiveness. It also keeps your brake lights on all the time, confusing drivers behind you.

Constant application of the brakes when going down a long hill builds up heat and reduces their effectiveness. Use the engine to assist the brakes by taking your foot off the accelerator and downshifting to a lower gear.

Check the brakes after driving through deep water. Apply the brakes moderately to see if they feel normal. If not, apply them gently and frequently until they do. Be extra cautious in your driving.

Braking System Design

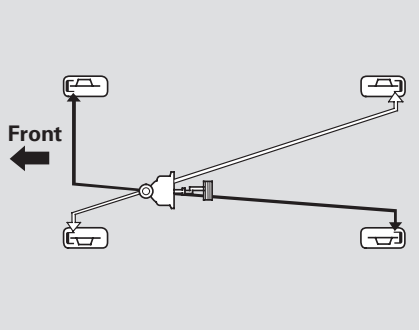

The hydraulic system that operates the brakes has two separate circuits. Each circuit works diagonally across the vehicle (the left-front brake is connected with the right-rear brake, etc.). If one circuit should develop a problem, you will still have braking at two wheels.

Brake Wear Indicators

The front and rear disc brakes on all models have audible brake wear indicators. All models except for the 4-cylinder LX have rear disc brakes as standard equipment.

If the brake pads need replacing, you will hear a distinctive, metallic screeching sound when you apply the brake pedal. If you do not have the brake pads replaced, they will screech all the time. It is normal for the brakes to occasionally squeal or squeak when you apply them.

Anti-lock Brakes

The Anti-lock Brake System (ABS) helps prevent the brakes from locking up and helps you retain steering control by pumping the brakes rapidly, much faster than a person can do it.

The ABS also balances the front-to-rear braking distribution according to vehicle loading.

You should never pump the brake pedal; this defeats the purpose of the ABS. Let the ABS work for you by always keeping firm, steady pressure on the brake pedal as you steer away from the hazard. This is sometimes referred to as “stomp and steer.”

Activating the Anti-lock Brakes

You will feel a pulsation in the brake pedal when the ABS activates, and you may hear some noise. This is normal: it is the ABS rapidly pumping the brakes. On dry pavement, you will need to press on the brake pedal very hard before the ABS activates. However, you may feel the ABS activate immediately if you are trying to stop on snow or ice.

ABS Indicator

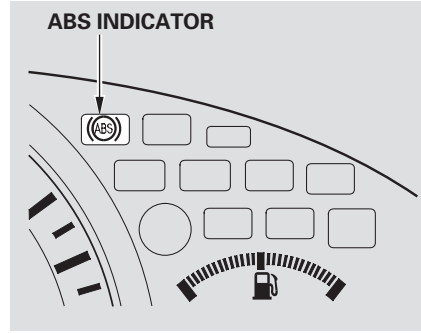

If the ABS indicator comes on, the anti-lock function of the braking system has shut down. The brakes still work like a conventional system, but without anti-lock. You should have the dealer inspect your vehicle as soon as possible.

CONTINUED

If the ABS indicator and the brake system indicator come on together, and the parking brake is fully released, the front-to-rear braking distribution system may also be shut down.

Test your brakes as instructed on page 271 . If the brakes feel normal, drive slowly and have your vehicle repaired by your Honda dealer as soon as possible. Avoid sudden hard braking which could cause the rear wheels to lock up and possibly lead to a loss of control.

On all V6 models
The TCS indicator will come on along with the ABS indicator.

Important Safety Reminders
ABS does not reduce the time or distance it takes to stop the vehicle. It only helps with the steering control during braking.

ABS will not prevent a skid that results from changing direction abruptly, such as trying to take a corner too fast or making a sudden lane change. Always drive at a safe speed for the road and weather conditions.

ABS cannot prevent the loss of stability. Always steer moderately when you are braking hard. Severe or sharp steering wheel movement can still cause your vehicle to veer into oncoming traffic or off the road.

A vehicle with ABS may require a longer distance to stop on loose or uneven surfaces, such as gravel or snow, than a vehicle without anti-lock. Slow down and allow a greater distance between vehicles under those conditions.

On all V6 models
Your Honda is equipped with a Traction Control System (TCS) to assist you in maintaining traction while driving slowly on loose or slippery surfaces.

TCS monitors the speed of all four wheels. When it senses a front wheel losing traction, it applies braking to that wheel. The TCS Activation indicator flashes when this occurs.

Driving with TCS requires no special skills or technique. The TCS does not control your vehicle's whole braking system and cannot prevent skidding if you enter a corner too fast. It is still your responsibility to drive at reasonable speeds and to leave a sufficient margin of safety.

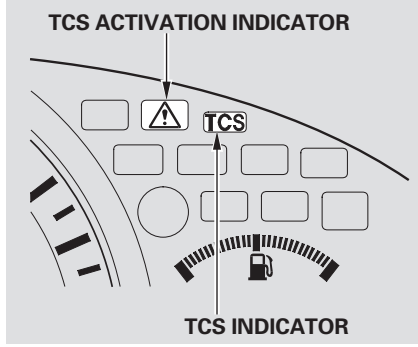

When starting out or driving on a loose or slippery road surface, you may notice that the vehicle does not respond to the accelerator in the same way it does at other times. This is a sign TCS is activating. You will see the TCS Activation indicator flash.

The TCS indicator (see page 60) and the TCS Activation indicator come on and stay on when there is a problem with the TCS.

You should still install winter tires on your vehicle during the winter. Make sure to use the same size originally supplied with the vehicle. Exercise the same caution in winter driving as you would if your vehicle was not equipped with TCS.

Driving with the compact spare tire installed (see page 256) may activate the TCS. You should turn off the system.

TCS ON/OFF Switch

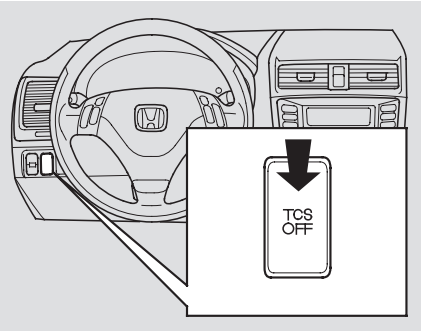

This switch is under the side vent. It lets you turn the Traction Control System on and off. You cannot turn off the TCS while the TCS Activation indicator is flashing.

Deactivate the system by pressing the TCS On/Off switch. The TCS Activation indicator comes on as a reminder. Pressing the switch again turns the system back on.

The Traction Control System turns on every time you start the engine, even if you turned it off the last time you drove the vehicle.

TCS Activation Indicator

The TCS Activation indicator comes on or flashes under the following conditions:

- When you turn the ignition switch to ON (II).
- When you manually turn off TCS.
- It flashes when TCS is regulating wheelspin.
- If the system's diagnostics senses a problem with TCS, the indicator will come on and stay on along with the TCS indicator.

If the TCS indicator comes on while driving, pull to the side of the road when it is safe and turn off the engine. Reset the system by re-starting the engine, and watch the TCS indicator. If the indicator remains on, or comes back on while driving, have the TCS inspected by your Honda dealer. You can still drive the vehicle without TCS.

The TCS indicator may occasionally come on for one or two seconds and then go out. This is normal.

This indicator will come on along with the ABS indicator if there is a problem in the anti-lock brake system (see **ABS Indicator** on page 189).

If the TCS indicator comes on along with the Brake System indicator, it indicates a problem in the brake system (see **Brake System Indicator** on page 271).

To safely tow a trailer, you should observe the load limits, use the proper equipment, and follow the guidelines in this section.

⚠ WARNING

Exceeding any load limit or improperly loading your vehicle and trailer can cause a crash in which you can be seriously hurt or killed.

Check the loading of your vehicle and trailer carefully before starting to drive.

Load Limits

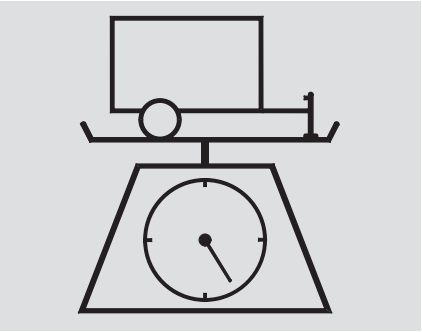

- **Total Trailer Weight:** The total weight of the trailer and everything loaded in it must not exceed 1,000 lbs (450 kg). Towing a load that is too heavy can seriously affect your vehicle's handling and performance. It can also damage the engine and drivetrain.

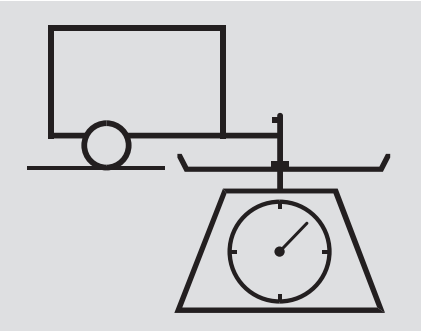

- **Tongue Load:** The weight that the tongue of a fully-loaded trailer puts on the hitch should be approximately 10 percent of the trailer weight. Too little tongue load can make the trailer unstable and cause it to sway. Too much tongue load reduces front-tire traction and steering control.

To achieve a proper tongue load, start by loading 60 percent of the load toward the front of the trailer and 40 percent toward the rear, then re-adjust the load as needed.

- **Gross Vehicle Weight Rating (GVWR):**
  The total weight of the vehicle, all occupants, all cargo, and the tongue load must not exceed:

  4-cylinder models:
  (LX)
  4,080 lbs (1,850 kg)
  (EX, EX-L)
  4,125 lbs (1,870 kg)

  6-cylinder models:
  4,300 lbs (1,950 kg)

- **Gross Axle Weight Rating (GAWR):**
  The total weight of the vehicle, all occupants, all cargo, and the tongue load must not exceed:

  4-cylinder models:
  (LX)
  2,195 lbs (995 kg)
  on the front axle
  1,960 lbs (890 kg)
  on the rear axle
  (EX, EX-L)
  2,225 lbs (1,010 kg)
  on the front axle
  1,985 lbs (900 kg)
  on the rear axle

  6-cylinder models:
  2,360 lbs (1,070 kg)
  on the front axle
  2,005 lbs (910 kg)
  on the rear axle

Checking Loads
The best way to confirm that vehicle and trailer weights are within limits is to have them checked at public scale.

Using a suitable scale or a special tongue load gauge, check the tongue load the first time you set up a towing combination (a fully-loaded vehicle and trailer), then recheck the tongue load whenever the conditions change.

Safety Chains
Always use safety chains. Make sure they are secured to both the trailer and hitch, and that they cross under the tongue so they can catch the trailer if it becomes unhitched. Leave enough slack to allow the trailer to turn corners easily, but do not let chains drag on the ground.

Towing Equipment and Accessories

Towing generally requires a variety of supplemental equipment. To ensure the best quality, we recommend that you purchase Honda equipment whenever possible.

Discuss any additional needs with your trailer sales or rental agency, and make sure all equipment is properly installed, maintained, and also meets state and province regulations.

Hitches

Any hitch used on your vehicle must be properly bolted to the underbody.

Trailer Brakes

Honda recommends that any trailer having a total weight of 1,000 lbs (450 kg) or more be equipped with its own electric or surge-type brakes.

If you choose electric brakes, be sure they are electrically actuated. Do not attempt to tap into your vehicle's hydraulic system. No matter how successful it may seem, any attempt to attach trailer brakes to your vehicle's hydraulic system will lower braking effectiveness and create a potential hazard.

See your trailer dealer for more information on installing electric brakes.

Trailer Lights

Trailer lights and equipment must comply with federal, state, province, and local regulations. Check with your local recreational vehicle dealer for the requirements in your area, and use only equipment designed for your vehicle.

Since lighting and wiring vary by trailer type and brand, you should have a qualified technician install a suitable connector between the vehicle and the trailer. Improper equipment or installation can cause damage to your vehicle's electrical system and affect your vehicle warranty.

Additional Trailer Equipment
Many states and Canadian provinces require special outside mirrors when towing a trailer. Even if they don't, you should install special mirrors if you cannot clearly see behind you, or if the trailer creates a blind spot.

Ask your trailer sales or rental agency if any other items are recommended or required for your towing situation.

Pre-Tow Checklist
When preparing to tow, and before driving away, be sure to check the following:

- The vehicle has been properly serviced, and the tires, brakes, suspension, and cooling system are in good operating condition.
- All weights and loads are within limits (see pages 194 and 195).
- The hitch, safety chains, and any other attachments are secure.
- All items on and in the trailer are properly secured and cannot shift while you drive.
- The lights and brakes on your vehicle and the trailer are working properly.
- Your vehicle tires and spare are properly inflated (see page 285), and the trailer tires and spare are inflated as recommended by the trailer maker.

Handling Crosswinds and Buffeting
Crosswinds and air turbulence caused by passing trucks can disrupt your steering and cause trailer swaying. When being passed by a large vehicle, keep a constant speed and steer straight ahead. Do not try to make quick steering or braking corrections.

Backing Up
Always drive slowly and have someone guide you when backing up. Grip the *bottom* of the steering wheel; then turn the wheel to the left to get the trailer to move to the left, and turn the wheel right to move the trailer to the right.

Parking
Follow all normal precautions when parking, including firmly setting the parking brake and putting the transmission in Park (automatic) or in 1st or Reverse (manual). Also, place wheel chocks at each of the trailer's tires.

Driving Safely With a Trailer

The added weight, length, and height of a trailer will affect your vehicle's handling and performance, so driving with a trailer requires some special driving skills and techniques.

For your safety and the safety of others, take time to practice driving maneuvers before heading for the open road, and follow the guidelines below.

Towing Speeds and Gears
Drive slower than normal in all driving situations, and obey posted speed limits for vehicles with trailers. If you have an automatic transmission, use D position when towing a trailer on level roads. D3 is the proper shift lever position to use when towing a trailer in hilly terrain. (See "***Driving on Hills***" in the next column for additional gear information.)

Making Turns and Braking
Make turns more slowly and wider than normal. The trailer tracks a smaller arc than your vehicle, and it can hit or run over something the vehicle misses. Allow more time and distance for braking. Do not brake or turn suddenly as this could cause the trailer to jackknife or turn over.

Driving on Hills

When climbing hills, closely watch your temperature gauge. If it nears the red (Hot) mark, turn the air conditioning off, reduce speed and, if necessary, pull to the side of the road to let the engine cool.

If the automatic transmission shifts frequently within 3rd, 4th, and 5th gears while going up a hill, shift to D3.

If you must stop when facing uphill, use the foot brake or parking brake. Do not try to hold the vehicle in place by pressing on the accelerator, as this can cause the automatic transmission to overheat.

When driving down hills, reduce your speed and shift down to 2nd gear. Do not “ride” the brakes, and remember it will take longer to slow down and stop when towing a trailer.

This section explains why it is important to keep your vehicle well maintained and how to follow basic maintenance safety precautions.

This section also includes Maintenance Schedules for normal driving and severe driving conditions, a Maintenance Record, and instructions for simple maintenance tasks you may want to take care of yourself.

If you have the skills and tools to perform more complex maintenance tasks on your Honda, you may want to purchase the Service Manual. See page 303 for information on how to obtain a copy, or see your Honda dealer.

Maintenance Safety 202
Maintenance Schedule 203
Maintenance Schedule (4-cylinder Models) 205
Maintenance Record 207
Maintenance Schedule (6-cylinder Models) 210
Maintenance Record 212
Fluid Locations 215
Adding Engine Oil 217
Changing the Oil and Filter 218
Engine Coolant 221
Windshield Washers 224
Transmission Fluid 225
Automatic Transmission 225
5-speed Manual Transmission 228
6-speed Manual Transmission 228
Brake and Clutch Fluid 230
Power Steering Fluid 231
Timing Belt 232
Hood Latch 232
Lights 233
Seat Belts 240
Floor Mats 240
Dust and Pollen Filter 242
Wiper Blades 243
Tires 245
Check the Battery 252
Vehicle Storage 254

All service items not detailed in this section should be performed by a Honda technician or other qualified mechanic.

Important Safety Precautions
To eliminate potential hazards, read the instructions before you begin, and make sure you have the tools and skills required.

- Make sure your vehicle is parked on level ground, the parking brake is set, and the engine is off.
- To clean parts, use a commercially available degreaser or parts cleaner, not gasoline.
- To reduce the possibility of fire or explosion, keep cigarettes, sparks, and flames away from the battery and all fuel-related parts.
- Wear eye protection and protective clothing when working with the battery or compressed air.

⚠ WARNING

Improperly maintaining this vehicle or failing to correct a problem before driving can cause a crash in which you can be seriously hurt or killed.

Always follow the inspection and maintenance recommendations, and schedules in this owner's manual.

Potential Vehicle Hazards

- **Carbon Monoxide poison from engine exhaust.** Be sure there is adequate ventilation whenever you operate the engine.
- **Burns from hot parts.** Let the engine and exhaust system cool before touching any parts.
- **Injury from moving parts.** Do not run the engine unless instructed to do so.

⚠ WARNING

Failure to properly follow maintenance instructions and precautions can cause you to be seriously hurt or killed.

Always follow the procedures and precautions in this owner's manual.

Some of the most important safety precautions are given here. However, we cannot warn you of every conceivable hazard that can arise in performing maintenance. Only you can decide whether or not you should perform a given task.

The maintenance schedule assumes you will use your vehicle as normal transportation for passengers and their possessions. You should also follow these recommendations:

- Avoid exceeding your vehicle's load limit. This puts excess stress on the engine, brakes, and many other vehicle parts. The load limit is shown on the tire information label on the driver's doorjamb.
- Operate your vehicle on reasonable roads within legal speed limits.
- Drive your vehicle regularly over a distance of several miles (kilometers).
- Always use unleaded gasoline with the proper octane rating (see page 164).

Which Schedule to Follow: Service your vehicle according to the time and mileage periods on one of the Maintenance Schedules on the following pages.

U.S. Owners — Follow the Maintenance Schedule for Severe Conditions if you drive your vehicle MAINLY under one or more of the following conditions.

- Driving less than 5 miles (8 km) per trip or, in freezing temperatures, driving less than 10 miles (16 km) per trip.
- Driving in extremely hot [over 90°F (32°C)] conditions.
- Extensive idling or long periods of stop and go driving, such as a taxi or a commercial delivery vehicle.
- Trailer towing, driving with a roof rack, or driving in mountainous conditions.
- Driving on muddy, dusty, or de-iced roads.

NOTE: If you only OCCASIONALLY drive under a "severe" condition, you should follow the Maintenance Schedule for Normal Conditions.

Canadian Owners — Follow the Maintenance Schedule for Severe Conditions.

Servicing Your Vehicle
Your authorized Honda dealer knows your vehicle best and can provide competent, efficient service. However, service at a dealer is not mandatory to keep your warranties in effect. Maintenance may be done by any qualified service facility or skilled person to keep your warranties in effect. Keep all the receipts as proof of completion, and have the person who does the work fill out the Maintenance Record. Check your warranty booklet for more information.

We recommend the use of Honda parts and fluids whenever you have maintenance done.

U.S. Vehicles: **Maintenance, replacement, or repair of emissions control devices and systems may be done by any automotive repair establishment or individual using parts that are "certified" to EPA standards.**

According to state and federal regulations, failure to perform maintenance on the items marked with # will not void your emissions warranties. However, Honda recommends that all maintenance services be performed at the recommended time or mileage period to ensure long-term reliability.

Owner's Maintenance Checks
You should check the following items at the specified intervals. If you are unsure of how to perform any check, turn to the appropriate page listed.

- Engine oil level — Check every time you fill the fuel tank. See page 168 .
- Engine coolant level — Check the radiator reserve tank every time you fill the fuel tank. See page 169 .
- Automatic transmission — Check the fluid level monthly. See page 225 .
- Brakes — Check the fluid level monthly. See page 230 .
- Tires — Check the tire pressure monthly. Examine the tread for wear and foreign objects. See page 245 .
- Lights — Check the operation of the headlights, parking lights, taillights, high-mount brake light, and license plate lights monthly. See page 233 .

Service the items listed at the indicated distance (or time, if given).															
	miles x 1,000	10	20	30	40	50	60	70	80	90	100	110	120	130	140	150
	km x 1,000	16	32	48	64	80	96	112	128	144	160	176	192	208	224	240
Check engine oil and coolant		Check oil and coolant at each fuel stop														
Check tires		Check inflation and condition once a month														
Replace engine oil		Every 10,000 miles (16,000 km) or every 1 year, whichever comes first														
Rotate tires (follow pattern on page 248)		Every 10,000 miles (16,000 km)														
Replace engine oil filter Check front and rear brake wear Check parking brake adjustment Inspect the following items: Tie-rod ends, steering gearbox, and boots Suspension components Driveshaft boots Brake hoses and lines (including ABS) All fluid levels and condition of fluids Exhaust system# Fuel lines and connections#		Every 20,000 miles (32,000 km) or every 1 year, whichever comes first														
Inspect drive belt Replace dust and pollen filter		Every 30,000 miles (48,000 km) or every 2 years, whichever comes first														
Replace air cleaner element				●			●			●			●			●
Replace spark plugs												●				
Inspect valve clearance		Inspect every 110,000 miles (176,000 km), otherwise adjust only if noisy														
Replace automatic transmission fluid*													●			
Replace manual transmission fluid		Every 120,000 miles (192,000 km) or every 6 years, whichever comes first														
Inspect idle speed		Every 160,000 miles (256,000 km)														
Replace engine coolant		At 120,000 miles (192,000 km) or 10 years, then every 60,000 miles (96,000 km) or 5 years														
Replace brake fluid		Every 3 years (independent of mileage)														

#: See information on maintenance and emissions warranty, last column, page 204 .
*: Replace at 120,000 miles (192,000 km) or 6 years, then every 90,000 miles (144,000 km) or 5 years.

4-cylinder Models

Service the items listed at the indicated distance (or time, if given).															
	miles x 1,000	10	20	30	40	50	60	70	80	90	100	110	120	130	140	150
	km x 1,000	16	32	48	64	80	96	112	128	144	160	176	192	208	224	240
Check engine oil and coolant		Check oil and coolant at each fuel stop														
Check tires		Check inflation and condition once a month														
Replace engine oil		Every 5,000 miles (8,000 km) or every 6 months, whichever comes first														
Rotate tires (follow pattern on page 248)		Every 10,000 miles (16,000 km)														
Replace engine oil filter Check front and rear brake wear Lubricate all hinges, locks and latches Inspect the following items: Tie-rod ends, steering gearbox, and boots Suspension components Driveshaft boots		Every 10,000 miles (16,000 km) or every 1 year, whichever comes first														
Check parking brake adjustment Inspect the following items: Brake hoses and lines (including ABS) All fluid levels and condition of fluids Exhaust system# Fuel lines and connections# Lights and controls/vehicle underbody		Every 20,000 miles (32,000 km) or every 1 year, whichever comes first														
Inspect drive belt Replace dust and pollen filter*1		Every 30,000 miles (48,000 km) or every 2 years, whichever comes first														
Replace air cleaner element		Every 15,000 miles (24,000 km) (Use normal schedule except in dusty condition)														
Replace spark plugs												●				
Inspect valve clearance		Inspect every 110,000 miles (176,000 km), otherwise adjust only if noisy														
Replace automatic transmission fluid*2							●			●			●			●
Replace manual transmission fluid		Every 60,000 miles (96,000 km) or every 3 years, whichever comes first														
Inspect idle speed		Every 160,000 miles (256,000 km)														
Replace engine coolant		At 120,000 miles (192,000 km) or 10 years, then every 60,000 miles (96,000 km) or 5 years														
Replace brake fluid		Every 3 years (independent of mileage)														

#: See information on maintenance and emissions warranty, last column, page 204 .
*1: See dust and pollen filter on page 242 for replacement information under special driving conditions.
*2: Replace at 60,000 miles (96,000 km) or 3 years, then every 30,000 miles (48,000 km) or 2 years.

Maintenance Record for 4-cylinder Models *(for Normal and Severe Schedules)*

You or the servicing dealer can record all completed maintenance here, whether you follow the schedule for normal conditions (page 205) or severe conditions (page 206). Keep the receipts for all work done on your vehicle.

5,000 mi 8,000 km	Signature or dealer stamp	mi/km Date
10,000 mi 16,000 km		mi/km Date
15,000 mi 24,000 km		mi/km Date
20,000 mi 32,000 km		mi/km Date
25,000 mi 40,000 km		mi/km Date

30,000 mi 48,000 km	Signature or dealer stamp	mi/km Date
35,000 mi 56,000 km		mi/km Date
40,000 mi 64,000 km		mi/km Date
45,000 mi 72,000 km		mi/km Date
50,000 mi 80,000 km		mi/km Date

CONTINUED

Maintenance Record for 4-cylinder Models *(for Normal and Severe Schedules)*

55,000 mi 88,000 km	Signature or dealer stamp	mi/km Date
60,000 mi 96,000 km		mi/km Date
65,000 mi 104,000 km		mi/km Date
70,000 mi 112,000 km		mi/km Date
75,000 mi 120,000 km		mi/km Date

80,000 mi 128,000 km	Signature or dealer stamp	mi/km Date
85,000 mi 136,000 km		mi/km Date
90,000 mi 144,000 km		mi/km Date
95,000 mi 152,000 km		mi/km Date
100,000 mi 160,000 km		mi/km Date

105,000 mi 168,000 km	Signature or dealer stamp	mi/km Date
110,000 mi 176,000 km		mi/km Date
115,000 mi 184,000 km		mi/km Date
120,000 mi 192,000 km		mi/km Date
125,000 mi 200,000 km		mi/km Date

130,000 mi 208,000 km	Signature or dealer stamp	mi/km Date
135,000 mi 216,000 km		mi/km Date
140,000 mi 224,000 km		mi/km Date
145,000 mi 232,000 km		mi/km Date
150,000 mi 240,000 km		mi/km Date

6-cylinder Models

Service the items listed at the indicated distance (or time, if given).											
	miles x 1,000	15	30	45	60	75	90	105	120	135	150
	km x 1,000	24	48	72	96	120	144	168	192	216	240
Check engine oil and coolant		Check oil and coolant at each fuel stop									
Check tires		Check inflation and condition once a month									
Replace engine oil		Every 7,500 miles (12,000 km) or every 1 year, whichever comes first									
Rotate tires (follow pattern on page 248)		Every 7,500 miles (12,000 km)									
Replace engine oil filter Check front and rear brake wear Check parking brake adjustment Inspect the following items: Tie-rod ends, steering gearbox, and boots Suspension components Driveshaft boots Brake hoses and lines (including ABS) All fluid levels and condition of fluids Exhaust system# Fuel lines and connections#		Every 15,000 miles (24,000 km) or every 1 year, whichever comes first									
Inspect drive belt Replace dust and pollen filter		Every 30,000 miles (48,000 km) or every 2 years, whichever comes first									
Replace air cleaner element			●		●		●		●		●
Replace spark plugs								●			
Inspect valve clearance		Inspect every 105,000 miles (168,000 km), otherwise adjust only if noisy									
Replace automatic transmission fluid*									●		
Replace manual transmission fluid		Every 120,000 miles (192,000 km) or every 6 years, whichever comes first									
Inspect idle speed		Every 165,000 miles (264,000 km)									
Replace timing belt and inspect water pump		Every 105,000 miles (168,000 km) or every 7 years, whichever comes first									
Replace engine coolant		At 120,000 miles (192,000 km) or 10 years, then every 60,000 miles (96,000 km) or 5 years									
Replace brake fluid		Every 3 years (independent of mileage)									

#: See information on maintenance and emissions warranty, last column, page 204 .
*: Replace at 120,000 miles (192,000 km) or 6 years, then every 90,000 miles (144,000 km) or 5 years.

Service the items listed at the indicated distance (or time, if given).											
	miles x 1,000	15	30	45	60	75	90	105	120	135	150
	km x 1,000	24	48	72	96	120	144	168	192	216	240
Check engine oil and coolant		Check oil and coolant at each fuel stop									
Check tires		Check inflation and condition once a month									
Replace engine oil and oil filter		Every 3,750 miles (6,000 km) or every 6 months, whichever comes first									
Rotate tires (follow pattern on page 248)		Every 7,500 miles (12,000 km)									
Check front and rear brake wear Inspect the following items: Tie-rod ends, steering gearbox, and boots Suspension components Driveshaft boots		Every 7,500 miles (12,000 km) or every 6 months, whichever comes first									
Check parking brake adjustment Lubricate all hinges, locks and latches Inspect the following items: Brake hoses and lines (including ABS) All fluid levels and condition of fluids Exhaust system# Fuel lines and connections# Lights and controls/vehicle underbody		Every 15,000 miles (24,000 km) or every 1 year, whichever comes first									
Inspect drive belt Replace dust and pollen filter*1		Every 30,000 miles (48,000 km) or every 2 years, whichever comes first									
Replace air cleaner element		Every 15,000 miles (24,000 km) (Use normal schedule except in dusty condition)									
Replace spark plugs								●			
Inspect valve clearance		Inspect every 105,000 miles (168,000 km), otherwise adjust only if noisy									
Replace automatic transmission fluid*2					●		●		●		●
Replace manual transmission fluid		Every 60,000 miles (96,000 km) or every 3 years, whichever comes first									
Inspect idle speed		Every 165,000 miles (264,000 km)									
Replace timing belt#*3, and inspect water pump		Every 105,000 miles (168,000 km) or every 7 years, whichever comes first									
Replace engine coolant		At 120,000 miles (192,000 km) or 10 years, then every 60,000 miles (96,000 km) or 5 years									
Replace brake fluid		Every 3 years (independent of mileage)									

#: See information on maintenance and emissions warranty, last column, page 204 .
*1: See dust and pollen filter on page 242 for replacement information under special driving conditions.
*2: Replace at 60,000 miles (96,000 km) or 3 years, then every 30,000 miles (48,000 km) or 2 years.
*3: See timing belt on page 232 for replacement information under special driving conditions.

Maintenance Record for 6-cylinder Models *(for Normal and Severe Schedules)*

You or the servicing dealer can record all completed maintenance here, whether you follow the schedule for normal conditions (page 210) or severe conditions (page 211). Keep the receipts for all work done on your vehicle.

3,750 mi 6,000 km	Signature or dealer stamp	mi/km Date
7,500 mi 12,000 km		mi/km Date
11,250 mi 18,000 km		mi/km Date
15,000 mi 24,000 km		mi/km Date
18,750 mi 30,000 km		mi/km Date
22,500 mi 36,000 km		mi/km Date
26,250 mi 42,000 km		mi/km Date
30,000 mi 48,000 km		mi/km Date

33,750 mi 54,000 km	Signature or dealer stamp	mi/km Date
37,500 mi 60,000 km		mi/km Date
41,250 mi 66,000 km		mi/km Date
45,000 mi 72,000 km		mi/km Date
48,750 mi 78,000 km		mi/km Date
52,500 mi 84,000 km		mi/km Date
56,250 mi 90,000 km		mi/km Date
60,000 mi 96,000 km		mi/km Date

63,750 mi 102,000 km	Signature or dealer stamp	mi/km Date
67,500 mi 108,000 km		mi/km Date
71,250 mi 114,000 km		mi/km Date
75,000 mi 120,000 km		mi/km Date
78,750 mi 126,000 km		mi/km Date
82,500 mi 132,000 km		mi/km Date
86,250 mi 138,000 km		mi/km Date
90,000 mi 144,000 km		mi/km Date

93,750 mi 150,000 km	Signature or dealer stamp	mi/km Date
97,500 mi 156,000 km		mi/km Date
101,250 mi 162,000 km		mi/km Date
105,000 mi 168,000 km		mi/km Date
108,750 mi 174,000 km		mi/km Date
112,500 mi 180,000 km		mi/km Date
116,250 mi 186,000 km		mi/km Date
120,000 mi 192,000 km		mi/km Date

CONTINUED

Maintenance Record for 6-cylinder Models *(for Normal and Severe Schedules)*

123,750 mi 198,000 km	Signature or dealer stamp	mi/km Date
127,500 mi 204,000 km		mi/km Date
131,250 mi 210,000 km		mi/km Date
135,000 mi 216,000 km		mi/km Date
138,750 mi 222,000 km		mi/km Date
142,500 mi 228,000 km		mi/km Date
146,250 mi 234,000 km		mi/km Date
150,000 mi 240,000 km		mi/km Date

4-cylinder Models

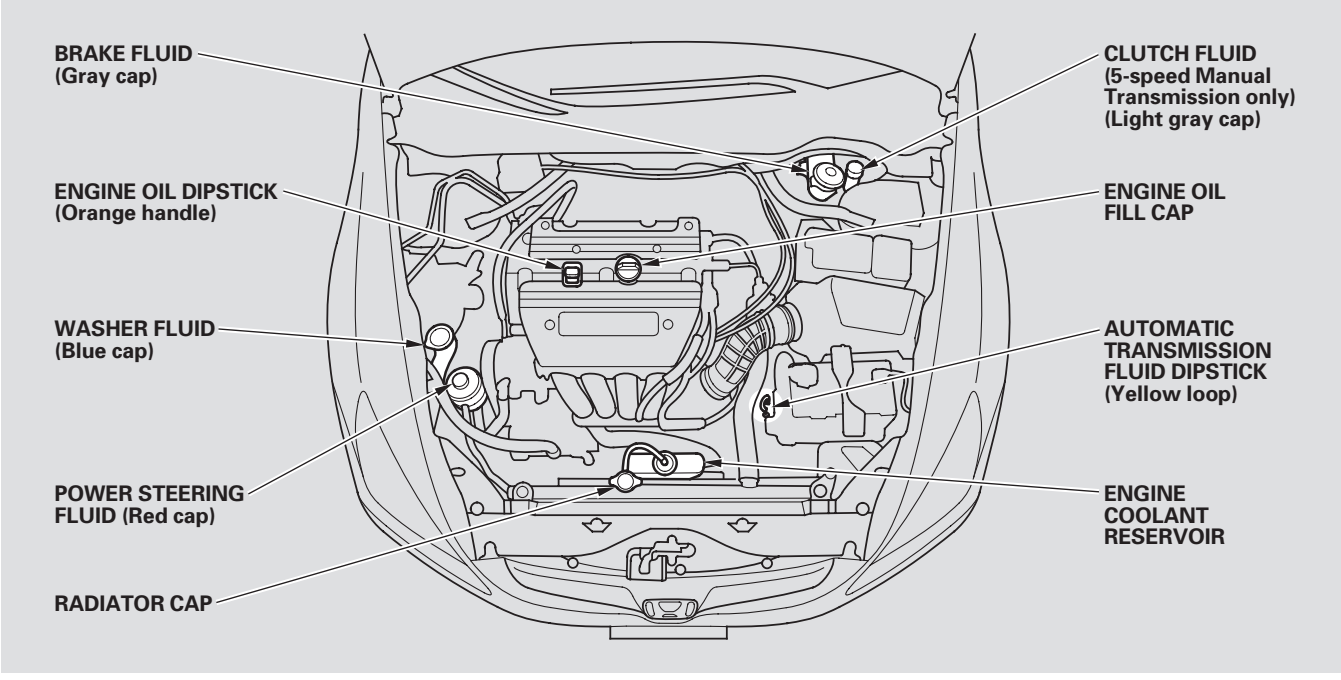

6-cylinder Models

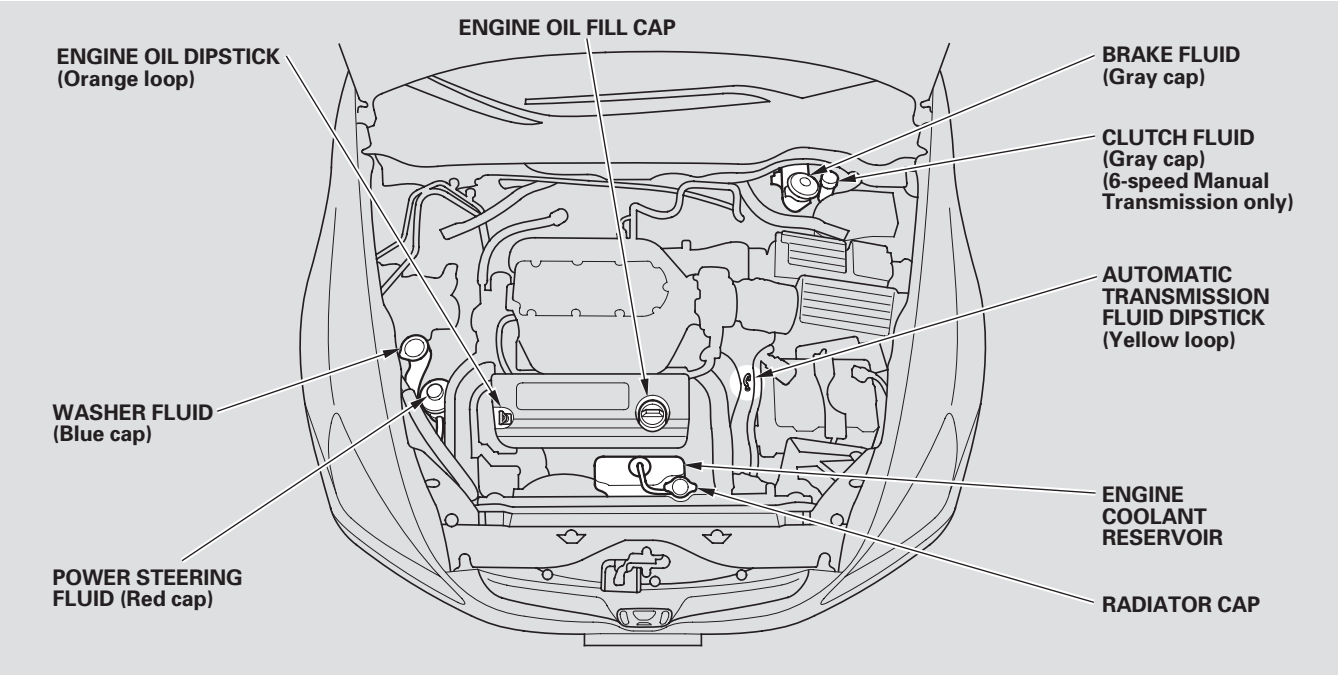

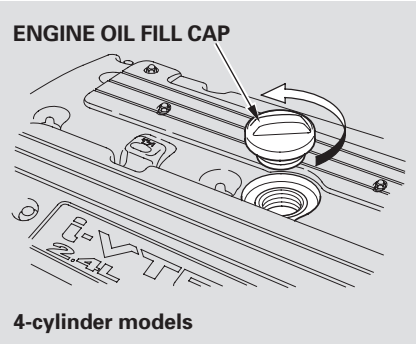

4-cylinder models

Unscrew and remove the engine oil fill cap on top of the valve cover. Pour in the oil slowly and carefully so you do not spill. Clean up any spills immediately. Spilled oil could damage components in the engine compartment.

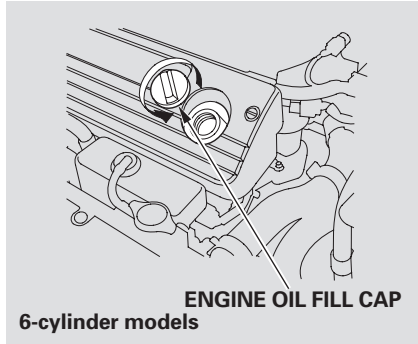

6-cylinder models

Install the engine oil fill cap and tighten it securely. Wait a few minutes and recheck the oil level. Do not fill above the upper mark; you could damage the engine.

Recommended Engine Oil

Oil is a major contributor to your engine's performance and longevity. Always use a premium-grade 5W-20 detergent oil displaying the API Certification Seal. This seal indicates the oil is energy conserving, and that it meets the American Petroleum Institute's latest requirements.

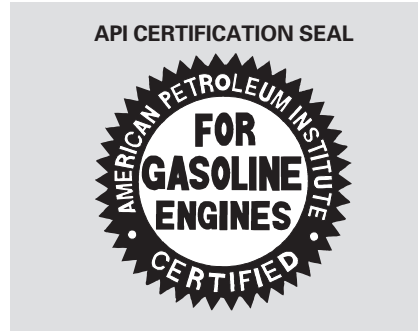

CONTINUED

Honda Motor Oil is the preferred 5W-20 lubricant for your vehicle. It is highly recommended that you use Honda Motor Oil in your vehicle for optimum engine protection. Make sure the API Certification Seal says “For Gasoline Engines”.

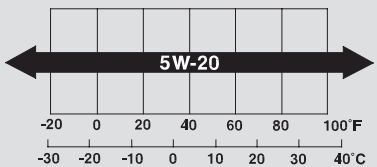

The oil viscosity or weight is provided on the container’s label. 5W-20 oil is formulated for year-round protection of your Honda to improve cold weather starting and fuel economy.

Synthetic Oil
You may use a synthetic motor oil if it meets the same requirements given for a conventional motor oil: it displays the API Certification Seal and it is the proper weight. You must follow the oil and filter change intervals given on the maintenance schedule.

Engine Oil Additives
Your Honda does not require any oil additives. Additives may adversely affect your engine’s or transmission’s performance and durability.

Changing the Oil and Filter
Always change the oil and filter according to the recommendations in the maintenance schedule. The oil and filter collect contaminants that can damage your engine if they are not removed regularly.

Changing the oil and filter requires special tools and access from underneath the vehicle. The vehicle should be raised on a service station-type hydraulic lift for this service. Unless you have the knowledge and proper equipment, you should have this maintenance done by a skilled mechanic.

1. Run the engine until it reaches normal operating temperature, then shut it off.

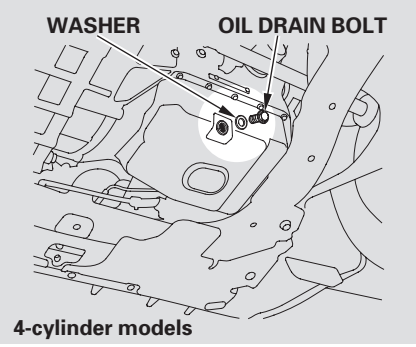

4-cylinder models

2. Open the hood and remove the engine oil fill cap. Remove the oil drain bolt and washer from the bottom of the engine. Drain the oil into an appropriate container.

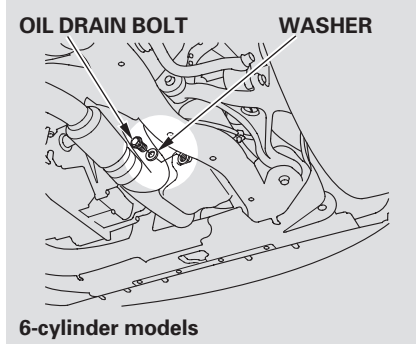

6-cylinder models

3. Remove the oil filter and let the remaining oil drain. A special wrench (available from your Honda dealer) is required.

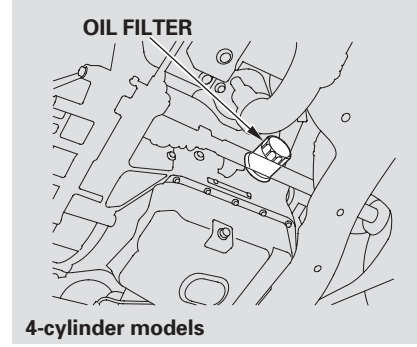

4-cylinder models

4. Install a new oil filter according to the instructions that come with it. Make sure to clean off any dirt and dust on the connecting surface of a new oil filter.

CONTINUED

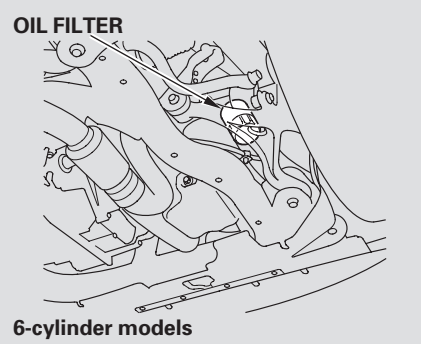

6-cylinder models

5. Put a new washer on the drain bolt, then reinstall the drain bolt. Tighten it to:

   (4-cylinder models)
   33 lbf·ft (44 N·m , 4.5 kgf·m)

   (6-cylinder models)
   29 lbf·ft (39 N·m , 4.0 kgf·m)

6. Refill the engine with the recommended oil.

   Engine oil change capacity (including filter):

   (4-cylinder models)
   4.4 US qt (4.2 ℓ)

   (6-cylinder models)
   4.5 US qt (4.3 ℓ)

7. Replace the engine oil fill cap. Start the engine. The oil pressure indicator should go out within 5 seconds. If it does not, turn off the engine and check your work.

8. Let the engine run for several minutes, then check the drain bolt and oil filter for leaks.

9. Turn off the engine and let it sit for several minutes, then check the oil level on the dipstick. If necessary, add more oil.

NOTICE: *Improper disposal of engine oil can be harmful to the environment. If you change your own oil, please dispose of the used oil properly. Put it in a sealed container and take it to a recycling center. Do not discard it in a trash bin or dump it on the ground.*

Adding Engine Coolant

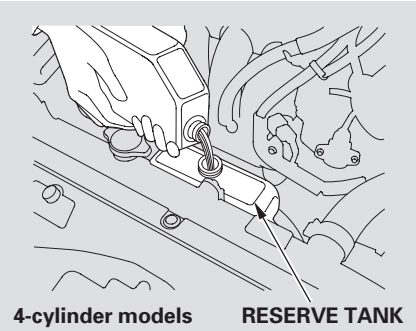

If the coolant level in the reserve tank is at or below the MIN line, add coolant to bring it up to the MAX line. Inspect the cooling system for leaks.

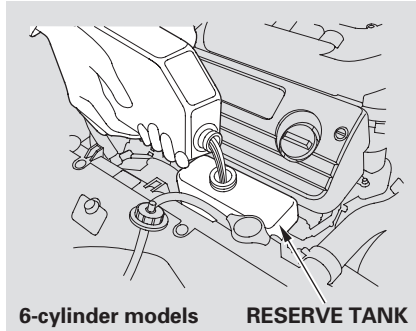

Always use Honda All Season Antifreeze/Coolant Type 2. This coolant is pre-mixed with 50 percent antifreeze and 50 percent water. Never add straight antifreeze or plain water.

If Honda antifreeze/coolant is not available, you may use another major-brand non-silicate coolant as a temporary replacement. Make sure it is a high-quality coolant recommended for aluminum engines. Continued use of any non-Honda coolant can result in corrosion, causing the cooling system to malfunction or fail. Have the cooling system flushed and refilled with Honda antifreeze/coolant as soon as possible.

If the reserve tank is completely empty, you should also check the coolant level in the radiator.

⚠ WARNING

Removing the radiator cap while the engine is hot can cause the coolant to spray out, seriously scalding you.

Always let the engine and radiator cool down before removing the radiator cap.

CONTINUED

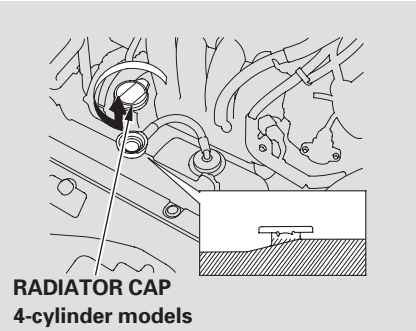

1. When the radiator and engine are cool, relieve any pressure in the cooling system by turning the radiator cap counterclockwise, without pressing down.

2. Remove the radiator cap by pushing down and turning counterclockwise.

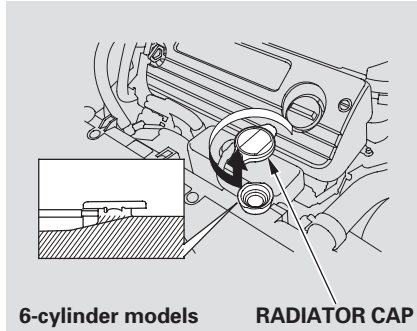

3. The coolant level should be up to the base of the filler neck. Add coolant if it is low.

Pour the coolant slowly and carefully so you do not spill. Clean up any spills immediately; it could damage components in the engine compartment.

4. Put the radiator cap back on, and tighten it fully.

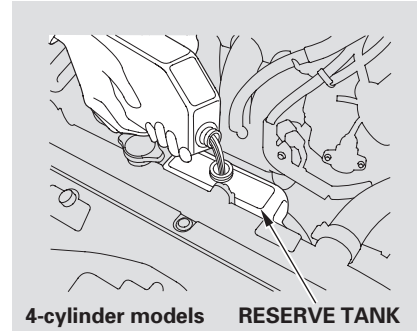

5. Pour coolant into the reserve tank. Fill it to halfway between the MAX and MIN marks. Put the cap back on the reserve tank.

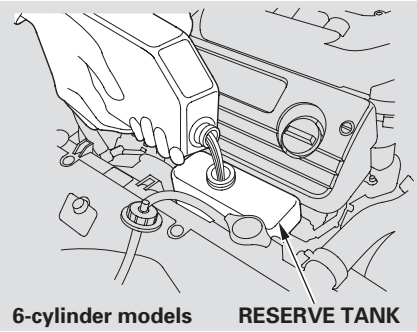

Do not add any rust inhibitors or other additives to your vehicle's cooling system. They may not be compatible with the coolant or engine components.

Check the fluid level in the windshield washer reservoir at least monthly during normal use.

Check the reservoir's fluid level by removing the cap and looking at the level gauge attached to the cap.

On Canadian models: The low washer level indicator will come on when the level is low (see page 63).

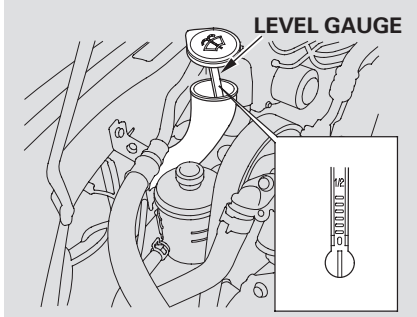

4-cylinder models

Fill the reservoir with a good-quality windshield washer fluid. This increases the cleaning capability and prevents freezing in cold weather.

When you refill the reservoir, clean the edges of the windshield wiper blades with windshield washer fluid on a clean cloth. This will help to condition them.

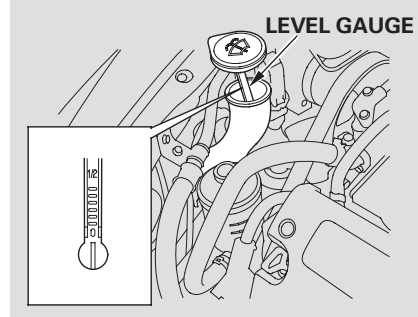

6-cylinder models

NOTICE: *Do not use engine antifreeze or a vinegar/water solution in the windshield washer reservoir. Antifreeze can damage your vehicle's paint, while a vinegar/water solution can damage the windshield washer pump. Use only commercially-available windshield washer fluid.*

Automatic Transmission

4-cylinder models

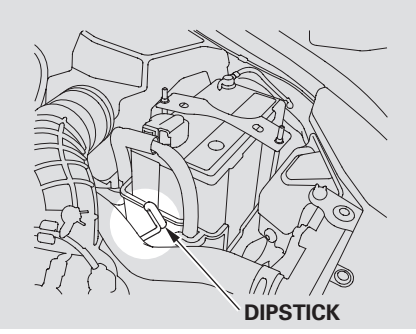

Check the fluid level with the engine at normal operating temperature.

1. Park the vehicle on level ground. Shut off the engine.

2. Remove the dipstick (yellow loop) from the transmission, and wipe it with a clean cloth.

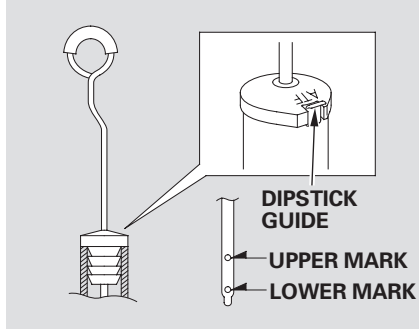

3. Insert the dipstick all the way into the transmission securely as shown in the illustration.
   Make sure the notch in the rubber cap fits in the dipstick guide and that you push the dipstick in all the way.

4. Remove the dipstick and check the fluid level. It should be between the upper and lower marks.

5. If the level is below the lower mark, add fluid into the dipstick tube to bring it to the upper mark.

   Always use Honda ATF-Z1 (Automatic Transmission Fluid). If it's not available, you may use a DEXRON® III automatic transmission fluid as a temporary replacement. However, continued use can affect the shift quality. Have the transmission flushed and refilled with Honda ATF-Z1 as soon as it is convenient.

CONTINUED

To thoroughly flush the transmission, the technician should drain and refill it with Honda ATF-Z1, then drive the vehicle for a short distance. Do this three times. Then drain and refill the transmission a final time.

6. Insert the dipstick all the way back into the transmission securely as shown in the illustration.
   Make sure the notch fits in the dipstick guide and the dipstick is down all the way.

The transmission should be drained and refilled with new fluid according to the time and distance recommendations in the maintenance schedule.

If you are not sure how to add fluid, contact your Honda dealer.

Automatic Transmission
6-cylinder models

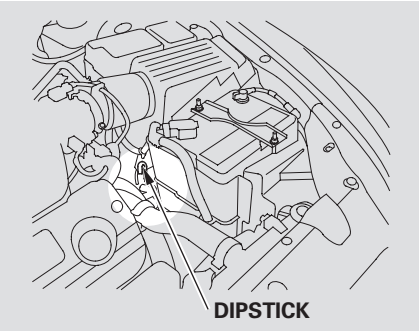

Check the fluid level with the engine at normal operating temperature.

1. Park the vehicle on level ground. Shut off the engine.

2. Remove the dipstick (yellow loop) from the transmission, and wipe it with a clean cloth.

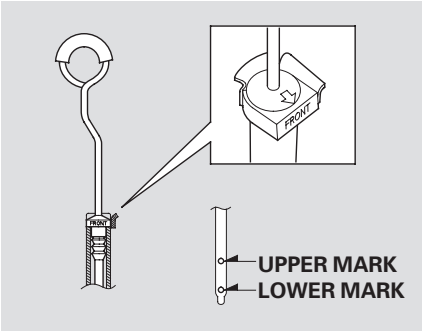

3. Insert the dipstick all the way into the transmission securely as shown in the illustration.
   Make sure the rubber cap on the dipstick fits in the dipstick guide and that you push the dipstick in all the way.

4. Remove the dipstick and check the fluid level. It should be between the upper and lower marks.

5. If the level is below the lower mark, remove the fill plug and add fluid to bring it to the upper mark.

   Pour the fluid slowly and carefully so you do not spill. Clean up any spills immediately; it could damage components in the engine compartment.

   Always use Honda ATF-Z1 (Automatic Transmission Fluid). If it's not available, you may use a DEXRON® III automatic transmission fluid as a temporary replacement. However, continued use can affect the shift quality. Have the transmission flushed and refilled with Honda ATF-Z1 as soon as it is convenient.

To thoroughly flush the transmission, the technician should drain and refill it with Honda ATF-Z1, then drive the vehicle for a short distance. Do this three times. Then drain and refill the transmission a final time.

6. Insert the dipstick all the way back into the transmission securely as shown in the illustration.
   Make sure the rubber cap fits in the dipstick guide and the dipstick is down all the way.

The transmission should be drained and refilled with new fluid according to the time and distance recommendations in the maintenance schedule.

If you are not sure how to add fluid, contact your Honda dealer.

5-speed Manual Transmission

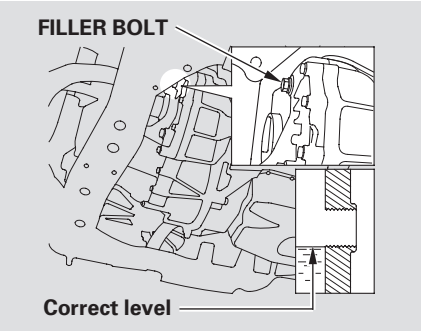

On 4-cylinder models
Check the fluid level with the transmission at normal operating temperature and the vehicle sitting on level ground. Remove the transmission filler bolt, and carefully feel inside the bolt hole with your finger. The fluid level should be up to the edge of the bolt hole. If it is not, add Honda Manual Transmission Fluid (MTF) until it starts to run out of the hole. Reinstall the filler bolt, and tighten it securely.

If Honda MTF is not available, you may use an SAE 10W-30 or 10W-40 viscosity motor oil with the API Certification seal that says “FOR GASOLINE ENGINES” as a temporary replacement. However, motor oil does not contain the proper additives, and continued use can cause stiffer shifting. Replace as soon as it is convenient.

The transmission should be drained and refilled with new fluid according to the time and distance recommendations in the maintenance schedule.

If you are not sure how to check and add fluid, contact your Honda dealer.

6-speed Manual Transmission

On EX-V6 model
Check the fluid level with the transmission at normal operating temperature and the vehicle sitting on level ground.

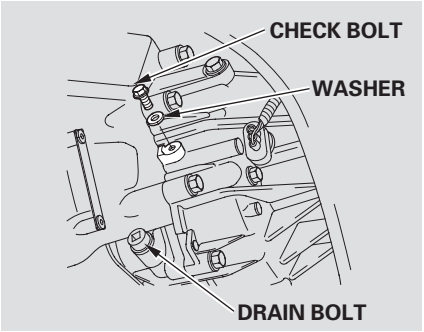

Remove the check bolt and look for transmission fluid coming out of the bolt hole. If a small amount of fluid drips out of the bolt hole, reinstall the check bolt.

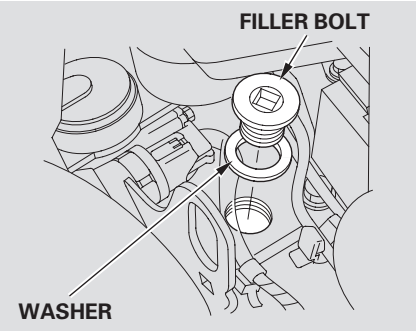

If no fluid comes out, remove the filler bolt. Slowly add Honda Manual Transmission Fluid (MTF) until it starts to run out of the check bolt hole. Let the fluid run out until it stops, then reinstall the check bolt and the filler bolt.

Pour the fluid to the filler hole slowly and carefully so you do not spill. Clean up any spills immediately; it could damage components in the engine compartment.

If Honda MTF is not available, you may use an SAE 10W-30 or 10W-40 viscosity motor oil with the API Certification seal that says “FOR GASOLINE ENGINES” as a temporary replacement. However, motor oil does not contain the proper additives, and continued use can cause stiffer shifting. Replace as soon as it is convenient.

The transmission should be drained and refilled with new fluid according to the time and distance recommendations in the maintenance schedule.

If you are not sure how to check and add fluid, contact your Honda dealer.

Brake and Clutch Fluid

Check the fluid level in the reservoirs monthly. There are up to two reservoirs, depending on the model. They are:

- Brake fluid reservoir (all models)
- Clutch fluid reservoir (manual transmission only)

Replace the brake fluid according to the recommendation in the maintenance schedule.

Always use Honda Heavy Duty Brake Fluid DOT 3. If it is not available, you should use only DOT 3 or DOT 4 fluid, from a sealed container, as a temporary replacement.

Using any non-Honda brake fluid can cause corrosion and decrease the life of the system. Have the brake system flushed and refilled with Honda Heavy Duty Brake Fluid DOT 3 as soon as possible.

Brake fluid marked DOT 5 is not compatible with your vehicle's braking system and can cause extensive damage.

Brake System

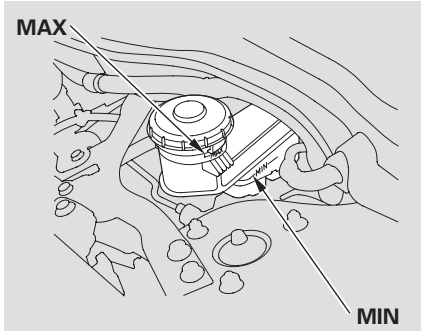

The fluid level should be between the MIN and MAX marks on the side of the reservoir. If the level is at or below the MIN mark, your brake system needs attention. Have the brake system inspected for leaks or worn brake pads.

Clutch System

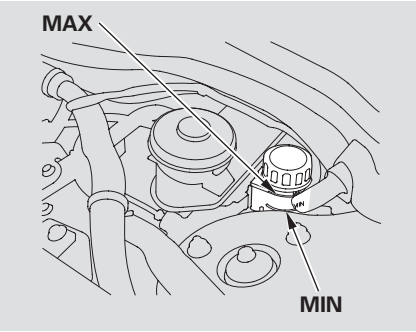

The fluid level should be between the MIN and MAX marks on the side of the reservoir. If it is not, add brake fluid to bring it up to that level. Use the same fluid specified for the brake system.

Low fluid level can indicate a leak in the clutch system. Have this system inspected as soon as possible.

Power Steering Fluid

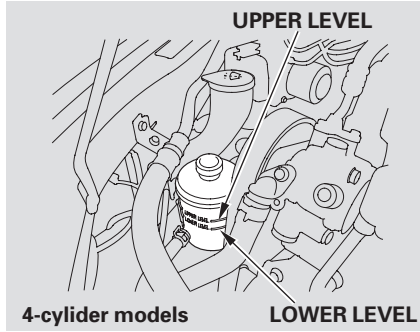

Check the level on the side of the reservoir when the engine is cold. The fluid should be between the UPPER LEVEL and LOWER LEVEL. If not, add power steering fluid to the UPPER LEVEL mark.

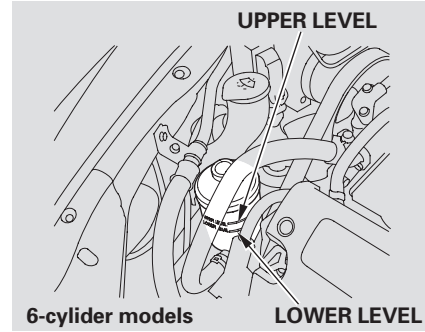

CONTINUED

Always use Honda Power Steering Fluid. You may use another power steering fluid as an emergency replacement, but have the power steering system flushed and refilled with Honda PSF as soon as possible.

A low power steering fluid level can indicate a leak in the system. Check the fluid level frequently, and have the system inspected as soon as possible.

NOTICE: *Turning the steering wheel to full left or right lock and holding it there can damage the power steering pump.*

Timing Belt

6-cylinder models only

The timing belt should be replaced at the intervals shown in the maintenance schedule.

Replace the belt at 60,000 miles (U.S.) or 100,000 km (Canada) if you regularly drive your vehicle in one or more of these conditions:

- In very high temperatures (over 110°F, 43°C).
- In very low temperatures (under −20°F, −29°C).

Hood Latch

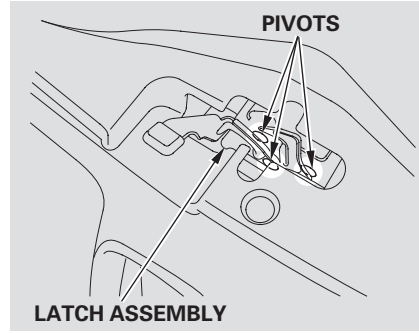

Clean the hood latch assembly with a mild cleaner, then lubricate it with a multipurpose grease. Lubricate all the moving parts (as shown), including the pivot. Follow the time and distance recommendations in the Maintenance Schedule. If you are not sure how to clean and grease the latch, contact your Honda dealer.

Headlight Aiming

The headlights were properly aimed when your vehicle was new. If you regularly carry heavy items in the trunk or pull a trailer, readjustment may be required. Adjustments should be performed by a Honda dealer or other qualified mechanic.

Replacing a Headlight Bulb

Your vehicle has two bulbs on each side, four in total. Make sure you are replacing the bulb that is burned out. Your vehicle uses halogen headlight bulbs. When replacing a bulb, handle it by its plastic case and protect the glass from contact with your skin or hard objects. If you touch the glass, clean it with denatured alcohol and a clean cloth.

NOTICE: *Halogen headlight bulbs get very hot when lit. Oil, perspiration, or a scratch on the glass can cause the bulb to overheat and shatter.*

High Beam Headlight

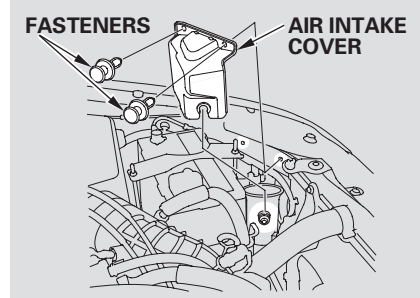

4-cylinder models

1. Open the hood. To change a bulb on the passenger's side, undo the two fasteners and remove the air intake cover.

CONTINUED

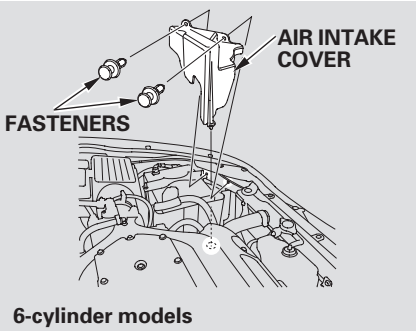

6-cylinder models

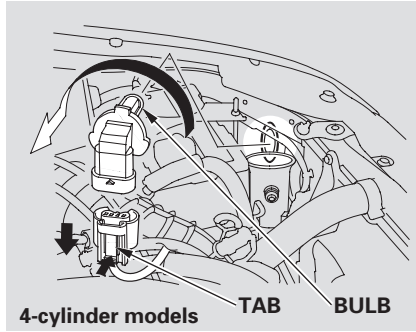

4-cylinder models

2. Remove the electrical connector from the bulb by squeezing the connector to unlock the tab, then slide the connector off the bulb.

3. Remove the bulb by turning it approximately one-quarter turn counterclockwise.

4. Install the new bulb and turn it one-quarter turn clockwise to lock it in place.

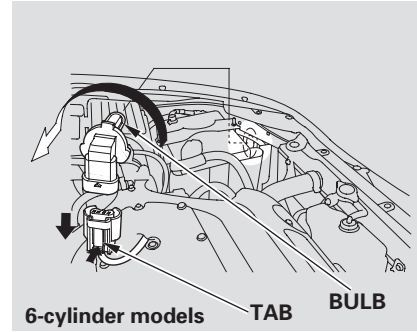

6-cylinder models

5. Push the electrical connector back onto the bulb. Make sure it is on all the way.

6. Turn on the headlights to test the new bulb.

7. (Passenger's side)
   Reinstall the air intake cover. Reinstall the two fasteners and secure them by pushing on the heads until they lock.

Low Beam Headlight

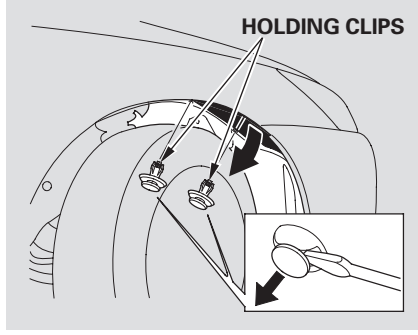

1. To change the passenger's side bulb, start the engine, turn the steering wheel all the way to the left, and turn off the engine. To change the driver's side bulb, turn the steering wheel to the right.

2. Use a flat-tipped screwdriver to remove the two holding clips from the inner fender.

3. Pull the inner fender cover away from the fender and bumper.

CONTINUED

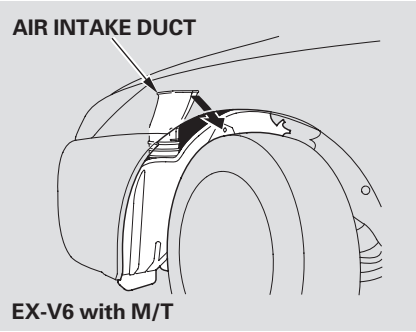

4. *On EX-V6 model with manual transmission*
   To change the low beam headlight bulb on the driver's side, remove the air intake duct. You can reach the air intake duct from the back side of the inner fender.

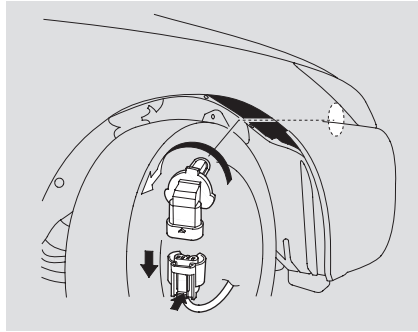

5. Remove the electrical connector from the bulb by squeezing the connector to unlock the tab, then slide the connector off the bulb.

6. Remove the bulb by turning it approximately one-quarter turn counterclockwise.

7. Install the new bulb and turn it one-quarter turn clockwise to lock it in place.

8. Push the electrical connector back onto the bulb. Make sure it is on all the way.

9. Turn on the headlights to test the new bulb.

10. *On EX-V6 model with manual transmission*
    Reinstall the air intake duct securely.

11. Put the inner fender cover in place. Install and lock each holding clip by pushing on the center.

Replacing a Front Turn Signal/ Parking/Side Marker Light Bulb

1. To change the passenger's side bulb, start the engine, turn the steering wheel all the way to the left, and turn off the engine. To change the driver's side bulb, turn the steering wheel to the right.

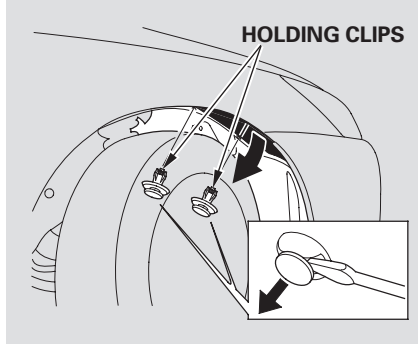

2. Use a flat-tipped screwdriver to remove the two holding clips from the inner fender.

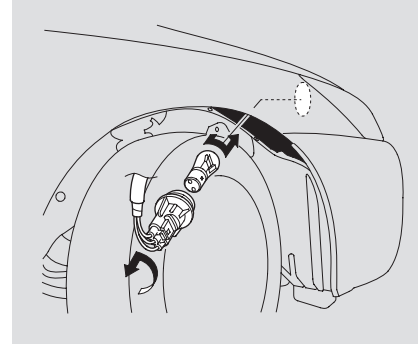

3. Pull the inner fender cover away from the fender and bumper.

4. Remove the socket from the headlight assembly by turning it one-quarter turn counterclockwise.

CONTINUED

5. Remove the burned out bulb from the socket by pushing it in and turning the bulb counterclockwise until it unlocks.

6. Install the new bulb in the socket. Turn it clockwise to lock it in place.

7. Insert the socket back into the headlight assembly. Turn it clockwise to lock it in place.

8. Turn on the lights to make sure the new bulb is working.

9. Put the inner fender cover in place. Install and lock each holding clip by pushing on the center.

Replacing Rear Bulbs

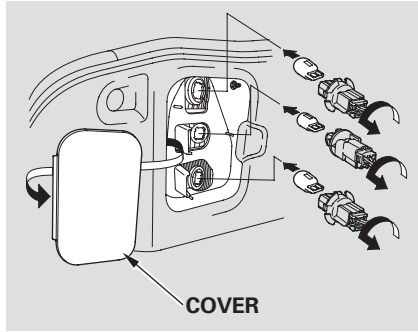

1. Open the trunk.

   Remove the light assembly cover by pulling its outside edge.

2. Determine which of the three bulbs is burned out: stop/taillight/side marker, back-up or turn signal.

3. Remove the socket by turning it one-quarter turn counterclockwise.

4. Pull the bulb straight out of its socket. Push the new bulb straight into the socket until it bottoms.

5. Reinstall the socket into the light assembly by turning it clockwise until it locks.

6. Turn on the lights to make sure the new bulb is working.

7. Install the light assembly cover. Make sure it snaps into place.

Replacing a High-mount Brake Light Bulb

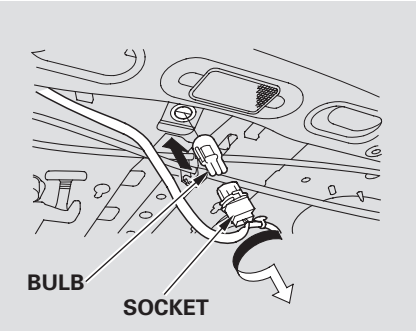

1. Open the trunk and remove the socket from the light assembly by turning it one-quarter turn counter-clockwise.

2. Remove the burned-out bulb by pulling it straight out of the socket. Install the new bulb into the socket.

3. Reinstall the socket. Turn it clockwise until it locks.

4. Turn on the lights to make sure the new bulb is working.

Seat Belts

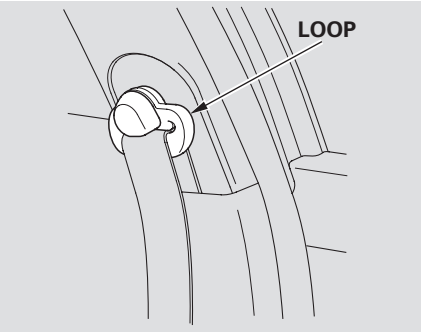

Clean dirty seat belts with a soft brush and a mixture of mild soap and warm water. Do not use bleach, dye, or cleaning solvents. They can weaken the belt material. Let the belts air dry before you use the vehicle.

Dirt build-up in the loops of the seat belt anchors can cause the belts to retract slowly. Wipe the insides of the loops with a clean cloth dampened in mild soap and warm water or isopropyl alcohol.

Floor Mats

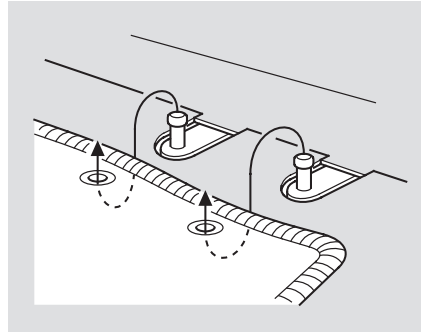

The driver's floor mat that came with your vehicle hooks over the floor mat anchors. This keeps the floor mat from sliding forward and possibly interfering with the pedals or making the front passenger's weight sensors ineffective.

If you remove the driver's floor mat, make sure to re-anchor it when you put it back in your vehicle.

If you use non-Honda floor mats, make sure they fit properly and that they can be used with the floor mat anchors. Do not put additional floor mats on top of the anchored mat.

Make sure the rear floor mat is properly hooked to the floor mat anchor. Your vehicle is equipped with front passenger's seat weight sensors. If the rear passenger's floor mat is on the seat rail of the front passenger's seat, the sensors will detect the decreased weight on the seat and they may not work properly.

Dust and Pollen Filter

This filter removes the dust and pollen that is brought in from the outside through the heating and cooling system/climate control system.

This filter should be replaced every 30,000 miles (48,000 km) under normal conditions. It should be replaced every 15,000 miles (24,000 km) if you drive primarily in urban areas that have high concentrations of soot in the air from industry and diesel-powered vehicles. Replace it more often if airflow from the heating and cooling system/climate control system becomes less than usual. Have the dust and pollen filter replaced by your Honda dealer.

Check the condition of the wiper blades at least every six months. Replace them if you find signs of cracking in the rubber, and areas that are getting hard, or if they leave streaks and unwiped areas when used.

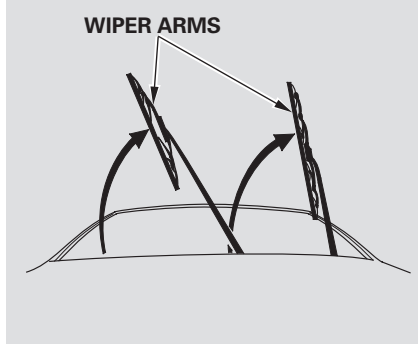

To replace a wiper blade:

1. Raise the wiper arm off the windshield. Raise the driver's side first, then the passenger's side.

NOTICE: *Do not open the hood when the wiper arms are raised, or you will damage the hood and the wiper arms.*

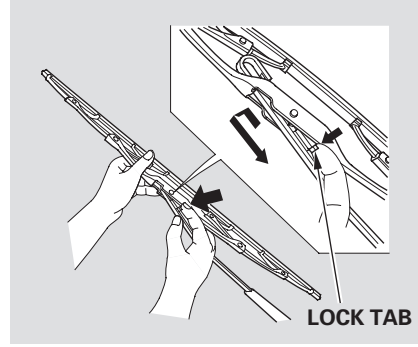

2. Disconnect the blade assembly from the wiper arm by pushing in the lock tab. Hold the lock tab in while you push the blade assembly toward the base of the arm.

CONTINUED

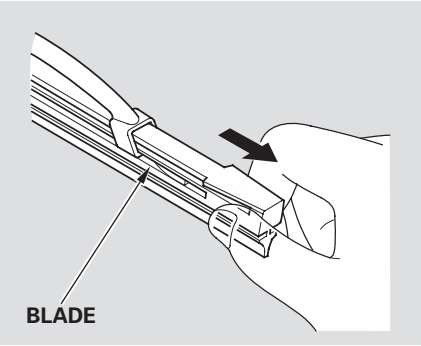

3. Remove the blade from its holder by grasping the tabbed end of the blade. Pull firmly until the tabs come out of the holder.

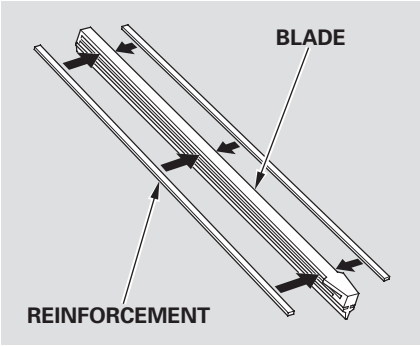

4. Examine the new wiper blades. If they have no plastic or metal reinforcement along the back edge, remove the metal reinforcement strips from the old wiper blade, and install them in the slots along the edge of the new blade.

5. Slide the new wiper blade into the holder until the tabs lock.

6. Slide the wiper blade assembly onto the wiper arm. Make sure it locks in place.

7. Lower the wiper arm down against the windshield. Lower the passenger's side first, then the driver's side.

To safely operate your vehicle, your tires must be the proper type and size, in good condition with adequate tread, and correctly inflated.

The following pages give more detailed information on how to take care of your tires and what to do when they need to be replaced.

⚠ WARNING

Using tires that are excessively worn or improperly inflated can cause a crash in which you can be seriously hurt or killed.

Follow all instructions in this owner's manual regarding tire inflation and maintenance.

Inflation

Keeping the tires properly inflated provides the best combination of handling, tread life, and riding comfort.

- Underinflated tires wear unevenly, adversely affect handling and fuel economy, and are more likely to fail from being overheated.
- Overinflated tires can make your vehicle ride more harshly, are more prone to damage from road hazards, and wear unevenly.

We recommend that you visually check your tires every day. If you think a tire might be low, check it immediately with a tire gauge.

Use a gauge to measure the air pressure at least once a month. Even tires that are in good condition may lose one to two psi (10 to 20 kPa, 0.1 to 0.2 kgf/cm²) per month. Remember to check the spare tire at the same time.

Check the pressure in the tires when they are cold. This means the vehicle has been parked for at least three hours, or driven less than 1 mile (1.6 km).

Add or release air, if needed, to match the recommended cold tire pressures on page 246 .

CONTINUED

If you check the pressure when the tires are hot [driven for several miles (kilometers)], you will see readings 4 to 6 psi (30 to 40 kPa, 0.3 to 0.4 kgf/cm²) higher than the cold reading. This is normal; do not release air to match the cold pressure.

Tubeless tires have some ability to self-seal if they are punctured. You should look closely for punctures if a tire starts losing pressure.

You should get your own tire pressure gauge and use it whenever you check your tire pressures. This will make it easier for you to tell if a pressure loss is due to a tire problem and not due to a variation between gauges.

All models except 4-cylinder LX

Tire Size	Cold Tire Pressure for Normal Driving
P205/60R16 91V *1 P215/50R17 93V *2	Front: 32 psi (220 kPa , 2.2 kgf/cm²) Rear: 30 psi (210 kPa , 2.1 kgf/cm²) *1 29 psi (200 kPa , 2.0 kgf/cm²) *2

*1 EX, LX-V6 and EX-V6 with A/T
*2 EX-V6 with M/T

4-cylinder LX model

Tire Size	Cold Tire Pressure for Normal Driving
P205/65R15 92H	Front: 30 psi (210 kPa , 2.1 kgf/cm²) Rear: 29 psi (200 kPa , 2.0 kgf/cm²)

All models
The compact spare tire pressure is:
60 psi (420 kPa , 4.2 kgf/cm²)

For convenience, the recommended tire sizes and cold air pressures are on a label on the driver's doorjamb.

For additional technical information, see page 290 .

Tire Inspection

Every time you check inflation, you should also examine the tires for damage, foreign objects, and wear. You should look for:

- Bumps or bulges in the tread or side of the tire. Replace the tire if you find either or these conditions.
- Cuts, splits, or cracks in the side of the tire. Replace the tire if you can see fabric or cord.
- Excessive tread wear.

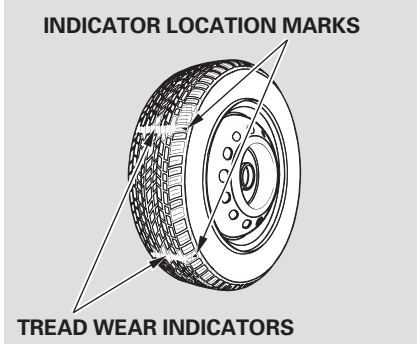

Your vehicle's tires have wear indicators molded into the tread. When the tread wears down to that point, you will see a 1/2 inch (12.7 mm) wide band running across the tread. This shows there is less than 1/16 inch (1.6 mm) of tread left on the tire. A tire that is this worn gives very little traction on wet roads. You should replace the tire if you can see the tread wear indicator in three or more places around the tire.

Tire Maintenance

In addition to proper inflation, correct wheel alignment helps to decrease tire wear. If you find a tire is worn unevenly, have your dealer check the wheel alignment.

Have your dealer check the tires if you feel a consistent vibration while driving. A tire should always be rebalanced if it is removed from the wheel. When you have new tires installed, make sure they are balanced. This increases riding comfort and tire life. For best results, have the installer perform a dynamic balance.

On EX and EX-V6 models

NOTICE: *Improper wheel weights can damage your vehicle's aluminum wheels. Use only Honda wheel weights for balancing.*

Tire Rotation

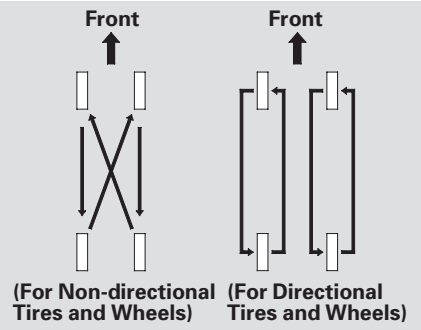

To help increase tire life and distribute wear more evenly, rotate the tires every 10,000 miles (16,000 km) on 4-cylinder models and 7,500 miles (12,000 km) on 6-cylinder models. Move the tires to the positions shown in the chart each time they are rotated. If you purchase directional tires, rotate only front-to-back.

Replacing Tires

Replace your tires with radial tires of the same size, load range, speed rating, and maximum cold tire pressure rating (as shown on the tire's sidewall). Mixing radial and bias-ply tires on your vehicle can reduce braking ability, traction, and steering accuracy. Using tires of a different size or construction can cause the ABS to work inconsistently.

The ABS works by comparing the speed of the wheels. When replacing tires, use the same size originally supplied with the vehicle. Tire size and construction can affect wheel speed and may cause the system to work.

It is best to replace all four tires at the same time. If that is not possible or necessary, replace the two front tires or two rear tires as a pair. Replacing just one tire can seriously affect your vehicle's handling.

If you ever replace a wheel, make sure that the wheel's specifications match those of the original wheels.

⚠ WARNING

Installing improper tires on your vehicle can affect handling and stability. This can cause a crash in which you can be seriously hurt or killed.

Always use the size and type of tires recommended in this owner's manual.

Wheels and Tires

Wheels:

LX model
15 x 6 1/2 JJ

EX, LX-V6 and EX-V6 with A/T models
16 x 6 1/2 JJ

EX-V6 with M/T model
17 x 7 JJ

Tires:

LX model
P205/65R15 92H

EX, LX-V6 and EX-V6 with A/T models
P205/60R16 91V

EX-V6 with M/T model
P215/50R17 93V

See page 288 for DOT tire quality grading information, and page 290 for tire size explanation.

Replacement wheels are available at your Honda dealer.

Winter Driving

Tires marked “M + S” or “All Season” on the sidewall have an all-weather tread design suitable for most winter driving conditions.

For the best performance in snowy or icy conditions, you should install snow tires or tire chains. They may be required by local laws under certain conditions.

Snow Tires

If you mount snow tires on your Honda, make sure they are radial tires of the same size and load range as original tires. Mount snow tires on all four wheels. The traction provided by snow tires on dry roads may be lower than your original tires. Check with the tire dealer for maximum speed recommendations.

Tire Chains

Mount snow chains on your tires when required by driving conditions or local laws. Install them only on the front tires.

Because your vehicle has limited tire clearance, Honda strongly recommends using the chains listed, made by Security Chain Company (SCC).

LX
Link-type: SCC Quick Grip QG1134
Cable-types: SCC Radial Chain CH2311T or SCC SC Cable SC1030

EX, LX-V6 and EX-V6 with automatic transmission
Cable-types: SCC Radial Chain CH2311T or SCC SC Cable SC1030

EX-V6 with manual transmission
CH2412T

These chains are the only ones that have been approved by Honda for use on your vehicle. Since Honda cannot test all chains, you must be personally responsible for proper selection, installation, and use of snow chains.

The chains listed here are available at many auto supply stores. For a complete list of stores, visit the SCC website at www.scc-chain.com. When installing chains, follow the manufacturer's instructions, and mount them as tightly as you can. Drive slowly with chains installed.

⚠ WARNING

Using the wrong chains, or not properly installing chains, can damage the brake lines and cause a crash in which you can be seriously injured or killed.

Follow all instructions in this owner's manual regarding the selection and use of tire chains.

If you ever hear the chains contacting the body or chassis, stop and investigate. If the chains have loosened, retighten them. Make sure they do not contact the brake lines or suspension.

Remove the chains as soon as you begin driving on cleared roads.

NOTICE: *Traction devices that are the wrong size or improperly installed can damage your vehicle's brake lines, suspension, body, and wheels. Stop driving if they are hitting any part of the vehicle.*

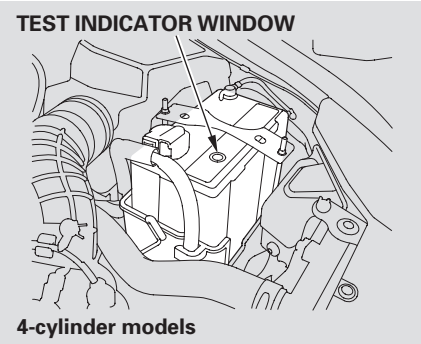

4-cylinder models

Check the condition of the battery monthly by looking at the test indicator window. The label on the battery explains the test indicator's colors.

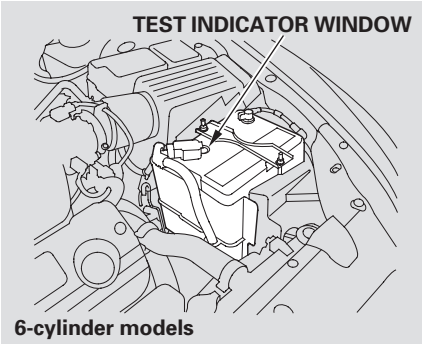

6-cylinder models

Check the terminals for corrosion (a white or yellowish powder). To remove it, cover the terminals with a solution of baking soda and water. It will bubble up and turn brown. When this stops, wash it off with plain water. Dry off the battery with a cloth or paper towel. Coat the terminals with grease to help prevent future corrosion.

If additional battery maintenance is needed, see your Honda dealer or a qualified technician.

WARNING: Battery posts, terminals, and related accessories contain lead and lead compounds. **Wash your hands after handling.**

If you need to connect the battery to a charger, disconnect both cables to prevent damaging your vehicle's electrical system. Always disconnect the negative (−) cable first, and reconnect it last.

⚠ WARNING

The battery gives off explosive hydrogen gas during normal operation.

A spark or flame can cause the battery to explode with enough force to kill or seriously hurt you.

Wear protective clothing and a face shield, or have a skilled mechanic do the battery maintenance.

Vehicle Storage

If you need to park your vehicle for an extended period (more than one month), there are several things you should do to prepare it for storage. Proper preparation helps prevent deterioration and makes it easier to get your vehicle back on the road. If possible, store your vehicle indoors.

- Fill the fuel tank.
- Change the engine oil and filter.
- Wash and dry the exterior completely.
- Clean the interior. Make sure the carpeting, floor mats, etc. are completely dry.
- Leave the parking brake off. Put the transmission in Reverse (manual) or Park (automatic).
- Block the rear wheels.
- If the vehicle is to be stored for a longer period, it should be supported on jackstands so the tires are off the ground.
- Leave one window open slightly (if the vehicle is being stored indoors).
- Disconnect the battery.
- Support the front wiper blade arms with a folded towel or rag so they do not touch the windshield.
- To minimize sticking, apply a silicone spray lubricant to all door and trunk seals. Also, apply a vehicle body wax to the painted surfaces that mate with the door and trunk seals.
- Cover the vehicle with a "breathable" cover, one made from a porous material such as cotton. Non-porous materials, such as plastic sheeting, trap moisture, which can damage the paint.
- If possible, periodically run the engine until it reaches full operating temperature (the cooling fans cycle on and off twice). Preferably, do this once a month.

If you store your vehicle for 1 year or longer, have your Honda dealer perform the inspections as soon as you take it out of storage (see pages 205 and 210). The 6-cylinder model needs the inspections called for in the 2 years/30,000 miles (48,000 km) maintenance schedule (Normal Conditions) and the 4-cylinder model needs the inspections called for in the 2 years/40,000 miles (64,000 km) maintenance schedule (Normal Conditions). The replacements called for in the maintenance schedule are not needed unless the vehicle has actually reached that time or mileage.

This section covers the more common problems that motorists experience with their vehicles. It gives you information about how to safely evaluate the problem and what to do to correct it. If the problem has stranded you on the side of the road, you may be able to get going again. If not, you will also find instructions on getting your vehicle towed.

Compact Spare Tire..... 256
Changing a Flat Tire 257
If the Engine Won't Start..... 262
Jump Starting 264
If the Engine Overheats 266
Low Oil Pressure Indicator 268
Charging System Indicator..... 269
Malfunction Indicator Lamp 269
Brake System Indicator 271
Emergency Towing 272
Closing the Moonroof 274
Fuses 275
Fuse Locations..... 278

Compact Spare Tire

Use the compact spare tire as a temporary replacement only. Get your regular tire repaired or replaced and put it back on your vehicle as soon as you can.

Check the compact spare tire inflation pressure every time you check the other tires. It should be inflated to:
60 psi (420 kPa , 4.2 kgf/cm^2)

Follow these precautions:

- Never exceed 50 mph (80 km/h) under any circumstances.
- This tire gives a harsher ride and less traction on some road surfaces. Use greater caution while driving.
- Do not mount snow chains on it.
- Do not use the compact spare tire if you are towing a trailer.
- Do not use your compact spare tire on another vehicle unless it is the same make and model.
- *On all V6 models*
  Turn off the Traction Control System (see page 192). Driving with the compact spare tire may activate the TCS.

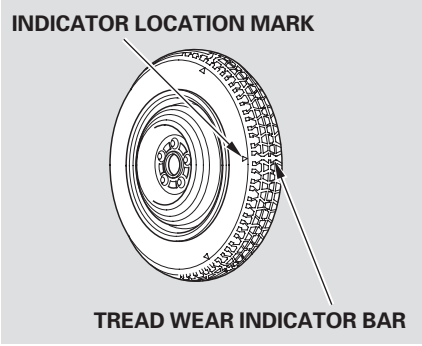

Replace the tire when you can see the tread wear indicator bars. The replacement should be the same size and design tire, mounted on the same wheel. The spare tire is not designed to be mounted on a regular wheel, and the spare wheel is not designed for mounting a regular tire.

If you have a flat tire while driving, stop in a safe place to change it. Drive slowly along the shoulder until you get to an exit or an area that is far away from the traffic lanes.

⚠ WARNING

The vehicle can easily roll off the jack, seriously injuring anyone underneath.

Follow the directions for changing a tire exactly, and never get under the vehicle when it is supported only by the jack.

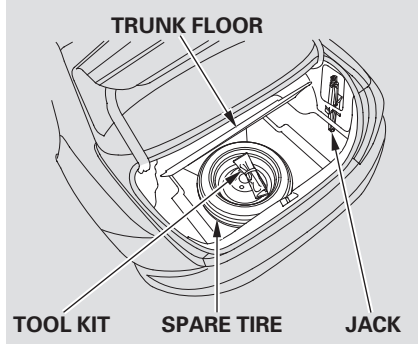

1. Park the vehicle on firm, level and non-slippery ground. Put the transmission in Park (automatic) or Reverse (manual). Apply the parking brake.
   If you are towing a trailer, unhitch the trailer.

2. Turn on the hazard warning indicators, and turn the ignition switch to LOCK (0). Have all the passengers get out of the vehicle while you change the tire.

3. The tools are in the trunk. Open the trunk and raise the trunk floor by lifting up on the back edge.

4. Take the tool kit out of the trunk.

5. Unscrew the wing bolt and take the spare tire out of its well.

CONTINUED

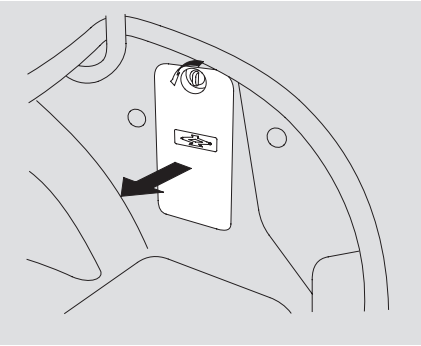

6. The jack is behind a cover in the right fender. Remove the cover by turning the handle counterclockwise, then pulling on the cover.

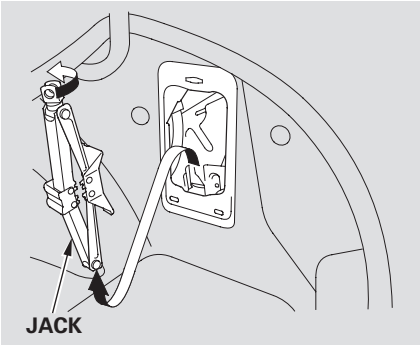

7. Turn the jack's end bracket counterclockwise to loosen it, then remove the jack.

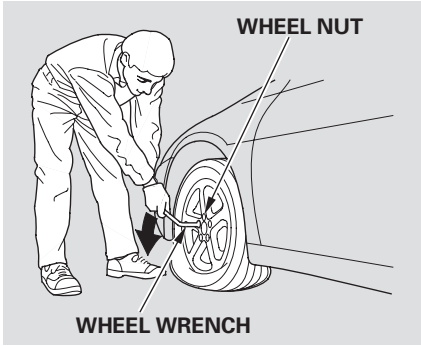

8. Loosen each wheel nut 1/2 turn with the wheel wrench.

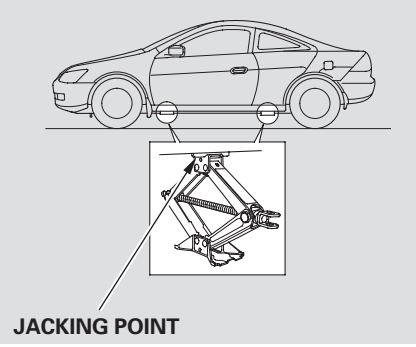

9. Place the jack under the jacking point nearest the tire you need to change. Turn the end bracket clockwise until the top of the jack contacts the jacking point. Make sure the jacking point tab is resting in the jack notch.

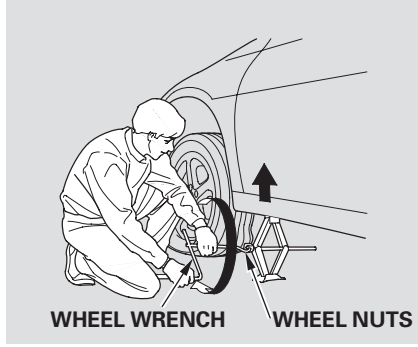

10. Use the extension and wheel wrench as shown to raise the vehicle until the flat tire is off the ground.

11. Remove the wheel nuts, then remove the flat tire. Handle the wheel nuts carefully; they may be hot from driving. Place the flat tire on the ground with the outside surface facing up.

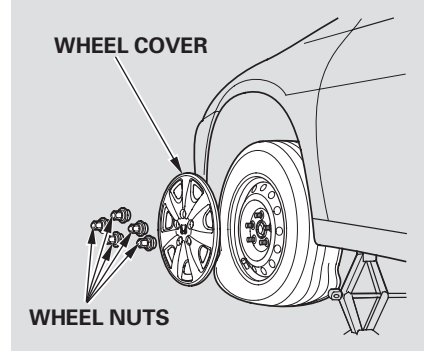

On LX and LX-V6 models
Do not attempt to forcibly pry the wheel cover off with a screwdriver or other tool. The wheel cover cannot be removed without first removing the wheel nuts.

CONTINUED

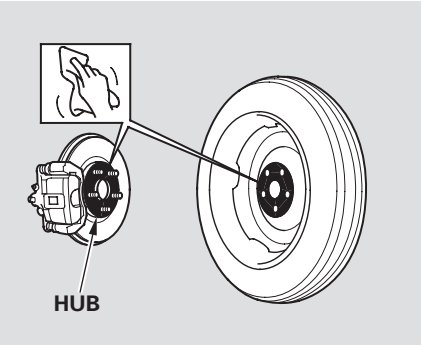

12. Before mounting the spare tire, wipe any dirt off the mounting surface of the wheel and hub with a clean cloth. Wipe the hub carefully; it may be hot from driving.

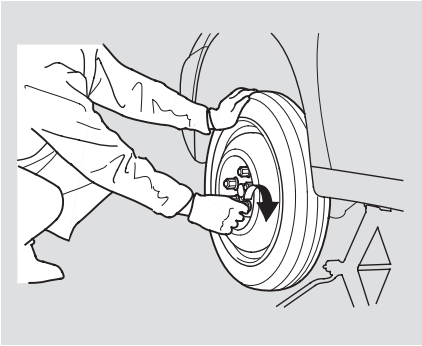

13. Put on the spare tire. Put the wheel nuts back on finger-tight, then tighten them in a crisscross pattern with the wheel wrench until the wheel is firmly against the hub. Do not try to tighten them fully.

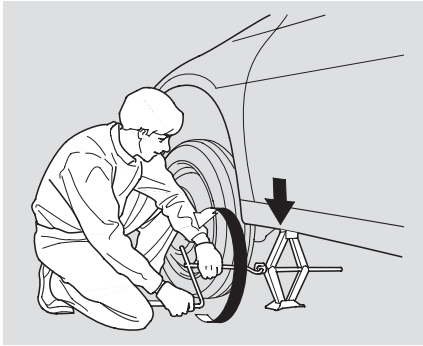

14. Lower the vehicle to the ground and remove the jack.

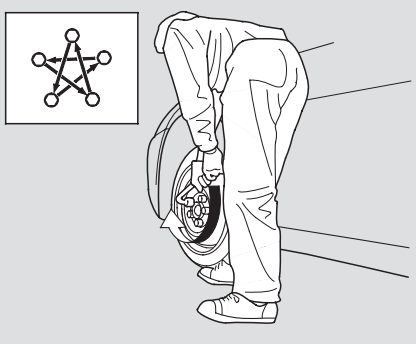

15. Tighten the wheel nuts securely in the same crisscross pattern. Have the wheel nut torque checked at the nearest automotive service facility.
    Tighten the wheel nuts to:
    80 lbf·ft (108 N·m , 11 kgf·m)

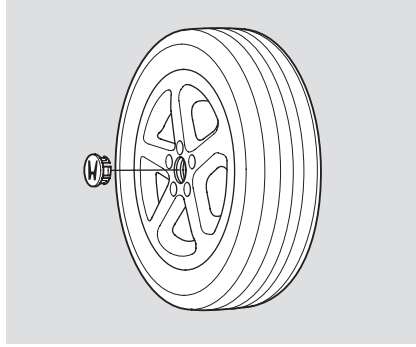

16. *EX and EX-V6 models*
    Remove the center cap before storing the flat tire in the trunk well.

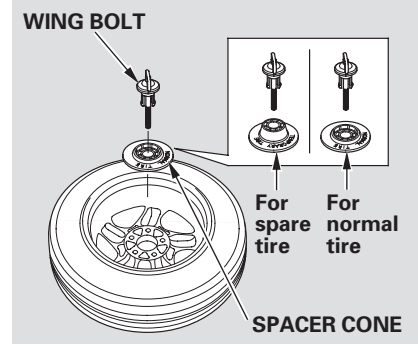

17. Place the flat tire face down in the spare tire well.

18. Remove the spacer cone from the wing bolt, turn it over, and put it back on the bolt.

19. Secure the flat tire by screwing the wing bolt back into its hole.

CONTINUED

20. Store the jack in its holder. Turn the jack's end bracket to lock it in place. Replace the cover. Store the tools.

⚠ WARNING

Loose items can fly around the interior in a crash and could seriously injure the occupants.

Store the wheel, jack, and tools securely before driving.

21. Store the wheel cover or center cap in the trunk. Make sure it does not get scratched or damaged.

22. Lower the trunk floor, then close the trunk lid.

If the Engine Won't Start

Diagnosing why your engine won't start falls into two areas, depending on what you hear when you turn the key to START (III):

- You hear nothing, or almost nothing. The engine's starter motor does not operate at all, or operates very slowly.
- You can hear the starter motor operating normally, or the starter motor sounds like it is spinning faster than normal, but the engine does not start up and run.

Nothing Happens or the Starter Motor Operates Very Slowly

When you turn the ignition switch to START (III), you do not hear the normal noise of the engine trying to start. You may hear a clicking sound or series of clicks, or nothing at all. Check these things:

- Check the transmission interlock. If you have a manual transmission, the clutch pedal must be pushed all the way to the floor or the starter will not operate. With an automatic transmission, it must be in Park or Neutral.
- Turn the ignition switch to ON (II). Turn on the headlights and check their brightness. If the headlights are very dim or don't light at all, the battery is discharged. See **Jump Starting** on page 264 .
- Turn the ignition switch to START (III). If the headlights do not dim, check the condition of the fuses. If the fuses are OK, there is probably something wrong with the electrical circuit for the ignition switch or starter motor. You will need a qualified technician to determine the problem (see **Emergency Towing** on page 272).

If the headlights dim noticeably or go out when you try to start the engine, either the battery is discharged or the connections are corroded. Check the condition of the battery and terminal connections (see page 252). You can then try jump starting the vehicle from a booster battery (see page 264).

The Starter Operates Normally
In this case, the starter motor's speed sounds normal, or even faster than normal, when you turn the ignition switch to START (III), but the engine does not run.

- Are you using the proper starting procedure? Refer to **Starting the Engine** on page 179 .
- Are you using a properly coded key? An improperly coded key will cause the immobilizer system indicator in the instrument panel to blink rapidly (see page 76).
- Do you have fuel? Check the fuel gauge; the low fuel indicator may not be working.
- There may be an electrical problem, such as no power to the fuel pump. Check all the fuses (see page 275).

If you find nothing wrong, you will need a qualified technician to find the problem. See **Emergency Towing** on page 272 .

Although this seems like a simple procedure, you should take several precautions.

⚠ WARNING

A battery can explode if you do not follow the correct procedure, seriously injuring anyone nearby.

Keep all sparks, open flames, and smoking materials away from the battery.

You cannot start a Honda with an automatic transmission by pushing or pulling it.

To Jump Start Your Vehicle:

1. Open the hood and check the physical condition of the battery. In very cold weather, check the condition of the electrolyte. If it seems slushy or like ice, do not try jump starting until it thaws.

NOTICE: *If a battery sits in extreme cold, the electrolyte inside can freeze. Attempting to jump start with a frozen battery can cause it to rupture.*

2. Turn off all the electrical accessories: heater, A/C, climate control, stereo system, lights, etc. Put the transmission in Neutral or Park, and set the parking brake.

3. Connect one jumper cable to the positive (+) terminal on your Honda's battery. Connect the other end to the positive (+) terminal on the booster battery.

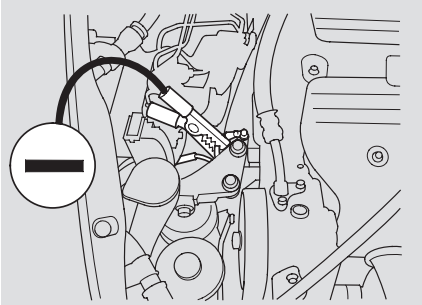

4-cylinder models

4. Connect the second jumper cable to the negative (−) terminal on the booster battery. Connect the other end to the grounding strap as shown. Do not connect this jumper cable to any other part of the engine.

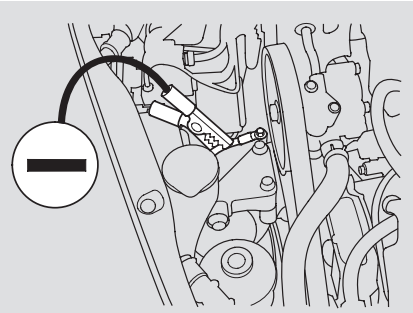

6-cylinder models

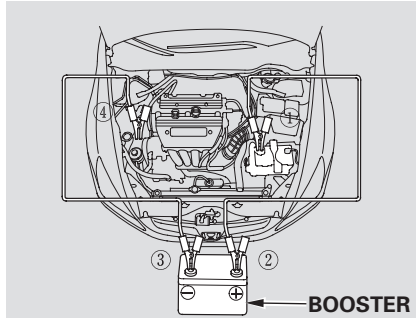

4-cylinder models

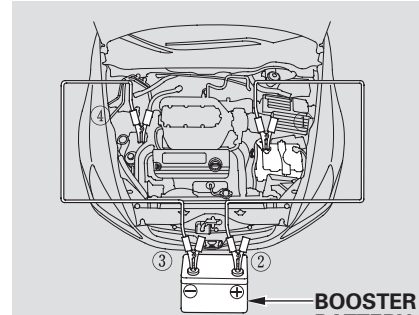

6-cylinder models

The numbers in the illustrations show you the order to connect the jumper cables.

5. If the booster battery is in another vehicle, have an assistant start that vehicle and run it at a fast idle.

6. Start your vehicle. If the starter motor still operates slowly, check that the jumper cables have good metal-to-metal contact.

7. Once your vehicle is running, disconnect the negative cable from your vehicle, then from the booster battery. Disconnect the positive cable from your vehicle, and then from the booster battery.

   Keep the ends of the jumper cables away from each other and any metal on the vehicle until everything is disconnected. Otherwise, you may cause an electrical short.

If the Engine Overheats

The pointer of your vehicle's temperature gauge should stay in the midrange. If it climbs to the red mark, you should determine the reason (hot day, driving up a steep hill, etc.).

If your vehicle overheats, you should take immediate action. The only indication may be the temperature gauge climbing to or above the red mark. Or you may see steam or spray coming from under the hood.

NOTICE: *Driving with the temperature gauge pointer at the red mark can cause serious damage to your engine.*

⚠ WARNING

Steam and spray from an overheated engine can seriously scald you.

Do not open the hood if steam is coming out.

1. Safely pull to the side of the road. Put the transmission in Neutral or Park, and set the parking brake. Turn off all accessories, and turn on the hazard warning indicators.

2. If you see steam and/or spray coming from under the hood, turn off the engine. Wait until you see no more signs of steam or spray, then open the hood.

3. If you do not see steam or spray, leave the engine running and watch the temperature gauge. If the high heat is due to overloading, the engine should start to cool down almost immediately. If it does, wait until the temperature gauge comes down to the midpoint, then continue driving.

4. If the temperature gauge stays at the red mark, turn off the engine.

5. Look for any obvious coolant leaks, such as a split radiator hose. Everything is still extremely hot, so use caution. If you find a leak, it must be repaired before you continue driving (see **Emergency Towing** on page 272).

6. If you don't find an obvious leak, check the coolant level in the radiator reserve tank. Add coolant if the level is below the MIN mark.

7. If there was no coolant in the reserve tank, you may need to add coolant to the radiator. Let the engine cool down until the pointer reaches the middle of the temperature gauge, or lower, before checking the radiator.

⚠ WARNING

Removing the radiator cap while the engine is hot can cause the coolant to spray out, seriously scalding you.

Always let the engine and radiator cool down before removing the radiator cap.

8. Using gloves or large heavy cloth, turn the radiator cap counterclockwise without pushing down to the first stop. After the pressure releases, push down on the cap, and turn it until it comes off.

9. Start the engine and set the temperature control dial to maximum (climate control to AUTO at " H, "). Add coolant to the radiator up to the base of the filler neck. If you do not have the proper coolant mixture available, you can add plain water. Remember to have the cooling system drained and refilled with the proper mixture as soon as you can.

10. Put the radiator cap back on tightly. Run the engine and watch the temperature gauge. If it goes back to the red mark, the engine needs repair (see **Emergency Towing** on page 272).

11. If the temperature stays normal, check the coolant level in the radiator reserve tank. If it has gone down, add coolant to the MAX mark. Put the cap back on tightly.

Low Oil Pressure Indicator

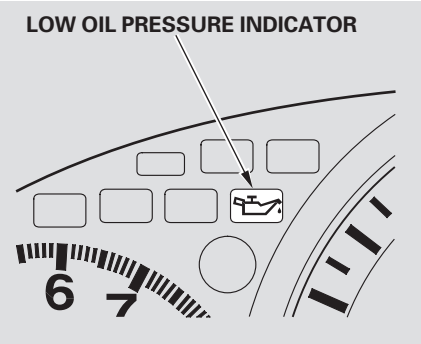

This indicator should never come on when the engine is running. If it starts flashing or stays on, the oil pressure has dropped very low or lost pressure. Serious engine damage is possible and you should take immediate action.

NOTICE: *Running the engine with low oil pressure can cause serious mechanical damage almost immediately. Turn off the engine as soon as you can safely get the vehicle stopped.*

1. Safely pull off the road, and shut off the engine. Turn on the hazard warning indicators.

2. Let the vehicle sit for a minute. Open the hood, and check the oil level (see page 168). An engine very low on oil can lose pressure during cornering and other driving maneuvers.

3. If necessary, add oil to bring the level back to the full mark on the dipstick (see page 217).

4. Start the engine, and watch the oil pressure indicator. If it does not go out within 10 seconds, turn off the engine. There is a mechanical problem that needs to be repaired before you can continue driving (see **Emergency Towing** on page 272).

Charging System Indicator

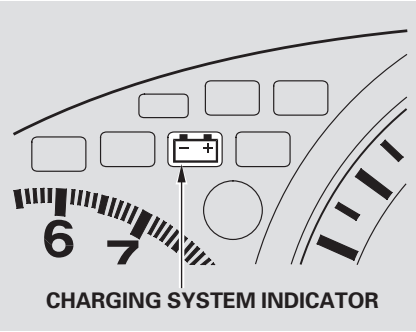

If the charging system indicator comes on brightly when the engine is running, the battery is not being charged.

Immediately turn off all electrical accessories. Try not to use other electrically operated controls such as the power windows. Keep the engine running; starting the engine will discharge the battery rapidly.

Go to a Honda dealer or a service station where you can get technical assistance.

Malfunction Indicator Lamp

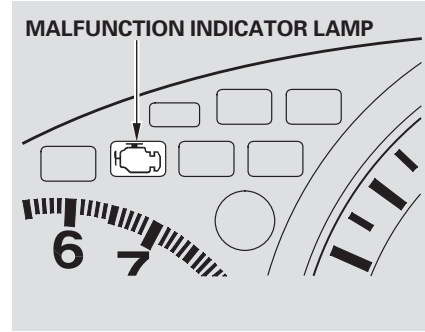

If the indicator comes on while driving, it means one of the engine's emissions control systems may have a problem. Even though you may feel no difference in your vehicle's performance, it can reduce your fuel economy and cause increased emissions. Continued operation may cause serious damage.

CONTINUED

If you have recently refueled your vehicle, the indicator could come on because of a loose or missing fuel fill cap. Tighten the cap until it clicks at least three times. Tightening the cap will not turn the indicator turn off immediately; it takes at least three days of normal driving.

If the indicator remains on, or the fuel cap was not loose or missing, have your vehicle checked by the dealer as soon as possible.

NOTICE: *If you keep driving with the Malfunction Indicator Lamp on, you can damage your vehicle's emissions controls and the engine. Those repairs may not be covered by your vehicle's warranties.*

This indicator may also come on along with the "D" indicator.

Readiness Codes
Your vehicle has certain "readiness codes" that are part of the on-board diagnostics for the emissions systems. In some states, part of the emissions testing is to make sure these codes are set. If they are not set, the test cannot be completed.

If your vehicle battery has been disconnected or gone dead, these codes are erased. It takes at least three days of driving under various conditions to set the codes again.

To check if they are set, turn the ignition switch to ON (II), without starting the engine. The Malfunction Indicator Lamp will come on for 20 seconds. If it then goes off, the readiness codes are set. If it blinks 5 times, the readiness codes are not set. If possible, do not take your vehicle for a state emissions test until the readiness codes are set. Refer to State Emissions Testing for more information (see page 296).

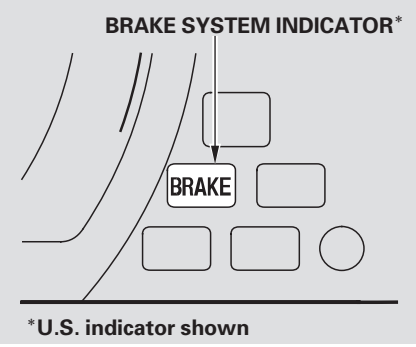

The brake system indicator normally comes on when you turn the ignition switch to ON (II) and as a reminder to check the parking brake. It will stay lit if you do not fully release the parking brake.

If the brake system indicator comes on while driving, the brake fluid level is probably low. Press lightly on the brake pedal to see if it feels normal. If it does, check the brake fluid level the next time you stop at a service station (see page 230).

If the fluid level is low, take your vehicle to the dealer and have the brake system inspected for leaks or worn brake pads.

However, if the brake pedal does not feel normal, you should take immediate action. A problem in one part of the system's dual circuit design will still give you braking at two wheels. You will feel the brake pedal go down much farther before the vehicle begins to slow down and you will have to press harder on the pedal.

Slow down by shifting to a lower gear, and pull to the side of the road when it is safe. Because of the long distance needed to stop, it is hazardous to drive the vehicle. You should have it towed and repaired as soon as possible (see **Emergency Towing** on page 272).

If you must drive the vehicle a short distance in this condition, drive slowly and carefully.

If the ABS indicator comes on with the brake system indicator, have the vehicle inspected by your Honda dealer immediately.

Emergency Towing

If your vehicle needs to be towed, call a professional towing service or organization. Never tow your vehicle with just a rope or chain. It is very dangerous.

There are three popular types of professional towing equipment.

Flat-bed Equipment — The operator loads your vehicle on the back of a truck. **This is the best way to transport your Honda.**

Wheel-lift Equipment — The tow truck uses two pivoting arms that go under the tires (front or rear) and lift them off the ground. The other two tires remain on the ground. **This is an acceptable way to tow your Honda.**

Sling-type Equipment — The tow truck uses metal cables with hooks on the ends. These hooks go around parts of the frame or suspension and the cables lift that end of the vehicle off the ground. Your vehicle's suspension and body can be seriously damaged. **This method of towing is unacceptable.**

If your Honda cannot be transported by flat-bed, it should be towed by wheel-lift equipment with the front wheels off the ground. If, due to damage, your vehicle must be towed with the front wheels on the ground, do the following:

Manual Transmission:
- Release the parking brake.
- Shift the transmission to Neutral.

Automatic Transmission:
- Release the parking brake.
- Start the engine.
- Shift to D, then to N.
- Turn off the engine.

NOTICE: *Improper towing preparation will damage the transmission. Follow the above procedure exactly. If you cannot shift the transmission or start the engine (automatic transmission), your vehicle must be transported with the front wheels off the ground.*

With the front wheels on the ground, it is best to tow the vehicle no farther than 50 miles (80 km), and keep the speed below 35 mph (55 km/h).

If your vehicle is equipped with a front spoiler, remove it before towing so it is not damaged.

If you decide to tow your vehicle with all four wheels on the ground, make sure you use a properly-designed and attached tow bar. Prepare the vehicle for towing as described above, and leave the ignition switch in Accessory (I) so the steering wheel does not lock. Make sure the radio and any items plugged into the accessory power socket are turned off so they do not run down the battery.

NOTICE: *The steering system can be damaged if the steering wheel is locked. Leave the ignition switch in Accessory (I), and make sure the steering wheel turns freely before you begin towing.*

NOTICE: *Trying to lift or tow your vehicle by the bumpers will cause serious damage. The bumpers are not designed to support the vehicle's weight.*

Closing the Moonroof

On EX and EX-V6 models
If the electric motor will not close the moonroof, do the following:

1. Check the fuse for the moonroof motor (see page 279). If the fuse is blown, replace it with one of the same or lower rating.

2. Try closing the moonroof. If the new fuse blows immediately or the moonroof motor still does not operate, you can close the moonroof manually.

3. Get the moonroof wrench out of the tool kit in the trunk.

4. To remove the round plug in the center of the headliner, turn the plug by using a screwdriver or coin, then pry it out. Make sure to align the tabs on the round plug to the notches on the ceilling as shown in the illustration.

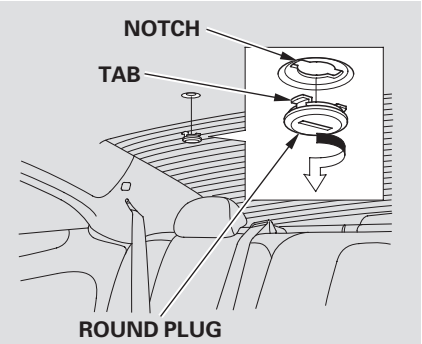

5. Insert the moonroof wrench securely into the socket behind this plug. Hold the longer handle as shown and turn the wrench slowly until the moonroof is fully closed.

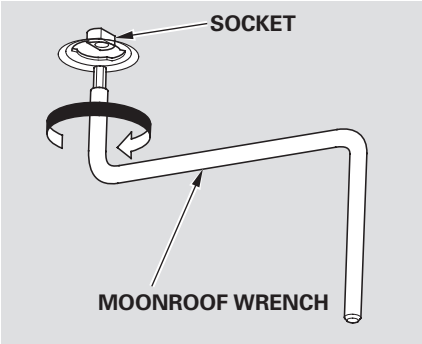

6. Remove the wrench. Reinstall the round plug.

If you need to close the moonroof manually, it means your vehicle's moonroof opening/closing function is developing a problem. Have your vehicle checked by a Honda dealer.

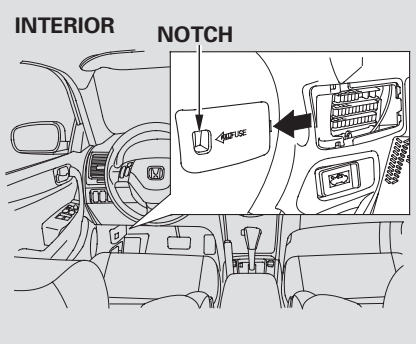

The vehicle's fuses are located in two fuse boxes.

The interior fuse box is on the driver's lower left side. To remove the fuse box lid, put your finger in the notch on the lid, and pull it upward slightly, then pull it toward you and take it out of its hinges.

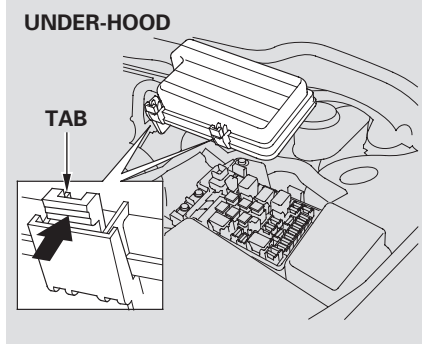

The under-hood fuse box is located on the driver's side. To open it, push the tabs as shown.

Checking and Replacing Fuses

If something electrical in your vehicle stops working, the first thing you should check for is a blown fuse. Determine from the chart on pages 278 and 279 , or the diagram on the fuse box lid, which fuse or fuses control that device. Check those fuses first, but check all the fuses before deciding that a blown fuse is the cause. Replace any blown fuses, and check if the device works.

1. Turn the ignition switch to LOCK (0). Make sure the headlights and all other accessories are off.

2. Remove the cover from the fuse box.

CONTINUED

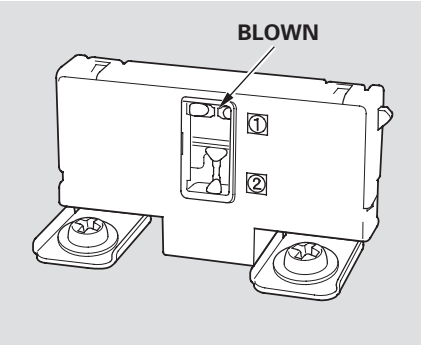

3. Check each of the large fuses in the under-hood fuse box by looking through the side window at the wire inside. Remove the screws with a Phillips-head screwdriver.

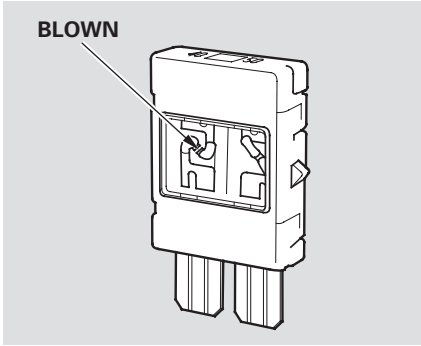

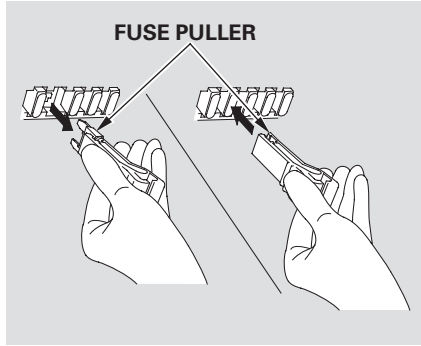

4. Check the smaller fuses in the under-hood fuse box and all the fuses in the interior fuse box by pulling out each fuse with the fuse puller provided in the under-hood fuse box.

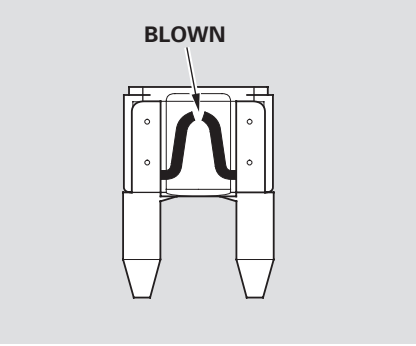

5. Look for a burned wire inside the fuse. If it is burned, replace it with one of the spare fuses of the same rating or lower.

If you cannot drive the vehicle without fixing the problem, and you do not have a spare fuse, take a fuse of the same rating or a lower rating from one of the other circuits with the fuse puller provided in the under-hood fuse box. Make sure you can do without that circuit temporarily (such as the accessory power socket or radio).

If you replace the blown fuse with a spare fuse that has a lower rating, it might blow out again. This does not indicate anything wrong. Replace the fuse with one of the correct rating as soon as you can.

NOTICE: *Replacing a fuse with one that has a higher rating greatly increases the chances of damaging the electrical system. If you do not have a replacement fuse with the proper rating for the circuit, install one with a lower rating.*

6. If the replacement fuse of the same rating blows in a short time, there is probably a serious electrical problem in your vehicle. Leave the blown fuse in that circuit, and have your vehicle checked by a qualified mechanic.

UNDER-HOOD FUSE/RELAY BOX

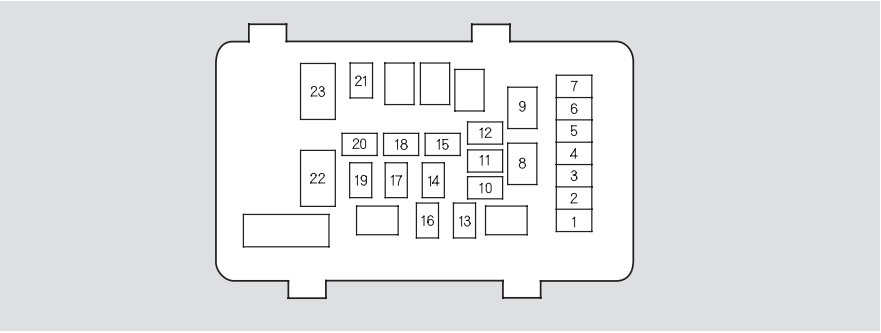

No.	Amps.	Circuits Protected
1	10 A	Left Headlight Low Beam
2	(30A)	(Rear Defroster Coil)
3	10 A	Left Headlight High Beam
4	15 A	Small Light
5	10 A	Right Headlight High Beam

No.	Amps.	Circuits Protected
6	10 A	Right Headlight Low Beam
7	7.5 A	Back Up
8	15 A	FI ECU
9	20 A	Condenser fan
10	—	Not Used

No.	Amps.	Circuits Protected
11	20 A	Cooling Fan
11*	30 A	Cooling Fan
12	7.5 A	MG. Clutch
13	20 A	Horn, Stop
14	40 A	Rear Defroster
15	40 A	Back Up, ACC
16	15 A	Hazard
17	30 A	ABS Motor
17*	30 A	TCS Motor
18	20 A	ABS F/S
18*	40 A	TCS
19	40 A	Option
20	(40 A)	Option
21	40 A	Heater Motor
22	100 A	Battery
	—	Not Used
23	50 A	+B IG1 Main
	50 A	Power Window Main

* : 6-cylinder models

INTERIOR FUSE BOX

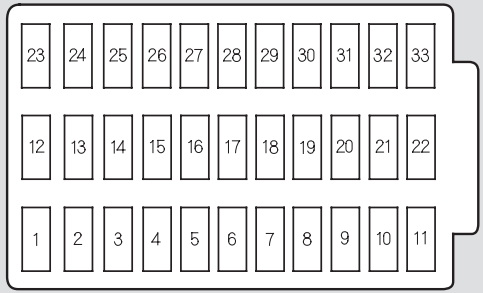

No.	Amps.	Circuits Protected
1	(15 A)	DBW
2	15 A	Ignition Coil
3	(10 A)	Daytime Running Light*
4	15 A	Laf Heater
5	10 A	Radio
6	7.5 A	Interior Light
7	10 A	Back-Up Lights

No.	Amps.	Circuits Protected
8	20 A	Door Lock
9	15 A	Front Accessory Sockets
10	7.5 A	IG OPDS (Occupant Position Detection System)
11	30 A	IG Wiper
12	—	Not Used
13	—	Not Used

No.	Amps.	Circuits Protected
14	(20 A)	Driver's Power Seat Sliding
15	(20 A)	Heated Seats
16	(20 A)	Driver's Power Seat Reclining
17	—	Not Used
18	15 A	IG ACG
19	15 A	IG Fuel Pump
20	7.5 A	IG Washer
21	7.5 A	IG Meter
22	10 A	IG SRS
23	7.5 A	IGP (PGM-FI ECU)
24	—	Not Used
25	—	Not Used
26	20 A	Passenger's Power Window
27	20 A	Driver's Power Window
28	(20 A)	Moonroof
29	—	Not Used
30	7.5 A	IG HAC
31	—	Not Used
32	7.5 A	ACC
33	7.5 A	HAC OP

* : On Canadian models

Technical Information

The diagrams in this section give you the dimensions and capacities of your Honda, and the locations of the identification numbers. It also includes information you should know about your vehicle's tires and emissions control systems.

Identification Numbers 282
Specifications
(4-cylinder Models) 284
Specifications
(6-cylinder Models) 286
DOT Tire Quality Grading
(U. S. Vehicles) 288
Treadwear 288
Traction..... 288
Temperature 289
Tire Labeling..... 290
Oxygenated Fuels..... 291
Driving in Foreign Countries 292
Emissions Controls..... 293
The Clean Air Act..... 293
Crankcase Emissions Control
System..... 293
Evaporative Emissions Control
System..... 293
Onboard Refueling Vapor
Recovery 293
Exhaust Emissions Controls 294
PGM-FI System 294
Ignition Timing Control
System..... 294
Exhaust Gas Recirculation
(EGR) System..... 294
Three Way Catalytic
Converter..... 294
Replacement Parts..... 294
Three Way Catalytic Converter... 295
State Emissions Testing 296
Testing of Readiness Codes..... 296

Identification Numbers

Your vehicle has several identifying numbers in various places.

The Vehicle Identification Number (VIN) is the 17-digit number your Honda dealer uses to register your vehicle for warranty purposes. It is also necessary for licensing and insuring your vehicle. The easiest place to find the VIN is on a plate fastened to the top of the dashboard. You can see it by looking through the windshield on the driver's side. It is also on the Certification label attached to the driver's doorjamb, and is stamped on the engine compartment bulkhead. The VIN is also provided in bar code on the Certification label.

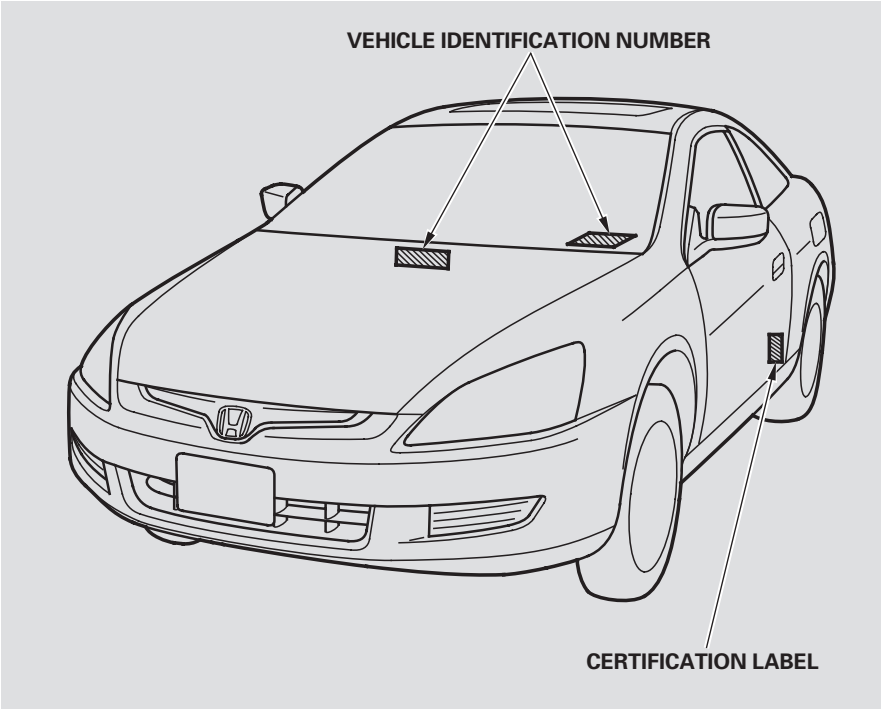

The Engine Number is stamped into the engine block. It is on the front.

The Transmission Number is on a label on top of the transmission.

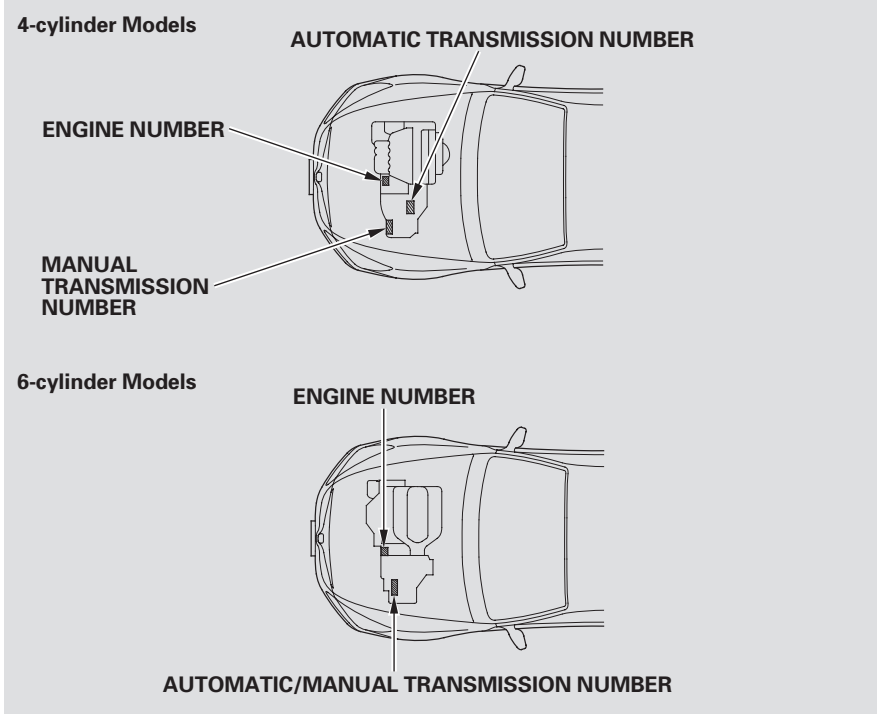

Specifications (4-cylinder Models)

Dimensions

Length		187.6 in (4,766 mm)
Width		71.3 in (1,810 mm)
Height		55.7 in (1,415 mm)
Wheelbase		105.1 in (2,670 mm)
Track	Front	61.1 in (1,553 mm)
	Rear	61.2 in (1,554 mm)

Weights

Gross vehicle weight rating	See the certification label attached to the driver's doorjamb.

Air Conditioning

Refrigerant type	HFC-134a (R-134a)
Charge quantity	17.6－19.4 oz (500－550 g)
Lubricant type	ND-OIL8

Capacities

Fuel tank		Approx. 17.09 US gal (64.7 ℓ)
Engine coolant	Change*1	
	Manual	1.40 US gal (5.3 ℓ)
	Automatic	1.37 US gal (5.2 ℓ)
	Total	
	Manual	1.90 US gal (7.2 ℓ)
	Automatic	1.88 US gal (7.1 ℓ)
Engine oil	Change*2	
	Including filter	4.4 US qt (4.2 ℓ)
	Without filter	4.2 US qt (4.0 ℓ)
	Total	5.6 US qt (5.3 ℓ)
Manual transmission fluid	Change	2.0 US qt (1.9 ℓ)
	Total	2.2 US qt (2.1 ℓ)
Automatic transmission fluid	Change	3.0 US qt (2.8 ℓ)
	Total	6.9 US qt (6.5 ℓ)
Windshield washer reservoir	U.S. Vehicles	2.6 US qt (2.5 ℓ)
	Canada Vehicles	4.8 US qt (4.5 ℓ)

*1 : Including the coolant in the reserve tank and that remaining in the engine.
Reserve tank capacity:
0.16 US gal (0.6 ℓ)

*2 : Excluding the oil remaining in the engine.

Lights

Headlights	High	12 V — 60 W (HB3)
	Low	12 V — 51 W (HB4)
Front turn signal/parking/side marker lights		12 V — 24/2.2 CP
Rear turn signal lights		12 V — 21 W
Stop/taillight/side marker lights		12 V — 21/5 W
Back-up lights		12 V — 18 W
License plate lights		12 V — 3 CP
Ceiling light		12 V — 8 W
High-mount brake light		12 V — 21 W
Trunk light		12 V — 5 W
Door courtesy lights		12 V — 2 CP
Vanity mirror lights		12 V — 1.1 W
Spotlights		12 V — 8 W

Battery

Capacity	12 V — 38 AH/5 HR 12 V — 47 AH/20 HR

Fuses

Interior	See page 279 or the fuse label attached to the inside of the fuse box lid.
Under-hood	See page 278 or the fuse box cover.

Engine

Type	Water cooled 4-stroke i-VTEC 4-cylinder gasoline engine
Bore x Stroke	3.43 x 3.90 in (87.0 x 99.0 mm)
Displacement	144 cu-in (2,354 cm^3)
Compression ratio	9.7 : 1
Spark plugs	NGK: IZFR6K-11 DENSO: SKJ20DR-M11

Alignment

Toe-in	Front	0.00 in (0.0 mm)
	Rear	0.08 in (2.0 mm)
Camber	Front	0°
	Rear	—1°
Caster	Front	3°15′

Tires

Size	Front/Rear	P205/65R15 92H *1 P205/60R16 91V *2
	Spare	T135/90D15 100M
Pressure	Front	30 psi (210 kPa , 2.1 kgf/cm^2)*1 32 psi (220 kPa , 2.2 kgf/cm^2)*2
	Rear	29 psi (200 kPa , 2.0 kgf/cm^2)*1 30 psi (210 kPa , 2.1 kgf/cm^2)*2
	Spare	60 psi (420 kPa , 4.2 kgf/cm^2)

*1 : LX
*2 : EX

Specifications (6-cylinder Models)

Dimensions

Length		187.6 in (4,766 mm)
Width		71.3 in (1,810 mm)
Height		55.7 in (1,415 mm)
Wheelbase		105.1 in (2,670 mm)
Track	Front	61.1 in (1,553 mm)
	Rear	61.2 in (1,554 mm)

Weights

Gross vehicle weight rating	See the certification label attached to the driver's doorjamb.

Air Conditioning

Refrigerant type	HFC-134a (R-134a)
Charge quantity	17.6－19.4 oz (500－550 g)
Lubricant type	ND-OIL8

Capacities

Fuel tank		Approx. 17.09 US gal (64.7 ℓ)
Engine coolant	Change*1	
	Manual	1.74 US gal (6.6 ℓ)
	Automatic	1.77 US gal (6.7 ℓ)
	Total	
	Manual	2.17 US gal (8.2 ℓ)
	Automatic	2.22 US gal (8.4 ℓ)
Engine oil	Change*2	
	Including filter	4.5 US qt (4.3 ℓ)
	Without filter	4.2 US qt (4.0 ℓ)
	Total	5.3 US qt (5.0 ℓ)
Manual transmission fluid	Change	2.3 US qt (2.2 ℓ)
	Total	2.6 US qt (2.5 ℓ)
Automatic transmission fluid	Change	3.1 US qt (2.9 ℓ)
	Total	7.6 US qt (7.2 ℓ)
Windshield washer reservoir	U.S. Vehicles	2.6 US qt (2.5 ℓ)
	Canada Vehicles	4.8 US qt (4.5 ℓ)

*1 : Including the coolant in the reserve tank and that remaining in the engine.
Reserve tank capacity:
0.16 US gal (0.6 ℓ)

*2 : Excluding the oil remaining in the engine.

Lights

Headlights	High	12 V — 63 W (HB3)
	Low	12 V — 51 W (HB4)
Front turn signal/parking/side marker lights		12 V — 24/2.2 CP
Rear turn signal lights		12 V — 21 W
Stop/taillight/side marker lights		12 V — 21/5 W
Back-up lights		12 V — 18 W
License plate lights		12 V — 3 CP
Ceiling light		12 V — 8 W
High-mount brake light		12 V — 21 W
Trunk light		12 V — 5 W
Door courtesy lights		12 V — 2 CP
Vanity mirror lights		12 V — 1.1 W
Spotlights		12 V — 8 W

Battery

Capacity	12 V — 52 AH/5 HR 12 V — 65 AH/20 HR

Fuses

Interior	See page 279 or the fuse label attached to the inside of the fuse box lid.
Under-hood	See page 278 or the fuse box cover.

Engine

Type	Water cooled 4-stroke SOHC VTEC 6-cylinder gasoline engine
Bore x Stroke	3.39 x 3.39 in (86.0 x 86.0 mm)
Displacement	183 cu-in (2,997 cm^3)
Compression ratio	10.0 : 1
Spark plugs	NGK: IZFR6K-11 DENSO: SKJ20DR-M11

Alignment

Toe-in	Front	0.00 in (0.0 mm)
	Rear	0.08 in (2.0 mm)
Camber	Front	0°
	Rear	—1°
Caster	Front	3°15′

Tires

Size	Front/Rear	P205/60R16 91V *1 P215/50R17 93V *2
	Spare	T135/90D15 100M *1 T135/80R16 101M *2
Pressure	Front	32 psi (220 kPa , 2.2 kgf/cm^2)
	Rear	30 psi (210 kPa , 2.1 kgf/cm^2) *1 29 psi (200 kPa , 2.0 kgf/cm^2) *2
	Spare	60 psi (420 kPa , 4.2 kgf/cm^2)

*1 : LX-V6, EX-V6 with automatic transmission
*2 : EX-V6 with manual transmission

DOT Tire Quality Grading (U.S. Vehicles)

The tires on your vehicle meet all U.S. Federal Safety Requirements. All tires are also graded for treadwear, traction, and temperature performance according to Department of Transportation (DOT) standards. The following explains these gradings.

Uniform Tire Quality Grading
Quality grades can be found where applicable on the tire sidewall between the tread shoulder and the maximum section width. For example:

Treadwear 200
Traction AA
Temperature A

All passenger car tires must conform to Federal Safety Requirements in addition to these grades.

Treadwear
The treadwear grade is a comparative rating based on the wear rate of the tire when tested under controlled conditions on a specified government test course. For example, a tire graded 150 would wear one and one-half (1 1/2) times as well on the government course as a tire graded 100. The relative performance of tires depends upon the actual conditions of their use, however, and may depart significantly from the norm due to variations in driving habits, service practices and differences in road characteristics and climate.

Traction – AA, A, B, C
The traction grades, from highest to lowest, are AA, A, B, and C. Those grades represent the tire's ability to stop on wet pavement as measured under controlled conditions on specified government test surfaces of asphalt and concrete. A tire marked C may have poor traction performance.

Warning: The traction grade assigned to this tire is based on straight-ahead braking traction tests, and does not include acceleration, cornering, hydroplaning, or peak traction characteristics.

Temperature – A, B, C
The temperature grades are A (the highest), B, and C, representing the tire's resistance to the generation of heat and its ability to dissipate heat when tested under controlled conditions on a specified indoor laboratory test wheel. Sustained high temperature can cause the material of the tire to degenerate and reduce tire life, and excessive temperature can lead to sudden tire failure. The grade C corresponds to a level of performance which all passenger car tires must meet under the Federal Motor Vehicle Safety Standard No. 109. Grades B and A represent higher levels of performance on the laboratory test wheel than the minimum required by law.

Warning: The temperature grade for this tire is established for a tire that is properly inflated and not overloaded. Excessive speed, underinflation, or excessive loading, either separately or in combination, can cause heat buildup and possible tire failure.

Tire Labeling

The tires that came on your vehicle have a number of markings. Those you should be aware of are described below.

Tire Size
Whenever tires are replaced, they should be replaced with tires of the same size. Following is an example of tire size with an explanation of what each component means.

P205/60R16 91V

P — Vehicle type (P indicates passenger vehicle).

205 — Tire width in millimeters.

60 — Aspect ratio (the tire's section height as a percentage of its width).

R — Tire construction code (R indicates radial).

16 — Rim diameter in inches.

91 — Load index (a numerical code associated with the maximum load the tire can carry).

V — Speed symbol (an alphabetical code indicating the maximum speed rating).

Tire Identification Number
Tire Identification Number (TIN) is a group of numbers and letters that look like the following example TIN.

DOT B97R FW6X 2202

DOT — This indicates that the tire meets all requirements of the U.S. Department of Transportation.

B97R — Manufacturer's identification mark.

FW6X — Tire type code.

2202 — Date of manufacture.

Some conventional gasolines are being blended with alcohol or an ether compound. These gasolines are collectively referred to as oxygenated fuels. To meet clean air standards, some areas of the United States and Canada use oxygenated fuels to help reduce emissions.

If you use an oxygenated fuel, be sure it is unleaded and meets the minimum octane rating requirement.

Before using an oxygenated fuel, try to confirm the fuel's contents. Some states/provinces require this information to be posted on the pump.

The following are the U.S. EPA and Canadian CGSB approved percentages of oxygenates:

ETHANOL (ethyl or grain alcohol)
You may use gasoline containing up to 10 percent ethanol by volume. Gasoline containing ethanol may be marketed under the name "Gasohol."

MTBE (Methyl Tertiary Butyl Ether)
You may use gasoline containing up to 15 percent MTBE by volume.

METHANOL (methyl or wood alcohol)
Your vehicle was not designed to use fuel that contains methanol. Methanol can corrode metal parts in the fuel system, and also damage plastic and rubber components. This damage would not be covered by your warranties.

If you notice any undesirable operating symptoms, try another service station or switch to another brand of gasoline.

Fuel system damage or performance problems resulting from the use of an oxygenated fuel containing more than the percentages of oxygenates given above are not covered under warranty.

Driving in Foreign Countries

If you are planning to take your Honda outside the U.S. or Canada, contact the tourist bureaus in the areas you will be traveling in to find out about the availability of unleaded gasoline with the proper octane rating.

If unleaded gasoline is not available, be aware that using leaded gasoline in your Honda will affect performance and fuel mileage, and damage its emissions controls. It will no longer comply with U.S. and Canadian emissions regulations, and will be illegal to operate in North America. To bring your vehicle back into compliance will require the replacement of several components, such as the oxygen sensors and the three way catalytic converter. These replacements are not covered under warranty.

The burning of gasoline in your vehicle's engine produces several by-products. Some of these are carbon monoxide (CO), oxides of nitrogen (NOx) and hydrocarbons (HC). Gasoline evaporating from the tank also produces hydrocarbons. Controlling the production of NOx, CO, and HC is important to the environment. Under certain conditions of sunlight and climate, NOx and HC react to form photochemical "smog." Carbon monoxide does not contribute to smog creation, but it is a poisonous gas.

The Clean Air Act

The United States Clean Air Act* sets standards for automobile emissions. It also requires that automobile manufacturers explain to owners how their emissions controls work and what to do to maintain them. This section summarizes how the emissions controls work. Scheduled maintenance is on pages 205 and 210 .

* In Canada, Honda vehicles comply with the Canadian emission requirements, as specified in an agreement with Environment Canada, at the time they are manufactured.

Crankcase Emissions Control System

Your vehicle has a Positive Crankcase Ventilation System. This keeps gasses that build up in the engine's crankcase from going into the atmosphere. The Positive Crankcase Ventilation valve routes them from the crankcase back to the intake manifold. They are then drawn into the engine and burned.

Evaporative Emissions Control System

As gasoline evaporates in the fuel tank, an evaporative emissions control canister filled with charcoal adsorbs the vapor. It is stored in this canister while the engine is off. After the engine is started and warmed up, the vapor is drawn into the engine and burned during driving.

Onboard Refueling Vapor Recovery

The Onboard Refueling Vapor Recovery (ORVR) system captures the fuel vapors during refueling. The vapors are adsorbed in a canister filled with activated carbon. While driving, the fuel vapors are drawn into the engine and burned off.

Exhaust Emissions Controls

The exhaust emissions controls include four systems: PGM-FI, Ignition Timing Control, Exhaust Gas Recirculation and Three Way Catalytic Converter. These four systems work together to control the engine's combustion and minimize the amount of HC, CO, and NOx that comes out the tailpipe. The exhaust emissions control systems are separate from the crankcase and evaporative emissions control systems.

PGM-FI System

The PGM-FI System uses sequential multiport fuel injection.
It has three subsystems: Air Intake, Engine Control, and Fuel Control. The Engine Control Module (ECM) or the Powertrain Control Module (PCM) uses various sensors to determine how much air is going into the engine. It then controls how much fuel to inject under all operating conditions.

Ignition Timing Control System

This system constantly adjusts the ignition timing, reducing the amount of HC, CO, and NOx produced.

Exhaust Gas Recirculation (EGR) System

The Exhaust Gas Recirculation (EGR) system takes some of the exhaust gas and routes it back into the intake manifold. Adding exhaust gas to the air/fuel mixture reduces the amount of NOx produced when the fuel is burned.

Three Way Catalytic Converter

The three way catalytic converter is in the exhaust system. Through chemical reactions, it converts HC, CO, and NOx in the engine's exhaust to carbon dioxide (CO_2), dinitrogen (N_2), and water vapor.

Replacement Parts

The emissions control systems are designed and certified to work together in reducing emissions to levels that comply with the Clean Air Act. To make sure the emissions remain low, you should use only new Honda replacement parts or their equivalent for repairs. Using lower quality parts may increase the emissions from your vehicle.

The emissions control systems are covered by warranties separate from the rest of your vehicle. Read your warranty manual for more information.

The three way catalytic converter contains precious metals that serve as catalysts, promoting chemical reactions to convert the exhaust gasses without affecting the metals. The catalytic converter is referred to as a three-way catalyst, since it acts on HC, CO, and NOx. A replacement unit must be an original Honda part or its equivalent.

The three way catalytic converter must operate at a high temperature for the chemical reactions to take place. It can set on fire any combustible materials that come near it. Park your vehicle away from high grass, dry leaves, or other flammables.

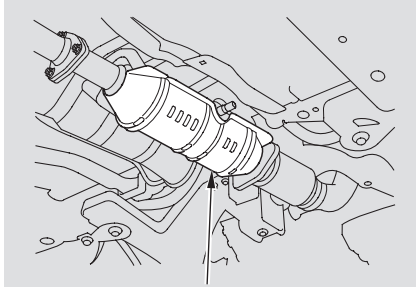

THREE WAY CATALYTIC CONVERTER
4-cylinder models

A defective three way catalytic converter contributes to air pollution, and can impair your engine's performance. Follow these guidelines to protect your vehicle's three way catalytic converter.

- Always use unleaded gasoline. Even a small amount of leaded gasoline can contaminate the catalyst metals, making the three way catalytic converter ineffective.

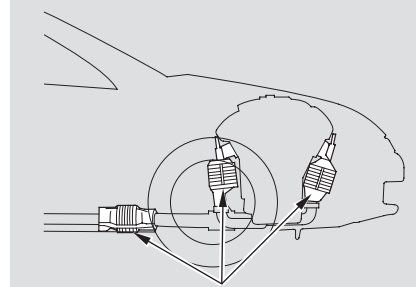

THREE WAY CATALYTIC CONVERTERS
6-cylinder models

- Keep the engine tuned-up.
- Have your vehicle diagnosed and repaired if it is misfiring, backfiring, stalling, or otherwise not running properly.

Testing of Readiness Codes
If you take your vehicle for a state emissions test shortly after the battery has been disconnected or gone dead, it may not pass the test. This is because of certain “readiness codes” that must be set in the on-board diagnostics for the emissions systems. These codes are erased when the battery is disconnected, and set again only after several days of driving under a variety of conditions.

If the testing facility determines that the readiness codes are not set, you will be requested to return at a later date to complete the test. If you must get the vehicle re-tested within the next two or three days, you can condition the vehicle for re-testing by doing the following.

- Make sure the gas tank is nearly, but not completely, full (around 3/4).
- Make sure the vehicle has been parked with the engine off for 8 hours or more.
- Make sure the ambient temperature is between 20° and 95°F.
- Without touching the accelerator pedal, start the engine, and let it idle for 20 seconds.
- Keep the vehicle in Park (automatic transmission) or Neutral (manual transmission). Increase the engine speed to 2,000 rpm and hold it there until the temperature gauge rises to at least 1/4 of the scale (approximately 3 minutes).

- Select a nearby lightly traveled major highway where you can maintain a speed of 50 to 60 mph (80 to 97 km/h) for at least 20 minutes. Drive on the highway in D (A/T) or 5th/6th (M/T). Do not use the cruise control. When traffic allows, drive for 90 seconds without moving the accelerator pedal. (Vehicle speed may vary slightly; this is okay.) If you cannot do this for a continuous 90 seconds because of traffic conditions, drive for at least 30 seconds, then repeat it two more times (for a total of 90 seconds).
- Then drive in city/suburban traffic for at least 10 minutes. When traffic conditions allow, let the vehicle coast for several seconds without using the accelerator pedal or the brake pedal.

If the testing facility determines the readiness codes are still not set, see your Honda dealer.

Warranty and Customer Relations

Customer Service Information 300
Warranty Coverages 301
Reporting Safety Defects (U.S. vehicles) 302
Authorized Manuals 303

Customer Service Information

Honda dealership personnel are trained professionals. They should be able to answer all your questions. If you encounter a problem that your dealership does not solve to your satisfaction, please discuss it with the dealership's management. The Service Manager or General Manager can help. Almost all problems are solved in this way.

If you are dissatisfied with the decision made by the dealership's management, contact your Honda Customer Service Office.

U.S. Owners:
American Honda Motor Co., Inc.
Automobile Customer Service
Mail Stop 500-2N-7A
1919 Torrance Boulevard
Torrance, California 90501-2746

Tel: (800) 999-1009

Canadian Owners:
CUSTOMER RELATIONS
RELATIONS AVEC LA CLIENTÉLE
Honda Canada Inc.
715 Milner Avenue
Toronto, ON
M1B 2K8

Tel: 1-888-9-HONDA-9
Fax: Toll-free 1-877-939-0909
Toronto (416) 287-4776

In Puerto Rico and the U.S. Virgin Islands:
Bella International
P.O. Box 190816
San Juan, Puerto Rico 00919-0816

Tel: (787) 250-4318

When you call or write, please give us this information:

- Vehicle Identification Number (see page 282)
- Name and address of the dealer who services your vehicle
- Date of purchase
- Mileage on your vehicle
- Your name, address, and telephone number
- A detailed description of the problem
- Name of the dealer who sold the vehicle to you

U.S. Owners

Your new Honda is covered by these warranties:

New Vehicle Limited Warranty — covers your new vehicle, except for the battery, emissions control systems, and accessories, against defects in materials and workmanship.

Emissions Control Systems Defects Warranty and Emissions Performance Warranty — these two warranties cover your vehicle's emissions control systems. Time, mileage, and coverage are conditional. Please read the warranty manual for exact information.

Original Equipment Battery Limited Warranty — this warranty gives up to 100 percent credit toward a replacement battery.

Seat Belt Limited Warranty — a seat belt that fails to function properly is covered for the useful life of the vehicle.

Rust Perforation Limited Warranty — all exterior body panels are covered for rust-through from the inside for the specified time period with no mileage limit.

Accessory Limited Warranty — Honda Accessories are covered under this warranty. Time and mileage limits depend on the type of accessory and other factors. Please read your warranty manual for details.

Replacement Parts Limited Warranty — covers all Honda replacement parts against defects in materials and workmanship.

Replacement Battery Limited Warranty — provides prorated coverage for a replacement battery purchased from a Honda dealer.

Replacement Muffler Lifetime Limited Warranty — provides coverage for as long as the purchaser of the muffler owns the vehicle.

Restrictions and exclusions apply to all these warranties. Please read the 2004 Honda Warranty Information booklet that came with your vehicle for precise information on warranty coverages. Your Honda's original tires are covered by their manufacturer. Tire warranty information is in a separate booklet.

Canadian Owners

Please refer to the 2004 Warranty Manual that came with your vehicle.

Reporting Safety Defects (U.S. Vehicles)

If you believe that your vehicle has a defect which could cause a crash or could cause injury or death, you should immediately inform the National Highway Traffic Safety Administration (NHTSA) in addition to notifying American Honda Motor Co., Inc.

If NHTSA receives similar complaints, it may open an investigation, and if it finds that a safety defect exists in a group of vehicles, it may order a recall and remedy campaign. However, NHTSA cannot become involved in individual problems between you, your dealer, or American Honda Motor Co., Inc.

To contact NHTSA, you may either call the Auto Safety Hotline toll-free at 1-800-424-9393 (or 366-0123 in Washington D.C. area) or write to: NHTSA, U.S. Department of Transportation, Washington, D.C. 20590. You can also obtain other information about motor vehicle safety from the Hotline.

Purchasing Factory Authorized Manuals (U.S. only)

The publications shown below can be purchased from Helm Incorporated. You can order in any of three ways:

- Detach and mail the order form on the right half of this page
- Call Helm Inc. at 1-800-782-4356 (credit card orders only)
- Go online at *www. helminc. com*

If you are interested in other years or models, contact Helm Inc. at 1-800-782-4356

Publication Form Number	Form Description	Price Each*
61SDA04	2003-2004 Honda Accord 2/4 Door L4 Service Manual Base Book	$70.00
61SDA05	2003-2004 Honda Accord 2/4 Door V6 Service Manual Supplement	$40.00
61SDA04EL	2003-2004 Honda Accord 2/4 Door L4/V6 Electrical Troubleshooting Manual	$50.00
61SDA30	2003-2004 Honda Accord 2/4 Door L4/V6 Body Repair Manual	$44.00
31SDN610	2004 Honda Accord 2 Door L4/V6 Owner's Manual	$34.00
31SDA710	2004 Honda Accord L4/V6 Navigation Manual	$29.00
31SDNQ10	2004 Honda Accord 2 Door L4/V6 Quick Start Guide	$12.00
HON-R	Order Form for Previous Years- Indicate Year and Model Desired	FREE

* Prices are subject to change without notice and without incurring obligation.

Valid only for sales within the U.S. Canadian owners should contact their authorized Honda dealer.

ORDER TOLL FREE: 1-800-782-4356

(NOTE: For Credit Card Holder Orders Only)

Monday-Friday 8:00 A.M. – 6:00 P.M. EST

MINIMUM CREDIT CARD PURCHASE $10.00

OR

By completing this form you can order the materials desired. You can pay by check or money order, or charge to your credit card. Mail to Helm Incorporated at the address shown on the back of the order form.

2004 HON	PUBLICATION NUMBER	VEHICLE MODEL		Qty	Price Each*	Total Price
		Name	Year			

* Prices are subject to change without notice and without incurring obligation.

Orders are mailed within 10 days. Please allow adequate time for delivery.

TOTAL MATERIAL	
Mich. Purchases Add 6% Sales Tax	
HANDLING CHARGE	$6.95
GRAND TOTAL	

SHIP TO

NOTE: Dealers and Companies please provide dealer or company name, and also the name of the person to whose attention the shipment should be sent. For purchases outside U.S.A. please write to the address shown below for a quotation.

Customer Name _____ Attention _____

Street Address — No P.O. Box Number _____ Apartment Number _____

City _____ State & Zip Code _____

Daytime Telephone Number ( ) _____

PAYMENT

☐ Check or money order enclosed payable to Helm Inc — U.S. funds only. Do not send cash

☐ Master Card ☐ VISA ☐ Check here if your billing address is different from the shipping address shown above.

Account Number _____ Expiration: Mo. Yr. _____

CUSTOMER SIGNATURE _____ DATE _____

These Publications cannot be returned for credit without receiving advance authorization within 14 days of delivery. On returns, a restocking fee may be applied against the original order.

HELM P.O. BOX 07280·DETROIT, MICHIGAN 48207·1-800-782-4356

Service Manual:
This manual covers maintenance and recommended procedures for repair to engine and chassis components. It is written for the journeyman mechanic, but is simple enough for most mechanically-inclined owners to understand.

Electrical Troubleshooting Manual:
This manual complements the Service Manual by providing in-depth troubleshooting information for each electrical circuit in your vehicle.

Body Repair Manual:
This manual describes the procedures involved in the replacement of damaged body parts.

A

Accessories..... 171
ACCESSORY (Ignition Key Position) 77
Accessory Power Sockets..... 103
Additives, Engine Oil..... 218
Airbag (SRS) 9, 21
Air Conditioning..... 108
  Usage 113, 115
Air Pressure, Tires 245, 246
Alcohol in Gasoline..... 164
Antifreeze 221
Anti-lock Brakes (ABS)
  Indicator..... 60, 189
  Operation 189
Anti-theft, Audio System..... 153
Anti-theft Steering Column Lock .. 77
Armrest 86
Audio System 120
Automatic Lighting Off Feature 71
Automatic Seat Belt Tensioners 19
Automatic Speed Control..... 156
Automatic Transmission..... 183
  Capacity, Fluid 284, 286
  Checking Fluid Level..... 225, 226
  Shifting..... 183
  Shift Lever Position Indicators..... 183
  Shift Lever Positions 184
  Shift Lock Release..... 186

B

Battery
  Charging System Indicator..... 58, 269
  Jump Starting 264
  Maintenance..... 252
  Specifications 285, 287
Before Driving 163
Belts, Seat 8, 18
Beverage Holders 99
Booster Seats 48
Brakes
  Anti-lock System (ABS) 189
  Break-in, New Linings 164
  Bulb Replacement 238
  Fluid 230
  Parking..... 97
  System Indicator..... 59, 271
  Wear Indicators 188
Braking System..... 188
Break-in, New Car 164
Brightness Control, Instruments... 72
Brights, Headlights 70
Bulb Replacement
  Back-up Lights 238
  Brake Lights..... 238
  Front Parking Lights..... 237
  Headlights 233
  High-mount Brake Light 239
  Specifications 285, 287
  Turn Signal Lights..... 237
Bulbs, Halogen..... 233

C

Capacities Chart 284, 286
Carbon Monoxide Hazard 51
Cargo, How to Carry 173
Cargo Net 176
CAUTION, Explanation of ii
CD Care 142
CD Changer..... 137
CD Changer Error Messages 144

CONTINUED

CD Error Messages 143
CD Player..... 134
CD Pocket, Center..... 100
Certification Label..... 282
Chains, Tires 250
Changing a Flat Tire 257
Changing Oil
How to 218
When to 205, 210
Charging System Indicator 58, 269
Checklist, Before Driving..... 178
Child Safety 32
Booster Seats 48
Child Seats..... 32, 39
Inportant Safety
Reminders 32, 36
Infants 37
Larger Children 47
LATCH..... 41
Risks with Airbags..... 33
Small Children..... 38
Tethers..... 45
Where Should a Child Sit?..... 33
Child Seats..... 39
LATCH..... 41
Tether Anchorage Points 45
Cleaning
Seat Belts..... 240
Climate Control System..... 115
Clock 154
Clutch Fluid..... 231
CO in the Exhaust 294
Coin Pocket 101
Cold Weather, Starting in..... 179
Compact Spare Tire..... 256
Console Compartment 100
Consumer Information*..... 300
Controls, Instruments and..... 55
Coolant
Adding..... 221
Checking..... 169
Proper Solution 221
Temperature Gauge..... 67
Crankcase Emissions Control
System..... 293
Cruise Control Indicator..... 63
Cruise Control Operation 156
Cup Holders..... 99
Customer Service Office 300

D

DANGER, Explanation of..... ii
Dashboard 2, 57
Daytime Running Lights..... 71
Daytime Running Lights
Indicator..... 63
Dead Battery 264
Defects, Reporting Safety..... 302
Defogger, Rear Window..... 73
Defrosting the
Windows 114
Dimensions..... 284, 286
Dimming the Headlights 70
Dipstick
Automatic Transmission .. 225, 226
Engine Oil..... 168
Directional Signals..... 70
Disc Brake Wear Indicators..... 188
Disposal of Used Oil..... 220
Doors
Locking and Unlocking..... 78
Power Door Locks..... 78
DOT Tire Quality Grading 288
Downshifting, Manual
Transmission..... 180

Driver and Passenger Safety..... 5
Driving 177
Economy 170
In Foreign Countries 292
Dual Temperature Control..... 117
Dust and Pollen Filter 242

E

Economy, Fuel 170
Emergencies..... 255
Battery, Jump Starting 264
Brake System Indicator 271
Changing a Flat Tire 257
Charging System Indicator 269
Checking the Fuses..... 275
Hazard Warning Flashers 72
Jump Starting 264
Low Oil Pressure Indicator 268
Malfunction Indicator Lamp 269
Manually Closing Moonroof 274
Overheated Engine 266
Towing 272
Emergency Brake..... 97
Emergency Flashers 72
Emergency Towing 272
Emergency Trunk Opener 82
Emissions Controls..... 293
Emissions Testing, State 296
Engine
Coolant Temperature Gauge 67
If It Won't Start 262
Malfunction Indicator Lamp 58, 269
Oil Pressure Indicator..... 58, 268
Oil, What Kind to Use 217
Overheating..... 266
Specifications 285, 287
Speed Limiter..... 182, 185
Starting..... 179
Engine Speed Limiter 182, 185
Ethanol in Gasoline 164
Evaporative Emissions Controls.. 293
Exhaust Fumes 51
Expectant Mothers, Use of Seat Belts by 16

F

Fan, Interior..... 110
Features, Comfort and Convenience 107
Filling the Fuel Tank..... 165
Filters
Dust and Pollen..... 242
Oil 218
5-speed Manual Transmission Checking Fluid Level 228
5-speed Manual Transmission Shifting the 180
Flashers, Hazard Warning..... 72
Flat Tire, Changing a 257
Fluids
Automatic Transmission .. 225, 226
Brake 230
Clutch 231
Manual Transmission 228
Power Steering..... 231
Windshield Washer 224
Folding Rear Seat 89
Foreign Countries, Driving in 292
Four-way Flashers 72
Front Airbags 9, 22
Front Seat 83, 85
Adjusting..... 83, 85
Heaters..... 90
Airbags..... 9, 22

CONTINUED

Fuel 164
Fill Door and Cap 165
Gauge 67
Octane Requirement 164
Oxygenated 164
Tank, Refueling 165
Fuses, Checking the 275

G

Gas Mileage, Improving 170
Gasohol 164
Gasoline 164
Gauge 67
Octane Requirement 164
Tank, Refueling 165
Gas Station Procedures 165
Gauges
Engine Coolant Temperature 67
Fuel 67
Gearshift Lever Positions
Automatic Transmission 183
5-speed Manual
Transmission 180
6-speed Manual
Transmission 180
Glove Box 99
Gross Vehicle Weight Rating
(GVWR) 195

H

Halogen Headlight Bulbs 233
Hazard Warning Flashers 72
Headlights 70
Aiming 233
Automatic Lighting Off 71
Daytime Running Lights 71
Low Beams, Turning on 70
Reminder Chime 70
Replacing Halogen Bulbs 233
Turning on 70
Head Restraints 88
Heating and Cooling 108
Heated Mirror 96
Heater, Seat 90
High Altitude, Starting at 179
HomeLink Universal
Transceiver 159
Hood Latch 232
Hood, Opening the 166
Hydraulic Clutch 231

I

Identification Number, Vehicle 282
Ignition
Keys 75
Switch 77
Timing Control System 294
Immobilizer System 76
Important Safety Precautions 6
Indicators 58
ABS (Auti-lock Brake) 60, 189
Brake (Parking and Brake
System) 59, 271
Charging System 58, 269
Cruise Control 63
DRL (Daytime Running
Lights) 63
High Beam 63
Key (Immobilizer System) 61
Low Fuel 62
Low Oil Pressure 58, 268
Side Airbag Off 59
SRS 59
Turn Signal and Hazard
Warning 61
Washer Level 63

Indicators, Instrument Panel..... 58
Infant Restraint..... 37
Infant Seats..... 37
Tether Anchorage Points 45
Inflation, Proper Tire 245
Inside Mirror..... 95
Inspection, Tire..... 247
Instrument Panel 57
Instrument Panel Brightness 72
Interior Lights..... 103
Introduction..... i

J

Jacking up the Car..... 259
Jack, Tire 258
Jump Starting 264

K

Keys..... 75

L

Label, Certification..... 282
Lane Change, Signaling 70
Lap/Shoulder Belts..... 14, 18
Lights
Bulb Replacement 233
Indicator..... 57
Parking..... 70
Turn Signal..... 70
Load Limit 174
LOCK (Ignition Key Position) 77
Locks
Anti-theft Steering Column 77
Fuel Fill Door 165
Glove Box 99
Trunk 82
Low Coolant Level..... 169, 221
Lower Gear, Downshifting
to a 180
Low Oil Pressure Indicator 58, 268
Lubricant Specifications
Chart 284, 286
Luggage, Storing (Cargo) 173
Luggage Net (Cargo Net) 176

M

Maintenance..... 201
Owner's Maintenance
Checks 204
Record..... 207, 212
Required Indicator..... 63
Safety..... 202
Schedule 205-206, 210-211
Malfunction Indicator Lamp .. 58, 269
Manual Transmission..... 180
Manual Transmission
Fluid 228, 229
Meters, Gauges..... 65
Methanol in Gasoline 164
Mirrors, Adjusting 96
Modifications..... 172
Modifying Your Vehicle..... 172
Moonroof 94
Closing Manually..... 274
Operation 94

CONTINUED

N

Neutral Gear Position..... 184
New Vehicle Break-in 164
Normal Shift Speeds..... 181
NOTICE, Explanation of..... ii
Numbers, Identification..... 282

O

Octane Requirement, Gasoline.... 164
Odometer..... 65
Odometer/Outside Temperature
  Indicator 65, 66
Odometer, Trip 65
Oil
  Change, How to 218
  Change, When to..... 205, 210
  Checking Engine 168
  Pressure Indicator..... 58, 268
  Selecting Proper Viscosity
    Chart 218
ON (Ignition Key Position) 77
Operation in Foreign Countries... 292
Outside Mirrors 96
Outside Temperature..... 66
Overheating, Engine 266
Owner's Maintenance Checks..... 204
Oxygenated Fuel 164

P

Panel Brightness Control 72
Park Gear Position..... 184
Parking..... 187
Parking Brake 97
Parking Lights..... 70
Parking Over Things that Burn... 187
PGM-FI System..... 294
Pollen Filter 242
Power Door Locks..... 78
Power Socket Locations..... 98
Power Windows 91
Pregnancy, Using Seat Belts..... 16
Protecting Adults and Teens..... 11
  Additional Safety Precautions.... 16
  Advice for Pregnant Women..... 16
Protecting Children 32
  Protecting Infants..... 37
  Protecting Larger Children..... 47
  Protecting Small Children 38
  Using Child Seats with
    Tethers..... 45
  Using LATCH 41

R

Radiator Overheating..... 266
Radio/CD Sound
  System..... 120, 134
Readiness Codes..... 270
Rear Lights, Bulb Replacement... 238
Rear Seat Access 86
Rear Seat, Folding 89
Rear View Mirror..... 95
Rear Window Defogger 73
Reclining the Seat Backs 83, 85
Recommended Shift
  Speeds 181
Reminder Indicators..... 58
Remote Transmitter..... 79
Replacement Information
  Dust and Pollen Filter 242
  Engine Oil and Filter..... 218
  Fuses 275
  Light Bulbs 233
  Schedule 205, 210

Tires 248
Wiper Blades 243
Replacing Seat Belts After a Crash 19
Reserve Tank, Coolant..... 169, 221
Restraint, Child 32
Reverse Gear Position..... 184
Roof Rack 175
Rotation, Tire 248

S

Safety Belts..... 8, 18
Safety Defects, Reporting* 302
Safety Features 7
Airbags..... 9, 21
Seat Belts 8
Safety Labels, Location of 52
Safety Messages ii
Seat Belts 8, 18
Additional Information..... 18
Automatic Seat Belt Tensioners..... 19
Cleaning 240
Lap/Shoulder Belt..... 14, 18
Maintenance..... 19
Reminder Indicator and Beeper..... 18, 58
System Components..... 18
Use During Pregnancy..... 16
Seat Heaters 90
Seats, Adjusting the..... 83
Security System 155
Select/Reset Knob 65, 66
Serial Number 282
Service Intervals 205, 210
Service Manual* 303
Service Station Procedures 165
Setting the Clock 154
Shift Lever Position Indicators 183
Shift Lock Release..... 186
Side Airbags 26
How Your Side Airbags Work.... 26
How the Side Airbag Off Indicator Works..... 28
Side Curtain Airbags 27
How Your Side Curtain Airbags Work..... 27
Signaling Turns..... 70
6-speed Manual Transmission 180
Fluid Level..... 228
Shifting..... 180
Reverse Lockout..... 182
Snow Tires..... 250
Sound System..... 120
Spare Tire
Inflating..... 256
Specifications 285, 287
Spark Plugs..... 285, 287
Specifications Charts 284, 286
Speed Control..... 156
Speed Limiter..... 182, 185
SRS, Additional Information..... 21
Additional Safety Precautions.... 31
How Your Airbags Work 22, 26, 27
How Your SRS Indicator Works..... 27
SRS Components 21
SRS Service..... 30
SRS Indicator..... 27, 59
START (Ignition Key Position) 77
Starting the Engine..... 179
In Cold Weather at High Altitude 179
With a Dead Battery 264
Steam Coming from Engine..... 266

CONTINUED

Steering Wheel
Adjustment 74
Anti-theft Column Lock 77
Steering Wheel Buttons..... 152
Stereo Sound
System..... 120
Storing Your Vehicle..... 254
Sun Visor..... 101
Sunglasses Holder 103
Supplemental Restraint System
Servicing 30
SRS Indicator..... 27, 59
System Components..... 21
Synthetic Oil..... 218

T

Taillights, Changing Bulbs in..... 238
Taking Care of the Unexpected .. 255
Technical Descriptions
DOT Tire Quality Grading 288
Emissions Control Systems..... 293
Oxygenated Fuels..... 164
Three Way Catalytic
Converter..... 295
Temperature Gauge 67
Temperature, Inside Sensor..... 119
Temperature, Outside..... 66
Tether Anchorage Points 45
Three Way Catalytic Converter... 295
Tilt the Steering Wheel..... 74
Time, Setting the 154
Timing Belt..... 232
Tire Chains..... 250
Tire, How to Change a Flat 257
Tire Information 290
Tires 245
Air Pressure 245, 246
Chains 250
Checking Wear 247
Compact Spare..... 256
DOT Tire Quality Grading 288
Inflation..... 245
Inspection 247
Labeling 290
Replacing 248
Rotating..... 248
Snow 250
Specifications 285, 287
Tools, Tire Changing 257
Towing
A Trailer..... 194
Emergency Wrecker..... 272
Equipment and Accessories..... 196
Weight Limit 194, 195
Traction Control System (TCS)... 191
TCS Activation Indicator 60, 192
TCS Indicator..... 60, 191
TCS ON/OFF Switch..... 192
Trailer Loading 194
Trailer Towing Tips..... 198
Transmission
Checking Fluid Level,
Automatic 225, 226
Checking Fluid Level,
Manual 228
Fluid Selection 225, 228
Identification Number..... 283
Shifting the Automatic..... 183
Shifting the Manual..... 180
Treadwear 288
Trip Meter 66
Trunk..... 82
Emergency Opener 82
Hooks 176
Opening the..... 82
Open Monitor Indicator..... 61
Turn Signals 70

U

Unexpected, Taking Care
of the 255
Uniform Tire Quality Grading 288
Unleaded Gasoline..... 164
Used Oil, How to Dispose of 220

V

Vanity Mirror 102
Vehicle Capacity Load 174
Vehicle Dimensions 284, 286
Vehicle Identification Number..... 282
Vehicle Storage..... 254
VIN 282
Viscosity, Oil..... 218

W

WARNING, Explanation of ii
Warning Labels, Location of 52
Warranty Coverages* 301
Washer, Windshield
Checking the Fluid Level 224
Operation..... 69
Wheels
Adjusting the Steering 74
Alignment and Balance..... 247
Compact Spare..... 256
Wrench 258
Windows
Auto Reverse..... 92
Operating the Power..... 91
Rear, Defogger 73
Windshield
Cleaning..... 69
Washers..... 69
Wipers, Windshield
Changing Blades..... 243
Operation..... 69
Worn Tires 247
Wrecker, Emergency Towing..... 272

* : U.S. only

Service Information Summary

Gasoline:
Unleaded gasoline, pump octane number of 86 or higher.

Fuel Tank Capacity:
17.09 US gal (64.7 ℓ)

Recommended Engine Oil:
API Premium grade 5W-20 detergent oil (see page 217).

Oil change capacity (including filter):
4-cylinder models
4.4 US qt (4.2 ℓ)
6-cylinder models
4.5 US qt (4.3 ℓ)

Automatic Transmission Fluid:
Honda ATF-Z1 (Automatic Transmission Fluid) preferred, or a DEXRON® III ATF as a temporary replacement (see pages 225 and 227).

5-speed/6-speed Manual Transmission Fluid:
Honda Manual Transmission Fluid preferred, or an SAE 10W-30 or 10W-40 motor oil as a temporary replacement (see pages 228 and 229).
Capacity:
5-speed manual transmission:
2.0 US qt (1.9 ℓ)
6-speed manual transmission:
2.3 US qt (2.2 ℓ)

Power Steering Fluid:
Honda Power Steering Fluid preferred, or another brand of power steering fluid as a temporary replacement. Do not use ATF (see page 231).

Brake Fluid:
Honda Heavy Duty Brake Fluid DOT 3 preferred, or a DOT 3 or DOT 4 brake fluid as a temporary replacement (see page 230).

Tire Pressure (measured cold):
4-cylinder LX
Front:
30 psi (210 kPa , 2.1 kgf/cm^2)
Rear:
29 psi (200 kPa , 2.0 kgf/cm^2)

EX-V6 with M/T
Front:
32 psi (220 kPa , 2.2 kgf/cm^2)
Rear:
29 psi (200 kPa , 2.0 kgf/cm^2)

All other models
Front:
32 psi (220 kPa , 2.2 kgf/cm^2)
Rear:
30 psi (210 kPa , 2.1 kgf/cm^2)

Spare Tire Pressure:
60 psi (420 kPa , 4.2 kgf/cm^2)