Power Source

Multiplex Communication System (LAN)

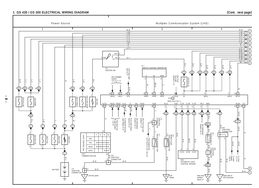

Multiplex Communication System (LAN)

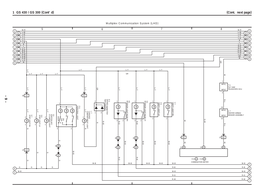

Multiplex Communication System (LAN)

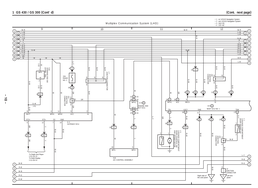

Multiplex Communication System (LAN)

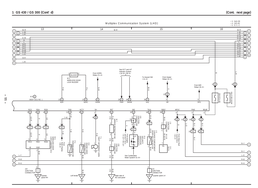

Multiplex Communication System (LAN)

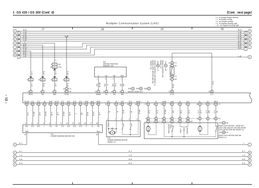

Multiplex Communication System (LAN)

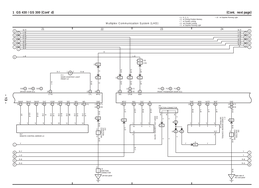

Multiplex Communication System (LAN)

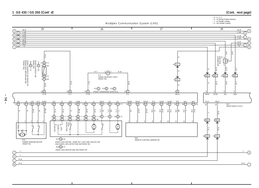

Multiplex Communication System (LAN)

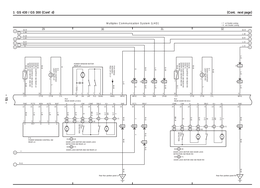

Multiplex Communication System (LAN)

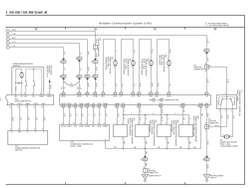

Power Source

Multiplex Communication System (MXS)

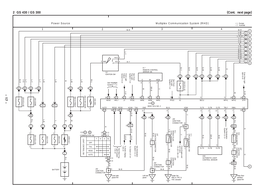

Multiplex Communication System (MXS)

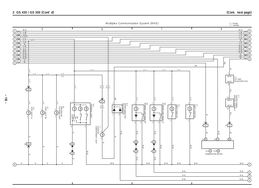

Multiplex Communication System (MXS)

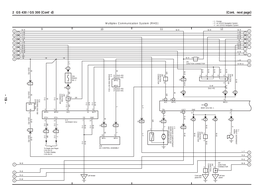

Multiplex Communication System (MXS)

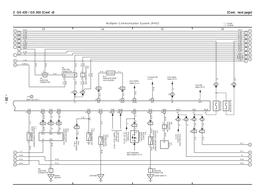

Multiplex Communication System (MXS)

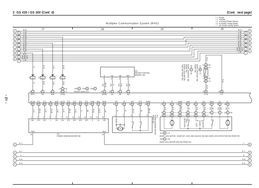

Multiplex Communication System (MXS)

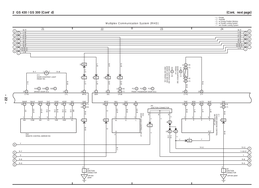

Multiplex Communication System (MXS)

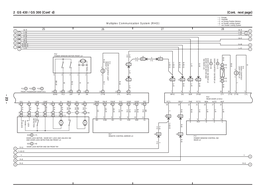

Multiplex Communication System (MXS)

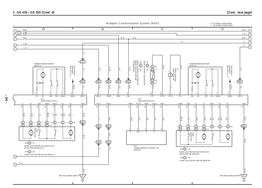

Multiplex Communication System (MXS)

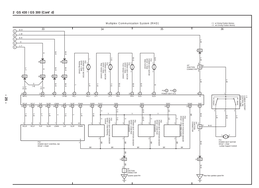

(Cont. next page)

Power Source

Engine Control and Engine Immobiliser System (LHD 2JZ–GE)

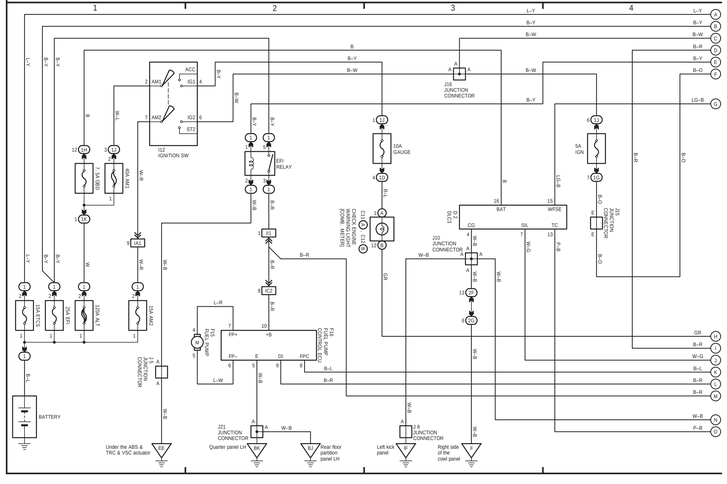

(Cont. next page)

Engine Control and Engine Immobiliser System (LHD 2JZ–GE)

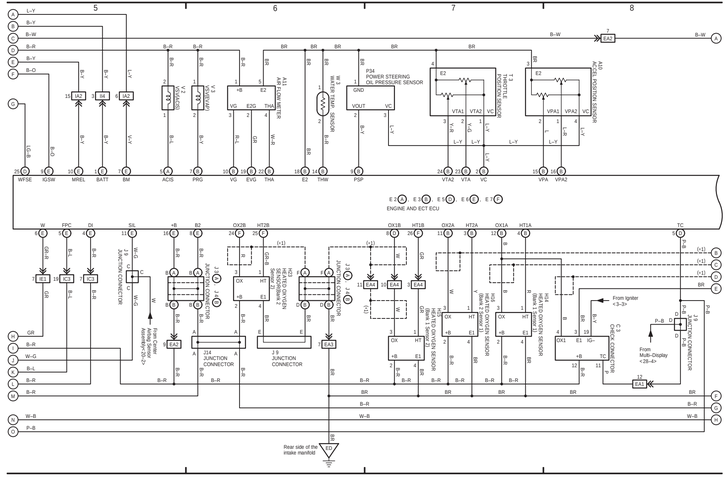

Engine Control and Engine Immobiliser System (LHD 2JZ–GE)

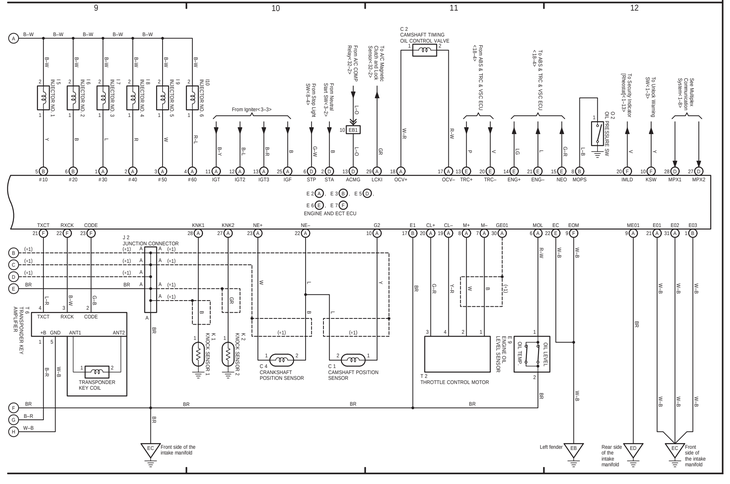

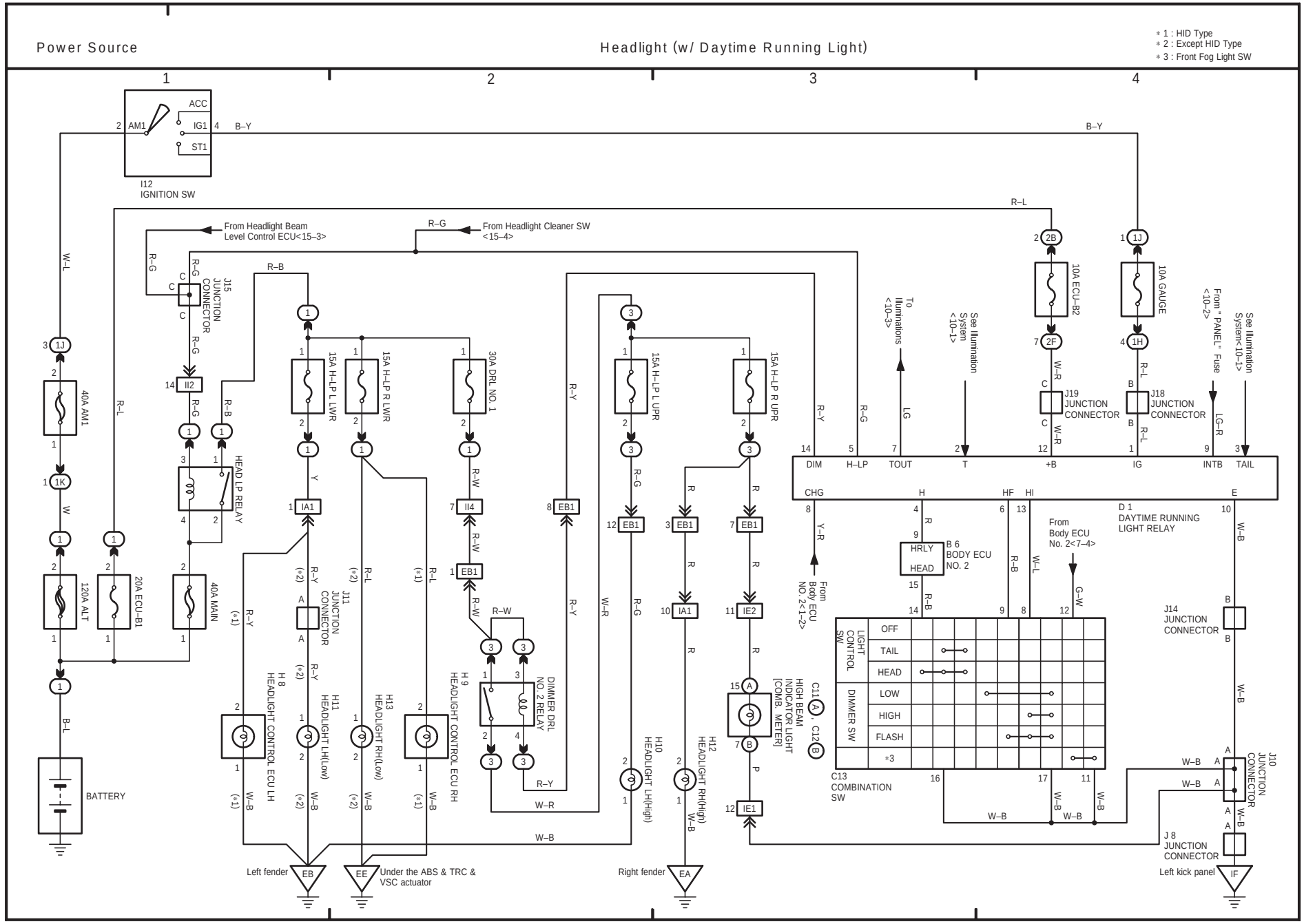
Power Source
Headlight (w/ Daytime Running Light)
* 1 : HID Type
* 2 : Except HID Type
* 3 : Front Fog Light SW
I12 IGNITION SW
ACC
IG1
ST1
AM1
B–Y
R–L
R–G
From Headlight Beam Level Control ECU<15–3>
From Headlight Cleaner SW <15–4>
J15 JUNCTION CONNECTOR
40A AM1
120A ALT
20A ECU–B1
40A MAIN
HEAD LP RELAY
15A H–LP L LWR
15A H–LP R LWR
30A DRL NO. 1
15A H–LP L UPR
15A H–LP R UPR
DIMMER DRL NO. 2 RELAY
H 8 HEADLIGHT CONTROL ECU LH
H11 HEADLIGHT LH(Low)
H13 HEADLIGHT RH(Low)
H 9 HEADLIGHT CONTROL ECU RH
H10 HEADLIGHT LH(High)
H12 HEADLIGHT RH(High)
HIGH BEAM INDICATOR LIGHT [COMB. METER]
J11 JUNCTION CONNECTOR
BATTERY
Left fender
Under the ABS & TRC & VSC actuator
Right fender
10A ECU–B2
10A GAUGE
J19 JUNCTION CONNECTOR
J18 JUNCTION CONNECTOR
To Illuminations <10–3>
See Illumination System <10–1>
From " PANEL" Fuse <10–2>
See Illumination System<10–1>
DIM
H–LP
TOUT
T
+B
IG
INTB
TAIL
CHG
H
HF
HI
E
D 1 DAYTIME RUNNING LIGHT RELAY
From Body ECU No. 2<7–4>
From Body ECU NO. 2<1–2>
HRLY
HEAD
B 6 BODY ECU NO. 2
LIGHT CONTROL SW
DIMMER SW
OFF
TAIL
HEAD
LOW
HIGH
FLASH
*3
C13 COMBINATION SW
J14 JUNCTION CONNECTOR
J10 JUNCTION CONNECTOR
J 8 JUNCTION CONNECTOR
Left kick panel

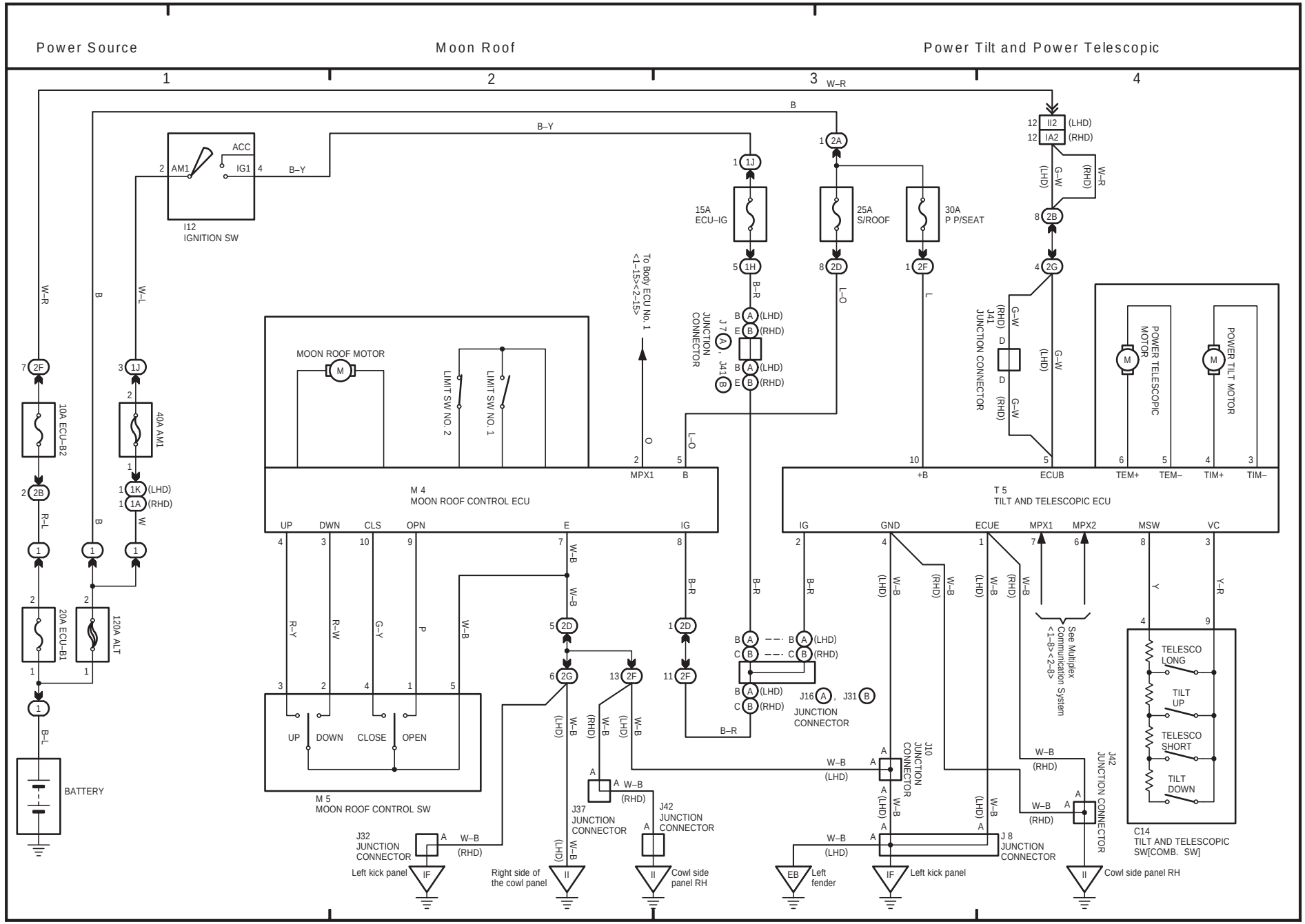
Power Source
Moon Roof
Power Tilt and Power Telescopic
1
2
3
4
W–R
B
B–Y
ACC
AM1
IG1
I12
IGNITION SW
15A
ECU–IG
25A
S/ROOF
30A
P P/SEAT
II2 (LHD)
IA2 (RHD)
G–W (LHD)
W–R (RHD)
To Body ECU No. 1
<1–15><2–15>
JUNCTION CONNECTOR
J7
J41
(LHD)
(RHD)
J41
JUNCTION CONNECTOR
MOON ROOF MOTOR
LIMIT SW NO. 2
LIMIT SW NO. 1
POWER TELESCOPIC MOTOR
POWER TILT MOTOR
10A ECU–B2
40A AM1
20A ECU–B1
120A ALT
BATTERY
M 4
MOON ROOF CONTROL ECU
MPX1
+B
ECUB
TEM+
TEM–
TIM+
TIM–
T 5
TILT AND TELESCOPIC ECU
UP
DWN
CLS
OPN
E
IG
GND
ECUE
MPX1
MPX2
MSW
VC
See Multiplex Communication System
<1–8><2–8>
TELESCO LONG
TILT UP
TELESCO SHORT
TILT DOWN
C14
TILT AND TELESCOPIC SW[COMB. SW]
UP
DOWN
CLOSE
OPEN
M 5
MOON ROOF CONTROL SW
J16
J31
JUNCTION CONNECTOR
J10
JUNCTION CONNECTOR
J42
JUNCTION CONNECTOR
J37
JUNCTION CONNECTOR
J32
JUNCTION CONNECTOR
J 8
JUNCTION CONNECTOR
Left kick panel
Right side of the cowl panel
Cowl side panel RH
Left fender
Left kick panel
Cowl side panel RH
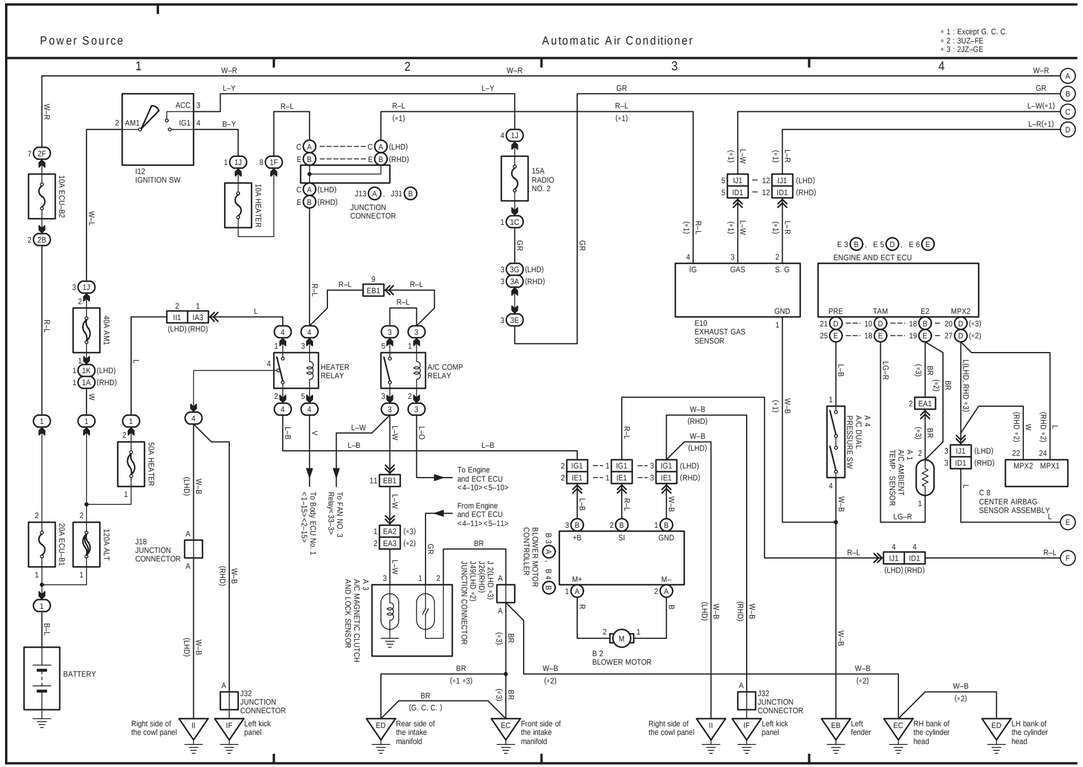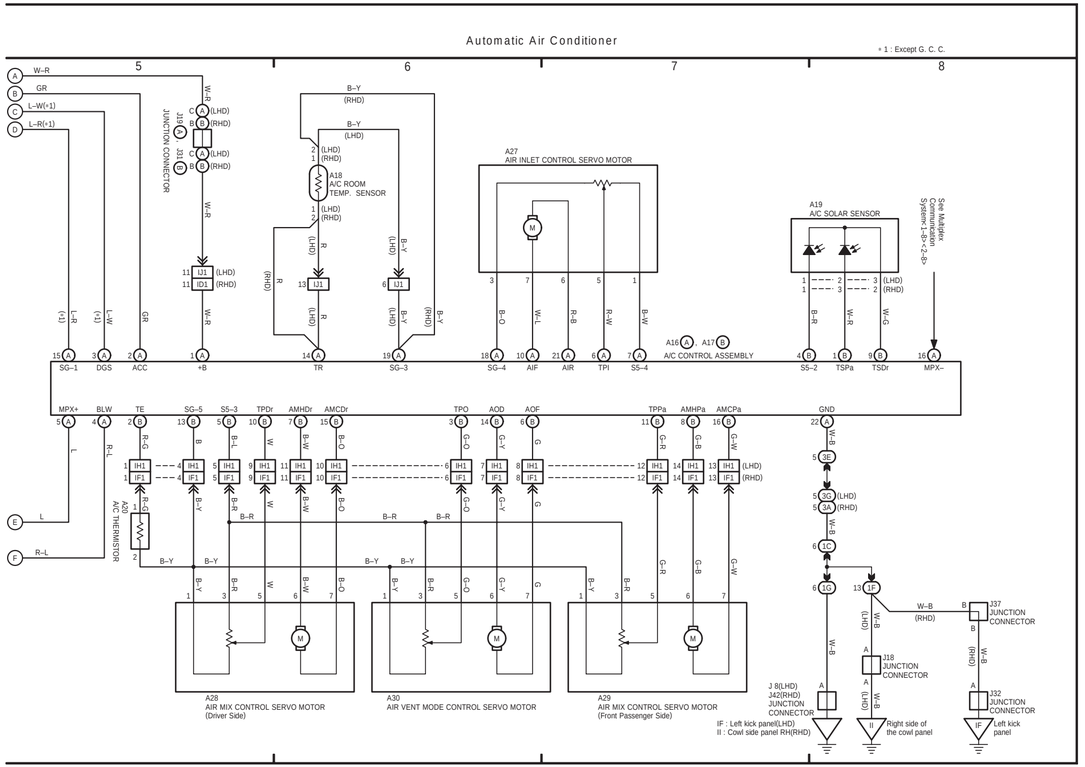
(Cont. next page)