2018

Encore Owner's Manual

buick.com (U.S.)
buick.ca (Canada)

Contents

Introduction 2
In Brief 5
Keys, Doors, and Windows 26
Seats and Restraints 47
Storage 97
Instruments and Controls 102
Lighting 138
Infotainment System 144
Climate Controls 145
Driving and Operating 154
Vehicle Care 198
Service and Maintenance 276
Technical Data 289
Customer Information 292
Reporting Safety Defects 302
OnStar 306
Index 318

Introduction

The names, logos, emblems, slogans, vehicle model names, and vehicle body designs appearing in this manual including, but not limited to, GM, the GM logo, BUICK, the BUICK Emblem, and ENCORE are trademarks and/or service marks of General Motors LLC, its subsidiaries, affiliates, or licensors.

For vehicles first sold in Canada, substitute the name “General Motors of Canada Company” for Buick Motor Division wherever it appears in this manual.

This manual describes features that may or may not be on the vehicle because of optional equipment that was not purchased on the vehicle, model variants, country specifications, features/applications that may not be available in your region, or changes subsequent to the printing of this owner’s manual.

Refer to the purchase documentation relating to your specific vehicle to confirm the features.

Keep this manual in the vehicle for quick reference.

Canadian Vehicle Owners

A French language manual can be obtained from your dealer, at www.helminc.com, or from:

Propriétaires Canadiens

On peut obtenir un exemplaire de ce guide en français auprès du concessionnaire ou à l'adresse suivante:

Helm, Incorporated
Attention: Customer Service
47911 Halyard Drive
Plymouth, MI 48170
USA

Using this Manual

To quickly locate information about the vehicle, use the Index in the back of the manual. It is an alphabetical list of what is in the manual and the page number where it can be found.

About Driving the Vehicle

As with other vehicles of this type, failure to operate this vehicle correctly may result in loss of control or an accident. Be sure to read the driving guidelines in this manual in the section called “Driving and Operating” and specifically *Driver Behavior* ⇨ *155*, *Driving Environment* ⇨ *155*, and *Vehicle Design* ⇨ *155*.

Litho in U.S.A.
Part No. 84098804 C Third Printing

©2018 General Motors LLC. All Rights Reserved.

Danger, Warning, and Caution

Warning messages found on vehicle labels and in this manual describe hazards and what to do to avoid or reduce them.

⚠ Danger
Danger indicates a hazard with a high level of risk which will result in serious injury or death.

⚠ Warning
Warning indicates a hazard that could result in injury or death.

Caution
Caution indicates a hazard that could result in property or vehicle damage.

A circle with a slash through it is a safety symbol which means “Do Not,” “Do not do this,” or “Do not let this happen.”

Symbols

The vehicle has components and labels that use symbols instead of text. Symbols are shown along with the text describing the operation or information relating to a specific component, control, message, gauge, or indicator.

: Shown when the owner’s manual has additional instructions or information.

: Shown when the service manual has additional instructions or information.

: Shown when there is more information on another page — “see page.”

Vehicle Symbol Chart

Here are some additional symbols that may be found on the vehicle and what they mean. See the features in this manual for information.

: Airbag Readiness Light

: Air Conditioning

: Antilock Brake System (ABS)

: Brake System Warning Light

: Charging System

: Cruise Control

: Do Not Puncture

: Do Not Service

: Engine Coolant Temperature

: Exterior Lamps

: Flame/Fire Prohibited

: Fuel Gauge

: Fuses

: Headlamp High/Low-Beam Changer

: ISOFIX/LATCH System Child Restraints

: Malfunction Indicator Lamp

: Oil Pressure

: Power

: Remote Vehicle Start

: Seat Belt Reminders

: Tire Pressure Monitor

: Traction Control/StabiliTrak

: Under Pressure

: Windshield Washer Fluid

In Brief

Instrument Panel

Instrument Panel 6

Initial Drive Information

Initial Drive Information 8
Stop/Start System 8
Remote Keyless Entry (RKE) System 8
Remote Vehicle Start 8
Door Locks 9
Liftgate 9
Windows 10
Seat Adjustment 10
Memory Features 11
Second Row Seats 12
Heated Seats 12
Head Restraint Adjustment 12
Seat Belts 13
Passenger Sensing System . . . 13
Mirror Adjustment 13
Steering Wheel Adjustment 14
Interior Lighting 14
Exterior Lighting 15
Windshield Wiper/Washer 16
Climate Controls 17
Transmission 18

Vehicle Features

Infotainment System 19
Steering Wheel Controls 19
Cruise Control 19
Driver Information Center (DIC) 20
Forward Collision Alert (FCA) System 20
Lane Departure Warning (LDW) 20
Side Blind Zone Alert (SBZA) 20
Rear Vision Camera (RVC) 21
Rear Cross Traffic Alert (RCTA) System 21
Parking Assist 21
Power Outlets 21
Universal Remote System 22
Sunroof 22

Performance and Maintenance

Traction Control/Electronic Stability Control 23
Tire Pressure Monitor 23
Fuel 23
E85 or FlexFuel 24
Engine Oil Life System 24
Driving for Better Fuel Economy 24
Roadside Assistance Program 25

Instrument Panel

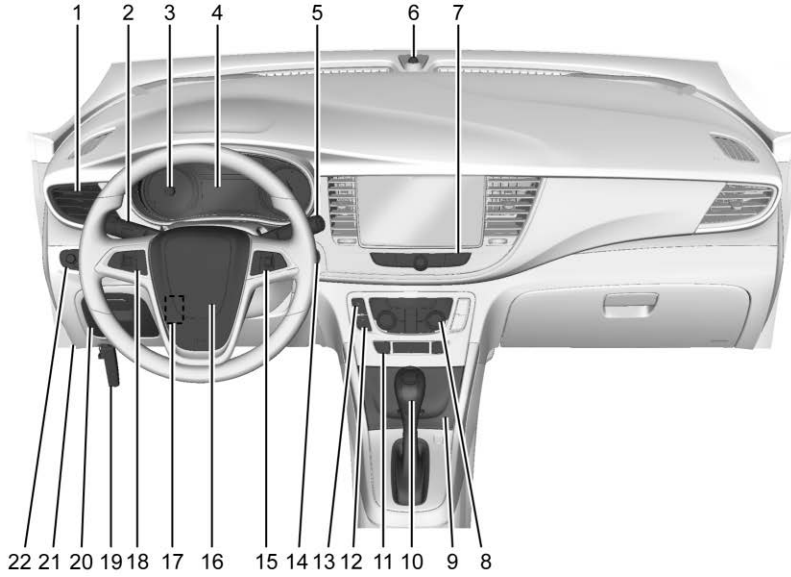

1. *Air Vents* ⇨ *152*.
2. Turn Signal Lever. See *Turn and Lane-Change Signals* ⇨ *140*.

   Headlamp High/Low-Beam Changer ⇨ *138*.
3. *Instrument Cluster* ⇨ *109*.
4. Driver Information Center (DIC) Display.
   See *Driver Information Center (DIC) (Uplevel)* ⇨ *125* or *Driver Information Center (DIC) (Base Level)* ⇨ *123*.
5. *Windshield Wiper/Washer* ⇨ *103*.

   Rear Window Wiper/Washer ⇨ *105*.
6. Light Sensor. See *Automatic Headlamp System* ⇨ *139*.
7. *Infotainment* ⇨ *144*.
8. *Climate Control Systems* ⇨ *145* or *Dual Automatic Climate Control System* ⇨ *148* (If Equipped).

   Heated Steering Wheel ⇨ *103* (If Equipped).
9. *Instrument Panel Storage* ⇨ *97*.
10. Shift Lever. See *Automatic Transmission* ⇨ *175*.
11. *Traction Control/Electronic Stability Control* ⇨ *180*.

    Hazard Warning Flashers ⇨ *140*.

    Passenger Airbag Status Indicator. See *Passenger Sensing System* ⇨ *72*.
12. *Lane Departure Warning (LDW)* ⇨ *192* (If Equipped).
13. *Parking Assist* ⇨ *186* (If Equipped).
14. *Ignition Positions* ⇨ *166*.
15. *Steering Wheel Controls* ⇨ *103*.
16. *Horn* ⇨ *103*.
17. *Steering Wheel Adjustment* ⇨ *103*.
18. *Cruise Control* ⇨ *182*.

    Forward Collision Alert (FCA) System ⇨ *188* (If Equipped).
19. Hood Release. See *Hood* ⇨ *201*.
20. *Instrument Panel Storage* ⇨ *97*.
21. Data Link Connector (DLC) (Out of View). See *Malfunction Indicator Lamp (Check Engine Light)* ⇨ *116*.
22. *Exterior Lamp Controls* ⇨ *138*.

    Instrument Panel Illumination Control ⇨ *141*.

    Front Fog Lamps ⇨ *141* (If Equipped).

Initial Drive Information

This section provides a brief overview about some of the important features that may or may not be on your specific vehicle.

For more detailed information, refer to each of the features which can be found later in this owner's manual.

Stop/Start System

The vehicle may have a fuel saving Stop/Start system to shut off the engine and help conserve fuel.

When the brakes are applied and the vehicle is at a complete stop, the engine may turn off. When the brake pedal is released or the accelerator pedal is pushed, the engine will restart. The engine may restart even while the brake is applied. See *Starting the Engine* ⇨ *168*.

Remote Keyless Entry (RKE) System

The Remote Keyless Entry (RKE) transmitter may work up to 60 m (197 ft) away from the vehicle.

To remove the key, press the button on the back of the RKE transmitter, and pull the key out. Never pull the key out without pressing the button. The key can be used for all locks.

: Press to unlock the driver door or all doors, depending on the vehicle personalization settings.

: Press to lock all doors.

Lock and unlock feedback can be personalized. See *Vehicle Personalization* ⇨ *128*.

: Press and release one time to initiate vehicle locator. Press and hold for at least three seconds to sound the panic alarm. Press again to cancel the panic alarm.

See *Keys* ⇨ *26* and *Remote Keyless Entry (RKE) System Operation* ⇨ *27*.

Remote Vehicle Start

If equipped, the engine can be started from outside of the vehicle.

Starting the Vehicle

1. Press and release on the RKE transmitter.
2. Immediately press and hold for at least four seconds or until the turn signal lamps flash.

Start the vehicle normally after entering.

When the vehicle starts, the parking lamps will turn on.

Remote start can be extended.

Canceling a Remote Start

To cancel a remote start, do one of the following:

- Press and hold ⏻ until the parking lamps turn off.
- Turn on the hazard warning flashers.
- Turn the vehicle on and then off.

See *Remote Vehicle Start* ⇨ *33*.

Door Locks

To lock or unlock the doors from the outside:

- Press 🔓 or 🔒 on the Remote Keyless Entry (RKE) transmitter. See *Remote Keyless Entry (RKE) System Operation* ⇨ *27*.
- Use the key in the driver door. See *Door Locks* ⇨ *35*.

To lock or unlock the doors from the inside:

🔒 **:** Press to lock the door.

🔓 **:** Press to unlock the door.

See *Power Door Locks* ⇨ *36*.

Liftgate

To lock or unlock the liftgate from inside, press 🔒 or 🔓 on the power door locks. See *Power Door Locks* ⇨ *36*.

To lock or unlock the liftgate from outside, press 🔒 or 🔓 on the Remote Keyless Entry (RKE) transmitter. See *Remote Keyless Entry (RKE) System Operation* ⇨ *27*.

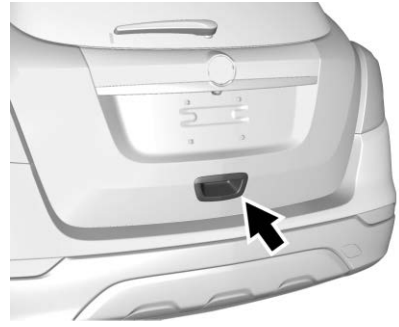

To open the liftgate, press the touch pad below the license plate and lift up.

See *Liftgate* ⇨ *38*.

Windows

Power windows work when the ignition is on, in ACC/ACCESSORY, or when Retained Accessory Power (RAP) is active. See *Retained Accessory Power (RAP)* ⇨ *171*.

Using the window switch, press to open or pull to close the window.

The windows may be temporarily disabled if they are used repeatedly within a short time.

Seat Adjustment

Manual Seats

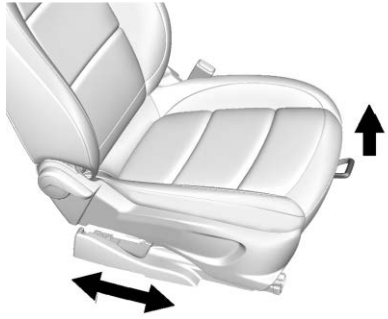

To adjust a manual seat:

1. Pull the handle at the front of the seat.
2. Slide the seat to the desired position and release the handle.
3. Try to move the seat back and forth to be sure it is locked in place.

See *Seat Adjustment* ⇨ *49*.

Power Seats

To adjust a power seat:

- Move the seat forward or rearward by sliding the control forward or rearward.
- Raise or lower the front part of the seat cushion by moving the front of the control up or down.
- Raise or lower the entire seat by moving the rear of the control up or down.

See *Power Seat Adjustment* ⇨ *50*.

Lumbar Adjustment

If available, press the front or rear of the switch to increase or decrease lumbar support. Release the switch when the desired level of support is reached.

See *Lumbar Adjustment* ⇨ *50*.

Reclining Seatbacks

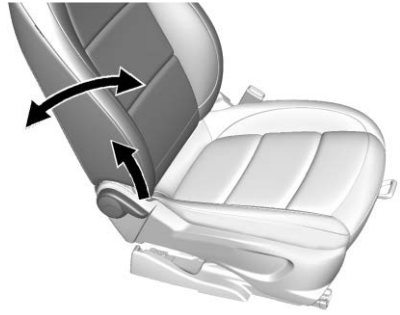

Manual Seat Shown, Power Seat Similar

To recline the seatback:

1. Lift the lever.

   If necessary, move the seat belt out of the way to access the lever.
2. Move the seatback to the desired position, then release the lever to lock the seatback in place.
3. Push and pull on the seatback to make sure it is locked.

To return the seatback to an upright position:

1. Lift the lever fully without applying pressure to the seatback, and the seatback returns to the upright position.
2. Push and pull on the seatback to make sure it is locked.

See *Reclining Seatbacks* ⇨ *50*.

Memory Features

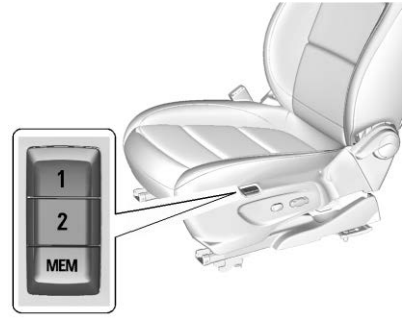

If equipped, the MEM, 1, and 2 buttons on the outboard side of the driver seat are used to manually store and recall the driver seat and

outside mirror positions. These manually stored positions are referred to as Button Memory positions.

The vehicle will also automatically store driver seat and outside mirror positions to the current driver Remote Keyless Entry (RKE) transmitter when the ignition is turned off. These automatically stored positions are referred to as RKE Memory positions.

See *Memory Seats* ⇨ *51* and *Vehicle Personalization* ⇨ *128*.

Second Row Seats

The rear seatbacks can be folded down to increase cargo space.

See *Rear Seats* ⇨ *56*.

Heated Seats

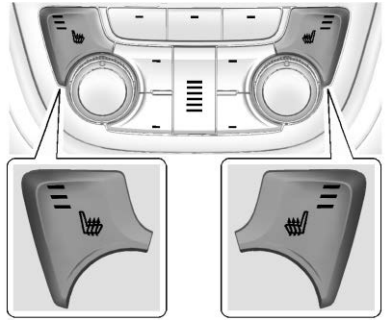

If equipped, the controls are on the climate control panel. The engine must be running to operate the heated seats.

Press or to heat the driver or passenger seat cushion and seatback.

Press the control once for the highest setting. With each press of the control, the heated seat will change to the next lower setting, and then the off setting. Three lights indicate the highest setting and one light the lowest.

See *Heated Front Seats* ⇨ *53*.

Head Restraint Adjustment

Do not drive until the head restraints for all occupants are installed and adjusted properly.

To achieve a comfortable seating position, change the seatback recline angle as little as necessary while keeping the seat and the head restraint height in the proper position.

See *Head Restraints* ⇨ *48* and *Seat Adjustment* ⇨ *49*.

Seat Belts

Refer to the following sections for important information on how to use seat belts properly:

- *Seat Belts* ⇨ *59*.
- *How to Wear Seat Belts Properly* ⇨ *60*.
- *Lap-Shoulder Belt* ⇨ *61*.
- *Lower Anchors and Tethers for Children (LATCH System)* ⇨ *84*.

Passenger Sensing System

United States

Canada and Mexico

The passenger sensing system turns off the front outboard passenger frontal airbag and knee airbag (if equipped) under certain conditions. No other airbag is affected by the passenger sensing system. See *Passenger Sensing System* ⇨ *72* for important information.

The passenger airbag status indicator will be visible on the instrument panel when the vehicle is started. See *Passenger Airbag Status Indicator* ⇨ *115*.

Mirror Adjustment

Exterior Mirrors

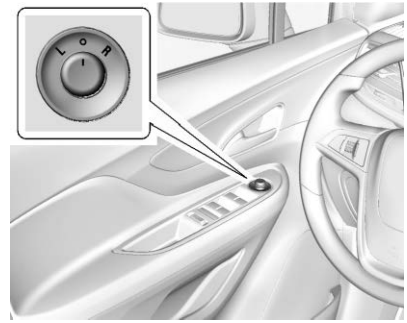

To adjust the mirrors:

1. Turn the selector switch to L (Left) or R (Right) to choose the driver or passenger mirror.
2. Move the control to adjust the mirror.

3. Turn the selector switch to ◯ to deselect the mirror.

Interior Mirror

Adjustment

Hold the rearview mirror in the center and move it to view the area behind the vehicle.

Manual Rearview Mirror

If equipped with a manual rearview mirror, push the tab forward for daytime use and pull it for nighttime use to avoid glare from the headlamps from behind. See *Manual Rearview Mirror* ⇨ *42*.

Automatic Dimming Rearview Mirror

If equipped with an automatic dimming rearview mirror, the mirror will automatically reduce the glare from the headlamps from behind. The dimming feature comes on when the vehicle is started.

See *Automatic Dimming Rearview Mirror* ⇨ *42*.

Steering Wheel Adjustment

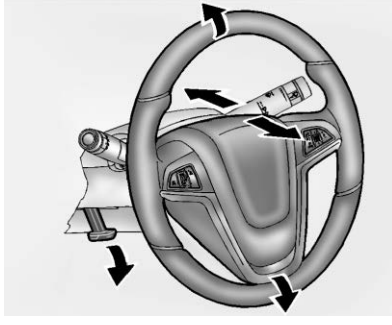

To adjust the steering wheel:

1. Pull the lever down.
2. Move the steering wheel up or down.
3. Pull or push the steering wheel closer or away from you.
4. Lift the lever up to lock the steering wheel in place.

Do not adjust the steering wheel while driving.

Interior Lighting

Front and Rear Dome Lamps

The front dome lamp controls are in the overhead console.

: Press to turn the lamps off, even when a door is open.

: When the button is returned to the middle position, the lamps turn on automatically when a door is opened.

: Press to turn on the dome lamps.

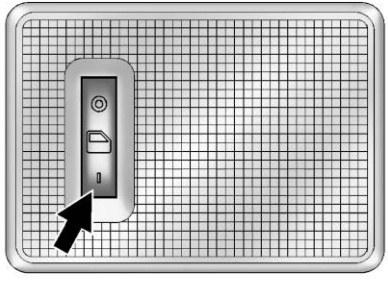

The rear dome lamp controls are in the headliner above the rear seats.

◯ **:** Press to turn the lamps off, even when a door is open.

: When the button is returned to the middle position, the lamps turn on automatically when a door is opened.

: Press to turn on the dome lamps.

Reading Lamps

The front reading lamps are in the overhead console.

or **:** Press to turn each lamp on or off.

For more information about interior lighting, see *Instrument Panel Illumination Control* ⇨ *141* or *Courtesy Lamps* ⇨ *141*.

Exterior Lighting

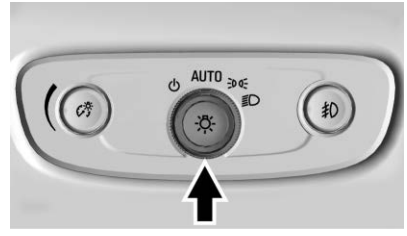

The exterior lamp control is on the instrument panel to the left of the steering column.

There are four positions:

⏻ **:** Turns the exterior lamps off and deactivates the AUTO mode. Turn ⏻ again to reactivate the AUTO mode.

In Canada, the headlamps will automatically reactivate when the vehicle is shifted out of P (Park).

AUTO : Turns the exterior lamps on and off automatically depending on outside lighting.

: Turns on the parking lamps including all lamps, except the headlamps.

: Turns on the headlamps together with the parking lamps and instrument panel lights. A warning chime sounds if the driver door is opened when the ignition is off and the headlamps are on.

: If equipped with fog lamps, press to turn the lamps on or off.

See:

- *Exterior Lamp Controls* ⇨ *138*.
- *Daytime Running Lamps (DRL)* ⇨ *139*.
- *Front Fog Lamps* ⇨ *141*.

Windshield Wiper/Washer

The windshield wiper/washer lever is on the right side of the steering column.

Move the lever to one of the following positions:

HI : Use for fast wipes.

LO : Use for slow wipes.

INT : Use this setting for intermittent wipes or Rainsense™, if equipped. For intermittent wipes, move the windshield wiper lever to INT. Turn the INT band up for more frequent wipes or down for less frequent wipes.

If equipped with Rainsense, move the windshield wiper lever to INT and turn the INT band to adjust the sensitivity to moisture.

- Turn the band up for more sensitivity to moisture.
- Turn the band down for less sensitivity to moisture.
- Move the windshield wiper lever out of the INT position to deactivate Rainsense.

OFF : Use to turn the wipers off.

1X : For a single wipe, briefly move the wiper lever down. For several wipes, hold the wiper lever down.

FRONT **:** Pull the windshield wiper lever toward you to spray windshield washer fluid and activate the wipers.

Rear Window Wiper/Washer

The rear wiper/washer controls are on the end of the windshield wiper lever.

ON : Press the upper portion of the button for continuous rear window wipes.

OFF : The rear wiper turns off when the button is returned to the middle position.

INT : Press the lower portion of the button to set a delay between wipes.

REAR : Push the windshield wiper lever forward to spray washer fluid on the rear window. The lever returns to its starting position when released.

See *Windshield Wiper/Washer* ⇨ *103* and *Rear Window Wiper/Washer* ⇨ *105*.

Climate Controls

The heating, cooling, defrosting, and ventilation for the vehicle can be controlled with these systems.

Climate Control System

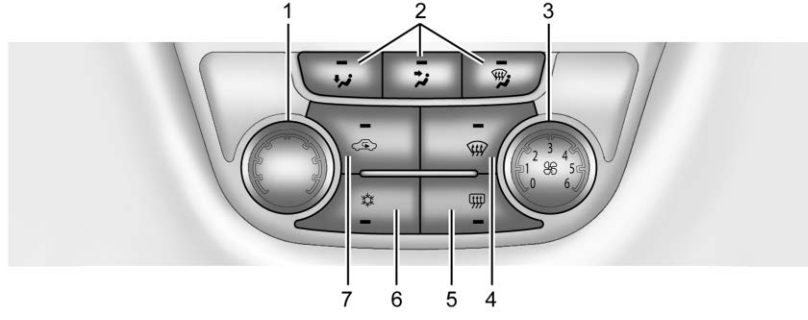

1. Temperature Control
2. Air Delivery Modes
3. Fan Control
4. Defrost
5. Rear Window Defogger
6. Air Conditioning or Comfort/Eco Air Conditioning
7. Recirculation

See *Climate Control Systems* ⇨ *145* (if equipped).

Dual Automatic Climate Control System

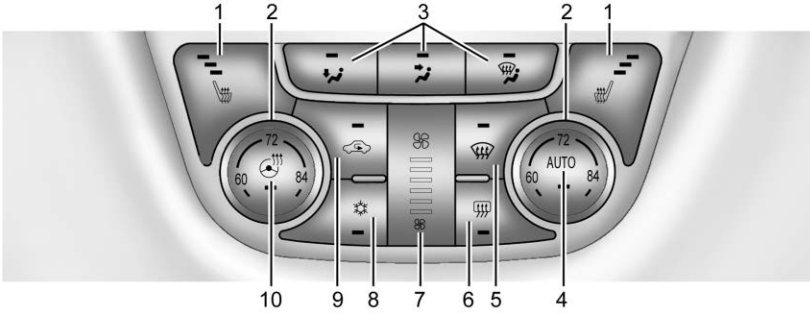

1. Driver and Passenger Heated Seats (If Equipped)
2. Driver and Passenger Temperature Controls
3. Air Delivery Modes
4. AUTO (Automatic Operation)
5. Defrost
6. Rear Window Defogger
7. Fan Controls
8. Air Conditioning or Comfort/ Eco Air Conditioning
9. Recirculation
10. Heated Steering Wheel (If Equipped)

See *Dual Automatic Climate Control System* ⇨ *148* (if equipped).

Transmission

Driver Shift Control (DSC)

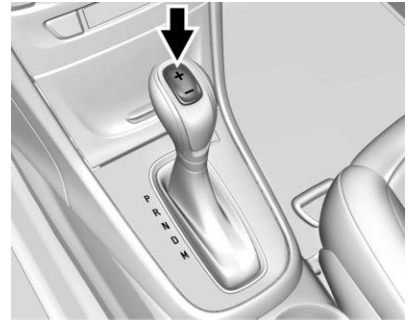

DSC allows you to shift an automatic transmission similar to a manual transmission. To use the DSC feature:

1. Move the shift lever from D (Drive) rearward to M (Manual Mode).

2. Press the + (plus) end of the button on the top of the shift lever to upshift, or press the − (minus) end of the button to downshift.

See *Manual Mode* ⇨ *177*.

Vehicle Features

Infotainment System

See the infotainment manual for information on the radio, audio players, phone, navigation system, and voice or speech recognition. It also includes information on settings.

Steering Wheel Controls

The infotainment system can be operated by using the steering wheel controls. See "Steering Wheel Controls" in the infotainment manual.

Cruise Control

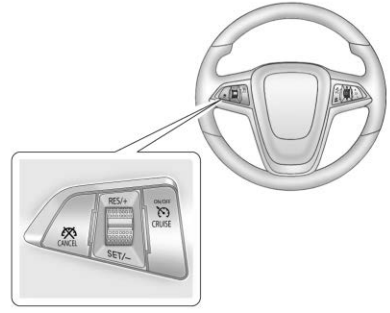

ON/OFF CRUISE **:** Press to turn the cruise control system on or off. A white indicator comes in the instrument cluster when cruise is turned on.

RES/+ : If there is a set speed in memory, move the thumbwheel up briefly to resume to that speed or hold upward to accelerate. If cruise control is already active, use to increase vehicle speed.

SET/− : Move the thumbwheel down briefly to set the speed and activate cruise control. If cruise control is already active, use to decrease speed.

CANCEL : Press to disengage cruise control without erasing the set speed from memory.

See *Cruise Control* ⇨ *182*.

Driver Information Center (DIC)

The DIC display is in the instrument cluster. It shows the status of many vehicle systems. The controls for the DIC are on the turn signal lever.

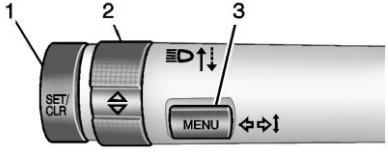

1. **SET/CLR:** Press to set or clear the menu item displayed.
2. **:** Turn the band to scroll through the menu items.
3. **MENU:** Press to display the DIC menus. This button is also used to return to or exit the last screen displayed on the DIC.

See *Driver Information Center (DIC) (Uplevel)* ⇨ *125* or *Driver Information Center (DIC) (Base Level)* ⇨ *123*.

Forward Collision Alert (FCA) System

If equipped, FCA may help avoid or reduce the harm caused by front-end crashes. FCA provides a green indicator, , when a vehicle is detected ahead. When approaching a vehicle ahead too quickly, FCA provides a visual alert and rapidly beeps.

See *Forward Collision Alert (FCA) System* ⇨ *188*.

Lane Departure Warning (LDW)

If equipped, LDW may help avoid unintentional lane departures at speeds of 56 km/h (35 mph) or greater. LDW uses a camera sensor to detect the lane markings. The LDW light, , is green if a lane marking is detected. If the vehicle departs the lane without using a turn signal in that direction, the light will change to amber and flash. In addition, beeps will sound.

See *Lane Departure Warning (LDW)* ⇨ *192*.

Side Blind Zone Alert (SBZA)

If equipped, SBZA will detect moving vehicles in the next lane over in the vehicle's side blind zone area. When this happens, the SBZA display will light up in the corresponding outside side mirror and will flash if the turn signal is on.

See *Side Blind Zone Alert (SBZA)* ⇨ *190*.

Rear Vision Camera (RVC)

If equipped, RVC displays a view of the area behind the vehicle, on the infotainment display, when the vehicle is shifted into R (Reverse).

See *Rear Vision Camera (RVC)* ⇨ *184*.

Rear Cross Traffic Alert (RCTA) System

If equipped, the RCTA system uses a triangle with an arrow on the infotainment display to warn of traffic behind your vehicle that may cross your vehicle's path while in R (Reverse). In addition, beeps will sound.

See “Rear Cross Traffic Alert (RCTA)” under *Rear Vision Camera (RVC)* ⇨ *184*.

Parking Assist

If available, Front and Rear Parking Assist (FRPA) uses sensors on the front and rear bumpers to detect objects while parking the vehicle. It operates at speeds less than 8 km/h (5 mph). FRPA uses audio beeps to provide distance and system information.

Keep the sensors on the vehicle's front and rear bumpers clean to ensure proper operation.

See *Parking Assist* ⇨ *186*.

Power Outlets

Power Outlet 110/120 Volt Alternating Current

If equipped, this power outlet is on the rear of the center console. It can be used to plug in electrical equipment that uses a maximum limit of 150 watts.

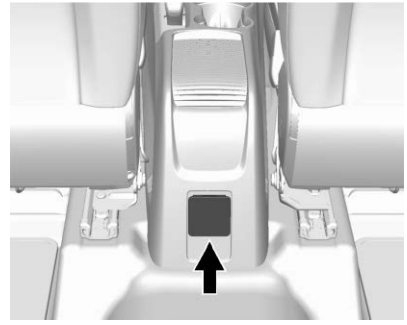

An indicator light on the outlet turns on to show it is in use. The light comes on when the ignition is on and equipment requiring less than 150 watts is plugged into the outlet, and no system fault is detected.

The indicator light does not come on when the ignition is off or if the equipment is not fully seated into the outlet.

See *Power Outlets* ⇨ *107*.

Universal Remote System

If equipped, this system provides a way to replace up to three remote control transmitters used to activate devices such as garage door openers, security systems, and home automation devices.

Read the instructions completely before attempting to program the Universal Remote system. Because of the steps involved, it may be helpful to have another person available to assist you with programming the Universal Remote system.

See *Universal Remote System* ⇨ *134*.

Sunroof

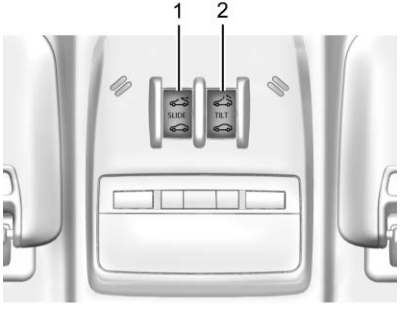

If equipped, the sunroof only operates when the ignition is on or Retained Accessory Power (RAP) is active. See *Retained Accessory Power (RAP)* ⇨ *171*.

Slide Switch

Express-Open/Express Close : Press and release SLIDE (1) at the second detent to express-open the sunroof. Press and release (1) at the second detent to express-close the sunroof. Press the switch again to stop the movement.

Open/Close (Manual Mode) : Press and hold SLIDE (1) at the first detent to open the sunroof. Press and hold (1) at the first detent to close the sunroof. Release the switch to stop the movement.

Tilt Switch

Vent : Press and hold TILT (2) to vent the sunroof. Press and hold (2) to close the sunroof vent.

The sunshade opens automatically with the sunroof, but must be manually closed.

The sunroof will not operate if the vehicle has an electrical failure.

The sunroof has an automatic reversal system feature. See *Sunroof* ⇨ *45*.

Performance and Maintenance

Traction Control/ Electronic Stability Control

The Traction Control System (TCS) limits wheel spin. The system is on when the vehicle is started.

The StabiliTrak system assists with directional control of the vehicle in difficult driving conditions. The system is on when the vehicle is started.

- To turn off TCS, press and release on the center stack. illuminates in the instrument cluster and the appropriate DIC may display.
- Press and release again to turn TCS back on.
- To turn off both TCS and StabiliTrak, press and hold until and illuminate in the instrument cluster and the appropriate DIC message may display.
- Press again to turn on both systems.

See *Traction Control/Electronic Stability Control* ⇨ *180*.

Tire Pressure Monitor

This vehicle may have a Tire Pressure Monitor System (TPMS).

The low tire pressure warning light alerts to a significant loss in pressure of one of the vehicle's tires. If the warning light comes on, stop as soon as possible and inflate the tires to the recommended pressure shown on the Tire and Loading Information label. See *Vehicle Load Limits* ⇨ *162*. The warning light will remain on until the tire pressure is corrected.

The low tire pressure warning light may come on in cool weather when the vehicle is first started, and then turn off as the vehicle is driven. This may be an early indicator that the tire pressures are getting low and the tires need to be inflated to the proper pressure.

The TPMS does not replace normal monthly tire maintenance. Maintain the correct tire pressures.

See *Tire Pressure Monitor System* ⇨ *244*.

Fuel

Regular Fuel

Use only unleaded gasoline rated 87 octane or higher in your vehicle. Do not use gasoline with an octane rating lower as it may result in vehicle damage and lower fuel economy. See *Fuel* ⇨ *193*.

E85 or FlexFuel

No E85 or FlexFuel

Gasoline-ethanol fuel blends greater than E15 (15% ethanol by volume), such as E85, cannot be used in this vehicle.

Engine Oil Life System

The engine oil life system calculates engine oil life based on vehicle use and displays the CHANGE ENGINE OIL SOON DIC message when it is necessary to change the engine oil and filter.

Remember, the oil life display must be reset after each oil change. It will not reset itself. Also, be careful not to reset the oil life display accidentally at any time other than when the oil has just been changed. It cannot be reset accurately until the next oil change.

Resetting the Oil Life System

1. Press the MENU button to show Remaining Oil Life on the display. This display shows an estimate of the oil's remaining useful life. If 99% is displayed, that means that 99% of the current oil life remains.
2. To reset the engine oil life system, press the SET/CLR button while the oil life display is active. After a few seconds, there will be a single chime and the oil life will be reset to 100%.

Be careful not to reset the oil life display accidentally at any time other than after the oil is changed. It cannot be reset accurately.

See *Engine Oil Life System* ⇨ *209*.

Driving for Better Fuel Economy

Driving habits can affect fuel mileage. Here are some driving tips to get the best fuel economy possible.

- Avoid fast starts and accelerate smoothly.
- Brake gradually and avoid abrupt stops.
- Avoid idling the engine for long periods of time.
- When road and weather conditions are appropriate, use cruise control.
- Always follow posted speed limits or drive more slowly when conditions require.
- Keep vehicle tires properly inflated.

- Combine several trips into a single trip.
- Replace the vehicle's tires with the same TPC Spec number molded into the tire's sidewall near the size.
- Follow recommended scheduled maintenance.

Roadside Assistance Program

U.S.: 1-800-252-1112

TTY Users (U.S. Only): 1-888-889-2438

Canada: 1-800-268-6800

New Buick owners are automatically enrolled in the Roadside Assistance Program.

See *Roadside Assistance Program* ⇨ *296*.

Keys, Doors, and Windows

Keys and Locks
Keys 26
Remote Keyless Entry (RKE) System 27
Remote Keyless Entry (RKE) System Operation 27
Remote Vehicle Start 33
Door Locks 35
Power Door Locks 36
Delayed Locking 36
Automatic Door Locks 36
Lockout Protection 36
Safety Locks 37

Doors
Liftgate 38

Vehicle Security
Vehicle Security 39
Vehicle Alarm System 39
Immobilizer 40
Immobilizer Operation 40

Exterior Mirrors
Convex Mirrors 41
Power Mirrors 41
Folding Mirrors 41
Heated Mirrors 41
Reverse Tilt Mirrors 41

Interior Mirrors
Interior Rearview Mirrors 42
Manual Rearview Mirror 42
Automatic Dimming Rearview Mirror 42

Windows
Windows 43
Power Windows 43
Sun Visors 45

Roof
Sunroof 45

Keys and Locks

Keys

⚠ Warning

Leaving children in a vehicle with a Remote Keyless Entry (RKE) transmitter is dangerous and children or others could be seriously injured or killed. They could operate the power windows or other controls or make the vehicle move. The windows will function with the RKE transmitter in the vehicle, and children or others could be caught in the path of a closing window. Do not leave children in a vehicle with an RKE transmitter.

The key that is part of the Remote Keyless Entry (RKE) transmitter can be used for all locks.

To remove the key, press the button on the back of the transmitter, and pull the key out. Never pull the key out without pressing the button.

See your dealer if a new key is needed.

If locked out of the vehicle, see *Roadside Assistance Program* ⇨ *296*.

With an active OnStar service plan, an OnStar Advisor may remotely unlock the vehicle. See *OnStar Overview* ⇨ *306*.

Remote Keyless Entry (RKE) System

See *Radio Frequency Statement* ⇨ *302*.

If there is a decrease in the Remote Keyless Entry (RKE) operating range:

- Check the distance. The transmitter may be too far from the vehicle.
- Check the location. Other vehicles or objects may be blocking the signal.
- Check the transmitter's battery. See “Battery Replacement” later in this section.
- If the transmitter is still not working correctly, see your dealer or a qualified technician for service.

Remote Keyless Entry (RKE) System Operation

The Keyless Access system allows for vehicle entry when the Remote Keyless Entry (RKE) transmitter is within 1 m (3 ft). See “Keyless Access Operation” later in this section.

The RKE transmitter may work up to 60 m (197 ft) away from the vehicle.

Other conditions can impact the performance of the transmitter. See *Remote Keyless Entry (RKE) System* ⇨ *27*.

With Remote Start Shown

The following may be available:

: Press to lock all doors and, if equipped, the locking fuel door.

The hazard warning flashers may flash and/or the horn may sound on the second press to indicate locking. See *Vehicle Personalization* ⇨ *128*.

If the driver door is open when is pressed and the feature is enabled through vehicle personalization, all doors will lock and then the driver door will unlock. See *Vehicle Personalization* ⇨ *128*.

Pressing may also arm the theft-deterrent system. See *Vehicle Alarm System* ⇨ *39*.

: Press to unlock the driver door. Press again within five seconds to unlock all doors. The RKE transmitter can be programmed to unlock all doors on the first button press. See *Vehicle Personalization* ⇨ *128*.

The hazard warning flashers will flash to indicate unlocking. See *Vehicle Personalization* ⇨ *128*.

Pressing will disarm the theft-deterrent system. See *Vehicle Alarm System* ⇨ *39*.

If equipped will also unlock the fuel door.

: Press and release one time to initiate vehicle locator. The exterior lamps flash and the horn chirps three times.

Press and hold for at least three seconds to sound the panic alarm. The horn sounds and the turn signals flash for 30 seconds, or until is pressed again or the vehicle is started.

: If equipped, press and then press and hold for at least four seconds to start the engine from outside the vehicle using the RKE transmitter. See *Remote Vehicle Start* ⇨ *33*.

Keyless Access Operation

The Keyless Access system lets you lock and unlock the doors and access the liftgate without removing the RKE transmitter from your pocket, purse, briefcase, etc. The RKE transmitter must be within 1 m (3 ft) of the liftgate or door being opened. If the vehicle has this feature, there will be a button on each door handle.

Keyless Access can be programmed to unlock all doors on the first lock/unlock press from the driver door. See *Vehicle Personalization* ⇨ *128*.

If equipped with memory seats, RKE transmitters 1 and 2 are linked to seating positions of memory 1 or 2. See *Memory Seats* ⇨ *51*.

Keyless Unlocking/Locking from the Driver Door

When the doors are locked and the RKE transmitter is within 1 m (3 ft) of the driver door handle, pressing the lock/unlock button on the driver door handle will unlock the driver door. If the lock/unlock button is pressed again within five seconds, all passenger doors will unlock. Pull the door handle to unlatch the door.

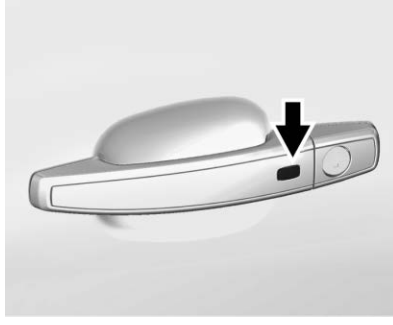

Driver Side Shown, Passenger Side Similar

Pressing the lock/unlock button will cause all doors to lock if any of the following occur:

- It has been more than five seconds since the first lock/unlock button press.
- The lock/unlock button presses were used to unlock all doors.
- Any vehicle door has opened and all doors are now closed.

Keyless Unlocking/Locking from the Passenger Doors

When the doors are locked and the RKE transmitter is within 1 m (3 ft) of the passenger door handle, pressing the lock/unlock button on the passenger door handle will unlock all doors.

Pressing the lock/unlock button will cause all doors to lock if any of the following occur:

- The lock/unlock button was used to unlock all doors.
- Any vehicle door has opened and all doors are now closed.

Passive Locking

If equipped with Keyless Access, the vehicle will lock several seconds after all doors are closed if the vehicle is off and at least one transmitter has been removed or none remain in the vehicle.

If equipped with a locking fuel door, the fuel door will also lock at this time.

If other electronic devices interfere with the RKE transmitter signal, the vehicle may not detect the RKE transmitter inside the vehicle.
If passive locking is enabled, the doors may lock with the RKE transmitter inside the vehicle. Do not leave the RKE transmitter in an unattended vehicle.

To customize the doors to automatically lock when exiting the vehicle, see *Vehicle Personalization* ⇨ *128*.

Temporary Disable of the Passive Locking Feature

Temporarily disable passive locking by pressing and holding 🔒 on the interior door switch with a door open for several seconds, or until three chimes are heard. Passive locking will then remain disabled until 🔒 on the interior door is pressed, or until the vehicle is turned on.

Remote Left In Vehicle Alert

When the vehicle is turned off and an RKE transmitter is left in the vehicle, the horn will chirp three times after all doors are closed.

To turn on or off see *Vehicle Personalization* ⇨ *128*.

Remote No Longer In Vehicle Alert

If the vehicle is on with a door open, and then all doors are closed, the vehicle will check for RKE transmitters inside. If an RKE transmitter is not detected, the DIC will display NO REMOTE DETECTED and the horn will chirp three times. This occurs only once each time the vehicle is driven. To turn on or off see *Vehicle Personalization* ⇨ *128*.

Keyless Liftgate Opening

When the doors are locked, press the touch pad to open the liftgate if the RKE transmitter is within 1 m (3 ft).

Programming Transmitters to the Vehicle

Only RKE transmitters programmed to the vehicle will work. If a transmitter is lost or stolen, a replacement can be purchased and programmed through your dealer. The vehicle can be reprogrammed so that lost or stolen transmitters no longer work. Any remaining transmitters will need to be reprogrammed. Each vehicle can have up to eight transmitters matched to it.

Programming with Recognized Transmitters

A new transmitter can be programmed to the vehicle when there are two recognized transmitters. To program, the vehicle must be off and all of the transmitters, both currently recognized and new, must be with you.

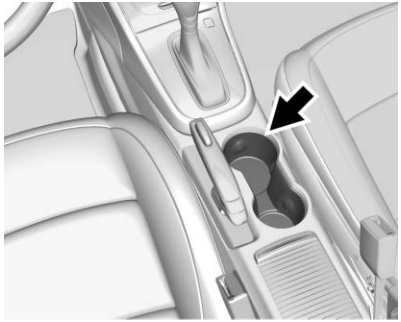

1. Place the two recognized transmitters in the center console front cupholder.
2. Insert the vehicle key of the new transmitter into the key lock cylinder on the outside of the driver door and turn the key to the unlock position five times within 10 seconds.

   The Driver Information Center (DIC) displays READY FOR REMOTE #2, 3, 4 or 5.
3. Remove the two recognized transmitters from the cupholder.
4. Place the new transmitter in the cupholder
5. Press ENGINE START/STOP. When the transmitter is learned, the DIC will show that it is ready to program the next transmitter.
6. Remove the transmitter from the cupholder and press 🔓.

   To program additional transmitters, repeat Steps 4–6.

   When all additional transmitters are programmed, press and hold ENGINE START/STOP for 10 seconds to exit programming mode.

Programming without Recognized Transmitters

If two currently recognized transmitters are not available, follow this procedure to program up to eight transmitters. This feature is not available in Canada. This procedure will take approximately 30 minutes to complete. The vehicle must be off and all of the transmitters to be programmed must be with you.

1. Insert the vehicle key of the transmitter into the key lock cylinder on the outside of the driver door and turn the key to the unlock position five times within 10 seconds.

   The Driver Information Center (DIC) displays REMOTE LEARN PENDING, PLEASE WAIT.
2. Wait for 10 minutes until the DIC displays PRESS ENGINE START BUTTON TO LEARN and then press ENGINE START/STOP.

   The DIC will again show REMOTE LEARN PENDING, PLEASE WAIT.
3. Repeat Step 2 two additional times. After the third time, all previously known transmitters will no longer work with the vehicle. Remaining transmitters can be relearned during the next steps.

The DIC display should now show READY FOR REMOTE # 1.

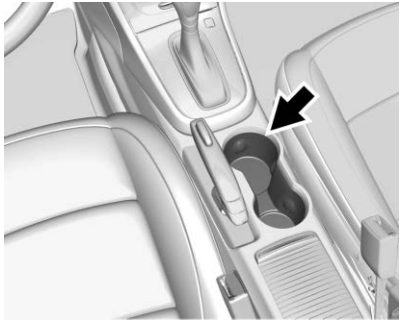

4. Place the new transmitter in the front cupholder.
5. Press ENGINE START/STOP. When the transmitter is learned, the DIC will show that it is ready to program the next transmitter.
6. Remove the transmitter from the cupholder and press 🔓.

   To program additional transmitters, repeat Steps 4–6.

   When all additional transmitters are programmed, press and hold ENGINE START/STOP for 10 seconds to exit programming mode.

Starting the Vehicle with a Low Transmitter Battery

If the transmitter battery is weak, the DIC may display NO REMOTE DETECTED when trying to start the vehicle. The REPLACE BATTERY IN REMOTE KEY message may also be displayed at this time.

To start the vehicle:

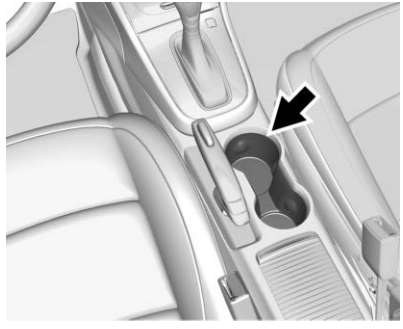

1. Place the transmitter in the center console front cupholder with the buttons facing the front of the vehicle.
2. With the vehicle in P (Park) or N (Neutral), press the brake pedal and ENGINE START/STOP.

   Replace the transmitter battery as soon as possible.

Battery Replacement

Replace the battery if the REPLACE BATTERY IN REMOTE KEY message displays in the DIC.

Caution
When replacing the battery, do not touch any of the circuitry on the transmitter. Static from your body could damage the transmitter.

The battery is not rechargeable. To replace the battery:

1. Press the button on the transmitter and pull the key out.

2. Separate the two halves of the transmitter using a flat tool inserted into the area near the key slot.

3. Remove the battery by pushing on the battery and sliding it toward the bottom of the transmitter.
4. Insert the new battery, positive side facing the back cover. Push the battery down until it is held in place. Replace with a CR2032 or equivalent battery.
5. Snap the battery cover back on to the transmitter.

Remote Vehicle Start

The vehicle may have this feature that allows you to start the engine from outside the vehicle.

: This button will be on the RKE transmitter if the vehicle has remote start.

The climate control system will use the previous settings during a remote start. The rear window defogger may come on during a remote start based on cold ambient conditions. The rear window defogger indicator light does not come on during a remote start. If the

vehicle has heated seats, they may come on during a remote start. See *Heated Front Seats* ⇨ *53*.

Laws in some local communities may restrict the use of remote starters. For example, some laws require a person using remote start to have the vehicle in view. Check local regulations for any requirements.

Other conditions can affect the performance of the transmitter. See *Remote Keyless Entry (RKE) System* ⇨ *27*.

Starting the Vehicle

To start the engine using the remote start feature:

1. Press and release 🔒.
2. Immediately after completing Step 1, press and hold ⟲ for at least four seconds or until the turn signal lamps flash. The turn signal lamps flashing confirms the request to remote start the vehicle has been received.

When the engine starts, the parking lamps will turn on and remain on as long as the engine is running. The doors will be locked and the climate control system may come on.

The engine will continue to run for 15 minutes. After 30 seconds, repeat the steps if a 15-minute extension is desired. Remote start can be extended only once.

Extending Engine Run Time

The engine run time can also be extended by another 15 minutes, if during the first 15 minutes Steps 1 and 2 are repeated while the engine is still running. An extension can be requested 30 seconds after starting. This provides a total of 30 minutes.

The remote start can only be extended once.

When the remote start is extended, the second 15-minute period is added on to the first 15 minutes for a total of 30 minutes.

A maximum of two remote starts, or a remote start with an extension, are allowed between ignition cycles.

The ignition must be turned on and then off before the remote start procedure can be used again.

Canceling a Remote Start

To cancel a remote start, do one of the following:

- Press and hold ⟲ until the parking lamps turn off.
- Turn on the hazard warning flashers.
- Turn the vehicle on and then off.

Conditions in Which Remote Start Will Not Work

The remote vehicle start feature will not operate if:

- A transmitter is in the vehicle.
- The hood is not closed.
- The hazard warning flashers are on.
- The malfunction indicator lamp is on.

- The engine coolant temperature is too high.
- The oil pressure is low.
- Two remote vehicle starts, or a single remote start with an extension, have already been used.
- The vehicle is not in P (Park).

Door Locks

⚠ Warning

Unlocked doors can be dangerous.

- Passengers, especially children, can easily open the doors and fall out of a moving vehicle. The doors can be unlocked and opened while the vehicle is moving. The chance of being thrown out of the vehicle in a crash is increased if the doors are not locked. So, all

(Continued)

Warning (Continued)

passengers should wear seat belts properly and the doors should be locked whenever the vehicle is driven.

- Young children who get into unlocked vehicles may be unable to get out. A child can be overcome by extreme heat and can suffer permanent injuries or even death from heat stroke. Always lock the vehicle whenever leaving it.
- Outsiders can easily enter through an unlocked door when you slow down or stop the vehicle. Locking the doors can help prevent this from happening.

To lock or unlock the doors from the outside:

- Press 🔒 or 🔓 on the Remote Keyless Entry (RKE) transmitter. See *Remote Keyless Entry (RKE) System Operation* ⇨ *27*.
- Use the key in the driver door.

To lock or unlock the doors from inside the vehicle:

- Press 🔒 or 🔓 on the power door lock switch.
- Pulling an interior door handle will unlock the door. Pulling the door handle again unlatches it.

Keyless Access

The RKE transmitter must be within 1 m (3 ft) of the liftgate or door being opened.

Press the button on the door handle to open. See “Keyless Access Operation” under *Remote Keyless Entry (RKE) System Operation* ⇨ *27*.

Free-Turning Locks

The door key lock cylinder turns freely when either the wrong key is used, or the correct key is not fully inserted. The free-turning door lock feature prevents the lock from being forced open. To reset the lock, turn it to the vertical position with the

correct key fully inserted. Remove the key and insert it again. If this does not reset the lock, turn the key halfway around in the cylinder and repeat the reset procedure.

Power Door Locks

: Press to unlock the doors.

: Press to lock the doors.

Delayed Locking

This feature delays the locking of the doors until five seconds after all doors are closed.

Delayed locking can only be turned on when the Unlocked Door Anti-Lockout has been turned off.

When is pressed on the power door lock switch while the door is open, a chime will sound three times indicating delayed locking is active.

The doors will lock automatically five seconds after all doors are closed. If a door is reopened before that time, the five-second timer will reset when all doors are closed again.

Press on the door lock switch again or press on the RKE transmitter to lock the doors immediately.

This feature can also be programmed. See *Vehicle Personalization* ⇨ *128*.

Automatic Door Locks

The doors will lock automatically when all doors are closed, the ignition is on, and the vehicle is shifted out of P (Park).

If a vehicle door is unlocked, and then opened and closed, the doors will lock either when your foot is removed from the brake or the vehicle speed becomes faster than 13 km/h (8 mph).

To unlock the doors:

- Press on the power door lock switch.
- Shift the transmission into P (Park).

Automatic door locking cannot be disabled. Automatic door unlocking can be programmed. See *Vehicle Personalization* ⇨ *128*.

Lockout Protection

If the vehicle is on or in ACC/ACCESSORY and the power door lock switch is pressed with the driver door open, all the doors will lock and only the driver door will unlock.

If the vehicle is off and locking is requested while a door is open, when all doors are closed the vehicle will check for RKE

transmitters inside. If an RKE transmitter is detected and the number of RKE transmitters inside has not reduced, the driver door will unlock and the horn will chirp three times.

Lockout Protection can be manually overridden with the driver door open by pressing and holding 🔒 on the power door lock switch.

Unlocked Door Anti-Lockout

If Unlocked Door Anti-Lockout has been turned on and the vehicle is off, the driver door is open, and locking is requested, all the doors will lock and the driver door will remain unlocked. Push the lock button on the door or the RKE transmitter a second time to lock the driver door. The Unlocked Door Anti-Lockout feature can be turned on or off. See *Vehicle Personalization* ⇨ *128*.

Safety Locks

The rear door safety locks prevent passengers from opening the rear doors from inside the vehicle.

Manual Safety Locks

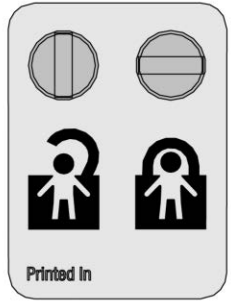

If equipped, the safety lock is located on the inside edge of the rear doors. To use the safety lock:

1. Insert the key into the safety lock slot and turn it so the slot is in the horizontal position.
2. Close the door.
3. Do the same for the other rear door.

To open a rear door when the safety lock is on:

1. Unlock the door by activating the inside handle, by using the power door lock switch, or by using the Remote Keyless Entry (RKE) transmitter.
2. Open the door from the outside.

To cancel the safety lock:

1. Unlock the door and open it from the outside.
2. Insert the key into the safety lock slot and turn it so the slot is in the vertical position. Do the same for the other door.

Doors

Liftgate

⚠ Warning

Exhaust gases can enter the vehicle if it is driven with the liftgate, hatch/trunk open, or with any objects that pass through the seal between the body and the hatch/trunk or liftgate. Engine exhaust contains carbon monoxide (CO) which cannot be seen or smelled. It can cause unconsciousness and even death.

If the vehicle must be driven with the liftgate or hatch/trunk open:

- Close all of the windows.
- Fully open the air outlets on or under the instrument panel.
- Adjust the climate control system to a setting that brings in only outside air

(Continued)

Warning (Continued)

and set the fan speed to the highest setting. See "Climate Control Systems" in the Index.

- If the vehicle is equipped with a power liftgate, disable the power liftgate function.

For more information about carbon monoxide, see *Engine Exhaust* ⇨ *174*.

Caution

To avoid damage to the liftgate or liftgate glass, make sure the area above and behind the liftgate is clear before opening it.

To open the liftgate, press 🔓 on the power door lock switch or press 🔓 on the RKE transmitter to unlock all doors.

See *Power Door Locks* ⇨ *36* and *Remote Keyless Entry (RKE) System Operation* ⇨ *27*.

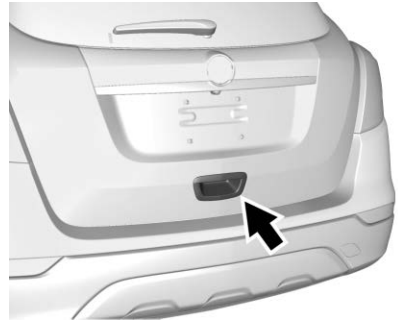

Press the touch pad below the license plate and lift up.

The liftgate may also be opened while the vehicle is locked by pressing the touch pad while the RKE transmitter is within 1 m (3 ft) of the rear of the vehicle.

To close the liftgate, push from the center to ensure that it fully latches.

Vehicle Security

This vehicle has theft-deterrent features; however, they do not make the vehicle impossible to steal.

Vehicle Alarm System

If equipped with an anti-theft alarm system, the indicator light, on the instrument panel near the windshield, shows the status of the system.

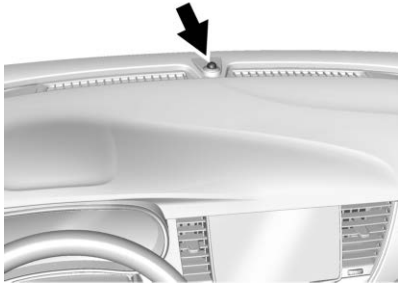

Off : Alarm system is disarmed.

On Solid : Vehicle is secured during the delay to arm the system.

Fast Flast : Vehicle is unsecured. A door, the liftgate, or the hood is open.

Slow Flash : Alarm system is armed.

Arming the Alarm System

1. Turn off the vehicle.
2. Lock the vehicle in one of two ways:
   - Use the RKE transmitter.
   - With a door open, press 🔒 on the interior of the door.
3. After 30 seconds the alarm system will arm, and the indicator light will begin to slowly flash indicating the alarm system is operating.

   Pressing 🔒 on the RKE transmitter a second time will bypass the 30-second delay and immediately arm the alarm system.

The vehicle alarm system will not arm if the doors are locked with the key.

If any door or the hood is opened without first unlocking with the RKE transmitter, the horn will chirp and the lights will flash to indicate pre-alarm. If the vehicle is not started, or the door is not unlocked by pressing 🔓 on the RKE transmitter during the 10-second pre-alarm, the alarm will be activated.

The alarm will also be activated if any door or the the hood is opened without first disarming the system. When the alarm is activated, the turn signals flash and the horn sounds for about 30 seconds. The alarm system will then re-arm to monitor for the next unauthorized event.

Disarming the Alarm System

To disarm the alarm system or turn off the alarm if it has been activated:

- Press 🔓 on the RKE transmitter.
- Start the vehicle.

Avoid setting off the alarm by accident:

- Lock the vehicle after all occupants have exited and all doors are closed.
- Always unlock the vehicle with the RKE transmitter.

Unlocking the driver door with the key will not disarm the system or turn off the alarm.

How to Detect a Tamper Condition

If is pressed and the horn chirps and the lights flash three times, an attempted break-in has occurred while the system was armed.

Immobilizer

See *Radio Frequency Statement* ⇨ *302*.

Immobilizer Operation

This vehicle has a passive theft-deterrent system.

The system does not have to be manually armed or disarmed.

The vehicle is automatically immobilized when the transmitter leaves the vehicle.

The immobilization system is disarmed when ENGINE START/STOP is pressed and a valid transmitter is found in the vehicle.

The security light in the instrument cluster comes on when there is a problem with arming or disarming the theft-deterrent system.

The system has one or more transmitters matched to an immobilizer control unit in your vehicle. Only a correctly matched transmitter will start the vehicle. If the transmitter is ever damaged, you may not be able to start your vehicle.

When trying to start the vehicle, the security light comes on briefly when the ignition is turned on.

If the engine does not start and the security light stays on, there is a problem with the system. Turn the vehicle off and try again.

If the RKE transmitter appears to be undamaged, try another transmitter. Or, you may try placing the transmitter in the front cupholder. See “Starting the Vehicle with a Low Transmitter Battery” under *Remote Keyless Entry (RKE) System Operation* ⇨ *27*.

If the engine does not start with the other transmitter or when the transmitter is in the pocket in the front cupholder, the vehicle needs service. See your dealer who can service the theft-deterrent system and have a new transmitter programmed to the vehicle.

Do not leave the transmitter or device that disarms or deactivates the theft-deterrent system in the vehicle.

Exterior Mirrors

Convex Mirrors

⚠ Warning

A convex mirror can make things, like other vehicles, look farther away than they really are. If you cut too sharply into the right lane, you could hit a vehicle on the right. Check the inside mirror or glance over your shoulder before changing lanes.

The passenger side mirror is convex shaped. A convex mirror's surface is curved so more can be seen from the driver seat.

Power Mirrors

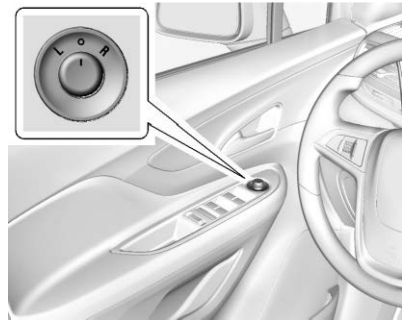

To adjust the mirrors:

1. Turn the selector switch to L (Left) or R (Right) to choose the driver or passenger mirror.
2. Move the control to adjust the mirror.
3. Turn the selector switch to ◯ to deselect the mirror.

Folding Mirrors

Manual Folding Mirrors

These mirrors can be folded inward to prevent damage when going through an automatic car wash. To fold, pull the mirror toward the vehicle. Push the mirror outward to return it to the original position.

Heated Mirrors

This vehicle has heated mirrors:

: Press to heat the mirrors.

See “Rear Window Defogger” under *Climate Control Systems* ⇨ *145*.

Reverse Tilt Mirrors

If equipped with memory seats, the passenger and/or driver mirror tilts to a preselected position when the vehicle is in R (Reverse). This allows the curb to be seen when parallel parking.

The mirror(s) return to the original position when:

- The vehicle is shifted out of R (Reverse), or remains in R (Reverse) for about 30 seconds.
- The ignition is turned off.
- The vehicle is driven in R (Reverse) above a set speed.

To turn this feature on or off, see *Vehicle Personalization* ⇨ *128*.

Interior Mirrors

Interior Rearview Mirrors

Adjust the rearview mirror for a clear view of the area behind your vehicle.

If equipped with OnStar, the vehicle may have three control buttons at the bottom of the mirror. See your dealer for more information about OnStar and how to subscribe to it. See *OnStar Overview* ⇨ *306*.

Do not spray glass cleaner directly on the mirror. Use a soft towel dampened with water.

Manual Rearview Mirror

If equipped with a manual rearview mirror, push the tab forward for daytime use and pull it for nighttime use to avoid glare from the headlamps from behind.

Automatic Dimming Rearview Mirror

If equipped, automatic dimming reduces the glare of headlamps from behind. The dimming feature comes on when the vehicle is started.

Windows

⚠ Warning

Never leave a child, a helpless adult, or a pet alone in a vehicle, especially with the windows closed in warm or hot weather. They can be overcome by the extreme heat and suffer permanent injuries or even death from heat stroke.

The vehicle aerodynamics are designed to improve fuel economy performance. This may result in a pulsing sound when either rear window is down and the front windows are up. To reduce the sound, open either a front window or the sunroof, if equipped.

Power Windows

⚠ Warning

Children could be seriously injured or killed if caught in the path of a closing window. Never leave the Remote Keyless Entry (RKE) transmitter in a vehicle with children. When there are children in the rear seat, use the window lockout switch to prevent operation of the windows. See *Keys* ⇨ *26*.

Power windows work when the ignition is on, in ACC/ACCESSORY, or when Retained Accessory Power (RAP) is active. See *Retained Accessory Power (RAP)* ⇨ *171*.

Using the window switch, press to open or pull to close the window.

The windows may be temporarily disabled if they are used repeatedly within a short time.

Window Lockout

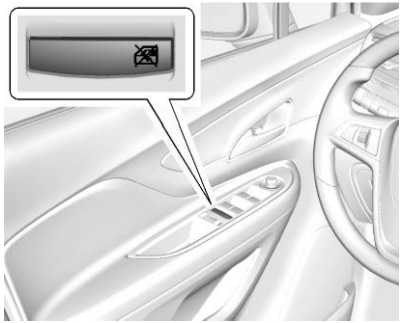

This feature stops the rear passenger windows from working.

- Press to engage the rear window lockout feature. The indicator light is on when engaged.
- Press again to disengage.

Window Express Movement

All windows can be opened without holding the window switch. Press the switch down fully and quickly release to express open the window.

If equipped, pull the window switch up fully and quickly release to express close the window.

Briefly press or pull the window switch in the same direction to stop that window's express movement.

Window Automatic Reversal System

The express-close feature will reverse window movement if it comes in contact with an object. Extreme cold or ice could cause the window to auto-reverse. The window will operate normally after the object or condition is removed.

Automatic Reversal System Override

⚠ Warning

If automatic reversal system override is active, the window will not reverse automatically. You or others could be injured and the window could be damaged. Before using automatic reversal

(Continued)

Warning (Continued)

system override, make sure that all people and obstructions are clear of the window path.

When the engine is on, override the automatic reversal system by pulling and holding the window switch if conditions prevent it from closing.

Programming the Power Windows

Programming may be necessary if the vehicle battery has been disconnected or discharged. If the window is unable to express-up, program each express-close window:

1. Close all doors.
2. Turn the ignition on or to ACC/ACCESSORY.
3. Partially open the window to be programmed. Then close it and continue to pull the switch briefly after the window has fully closed.

4. Open the window and continue to press the switch briefly after the window has fully opened.

Sun Visors

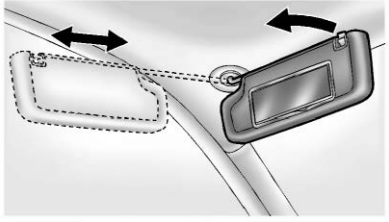

Pull the sun visor down to block glare. If equipped, detach the sun visor from the center mount to pivot to the side window or to extend along the rod.

If equipped, there is a lighted mirror on the sun visor. Lift the cover to open.

Roof

Sunroof

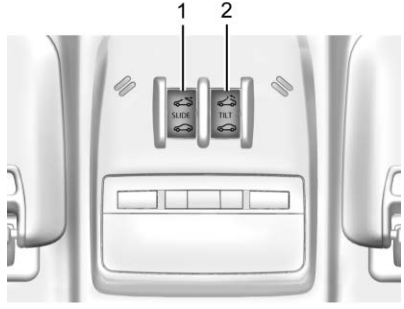

If equipped, the sunroof only operates when the ignition is on or when Retained Accessory Power (RAP) is active. See *Retained Accessory Power (RAP)* ⇨ *171*.

Slide Switch

Express-Open/Express-Close : Press and release SLIDE (1) at the second detent to express-open the sunroof. Press and release (1) at the second detent to express-close the sunroof. Press the switch again to stop the movement.

Open/Close (Manual Mode) : Press and hold SLIDE (1) at the first detent to open the sunroof. Press and hold (1) at the first detent to close the sunroof. Release the switch to stop the movement.

Tilt Switch

Vent : Press and hold TILT (2) to vent the sunroof. Press and hold (2) to close the sunroof vent.

The sunshade opens automatically with the sunroof, but must be manually closed.

The sunroof will not operate if the vehicle has an electrical failure.

Automatic Reversal System

The sunroof has an automatic reversal system that is only active when the sunroof is operated in express-close mode.

If an object is in the path while express closing, the reversal system will detect an object, stop, and open the sunroof again.

If frost or other conditions prevent closing, override the feature by closing the sunroof in manual mode. To stop movement, release the switch.

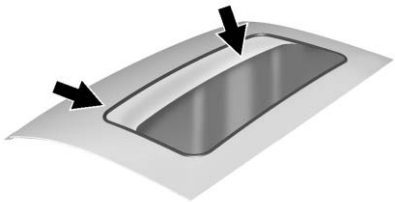

Dirt and debris may collect on the sunroof seal or in the track. This could cause an issue with sunroof operation or noise. It could also plug the water drainage system. Periodically open the sunroof and remove any obstacles or loose debris. Wipe the sunroof seal and roof sealing area using a clean cloth, mild soap, and water. Do not remove grease from the sunroof.

If water is seen dripping into the water drainage system, this is normal.

Seats and Restraints

Head Restraints
Head Restraints 48

Front Seats
Seat Adjustment 49
Power Seat Adjustment 50
Lumbar Adjustment 50
Reclining Seatbacks 50
Memory Seats 51
Front Seat Armrest 53
Heated Front Seats 53
Folding Seatback 54

Rear Seats
Rear Seats 56
Rear Seat Armrest 59

Seat Belts
Seat Belts 59
How to Wear Seat Belts Properly 60
Lap-Shoulder Belt 61
Seat Belt Use During Pregnancy 64
Seat Belt Extender 64
Safety System Check 64
Seat Belt Care 64
Replacing Seat Belt System Parts after a Crash 65

Airbag System
Airbag System 66
Where Are the Airbags? 67
When Should an Airbag Inflate? 69
What Makes an Airbag Inflate? 70
How Does an Airbag Restrain? 70
What Will You See after an Airbag Inflates? 70
Passenger Sensing System . . . 72
Servicing the Airbag-Equipped Vehicle 76
Adding Equipment to the Airbag-Equipped Vehicle 76
Airbag System Check 77
Replacing Airbag System Parts after a Crash 77

Child Restraints
Older Children 78
Infants and Young Children 79
Child Restraint Systems 82
Where to Put the Restraint 83
Lower Anchors and Tethers for Children (LATCH System) 84
Replacing LATCH System Parts After a Crash 91
Securing Child Restraints (With the Seat Belt in the Rear Seat) 92
Securing Child Restraints (With the Seat Belt in the Front Seat) 94

Head Restraints

⚠ Warning

With head restraints that are not installed and adjusted properly, there is a greater chance that occupants will suffer a neck/spinal injury in a crash. Do not drive until the head restraints for all occupants are installed and adjusted properly.

Front Seats

The front seats have adjustable head restraints in the outboard seating positions.

Adjust the head restraint so that the top of the restraint is at the same height as the top of the occupant's head. This position reduces the chances of a neck injury in a crash.

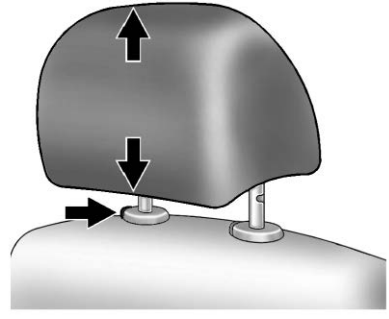

The height of the head restraint can be adjusted. Pull the head restraint up to raise it. Try to move the head restraint to make sure that it is locked in place.

To lower the head restraint, press the button, located on the top of the seatback, and push the head restraint down. Try to move the head restraint after the button is released to make sure that it is locked in place.

The front seat outboard head restraints are not removable.

Rear Seats

The rear seats have head restraints in the outboard seating positions that can be lowered for better visibility when the rear seat is unoccupied.

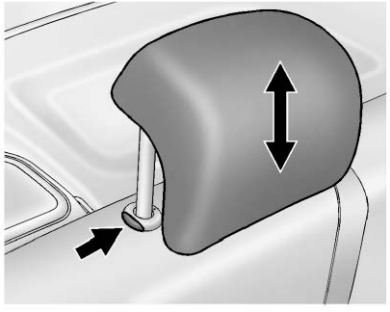

To lower the head restraint, press the button, located on the top of the seatback, and push the head restraint down.

When an occupant is in the seat, always return the head restraint to the upright position. Pull the head restraint up and push it rearward until it locks into place. Push and pull on the head restraint to make sure that it is locked.

If you are installing a child restraint in the rear seat, see “Securing a Child Restraint Designed for the LATCH System” under *Lower Anchors and Tethers for Children (LATCH System)* ⇨ *84*.

Front Seats

Seat Adjustment

⚠ Warning

You can lose control of the vehicle if you try to adjust a driver seat while the vehicle is moving. Adjust the driver seat only when the vehicle is not moving.

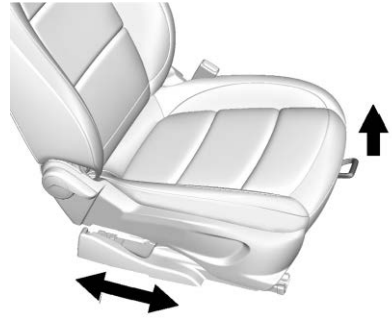

To adjust a manual seat:

1. Pull the handle at the front of the seat.

2. Slide the seat to the desired position and release the handle.
3. Try to move the seat back and forth to be sure it is locked in place.

Power Seat Adjustment

To adjust a power seat:

- Move the seat forward or rearward by sliding the control forward or rearward.
- Raise or lower the front part of the seat cushion by moving the front of the control up or down.
- Raise or lower the entire seat by moving the rear of the control up or down.

To adjust the seatback, see *Reclining Seatbacks* ⇨ *50*.

To adjust the lumbar support, see *Lumbar Adjustment* ⇨ *50*.

Lumbar Adjustment

If available, press the front or rear of the switch to increase or decrease lumbar support. Release the switch when the desired level of support is reached.

Reclining Seatbacks

⚠ Warning

If either seatback is not locked, it could move forward in a sudden stop or crash. That could cause injury to the person sitting there. Always push and pull on the seatbacks to be sure they are locked.

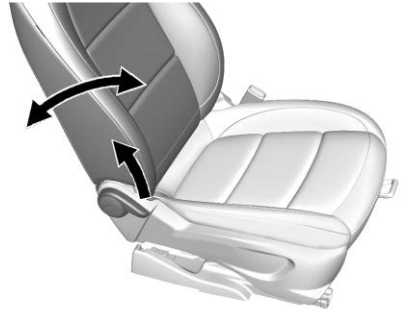

Manual Seat Shown, Power Seat Similar

To recline the seatback:

1. Lift the lever.

   If necessary, move the seat belt out of the way to access the lever.

2. Move the seatback to the desired position, then release the lever to lock the seatback in place.

3. Push and pull on the seatback to make sure it is locked.

To return the seatback to an upright position:

1. Lift the lever fully without applying pressure to the seatback, and the seatback returns to the upright position.

2. Push and pull on the seatback to make sure it is locked.

⚠ Warning

Sitting in a reclined position when the vehicle is in motion can be dangerous. Even when buckled up, the seat belts cannot do their job.

The shoulder belt will not be against your body. Instead, it will be in front of you. In a crash, you could go into it, receiving neck or other injuries.

The lap belt could go up over your abdomen. The belt forces would be there, not at your pelvic bones. This could cause serious internal injuries.

For proper protection when the vehicle is in motion, have the seatback upright. Then sit well back in the seat and wear the seat belt properly.

Do not have a seatback reclined if the vehicle is moving.

Memory Seats

If equipped, the MEM, 1, and 2 buttons on the outboard side of the driver seat are used to manually save and recall the driver seat and outside mirror positions. These manually stored positions are referred to as Button Memory positions.

The vehicle will also automatically save driver seat and outside mirror positions to the current driver Remote Keyless Entry (RKE) transmitter when the ignition is turned off. These automatically stored positions are referred to as RKE Memory positions. See *Remote Keyless Entry (RKE) System Operation* ⇨ *27*.

Storing Button Memory Positions

To save positions into Button Memory:

1. Adjust the driver seat and outside mirrors to the desired driving positions.
2. Press and hold MEM (Memory) and 1 at the same time until a beep sounds.
3. Repeat Steps 1 and 2 for a second driver using 2.

Recalling Button Memory Positions

To recall the Button Memory positions, press and hold 1 or 2. The driver seat and outside mirrors move to the positions stored to those buttons when pressed. Releasing 1 or 2 before the stored positions are reached stops the recall.

If something has blocked the driver seat while recalling a memory position, the recall may stop. Remove the obstruction; then press and hold the appropriate manual control for the memory item that is not recalling for two seconds. Try recalling the memory position again by pressing the appropriate memory button. If the memory position is still not recalling, see your dealer for service.

Recalling RKE Memory Positions

The RKE memory feature can recall the driver seat and outside mirrors to previously stored RKE Memory positions when entering the vehicle.

Every time the ignition is turned off, the positions of the driver seat and outside mirrors are automatically stored to the RKE transmitter that was used to start the vehicle. These positions and settings are called RKE Memory positions and may be different than the previously mentioned Button Memory positions saved to the 1 or 2 buttons.

- On vehicles with RKE, press 🔓 on the RKE transmitter and open the driver door.
- On vehicles with Keyless Access, press the lock/unlock button on the outside driver door handle and open the door. The RKE transmitter must be present for the recall to activate.
- If the driver door is already open, press 🔓 on the RKE transmitter to activate the recall.

This feature can be turned on or off. See *Vehicle Personalization* ⇨ *128*.

To stop recall movement, press one of the memory, power mirror, or power seat controls.

If something has blocked the driver seat while recalling a memory position, the recall may stop. Remove the obstruction; then press and hold the appropriate manual control for the memory item that is not recalling for two seconds. Try recalling the memory position again by opening the driver door and pressing the RKE transmitter button. If the memory position is still not recalling, see your dealer for service.

Easy Exit Driver Seat

This feature moves the seat rearward allowing the driver more room to exit the vehicle.

To activate, turn off the ignition and open the driver door. If the driver door is already open, turning off the ignition will activate the recall.

This feature can be turned on or off. See *Vehicle Personalization* ⇨ *128*.

To stop recall movement, press one of the memory, power mirror, or power seat controls.

If something has blocked the driver seat while recalling the exit position, the recall may stop. Remove the obstruction; then press and hold the power seat control rearward for two seconds. Try recalling the exit position again. If the exit position is still not recalling, see your dealer for service.

Front Seat Armrest

There is an armrest on the inboard side of the driver seat. To raise or lower the armrest, push up or pull down on the armrest.

Heated Front Seats

⚠ Warning

If temperature change or pain to the skin cannot be felt, the seat heater may cause burns. To reduce the risk of burns, use care

(Continued)

Warning (Continued)

when using the seat heater, especially for long periods of time. Do not place anything on the seat that insulates against heat, such as a blanket, cushion, cover, or similar item. This may cause the seat heater to overheat. An overheated seat heater may cause a burn or may damage the seat.

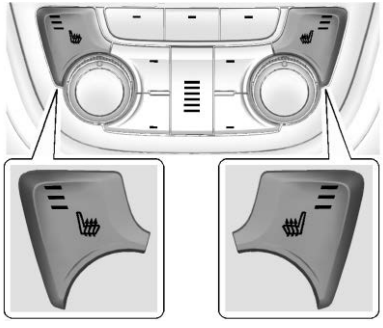

If equipped, the controls are on the climate control panel. The engine must be running to operate the heated seats.

Press or to heat the driver or passenger seat cushion and seatback.

Press the control once for the highest setting. With each press of the control, the heated seat will change to the next lower setting, and then the off setting. Three lights indicate the highest setting and one light the lowest.

The passenger seat may take longer to heat up.

Remote Start Heated Seats

When it is cold outside, the heated seats can be turned on automatically during a remote vehicle start. The heated seats will be canceled when the ignition is turned on. Press the heated seat controls to use the heated seats after the vehicle is started.

The heated seat indicator lights on the control do not turn on during a remote start.

The temperature performance of an unoccupied seat may be reduced. This is normal.

The heated seats will not turn on during a remote start unless the heated seat feature is enabled in the vehicle personalization menu. See *Remote Vehicle Start* ⇨ *33* and *Vehicle Personalization* ⇨ *128*.

Folding Seatback

The front passenger seatback folds flat.

⚠ Warning

If you fold the seatback forward to carry longer objects, such as skis, be sure any such cargo is not near an airbag. In a crash, an inflating airbag might force that object toward a person. This could cause severe injury or even

(Continued)

Warning (Continued)

death. Secure objects away from the area in which an airbag would inflate. For more information, see *Where Are the Airbags?* ⇨ *67* and *Vehicle Load Limits* ⇨ *162*.

⚠ Warning

Things you put on this seatback can strike and injure people in a sudden stop or turn, or in a crash. Remove or secure all items before driving.

To fold the seatback:

1. Lower the head restraint all the way. See *Head Restraints* ⇨ *48*.
2. Move the seat as far back as possible. See *Seat Adjustment* ⇨ *49*.

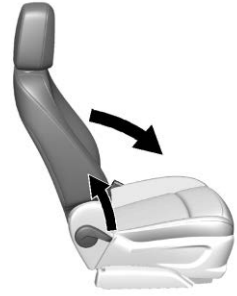

3. Lift the lever fully and fold the seatback forward.

   If necessary, move the seat belt out of the way to access the lever.
4. Continue lowering the seatback until it is completely folded and locks in place.

To raise the seatback:

1. Lift the lever fully to unlock the seatback. Then, raise the seatback and push it rearward until it re-engages.
2. Push and pull on the seatback to make sure it is locked in place.

⚠ Warning

If either seatback is not locked, it could move forward in a sudden stop or crash. That could cause injury to the person sitting there. Always push and pull on the seatbacks to be sure they are locked.

Rear Seats

Folding the Seatback

Either side of the seatback can be folded down for more cargo space. Fold a seatback only when the vehicle is not moving.

Caution

Folding a rear seat with the seat belts still fastened may cause damage to the seat or the seat belts. Always unbuckle the seat belts and return them to their normal stowed position before folding a rear seat.

Caution

Folding the rear seatback prior to tilting the seat cushion forward may damage the rear seat. Always tilt the rear seat cushion forward before folding the seatback.

To fold a seatback down:

1. Make sure the floor area in front of the rear seats is clear.
2. Fully lower the head restraint. See *Head Restraints* ⇨ *48*.
3. Slide the front seats forward and place the front seatbacks in the upright position. See *Seat Adjustment* ⇨ *49* and *Reclining Seatbacks* ⇨ *50*.

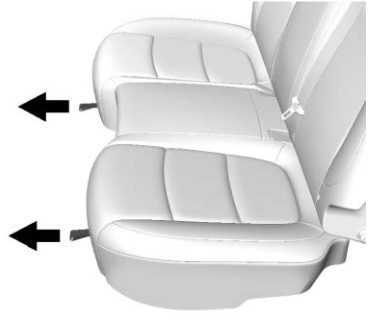

4. Pull the strap on the front edge of the rear seat cushion to release the cushion. Tilt the seat cushion forward toward the front of the vehicle.

   The seat cushion must be tilted forward before the seatback is folded down. Otherwise, the seatback will not fold down properly.

Rear Seat with Retainer Hook on the Seatback

5. Make sure the seat belt is in the retainer hook on top of the seatback, if equipped.

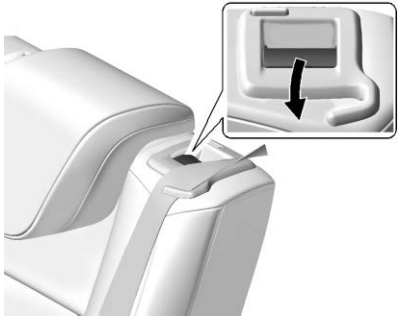

6. Reach under the belt and pull the lever on top of the seatback to unlock the seatback.

   A tab near the seatback lever raises when the seatback is unlocked.

7. Fold the seatback forward and down.

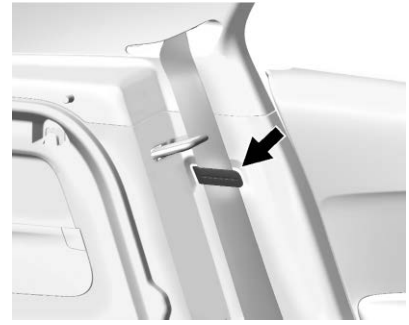

Seat Belt Clip on Side Trim

8. Place the outboard seat belt in the seat belt clip (if equipped) on the side trim of the vehicle.
9. Repeat Steps 1–8 for the other seatback and seat cushion, if desired.

Raising the Seatback

⚠ Warning

If either seatback is not locked, it could move forward in a sudden stop or crash. That could cause

(Continued)

Warning (Continued)

injury to the person sitting there. Always push and pull on the seatbacks to be sure they are locked.

⚠ Warning

A seat belt that is improperly routed, not properly attached, or twisted will not provide the protection needed in a crash. The person wearing the belt could be seriously injured. After raising the rear seatback, always check to be sure that the seat belts are properly routed and attached, and are not twisted.

To return the rear seatback to the normal seating position:

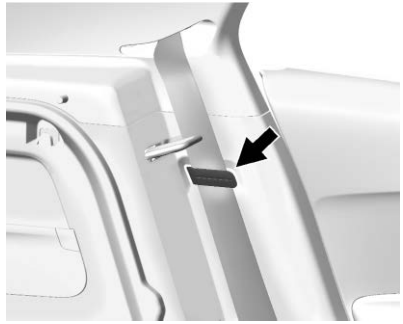

Seat Belt Clip on Side Trim

1. Remove the outboard seat belt from the seat belt clip (if equipped) on the side trim of the vehicle.
2. Lift the seatback and push it rearward to lock it in place. A tab near the seatback lever retracts when the seatback is locked in place.

   Make sure the seat belts are not pinched by the seatback locking mechanism.

   The center rear seat belt may lock when you raise the seatback. If this happens, let the belt go back all the way and start again. If the seat belt is still locked, try again after pulling the seat cushion out.
3. Push and pull the top of the seatback to be sure it is locked into position.
4. Return the seat cushion to its original position and push down on the front part of the seat cushion until it latches.

   Make sure the seat belts and seat belt buckles are not trapped under the seat cushion and are properly positioned for use.
5. Repeat Steps 1–4 for the other seatback and seat cushion, if necessary.

If additional cargo space is not needed, the seatbacks should be kept in the upright, locked position.

Rear Seat Armrest

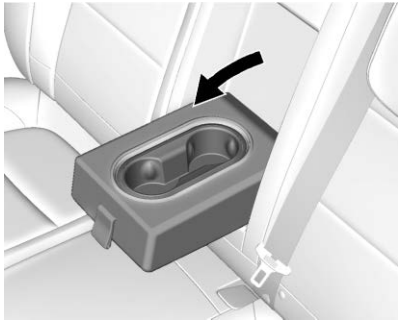

The rear seat has an armrest in the center of the seatback. Lower the armrest to access the cupholders.

To fold, lift the armrest up and push it rearward until it is flush with the seatback.

Seat Belts

This section describes how to use seat belts properly, and some things not to do.

⚠ Warning

Do not let anyone ride where a seat belt cannot be worn properly. In a crash, if you or your passenger(s) are not wearing seat belts, injuries can be much worse than if you are wearing seat belts. You can be seriously injured or killed by hitting things inside the vehicle harder or by being ejected from the vehicle. In addition, anyone who is not buckled up can strike other passengers in the vehicle.

It is extremely dangerous to ride in a cargo area, inside or outside of a vehicle. In a collision, passengers riding in these areas are more likely to be seriously injured or killed. Do not allow

(Continued)

Warning (Continued)

passengers to ride in any area of the vehicle that is not equipped with seats and seat belts.

Always wear a seat belt, and check that all passenger(s) are restrained properly too.

This vehicle has indicators as a reminder to buckle the seat belts. See *Seat Belt Reminders* ⇨ *114*.

Why Seat Belts Work

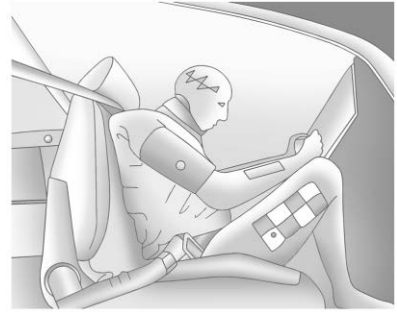

When riding in a vehicle, you travel as fast as the vehicle does. If the vehicle stops suddenly, you keep going until something stops you. It could be the windshield, the instrument panel, or the seat belts!

When you wear a seat belt, you and the vehicle slow down together. There is more time to stop because you stop over a longer distance and, when worn properly, your strongest bones take the forces from the seat belts. That is why wearing seat belts makes such good sense.

Questions and Answers About Seat Belts

Q: Will I be trapped in the vehicle after a crash if I am wearing a seat belt?

A: You *could* be — whether you are wearing a seat belt or not. Your chance of being conscious during and after a crash, so you *can* unbuckle and get out, is *much* greater if you are belted.

Q: If my vehicle has airbags, why should I have to wear seat belts?

A: Airbags are supplemental systems only. They work *with* seat belts — not instead of them. Whether or not an airbag is provided, all occupants still have to buckle up to get the most protection.

Also, in nearly all states and in all Canadian provinces, the law requires wearing seat belts.

How to Wear Seat Belts Properly

This section is only for people of adult size.

There are special things to know about seat belts and children, and there are different rules for smaller children and infants. If a child will be riding in the vehicle, see *Older Children* ⇨ *78* or *Infants and Young Children* ⇨ *79*. Follow those rules for everyone's protection.

It is very important for all occupants to buckle up. Statistics show that unbelted people are hurt more often in crashes than those who are wearing seat belts.

There are important things to know about wearing a seat belt properly.

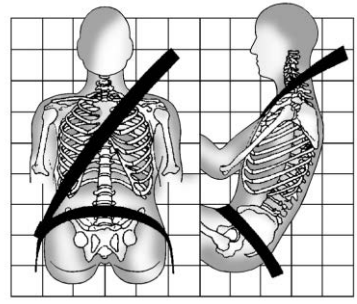

- Sit up straight and always keep your feet on the floor in front of you.
- Always use the correct buckle for your seating position.
- Wear the lap part of the belt low and snug on the hips, just touching the thighs. In a crash,

this applies force to the strong pelvic bones and you would be less likely to slide under the lap belt. If you slid under it, the belt would apply force on your abdomen. This could cause serious or even fatal injuries.

- Wear the shoulder belt over the shoulder and across the chest. These parts of the body are best able to take belt restraining forces. The shoulder belt locks if there is a sudden stop or crash.

⚠ Warning

You can be seriously injured, or even killed, by not wearing your seat belt properly.

- Never allow the lap or shoulder belt to become loose or twisted.
- Never wear the shoulder belt under both arms or behind your back.
- Never route the lap or shoulder belt over an armrest.

Lap-Shoulder Belt

All seating positions in the vehicle have a lap-shoulder belt.

The following instructions explain how to wear a lap-shoulder belt properly.

1. Adjust the seat, if the seat is adjustable, so you can sit up straight. To see how, see “Seats” in the Index.

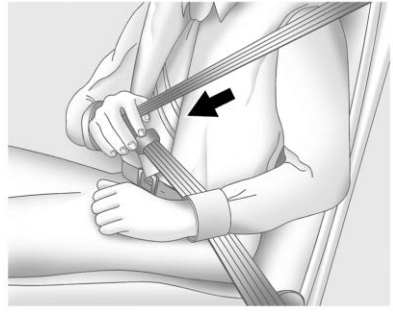

2. Pick up the latch plate and pull the belt across you. Do not let it get twisted.

The lap-shoulder belt may lock if you pull the belt across you very quickly. If this happens, let the belt go back slightly to unlock it. Then pull the belt across you more slowly.

If the shoulder portion of a passenger belt is pulled out all the way, the child restraint locking feature may be engaged. If this happens, let the belt go back all the way and start again.

The rear center seat belt can only be withdrawn from the retractor if the seatback is in the upright locked position.

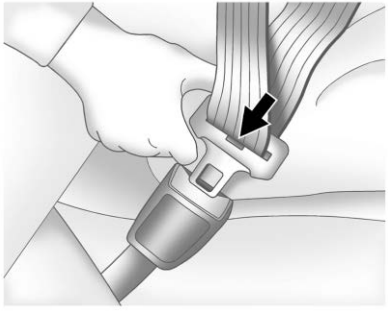

3. Push the latch plate into the buckle until it clicks.

   Pull up on the latch plate to make sure it is secure. If the belt is not long enough, see *Seat Belt Extender* ⇨ *64*.

   Position the release button on the buckle so that the seat belt could be quickly unbuckled if necessary.

4. If equipped with a shoulder belt height adjuster, move it to the height that is right for you. See “Shoulder Belt Height Adjuster” later in this section for instructions on use and important safety information.

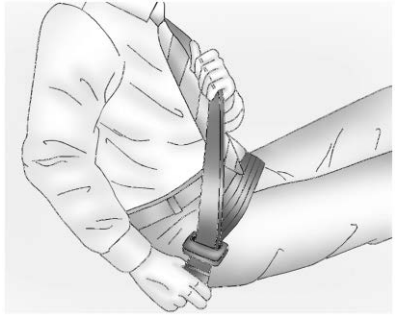

5. To make the lap part tight, pull up on the shoulder belt.

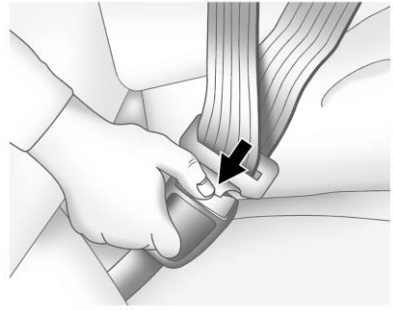

To unlatch the belt, push the button on the buckle. The belt should return to its stowed position.

Always stow the seat belt slowly. If the seat belt webbing returns quickly to the stowed position, the retractor may lock and cannot be pulled out. If this happens, pull the seat belt straight out firmly to unlock the webbing, and then release it. If the webbing is still locked in the retractor, see your dealer.

Before a door is closed, be sure the seat belt is out of the way. If a door is slammed against a seat belt, damage can occur to both the seat belt and the vehicle.

Shoulder Belt Height Adjuster

The vehicle has a shoulder belt height adjuster for the driver and front outboard passenger seating positions.

Adjust the height so the shoulder portion of the belt is on the shoulder and not falling off of it. The belt should be close to, but not contacting, the neck. Improper shoulder belt height adjustment could reduce the effectiveness of the seat belt in a crash. See *How to Wear Seat Belts Properly* ⇨ *60*.

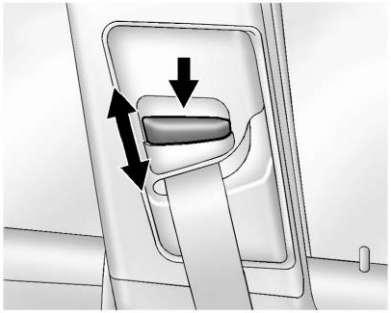

To move the shoulder belt height adjuster down, push down on the release button and move the height adjuster to the desired position. You can move the height adjuster up by pushing up on the shoulder belt guide.

After the adjuster is set to the desired position, try to move it down without pushing the release button to make sure it has locked into position.

Seat Belt Pretensioners

This vehicle has seat belt pretensioners for the front outboard occupants. Although the seat belt pretensioners cannot be seen, they are part of the seat belt assembly. They can help tighten the seat belts during the early stages of a moderate to severe frontal, near frontal, or rear crash if the threshold conditions for pretensioner activation are met. Seat belt pretensioners can also help tighten the seat belts in a side crash or a rollover event.

Pretensioners work only once. If the pretensioners activate in a crash, the pretensioners and probably other parts of the vehicle's seat belt system will need to be replaced. See *Replacing Seat Belt System Parts after a Crash* ⇨ *65*.

Do not sit on the outboard seat belt while entering or exiting the vehicle or at any time while sitting in the seat. Sitting on the seat belt can damage the webbing and hardware.

Rear Seat Belt Comfort Guides

Rear seat belt comfort guides may provide added seat belt comfort for older children who have outgrown booster seats and for some adults. When installed on a shoulder belt, the comfort guide positions the belt away from the neck and head.

Comfort guides are available through your dealer for the rear outboard seating positions. Instructions are included with the guide.

Seat Belt Use During Pregnancy

Seat belts work for everyone, including pregnant women. Like all occupants, they are more likely to be seriously injured if they do not wear seat belts.

A pregnant woman should wear a lap-shoulder belt, and the lap portion should be worn as low as possible, below the rounding, throughout the pregnancy.

The best way to protect the fetus is to protect the mother. When a seat belt is worn properly, it is more likely that the fetus will not be hurt in a crash. For pregnant women, as for anyone, the key to making seat belts effective is wearing them properly.

Seat Belt Extender

If the vehicle's seat belt will fasten around you, you should use it.

But if a seat belt is not long enough, your dealer will order you an extender. When you go in to order it, take the heaviest coat you will wear, so the extender will be long enough for you. To help avoid personal injury, do not let someone else use it, and use it only for the seat it is made to fit. The extender has been designed for adults. Never use it for securing child restraints. For more information on the proper use and fit of seat belt extenders see the instruction sheet that comes with the extender.

Safety System Check

Periodically check the seat belt reminder, seat belts, buckles, latch plates, retractors, shoulder belt height adjusters (if equipped), and seat belt anchorages to make sure they are all in working order. Look for any other loose or damaged seat belt system parts that might keep a seat belt system from performing properly. See your dealer to have it repaired. Torn or frayed seat belts may not protect you in a crash. They can rip apart under impact forces. If a belt is torn or frayed, have it replaced immediately.

Make sure the seat belt reminder light is working. See *Seat Belt Reminders* ⇨ *114*.

Keep seat belts clean and dry. See *Seat Belt Care* ⇨ *64*.

Seat Belt Care

Keep belts clean and dry.

⚠ Warning

Do not bleach or dye seat belt webbing. It may severely weaken the webbing. In a crash, they might not be able to provide adequate protection. Clean and rinse seat belt webbing only with mild soap and lukewarm water. Allow the webbing to dry.

Seat belts should be properly cared for and maintained.

Seat belt hardware should be kept dry and free of dust or debris. As necessary exterior hard surfaces and seat belt webbing may be lightly cleaned with mild soap and water. Ensure there is not excessive dust or debris in the mechanism. If dust or debris exists in the system please see the dealer. Parts may need to be replaced to ensure proper functionality of the system.

Replacing Seat Belt System Parts after a Crash

⚠ Warning

A crash can damage the seat belt system in the vehicle. A damaged seat belt system may not properly protect the person using it, resulting in serious injury or even death in a crash. To help make sure the seat belt systems are working properly after a crash, have them inspected and any necessary replacements made as soon as possible.

After a minor crash, replacement of seat belts may not be necessary. But the seat belt assemblies that were used during any crash may have been stressed or damaged. See your dealer to have the seat belt assemblies inspected or replaced.

New parts and repairs may be necessary even if the seat belt system was not being used at the time of the crash.

Have the seat belt pretensioners checked if the vehicle has been in a crash, or if the airbag readiness light stays on after you start the vehicle or while you are driving. See *Airbag Readiness Light* ⇨ *115*.

Airbag System

The vehicle has the following airbags:

- A frontal airbag for the driver
- A frontal airbag for the front outboard passenger
- A seat-mounted side impact airbag for the driver
- A seat-mounted side impact airbag for the front outboard passenger
- A roof-rail airbag for the driver and the passenger seated directly behind the driver
- A roof-rail airbag for the front outboard passenger and the passenger seated directly behind the front outboard passenger

The vehicle may have the following airbags:

- A knee airbag for the driver
- A knee airbag for the front outboard passenger
- Seat-mounted side impact airbags for the second row outboard passengers

All vehicle airbags have the word AIRBAG on the trim or on a label near the deployment opening.

For frontal airbags, the word AIRBAG is on the center of the steering wheel for the driver and on the instrument panel for the front outboard passenger.

For knee airbags, the word AIRBAG is on the lower part of the instrument panel.

For seat-mounted side impact airbags, the word AIRBAG is on the side of the seatback closest to the door.

For roof-rail airbags, the word AIRBAG is on the ceiling or trim.

Airbags are designed to supplement the protection provided by seat belts. Even though today's airbags are also designed to help reduce the risk of injury from the force of an inflating bag, all airbags must inflate very quickly to do their job.

Here are the most important things to know about the airbag system:

⚠ Warning

You can be severely injured or killed in a crash if you are not wearing your seat belt, even with airbags. Airbags are designed to work with seat belts, not replace them. Also, airbags are not designed to inflate in every crash. In some crashes seat belts are the only restraint. See *When Should an Airbag Inflate?* ⇨ *69*.

Wearing your seat belt during a crash helps reduce your chance of hitting things inside the vehicle or being ejected from it. Airbags are “supplemental restraints” to the seat belts. Everyone in the vehicle should wear a seat belt properly, whether or not there is an airbag for that person.

⚠ Warning

Because airbags inflate with great force and faster than the blink of an eye, anyone who is up against, or very close to, any airbag when it inflates can be seriously injured or killed. Do not sit unnecessarily close to any airbag, as you would be if sitting on the edge of the seat or leaning forward. Seat belts help keep you in position before and during a crash. Always wear a seat belt, even with airbags. The driver should sit as far back as possible while still maintaining control of the vehicle. The seat belts and the front outboard passenger airbags are most effective when you are sitting well back and upright in the seat with both feet on the floor.

(Continued)

Warning (Continued)

Occupants should not lean on or sleep against the door or side windows in seating positions with seat-mounted side impact airbags and/or roof-rail airbags.

⚠ Warning

Children who are up against, or very close to, any airbag when it inflates can be seriously injured or killed. Always secure children properly in the vehicle. To read how, see *Older Children* ⇨ *78* or *Infants and Young Children* ⇨ *79*.

There is an airbag readiness light on the instrument cluster which shows the airbag symbol. The system checks the airbag electrical system for malfunctions. The light tells you if there is an electrical problem. See *Airbag Readiness Light* ⇨ *115* for more information.

Where Are the Airbags?

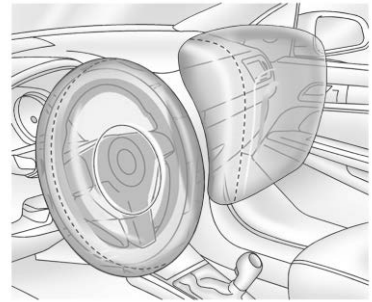

The driver frontal airbag is in the center of the steering wheel.

The front outboard passenger frontal airbag is in the passenger side instrument panel.

The driver knee airbag (if equipped) is below the steering column. The front outboard passenger knee airbag (if equipped) is below the glove box.

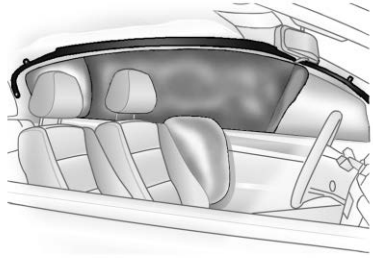

Driver Side Shown, Passenger Side Similar

The seat-mounted side impact airbags for the driver and front outboard passenger are in the side of the seatbacks closest to the door.

The roof-rail airbags for the driver, front outboard passenger, and second row outboard passengers are in the ceiling above the side windows.

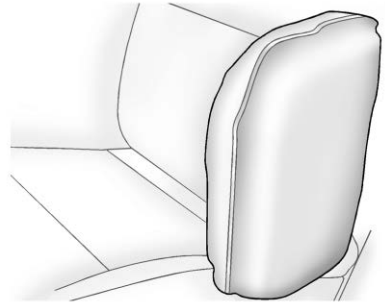

Rear Seat Driver Side Shown, Passenger Side Similar

On vehicles with second row seat-mounted side impact airbags, they are in the side of the seatback closest to the door.

⚠ Warning

If something is between an occupant and an airbag, the airbag might not inflate properly or it might force the object into that person causing severe injury or even death. The path of an

(Continued)

Warning (Continued)

inflating airbag must be kept clear. Do not put anything between an occupant and an airbag, and do not attach or put anything on the steering wheel hub or on or near any other airbag covering.

Do not use seat accessories that block the inflation path of a seat-mounted side impact airbag.

Never secure anything to the roof of a vehicle with roof-rail airbags by routing a rope or tie-down through any door or window opening. If you do, the path of an inflating roof-rail airbag will be blocked.

When Should an Airbag Inflate?

This vehicle is equipped with airbags. See *Airbag System* ⇨ *66*. Airbags are designed to inflate if the impact exceeds the specific airbag system's deployment threshold. Deployment thresholds are used to predict how severe a crash is likely to be in time for the airbags to inflate and help restrain the occupants. The vehicle has electronic sensors that help the airbag system determine the severity of the impact. Deployment thresholds can vary with specific vehicle design.

Frontal airbags are designed to inflate in moderate to severe frontal or near frontal crashes to help reduce the potential for severe injuries, mainly to the driver's or front outboard passenger's head and chest.

Whether the frontal airbags will or should inflate is not based primarily on how fast the vehicle is traveling. It depends on what is hit, the direction of the impact, and how quickly the vehicle slows down.

Frontal airbags may inflate at different crash speeds depending on whether the vehicle hits an object straight on or at an angle, and whether the object is fixed or moving, rigid or deformable, narrow or wide.

Frontal airbags are not intended to inflate during vehicle rollovers, in rear impacts, or in many side impacts.

In addition, the vehicle has advanced technology frontal airbags. Advanced technology frontal airbags adjust the restraint according to crash severity.

Knee airbags (if equipped) are designed to inflate in moderate to severe frontal or near frontal impacts. Knee airbags are not designed to inflate during vehicle rollovers, in rear impacts, or in many side impacts.

Seat-mounted side impact airbags are designed to inflate in moderate to severe side crashes depending on the location of the impact. Seat-mounted side impact airbags are not designed to inflate in frontal impacts, near frontal impacts, rollovers, or rear impacts.

A seat-mounted side impact airbag is designed to inflate on the side of the vehicle that is struck.

Roof-rail airbags are designed to inflate in moderate to severe side crashes depending on the location of the impact. In addition, these roof-rail airbags are designed to inflate during a rollover or in a severe frontal impact. Roof-rail airbags are not designed to inflate in rear impacts. Both roof-rail airbags will inflate when either side of the vehicle is struck, if the sensing system predicts that the vehicle is about to roll over on its side, or in a severe frontal impact.

In any particular crash, no one can say whether an airbag should have inflated simply because of the vehicle damage or repair costs.

What Makes an Airbag Inflate?

In a deployment event, the sensing system sends an electrical signal triggering a release of gas from the inflator. Gas from the inflator fills the airbag causing the bag to break out of the cover. The inflator, the airbag, and related hardware are all part of the airbag module.

For airbag locations, see *Where Are the Airbags?* ⇨ *67*.

How Does an Airbag Restrain?

In moderate to severe frontal or near frontal collisions, even belted occupants can contact the steering wheel or the instrument panel. In moderate to severe side collisions, even belted occupants can contact the inside of the vehicle.

Airbags supplement the protection provided by seat belts by distributing the force of the impact more evenly over the occupant's body.

Rollover capable roof-rail airbags are designed to help contain the head and chest of occupants in the outboard seating positions in the first and second rows. The rollover capable roof-rail airbags are designed to help reduce the risk of full or partial ejection in rollover events, although no system can prevent all such ejections.

But airbags would not help in many types of collisions, primarily because the occupant's motion is not toward those airbags. See *When Should an Airbag Inflate?* ⇨ *69*.

Airbags should never be regarded as anything more than a supplement to seat belts.

What Will You See after an Airbag Inflates?

After the frontal, knee (if equipped), and seat-mounted side impact airbags inflate, they quickly deflate, so quickly that some people may not even realize the airbags inflated. Roof-rail airbags may still be at least partially inflated for some time after they inflate. Some components of the airbag module may be hot for several minutes. For location of the airbags, see *Where Are the Airbags?* ⇨ *67*.

The parts of the airbag that come into contact with you may be warm, but not too hot to touch. There may be some smoke and dust coming from the vents in the deflated airbags. Airbag inflation does not prevent the driver from seeing out of the windshield or being able to steer the vehicle, nor does it prevent people from leaving the vehicle.

⚠ Warning

When an airbag inflates, there may be dust in the air. This dust could cause breathing problems for people with a history of asthma or other breathing trouble. To avoid this, everyone in the vehicle should get out as soon as it is safe to do so. If you have breathing problems but cannot get out of the vehicle after an airbag inflates, then get fresh air by opening a window or a door. If you experience breathing problems following an airbag deployment, you should seek medical attention.

The vehicle has a feature that may automatically unlock the doors, turn on the interior lamps and hazard warning flashers, and shut off the fuel system after the airbags inflate. The feature may also activate, without airbag inflation, after an event that exceeds a predetermined threshold. After turning the ignition off and then on again, the fuel system will return to normal operation; the doors can be locked, the interior lamps can be turned off, and the hazard warning flashers can be turned off using the controls for those features. If any of these systems are damaged in the crash they may not operate as normal.

⚠ Warning

A crash severe enough to inflate the airbags may have also damaged important functions in the vehicle, such as the fuel system, brake and steering systems, etc. Even if the vehicle appears to be drivable after a

(Continued)

Warning (Continued)

moderate crash, there may be concealed damage that could make it difficult to safely operate the vehicle.

Use caution if you should attempt to restart the engine after a crash has occurred.

In many crashes severe enough to inflate the airbag, windshields are broken by vehicle deformation. Additional windshield breakage may also occur from the front outboard passenger airbag.

- Airbags are designed to inflate only once. After an airbag inflates, you will need some new parts for the airbag system. If you do not get them, the airbag system will not be there to help protect you in another crash. A new system will include airbag modules and possibly other parts. The service manual for the vehicle covers the need to replace other parts.

- The vehicle has a crash sensing and diagnostic module which records information after a crash.
  See *Vehicle Data Recording and Privacy* ⇨ *304* and *Event Data Recorders* ⇨ *304*.
- Let only qualified technicians work on the airbag systems. Improper service can mean that an airbag system will not work properly. See your dealer for service.

Passenger Sensing System

The vehicle has a passenger sensing system for the front outboard passenger position. The passenger airbag status indicator will light on the instrument panel when the vehicle is started.

United States

Canada and Mexico

The words ON and OFF, or the symbol for on and off, will be visible during the system check. When the system check is complete, either the word ON or OFF, or the symbol for on or off, will be visible. See *Passenger Airbag Status Indicator* ⇨ *115*.

The passenger sensing system turns off the front outboard passenger frontal airbag and knee airbag (if equipped) under certain conditions. No other airbag is affected by the passenger sensing system.

The passenger sensing system works with sensors that are part of the front outboard passenger seat. The sensors are designed to detect the presence of a properly seated occupant and determine if the front outboard passenger frontal airbag and knee airbag (if equipped) should be allowed to inflate or not.

According to accident statistics, children are safer when properly secured in a rear seat in the correct child restraint for their weight and size.

Whenever possible, children aged 12 and under should be secured in a rear seating position.

Never put a rear-facing child seat in the front. This is because the risk to the rear-facing child is so great if the airbag inflates.

⚠ Warning

A child in a rear-facing child restraint can be seriously injured or killed if the passenger frontal airbag inflates. This is because the back of the rear-facing child restraint would be very close to the inflating airbag. A child in a forward-facing child restraint can be seriously injured or killed if the passenger frontal airbag inflates and the passenger seat is in a forward position.

Even if the passenger sensing system has turned off the front outboard passenger airbag(s), no system is fail-safe. No one can guarantee that an airbag will not deploy under some unusual circumstance, even though the airbag(s) are off.

Never put a rear-facing child restraint in the front seat, even if the airbag is off. If securing a forward-facing child restraint in

(Continued)

Warning (Continued)

the front outboard passenger seat, always move the seat as far back as it will go. It is better to secure child restraints in the rear seat. Consider using another vehicle to transport the child when a rear seat is not available.

The passenger sensing system is designed to turn off the front outboard passenger frontal airbag and knee airbag (if equipped) if:

- The front outboard passenger seat is unoccupied.
- The system determines that an infant is present in a rear-facing infant seat.
- The system determines that a small child is present in a child restraint.
- The system determines that a small child is present in a booster seat.
- A front outboard passenger takes his/her weight off of the seat for a period of time.
- A front outboard passenger seat is occupied by a smaller person, such as a child who has outgrown child restraints.
- There is a critical problem with the airbag system or the passenger sensing system.

When the passenger sensing system has turned off the front outboard passenger frontal airbag and knee airbag (if equipped), the off indicator will light and stay lit as a reminder that the airbags are off. See *Passenger Airbag Status Indicator* ⇨ *115*.

The passenger sensing system is designed to turn on the front outboard passenger frontal airbag and knee airbag (if equipped) anytime the system senses that a person of adult size is sitting properly in the front outboard passenger seat. When the passenger sensing system has allowed the airbags to be enabled,

the on indicator will light and stay lit as a reminder that the airbags are active.

For some children who have outgrown child restraints and for very small adults, the passenger sensing system may or may not turn off the front outboard passenger frontal airbag and knee airbag (if equipped), depending upon the person's seating posture and body build. Everyone in the vehicle who has outgrown child restraints should wear a seat belt properly — whether or not there is an airbag for that person.

⚠ Warning

If the airbag readiness light ever comes on and stays on, it means that something may be wrong with the airbag system. To help avoid injury to yourself or others, have the vehicle serviced right away. See *Airbag Readiness*

(Continued)

Warning (Continued)

Light ⇨ *115* for more information, including important safety information.

If the On Indicator Is Lit for a Child Restraint

If a child restraint has been installed and the on indicator is lit:

1. Turn the vehicle off.
2. Remove the child restraint from the vehicle.
3. Remove any additional items from the seat such as blankets, cushions, seat covers, seat heaters, or seat massagers.
4. Reinstall the child restraint following the directions provided by the child restraint manufacturer and refer to *Securing Child Restraints (With the Seat Belt in the Rear Seat)* ⇨ *92* or *Securing Child Restraints (With the Seat Belt in the Front Seat)* ⇨ *94*.
5. If, after reinstalling the child restraint and restarting the vehicle, the on indicator is still lit, turn the vehicle off. Then slightly recline the vehicle seatback and adjust the seat cushion, if adjustable, to make sure that the vehicle seatback is not pushing the child restraint into the seat cushion. Also make sure the child restraint is not trapped under the vehicle head restraint.
   If this happens, adjust the head restraint. See *Head Restraints* ⇨ *48*.
6. Restart the vehicle.

If the on indicator is still lit, secure the child in the child restraint in a rear seat position in the vehicle, and check with your dealer.

If the Off Indicator Is Lit for an Adult-Sized Occupant

If a person of adult size is sitting in the front outboard passenger seat, but the off indicator is lit, it could be because that person is not sitting properly in the seat. Use the following steps to allow the system to detect that person and enable the front outboard passenger frontal airbag and knee airbag (if equipped):

1. Turn the vehicle off.
2. Remove any additional material from the seat, such as blankets, cushions, seat covers, seat heaters, or seat massagers.
3. Place the seatback in the fully upright position.
4. Have the person sit upright in the seat, centered on the seat cushion, with legs comfortably extended.
5. Restart the vehicle and have the person remain in this position for two to three minutes after the on indicator is lit.

⚠ Warning

If the front outboard passenger airbag is turned off for an adult-sized occupant, the airbag will not be able to inflate and help protect that person in a crash, resulting in an increased risk of serious injury or even death. An adult-sized occupant should not

(Continued)

Warning (Continued)

ride in the front outboard passenger seat, if the passenger airbag off indicator is lit.

Additional Factors Affecting System Operation

Seat belts help keep the passenger in position on the seat during vehicle maneuvers and braking, which helps the passenger sensing system maintain the passenger airbag status. See “Seat Belts” and “Child Restraints” in the Index for additional information about the importance of proper restraint use.

A thick layer of additional material, such as a blanket or cushion, or aftermarket equipment such as seat covers, seat heaters, and seat massagers can affect how well the passenger sensing system operates. We recommend that you not use seat covers or other aftermarket equipment except when approved by GM for your specific

vehicle. See *Adding Equipment to the Airbag-Equipped Vehicle* ⇨ *76* for more information about modifications that can affect how the system operates.

The on indicator may be lit if an object, such as a briefcase, handbag, grocery bag, laptop, or other electronic device is put on an unoccupied seat. If this is not desired, remove the object from the seat.

⚠ Warning

Stowing articles under the passenger seat or between the passenger seat cushion and seatback may interfere with the proper operation of the passenger sensing system.

Servicing the Airbag-Equipped Vehicle

Airbags affect how the vehicle should be serviced. There are parts of the airbag system in several places around the vehicle. Your dealer and the service manual have information about servicing the vehicle and the airbag system. To purchase a service manual, see *Service Publications Ordering Information* ⇨ *301*.

⚠ Warning

For up to 10 seconds after the vehicle is turned off and the battery is disconnected, an airbag can still inflate during improper service. You can be injured if you are close to an airbag when it inflates. Avoid yellow connectors. They are probably part of the airbag system. Be sure to follow proper service procedures, and make sure the person performing work for you is qualified to do so.

Adding Equipment to the Airbag-Equipped Vehicle

Adding accessories that change the vehicle's frame, bumper system, height, front end, or side sheet metal may keep the airbag system from working properly.

The operation of the airbag system can also be affected by changing any parts of the front seats, seat belts, airbag sensing and diagnostic module, steering wheel, instrument panel, inner door seals including the speakers, any of the airbag modules, ceiling or pillar garnish trim, front sensors, side impact sensors, or airbag wiring.

Your dealer and the service manual have information about the location of the airbag sensors, sensing and diagnostic module, and airbag wiring.

In addition, the vehicle has a passenger sensing system for the front outboard passenger position, which includes sensors that are part of the passenger seat. The passenger sensing system may not

operate properly if the original seat trim is replaced with non-GM covers, upholstery, or trim; or with GM covers, upholstery, or trim designed for a different vehicle. Any object, such as an aftermarket seat heater or a comfort-enhancing pad or device, installed under or on top of the seat fabric, could also interfere with the operation of the passenger sensing system. This could either prevent proper deployment of the passenger airbag(s) or prevent the passenger sensing system from properly turning off the passenger airbag(s). See *Passenger Sensing System* ⇨ *72*.

If the vehicle has rollover roof-rail airbags, see *Different Size Tires and Wheels* ⇨ *251* for additional important information.

If you have to modify your vehicle because you have a disability and have questions about whether the modifications will affect the vehicle's airbag system, or if you have questions about whether the airbag system will be affected if the vehicle is modified for any other reason, call Customer Assistance. See *Customer Assistance Offices* ⇨ *294*.

Airbag System Check

The airbag system does not need regularly scheduled maintenance or replacement. Make sure the airbag readiness light is working. See *Airbag Readiness Light* ⇨ *115*.

Caution

If an airbag covering is damaged, opened, or broken, the airbag may not work properly. Do not open or break the airbag coverings. If there are any opened or broken airbag coverings, have the airbag covering and/or airbag module replaced. For the location of the airbags, see *Where Are the Airbags?* ⇨ *67*. See your dealer for service.

Replacing Airbag System Parts after a Crash

⚠ Warning

A crash can damage the airbag systems in the vehicle.
A damaged airbag system may not properly protect you and your passenger(s) in a crash, resulting in serious injury or even death. To help make sure the airbag systems are working properly after a crash, have them inspected and any necessary replacements made as soon as possible.

If an airbag inflates, you will need to replace airbag system parts. See your dealer for service.

If the airbag readiness light stays on after the vehicle is started or comes on when you are driving, the airbag system may not work properly. Have the vehicle serviced right away. See *Airbag Readiness Light* ⇨ *115*.

Child Restraints

Older Children

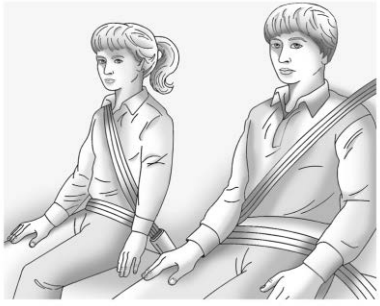

Older children who have outgrown booster seats should wear the vehicle's seat belts.

The manufacturer instructions that come with the booster seat state the weight and height limitations for that booster. Use a booster seat with a lap-shoulder belt until the child passes the fit test below:

- Sit all the way back on the seat. Do the knees bend at the seat edge? If yes, continue. If no, return to the booster seat.
- Buckle the lap-shoulder belt. Does the shoulder belt rest on the shoulder? If yes, continue. If no, try using the rear seat belt comfort guide, if available. See "Rear Seat Belt Comfort Guides" under *Lap-Shoulder Belt* ⇨ *61*. If a comfort guide is not available, or if the shoulder belt still does not rest on the shoulder, then return to the booster seat.
- Does the lap belt fit low and snug on the hips, touching the thighs? If yes, continue. If no, return to the booster seat.
- Can proper seat belt fit be maintained for the length of the trip? If yes, continue. If no, return to the booster seat.

Q: What is the proper way to wear seat belts?

A: An older child should wear a lap-shoulder belt and get the additional restraint a shoulder belt can provide. The shoulder belt should not cross the face or neck. The lap belt should fit snugly below the hips, just touching the top of the thighs. This applies belt force to the child's pelvic bones in a crash. It should never be worn over the abdomen, which could cause severe or even fatal internal injuries in a crash.

Also see "Rear Seat Belt Comfort Guides" under *Lap-Shoulder Belt* ⇨ *61*.

According to accident statistics, children are safer when properly restrained in a rear seating position.

In a crash, children who are not buckled up can strike other people who are buckled up, or can be thrown out of the vehicle. Older children need to use seat belts properly.

⚠ Warning

Never allow more than one child to wear the same seat belt. The seat belt cannot properly spread the impact forces. In a crash, they can be crushed together and seriously injured. A seat belt must be used by only one person at a time.

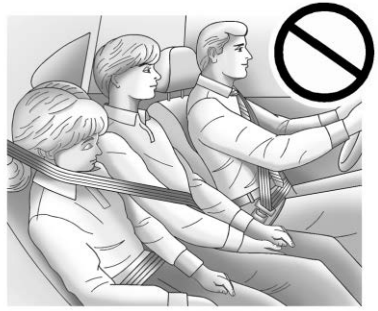

⚠ Warning

Never allow a child to wear the seat belt with the shoulder belt behind their back. A child can be seriously injured by not wearing the lap-shoulder belt properly. In a crash, the child would not be restrained by the shoulder belt. The child could move too far forward increasing the chance of head and neck injury. The child might also slide under the lap belt. The belt force would then be applied right on the abdomen.

(Continued)

Warning (Continued)

That could cause serious or fatal injuries. The shoulder belt should go over the shoulder and across the chest.

Infants and Young Children

Everyone in a vehicle needs protection! This includes infants and all other children. Neither the distance traveled nor the age and size of the traveler changes the

need, for everyone, to use safety restraints. In fact, the law in every state in the United States and in every Canadian province says children up to some age must be restrained while in a vehicle.

⚠ Warning

Children can be seriously injured or strangled if a shoulder belt is wrapped around their neck. The shoulder belt can tighten but cannot be loosened if it is locked. The shoulder belt locks when it is pulled all the way out of the retractor. It unlocks when the shoulder belt is allowed to go all the way back into the retractor, but it cannot do this if it is wrapped around a child's neck. If the shoulder belt is locked and tightened around a child's neck, the only way to loosen the belt is to cut it.

(Continued)

Warning (Continued)

Never leave children unattended in a vehicle and never allow children to play with the seat belts.

Every time infants and young children ride in vehicles, they should have the protection provided by appropriate child restraints. Neither the vehicle's seat belt system nor its airbag system is designed for them.

Children who are not restrained properly can strike other people, or can be thrown out of the vehicle.

⚠ Warning

Never hold an infant or a child while riding in a vehicle. Due to crash forces, an infant or a child will become so heavy it is not possible to hold it during a crash. For example, in a crash at only 40 km/h (25 mph), a 5.5 kg (12 lb)

(Continued)

Warning (Continued)

infant will suddenly become a 110 kg (240 lb) force on a person's arms. An infant or child should be secured in an appropriate restraint.

⚠ Warning

Children who are up against, or very close to, any airbag when it inflates can be seriously injured

(Continued)

Warning (Continued)

or killed. Never put a rear-facing child restraint in the front outboard seat. Secure a rear-facing child restraint in a rear seat. It is also better to secure a forward-facing child restraint in a rear seat. If you must secure a forward-facing child restraint in the front outboard seat, always move the front passenger seat as far back as it will go.

Child restraints are devices used to restrain, seat, or position children in the vehicle and are sometimes called child seats or car seats.

There are three basic types of child restraints:

- Forward-facing child restraints
- Rearward-facing child restraints
- Belt-positioning booster seats

The proper child restraint for your child depends on their size, weight, and age, and also on whether the child restraint is compatible with the vehicle in which it will be used.

For each type of child restraint, there are many different models available. When purchasing a child restraint, be sure it is designed to be used in a motor vehicle. If it is, the restraint will have a label saying that it meets federal motor vehicle safety standards. The restraint manufacturer's instructions that come with the restraint state the weight and height limitations for a particular child restraint. In addition, there are many kinds of restraints available for children with special needs.

⚠ Warning

To reduce the risk of neck and head injury in a crash, infants and toddlers should be secured in a rear-facing child restraint until age two, or until they reach the maximum height and weight limits of their child restraint.

⚠ Warning

A young child's hip bones are still so small that the vehicle's regular seat belt may not remain low on the hip bones, as it should. Instead, it may settle up around the child's abdomen. In a crash, the belt would apply force on a body area that is unprotected by any bony structure. This alone could cause serious or fatal

(Continued)

Warning (Continued)

injuries. To reduce the risk of serious or fatal injuries during a crash, young children should always be secured in appropriate child restraints.

Child Restraint Systems

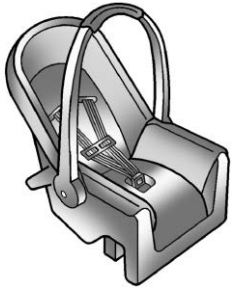

Rear-Facing Infant Restraint

A rear-facing child restraint provides restraint with the seating surface against the back of the infant.

The harness system holds the infant in place and, in a crash, acts to keep the infant positioned in the restraint.

Forward-Facing Child Restraint

A forward-facing child restraint provides restraint for the child's body with the harness.

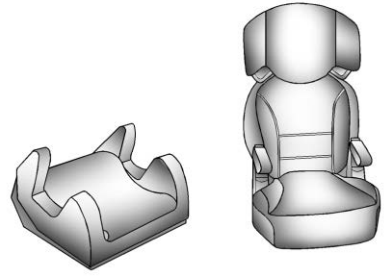

Booster Seats

A belt-positioning booster seat is used for children who have outgrown their forward-facing child restraint. Boosters are designed to improve the fit of the vehicle's seat belt system until the child is large enough for the vehicle seat belts to fit properly without a booster seat. See the seat belt fit test in *Older Children* ⇨ *78*.

Securing an Add-On Child Restraint in the Vehicle

⚠ Warning

A child can be seriously injured or killed in a crash if the child restraint is not properly secured in the vehicle. Secure the child restraint properly in the vehicle using the vehicle's seat belt or LATCH system, following the instructions that came with that child restraint and the instructions in this manual.

To help reduce the chance of injury, the child restraint must be secured in the vehicle. Child restraints must be secured in vehicle seats by lap belts or the lap belt portion of a lap-shoulder belt, or by the LATCH system. See *Lower Anchors and Tethers for Children (LATCH System)* ⇨ *84* for more information. Children can be endangered in a crash if the child restraint is not properly secured in the vehicle.

When securing an add-on child restraint, refer to the instructions that come with the restraint which may be on the restraint itself or in a booklet, or both, and to this manual. The child restraint instructions are important, so if they are not available, obtain a replacement copy from the manufacturer.

Keep in mind that an unsecured child restraint can move around in a collision or sudden stop and injure people in the vehicle. Be sure to properly secure any child restraint in the vehicle — even when no child is in it.

In some areas of the United States and Canada, Certified Child Passenger Safety Technicians (CPSTs) are available to inspect and demonstrate how to correctly use and install child restraints. In the U.S., refer to the National Highway Traffic Safety Administration (NHTSA) website to locate the nearest child safety seat inspection station. For CPST availability in Canada, check with Transport Canada or the Provincial Ministry of Transportation office.

Securing the Child Within the Child Restraint

⚠ Warning

A child can be seriously injured or killed in a crash if the child is not properly secured in the child restraint. Secure the child properly following the instructions that came with that child restraint.

Where to Put the Restraint

According to accident statistics, children and infants are safer when properly restrained in an appropriate child restraint secured in a rear seating position.

Whenever possible, children aged 12 and under should be secured in a rear seating position.

Never put a rear-facing child restraint in the front. This is because the risk to the rear-facing child is so great if the airbag deploys.

⚠ Warning

A child in a rear-facing child restraint can be seriously injured or killed if the front passenger airbag inflates. This is because the back of the rear-facing child restraint would be very close to the inflating airbag. A child in a forward-facing child restraint can be seriously injured or killed if the front passenger airbag inflates and the passenger seat is in a forward position.

Even if the passenger sensing system has turned off the front passenger frontal airbag, no system is fail-safe. No one can guarantee that an airbag will not deploy under some unusual circumstance, even though it is turned off.

(Continued)

Warning (Continued)

Secure rear-facing child restraints in a rear seat, even if the airbag is off. If you secure a forward-facing child restraint in the front seat, always move the front passenger seat as far back as it will go. It is better to secure the child restraint in a rear seat.

See *Passenger Sensing System* ⇨ *72* for additional information.

When securing a child restraint with the seat belts in a rear seat position, study the instructions that came with the child restraint to make sure it is compatible with this vehicle.

Child restraints and booster seats vary considerably in size, and some may fit in certain seating positions better than others.

Depending on where you place the child restraint and the size of the child restraint, you may not be able to access adjacent seat belts or LATCH anchors for additional passengers or child restraints. Adjacent seating positions should not be used if the child restraint prevents access to or interferes with the routing of the seat belt.

Wherever a child restraint is installed, be sure to follow the instructions that came with the child restraint system and secure the child restraint system properly.

Keep in mind that an unsecured child restraint can move around in a collision or sudden stop and injure people in the vehicle. Be sure to properly secure any child restraint in the vehicle — even when no child is in it.

Lower Anchors and Tethers for Children (LATCH System)

The LATCH system secures a child restraint during driving or in a crash. LATCH attachments on the child restraint are used to attach the child restraint to the anchors in the

vehicle. The LATCH system is designed to make installation of a child restraint easier.

In order to use the LATCH system in your vehicle, you need a child restraint that has LATCH attachments. LATCH-compatible rear-facing and forward-facing child seats can be properly installed using either the LATCH anchors or the vehicle's seat belts. Do not use both the seat belts and the LATCH anchorage system to secure a rear-facing or forward-facing child seat.

Booster seats use the vehicle's seat belts to secure the child and the booster seat. If the manufacturer recommends that the booster seat be secured with the LATCH system, this can be done as long as the booster seat can be positioned properly and there is no interference with the proper positioning of the lap-shoulder belt on the child.

Make sure to follow the instructions that came with the child restraint, and also the instructions in this manual.

When installing a child restraint with a top tether, you must also use either the lower anchors or the seat belts to properly secure the child restraint. A child restraint must never be installed using only the top tether and anchor.

The LATCH anchorage system can be used until the combined weight of the child plus the child restraint is 29.5 kg (65 lbs). Use the seat belt alone instead of the LATCH anchorage system once the combined weight is more than 29.5 kg (65 lbs).

See *Securing Child Restraints (With the Seat Belt in the Rear Seat)* ⇨ *92* or *Securing Child Restraints (With the Seat Belt in the Front Seat)* ⇨ *94*.

Child restraints built after March 2014 will be labeled with the specific child weight up to which the LATCH system can be used to install the restraint.

The following explains how to attach a child restraint with these attachments in the vehicle.

Not all vehicle seating positions have lower anchors. In this case, the seat belt must be used (with top tether where available) to secure the child restraint.
See *Securing Child Restraints (With the Seat Belt in the Rear Seat)* ⇨ *92* or *Securing Child Restraints (With the Seat Belt in the Front Seat)* ⇨ *94*.

Lower Anchors

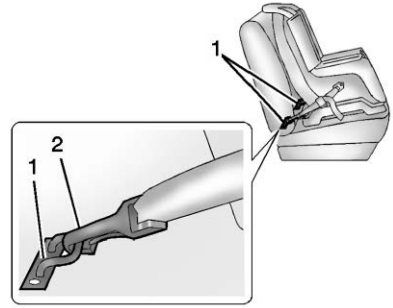

Lower anchors (1) are metal bars built into the vehicle. There are two lower anchors for each LATCH

seating position that will accommodate a child restraint with lower attachments (2).

Top Tether Anchor

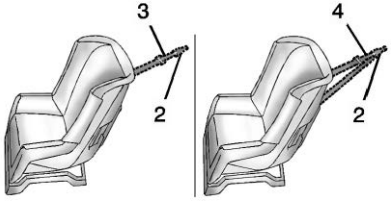

A top tether (3,4) is used to secure the top of the child restraint to the vehicle. A top tether anchor is built into the vehicle. The top tether attachment hook (2) on the child restraint connects to the top tether anchor in the vehicle in order to reduce the forward movement and rotation of the child restraint during driving or in a crash.

The child restraint may have a single tether (3) or a dual tether (4). Either will have a single attachment hook (2) to secure the top tether to the anchor.

Some child restraints that have a top tether are designed for use with or without the top tether being attached. Others require the top tether always to be attached. In Canada, the law requires that forward-facing child restraints have a top tether, and that the tether be attached. Be sure to read and follow the instructions for your child restraint.

Lower Anchor and Top Tether Anchor Locations

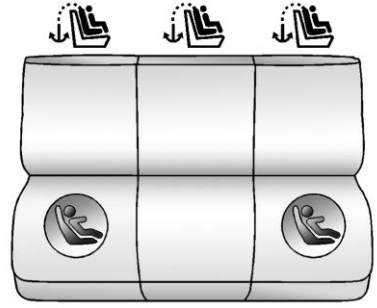

: Seating positions with top tether anchors.

: Seating positions with two lower anchors.

To assist in locating the lower anchors, each seating position with lower anchors has two labels, near the crease between the seatback and the seat cushion.

To assist in locating the top tether anchors, the top tether anchor symbol is on the trim near the anchor.

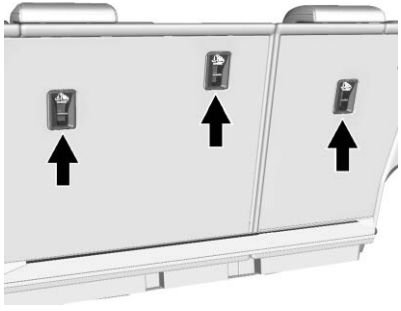

The top tether anchors are on the back of the rear seatbacks. Be sure to use an anchor on the same side of the vehicle as the seating position where the child restraint will be placed.

Do not secure a child restraint in a position without a top tether anchor if a national or local law requires that the top tether be attached, or if the instructions that come with the child restraint say that the top tether must be attached.

According to accident statistics, children and infants are safer when properly restrained in a child restraint system or infant restraint system secured in a rear seating position. See *Where to Put the Restraint* ⇨ *83* for additional information.

Securing a Child Restraint Designed for the LATCH System

⚠ Warning

If a LATCH-type child restraint is not attached to anchors, the child restraint will not be able to protect the child correctly. In a crash, the child could be seriously injured or killed. Install a LATCH-type child restraint properly using the anchors, or use the vehicle's seat belts to secure the restraint, following the instructions that came with the child restraint and the instructions in this manual.

⚠ Warning

To reduce the risk of serious or fatal injuries during a crash, do not attach more than one child restraint to a single anchor. Attaching more than one child

(Continued)

Warning (Continued)

restraint to a single anchor could cause the anchor or attachment to come loose or even break during a crash. A child or others could be injured.

⚠ Warning

Children can be seriously injured or strangled if a shoulder belt is wrapped around their neck. The shoulder belt can tighten but cannot be loosened if it is locked. The shoulder belt locks when it is pulled all the way out of the retractor. It unlocks when the shoulder belt is allowed to go all the way back into the retractor, but it cannot do this if it is wrapped around a child's neck. If the shoulder belt is locked and

(Continued)

Warning (Continued)

tightened around a child's neck, the only way to loosen the belt is to cut it.

Buckle any unused seat belts behind the child restraint so children cannot reach them. Pull the shoulder belt all the way out of the retractor to set the lock, and tighten the belt behind the child restraint after the child restraint has been installed.

Caution

Do not let the LATCH attachments rub against the vehicle's seat belts. This may damage these parts. If necessary, move buckled seat belts to avoid rubbing the LATCH attachments.

(Continued)

Caution (Continued)

Do not fold the rear seatback when the seat is occupied. Do not fold the empty rear seat with a seat belt buckled. This could damage the seat belt or the seat. Unbuckle and return the seat belt to its stowed position, before folding the seat.

If you need to secure more than one child restraint in the rear seat, see *Where to Put the Restraint* ⇨ *83*.

This system is designed to make installation of child restraints easier. When using lower anchors, do not use the vehicle's seat belts. Instead use the vehicle's anchors and child restraint attachments to secure the restraints. Some restraints also use another vehicle anchor to secure a top tether.

1. Attach and tighten the lower attachments to the lower anchors. If the child restraint does not have lower attachments or the desired

seating position does not have lower anchors, secure the child restraint with the top tether and the seat belts. Refer to the child restraint manufacturer instructions and the instructions in this manual.

1.1. Find the lower anchors for the desired seating position.

1.2. Put the child restraint on the seat.

For rear outboard seating positions, if the head restraint interferes with the proper installation of the child restraint, the head restraint may be removed. See “Head Restraint Removal and Reinstallation” at the end of this section.

When installing a rear-facing child restraint, it may be necessary to move the front seat forward to properly install the child restraint per the child restraint manufacturer instructions. See *Seat Adjustment* ⇨ *49*.

1.3. Attach and tighten the lower attachments on the child restraint to the lower anchors.

2. If the child restraint manufacturer recommends that the top tether be attached, attach and tighten the top tether to the top tether anchor, if equipped. Refer to the child restraint instructions and the following steps:

2.1. Find the top tether anchor.

2.2. Remove the cargo cover before installing the top tether. Place the cargo cover on the floor of the cargo area. The cargo cover should remain off while the top tether is in use.

2.3. Route, attach, and tighten the top tether according to your child restraint instructions and the following instructions:

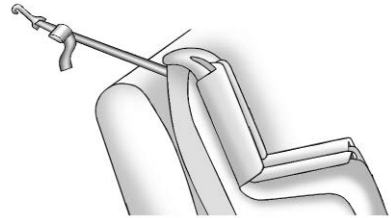

If the position you are using does not have a headrest or head restraint and you are using a single tether, route the tether over the seatback.

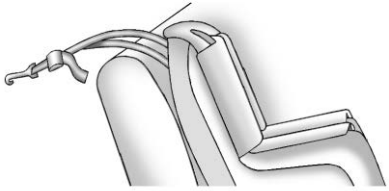

If the position you are using does not have a headrest or head restraint and you are using a dual tether, route the tether over the seatback.

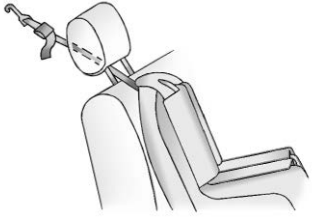

If the position you are using has an adjustable headrest or head restraint and you are using a single tether, raise the headrest or head restraint and route the tether under the headrest or head restraint and in between the headrest or head restraint posts.

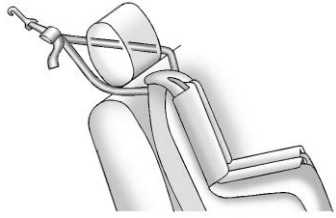

If the position you are using has an adjustable headrest or head restraint and your are using a dual tether, raise the headrest or head restraint and route the tether under the headrest or head restraint and around the headrest or head restraint posts.

3. Before placing a child in the child restraint, make sure it is securely held in place. To check, grasp the child restraint at the LATCH path and attempt to move it side to side and back and forth. There should be no more than 2.5 cm (1 in) of movement for proper installation.

Head Restraint Removal and Reinstallation

The rear outboard head restraints can be removed if they interfere with the proper installation of the child restraint.

To remove the head restraint:

1. Partially fold the seatback forward. See *Rear Seats* ⇨ *56* for additional information.

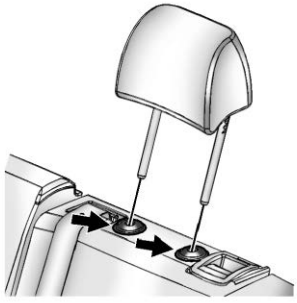

2. Press both buttons on the head restraint posts at the same time, and pull up on the head restraint.
3. Store the head restraint in a secure place.
4. When the child restraint is removed, reinstall the head restraint before the seating position is used.

⚠ Warning

With head restraints that are not installed and adjusted properly, there is a greater chance that occupants will suffer a neck/spinal injury in a crash. Do not drive until the head restraints for all occupants are installed and adjusted properly.

To reinstall the head restraint:

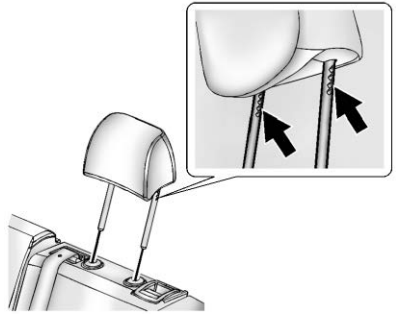

1. Insert the head restraint posts into the holes in the top of the seatback. The notches on the posts must face the driver side of the vehicle.
2. Push the head restraint down.

   If necessary, press the height adjustment release button to further lower the head restraint. See Rear Seats.
3. Try to move the head restraint to make sure that it is locked in place.

Replacing LATCH System Parts After a Crash

⚠ Warning

A crash can damage the LATCH system in the vehicle. A damaged LATCH system may not properly secure the child restraint, resulting in serious injury or even death in a crash. To help make sure the LATCH system is

(Continued)

Warning (Continued)

working properly after a crash, see your dealer to have the system inspected and any necessary replacements made as soon as possible.

If the vehicle has the LATCH system and it was being used during a crash, new LATCH system parts may be needed.

New parts and repairs may be necessary even if the LATCH system was not being used at the time of the crash.

Securing Child Restraints (With the Seat Belt in the Rear Seat)

When securing a child restraint with the seat belts in a rear seat position, study the instructions that came with the child restraint to make sure it is compatible with this vehicle.

If the child restraint has the LATCH system, see *Lower Anchors and Tethers for Children (LATCH System)* ⇨ *84* for how and where to install the child restraint using LATCH. If a child restraint is secured in the vehicle using a seat belt and it uses a top tether, see *Lower Anchors and Tethers for Children (LATCH System)* ⇨ *84* for top tether anchor locations.

Do not secure a child seat in a position without a top tether anchor if a national or local law requires that the top tether be anchored, or if the instructions that come with the child restraint say that the top strap must be anchored.

If the child restraint or vehicle seat position does not have the LATCH system, you will be using the seat belt to secure the child restraint. Be sure to follow the instructions that came with the child restraint.

If more than one child restraint needs to be installed in the rear seat, be sure to read *Where to Put the Restraint* ⇨ *83*.

1. Put the child restraint on the seat.

   For outboard second row seating positions, remove the seat belt from the guide. Do not secure the child restraint with the seat belt routed through the guide.

   When installing a rear-facing child restraint, it may be necessary to move the front seat forward to properly install the child restraint per the child restraint manufacturer instructions.

   If the head restraint interferes with the proper installation of the child restraint, the head restraint may be removed. See "Head Restraint Removal and Reinstallation" under *Lower Anchors and Tethers for Children (LATCH System)* ⇨ *84*.

2. Pick up the latch plate, and run the lap and shoulder portions of the vehicle's seat belt

through or around the restraint. The child restraint instructions will show you how.

3. Push the latch plate into the buckle until it clicks.

   Position the release button on the buckle, away from the child restraint system, so that the seat belt could be quickly unbuckled if necessary.

4. Pull the shoulder belt all the way out of the retractor to set the lock. When the retractor lock is set, the belt can be tightened but not pulled out of the retractor.

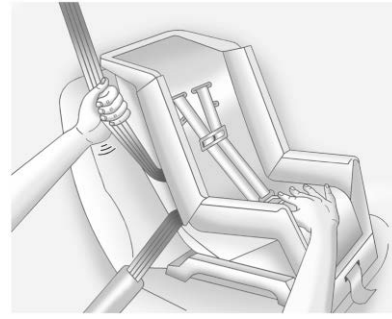

5. To tighten the belt, push down on the child restraint, pull the shoulder portion of the belt to tighten the lap portion of the belt, and feed the shoulder belt back into the retractor. When installing a forward-facing child restraint, it may be helpful to use your knee to push down on the child restraint as you tighten the belt.

   Try to pull the belt out of the retractor to make sure the retractor is locked. If the retractor is not locked, repeat Steps 4 and 5.

6. If the child restraint has a top tether, follow the child restraint manufacturer's instructions regarding the use of the top tether. See *Lower Anchors and Tethers for Children (LATCH System)* ⇨ *84*.
7. Before placing a child in the child restraint, make sure it is securely held in place. To check, grasp the child restraint at the seat belt path and attempt to move it side to side and back and forth. When the child restraint is properly installed, there should be no more than 2.5 cm (1 in) of movement.

To remove the child restraint, unbuckle the vehicle seat belt and let it return to the stowed position. If the top tether is attached to a top tether anchor, disconnect it.

If the head restraint was removed, reinstall it before the seating position is used. See "Head Restraint Removal and Reinstallation" under *Lower Anchors and Tethers for Children (LATCH System)* ⇨ *84* for additional information on installing the head restraint properly.

Securing Child Restraints (With the Seat Belt in the Front Seat)

This vehicle has airbags. A rear seat is a safer place to secure a forward-facing child restraint. See *Where to Put the Restraint* ⇨ *83*.

In addition, the vehicle has a passenger sensing system which is designed to turn off the front outboard passenger frontal airbag and knee airbag (if equipped) under certain conditions.
See *Passenger Sensing System* ⇨ *72* and *Passenger Airbag Status Indicator* ⇨ *115* for more information, including important safety information.

Never put a rear-facing child seat in the front. This is because the risk to the rear-facing child is so great if the airbag deploys.

⚠ Warning

A child in a rear-facing child restraint can be seriously injured or killed if the front outboard passenger frontal airbag inflates. This is because the back of the rear-facing child restraint would be very close to the inflating airbag. A child in a forward-facing child restraint can be seriously injured or killed if the front outboard passenger frontal airbag inflates and the passenger seat is in a forward position.

Even if the passenger sensing system has turned off the front outboard passenger airbag(s), no system is fail-safe. No one can guarantee that an airbag will not deploy under some unusual circumstance, even though the airbag(s) are off.

Secure rear-facing child restraints in a rear seat, even if the airbag(s) are off. If you secure a

(Continued)

Warning (Continued)

forward-facing child restraint in the front outboard passenger seat, always move the seat as far back as it will go. It is better to secure the child restraint in a rear seat.

See *Passenger Sensing System* ⇨ *72* for additional information.

If the child restraint uses a top tether, see *Lower Anchors and Tethers for Children (LATCH System)* ⇨ *84* for top tether anchor locations.

Do not secure a child seat in a position without a top tether anchor if a national or local law requires that the top tether be anchored, or if the instructions that come with the child restraint say that the top strap must be anchored.

In Canada, the law requires that forward-facing child restraints have a top tether, and that the tether be attached.

When using the lap-shoulder belt to secure the child restraint in this position, follow the instructions that came with the child restraint and the following instructions:

1. Move the seat as far back as it will go before securing the forward-facing child restraint. Move the seat upward or the seatback to an upright position, if needed, to get a tight installation of the child restraint.

   When the passenger sensing system has turned off the front outboard passenger frontal airbag and knee airbag (if equipped), the off indicator on the passenger airbag status indicator should light and stay lit when you start the vehicle. See *Passenger Airbag Status Indicator* ⇨ *115*.

2. Put the child restraint on the seat.

3. Pick up the latch plate, and run the lap and shoulder portions of the vehicle's seat belt through or around the restraint. The child restraint instructions will show you how.

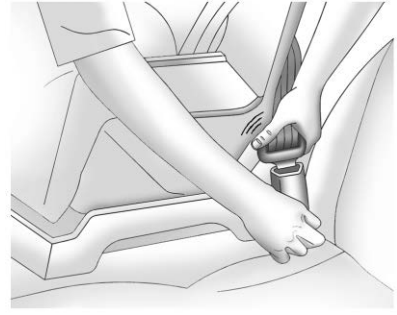

4. Push the latch plate into the buckle until it clicks.

   Position the release button on the buckle, away from the child restraint system, so that the seat belt could be quickly unbuckled if necessary.

5. Pull the shoulder belt all the way out of the retractor to set the lock. When the retractor lock is set, the belt can be tightened but not pulled out of the retractor.

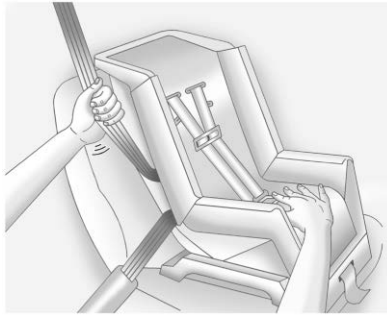

6. To tighten the belt, push down on the child restraint, pull the shoulder portion of the belt to tighten the lap portion of the belt, and feed the shoulder belt back into the retractor. When installing a forward-facing child restraint, it may be helpful to use your knee to push down on the child restraint as you tighten the belt.

   Try to pull the belt out of the retractor to make sure the retractor is locked. If the retractor is not locked, repeat Steps 5 and 6.

7. Before placing a child in the child restraint, make sure it is securely held in place. To check, grasp the child restraint at the seat belt path and attempt to move it side to side and back and forth. When the child restraint is properly installed, there should be no more than 2.5 cm (1 in) of movement.

If the airbags are off, the off indicator in the passenger airbag status indicator will come on and stay on when the vehicle is started.

If a child restraint has been installed and the on indicator is lit, see “If the On Indicator Is Lit for a Child Restraint” under *Passenger Sensing System* ⇨ *72*.

To remove the child restraint, unbuckle the vehicle seat belt and let it return to the stowed position.

Storage

Storage Compartments
Storage Compartments 97
Instrument Panel Storage 97
Glove Box 97
Cupholders 98
Underseat Storage 98
Center Console Storage 98

Additional Storage Features
Cargo Cover 99
Cargo Management System . . . 99
Convenience Net 100
First Aid Kit 100

Roof Rack System
Roof Rack System 100

Storage Compartments

⚠ Warning

Do not store heavy or sharp objects in storage compartments. In a crash, these objects may cause the cover to open and could result in injury.

Instrument Panel Storage

Pull the handle to open.

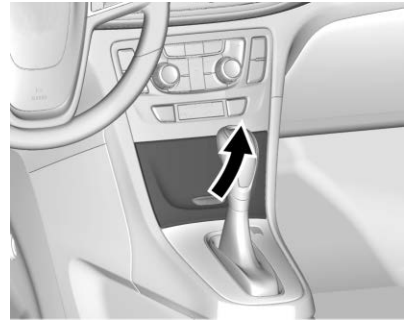

Pull up on the handle to open.

Glove Box

Lift up on the glove box lever to open it.

Cupholders

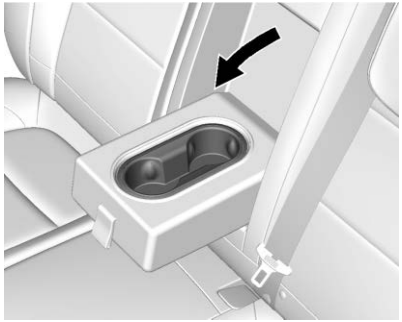

If equipped, pull the rear seat armrest down to access.

Underseat Storage

If equipped, there is storage under the front passenger seat. Lift the end of the tray and pull it forward to open. Push it in toward the seat to close.

Center Console Storage

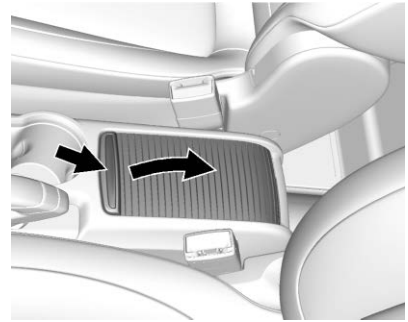

For vehicles with center console storage, press the button and slide rearward to open.

Additional Storage Features

Cargo Cover

⚠ Warning

An unsecured cargo cover could strike people in a sudden stop or turn, or in a crash. Store the cargo cover securely or remove it from the vehicle.

⚠ Warning

Do not place objects on the cargo cover. Sudden stops or turns can cause objects to be thrown in the vehicle. You or others could be injured.

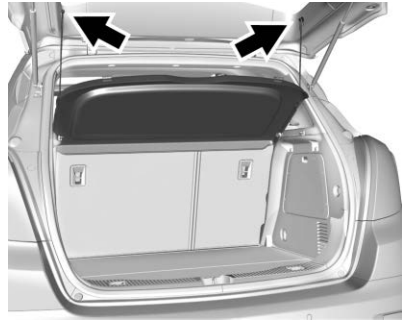

If equipped, use the cargo cover to cover items in the rear of the vehicle.

To install, hang the loops on the liftgate anchors.

Cargo Management System

This vehicle has a cargo management system in the rear.

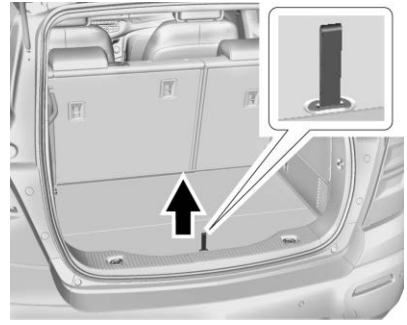

Pull the strap to lift.

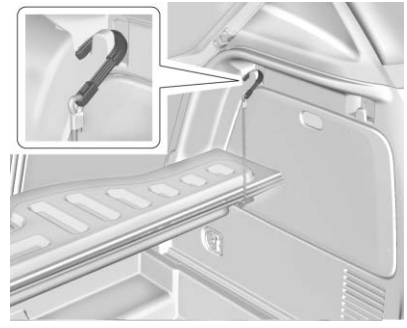

Fold the load floor. Place the hook from the load floor inside the hook on the side trim.

Convenience Net

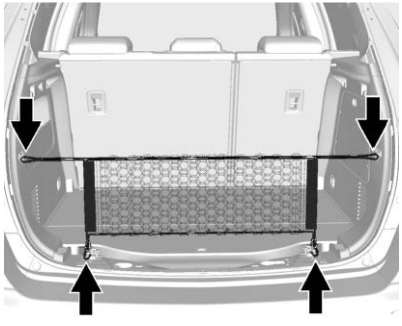

The vehicle may have a convenience net.

The net is used to store small loads and should not be used for heavy loads.

First Aid Kit

If equipped, the first aid kit is stowed in the side rear storage compartment.

Roof Rack System

⚠ Warning

If something is carried on top of the vehicle that is longer or wider than the roof rack — like paneling, plywood, or a mattress — the wind can catch it while the vehicle is being driven. The item being carried could be violently torn off, and this could cause a collision and damage the vehicle. Never carry something longer or wider than the roof rack on top of the vehicle unless using a GM certified accessory carrier.

For vehicles with a roof rack, the rack can be used to load items. For roof racks that do not have crossrails included, GM Certified crossrails can be purchased as an accessory. See your dealer for additional information.

Caution

Loading cargo on the roof rack that weighs more than 75 kg (165 lb) or hangs over the rear or sides of the vehicle may damage the vehicle. Load cargo so that it rests evenly between the crossrails, making sure to fasten cargo securely.

To prevent damage or loss of cargo when driving, check to make sure crossrails and cargo are securely fastened. Loading cargo on the roof rack will make the vehicle's center of gravity higher. Avoid high speeds, sudden starts, sharp turns, sudden braking, or abrupt maneuvers; otherwise it may result in loss of control. If driving for a long distance, on rough roads, or at high speeds, occasionally stop the vehicle to make sure the cargo remains in its place. Do not exceed the maximum vehicle capacity when loading the vehicle.

See *Vehicle Load Limits* ⇨ *162*.

Instruments and Controls

Controls

Steering Wheel Adjustment ... 103
Steering Wheel Controls 103
Heated Steering Wheel 103
Horn 103
Windshield Wiper/Washer 103
Rear Window Wiper/ Washer 105
Compass 106
Clock 107
Power Outlets 107

Warning Lights, Gauges, and Indicators

Warning Lights, Gauges, and Indicators 108
Instrument Cluster 109
Speedometer 111
Odometer 112
Trip Odometer 112
Tachometer 112
Fuel Gauge 112
Engine Coolant Temperature Gauge 113
Seat Belt Reminders 114
Airbag Readiness Light 115
Passenger Airbag Status Indicator 115
Charging System Light 116
Malfunction Indicator Lamp (Check Engine Light) 116
Brake System Warning Light 118
Antilock Brake System (ABS) Warning Light 119
Lane Departure Warning (LDW) Light 119
Vehicle Ahead Indicator 120
Traction Off Light 120
StabiliTrak OFF Light 120
Traction Control System (TCS)/ StabiliTrak Light 120
Tire Pressure Light 121
Engine Oil Pressure Light 121
Low Fuel Warning Light 122
Immobilizer Light 122
High-Beam On Light 122
Front Fog Lamp Light 122
Lamps On Reminder 123
Cruise Control Light 123

Information Displays

Driver Information Center (DIC) (Base Level) 123
Driver Information Center (DIC) (Uplevel) 125

Vehicle Messages

Vehicle Messages 127
Engine Power Messages 128
Vehicle Speed Messages 128

Vehicle Personalization

Vehicle Personalization 128

Universal Remote System

Universal Remote System 134
Universal Remote System Programming 134
Universal Remote System Operation 137

Controls

Steering Wheel Adjustment

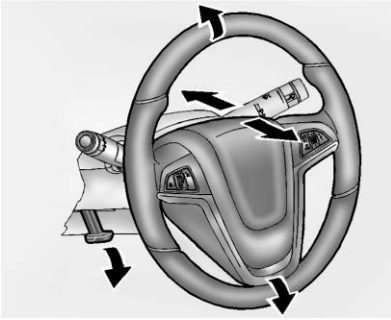

To adjust the steering wheel:

1. Pull the lever down.
2. Move the steering wheel up or down.
3. Pull or push the steering wheel closer or away from you.
4. Lift the lever up to lock the steering wheel in place.

Do not adjust the steering wheel while driving.

Steering Wheel Controls

The infotainment system can be operated by using the steering wheel controls. See "Steering Wheel Controls" in the infotainment manual.

Heated Steering Wheel

: If equipped, press to turn on or off. A light on the button displays when the feature is turned on.

The steering wheel takes about three minutes to start heating.

Horn

Press on the steering wheel pad to sound the horn.

Windshield Wiper/Washer

The windshield wiper/washer lever is on the right side of the steering column.

Move the lever to one of the following positions:

HI : Use for fast wipes.

LO : Use for slow wipes.

INT : Use this setting for intermittent wipes or Rainsense™, if equipped. For intermittent wipes, move the windshield wiper lever to INT. Turn the INT band up for more frequent wipes or down for less frequent wipes.

If equipped with Rainsense wipes, see “Rainsense” later in this section.

OFF : Use to turn the wipers off.

1X : For a single wipe, briefly move the wiper lever down. For several wipes, hold the wiper lever down.

FRONT : Pull the windshield wiper lever toward you to spray windshield washer fluid and activate the wipers. The wipers will continue until the lever is released or the maximum wash time is reached. When the windshield wiper lever is released, additional wipes may occur depending on how long the windshield washer had been activated. See *Washer Fluid* ⇨ *216* for information on filling the windshield washer fluid reservoir.

Wipe Parking

If the ignition is turned off while the wipers are on LO, HI, or INT, they will immediately stop.

If the windshield wiper lever is then moved to OFF before the driver door is opened or within 10 minutes, the wipers will restart and move to the base of the windshield.

If the ignition is turned off while the wipers are performing wipes due to windshield washing or Rainsense wipes, the wipers continue to run until they reach the base of the windshield.

⚠ Warning

In freezing weather, do not use the washer until the windshield is warmed. Otherwise the washer fluid can form ice on the windshield, blocking your vision.

Clear snow and ice from the wiper blades before using them. If frozen to the windshield, carefully loosen or thaw them. Damaged wiper blades should be replaced. See *Wiper Blade Replacement* ⇨ *221*.

Heavy snow or ice can overload the wiper motor. A circuit breaker will stop the motor until it cools down.

Rainsense™

If equipped with Rainsense, a sensor near the top center of the windshield detects the amount of water on the windshield and controls the frequency of the windshield wiper.

Keep the sensor free from debris to allow for best system performance.

INT : When enabled, move the windshield wiper lever to INT. Turn the INT band on the wiper lever to adjust the sensitivity.

- Turn the band up for more sensitivity to moisture.
- Turn the band down for less sensitivity to moisture.
- Move the windshield wiper lever out of the INT position to deactivate Rainsense.

Wiper Arm Assembly Protection

When using an automatic car wash, move the windshield wiper lever to OFF. This disables the automatic Rainsense windshield wipers and/or manual windshield wipers.

With Rainsense, if the transmission is in N (Neutral) and the vehicle speed is very slow, the wipers will automatically stop at the base of the windshield.

The wiper operations return to normal when the transmission is no longer in N (Neutral) or the vehicle speed has increased.

Rear Window Wiper/ Washer

The rear wiper/washer controls are on the end of the windshield wiper lever.

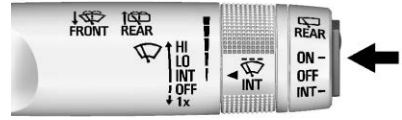

ON : Press the upper portion of the button for continuous rear window wipes.

OFF : The rear wiper turns off when the button is returned to the middle position.

INT : Press the lower portion of the button for rear intermittent wipes.

: Push the windshield wiper lever forward to spray washer fluid on the rear window. The lever returns to its starting position when released.

Rear Wiper Arm Assembly Protection

When using an automatic car wash, move the rear wiper control to OFF to disable the rear wiper. In some vehicles, if the transmission is in N (Neutral) and the vehicle speed is very slow, the rear wiper will automatically park under the rear spoiler.

The wiper operations return to normal when the transmission is no longer in N (Neutral) or the vehicle speed has increased.

Reverse Gear Wipes

If the rear wiper control is off, the rear wiper will automatically operate continuously when the shift lever is in R (Reverse), and the front windshield wiper is performing low or high speed wipes. If the rear wiper control is off, the shift lever is in R (Reverse), and the front windshield wiper is performing interval wipes, then the rear wiper automatically performs interval wipes.

This feature can be changed. See *Vehicle Personalization* ⇨ *128*.

The windshield washer reservoir is used for the windshield and the rear window. Check the fluid level in the reservoir if either washer is not working. See *Washer Fluid* ⇨ *216*.

Compass

The vehicle may have a compass display in the Driver Information Center (DIC).

Setting the Compass Zone

Under certain circumstances, such as during a long trip or moving to a new area, the compass zone will need to be reset. If the compass is not set to the correct zone, it may give false readings. The compass zone should be set to the area in which the vehicle is currently traveling.

Use the DIC buttons to set the compass zone:

1. While the vehicle is in P (Park), press the MENU button to display the DIC menu.
2. Press and hold SET/CLR while the Set Area display is active.

3. Find the vehicle's current location and zone number on the map. Zones 1 through 15 are available.
4. Use △ ▽ to change to the correct zone number.
5. Press SET/CLR to confirm the setting.

Clock

Setting the Time and Date

To set the time or date:

1. Select Settings from the Home Page, then select Time and Date.
2. Select the desired function.

To set the time or date, touch ∧ or ∨ to change the hour, minutes, AM, PM, day, month, or year.

To change the 12-24 Hr setting, touch 12-24 Hr.

To turn Auto Set on and off, touch Auto Set.

If auto timing is set, the time displayed on the clock may not update immediately when driving into a new time zone.

Press ◀ BACK to go to the last menu and save the changes or ⌂ to return to the Home Page.

Power Outlets

Power Outlet 110/120 Volt Alternating Current

If equipped, this power outlet is on the rear of the center console. It can be used to plug in electrical equipment that uses a maximum limit of 150 watts.

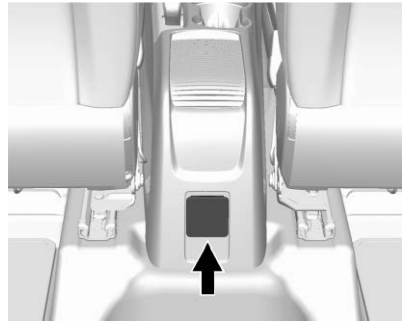

An indicator light on the outlet turns on to show it is in use. The light comes on when the ignition is on and equipment requiring less than 150 watts is plugged into the outlet, and no system fault is detected.

The indicator light does not come on when the ignition is off or if the equipment is not fully seated into the outlet.

If equipment is connected using more than 150 watts or a system fault is detected, a protection circuit shuts off the power supply and the indicator light turns off. To reset the circuit, unplug the item and plug it back in or turn the Retained Accessory Power (RAP) off and then back on. See *Retained Accessory Power (RAP)* ⇨ *171*. The power restarts when equipment using 150 watts or less is plugged into the outlet and a system fault is not detected.

The power outlet is not designed for and may not work properly, if the following are plugged in:

- Equipment with high initial peak wattage such as: compressor-driven refrigerators and electric power tools.

- Other equipment requiring an extremely stable power supply such as: microcomputer-controlled electric blankets, touch sensor lamps, etc.
- Medical equipment.

Warning Lights, Gauges, and Indicators

Warning lights and gauges can signal that something is wrong before it becomes serious enough to cause an expensive repair or replacement. Paying attention to the warning lights and gauges could prevent injury.

Some warning lights come on briefly when the engine is started to indicate they are working. When one of the warning lights comes on and stays on while driving, or when one of the gauges shows there may be a problem, check the section that explains what to do. Waiting to do repairs can be costly and even dangerous.

Instrument Cluster

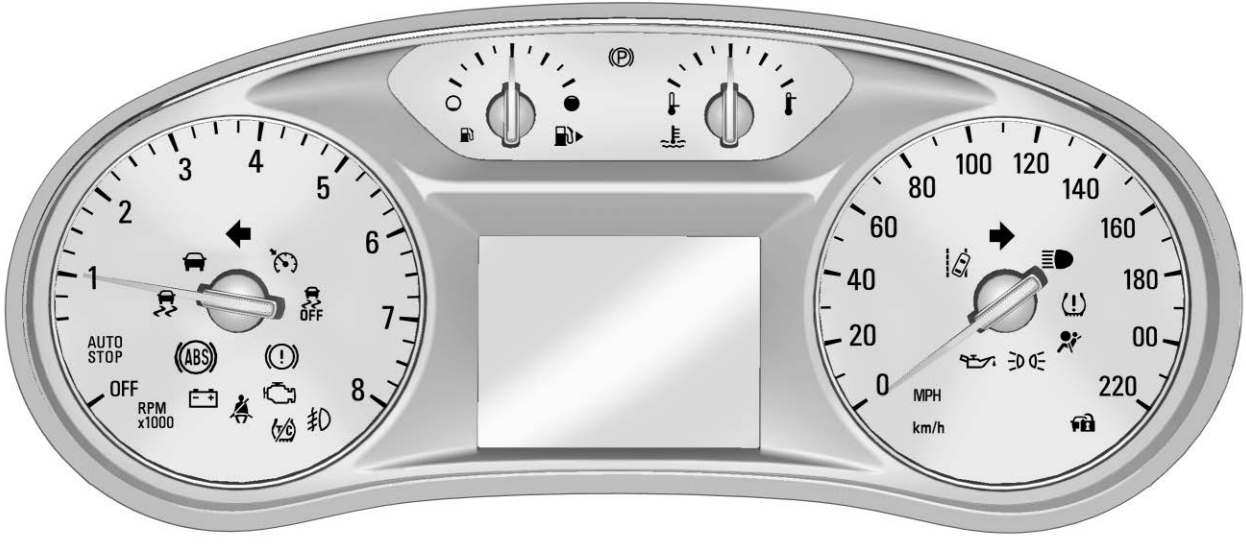

Base Level Metric

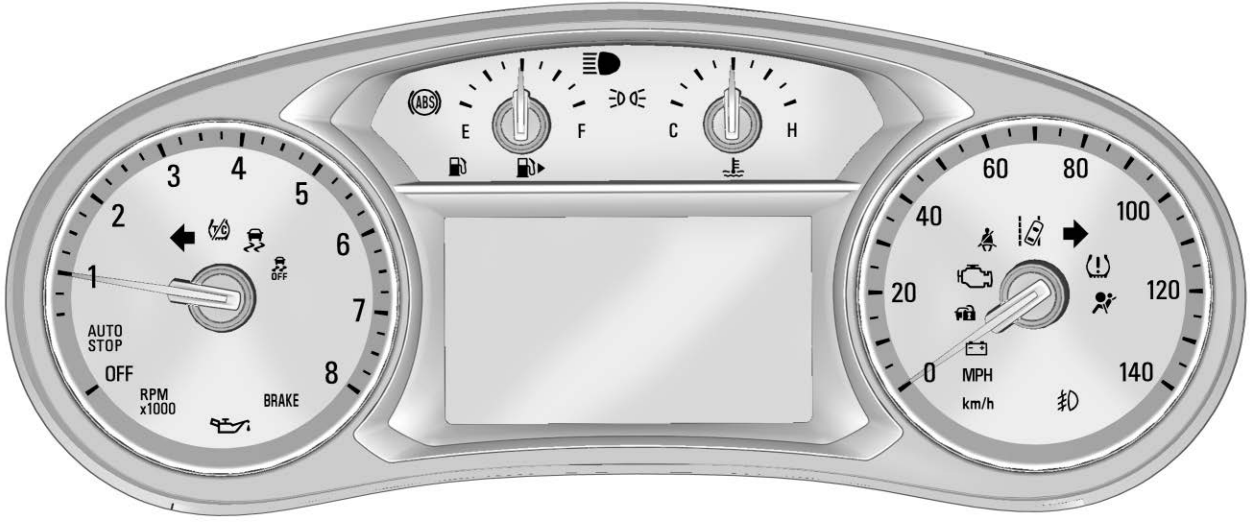

Uplevel English Shown, Metric Similar

Cluster Menu

There is an interactive display area in the center of the instrument cluster.

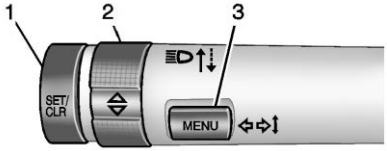

Use the controls to open and scroll through the different items and displays.

1. **SET/CLR :** Press to set or clear the menu item when it is displayed.
2. **:** Turn the band to scroll through the menu items.
3. **MENU:** Press to access the cluster applications. This button is also used to return to or exit the last screen displayed on the DIC.

Press MENU to access the cluster applications. Use to scroll through the list of available applications. Not all applications will be available on all vehicles.

- Info app. This is where you can view the selected Driver Information Center (DIC) displays.
  See *Driver Information Center (DIC) (Uplevel)* ⇨ *125* or *Driver Information Center (DIC) (Base Level)* ⇨ *123*.
- Navigation
- Options

Navigation

Press SET/CLR to select the Navigation app. Use to highlight available options. If there is no active route, you can resume the last route and turn the voice prompts on/off. If there is an active route, press SET/CLR to cancel route guidance or turn the voice prompts on/off.

Options

Press SET/CLR to select the Options app. Use to scroll through the items in the Options menu.

Unit : Press SET/CLR while Unit is displayed to enter the Units menu. Choose U.S. or metric units by pressing SET/CLR while the desired item is highlighted.

Info Pages : Press SET/CLR while Info Pages is displayed to enter the Info Pages menu. Press SET/CLR to edit the list of info apps displayed.
See *Driver Information Center (DIC) (Uplevel)* ⇨ *125* or *Driver Information Center (DIC) (Base Level)* ⇨ *123*.

Speedometer

The speedometer shows the vehicle speed in kilometers per hour (km/h) and miles per hour (mph).

Odometer

The odometer shows how far the vehicle has been driven, in either kilometers or miles.

Trip Odometer

The trip odometer shows how far the vehicle has been driven since the trip odometer was last reset.

The trip odometer is accessed and reset through the Driver Information Center (DIC).
See *Driver Information Center (DIC) (Uplevel)* ⇨ *125* or *Driver Information Center (DIC) (Base Level)* ⇨ *123*.

Tachometer

The tachometer displays the engine speed in revolutions per minute (rpm).

For vehicles with the Stop/Start system, when the ignition is on, the tachometer indicates the vehicle status. When pointing to AUTO STOP, the engine is off but the vehicle is on and can move. The engine could auto start at any time. When the indicator points to OFF, the vehicle is off.

When the engine is on, the tachometer will indicate the engine's revolutions per minute (rpm). The tachometer may vary by several hundred rpm's, during Auto Stop mode, when the engine is shutting off and restarting.

A slight bump may be felt when the transmission is determining the most fuel efficient operating range.

Caution
If the engine is operated with the rpm's in the warning area at the high end of the tachometer, the vehicle could be damaged, and the damage would not be covered by the vehicle warranty. Do not operate the engine with the rpm's in the warning area.

Fuel Gauge

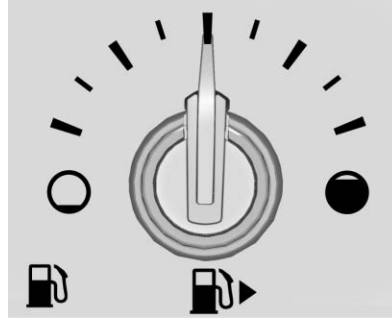

Metric Uplevel Shown

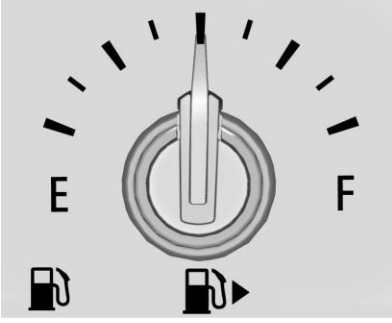

English Uplevel Shown

When the ignition is on, the fuel gauge indicates about how much fuel is left in the tank.

An arrow on the fuel gauge indicates the side of the vehicle the fuel door is on.

When the indicator nears empty, the low fuel light comes on. There is a small amount of fuel left, but the fuel tank should be filled soon.

Here are four things that some owners ask about. None of these show a problem with the fuel gauge:

- At the service station, the fuel pump shuts off before the gauge reads full.
- It takes a little more or less fuel to fill up than the gauge indicated. For example, the gauge indicated the tank was half full, but it actually took a little more or less than half the tank's capacity to fill the tank.
- The gauge moves a little while turning a corner or speeding up.
- The gauge takes a few seconds to stabilize after the ignition is turned on, and goes back to empty when the ignition is turned off.

Engine Coolant Temperature Gauge

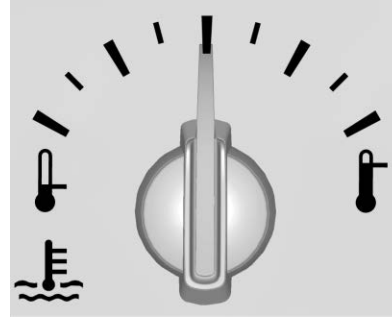

Metric Base Level Shown

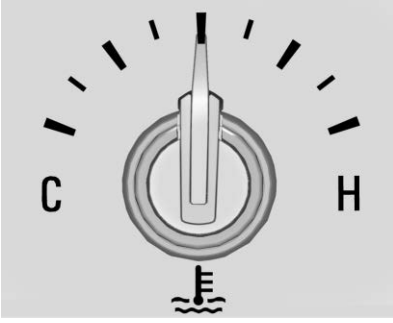

English Uplevel Shown

This gauge shows the engine coolant temperature.

If the pointer moves toward the warning area at the high end of the gauge, the engine is too hot.

This reading indicates the same thing as the warning light. It means that the engine coolant has overheated. If the vehicle has been operating under normal driving conditions, pull off the road, stop the vehicle, and turn off the engine as soon as possible. See *Engine Overheating* ⇨ *215*.

Seat Belt Reminders

Driver Seat Belt Reminder Light

There is a driver seat belt reminder light on the instrument cluster.

When the vehicle is started, this light flashes and a chime may come on to remind the driver to fasten their seat belt. Then the light stays on solid until the belt is buckled. This cycle may continue several times if the driver remains or becomes unbuckled while the vehicle is moving.

If the driver seat belt is buckled, neither the light nor the chime comes on.

Passenger Seat Belt Reminder Light

The vehicle may also have a passenger seat belt reminder light.

When the vehicle is started, this light flashes and a chime may come on to remind passengers to fasten their seat belt. Then the light stays on solid until the belt is buckled.

This cycle continues several times if the front passenger remains or becomes unbuckled while the vehicle is moving.

If the front passenger seat belt is buckled, neither the chime nor the light comes on.

The front passenger seat belt reminder light and chime may turn on if an object is put on the seat such as a briefcase, handbag, grocery bag, laptop, or other

electronic device. To turn off the reminder light and/or chime, remove the object from the seat or buckle the seat belt.

Airbag Readiness Light

This light shows if there is an electrical problem with the airbag system. The system check includes the airbag sensor(s), passenger sensing system (if equipped), the pretensioners, the airbag modules, the wiring, and the crash sensing and diagnostic module. For more information on the airbag system, see *Airbag System* ⇨ *66*.

The airbag readiness light comes on for several seconds when the vehicle is started. If the light does not come on then, have it fixed immediately.

⚠ Warning

If the airbag readiness light stays on after the vehicle is started or comes on while driving, it means the airbag system might not be working properly. The airbags in the vehicle might not inflate in a crash, or they could even inflate without a crash. To help avoid injury, have the vehicle serviced right away.

Passenger Airbag Status Indicator

The vehicle has a passenger sensing system. See *Passenger Sensing System* ⇨ *72* for important safety information. The instrument panel has a passenger airbag status indicator.

United States

Canada and Mexico

When the vehicle is started, the passenger airbag status indicator will light ON and OFF, or the symbol for on and off, for several seconds as a system check. Then, after several seconds, the status indicator will light either ON or OFF, or the on or off symbol to let you know the status of the front outboard passenger frontal airbag and knee airbag (if equipped).

If the word ON or the on symbol is lit on the passenger airbag status indicator, it means that the front

outboard passenger frontal airbag and knee airbag (if equipped) are allowed to inflate.

If the word OFF or the off symbol is lit on the passenger airbag status indicator, it means that the passenger sensing system has turned off the front outboard passenger frontal airbag and passenger knee airbag (if equipped).

If, after several seconds, both status indicator lights remain on, or if there are no lights at all, there may be a problem with the lights or the passenger sensing system. See your dealer for service.

⚠ Warning

If the airbag readiness light ever comes on and stays on, it means that something may be wrong with the airbag system. To help avoid injury to yourself or others, have the vehicle serviced right away. See *Airbag Readiness*

(Continued)

Warning (Continued)

Light ⇨ *115* for more information, including important safety information.

Charging System Light

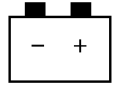

This light will come on briefly when the ignition is turned on, and the engine is not running, as a check to show it is working.

It should go out when the engine is started. If it stays on, or comes on while driving, there may be a problem with the electrical charging system. Have it checked by your dealer. Driving while this light is on could drain the battery. If a short distance must be driven with the light on, turn off all accessories, such as the radio and air conditioner, to help reduce the drain on the battery.

Malfunction Indicator Lamp (Check Engine Light)

This light is part of the vehicle's emission control on-board diagnostic system. If this light is on while the engine is running, a malfunction has been detected and the vehicle may require service. The light should come on to show that it is working when the ignition is in Service Mode. See *Ignition Positions* ⇨ *166*.

Malfunctions are often indicated by the system before any problem is noticeable. Being aware of the light and seeking service promptly when it comes on may prevent damage.

Caution

If the vehicle is driven continually with this light on, the emission control system may not work as well, the fuel economy may be lower, and the vehicle may not run smoothly. This could lead to costly repairs that might not be covered by the vehicle warranty.

Caution

Modifications to the engine, transmission, exhaust, intake, or fuel system, or the use of replacement tires that do not meet the original tire specifications, can cause this light to come on. This could lead to

(Continued)

Caution (Continued)

costly repairs not covered by the vehicle warranty. This could also affect the vehicle's ability to pass an Emissions Inspection/ Maintenance test. See *Accessories and Modifications* ⇨ *200*.

If the light is flashing : A malfunction has been detected that could damage the emission control system and increase vehicle emissions. Diagnosis and service may be required.

To help prevent damage, reduce vehicle speed and avoid hard accelerations and uphill grades.

If the light continues to flash, find a safe place to park. Turn the vehicle off and wait at least 10 seconds before restarting the engine. If the light is still flashing, follow the previous guidelines and see your dealer for service as soon as possible.

If the light is on steady : A malfunction has been detected. Diagnosis and service may be required.

Check the following:

- If fuel has been added to the vehicle using the capless funnel adapter, make sure that it has been removed. See "Filling the Tank with a Portable Gas Can" under *Filling the Tank* ⇨ *194*. The diagnostic system can detect if the adapter has been left installed in the vehicle, allowing fuel to evaporate into the atmosphere. A few driving trips with the adapter removed may turn off the light.
- Poor fuel quality can cause inefficient engine operation and poor driveability, which may go away once the engine is warmed up. If this occurs, change the fuel brand. It may require at least one full tank of the proper fuel to turn the light off. See *Fuel* ⇨ *193*.

If the light remains on, see your dealer.

Emissions Inspection and Maintenance Programs

If the vehicle requires an Emissions Inspection/Maintenance test, the test equipment will likely connect to the vehicle's Data Link Connector (DLC).

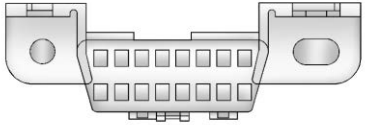

The DLC is under the instrument panel to the left of the steering wheel. Connecting devices that are not used to perform an Emissions Inspection/Maintenance test or to service the vehicle may affect vehicle operation. See *Add-On Electrical Equipment* ⇨ *197*. See your dealer if assistance is needed.

The vehicle may not pass inspection if:

- The light is on when the engine is running.
- The light does not come on when the ignition is in Service Mode.
- Critical emission control systems have not been completely diagnosed. If this happens, the vehicle would not be ready for inspection and might require several days of routine driving before the system is ready for inspection. This can happen if the 12-volt battery has recently been replaced or run down, or if the vehicle has been recently serviced.

See your dealer if the vehicle will not pass or cannot be made ready for the test.

Brake System Warning Light

The vehicle brake system consists of two hydraulic circuits. If one circuit is not working, the remaining circuit can still work to stop the vehicle. For normal braking performance, both circuits need to be working

BRAKE

Metric **English**

This light should come on briefly when the engine is started. If it does not come on then, have it fixed so it will be ready to warn you if there is a problem.

When the ignition is on, the brake system warning light comes on when the parking brake is set. The light stays on if the parking brake does not fully release. If it stays on after the parking brake is fully

released, there is a brake problem. Have the brake system inspected immediately.

⚠ Warning

The brake system might not be working properly if the brake system warning light is on. Driving with the brake system warning light on can lead to a crash. If the light is still on after the vehicle has been pulled off the road and carefully stopped, have the vehicle towed for service.

If the light comes on while driving, a chime sounds. Pull off the road and stop. The pedal might be harder to push or go closer to the floor. It might also take longer to stop. If the light is still on, have the vehicle towed for service. See *Towing the Vehicle* ⇨ *263*.

Antilock Brake System (ABS) Warning Light

This light comes on briefly when the engine is started.

If it does not, have the vehicle serviced by your dealer. If the system is working normally, the indicator light then goes off.

If the ABS light stays on, turn the ignition off. If the light comes on while driving, stop as soon as it is safely possible and turn the ignition off. Then start the engine again to reset the system. If the ABS light stays on, or comes on again while driving, the vehicle needs service. If the regular brake system warning light is not on, the vehicle still has brakes, but not antilock brakes. If the regular brake system warning light is also on, the vehicle does not have antilock brakes and there is a problem with the regular brakes. See *Brake System Warning Light* ⇨ *118*.

Lane Departure Warning (LDW) Light

If equipped, this light comes on briefly while starting the vehicle. If it does not come on, have the vehicle serviced.

This light is green if LDW is on and ready to operate.

This light changes to amber and flashes to indicate that the lane marking has been crossed without using a turn signal in that direction.

See *Lane Departure Warning (LDW)* ⇨ *192*.

Vehicle Ahead Indicator

If equipped, this indicator will display green when a vehicle is detected ahead.

See *Forward Collision Alert (FCA) System* ⇨ *188*.

Traction Off Light

This light comes on briefly while starting the engine. If it does not, have the vehicle serviced by your dealer. If the system is working normally, the indicator light then turns off.

The traction off light comes on when the Traction Control System (TCS) has been turned off by pressing and releasing the TCS/StabiliTrak button.

This light and the StabiliTrak OFF light come on when StabiliTrak is turned off.

If the TCS is off, wheel spin is not limited. Adjust driving accordingly.

See *Traction Control/Electronic Stability Control* ⇨ *180*.

StabiliTrak OFF Light

This light comes on briefly while starting the engine. If it does not, have the vehicle serviced by your dealer.

This light comes on when the StabiliTrak system is turned off. If StabiliTrak is off, the Traction Control System (TCS) is also off.

If StabiliTrak and TCS are off, the system does not assist in controlling the vehicle. Turn on the TCS and the StabiliTrak systems, and the warning light turns off.

See *Traction Control/Electronic Stability Control* ⇨ *180*.

Traction Control System (TCS)/StabiliTrak Light

The StabiliTrak or Traction Control System (TCS) indicator/warning light comes on briefly when the engine is started.

If the light does not come on, have the vehicle serviced by your dealer. If the system is working normally, the indicator light turns off.

If the light is on and not flashing, the TCS, and potentially the StabiliTrak system have been disabled.

If the indicator/warning light is on and flashing, the TCS and/or the StabiliTrak system is actively working.

See *Traction Control/Electronic Stability Control* ⇨ *180*.

Tire Pressure Light

For vehicles with the Tire Pressure Monitor System (TPMS), this light comes on briefly when the engine is started. It provides information about tire pressures and the TPMS.

When the Light Is On Steady

This indicates that one or more of the tires are significantly underinflated.

Stop as soon as possible, and inflate the tires to the pressure value shown on the Tire and Loading Information label. See *Tire Pressure* ⇨ *242*.

When the Light Flashes First and Then Is On Steady

If the light flashes for about a minute and then stays on, there may be a problem with the TPMS. If the problem is not corrected, the light will come on at every ignition cycle. See *Tire Pressure Monitor Operation* ⇨ *245*.

Engine Oil Pressure Light

Caution

Lack of proper engine oil maintenance can damage the engine. Driving with the engine oil

(Continued)

Caution (Continued)

low can also damage the engine. The repairs would not be covered by the vehicle warranty. Check the oil level as soon as possible. Add oil if required, but if the oil level is within the operating range and the oil pressure is still low, have the vehicle serviced. Always follow the maintenance schedule for changing engine oil.

This light should come on briefly as the engine is started. If it does not come on, have the vehicle serviced by your dealer.

If the light comes on and stays on, it means that oil is not flowing through the engine properly. The vehicle

could be low on oil and might have some other system problem. See your dealer.

Low Fuel Warning Light

This light comes on for a few seconds when the ignition is turned on as a check to indicate it is working. If it does not come on, have it fixed.

The low fuel warning light comes on and a chime sounds periodically when the vehicle is low on fuel. The light turns off when fuel is added to the fuel tank.

Immobilizer Light

The immobilizer light should come on briefly as the engine is started. If it does not come on, have the vehicle serviced by your dealer. If the system is working normally, the indicator light turns off.

If the light stays on and the engine does not start, there could be a problem with the immobilizer system. See *Immobilizer Operation* ⇨ *40*.

High-Beam On Light

This light comes on when the high-beam headlamps are in use.

See *Headlamp High/Low-Beam Changer* ⇨ *138*.

Front Fog Lamp Light

For vehicles with front fog lamps, this light comes on when the front fog lamps are in use.

The light goes out when the front fog lamps are turned off. See *Front Fog Lamps* ⇨ *141* for more information.

Lamps On Reminder

This light comes on when the exterior lamps are in use. See *Exterior Lamp Controls* ⇨ *138*.

Cruise Control Light

For vehicles with cruise control, the cruise control light is white when the cruise control is on and ready, and turns green when the cruise control is set and active.

The light turns off when the cruise control is turned off. See *Cruise Control* ⇨ *182*.

Information Displays

Driver Information Center (DIC) (Base Level)

The DIC displays information about your vehicle. It also displays warning messages if a system problem is detected. See *Vehicle Messages* ⇨ *127*. All messages appear in the DIC display in the center of the instrument cluster.

DIC Operation and Displays

The DIC has different displays which can be accessed by using the DIC buttons on the turn signal lever.

DIC Buttons

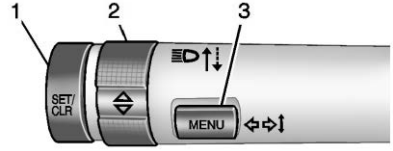

SET/CLR : Press to set or clear the menu item displayed.

⇕ **:** Turn the band to scroll through the items in each menu.

MENU : Press to display the Trip/Fuel Menu and the Vehicle Information Menu. This button is also used to return to or exit the last screen displayed on the DIC.

Trip/Fuel Menu (TRIP) Items

Press MENU on the turn signal lever until the Trip/Fuel menu displays. Use ⇕ to scroll through the menu items. Not all items are available on every vehicle. The following is a list of all possible menu items:

Digital Speedometer : Displays how fast the vehicle is moving in either kilometers per hour (km/h) or miles per hour (mph). The speedometer cannot be reset.

Trip 1 or Trip 2, Average Fuel Economy : Displays the current distance traveled, in either kilometers (km) or miles (mi), from the last reset for the trip odometer. The trip odometer can be reset to

zero by pressing and holding the SET/CLR button while the trip odometer display is showing.

Also displays the approximate average liters per 100 kilometers (L/100 km) or miles per gallon (mpg). This number is based on the number of L/100 km (mpg) recorded since the last time this menu item was reset. This number reflects only the approximate average fuel economy that the vehicle has right now, and will change as driving conditions change. Reset the average consumption by pressing SET/CLR when it is displayed.

Fuel Range : Displays the approximate distance the vehicle can be driven without refueling. The fuel range estimate is based on an average of the vehicle's fuel economy over recent driving history and the amount of fuel remaining in the fuel tank. Fuel range cannot be reset.

Instantaneous Fuel Economy : The center displays the approximate instantaneous fuel economy.

Navigation : Used for the OnStar Turn-by-Turn guidance. See *OnStar Overview* ⇨ *306*.

Vehicle Information Menu (VEHICLE) Items

Press MENU on the turn signal lever until the Vehicle menu is displayed. Use ⇕ to scroll through the menu items. Not all items are available on every vehicle. The following is a list of all possible menu items:

Remaining Oil Life : Displays an estimate of the oil's remaining useful life. If REMAINING OIL LIFE 99% is displayed, that means 99% of the current oil life remains.

When the remaining oil life is low, the CHANGE ENGINE OIL SOON message will appear on the display. The oil should be changed as soon as possible. See *Engine Oil* ⇨ *206*. In addition to the engine oil life system monitoring the oil life, additional maintenance is recommended in the Maintenance Schedule in this manual. See *Maintenance Schedule* ⇨ *278*.

The Oil Life display must be reset after each oil change. Do not reset the Oil Life display accidentally at any time other than when the oil has just been changed. It cannot be reset accurately until the next oil change. To reset the engine oil life system, see *Engine Oil Life System* ⇨ *209*.

Tire Pressure : Displays a vehicle with the approximate pressures of all four tires. Tire pressure is displayed in either kilopascal (kPa) or in pounds per square inch (psi). See *Tire Pressure Monitor System* ⇨ *244* and *Tire Pressure Monitor Operation* ⇨ *245*.

Units : Move ⇕ to change between Metric or US when the Unit display is active. Press SET/CLR to confirm the setting. This will change the displays on the DIC to the type of measurements you select.

Driver Information Center (DIC) (Uplevel)

The Driver Information Center (DIC) displays information about the vehicle. It also displays warning messages if a system problem is detected. See *Vehicle Messages* ⇨ *127*. All messages appear in the DIC display in the center of the instrument cluster.

The vehicle may also have features that can be customized through the controls on the radio. See *Vehicle Personalization* ⇨ *128*.

DIC Operation and Displays

The DIC has different displays which can be accessed by using the DIC buttons on the turn signal lever. The DIC displays trip, fuel, and vehicle system information, and warning messages if a system problem is detected.

The bottom of the DIC display shows the position of the shift lever and the odometer. It may also show the direction the vehicle is driving.

In cold weather the DIC display may change slowly. This is normal and will move more quickly as the vehicle's interior temperature rises.

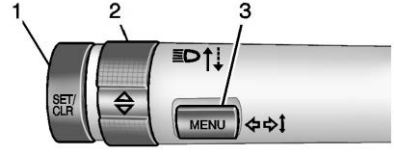

Use the controls to open and scroll through the different items and displays.

SET/CLR : Press to set or clear the menu item displayed.

⇕ **:** Turn the band to scroll through the items in each menu.

MENU : Press to display the Trip/Fuel Menu and the Vehicle Information Menu. This button is also used to return to or exit the last screen displayed on the DIC.

DIC Info Page Options

The info pages on the DIC can be turned on or off through the Options app.

1. Press MENU to access the cluster applications.
2. Use ⇕ to scroll to the Options menu and press SET/CLR.
3. Use ⇕ to choose the Info pages. Press SET/CLR to select.
4. Select Edit List.
5. Use ⇕ to move through the list of possible information displays.
6. Press SET/CLR while an item is highlighted to select or deselect that item. When an item is selected, a checkmark will appear next to it.
7. To exit, scroll to Exit and select.

DIC Menu Items

Press MENU on the turn signal lever until the Info menu is displayed. Use ⇕ scroll through the menu items. Not all items are available on every vehicle.

- Digital Speedometer

- Trip A or B, Average Fuel Economy
- Fuel Range
- Oil Life
- Tire Pressure
- Fuel Economy

Digital Speedometer

The speedometer shows how fast the vehicle is moving in either kilometers per hour (km/h) or miles per hour (mph). The speedometer cannot be reset.

Trip A or Trip B, Average Fuel Economy

Displays the current distance traveled, in either kilometers (km) or miles (mi), from the last reset for the trip odometer. The trip odometer can be reset to zero by pressing and holding the reset stem in the cluster while the trip odometer display is showing.

Also displays the approximate average liters per 100 kilometers (L/100 km) or miles per gallon (mpg). This number is based on the number of L/100 km (mpg) recorded since the last time this menu item was reset. This number reflects only the approximate average fuel economy that the vehicle has right now, and will change as driving conditions change. The average fuel economy can be reset by pressing SET/CLR while the Average Fuel Economy display is showing.

Fuel Range

This display shows the approximate distance the vehicle can be driven without refueling. The fuel range estimate is based on an average of the vehicle's fuel economy over recent driving history and the amount of fuel remaining in the fuel tank. Fuel range cannot be reset.

Oil Life

This display shows an estimate of the oil's remaining useful life. If OIL LIFE 99% REMAINING is displayed, that means 99% of the current oil life remains.

When the remaining oil life is low, the CHANGE ENGINE OIL SOON message will appear on the display. The oil should be changed as soon as possible. See *Engine Oil* ⇨ *206*. In addition to the Engine Oil Life System monitoring the oil life, additional maintenance is recommended in the Maintenance Schedule in this manual. See *Maintenance Schedule* ⇨ *278* for more information.

Remember, the Oil Life display must be reset after each oil change. It will not reset itself. Also, be careful not to reset the Oil Life display accidentally at any time other than when the oil has just been changed. It cannot be reset accurately until the next oil change. To reset the Engine Oil Life System, press SET/CLR while the Remaining Oil Life display is active. See *Engine Oil Life System* ⇨ *209*.

Tire Pressure

The display will show a vehicle with the approximate pressures of all four tires. Tire pressure is displayed in either kilopascal (kPa) or pounds

per square inch (psi).
See *Tire Pressure Monitor System* ⇨ *244* and *Tire Pressure Monitor Operation* ⇨ *245* for more information.

Fuel Economy

The center displays the approximate instantaneous fuel economy as a number and bar graph. Displayed above the bar graph is a running average of fuel economy for the most recently travelled selected distance. Displayed below the bar graph is the best average fuel economy that has been achieved for the selected distance. The selected distance is displayed at the top of the page as “last xxx mi/km”.

Press SET/CLR to select the distance or reset best value.

Hold SET/CLR to reset the best average fuel economy. After reset, the best value displays until the selected distance has been travelled. The display provides information on how current driving behavior affects the running average and how well recent driving compares to the best that has been achieved for the selected distance.

Compass

The vehicle has a compass display in the DIC. See *Compass* ⇨ *106* for more information.

Vehicle Messages

Messages displayed on the DIC indicate the status of the vehicle or some action that may be needed to correct a condition. Multiple messages may appear one after another.

The messages that do not require immediate action can be acknowledged and cleared by pressing SET/CLR. The messages that require immediate action cannot be cleared until that action is performed.

All messages should be taken seriously; clearing the message does not correct the problem.

If a SERVICE message appears, see your dealer.

Follow the instructions given in the messages. The system displays messages regarding the following topics:

- Service Messages
- Fluid Levels
- Vehicle Security

- Brakes
- Ride Control Systems
- Driver Assistance Systems
- Cruise Control
- Lighting and Bulb Replacement
- Wiper/Washer Systems
- Doors and Windows
- Seat Belts
- Airbag Systems
- Engine and Transmission
- Tire Pressure
- Battery

Engine Power Messages

ENGINE POWER IS REDUCED

This message displays when the vehicle's propulsion power is reduced. Reduced propulsion power can affect the vehicle's ability to accelerate. If this message is on, but there is no observed reduction in performance, proceed to your destination. The performance may be reduced the next time the vehicle is driven. The vehicle may be driven while this message is on, but maximum acceleration and speed may be reduced. Anytime this message stays on, or displays repeatedly, the vehicle should be taken to your dealer for service as soon as possible.

Vehicle Speed Messages

SPEED LIMITED TO XXX KM/H (MPH)

This message shows that the vehicle speed has been limited to the speed displayed. The limited speed is a protection for various propulsion and vehicle systems, such as lubrication, thermal, suspension, Teen Driver if equipped, or tires.

Vehicle Personalization

Use the audio system controls to access the personalization menus for customizing vehicle features.

The following are all possible personalization features. Depending on the vehicle, some may not be available.

To access the personalization menus:

1. Touch SETTINGS on the Home Page of the infotainment display.
2. Touch the desired feature to display a list of available options.
3. Touch to select the desired feature setting.
4. Press BACK on the center stack or touch < on the infotainment display to return to the previous menu or exit.

Personalization Menus

The following list of features may be available:

- Time and Date
- Language
- Valet Mode
- Radio
- Vehicle
- Bluetooth
- Apple CarPlay
- Android Auto
- Voice
- Display
- Rear Camera
- Return to Factory Settings
- Software Information
- Wi-Fi

Each menu is detailed in the following information.

Time and Date

Manually set the time and date. See *Clock* ⇨ *107*.

Language

Select Language, then select from the available language(s).

Valet Mode

To turn Valet Mode on and off, see "Valet Mode" under "Setting Radio Preferences" in the infotainment manual.

Radio

To manage the radio features, see "Radio" under "Settings" in the infotainment manual.

Vehicle

Select and the following may be displayed:

- Climate and Air Quality
- Collision/Detection Systems
- Comfort and Convenience
- Lighting
- Power Door Locks
- Remote Lock, Unlock, Start

Climate and Air Quality

Select and the following may be displayed:

- Auto Fan Speed
- Auto Defog
- Auto Rear Defog
- Ionizer

Auto Fan Speed

This feature will set the auto fan speed.

Select Low, Medium, or High.

Auto Defog

The front defog will automatically react to temperature and humidity conditions that may cause fogging.

Select Off or On.

Auto Rear Defog

This allows the Auto Rear Defog to be turned on or off. This feature will automatically turn on the rear window defogger when it is cold outside.

Select Off or On.

Ionizer

This allows the Ionizer to be turned off or on.

Select Off or On.

Collision/Detection Systems

Select and the following may be displayed:

- Rear Cross Traffic Alert
- Side Blind Zone Alert

Rear Cross Traffic Alert

Select Off or On. See *Rear Vision Camera (RVC)* ⇨ *184*.

Side Blind Zone Alert

Select Off or On. See *Side Blind Zone Alert (SBZA)* ⇨ *190*.

Comfort and Convenience

Select and the following may be displayed:

- Auto Memory Recall
- Easy Exit Driver Seat
- Chime Volume
- Reverse Tilt Mirror
- Auto Wipe in Reverse Gear

Auto Memory Recall

This feature automatically recalls the previously stored RKE Memory positions when entering the vehicle. See *Memory Seats* ⇨ *51*.

Select Off or On.

Easy Exit Driver Seat

This feature moves the seat rearward allowing the driver more room to exit the vehicle.

See *Memory Seats* ⇨ *51*.

Select Off or On.

Chime Volume

This allows the selection of the chime volume level.

Touch + or − to adjust the volume.

Reverse Tilt Mirror

When on, both the driver and passenger outside mirrors will tilt downward when the vehicle is shifted to R (Reverse) to improve visibility of the ground near the rear wheels. They will return to their previous driving position when the vehicle is shifted out of R (Reverse) or the engine is turned off.

Select Off or On.

Auto Wipe in Reverse Gear

When on and the front wiper is on, the rear wiper will automatically activate when the vehicle is shifted to R (Reverse).

Select Off or On.

Lighting

Select and the following may be displayed:

- Vehicle Locator Lights
- Exit Lighting

Vehicle Locator Lights

This feature will flash the exterior lamps when 🔓 on the Remote Keyless Entry (RKE) transmitter is pressed to locate the vehicle.

Select Off or On.

Exit Lighting

This allows the selection of how long the exterior lamps stay on when leaving the vehicle when it is dark outside.

Select Off, 30 Seconds, 60 Seconds, or 120 Seconds.

Power Door Locks

Select and the following may be displayed:

- Unlocked Door Anti Lock Out
- Auto Door Unlock
- Delayed Door Lock

Unlocked Door Anti Lock Out

When on, this feature will keep the driver door from locking when the door is open. If Off is selected, the Delayed Door Lock menu will be available.

Select Off or On.

Auto Door Unlock

This allows selection of which of the doors will automatically unlock when the vehicle is shifted into P (Park).

Select Off, All Doors, or Driver Door.

Delayed Door Lock

When on, this feature will delay the locking of the doors. To override the delay, press the power door lock switch on the door.

Select Off or On.

Remote Lock, Unlock, Start

Select and the following may be displayed:

- Remote Unlock Light Feedback
- Remote Lock Feedback
- Remote Door Unlock
- Remote Start Auto Heat Seats
- Passive Door Unlock
- Passive Door Lock
- Remote Left in Vehicle Alert

Remote Unlock Light Feedback

When on, the exterior lamps will flash when unlocking the vehicle with the RKE transmitter.

Select Off or Flash Lights.

Remote Lock Feedback

This allows selection of what type of feedback is given when locking the vehicle with the RKE transmitter.

Select Off, Lights and Horn, Lights Only, or Horn Only.

Remote Door Unlock

This allows selection of which doors will unlock when pressing 🔓 on the RKE transmitter.

When set to Driver Door, the driver door will unlock the first time 🔓 is pressed and all doors will unlock when 🔓 is pressed a second time. When set to All Doors, all of the doors will unlock at the first press of 🔓.

Select All Doors or Driver Door.

Remote Start Auto Heat Seats

If equipped and turned on, this feature will turn on the heated seats when using remote start on cold days.
See *Heated Front Seats* ⇨ *53* and *Remote Vehicle Start* ⇨ *33*.

Select Off or On.

Passive Door Unlock

This allows the selection of what doors will unlock when using the button on the driver door to unlock the vehicle.

Select All Doors or Driver Door.

Passive Door Lock

This allows passive locking to be turned on or off and selects feedback. See *Remote Keyless Entry (RKE) System Operation* ⇨ *27*.

Select Off, On with Horn Chirp, or On.

Remote Left in Vehicle Alert

This feature sounds an alert when the RKE transmitter is left in the vehicle. This menu also enables Remote No Longer in Vehicle Alert.

Select Off or On.

Bluetooth

Select and the following may be displayed:

- Pair New Device
- Device Management
- Ringtones
- Voice Mail Numbers
- Text Message Alerts

Pair New Device

Select to pair a new device. See “Pairing” in “Infotainment Controls” under “Bluetooth” in the infotainment manual.

Device Management

Select to connect to a different phone source, disconnect a phone, or delete a phone.

Ringtones

Touch to change the ring tone for the specific phone. The phone does not need to be connected to change the ring tone.

Voice Mail Numbers

This feature displays the voice mail number for all connected phones. To change the voice mail number, touch the edit icon. Type a new number, then touch SAVE.

Text Message Alerts

This allows the feature to be turned on or off.

Select Off or On.

Apple CarPlay

Select and the following may display:

- Apple CarPlay
- Manage Apple CarPlay Devices

Apple CarPlay

This feature allows Apple devices to be connected to the infotainment system through a USB port.

Select Off or On.

Manage Apple CarPlay Devices

Select to manage Apple devices. Apple CarPlay must be on for this feature to be accessed.

Android Auto

Select and the following may display:

- Android Auto
- Manage Android Auto Devices

Android Auto

This feature allows Android devices to be connected to the infotainment system through a USB port.

Select Off or On.

Manage Android Auto Devices

Select to manage Android devices. Android Auto must be on for this feature to be accessed.

Voice

Select and the following may be displayed:

- Confidence Threshold
- Prompt Length
- Audio Feedback Speed
- Display “What Can I Say?” Tips

Confidence Threshold

This feature allows the adjustment of the sensitivity of the speech recognition system.

Select Confirm More or Confirm Less.

Prompt Length

This feature adjusts the voice prompt length.

Select Short or Long.

Audio Feedback Speed

This feature adjusts the audio feedback speed.

Select Slow, Medium, or Fast.

Display “What Can I Say?” Tips

This feature gives tips on what to say when using voice recognition.

Select Off or On.

Display

Select and the following may be displayed:

- Calibrate Touchscreen
- Turn Display Off

Calibrate Touchscreen

Select to calibrate the touchscreen, then follow the prompts.

Turn Display Off

Select to turn the display off. Touch anywhere on the infotainment display area or press any controls on the radio center stack to turn the display on.

Rear Camera

Select and the following may be displayed:

- Guidance Lines
- Rear Park Assist Symbols

Guidance Lines

Select to turn Off or On. See *Rear Vision Camera (RVC)* ⇨ *184*.

Rear Park Assist Symbols

Select to turn Off or On.

Return to Factory Settings

Select and the following may be displayed:

- Restore Vehicle Settings
- Clear All Private Data
- Restore Radio Settings

Restore Vehicle Settings

This allows selection of restoring vehicle settings.

Select Restore or Cancel.

Clear All Private Data

This allows selection to clear all private information from the vehicle.

Select Delete or Cancel.

Restore Radio Settings

This allows selection to restore radio settings.

Select Restore or Cancel.

Software Information

Select to view or update the infotainment system current software information.

Wi-Fi

Select and the following may display:

- Wi-Fi
- Manage Wi-Fi Networks

Wi-Fi

This feature allows Wi-Fi networks to be turned off or on.

Select Off or On.

Manage Wi-Fi Networks

Select to manage Wi-Fi networks. Wi-Fi must be on for this feature to be accessed.

Universal Remote System

See *Radio Frequency Statement* ⇨ *302*.

Universal Remote System Programming

If equipped, these buttons are in the overhead console.

This system can replace up to three remote control transmitters used to activate devices such as garage door openers, security systems, and home automation devices. These

instructions refer to a garage door opener, but can be used for other devices.

Do not use the Universal Remote system with any garage door opener that does not have the stop and reverse feature. This includes any garage door opener model manufactured before April 1, 1982.

Read these instructions completely before programming the Universal Remote system. It may help to have another person assist with the programming process.

Keep the original hand-held transmitter for use in other vehicles as well as for future programming. Erase the programming when vehicle ownership is terminated. See “Erasing Universal Remote System Buttons” later in this section.

To program a garage door opener, park outside directly in line with and facing the garage door opener receiver. Clear all people and objects near the garage door.

Make sure the hand-held transmitter has a new battery for quick and accurate transmission of the radio-frequency signal.

Programming the Universal Remote System

For questions or programming help, see www.homelink.com/gm or call 1-800-355-3515.

Programming involves time-sensitive actions, and may time out causing the procedure to be repeated.

To program up to three devices:

1. Hold the end of the hand-held transmitter about 3 to 8 cm (1 to 3 in) away from the Universal Remote system buttons with the indicator light in view. The hand-held transmitter was supplied by the manufacturer of the garage door opener receiver.
2. At the same time, press and hold both the hand-held transmitter button and one of the three Universal Remote system buttons to be used to operate the garage door. Do not release either button until the indicator light changes from a slow to a rapid flash. Then release both buttons.

   Some garage door openers may require substitution of Step 2 with the procedure under “Radio Signals for Canada and Some Gate Operators” later in this section.
3. Press and hold the newly programmed Universal Remote system button for five seconds while watching the indicator light and garage door activation.
   - If the indicator light stays on continuously or the garage door moves when the button is pressed, then programming is complete. There is no need to complete Steps 4–6.
   - If the indicator light does not come on or the garage door does not move, a

second button press may be required. For a second time, press and hold the newly programmed button for five seconds. If the light stays on or the garage door moves, programming is complete.

- If the indicator light blinks rapidly for two seconds, then changes to a solid light and the garage door does not move, continue with programming Steps 4–6.

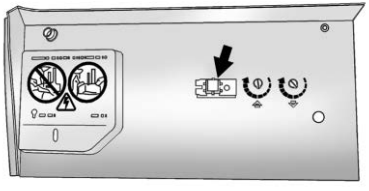

Learn or Smart Button

4. After completing Steps 1–3, locate the Learn or Smart button inside the garage on the garage door opener receiver. The name and color of the button may vary by manufacturer.
5. Press and release the Learn or Smart button. Step 6 must be completed within 30 seconds of pressing this button.
6. Inside the vehicle, press and hold the newly programmed Universal Remote system button for two seconds and then release it. If the garage door does not move or the lamp on the garage door opener receiver does not flash, press and hold the same button a second time for two seconds, then release it. Again, if the door does not move or the garage door lamp does not flash, press and hold the same button a third time for two seconds, then release it.

The Universal Remote system should now activate the garage door.

Repeat the process for programming the two remaining buttons.

Radio Signals for Canada and Some Gate Operators

For questions or programming help, see www.homelink.com/gm or call 1-800-355-3515.

Canadian radio-frequency laws and some U.S. gate operators require transmitter signals to time out or quit after several seconds of transmission. This may not be long enough for the Universal Remote system to pick up the signal during programming.

If the programming did not work, replace Step 2 under “Programming the Universal Remote System” with the following:

Press and hold the Universal Remote system button while pressing and releasing the hand-held transmitter button every two seconds until the signal has been successfully accepted by the Universal Remote system. The Universal Remote system indicator

light will flash slowly at first and then rapidly. Proceed with Step 3 under “Programming the Universal Remote System” to complete.

Universal Remote System Operation

Using the Universal Remote System

Press and hold the appropriate Universal Remote system button for at least one-half second. The indicator light will come on while the signal is being transmitted.

Erasing Universal Remote System Buttons

Erase all programmed buttons when vehicle ownership is terminated.

To erase:

1. Press and hold the two outside buttons until the indicator light begins to flash. This should take about 10 seconds.
2. Release both buttons.

Reprogramming a Single Universal Remote System Button

To reprogram any of the system buttons:

1. Press and hold any one of the buttons. Do not release the button.
2. The indicator light will begin to flash after 20 seconds. Without releasing the button, proceed with Step 1 under “Programming the Universal Remote System.”

Lighting

Exterior Lighting
Exterior Lamp Controls 138
Headlamp High/Low-Beam Changer 138
Flash-to-Pass 139
Daytime Running Lamps (DRL) 139
Automatic Headlamp System 139
Hazard Warning Flashers 140
Turn and Lane-Change Signals 140
Front Fog Lamps 141

Interior Lighting
Instrument Panel Illumination Control 141
Courtesy Lamps 141
Dome Lamps 141
Reading Lamps 142

Lighting Features
Entry Lighting 142
Exit Lighting 142
Battery Power Protection 143
Exterior Lighting Battery Saver 143

Exterior Lighting

Exterior Lamp Controls

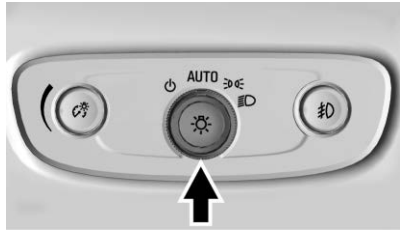

The exterior lamp control is on the instrument panel to the left of the steering column.

There are four positions:

⏻ **:** Turns the exterior lamps off and deactivates the AUTO mode. Turn ⏻ again to reactivate the AUTO mode.

In Canada, the headlamps will automatically reactivate when the vehicle is shifted out of P (Park).

AUTO : Turns the exterior lamps on and off automatically depending on outside lighting.

: Turns on the parking lamps including all lamps, except the headlamps.

: Turns on the headlamps together with the parking lamps and instrument panel lights. A warning chime sounds if the driver door is opened when the ignition is off and the headlamps are on.

Headlamp High/ Low-Beam Changer

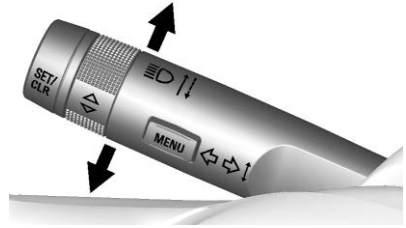

: Push the turn signal lever away from you and release, to turn the high beams on.

To return to low beams, push the lever again or pull it toward you and release.

This indicator light turns on in the instrument cluster when the high-beam headlamps are on.

Flash-to-Pass

To flash the high beams, pull the turn signal lever all the way toward you. Then release it.

Daytime Running Lamps (DRL)

Daytime Running Lamps can make it easier for others to see the front of your vehicle during the day. Fully functional DRL are required on all vehicles first sold in Canada.

A light sensor on top of the instrument panel makes the DRL work, so be sure it is not covered.

The DRL system makes the low-beam headlamps come on at a reduced brightness when the following conditions are met:

- The ignition is on.
- The exterior lamp control is in AUTO.
- The engine is running.

When the DRL are on, only the low-beam headlamps, at a reduced level of brightness, will be on. The taillamps, sidemarker, instrument panel, and other lamps will not be on.

The headlamps automatically change from DRL to the regular headlamps depending on the darkness of the surroundings. The other lamps that come on with the headlamps will also come on.

When it is bright enough outside, the headlamps go off and the DRL come on.

The DRL turn off when the headlamps are turned to ⏻ or the ignition is off. For vehicles first sold in Canada, this control only works when the vehicle is parked.

Automatic Headlamp System

When it is dark enough outside and the exterior lamp control is in the automatic position, the headlamps come on automatically. See *Exterior Lamp Controls* ⇨ *138*.

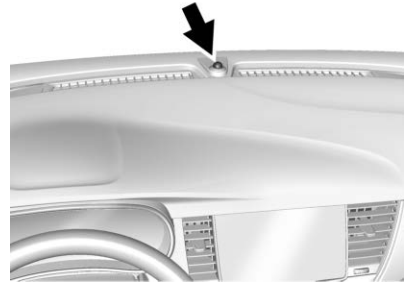

The vehicle has a light sensor on top of the instrument panel. Make sure it is not covered, or the headlamps will be on when they are not needed.

The system may also turn on the headlamps when driving through a parking garage or tunnel.

If the vehicle is started in a dark garage, the automatic headlamp system comes on immediately. If it is light outside when the vehicle leaves the garage, there is a slight delay before the automatic headlamp system changes to the DRL. During that delay, the instrument cluster may not be as bright as usual. Make sure the instrument panel brightness control is in the full bright position. See *Instrument Panel Illumination Control* ⇨ *141*.

Lights On with Wipers

If the windshield wipers are activated in daylight with the engine on, and the exterior lamp control is in AUTO, the headlamps, parking lamps, and other exterior lamps come on. The transition time for the lamps coming on varies based on wiper speed. When the wipers are not operating, these lamps turn off. Move the exterior lamp control to ⏻ or ≋ to disable this feature.

Hazard Warning Flashers

⚠ **:** Press and momentarily hold to make the front and rear turn signal lamps flash on and off. This warns others that you are having trouble. Press and momentarily hold again to turn the flashers off.

Turn and Lane-Change Signals

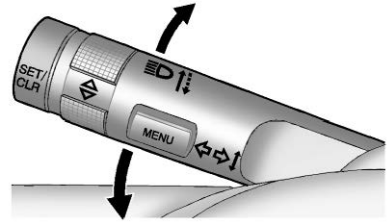

Move the lever all the way up or down to signal a turn.

An arrow on the instrument cluster will flash in the direction of the turn or lane change.

Raise or lower the lever until the arrow starts to flash to signal a lane change. The turn signal flashes three times.

The lever returns to its starting position when it is released.

If after signaling a turn or lane change the arrow flashes rapidly or does not come on, a signal bulb may be burned out. Replace any

burned out bulbs. If a bulb is not burned out, check the fuse. See *Fuses and Circuit Breakers* ⇨ *228*.

Front Fog Lamps

The fog lamps button is on the instrument panel beside the steering wheel.

To turn on the fog lamps, the ignition and the headlamps or parking lamps must be on.

: If equipped, press to turn on or off. An indicator light on the instrument cluster comes on when the fog lamps are on.

Some localities have laws that require the headlamps to be on along with the fog lamps.

Interior Lighting

Instrument Panel Illumination Control

The brightness of the instrument cluster display, infotainment display and controls, steering wheel controls, and all other illuminated controls, as well as feature status indicators can be adjusted.

The knob for this feature is on the instrument panel beside the steering column.

Push the knob in all the way until it extends out and then turn the knob clockwise or counterclockwise to brighten or dim the lights.

Courtesy Lamps

The courtesy lamps come on automatically when any door is opened and the dome lamp is in the door position.

Dome Lamps

Front and Rear Dome Lamps

The front dome lamp controls are in the overhead console.

: Press to turn the lamps off, even when a door is open.

: When the button is returned to the middle position, the lamps turn on automatically when a door is opened.

: Press to turn on the dome lamps.

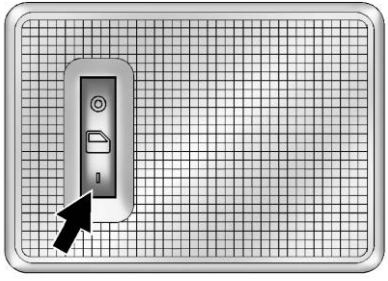

The rear dome lamp controls are in the headliner above the rear seats.

: Press to turn the lamps off, even when a door is open.

: When the button is returned to the middle position, the lamps turn on automatically when a door is opened.

: Press to turn on the dome lamps.

Reading Lamps

The front reading lamps are in the overhead console.

or : Press to turn each lamp on or off.

Lighting Features

Entry Lighting

Some exterior lamps and interior lamps turn on briefly at night, or in areas with limited lighting, when is pressed on the Remote Keyless Entry (RKE) transmitter. When a door is opened, the interior lamps come on. They stay on for about 20 seconds. When all of the doors have been closed or the ignition is turned on, they gradually fade out.

This feature can be changed. See “Vehicle Locator Lights” under *Vehicle Personalization* ⇨ *128*.

Exit Lighting

Some exterior lamps and interior lights come on at night, or in areas with limited lighting, when the driver door is opened after the ignition is turned off. The interior lamps come on after the ignition is turned off. The exterior lamps and interior lamps remain on for a set amount of time, then automatically turn off.

The exterior lamps turn off immediately by turning the exterior lamp control off.

This feature can be changed. See *Vehicle Personalization* ⇨ *128*.

Battery Power Protection

The battery saver feature protects against draining the vehicle's battery.

If some interior lamps or the manual parking lamps or headlamps are left on and the ignition is turned off, the battery rundown protection system automatically turns the lamp off after some time.

To restart the 10-minute timer, turn the exterior lamp control to the ⏻ position and then back to the 🔅 or 🔆 position. To keep the lamps on for more than 10 minutes, the ignition must be on or in ACC/ACCESSORY.

Exterior Lighting Battery Saver

The exterior lamps turn off about 10 minutes after the ignition is turned off, if the parking lamps or headlamps have been manually left on. This protects against draining the battery. To restart the 10-minute timer, turn the exterior lamp control to the ⏻ position and then back to the 🔅 or 🔆 position.

To keep the lamps on for more than 10 minutes, the ignition must be on or in ACC/ACCESSORY.

Infotainment System

Introduction
Infotainment 144

Introduction

Infotainment

See the infotainment manual for information on the radio, audio players, phone, navigation system, and voice or speech recognition. It also includes information on settings.

Climate Controls

Climate Control Systems
Climate Control Systems 145
Dual Automatic Climate Control System 148

Air Vents
Air Vents 152

Maintenance
Air Intake 152
Passenger Compartment Air Filter 152
Service 153

Climate Control Systems

The heating, cooling, defrosting, and ventilation for the vehicle can be controlled with this system.

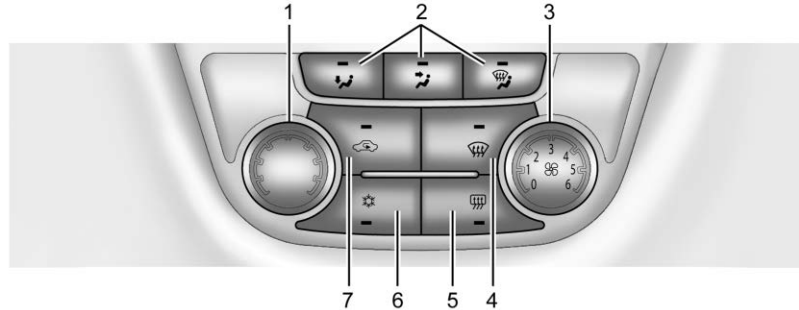

1. Temperature Control
2. Air Delivery Modes
3. Fan Control
4. Defrost
5. Rear Window Defogger
6. Air Conditioning or Comfort/ Eco Air Conditioning
7. Recirculation

Climate Control Influence on Stop/ Start Operation and Fuel Economy (If Equipped)

The climate control system depends on other vehicle systems for heat and power input. Certain climate control settings can lead to higher fuel usage and/or fewer auto stops.

The following are climate control settings that use more fuel:

- Comfort air conditioning mode.
- The defrost mode.
- Extreme temperature settings, such as LO or HI.
- High fan speed settings.

To help reduce fuel usage:

- Use eco air conditioning, instead of the comfort air conditioning.
- Select a temperature setting that is higher in hot weather and lower in cold weather.
- Turn off the air conditioning when it is not needed.
- Only use defrost to clear the windows.

: Turn the knob clockwise or counterclockwise to increase or decrease the fan speed. Turn the knob completely to 0 to turn off the fan and air conditioning compressor.

Temperature Control : Turn the knob clockwise or counterclockwise to increase or decrease the temperature setting.

Air Delivery Mode Control : Press , , or to change the direction of the airflow. Air delivery mode settings can be combined. An indicator light comes on in the selected mode button.

: Air is directed to the floor outlets.

: Air is directed to the instrument panel outlets.

: Air is directed to the windshield and side window vents.

: Press to clear the windshield of fog or frost more quickly. Air is directed to the windshield.

For best results, clear all snow and ice from the windshield before defrosting.

Do not drive the vehicle until all the windows are clear.

Air Conditioning

: For non-stop/start vehicles, press to turn the air conditioning on or off. If the fan is turned off or the outside temperature falls below freezing, the air conditioner will not run and the indicator light turns off.

: For stop/start vehicles, press to cycle between the off, comfort, and eco air conditioning modes. The indicator will be lit in comfort and eco modes and turns off when there is no air conditioning function. If the fan is turned off or the outside temperature falls below freezing, the air conditioning compressor will not work.

For comfort a/c, press . The indicator will turn amber. When the indicator light is on, the air conditioner runs automatically to cool the air inside the vehicle or to dry the air needed to defog the windshield faster.

For eco a/c, press again. The indicator will turn green. This setting balances fuel economy and air conditioning comfort. In warm

weather conditions, auto stops may occur more frequently and the vehicle interior may be warmer as compared to the comfort air conditioning. This setting allows higher humidity inside the vehicle and window fogging before the engine restarts.

Pressing during an auto stop may restart the engine to prevent window fogging. To reach comfort levels quickly during an auto stop, the engine will restart if the air conditioner is off and is selected.

If temperature controls are adjusted cooler during an auto stop, the engine may restart to ensure that comfort is reached.

: Press to turn on the recirculation. An indicator light comes on. Air is recirculated inside the vehicle. It helps to quickly cool the air inside the vehicle or reduce entry of outside air and odors. To improve fuel efficiency and to cool the vehicle faster, recirculation may be automatically selected in warm weather when the temperature is set to the coldest setting. The recirculation light will not come on. Press to select recirculation; press it again to select outside air.

Rear Window Defogger

: Press to turn the rear window defogger on or off. An indicator light on the button comes on to show that the rear window defogger is on.

The defogger only works when the ignition is on. The defogger turns off if the ignition is off or in ACC/ACCESSORY.

Do not drive the vehicle until all the windows are clear.

Caution

Do not use a razor blade or sharp object to clear the inside rear window. Do not adhere anything to the defogger grid lines in the rear glass. These actions may damage the rear defogger. Repairs would not be covered by the vehicle warranty.

Dual Automatic Climate Control System

The heating, cooling, and ventilation for the vehicle can be controlled with this system.

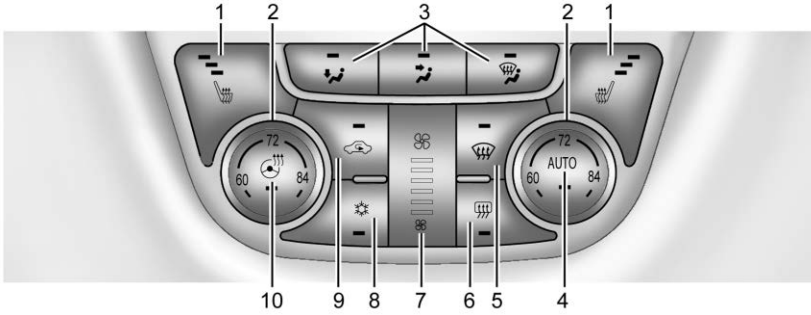

1. Driver and Passenger Heated Seats (If Equipped)
2. Driver and Passenger Temperature Controls
3. Air Delivery Modes
4. AUTO (Automatic Operation)
5. Defrost
6. Rear Window Defogger
7. Fan Controls
8. Air Conditioning or Comfort/ Eco Air Conditioning
9. Recirculation
10. Heated Steering Wheel (If Equipped)

Climate Control Influence on Stop/ Start Operation and Fuel Economy (If Equipped)

The climate control system depends on other vehicle systems for heat and power input. Certain climate control settings can lead to higher fuel usage and/or fewer auto stops.

The following are climate control settings that use more fuel:

- Comfort air conditioning mode.
- The defrost mode.
- Extreme temperature settings, such as LO or HI.
- High fan speed settings.

To help reduce fuel usage:

- Use the full automatic control as described under “Automatic Operation” following.
- Use eco air conditioning, instead of the comfort air conditioning.
- Select a temperature setting that is higher in hot weather and lower in cold weather.

- Turn off the air conditioning when it is not needed.
- Only use defrost to clear the windows.

Automatic Operation

The system automatically controls the fan speed, air delivery, air conditioning, and recirculation in order to heat or cool the vehicle to the desired temperature.

When AUTO is lit, all four functions operate automatically. Each function can also be manually set and the selected setting is displayed. Functions not manually set will continue to be automatically controlled, even if the AUTO indicator is not lit.

For automatic operation:

1. Press AUTO.
2. Set the temperature. Allow the system time to stabilize. Then adjust the temperature as needed for best comfort.

   To improve fuel efficiency and to cool the vehicle faster, recirculation may be automatically selected in warm weather. The recirculation light will not come on. Press to select recirculation; press it again to select outside air.

Manual Operation

: Press the lower button to decrease the fan speed. Pressing the lower button longer turns the fan and cooling off. Press the upper button to increase the fan speed. The selected fan speed is indicated by a number on the display screen. Press AUTO to return to automatic operation.

Air Delivery Modes : Press , , or to change the direction of the airflow. Air delivery mode settings can be combined. An indicator light comes on in the selected mode button.

Changing the mode cancels the automatic operation and the direction of the airflow is manually controlled. Press AUTO to return to automatic operation.

: Air is directed to the floor outlets.

: Air is directed to the instrument panel outlets.

: Air is directed to the windshield and side window vents.

: Press to clear the windshield of fog or frost more quickly. Air is directed to the windshield.

For best results, clear all snow and ice from the windshield before defrosting.

Air Conditioning

: For non-start/stop vehicles, press to turn the air conditioning on or off. If the fan is turned off or the outside temperature falls below freezing, the air conditioner will not run and the indicator light turns off.

Press AUTO to return to automatic operation. When the indicator light is on, the air conditioner runs automatically to cool the air inside the vehicle or to dry the air needed to defog the windshield faster.

: For stop/start vehicles, press to cycle between the off, comfort, and eco air conditioning modes. The indicator will be lit in comfort and eco modes and turns off when there is no air conditioning function. If the fan is turned off or the outside temperature falls below freezing, the air conditioning compressor will not work.

For comfort a/c, press . The indicator will turn amber. When the indicator light is on, the air conditioner runs automatically to cool the air inside the vehicle or to dry the air needed to defog the windshield faster.

For eco a/c, press again. The indicator will turn green. This setting balances fuel economy and air conditioning comfort. In warm weather conditions, auto stops may occur more frequently and the vehicle interior may be warmer as compared to the comfort air conditioning. This setting allows higher humidity inside the vehicle and window fogging before the engine restarts.

Pressing during an auto stop may restart the engine to prevent window fogging. To reach comfort levels quickly during an auto stop, the engine will restart if the air conditioner is off and AUTO or is selected.

If temperature controls are adjusted cooler during an auto stop, the engine may restart to ensure that comfort is reached.

: Press to turn on recirculation. An indicator light comes on. Air is recirculated to quickly cool the inside of the vehicle or reduce entry of outside air and odors.

Auto Defog : The climate control system may have a sensor to automatically detect high humidity inside the vehicle. When high humidity is detected, the climate control system may adjust to outside air supply and turn on the air conditioner. If the climate control system does not detect possible window fogging, it returns to normal operation. To turn Auto Defog off or on, see "Climate and Air Quality" under *Vehicle Personalization* ⇨ *128*.

Ionizer : If equipped with an ionizer, this feature helps to clean the air inside the vehicle and remove contaminants such as pollen, odors, and dust. To turn the ionizer on or off, see “Climate and Air Quality” under *Vehicle Personalization* ⇨ *128*.

Rear Window Defogger

: Press to turn the rear window defogger on or off. An indicator light on the button comes on to show that the rear window defogger is on.

The defogger only works when the ignition is on. The defogger turns off if the ignition is off or in ACC/ ACCESSORY.

The rear window defogger can be set to automatic operation; see "Climate and Air Quality" under *Vehicle Personalization* ⇨ *128*. When auto rear defog is selected, the rear window defogger turns on automatically when the interior temperature is cold and the outside temperature is about 4 °C (40 °F) and below. The auto rear defogger turns off automatically after about 10 minutes. At higher speeds, the rear window defogger may stay on continuously.

If equipped with heated outside mirrors, they turn on when the rear window defogger button is on and help to clear fog or frost from the surface of the mirrors. See *Heated Mirrors* ⇨ *41*.

Caution

Do not try to clear frost or other material from the inside of the front windshield and rear window with a razor blade or anything else that is sharp. This may

(Continued)

Caution (Continued)

damage the rear window defogger grid and affect the radio's ability to pick up stations clearly. The repairs would not be covered by the vehicle warranty.

or : If equipped, press to turn the heated seats on or off. See *Heated Front Seats* ⇨ *53*.

: If equipped, press to turn the heated steering wheel on or off. See *Heated Steering Wheel* ⇨ *103*.

Remote Start Climate Control Operation : If equipped with the remote vehicle start feature, the climate control system may run when the vehicle is started remotely. The system uses the driver's previous settings to heat or cool the inside of the vehicle. The rear defog may come on during remote start based on cold ambient conditions. The rear defog indicator light does not come on during a remote start. If the vehicle has front heated seats, they may come on during a remote start. The heated seat indicator lights do not come on during a remote start.
See *Remote Vehicle Start* ⇨ *33* and *Heated Front Seats* ⇨ *53*.

Sensors

The solar sensor, located on top of the instrument panel near the windshield, monitors the solar heat.

The climate control system uses the sensor information to adjust the temperature, fan speed, recirculation, and air delivery mode for best comfort.

If the sensor is covered, the automatic climate control system may not work properly.

Air Vents

Use the louvers located on the air vents to change the direction of the airflow.

Use the thumbwheels near the air vents to control the amount of airflow or to shut off the airflow.

Operation Tips

- Keep all outlets open whenever possible for best system performance.
- Keep the paths under all seats clear of objects to help circulate the air inside the vehicle more effectively.
- Clear away any ice, snow, or leaves from the air inlets at the base of the windshield that can block the flow of air into the vehicle.
- Clear snow off the hood to improve visibility and help decrease moisture drawn into the vehicle.
- Use of non-GM approved hood deflectors can adversely affect the performance of the system.

Maintenance

Air Intake

Clear away any ice, snow, or leaves from the air intake at the base of the windshield that can block the flow of air into the vehicle.

Passenger Compartment Air Filter

The filter removes dust, pollen, and other airborne irritants from outside air that is pulled into the vehicle.

The filter should be replaced as part of routine scheduled maintenance. See *Maintenance Schedule* ⇨ *278*. To find out what type of filter to use, see *Maintenance Replacement Parts* ⇨ *287*.

1. Open the glove box completely and disconnect the damper on the outboard side.

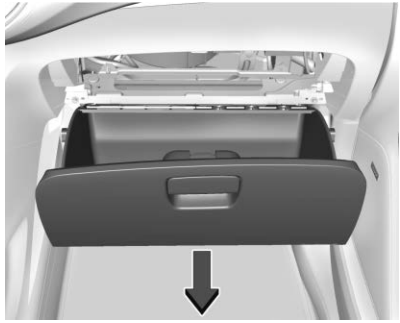

2. Push in both sides of the glove box and pull to remove.

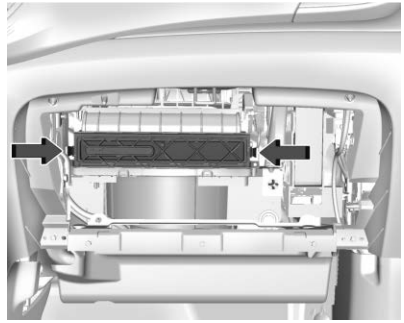

3. Open the filter cover by releasing tabs on both sides and pulling up the cover.
4. Replace the air filter.
5. Close the air filter cover and reinstall the glove box.

See your dealer if additional assistance is needed.

Service

All vehicles have a label underhood that identifies the refrigerant used in the vehicle. Always use the refrigerant and A/C compressor oil listed on the vehicle label. The refrigerant system should only be serviced by trained and certified technicians. The air conditioning evaporator should never be repaired or replaced by one from a salvage vehicle. It should only be replaced by a new evaporator to ensure proper and safe operation.

During service, all refrigerants should be reclaimed with proper equipment. Venting refrigerants directly to the atmosphere is harmful to the environment and may also create unsafe conditions based on inhalation, combustion, frostbite, or other health-based concerns.

Driving and Operating

Driving Information
Driver Behavior 155
Driving Environment 155
Vehicle Design 155
Distracted Driving 155
Defensive Driving 156
Drunk Driving 156
Control of a Vehicle 157
Braking 157
Steering 157
Off-Road Recovery 158
Loss of Control 158
Driving on Wet Roads 159
Hill and Mountain Roads 160
Winter Driving 160
If the Vehicle Is Stuck 162
Vehicle Load Limits 162

Starting and Operating
New Vehicle Break-In 166
Ignition Positions 166
Starting the Engine 168
Engine Heater 170
Retained Accessory Power (RAP) 171
Shifting Into Park 171
Shifting out of Park 172
Parking over Things That Burn 173
Extended Parking 173

Engine Exhaust
Engine Exhaust 174
Running the Vehicle While Parked 175

Automatic Transmission
Automatic Transmission 175
Manual Mode 177

Drive Systems
All-Wheel Drive 178

Brakes
Antilock Brake System (ABS) 178
Parking Brake 179
Brake Assist 180

Ride Control Systems
Traction Control/Electronic Stability Control 180

Cruise Control
Cruise Control 182

Driver Assistance Systems
Rear Vision Camera (RVC) . . . 184
Parking Assist 186
Forward Collision Alert (FCA) System 188
Side Blind Zone Alert (SBZA) 190
Lane Departure Warning (LDW) 192

Fuel
Fuel 193
California Fuel Requirements 194
Fuels in Foreign Countries . . . 194
Fuel Additives 194
Filling the Tank 194
Filling a Portable Fuel Container 196

Trailer Towing
General Towing Information 197

Conversions and Add-Ons
Add-On Electrical Equipment 197

Driving Information

Driver Behavior

Driving is an important responsibility. Driver behavior, the driving environment, and the vehicle's design all affect how well a vehicle performs.

Being aware of these factors can help in understanding how the vehicle handles and what can be done to avoid many types of crashes, including a rollover crash.

Most serious injuries and fatalities to unbelted occupants can be reduced or prevented by the use of seat belts. In a rollover crash, an unbelted person is significantly more likely to die than a person wearing a seat belt. In addition, avoiding excessive speed, sudden or abrupt turns, and drunken or aggressive driving can help make trips safer and avoid the possibility of a crash.

Driving Environment

Be prepared for driving in inclement weather, at night, or during other times where visibility or traction may be limited, such as on curves, slippery roads, or hilly terrain. Unfamiliar surroundings can also have hidden hazards.

Vehicle Design

Utility vehicles have a significantly higher rollover rate than other types of vehicles. This is because they have a higher ground clearance and a narrower track or shorter wheelbase than passenger cars, which makes them more capable for off-road driving. While these design characteristics provide the driver with a better view of the road, these vehicles do have a higher center of gravity than other types of vehicles. A utility vehicle does not handle the same as a vehicle with a lower center of gravity, like a car, in similar situations.

Safe driver behavior and understanding of the environment can help avoid a rollover crash in any type of vehicle, including utility vehicles.

Distracted Driving

Distraction comes in many forms and can take your focus from the task of driving. Exercise good judgment and do not let other activities divert your attention away from the road. Many local governments have enacted laws regarding driver distraction. Become familiar with the local laws in your area.

To avoid distracted driving, keep your eyes on the road, keep your hands on the steering wheel, and focus your attention on driving.

- Do not use a phone in demanding driving situations. Use a hands-free method to place or receive necessary phone calls.

- Watch the road. Do not read, take notes, or look up information on phones or other electronic devices.
- Designate a front seat passenger to handle potential distractions.
- Become familiar with vehicle features before driving, such as programming favorite radio stations and adjusting climate control and seat settings. Program all trip information into any navigation device prior to driving.
- Wait until the vehicle is parked to retrieve items that have fallen to the floor.
- Stop or park the vehicle to tend to children.
- Keep pets in an appropriate carrier or restraint.
- Avoid stressful conversations while driving, whether with a passenger or on a cell phone.

⚠ Warning

Taking your eyes off the road too long or too often could cause a crash resulting in injury or death. Focus your attention on driving.

Refer to the infotainment section for more information on using that system. Refer to the infotainment manual for more information on the navigation system, if equipped, including pairing and using a cell phone.

Defensive Driving

Defensive driving means “always expect the unexpected.” The first step in driving defensively is to wear the seat belt. See *Seat Belts* ⇨ *59*.

- Assume that other road users (pedestrians, bicyclists, and other drivers) are going to be careless and make mistakes. Anticipate what they might do and be ready.
- Allow enough following distance between you and the driver in front of you.
- Focus on the task of driving.

Drunk Driving

Death and injury associated with drinking and driving is a global tragedy.

⚠ Warning

Drinking and then driving is very dangerous. Your reflexes, perceptions, attentiveness, and judgment can be affected by even a small amount of alcohol. You can have a serious — or even fatal — collision if you drive after drinking.

Do not drink and drive or ride with a driver who has been drinking. Ride home in a cab; or if you are with a group, designate a driver who will not drink.

Control of a Vehicle

Braking, steering, and accelerating are important factors in helping to control a vehicle while driving.

Braking

Braking action involves perception time and reaction time. Deciding to push the brake pedal is perception time. Actually doing it is reaction time.

Average driver reaction time is about three-quarters of a second. In that time, a vehicle moving at 100 km/h (60 mph) travels 20 m (66 ft), which could be a lot of distance in an emergency.

Helpful braking tips to keep in mind include:

- Keep enough distance between you and the vehicle in front of you.
- Avoid needless heavy braking.
- Keep pace with traffic.

If the engine ever stops while the vehicle is being driven, brake normally but do not pump the brakes. Doing so could make the pedal harder to push down. If the engine stops, there will be some power brake assist but it will be used when the brake is applied. Once the power assist is used up, it can take longer to stop and the brake pedal will be harder to push.

Steering

Electric Power Steering

The vehicle has electric power steering. It does not have power steering fluid. Regular maintenance is not required.

If power steering assist is lost due to a system malfunction, the vehicle can be steered, but may require increased effort. See your dealer if there is a problem.

If the steering wheel is turned until it reaches the end of its travel and is held against that position for an extended period of time, power steering assist may be reduced.

If the steering assist is used for an extended period of time while the vehicle is not moving, power assist may be reduced.

Normal use of the power steering assist should return when the system cools down.

See your dealer if there is a problem.

Curve Tips

- Take curves at a reasonable speed.
- Reduce speed before entering a curve.
- Maintain a reasonable steady speed through the curve.
- Wait until the vehicle is out of the curve before accelerating gently into the straightaway.

Steering in Emergencies

- There are some situations when steering around a problem may be more effective than braking.

- Holding both sides of the steering wheel allows you to turn 180 degrees without removing a hand.
- The Antilock Brake System (ABS) allows steering while braking.

Off-Road Recovery

The vehicle's right wheels can drop off the edge of a road onto the shoulder while driving. Follow these tips:

1. Ease off the accelerator and then, if there is nothing in the way, steer the vehicle so that it straddles the edge of the pavement.
2. Turn the steering wheel about one-eighth of a turn, until the right front tire contacts the pavement edge.
3. Turn the steering wheel to go straight down the roadway.

Loss of Control

Skidding

There are three types of skids that correspond to the vehicle's three control systems:

- Braking Skid — wheels are not rolling.
- Steering or Cornering Skid — too much speed or steering in a curve causes tires to slip and lose cornering force.
- Acceleration Skid — too much throttle causes the driving wheels to spin.

Defensive drivers avoid most skids by taking reasonable care suited to existing conditions, and by not overdriving those conditions. But skids are always possible.

If the vehicle starts to slide, follow these suggestions:

- Ease your foot off the accelerator pedal and steer the way you want the vehicle to go. The vehicle may straighten out. Be ready for a second skid if it occurs.
- Slow down and adjust your driving according to weather conditions. Stopping distance can be longer and vehicle control can be affected when traction is reduced by water, snow, ice, gravel, or other material on the road. Learn to recognize warning clues — such as enough water, ice, or packed

snow on the road to make a mirrored surface — and slow down when you have any doubt.

- Try to avoid sudden steering, acceleration, or braking, including reducing vehicle speed by shifting to a lower gear. Any sudden changes could cause the tires to slide.

Remember: Antilock brakes help avoid only the braking skid.

Driving on Wet Roads

Rain and wet roads can reduce vehicle traction and affect your ability to stop and accelerate. Always drive slower in these types of driving conditions and avoid driving through large puddles and deep-standing or flowing water.

⚠ Warning

Wet brakes can cause crashes. They might not work as well in a quick stop and could cause pulling to one side. You could lose control of the vehicle.

After driving through a large puddle of water or a car/vehicle wash, lightly apply the brake pedal until the brakes work normally.

Flowing or rushing water creates strong forces. Driving through flowing water could cause the vehicle to be carried away. If this happens, you and other vehicle occupants could drown. Do not ignore police warnings and be very cautious about trying to drive through flowing water.

Hydroplaning

Hydroplaning is dangerous. Water can build up under the vehicle's tires so they actually ride on the water. This can happen if the road is wet enough and you are going fast enough. When the vehicle is hydroplaning, it has little or no contact with the road.

There is no hard and fast rule about hydroplaning. The best advice is to slow down when the road is wet.

Other Rainy Weather Tips

Besides slowing down, other wet weather driving tips include:

- Allow extra following distance.
- Pass with caution.
- Keep windshield wiping equipment in good shape.
- Keep the windshield washer fluid reservoir filled.
- Have good tires with proper tread depth. See *Tires* ⇨ *235*.
- Turn off cruise control.

Hill and Mountain Roads

Driving on steep hills or through mountains is different than driving on flat or rolling terrain. Tips include:

- Keep the vehicle serviced and in good shape.
- Check all fluid levels and brakes, tires, cooling system, and transmission.
- Shift to a lower gear when going down steep or long hills.

⚠ Warning

Using the brakes to slow the vehicle on a long downhill slope can cause brake overheating, can reduce brake performance, and could result in a loss of braking. Shift the transmission to a lower gear to let the engine assist the brakes on a steep downhill slope.

⚠ Warning

Coasting downhill in N (Neutral) or with the ignition off is dangerous. This can cause overheating of the brakes and loss of steering assist. Always have the engine running and the vehicle in gear.

- Drive at speeds that keep the vehicle in its own lane. Do not swing wide or cross the center line.
- Be alert on top of hills; something could be in your lane (e.g., stalled car, accident).
- Pay attention to special road signs (e.g., falling rocks area, winding roads, long grades, passing or no-passing zones) and take appropriate action.

Winter Driving

Driving on Snow or Ice

Snow or ice between the tires and the road creates less traction or grip, so drive carefully. Wet ice can occur at about 0 °C (32 °F) when freezing rain begins to fall. Avoid driving on wet ice or in freezing rain until roads can be treated.

For Slippery Road Driving:

- Accelerate gently. Accelerating too quickly causes the wheels to spin and makes the surface under the tires slick.
- Turn on Traction Control. See *Traction Control/Electronic Stability Control* ⇨ *180*.
- The Antilock Brake System (ABS) improves vehicle stability during hard stops, but the brakes should be applied sooner than when on dry pavement. See *Antilock Brake System (ABS)* ⇨ *178*.

- Allow greater following distance and watch for slippery spots. Icy patches can occur on otherwise clear roads in shaded areas. The surface of a curve or an overpass can remain icy when the surrounding roads are clear. Avoid sudden steering maneuvers and braking while on ice.
- Turn off cruise control.

Blizzard Conditions

Stop the vehicle in a safe place and signal for help. Stay with the vehicle unless there is help nearby.
If possible, use Roadside Assistance. See *Roadside Assistance Program* ⇨ *296*. To get help and keep everyone in the vehicle safe:

- Turn on the hazard warning flashers.
- Tie a red cloth to an outside mirror.

⚠ Warning

Snow can trap engine exhaust under the vehicle. This may cause exhaust gases to get inside. Engine exhaust contains carbon monoxide (CO), which cannot be seen or smelled. It can cause unconsciousness and even death.

If the vehicle is stuck in snow:

- Clear snow from the base of the vehicle, especially any blocking the exhaust pipe.
- Open a window about 5 cm (2 in) on the vehicle side that is away from the wind, to bring in fresh air.
- Fully open the air outlets on or under the instrument panel.
- Adjust the climate control system to circulate the air inside the vehicle and set

(Continued)

Warning (Continued)

the fan speed to the highest setting. See “Climate Control Systems.”

For more information about CO, see *Engine Exhaust* ⇨ *174*.

To save fuel, run the engine for short periods to warm the vehicle and then shut the engine off and partially close the window. Moving about to keep warm also helps.

If it takes time for help to arrive, when running the engine, push the accelerator pedal slightly so the engine runs faster than the idle speed. This keeps the battery charged to restart the vehicle and to signal for help with the headlamps. Do this as little as possible, to save fuel.

If the Vehicle Is Stuck

Slowly and cautiously spin the wheels to free the vehicle when stuck in sand, mud, ice, or snow.

If stuck too severely for the traction system to free the vehicle, turn the traction system off and use the rocking method. See *Traction Control/Electronic Stability Control* ⇨ *180*.

⚠ Warning

If the vehicle's tires spin at high speed, they can explode, and you or others could be injured. The vehicle can overheat, causing an engine compartment fire or other damage. Spin the wheels as little as possible and avoid going above 56 km/h (35 mph).

Rocking the Vehicle to Get it Out

Turn the steering wheel left and right to clear the area around the front wheels. Turn off any traction system. Shift back and forth between R (Reverse) and a low forward gear, spinning the wheels as little as possible. To prevent transmission wear, wait until the wheels stop spinning before shifting gears. Release the accelerator pedal while shifting, and press lightly on the accelerator pedal when the transmission is in gear. Slowly spinning the wheels in the forward and reverse directions causes a rocking motion that could free the vehicle. If that does not get the vehicle out after a few tries, it might need to be towed out. If the vehicle does need to be towed out, see *Towing the Vehicle* ⇨ *263*.

Vehicle Load Limits

It is very important to know how much weight the vehicle can carry. This weight is called the vehicle capacity weight and includes the weight of all occupants, cargo, and all nonfactory-installed options. Two labels on the vehicle may show how much weight it may properly carry, the Tire and Loading Information label and the Certification/Tire label.

⚠ Warning

Do not load the vehicle any heavier than the Gross Vehicle Weight Rating (GVWR), or either the maximum front or rear Gross Axle Weight Rating (GAWR). This can cause systems to break and change the way the vehicle handles. This could cause loss of control and a crash. Overloading can also reduce stopping distance, damage the tires, and shorten the life of the vehicle.

Tire and Loading Information Label

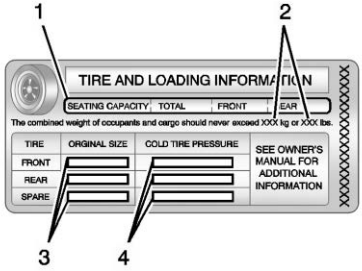

Example Label

A vehicle-specific Tire and Loading Information label is attached to the center pillar (B-pillar). The Tire and Loading Information label shows the number of occupant seating positions (1), and the maximum vehicle capacity weight (2) in kilograms and pounds.

The Tire and Loading Information label also shows the size of the original equipment tires (3) and the recommended cold tire inflation pressures (4). For more information on tires and inflation see *Tires* ⇨ *235* and *Tire Pressure* ⇨ *242*.

There is also important loading information on the vehicle Certification/Tire label. It may show the Gross Vehicle Weight Rating (GVWR) and the Gross Axle Weight Rating (GAWR) for the front and rear axle. See “Certification/Tire Label” later in this section.

“Steps for Determining Correct Load Limit–

1. Locate the statement "The combined weight of occupants and cargo should never exceed XXX kg or XXX lbs." on your vehicle’s placard.
2. Determine the combined weight of the driver and passengers that will be riding in your vehicle.
3. Subtract the combined weight of the driver and passengers from XXX kg or XXX lbs.
4. The resulting figure equals the available amount of cargo and luggage load capacity. For example, if the "XXX" amount equals 1400 lbs. and there will be five 150 lb passengers in your vehicle, the amount of available cargo and luggage load capacity is 650 lbs. (1400-750 (5 x 150) = 650 lbs.)
5. Determine the combined weight of luggage and cargo being loaded on the vehicle. That weight may not safely exceed the available cargo and luggage load capacity calculated in Step 4.
6. If your vehicle will be towing a trailer, load from your trailer will be transferred to

your vehicle. Consult this manual to determine how this reduces the available cargo and luggage load capacity of your vehicle.”

This vehicle is neither designed nor intended to tow a trailer.

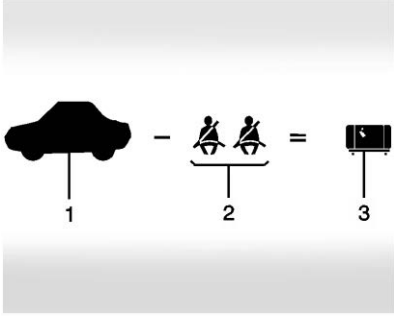

Example 1

1. Vehicle Capacity Weight for Example 1 = 453 kg (1,000 lbs).
2. Subtract Occupant Weight @ 68 kg (150 lbs) × 2 = 136 kg (300 lbs).
3. Available Occupant and Cargo Weight = 317 kg (700 lbs).

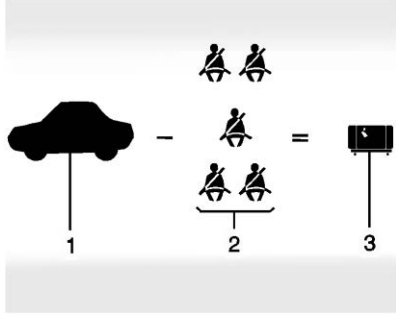

Example 2

1. Vehicle Capacity Weight for Example 2 = 453 kg (1,000 lbs).
2. Subtract Occupant Weight @ 68 kg (150 lbs) × 5 = 340 kg (750 lbs).
3. Available Cargo Weight = 113 kg (250 lbs).

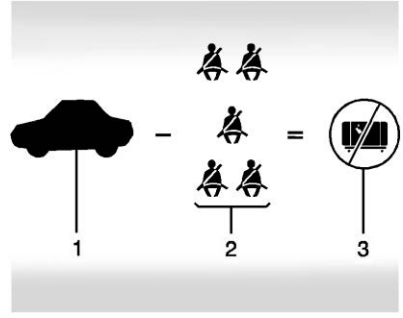

Example 3

1. Vehicle Capacity Weight for Example 3 = 453 kg (1,000 lbs).
2. Subtract Occupant Weight @ 91 kg (200 lbs) × 5 = 453 kg (1,000 lbs).
3. Available Cargo Weight = 0 kg (0 lbs).

Refer to your vehicle's Tire and Loading Information label for specific information about your vehicle's capacity weight and seating positions. The combined

weight of the driver, passengers, and cargo should never exceed your vehicle's capacity weight.

Certification/Tire Label

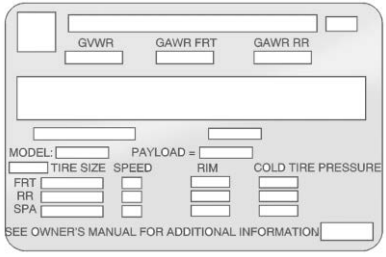

Label Example

A vehicle-specific Certification/Tire label is attached to the center pillar (B-pillar).

The label may show the size of the vehicle's original tires and the inflation pressures needed to obtain the gross weight capacity of the vehicle. The label shows the gross weight capacity of the vehicle. This is called the Gross Vehicle Weight Rating (GVWR). The GVWR includes the weight of the vehicle, all occupants, fuel, and cargo.

The Certification/Tire label may also show the maximum weights for the front and rear axles, called the Gross Axle Weight Rating (GAWR). To find out the actual loads on the front and rear axles, weigh the vehicle at a weigh station. Your dealer can help with this. Be sure to spread the load equally on both sides of the centerline.

Caution

Overloading the vehicle may cause damage. Repairs would not be covered by the vehicle warranty. Do not overload the vehicle.

⚠ Warning

Things you put inside the vehicle can strike and injure people in a sudden stop or turn, or in a crash.

- Put things in the cargo area of the vehicle. Try to spread the weight evenly.
- Never stack heavier things, like suitcases, inside the vehicle so that some of them are above the tops of the seats.
- Do not leave an unsecured child restraint in the vehicle.
- When you carry something inside the vehicle, secure it whenever you can.
- Do not leave a seat folded down unless you need to.

Starting and Operating

New Vehicle Break-In

Caution

The vehicle does not need an elaborate break-in. But it will perform better in the long run if you follow these guidelines:

- Do not drive at any one constant speed, fast or slow, for the first 805 km (500 mi). Do not make full-throttle starts. Avoid downshifting to brake or slow the vehicle.
- Avoid making hard stops for the first 322 km (200 mi) or so. During this time the new brake linings are not yet broken in. Hard stops with new linings can mean premature wear and earlier replacement. Follow this

(Continued)

Caution (Continued)

breaking-in guideline every time you get new brake linings.

Following break-in, engine speed and load can be gradually increased.

Ignition Positions

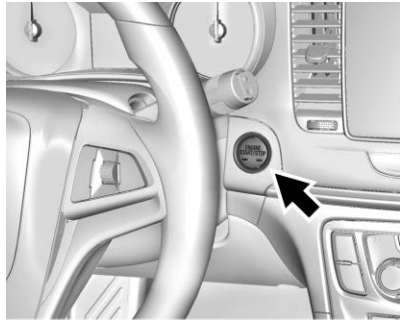

The vehicle has an electronic keyless ignition with pushbutton start. The RKE transmitter must be in the vehicle for the system to operate.

If the vehicle is not working, the vehicle may be near a strong antenna signal causing interference to the Keyless Access System. See *Remote Keyless Entry (RKE) System Operation* ⇨ *27*.

To shift out of P (Park), the ignition must be on or in ACC/ACCESSORY, and the brake must be applied.

Stopping the Engine/LOCK/OFF (No Indicator Lights) : When the vehicle is stopped, press ENGINE START/STOP once to turn the engine off. If the vehicle is in P (Park), the ignition will turn off, and Retained Accessory Power (RAP) will remain active. See *Retained Accessory Power (RAP)* ⇨ *171*.

If the vehicle is not in P (Park), the ignition will return to ACC/ACCESSORY and the Driver Information Center (DIC) will display the message SHIFT TO PARK.

When the vehicle is shifted into P (Park), the ignition system turn off.

Do not turn the ignition off when the vehicle is moving. This will cause a loss of power assist in the brake and steering systems and disable the airbags.

If the vehicle must be shut off in an emergency:

1. Brake using a firm steady pressure. Do not pump the brakes repeatedly. This may deplete power assist, requiring increased brake pedal force.
2. Shift the vehicle to N (Neutral). This can be done while the vehicle is moving. After shifting to N (Neutral), firmly apply the brakes and steer the vehicle to a safe location.
3. Come to a complete stop, shift to P (Park), and turn the ignition off. On vehicles with an automatic transmission, the shift lever must be in P (Park) to turn the ignition switch off.
4. Set the parking brake. See *Parking Brake* ⇨ *179*.

⚠ Warning

Turning off the vehicle while moving may cause loss of power assist in the brake and steering systems and disable the airbags. While driving, only shut the vehicle off in an emergency.

If the vehicle cannot be pulled over, and must be shut off while driving, press and hold ENGINE START/STOP for longer than two seconds, or press twice in five seconds.

ACC/ACCESSORY (Amber Indicator Light) : This mode allows you to use some electrical accessories when the engine is off. With the ignition off, pressing ENGINE START/STOP one time without the brake pedal applied will place the ignition system in ACC/ACCESSORY.

The ignition will switch from ACC/ACCESSORY to OFF after five minutes to prevent battery rundown.

ON/RUN/START (Green Indicator Light) : This mode is for driving and starting. With the ignition off, and the brake pedal applied, pressing ENGINE START/STOP once will place the ignition system in ON/RUN/START.

Once engine cranking begins, release ENGINE START/STOP. Engine cranking will continue until the engine starts. See *Starting the Engine* ⇨ *168*.

The engine will then remain in ON/RUN.

Service Mode

This power mode is available for service and diagnostics, and to verify the proper operation of the

malfunction indicator lamp as may be required for emission inspection purposes.

With the vehicle off, and the brake pedal not applied, pressing and holding ENGINE START/STOP for more than five seconds will place the vehicle in Service Mode.

The instruments and audio system will operate as they do in ON/RUN, but the vehicle will not be able to be driven. The engine will not start in Service Mode.

Press ENGINE START/STOP again to turn the vehicle off.

Starting the Engine

Move the shift lever to P (Park) or N (Neutral). To restart the vehicle when it is already moving, use N (Neutral) only.

Caution

Do not try to shift to P (Park) if the vehicle is moving. If you do, you could damage the transmission. Shift to P (Park) only when the vehicle is stopped.

Caution

If you add electrical parts or accessories, you could change the way the engine operates. Any resulting damage would not be covered by the vehicle warranty. See *Add-On Electrical Equipment* ⇨ *197*.

Starting Procedure

1. With the Keyless Access System, the RKE transmitter must be in the vehicle. Press ENGINE START/STOP with the brake pedal applied. When the engine begins cranking, let go of the button.

   The idle speed will go down as the engine gets warm. Do not race the engine immediately after starting it.

   If the RKE transmitter is not in the vehicle, if there is interference, or if the RKE transmitter battery is low, the Driver Information Center (DIC) will display a message. See *Driver Information Center (DIC) (Uplevel)* ⇨ *125* or *Driver Information Center (DIC) (Base Level)* ⇨ *123* and *Remote Keyless Entry (RKE) System Operation* ⇨ *27*.

Caution

Cranking the engine for long periods of time, by returning the ignition to the START position immediately after cranking has ended, can overheat and damage the cranking motor, and drain the battery. Wait at least 15 seconds between each try, to let the cranking motor cool down.

2. If the engine does not start after five to 10 seconds, especially in very cold weather (below −18 °C or 0 °F), it could be flooded with too much gasoline. Try pushing the accelerator pedal all the way to the floor and holding it there as you hold ENGINE START/STOP, for up to a maximum of 15 seconds. Wait at least 15 seconds between each try, to allow the cranking motor to cool down.

   When the engine starts, let go of the button and the accelerator. If the vehicle starts briefly but then stops again, follow the same steps. This clears the extra gasoline from the engine.

   Do not race the engine immediately after starting it. Operate the engine and transmission gently until the oil warms up and lubricates all moving parts.

Stop/Start System

⚠ Warning

The automatic engine Stop/Start feature causes the engine to shut off while the vehicle is still on. Do not exit the vehicle before shifting to P (Park). The vehicle may restart and move unexpectedly. Always shift to P (Park), and then turn the ignition off before exiting the vehicle.

If equipped, the stop/start system helps to save fuel and reduce the exhaust emissions.

Auto Engine Stop/Start

When the brakes are applied and the vehicle is at a complete stop, the engine may turn off. When stopped, the tachometer displays AUTO STOP. See *Tachometer* ⇨ *112*. When the brake pedal is released or the accelerator pedal pushed, the engine will restart.

Auto Stop may be deactivated if:

- A minimum vehicle speed is not reached.
- The engine or transmission is not at the required operating temperature.
- The shift lever is in any gear other than D (Drive).
- The battery charge is low.
- The interior comfort level has not reached the required level for the climate control system or defog settings. See *Dual Automatic Climate Control System* ⇨ *148*.
- The Auto Stop time is greater than two minutes.

Engine Heater

Vehicles with the 1.4L engine may have an engine heater. The engine heater can help in cold weather conditions at or below −18 °C (0 °F) for easier starting and better fuel economy during engine warm-up. Plug in the heater at least four hours before starting the vehicle. An internal thermostat in the plug end of the cord will prevent engine heater operation at temperatures above −18 °C (0 °F).

⚠ Warning

Do not plug in the engine block heater while the vehicle is parked in a garage or under a carport. Property damage or personal injury may result. Always park the vehicle in a clear open area away from buildings or structures.

To Use the Engine Heater

1. Turn off the engine.

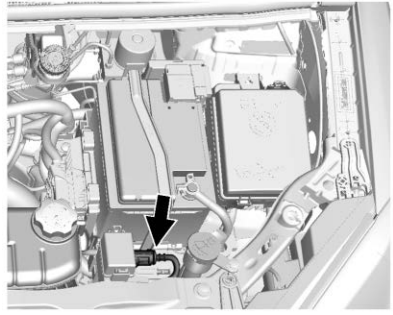

2. Open the hood and unwrap the electrical cord. The cord is located in the driver side of the engine compartment, near the battery. It is shipped from the factory with a tie holding it in place. Use care in removing the tie so that the cord is not damaged.

   Check the heater cord for damage. If it is damaged, do not use it. See your dealer for a replacement. Inspect the cord for damage yearly.

3. Plug it into a normal, grounded 110-volt AC outlet.

⚠ Warning

Improper use of the heater cord or an extension cord can damage the cord and may result in overheating and fire.

- Plug the cord into a three-prong electrical utility receptacle that is protected by a ground fault detection function. An ungrounded outlet could cause an electric shock.
- Use a weatherproof, heavy-duty, 15 amp-rated extension cord if needed. Failure to use the recommended extension cord in good operating condition, or using a damaged heater or extension cord, could make

(Continued)

Warning (Continued)

it overheat and cause a fire, property damage, electric shock, and injury.

- Do not operate the vehicle with the heater cord permanently attached to the vehicle. Possible heater cord and thermostat damage could occur.
- While in use, do not let the heater cord touch vehicle parts or sharp edges. Never close the hood on the heater cord.
- Before starting the vehicle, unplug the cord, reattach the cover to the plug, and securely fasten the cord. Keep the cord away from any moving parts.

4. Before starting the engine, be sure to unplug and store the cord as it was before to keep it away from moving engine parts. If you do not it could be damaged.

The length of time the heater should remain plugged in depends on several factors. Ask a dealer in the area where you will be parking the vehicle for the best advice on this.

Retained Accessory Power (RAP)

Some vehicle accessories may be used after the ignition is turned off.

The power windows and sunroof, if equipped, will continue to work for up to 10 minutes or until any door is opened.

The infotainment system will continue to work for 10 minutes, until the driver door is opened, or until the ignition is turned on or placed in ACC/ACCESSORY.

Shifting Into Park

1. Hold the brake pedal down and set the parking brake. See *Parking Brake* ⇨ *179*.
2. Move the shift lever into P (Park) by pressing the button on the shift lever and pushing the lever all the way toward the front of the vehicle.
3. Turn the ignition off.

Leaving the Vehicle with the Engine Running (Automatic Transmission)

⚠ Warning

It can be dangerous to leave the vehicle with the engine running. It could overheat and catch fire.

It is dangerous to get out of the vehicle if the shift lever is not fully in P (Park) with the parking brake firmly set. The vehicle can roll.

Do not leave the vehicle when the engine is running. If you have left the engine running, the vehicle can move suddenly. You or others could be injured. To be sure the vehicle will not move, even when

(Continued)

Warning (Continued)

you are on fairly level ground, always set the parking brake and move the shift lever to P (Park). See *Shifting Into Park* ⇨ *171*.

If you have to leave the vehicle with the engine running, be sure the vehicle is in P (Park) and the parking brake is firmly set before you leave it. After you have moved the shift lever into P (Park), hold the brake pedal down. Then see if you can move the shift lever away from P (Park) without first pushing the button on the shift lever. If you can, it means that the shift lever was not fully locked into P (Park).

Torque Lock (Automatic Transmission)

If you are parking on a hill and you do not shift the transmission into P (Park) properly, the weight of the vehicle may put too much force on the parking pawl in the transmission. You may find it difficult to pull the shift lever out of P (Park). This is called "torque lock." To prevent torque lock, set the parking brake and then shift into P (Park) properly before you leave the driver seat. To find out how, see "Shifting Into Park" previously in this section.

When you are ready to drive, move the shift lever out of P (Park) before you release the parking brake.

If torque lock does occur, you may need to have another vehicle push yours a little uphill to take some of the pressure from the parking pawl in the transmission, so you can pull the shift lever out of P (Park).

Shifting out of Park

This vehicle is equipped with a shift lock control. The shift lock control is designed to prevent movement of the shift lever out of P (Park) unless the ignition is on and the brake pedal is applied.

The shift lock control is always functional except in the case of an uncharged or low voltage (less than 9-volt) battery.

If the vehicle has an uncharged battery or a battery with low voltage, try charging or jump starting the battery. See *Jump Starting - North America* ⇨ *261*.

To shift out of P (Park):

1. Apply the brake pedal.
2. Turn the ignition on.
3. Press the shift lever button.
4. Move the shift lever to the desired position.

If still unable to shift out of P (Park):

1. Fully release the shift lever button.
2. Hold the brake pedal down and press the shift lever button again.
3. Move the shift lever to the desired position.

If the shift lever still cannot be moved from P (Park), see "Shift Lock Manual Release" following.

Shift Lock Manual Release

The automatic transmission has an electric park lock. The ignition must be in the on and the brake pedal pressed so the shift lever can be moved from the P (Park) position. If the battery has lost power, the shift lever cannot be moved from P (Park) unless the shift lock manual release is disengaged manually.

To access the shift lock manual release:

1. Turn the ignition off.
2. Hold the brake pedal down. Apply the parking brake.

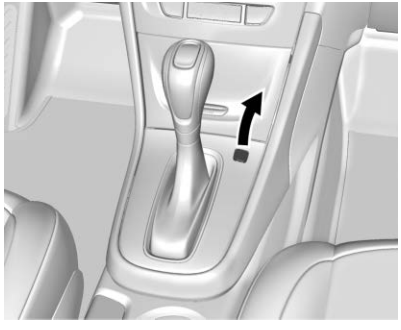

3. Remove the cover on the console.

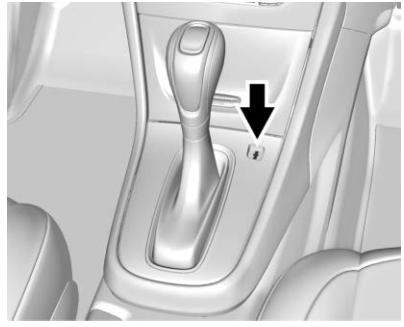

4. Insert and push the key into the slot.
5. Move the shift lever out of P (Park). If P (Park) is selected again after the key is removed from the slot, the shift lever will be locked again.
6. Remove the key from the slot.
7. Close the cover.
8. Have the cause of the problem fixed by your dealer.

Parking over Things That Burn

⚠ Warning

Things that can burn could touch hot exhaust parts under the vehicle and ignite. Do not park over papers, leaves, dry grass, or other things that can burn.

Extended Parking

It is best not to park with the vehicle running. If the vehicle is left running, be sure it will not move and there is adequate ventilation.
See *Shifting Into Park* ⇨ *171* and *Engine Exhaust* ⇨ *174*.

If the vehicle is left parked and running with the Remote Keyless Entry (RKE) transmitter outside the vehicle, it will turn off after one hour.

If the vehicle is left parked and running with the RKE transmitter inside the vehicle, it will turn off after two hours.

The vehicle could turn off sooner if it is parked on a hill, due to lack of available fuel.

The timer will reset if the vehicle is taken out of P (Park) while it is running.

Engine Exhaust

⚠ Warning

Engine exhaust contains carbon monoxide (CO), which cannot be seen or smelled. Exposure to CO can cause unconsciousness and even death.

Exhaust may enter the vehicle if:

- The vehicle idles in areas with poor ventilation (parking garages, tunnels, deep snow that may block underbody airflow or tail pipes).
- The exhaust smells or sounds strange or different.
- The exhaust system leaks due to corrosion or damage.
- The vehicle exhaust system has been modified, damaged, or improperly repaired.

(Continued)

Warning (Continued)

- There are holes or openings in the vehicle body from damage or aftermarket modifications that are not completely sealed.

If unusual fumes are detected or if it is suspected that exhaust is coming into the vehicle:

- Drive it only with the windows completely down.
- Have the vehicle repaired immediately.

Never park the vehicle with the engine running in an enclosed area such as a garage or a building that has no fresh air ventilation.

Running the Vehicle While Parked

It is better not to park with the engine running.

If the vehicle is left with the engine running, follow the proper steps to be sure the vehicle will not move. See *Shifting Into Park* ⇨ *171* and *Engine Exhaust* ⇨ *174*.

Automatic Transmission

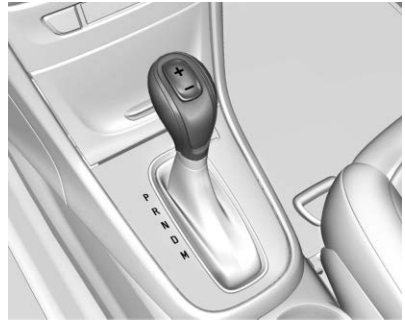

The selected gear is also shown in the instrument cluster.

P : This position locks the drive wheels. Use P (Park) when starting the engine because the vehicle cannot move easily.

⚠ Warning

It is dangerous to get out of the vehicle if the shift lever is not fully in P (Park) with the parking brake firmly set. The vehicle can roll.

Do not leave the vehicle when the engine is running. If you have left the engine running, the vehicle can move suddenly. You or others could be injured. To be sure the vehicle will not move, even when you are on fairly level ground, always set the parking brake and move the shift lever to P (Park). See *Shifting Into Park* ⇨ *171*.

Make sure the shift lever is fully in P (Park) before starting the engine. The vehicle has an automatic transmission shift lock control system. The regular brake must be fully applied first and then the shift lever button pressed before shifting from P (Park) when the ignition is on. If you cannot shift out of P (Park), ease pressure on the shift lever, then push the shift lever all

the way into P (Park) as you maintain brake application. Then press the shift lever button and move the shift lever into another gear. See *Shifting out of Park* ⇨ *172*.

R : Use this gear to back up.

Caution

Shifting to R (Reverse) while the vehicle is moving forward could damage the transmission. The repairs would not be covered by the vehicle warranty. Shift to R (Reverse) only after the vehicle is stopped.

To rock the vehicle back and forth to get out of snow, ice, or sand without damaging the transmission, see *If the Vehicle Is Stuck* ⇨ *162*.

N : In this position, the engine does not connect with the wheels. To restart the engine when the vehicle is already moving, use N (Neutral) only.

⚠ Warning

Shifting into a drive gear while the engine is running at high speed is dangerous. Unless your foot is firmly on the brake pedal, the vehicle could move very rapidly. You could lose control and hit people or objects. Do not shift into a drive gear while the engine is running at high speed.

Caution

Shifting out of P (Park) or N (Neutral) with the engine running at high speed may damage the transmission. The repairs would not be covered by the vehicle warranty. Be sure the engine is not running at high speed when shifting the vehicle.

Caution

A transmission hot message may display if the automatic transmission fluid is too hot. Driving under this condition can damage the vehicle. Stop and idle the engine to cool the automatic transmission fluid. This message clears when the transmission fluid has cooled sufficiently.

D : This position is for normal driving. If more power is needed for passing, press the accelerator pedal down.

M : This position allows shifting similar to a manual transmission. See *Manual Mode* ⇨ *177*.

Caution

If the vehicle does not shift gears, the transmission could be damaged. Have the vehicle serviced right away.

Automatic Transmission Adaptation Feature : While the vehicle is being driven and gear shifting takes place, the transmission will learn and adapt. This increases durability and maintains the best shift quality of the life of the vehicle.

During vehicle break-in (initial driving), it is normal to experience some shift bumps. Shift quality will improve with the normal gear shifting as the transmission learns and adapts.

Operating Modes

The transmission may operate in a lower gear than normal to improve vehicle performance. The engine speed may be higher and there may be an increase in noise during the following conditions:

- When climbing a grade.
- When driving downhill.
- When driving in hot temperatures or at high altitude.

Manual Mode

Driver Shift Control (DSC)

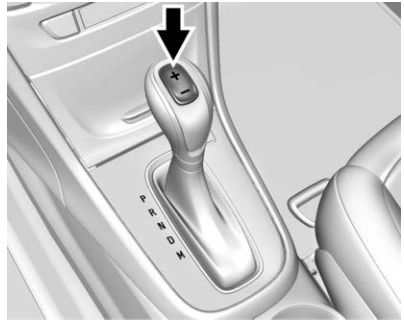

DSC allows you to shift an automatic transmission similar to a manual transmission. To use the DSC feature:

1. Move the shift lever from D (Drive) rearward to M (Manual Mode).

   While driving in manual mode, the transmission will remain in the driver selected gear. When coming to a stop in the manual position, the vehicle will automatically shift into 1 (First) gear.

2. Press the + (plus) end of the button on the top of the shift lever to upshift, or press the − (minus) end of the button to downshift.

The instrument cluster will change from the currently displayed message to the letter “M,” for Manual position, and a number indicating the requested gear.

While using the DSC feature, the transmission will have firmer shifting and sportier performance. This can be used for sport driving or when climbing hills to stay in gear longer or to downshift for more power or engine braking.

The transmission will only allow you to shift into gears appropriate for the vehicle speed and engine revolutions per minute (rpm):

- The transmission will not allow shifting to the next higher gear if the vehicle speed or engine rpm is too low.
- The transmission will not allow shifting to the next lower gear if the vehicle speed or engine rpm is too high.

Drive Systems

All-Wheel Drive

If equipped, this feature transfers engine power, as required, to all four wheels. It is fully automatic , and adjusts itself as needed for road conditions.

When using a compact spare tire on an All-Wheel Drive (AWD) vehicle, the system automatically detects the compact spare and disables AWD to protect the system. A Driver Information Center (DIC) message will display on the instrument cluster. See *Vehicle Messages* ⇨ *127*. To restore AWD operation and prevent excessive wear on the system, replace the compact spare with a full-size tire as soon as possible. See *Compact Spare Tire* ⇨ *260*.

AWD will be disabled and the message will display if there is excessive wheel spin. When the system cools down, AWD will be restored.

Brakes

Antilock Brake System (ABS)

This vehicle has an Antilock Brake System (ABS), an advanced electronic braking system that helps prevent a braking skid.

When the vehicle begins to drive away, ABS checks itself.
A momentary motor or clicking noise may be heard while this test is going on, and it may even be noticed that the brake pedal moves a little. This is normal.

If there is a problem with ABS, this warning light stays on. See *Antilock Brake System (ABS) Warning Light* ⇨ *119*.

If driving safely on a wet road and it becomes necessary to slam on the brakes and continue braking to avoid a sudden obstacle, a computer senses the wheels are slowing down. If one of the wheels is about to stop rolling, the computer will separately work the brakes at each wheel.

ABS can change the brake pressure to each wheel, as required, faster than any driver could. This can help you steer around the obstacle while braking hard.

As the brakes are applied, the computer keeps receiving updates on wheel speed and controls braking pressure accordingly.

Remember: ABS does not change the time needed to get a foot up to the brake pedal or always decrease stopping distance. If you get too close to the vehicle in front of you, there will not be enough time to apply the brakes if that vehicle suddenly slows or stops. Always leave enough room up ahead to stop, even with ABS.

Using ABS

Do not pump the brakes. Just hold the brake pedal down firmly and let ABS work. You may hear the ABS pump or motor operating and feel the brake pedal pulsate. This is normal.

Braking in Emergencies

ABS allows you to steer and brake at the same time. In many emergencies, steering can help more than even the very best braking.

Parking Brake

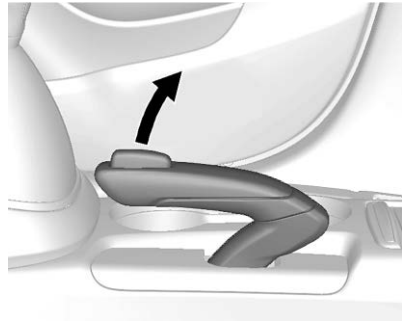

To set the parking brake, hold the brake pedal down and pull up on the parking brake lever. If the ignition is on, the brake system warning light will come on. See *Brake System Warning Light* ⇨ *118*.

To release the parking brake, hold the brake pedal down. Pull the parking brake lever up until you can press the release button. Hold the release button in as you move the brake lever all the way down.

Caution
Driving with the parking brake on can overheat the brake system and cause premature wear or damage to brake system parts. Make sure that the parking brake is fully released and the brake warning light is off before driving.

Brake Assist

The Brake Assist feature is designed to assist the driver in stopping or decreasing vehicle speed in emergency driving conditions. This feature uses the stability system hydraulic brake control module to supplement the power brake system under conditions where the driver has quickly and forcefully applied the brake pedal in an attempt to quickly stop or slow down the vehicle. The stability system hydraulic brake control module increases brake pressure at each corner of the vehicle until the ABS activates. Minor brake pedal pulsation or pedal movement during this time is normal and the driver should continue to apply the brake pedal as the driving situation dictates. The Brake Assist feature will automatically disengage when the brake pedal is released or brake pedal pressure is quickly decreased.

Ride Control Systems

Traction Control/ Electronic Stability Control

System Operation

The vehicle has a Traction Control System (TCS) and StabiliTrak, an electronic stability control system. These systems help limit wheel slip and assist the driver in maintaining control, especially on slippery road conditions.

TCS activates if it senses that any of the drive wheels are spinning or beginning to lose traction. When this happens, TCS applies the brakes to the spinning wheels and reduces engine power to limit wheel spin.

StabiliTrak activates when the vehicle senses a difference between the intended path and the direction the vehicle is actually traveling. StabiliTrak selectively applies braking pressure to any one of the vehicle wheel brakes to assist the driver in keeping the vehicle on the intended path.

If cruise control is being used and traction control or StabiliTrak begins to limit wheel spin, cruise control will disengage. Cruise control may be turned back on when road conditions allow.

Both systems come on automatically when the vehicle is started and begins to move. The systems may be heard or felt while they are operating or while performing diagnostic checks. This is normal and does not mean there is a problem with the vehicle.

It is recommended to leave both systems on for normal driving conditions, but it may be necessary to turn TCS off if the vehicle gets stuck in sand, mud, ice, or snow. See *If the Vehicle Is Stuck* ⇨ *162* and “Turning the Systems Off and On” later in this section.

The indicator light for both systems is in the instrument cluster. This light will:

- Flash when TCS is limiting wheel spin.
- Flash when StabiliTrak is activated.
- Turn on and stay on when either system is not working.

If either system fails to turn on or to activate, a message displays in the Driver Information Center (DIC), and comes on and stays on to indicate that the system is inactive and is not assisting the driver in maintaining control. The vehicle is safe to drive, but driving should be adjusted accordingly.

If comes on and stays on:

1. Stop the vehicle.
2. Turn the engine off and wait 15 seconds.
3. Start the engine.

Drive the vehicle. If comes on and stays on, the vehicle may need more time to diagnose the problem. If the condition persists, see your dealer.

Turning the Systems Off and On

Caution
Do not repeatedly brake or accelerate heavily when TCS is off. The vehicle driveline could be damaged.

To turn off only TCS, press and release . The Traction Off light displays in the instrument cluster. The appropriate message may display in the DIC.

To turn TCS on again, press and release . The Traction Off light displayed in the instrument cluster will turn off.

If TCS is limiting wheel spin when is pressed, the system will not turn off until the wheels stop spinning.

To turn off both TCS and StabiliTrak, press and hold until the Traction Off light and StabiliTrak Off light come on and stay on in the instrument cluster. The appropriate message may display in the DIC.

To turn TCS and StabiliTrak on again, press and release OFF. The Traction Off light TC and StabiliTrak Off light OFF in the instrument cluster turn off.

Adding accessories can affect the vehicle performance. See *Accessories and Modifications* ⇨ *200*.

Cruise Control

The cruise control lets the vehicle maintain a speed of about 40 km/h (25 mph) or more without keeping your foot on the accelerator. Cruise control does not work at speeds below 40 km/h (25 mph).

⚠ Warning

Cruise control can be dangerous where you cannot drive safely at a steady speed. Do not use cruise control on winding roads or in heavy traffic.

Cruise control can be dangerous on slippery roads. On such roads, fast changes in tire traction can cause excessive wheel slip, and you could lose control. Do not use cruise control on slippery roads.

The vehicle has a Traction Control System (TCS) or StabiliTrak system that begins to limit wheel spin while using cruise control and the cruise control will automatically disengage. See *Traction Control/Electronic Stability Control* ⇨ *180*. If a collision alert occurs when cruise control is activated, cruise control is disengaged. See *Forward Collision Alert (FCA) System* ⇨ *188*. When road conditions allow you to safely use it again, cruise control can be turned back on.

If the brakes are applied, cruise control disengages.

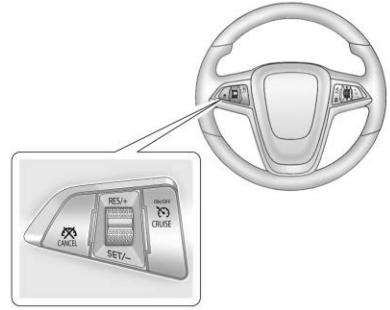

ON/OFF CRUISE **:** Press to turn the cruise control system on or off. A white indicator comes in the instrument cluster when cruise is turned on.

RES/+ : If there is a set speed in memory, move the thumbwheel up briefly to resume to that speed or hold upward to accelerate. If cruise control is already active, use to increase vehicle speed.

SET/− : Move the thumbwheel down briefly to set the speed and activate cruise control. If cruise control is already active, use to decrease speed.

CANCEL **:** Press to disengage cruise control without erasing the set speed from memory.

Setting Cruise Control

If ON/OFF CRUISE is on when not in use, SET/− or RES/+ could get bumped and go into cruise when not desired. Keep CRUISE off when cruise control is not being used.

To set a speed:

1. Press ON/OFF CRUISE to turn cruise control on.
2. Get up to the speed desired.
3. Move the thumbwheel down toward SET/− and release it.
4. Remove your foot from the accelerator.

The cruise control indicator on the instrument cluster turns green after cruise control has been set to the desired speed. See *Instrument Cluster* ⇨ *109*.

Resuming a Set Speed

If the cruise control is set at a desired speed and then the brakes are applied or CANCEL is pressed, the cruise control is disengaged without erasing the set speed from memory. Once the vehicle speed is about 40 km/h (25 mph) or greater, move the thumbwheel up toward RES/+ briefly. The vehicle returns to the previously set speed.

Increasing Speed While Using Cruise Control

If the cruise control system is already activated:

- Move the thumbwheel up toward RES/+ and hold it until the desired speed is reached, then release it.
- To increase vehicle speed in small increments, move the thumbwheel up toward RES/+ briefly. For each press, the vehicle goes about 1.6 km/h (1 mph) faster.

The speedometer reading can be displayed in either English or metric units.
See *Driver Information Center (DIC) (Uplevel)* ⇨ *125* or *Driver Information Center (DIC) (Base Level)* ⇨ *123*.
The increment value used depends on the units displayed.

Reducing Speed While Using Cruise Control

If the cruise control system is already activated:

- Move the thumbwheel toward SET/− and hold until the desired lower speed is reached, then release it.
- To decrease the vehicle speed in small increments, move the thumbwheel toward SET/− briefly. For each press, the vehicle goes about 1.6 km/h (1 mph) slower.

The speedometer reading can be displayed in either English or metric units.
See *Driver Information Center (DIC) (Uplevel)* ⇨ *125* or *Driver Information Center (DIC) (Base Level)* ⇨ *123*.
The increment value used depends on the units displayed.

Passing Another Vehicle While Using Cruise Control

Use the accelerator pedal to increase the vehicle speed. When you take your foot off the pedal, the vehicle slows down to the previous set cruise control speed. While pressing the accelerator pedal or shortly following the release to override cruise control, briefly moving the thumbwheel toward SET/− will result in cruise set to the current vehicle speed.

Using Cruise Control on Hills

How well cruise control works on hills depends on the vehicle speed, load, and the steepness of the hills. When going up steep hills, you might have to step on the accelerator pedal to maintain the vehicle speed. When going downhill, you might have to brake or shift to a lower gear to keep your speed down. If the brake pedal is applied, cruise control will disengage.

Ending Cruise Control

There are four ways to end cruise control:

- To disengage cruise control, step lightly on the brake pedal.
- Press CANCEL.
- Shift the transmission to N (Neutral).
- To turn off cruise control, press CRUISE.

Erasing Speed Memory

The cruise control set speed is erased from memory if CRUISE is pressed or if the vehicle is turned off.

Driver Assistance Systems

Rear Vision Camera (RVC)

The RVC can assist the driver when backing up by displaying a view of the area behind the vehicle.

⚠ Warning

The camera(s) do not display children, pedestrians, bicyclists, crossing traffic, animals, or any other object outside of the cameras' field of view, below the bumper, or under the vehicle. Shown distances may be different from actual distances. Do not drive or park the vehicle using only these camera(s). Always check behind and around the vehicle before driving. Failure to use proper care may result in injury, death, or vehicle damage.

An image appears on the infotainment display when the vehicle is shifted into R (Reverse). The previous screen displays when the vehicle is shifted out of R (Reverse) after a short delay. To return to the previous screen sooner, press any button on the infotainment display, shift into P (Park), or reach a vehicle speed of approximately 12 km/h (8 mph).

Symbols and Guidelines

The RVC may have a guideline overlay that can help the driver align the vehicle when backing into a parking spot. Select the guidance lines button on the camera screen to enable or disable the guidance lines, or see *Vehicle Personalization* ⇨ *128*.

The RVC system may have a feature that lets the driver view parking assist symbols on the infotainment screen while using the RVC. The Rear Parking Assist (RPA) system must not be disabled to use the caution symbols. The error message Rear Parking Assist Symbols Unavailable may display if RPA has been disabled and the symbols have been turned on. See *Parking Assist* ⇨ *186*.

Rear Cross Traffic Alert (RCTA)

On vehicles with the RCTA, a warning triangle with a left or right pointing arrow may appear on the infotainment display to warn of traffic coming from the left or the right. Three beeps will sound from the speaker on that side. This system detects objects coming from up to 20 m (65 ft) from the left or right side behind the vehicle. The RCTA system will not work properly if ice, snow, mud, or anything else builds up on the rear bumper sensors.

Rear Vision Camera Location

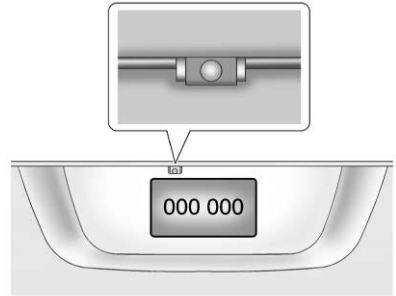

The camera is above the license plate.

The area displayed by the camera is limited.

It does not display objects that are close to either corner or under the bumper and can vary depending on vehicle orientation or road conditions. Displayed images may be closer or farther than they appear.

The following illustrations show the field of view that the camera provides.

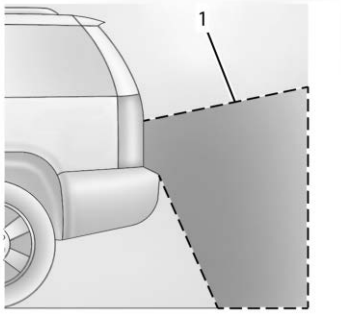

1. View displayed by the camera.

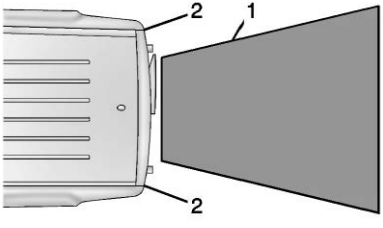

1. View displayed by the camera.
2. Corner of the rear bumper.

When the System Does Not Seem To Work Properly

The RVC may not work properly or display a clear image if:

- It is dark.
- The sun or the beam of headlamps is shining directly into the camera lens.
- Ice, snow, mud, or anything else builds up on the camera lens. Clean the lens, rinse it with water, and wipe it with a soft cloth.
- The back of the vehicle is in an accident, the position and mounting angle of the camera can change or the camera can be affected. Be sure to have the camera and its position and mounting angle checked at your dealer.
- There are extreme temperature changes.

Parking Assist

If equipped, the Front and Rear Parking Assist (FRPA) system, assists the driver with parking and avoiding objects. FRPA operates at speeds less than 8 km/h (5 mph). The sensors on the front and rear bumper detect objects up to 1.2 m (4 ft) in front of the vehicle, 2.5 m (8 ft) behind the vehicle, and at least 25 cm (10 in) off the ground and below liftgate level. This detection distance may be less during warmer or humid weather.

⚠ Warning

The Parking Assist system does not detect children, pedestrians, bicyclists, animals, or objects located below the bumper or that are too close or too far from the vehicle. It is not available at speeds greater than 8 km/h (5 mph). To prevent injury, death, or vehicle damage, even with Parking Assist, always check the

(Continued)

Warning (Continued)

area around the vehicle and check all mirrors before moving forward or backing.

How the System Works

When the vehicle is shifted into R (Reverse) the front and rear sensors are automatically turned on. After the vehicle is shifted out of R (Reverse), the rear sensors are turned off and the front sensors stay on until the vehicle is above a speed of 11 km/h (7 mph). For the front park assist system to be active again without shifting into R (Reverse), the park assist button on the center stack, forward of the shift lever, must be pressed. See "Turning the System On and Off" later in this section.

FRPA operates only at speeds less than 8 km/h (5 mph).

When the vehicle is in N (Neutral), the system may be active. If the vehicle is in a car wash, the sensors may detect objects in the car wash. See "Turning the System On and Off" later in this section to turn the system off.

High-toned beeps from the front speakers are for objects detected near the front bumper. Low-toned beeps from the rear speakers are for objects detected near the rear bumper. The interval between the beeps becomes shorter as the vehicle gets closer to the obstacle. When the distance is less than 30 cm (12 in) the beeping is a continuous tone for five seconds.

Objects Detected by Both the Front and Rear Sensors

In general, if objects are detected at the same time near both the front and rear bumpers while backing up, the beeps only sound to indicate that objects are close to the rear bumper.

However, if an object comes within 0.3 m (1 ft) of the front bumper while the vehicle is backing up and at the same time there is another object further than 0.3 m (1 ft) from the rear bumper, then higher-pitched beeps only sound to indicate the front object.

Turning the System On and Off

The FRPA system can be turned on and off by pressing P on the center stack, forward of the shift lever.

The indicator light in the button comes on when the system is turned on.

When the system is off, the indicator light in the button is off or PARK ASSIST OFF briefly displays on the Driver Information Center (DIC).

FRPA defaults to the on setting each time the vehicle is started.

When the System Does Not Seem to Work Properly

The following messages may be displayed on the DIC:

SERVICE PARKING ASSIST : If this message occurs, take the vehicle to your dealer to repair the system.

PARK ASSIST OFF : If the FRPA system does not activate due to a temporary condition, the message displays on the DIC. This can occur under the following conditions:

- The driver has disabled the system.
- The sensors are not clean. Keep the vehicle's bumpers free of mud, dirt, snow, ice and slush. For cleaning instructions, see *Exterior Care* ⇨ *267*.
- The park assist sensors are covered by frost or ice. Frost or ice can form around and behind the sensors and may not always be seen; this can occur after washing the vehicle in cold weather. The message may not clear until the frost or ice has melted.
- An object was hanging out of the liftgate during the last drive cycle. Once the object is removed, FRPA will return to normal operation.
- An object or cover is attached to the front of the vehicle.
- The bumper is damaged. Take the vehicle to your dealer to repair the system.
- Other conditions, such as vibrations from a jackhammer or the compression of air brakes on a very large truck, are affecting system performance.

Forward Collision Alert (FCA) System

If equipped, the FCA system may help to avoid or reduce the harm caused by front-end crashes. When approaching a vehicle ahead too quickly, FCA provides a red flashing alert on the windshield and rapidly beeps.

FCA detects vehicles within a distance of approximately 60 m (197 ft) and operates at speeds above 40 km/h (25 mph).

⚠ Warning

FCA is a warning system and does not apply the brakes. When approaching a slower-moving or stopped vehicle ahead too rapidly, or when following a vehicle too closely, FCA may not provide a warning with enough time to help avoid a crash. It also may not provide any warning at all. FCA does not warn of pedestrians, animals, signs, guardrails, bridges, construction barrels, or other objects. Be ready to take action and apply the brakes. See *Defensive Driving* ⇨ *156*.

FCA can be disabled with either the FCA steering wheel control or, if equipped, through vehicle personalization. See “Collision/ Detection Systems” under *Vehicle Personalization* ⇨ *128*.

Detecting the Vehicle Ahead

FCA warnings will not occur unless the FCA system detects a vehicle ahead. When a vehicle is detected, the vehicle ahead indicator will display green. Vehicles may not be detected on curves, highway exit ramps, or hills, due to poor visibility; or if a vehicle ahead is partially blocked by pedestrians or other objects. FCA will not detect another vehicle ahead until it is completely in the driving lane.

⚠ Warning

FCA does not provide a warning to help avoid a crash, unless it detects a vehicle. FCA may not detect a vehicle ahead if the FCA sensor is blocked by dirt, snow,

(Continued)

Warning (Continued)

or ice, or if the windshield is damaged. It may also not detect a vehicle on winding or hilly roads, or in conditions that can limit visibility such as fog, rain, or snow, or if the headlamps or windshield are not cleaned or in proper condition. Keep the windshield, headlamps, and FCA sensors clean and in good repair.

Collision Alert

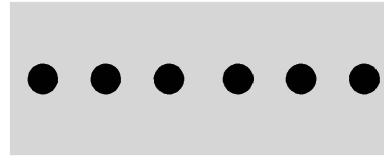

When your vehicle approaches another detected vehicle too rapidly, the FCA display will flash on the windshield. Also, eight rapid high-pitched beeps will sound from the front. When this Collision Alert occurs, the brake system may prepare for driver braking to occur more rapidly which can cause a brief, mild deceleration. Continue to apply the brake pedal as needed. Cruise control may be disengaged when the Collision Alert occurs.

Selecting the Alert Timing

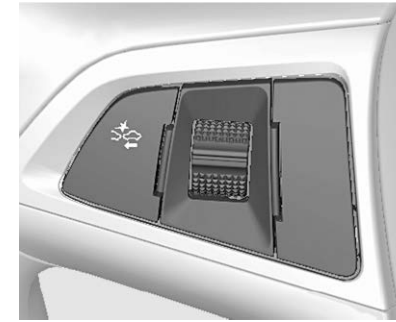

The Collision Alert control is on the steering wheel. Press to set the FCA timing to far, medium, or near, or on some vehicles, Off. The first button press shows the current setting on the DIC. Additional button presses will change this setting. The chosen setting will remain until it is

changed. The timing of alerts will vary based on vehicle speed. The faster the vehicle speed, the farther away the alert will occur. Consider traffic and weather conditions when selecting the alert timing. The range of selectable alert timings may not be appropriate for all drivers and driving conditions.

Unnecessary Alerts

FCA may provide unnecessary alerts to turning vehicles, vehicles in other lanes, objects that are not vehicles, or shadows. These alerts are normal operation and the vehicle does not need service.

Cleaning the System

If the FCA system does not seem to operate properly, this may correct the issue:

- Clean the outside of the windshield in front of the rearview mirror.
- Clean the entire front of the vehicle.
- Clean the headlamps.

Side Blind Zone Alert (SBZA)

If equipped, the SBZA system is a lane-changing aid that assists drivers with avoiding crashes that occur with moving vehicles in the side blind zone (or spot) areas. The SBZA warning display will light up in the corresponding outside side mirror and will flash if the turn signal is on.

⚠ Warning

SBZA does not alert the driver to vehicles rapidly approaching outside of the side blind zones, pedestrians, bicyclists, or animals. It may not provide alerts when changing lanes under all driving conditions. Failure to use proper care when changing lanes may result in injury, death, or vehicle damage. Before making a lane change, always check mirrors, glance over your shoulder, and use the turn signals.

SBZA Detection Zones

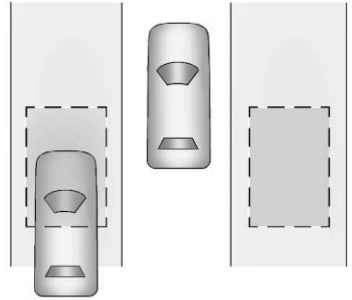

The SBZA sensor covers a zone of approximately one lane over from both sides of the vehicle, or 3.5 m (11 ft). The height of the zone is approximately between 0.5 m (1.5 ft) and 2 m (6 ft) off the ground. This zone starts at approximately the middle of the vehicle and goes back 5 m (16 ft).

How the System Works

The SBZA symbol lights up in the side mirrors when the system detects a moving vehicle in the next lane over that is in the side blind zone. This indicates it may be

unsafe to change lanes. Before making a lane change, check the SBZA display, check mirrors, glance over your shoulder, and use the turn signals.

Left Side Mirror Display

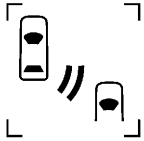

Right Side Mirror Display

When the vehicle is started, both outside mirror SBZA displays will briefly come on to indicate the system is operating. When the vehicle is in a forward gear, the left- or right-side mirror display will light up if a moving vehicle is detected in that blind zone. If the turn signal is activated in the same direction of a detected vehicle, this display will flash as an extra warning not to change lanes.

SBZA can be disabled through vehicle personalization. See “Collision/Detection Systems” under *Vehicle Personalization* ⇨ *128*.

If SBZA is disabled by the driver, the SBZA mirror displays will not light up.

When the System Does Not Seem to Work Properly

SBZA displays may not come on when passing a vehicle quickly or for a stopped vehicle. SBZA may alert to objects attached to the vehicle, such as a bicycle, or object extending out to either side of the vehicle. This is normal system operation; the vehicle does not need service.

SBZA may not always alert the driver to vehicles in the side blind zone, especially in wet conditions. The system does not need to be serviced. The system may light up due to guardrails, signs, trees, shrubs, and other non-moving objects. This is normal system operation; the vehicle does not need service.

SBZA may not operate when the SBZA sensors in the left or right corners of the rear bumper are covered with mud, dirt, snow, ice, or slush, or in heavy rainstorms. For cleaning instructions, see "Washing the Vehicle" under *Exterior Care* ⇨ *267*. If the DIC still displays the system unavailable message after cleaning both sides of the vehicle toward the rear corners of the vehicle, see your dealer.

If the SBZA displays do not light up when vehicles are in the blind zone and the system is clean, the system may need service. Take the vehicle to your dealer.

When SBZA is disabled for any reason other than the driver turning it off, the Side Blind Zone Alert On option will not be available on the personalization menu.

Radio Frequency Information

See *Radio Frequency Statement* ⇨ *302*.

Lane Departure Warning (LDW)

If equipped, LDW may help avoid crashes due to unintentional lane departures. It may provide an alert if the vehicle is crossing a lane without using a turn signal in that direction. LDW uses a camera sensor to detect the lane markings at speeds of 56 km/h (35 mph) or greater.

⚠ Warning

The LDW system does not steer the vehicle. The LDW system may not:

- Provide enough time to avoid a crash.
- Detect lane markings under poor weather or visibility conditions. This can occur if the windshield or headlamps are blocked by dirt, snow, or ice; if they are

(Continued)

Warning (Continued)

not in proper condition; or if the sun shines directly into the camera.

- Detect road edges.
- Detect lanes on winding or hilly roads.

If LDW only detects lane markings on one side of the road, it will only warn you when departing the lane on the side where it has detected a lane marking. Always keep your attention on the road and maintain proper vehicle position within the lane, or vehicle damage, injury, or death could occur. Always keep the windshield, headlamps, and camera sensors clean and in good repair. Do not use LDW in bad weather conditions.

How the System Works

The LDW camera sensor is on the windshield ahead of the rearview mirror.

To turn LDW on and off, press on the center stack, forward of the shift lever. The control indicator will light when LDW is on.

When LDW is on, is green if LDW is available to warn of a lane departure. If the vehicle crosses a detected lane marking without using the turn signal in that direction, changes to amber and flashes. Additionally, there will be three beeps on the right or left, depending on the lane departure direction.

When the System Does Not Seem To Work Properly

The system may not detect lanes as well when there are:

- Close vehicles ahead.
- Sudden lighting changes, such as when driving through tunnels.
- Banked roads.

If the LDW system is not functioning properly when lane markings are clearly visible, cleaning the windshield may help.

LDW alerts may occur due to tar marks, shadows, cracks in the road, temporary or construction lane markings, or other road imperfections. This is normal system operation; the vehicle does not need service. Turn LDW off if these conditions continue.

Fuel

GM recommends the use of TOP TIER detergent gasoline to keep the engine cleaner and reduce engine deposits. See www.toptiergas.com for a list of TOP TIER detergent gasoline marketers and applicable countries.

Do not use any fuel labeled E85 or FlexFuel. Do not use gasoline with ethanol levels greater than 15% by volume.

Use regular unleaded gasoline meeting ASTM specification D4814 with a posted octane rating of 87 or higher. Do not use gasoline with a posted octane rating of less than 87, as this may cause engine knock and will lower fuel economy.

Prohibited Fuels

Caution

Do not use fuels with any of the following conditions; doing so may damage the vehicle and void its warranty:

- For vehicles which are not FlexFuel, fuel labeled greater than 15% ethanol by volume, such as mid-level ethanol blends (16 – 50% ethanol), E85, or FlexFuel.
- Fuel with any amount of methanol, methylal, and aniline. These fuels can corrode metal fuel system parts or damage plastic and rubber parts.

(Continued)

Caution (Continued)

- Fuel containing metals such as methylcyclopentadienyl manganese tricarbonyl (MMT), which can damage the emissions control system and spark plugs.
- Fuel with a posted octane rating of less than the recommended fuel. Using this fuel will lower fuel economy and performance, and may decrease the life of the emissions catalyst.

California Fuel Requirements

If the vehicle is certified to meet California Emissions Standards, it is designed to operate on fuels that meet California specifications. See the underhood emission control label. If this fuel is not available in states adopting California Emissions Standards, the vehicle will operate satisfactorily on fuels meeting federal specifications, but emission control system performance may be affected. The malfunction indicator lamp could turn on and the vehicle may not pass a smog-check test. See *Malfunction Indicator Lamp (Check Engine Light)* ⇨ *116*. If this occurs, return to your authorized dealer for diagnosis. If it is determined that the condition is caused by the type of fuel used, repairs may not be covered by the vehicle warranty.

Fuels in Foreign Countries

The U.S., Canada, and Mexico post fuel octane ratings in anti-knock index (AKI). For fuel not to use in a foreign country, see “Prohibited Fuels” in *Fuel* ⇨ *193*.

Fuel Additives

To keep fuel systems clean, TOP TIER detergent gasoline is recommended. See *Fuel* ⇨ *193*.

If TOP TIER detergent gasoline is not available, one bottle of GM Fuel System Treatment Cleaner added to the fuel tank at every engine oil change, can help. GM Fuel System Treatment Cleaner is the only gasoline additive recommended by General Motors. It is available at your dealer.

Filling the Tank

⚠ Warning

Fuel vapors and fuel fires burn violently and can cause injury or death.

- To help avoid injuries to you and others, read and follow all the instructions on the fuel pump island.
- Turn off the engine when refueling.
- Keep sparks, flames, and smoking materials away from fuel.

(Continued)

Warning (Continued)

- Do not leave the fuel pump unattended.
- Do not use a cell phone while refueling.
- Do not reenter the vehicle while pumping fuel.
- Keep children away from the fuel pump and never let children pump fuel.
- Fuel can spray out if the refueling nozzle is inserted too quickly. This spray can happen if the tank is nearly full, and is more likely in hot weather. Insert the refueling nozzle slowly and wait for any hiss noise to stop prior to beginning to flow fuel.

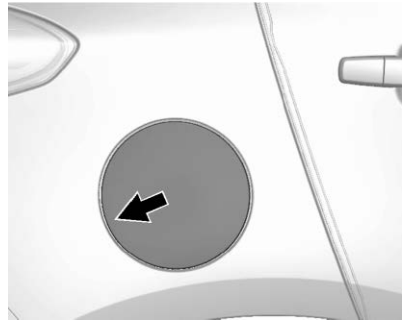

The fuel door is on the passenger rear side of the vehicle. If equipped, the fuel door is locked when the vehicle doors are locked. Press 🔓 on the RKE transmitter to unlock.

To open the fuel door, push and release the rearward center edge of the door.

The vehicle has a capless refueling system and does not have a fuel cap. The filling nozzle must be fully inserted and latched prior to starting fuel flow.

⚠ Warning

Overfilling the fuel tank by more than three clicks of a standard fill nozzle may cause:

- Vehicle performance issues, including engine stalling and damage to the fuel system.
- Fuel spills.
- Potential fuel fires.

Be careful not to spill fuel. Wait a few seconds after you have finished pumping before removing the nozzle. Clean fuel from painted surfaces as soon as possible. See *Exterior Care* ⇨ *267*.

⚠ Warning

If a fire starts while you are refueling, do not remove the nozzle. Shut off the flow of fuel by shutting off the pump or by notifying the station attendant. Leave the area immediately.

Filling the Tank with a Portable Gas Can

If the vehicle runs out of fuel and must be filled from a portable gas can:

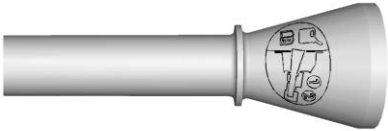

1. Locate the capless funnel adapter from the rear storage compartment under the load floor.
2. Insert and latch the funnel into the capless fuel system.

⚠ Warning

Attempting to refuel without using the funnel adapter may cause fuel spillage and damage the capless fuel system. This could cause a fire and you or others could be badly burned and the vehicle could be damaged.

3. Remove and clean the funnel adapter and return it to the storage location.

Filling a Portable Fuel Container

⚠ Warning

Filling a portable fuel container while it is in the vehicle can cause fuel vapors that can ignite either by static electricity or other means. You or others could be badly burned and the vehicle could be damaged. Always:

- Use approved fuel containers.
- Remove the container from the vehicle, trunk, or pickup bed before filling.
- Place the container on the ground.
- Place the nozzle inside the fill opening of the container before dispensing fuel, and

(Continued)

Warning (Continued)

keep it in contact with the fill opening until filling is complete.

- Fill the container no more than 95% full to allow for expansion.
- Do not smoke, light matches, or use lighters while pumping fuel.
- Avoid using cell phones or other electronic devices.

Trailer Towing

General Towing Information

The vehicle is neither designed nor intended to tow a trailer.

Conversions and Add-Ons

Add-On Electrical Equipment

⚠ Warning

The Data Link Connector (DLC) is used for vehicle service and Emission Inspection/Maintenance testing. See *Malfunction Indicator Lamp (Check Engine Light)* ⇨ *116*. A device connected to the DLC — such as an aftermarket fleet or driver-behavior tracking device — may interfere with vehicle systems. This could affect vehicle operation and cause a crash. Such devices may also access information stored in the vehicle's systems.

Caution

Some electrical equipment can damage the vehicle or cause components to not work and would not be covered by the vehicle warranty. Always check with your dealer before adding electrical equipment.

Add-on equipment can drain the vehicle's 12-volt battery, even if the vehicle is not operating.

The vehicle has an airbag system. Before attempting to add anything electrical to the vehicle, see *Servicing the Airbag-Equipped Vehicle* ⇨ *76* and *Adding Equipment to the Airbag-Equipped Vehicle* ⇨ *76*.

Vehicle Care

General Information
General Information 199
California Proposition 65 Warning 199
California Perchlorate Materials Requirements 200
Accessories and Modifications 200

Vehicle Checks
Doing Your Own Service Work 200
Hood 201
Engine Compartment Overview 203
Engine Oil 206
Engine Oil Life System 209
Automatic Transmission Fluid 210
Engine Air Cleaner/Filter 210
Cooling System 211
Engine Overheating 215
Washer Fluid 216
Brakes 217
Brake Fluid 218
Battery - North America 219
All-Wheel Drive 219
Starter Switch Check 220
Automatic Transmission Shift Lock Control Function Check 220
Park Brake and P (Park) Mechanism Check 220
Wiper Blade Replacement 221
Windshield Replacement 222
Gas Strut(s) 222

Headlamp Aiming
Headlamp Aiming 224

Bulb Replacement
Bulb Replacement 224
Halogen Bulbs 224
LED Lighting 224
Headlamps, Front Turn Signal and Parking Lamps 224
Taillamps, Turn Signal, Sidemarker, Stoplamps, and Back-Up Lamps 225
License Plate Lamp 227

Electrical System
Electrical System Overload 227
Fuses and Circuit Breakers 228
Engine Compartment Fuse Block 228
Instrument Panel Fuse Block 232
Rear Compartment Fuse Block 234

Wheels and Tires
Tires 235
All-Season Tires 236
Winter Tires 236
Summer Tires 237
Tire Sidewall Labeling 237
Tire Designations 239
Tire Terminology and Definitions 240
Tire Pressure 242
Tire Pressure Monitor System 244
Tire Pressure Monitor Operation 245
Tire Inspection 248
Tire Rotation 248
When It Is Time for New Tires 249
Buying New Tires 250
Different Size Tires and Wheels 251
Uniform Tire Quality Grading 252
Wheel Alignment and Tire Balance 253
Wheel Replacement 253
Tire Chains 254
If a Tire Goes Flat 254

Tire Changing 256
Compact Spare Tire 260

Jump Starting
Jump Starting - North America 261

Towing the Vehicle
Towing the Vehicle 263
Recreational Vehicle Towing 264

Appearance Care
Exterior Care 267
Interior Care 271
Floor Mats 274

General Information

For service and parts needs, visit your dealer. You will receive genuine GM parts and GM-trained and supported service people.

Genuine GM parts have one of these marks:

ACDelco

Genuine GM | Parts

GM Accessories

California Proposition 65 Warning

⚠ Warning

Most motor vehicles, including this one, as well as many of its service parts and fluids, contain and/or emit chemicals known to the State of California to cause cancer and birth defects or other reproductive harm. Engine exhaust, many parts and systems, many fluids, and some component wear by-products contain and/or emit these chemicals. For more information go to www.P65Warnings.ca.gov/passenger-vehicle.

See *Battery - North America* ⇨ *219* and *Jump Starting - North America* ⇨ *261* and the back cover.

California Perchlorate Materials Requirements

Certain types of automotive applications, such as airbag initiators, seat belt pretensioners, and lithium batteries contained in Remote Keyless Entry transmitters, may contain perchlorate materials. Special handling may be necessary. For additional information, see www.dtsc.ca.gov/hazardouswaste/perchlorate.

Accessories and Modifications

Adding non-dealer accessories or making modifications to the vehicle can affect vehicle performance and safety, including such things as airbags, braking, stability, ride and handling, emissions systems, aerodynamics, durability, and electronic systems like antilock brakes, traction control, and stability control. These accessories or modifications could even cause malfunction or damage not covered by the vehicle warranty.

Damage to suspension components caused by modifying vehicle height outside of factory settings will not be covered by the vehicle warranty.

Damage to vehicle components resulting from modifications or the installation or use of non-GM certified parts, including control module or software modifications, is not covered under the terms of the vehicle warranty and may affect remaining warranty coverage for affected parts.

GM Accessories are designed to complement and function with other systems on the vehicle. See your dealer to accessorize the vehicle using genuine GM Accessories installed by a dealer technician.

Also, see *Adding Equipment to the Airbag-Equipped Vehicle* ⇨ *76*.

Vehicle Checks

Doing Your Own Service Work

⚠ Warning

It can be dangerous to work on your vehicle if you do not have the proper knowledge, service manual, tools, or parts. Always follow owner's manual procedures and consult the service manual for your vehicle before doing any service work.

If doing some of your own service work, use the proper service manual. It tells you much more about how to service the vehicle than this manual can. To order the proper service manual, see *Service Publications Ordering Information* ⇨ *301*.

This vehicle has an airbag system. Before attempting to do your own service work, see *Servicing the Airbag-Equipped Vehicle* ⇨ *76*.

Keep a record with all parts receipts and list the mileage and the date of any service work performed. See *Maintenance Records* ⇨ *288*.

Caution
Even small amounts of contamination can cause damage to vehicle systems. Do not allow contaminants to contact the fluids, reservoir caps, or dipsticks.

Hood

To open the hood:

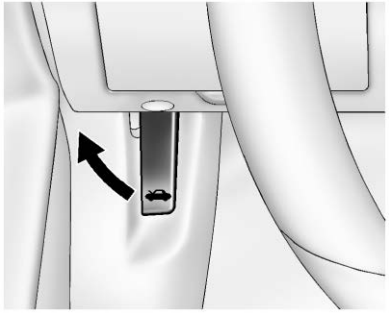

1. Pull the hood release handle inside the vehicle. It is located on the lower left side of the instrument panel.

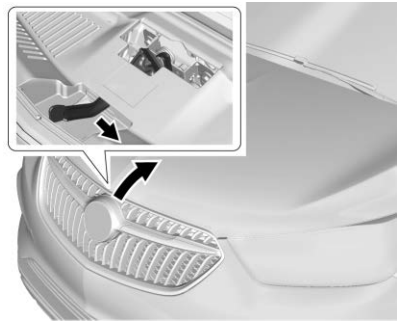

2. Go to the front of the vehicle and move the secondary hood release lever toward the right side of the vehicle.

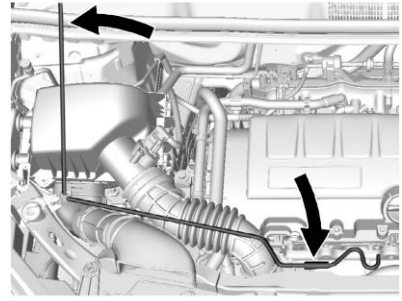

3. Lift the hood and release the hood prop from its retainer, above the radiator. Securely place the hood prop into the slot on the underside of the hood.

To close the hood:

1. Before closing the hood, be sure all filler caps are on properly. Then, lift the hood to relieve pressure on the hood prop. Remove the hood prop from the slot in the underside of the hood and return the prop to its retainer. The prop rod must click into place when returning it to the retainer to prevent hood damage.
2. Lower the hood 30 cm (12 in) above the vehicle and release it so it fully latches. Check to make sure the hood is closed and repeat the process if necessary.

Engine Compartment Overview

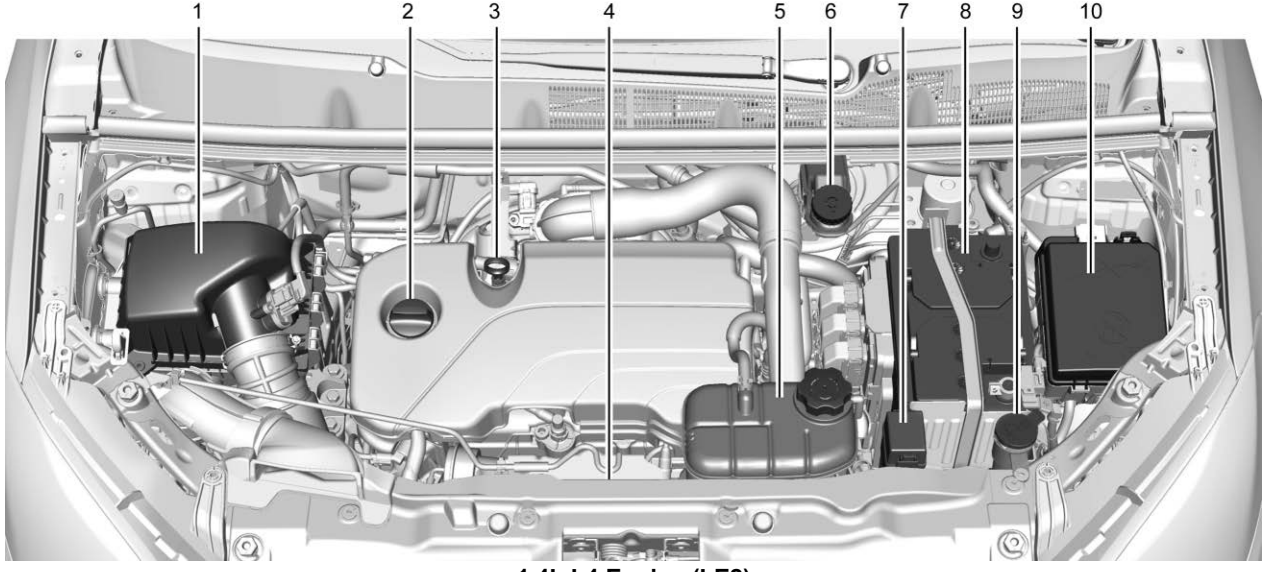

1.4L L4 Engine (LE2)

1. *Engine Air Cleaner/Filter* ⇨ *210*.
2. Engine Oil Fill Cap. See *Engine Oil* ⇨ *206*.
3. Engine Oil Dipstick. See *Engine Oil* ⇨ *206*.
4. Engine Cooling Fan (Out of View). See *Cooling System* ⇨ *211*.
5. Engine Coolant Surge Tank and Pressure Cap. See *Cooling System* ⇨ *211*.
6. Brake Fluid Reservoir. See *Brakes* ⇨ *217*.
7. Auxiliary Fuse Block. See *Engine Compartment Fuse Block* ⇨ *228*.
8. *Battery - North America* ⇨ *219*.
9. Windshield Washer Fluid Reservoir. See *Washer Fluid* ⇨ *216*.
10. *Engine Compartment Fuse Block* ⇨ *228*.

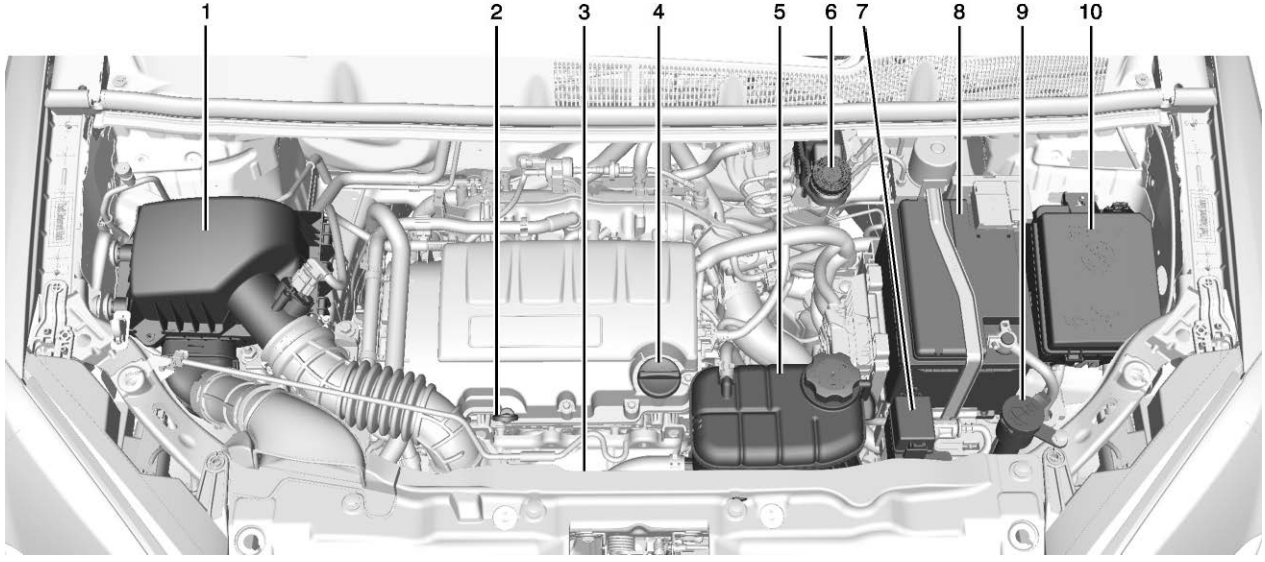

1.4L L4 Engine (LUV)

1. *Engine Air Cleaner/Filter* ⇨ *210*.
2. Engine Oil Dipstick. See *Engine Oil* ⇨ *206*.
3. Engine Cooling Fan (Out of View). See *Cooling System* ⇨ *211*.
4. Engine Oil Fill Cap. See *Engine Oil* ⇨ *206*.
5. Engine Coolant Surge Tank and Pressure Cap. See *Cooling System* ⇨ *211*.
6. Brake Fluid Reservoir. See *Brakes* ⇨ *217*.
7. Auxiliary Fuse Block. See *Engine Compartment Fuse Block* ⇨ *228*.
8. *Battery - North America* ⇨ *219*.
9. Windshield Washer Fluid Reservoir. See *Washer Fluid* ⇨ *216*.
10. *Engine Compartment Fuse Block* ⇨ *228*.

Engine Oil

To ensure proper engine performance and long life, careful attention must be paid to engine oil. Following these simple, but important steps will help protect your investment:

- Use engine oil approved to the proper specification and of the proper viscosity grade. See “Selecting the Right Engine Oil” in this section.
- Check the engine oil level regularly and maintain the proper oil level. See “Checking Engine Oil” and “When to Add Engine Oil” in this section.
- Change the engine oil at the appropriate time. See *Engine Oil Life System* ⇨ *209*.
- Always dispose of engine oil properly. See “What to Do with Used Oil” in this section.

Checking Engine Oil

Check the engine oil level regularly, every 650 km (400 mi), especially prior to a long trip. The engine oil dipstick handle is a loop. See *Engine Compartment Overview* ⇨ *203* for the location.

⚠ Warning

The engine oil dipstick handle may be hot; it could burn you. Use a towel or glove to touch the dipstick handle.

If a low oil Driver Information Center (DIC) message displays, check the oil level.

Follow these guidelines:

- To get an accurate reading, park the vehicle on level ground. Check the engine oil level after the engine has been off for at least two hours. Checking the engine oil level on steep grades or too soon after engine shutoff can result in incorrect readings. Accuracy improves when

checking a cold engine prior to starting. Remove the dipstick and check the level.

- If unable to wait two hours, the engine must be off for at least 15 minutes if the engine is warm, or at least 30 minutes if the engine is not warm. Pull out the dipstick, wipe it with a clean paper towel or cloth, then push it back in all the way. Remove it again, keeping the tip down, and check the level.

When to Add Engine Oil

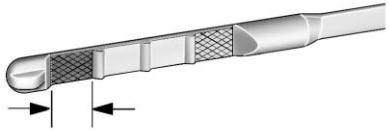

1.4L L4 Turbo Engine (LUV)

1.4L L4 Turbo Engine (LE2)

If the oil is below the cross-hatched area at the tip of the dipstick and the engine has been off for at least 15 minutes, add 1 L (1 qt) of the recommended oil and then recheck the level. See “Selecting the Right Engine Oil” later in this section for an explanation of what kind of oil to use. For engine oil crankcase capacity, see *Capacities and Specifications* ⇨ *290*.

Caution

Do not add too much oil. Oil levels above or below the acceptable operating range shown on the dipstick are harmful

(Continued)

Caution (Continued)

to the engine. If you find that you have an oil level above the operating range, i.e., the engine has so much oil that the oil level gets above the MAX mark, the engine could be damaged. You should drain out the excess oil or limit driving of the vehicle and seek a service professional to remove the excess amount of oil.

See *Engine Compartment Overview* ⇨ *203* for the location of the engine oil fill cap.

Add enough oil to put the level somewhere in the proper operating range between the MIN and MAX marks. Push the dipstick all the way back in when through.

Selecting the Right Engine Oil

Selecting the right engine oil depends on both the proper oil specification and viscosity grade. See *Recommended Fluids and Lubricants* ⇨ *286*.

Specification

Ask for and use full synthetic engine oils that meet the dexos1 specification.

Engine oils that have been approved by GM as meeting the dexos1 specification are marked with the dexos1 approved logo. See www.gmdexos.com.

Caution
Failure to use the recommended engine oil or equivalent can result in engine damage not covered by the vehicle warranty.

Viscosity Grade

For the LE2 1.4L turbo engine (VIN Code M), use:

- Dexos1 approved ACDelco Full Synthetic 0W20 engine oil.
- Dexos1 approved Mobil 1 Full Synthetic 0W20 engine oil.
- Or any other 0W20 engine oil meeting dexos1 second generation requirements.

For the LUV 1.4L turbo engine (VIN Code B), use SAE 5W-30 viscosity grade engine oil. Cold Temperature Operation: In an area of extreme cold, where the temperature falls below −29 °C (−20 °F), an SAE 0W-30 oil may be used. An oil of this viscosity grade will provide easier cold starting for the engine at extremely low temperatures.

When selecting an oil of the appropriate viscosity grade, it is recommended to select an oil of the correct specification. See “Specification” earlier in this section.

Engine Oil Additives/Engine Oil Flushes

Do not add anything to the oil. The recommended oils meeting the dexos1 specification are all that is needed for good performance and engine protection.

Engine oil system flushes are not recommended and could cause engine damage not covered by the vehicle warranty.

What to Do with Used Oil

Used engine oil contains certain elements that can be unhealthy for your skin and could even cause cancer. Do not let used oil stay on your skin for very long. Clean your skin and nails with soap and water, or a good hand cleaner. Wash or properly dispose of clothing or rags containing used engine oil. See the manufacturer's warnings about the use and disposal of oil products.

Used oil can be a threat to the environment. If you change your own oil, be sure to drain all the oil from the filter before disposal. Never

dispose of oil by putting it in the trash or pouring it on the ground, into sewers, or into streams or bodies of water. Recycle it by taking it to a place that collects used oil.

Engine Oil Life System

When to Change Engine Oil

This vehicle has a computer system that indicates when to change the engine oil and filter. This is based on a combination of factors which include engine revolutions, engine temperature, and miles driven. Based on driving conditions, the mileage at which an oil change is indicated can vary considerably. For the oil life system to work properly, the system must be reset every time the oil is changed.

When the system has calculated that oil life has been diminished, it indicates that an oil change is necessary. A CHANGE ENGINE OIL SOON DIC message comes on. Change the oil as soon as possible within the next 1 000 km (600 mi). It is possible that, if driving under the best conditions, the oil life system might indicate that an oil change is not necessary for up to a year. The engine oil and filter must be changed at least once a year and, at this time, the system must be reset. Your dealer has trained service people who will perform this work and reset the system. It is also important to check the oil regularly over the course of an oil drain interval and keep it at the proper level.

If the system is ever reset accidentally, the oil must be changed at 5 000 km (3,000 mi) since the last oil change. Remember to reset the oil life system whenever the oil is changed.

How to Reset the Engine Oil Life System

Reset the system whenever the engine oil is changed so that the system can calculate the next engine oil change. To reset the system:

1. Press the MENU button to show Remaining Oil Life on the display. This display shows an estimate of the oil's remaining useful life. If 99% is displayed, that means that 99% of the current oil life remains.
2. To reset the engine oil life system, press the SET/CLR button while the oil life display is active. After a few seconds, there will be a single chime and the oil life will be reset to 100%.

Be careful not to reset the oil life display accidentally at any time other than after the oil is changed. It cannot be reset accurately.

If the CHANGE ENGINE OIL SOON DIC message comes back on when the vehicle is started, the engine oil life system has not reset. Repeat the procedure.

Automatic Transmission Fluid

How to Check Automatic Transmission Fluid

It is not necessary to check the transmission fluid level.
A transmission fluid leak is the only reason for fluid loss. If a leak occurs, take the vehicle to your dealer and have it repaired as soon as possible.

There is a special procedure for checking and changing the transmission fluid. Because this procedure is difficult, you should have this done at your dealer.

Change the fluid at the intervals listed in *Maintenance Schedule* ⇨ *278*, and be sure to use the fluid listed in *Recommended Fluids and Lubricants* ⇨ *286*.

Engine Air Cleaner/Filter

The engine air cleaner/filter is in the engine compartment on the passenger side of the vehicle. See *Engine Compartment Overview* ⇨ *203*.

When to Inspect the Engine Air Cleaner/Filter

For intervals on changing and inspecting the engine air cleaner/filter, see *Maintenance Schedule* ⇨ *278*.

How to Inspect the Engine Air Cleaner/Filter

Do not start the engine or have the engine running with the engine air cleaner/filter housing open. Before removing the engine air cleaner/filter, make sure that the engine air cleaner/filter housing and nearby components are free of dirt and debris. Remove the engine air cleaner/filter. Lightly tap and shake the engine air cleaner/filter (away from the vehicle), to release loose dust and dirt. Inspect the engine air cleaner/filter for damage, and replace if damaged. Do not clean the engine air cleaner/filter with water or compressed air.

To inspect or replace the air cleaner/filter:

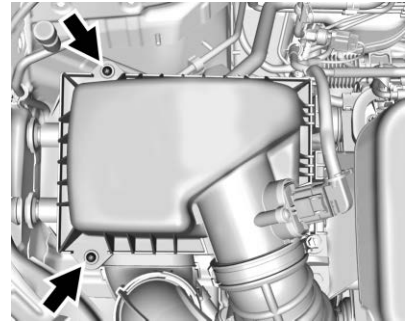

1.4L L4 Engine (LE2)

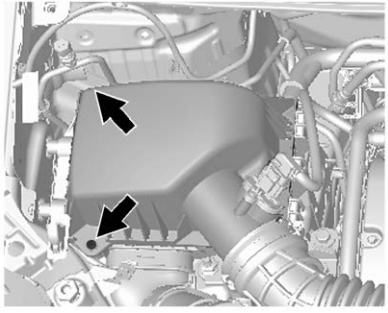

1.4L L4 Engine (LUV)

1. Remove the two screws, tilt the cover, and slide it out of the assembly.
2. Inspect or replace the engine air cleaner/filter.
3. Lower the cover, slide it into the assembly, then secure with the two screws.

See *Maintenance Schedule* ⇨ *278* for replacement intervals.

⚠ Warning

Operating the engine with the air cleaner/filter off can cause you or others to be burned. The air cleaner not only cleans the air; it helps to stop flames if the engine backfires. Use caution when working on the engine and do not drive with the air cleaner/filter off.

Caution

If the air cleaner/filter is off, dirt can easily get into the engine, which could damage it. Always have the air cleaner/filter in place when driving.

Cooling System

The cooling system allows the engine to maintain the correct working temperature.

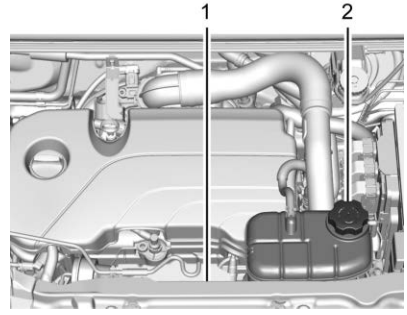

1.4L L4 Engine (LE2)

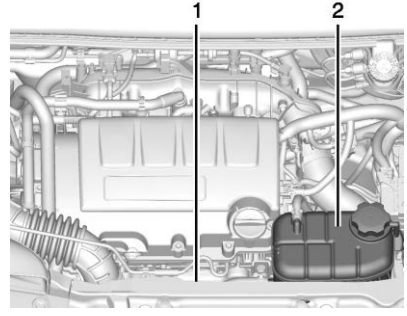

1.4L L4 Engine (LUV)

1. Engine Cooling Fan (Out of View)

2. Engine Coolant Surge Tank and Pressure Cap

⚠ Warning

An underhood electric fan can start up even when the engine is not running and can cause injury. Keep hands, clothing, and tools away from any underhood electric fan.

⚠ Warning

Do not touch heater or radiator hoses, or other engine parts. They can be very hot and can burn you. Do not run the engine if there is a leak; all coolant could leak out. That could cause an engine fire and can burn you. Fix any leak before driving the vehicle.

Engine Coolant

The cooling system in the vehicle is filled with DEX-COOL engine coolant. This coolant is designed to remain in the vehicle for 5 years or 240 000 km (150,000 mi), whichever occurs first.

The following explains the cooling system and how to check and add coolant when it is low. If there is a problem with engine overheating, see *Engine Overheating* ⇨ *215*.

What to Use

⚠ Warning

Plain water, or other liquids such as alcohol, can boil before the proper coolant mixture will. With plain water or the wrong mixture, the engine could get too hot but there would not be an overheat warning. The engine could catch fire and you or others could be burned.

Use a 50/50 mixture of clean drinkable water and DEX-COOL coolant. This mixture:

- Gives freezing protection down to −37 °C (−34 °F), outside temperature.
- Gives boiling protection up to 129 °C (265 °F), engine temperature.
- Protects against rust and corrosion.
- Will not damage aluminum parts.
- Helps keep the proper engine temperature.

Caution

Do not use anything other than a mix of DEX-COOL coolant that meets GM Standard GMW3420 and clean, drinkable water. Anything else can cause damage to the engine cooling system and the vehicle, which would not be covered by the vehicle warranty.

Never dispose of engine coolant by putting it in the trash, pouring it on the ground, or into sewers, streams, or bodies of water. Have the coolant changed by an authorized service center, familiar with legal requirements regarding used coolant disposal. This will help protect the environment and your health.

Checking Coolant

The vehicle must be on a level surface when checking the coolant level.

It is normal to see coolant moving in the upper coolant hose return line when the engine is running.

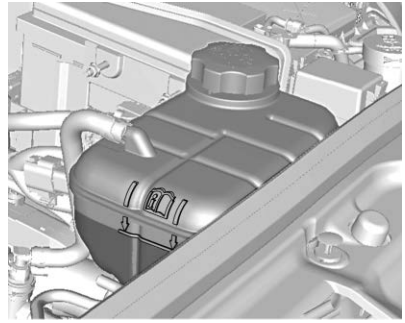

1.4L L4 Engine (LUV) Shown, 1.4L L4 Engine (LE2) Similar

Check to see if coolant is visible in the coolant surge tank. If the coolant inside the coolant surge tank is boiling, do not do anything else until it cools down.

If coolant is visible but the coolant level is not at or above the mark pointed to, add a 50/50 mixture of clean drinkable water and DEX-COOL coolant.

Be sure the cooling system is cool before this is done.

If no coolant is visible in the coolant surge tank, add coolant as follows:

How to Add Coolant to the Coolant Surge Tank

⚠ Warning

Steam and scalding liquids from a hot cooling system are under pressure. Turning the pressure cap, even a little, can cause them to come out at high speed and you could be burned. Never turn the cap when the cooling system, including the pressure cap, is hot. Wait for the cooling system and pressure cap to cool.

⚠ Warning

Plain water, or other liquids such as alcohol, can boil before the proper coolant mixture will. With plain water or the wrong mixture, the engine could get too hot but there would not be an overheat warning. The engine could catch fire and you or others could be burned.

⚠ Warning

Spilling coolant on hot engine parts can burn you. Coolant contains ethylene glycol and it will burn if the engine parts are hot enough.

Caution

Failure to follow the specific coolant fill procedure could cause the engine to overheat and could cause system damage. If coolant is not visible in the surge tank, contact your dealer.

If no problem is found, check to see if coolant is visible in the coolant surge tank. If coolant is visible but the coolant level is not at the indicated level mark, add a 50/50 mixture of clean, drinkable water and DEX-COOL coolant at the coolant surge tank, but be sure the cooling system, including the coolant surge tank pressure cap, is cool before you do it.

1. Remove the coolant surge tank pressure cap when the cooling system, including the coolant surge tank pressure cap and upper radiator hose, is no longer hot.

   Turn the pressure cap slowly counterclockwise about one-quarter of a turn. If you hear a hiss, wait for that to stop. This will allow any pressure still left to be vented out the discharge hose.

2. Keep turning the pressure cap slowly and remove it.

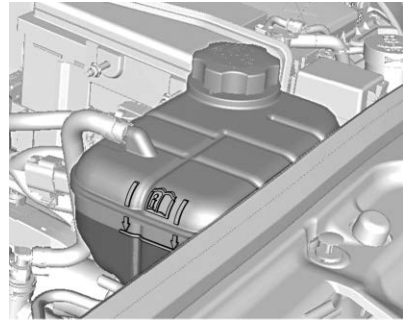

4. Fill the coolant surge tank with the proper mixture to the indicated level mark.

5. With the coolant surge tank pressure cap off, start the engine and let it run until you can feel the upper radiator hose getting hot. Watch out for the engine cooling fan.

   By this time, the coolant level inside the coolant surge tank may be lower. If the level is lower, add more of the proper mixture to the coolant surge tank until the level reaches the indicated level mark.

6. Replace the pressure cap tightly.
7. Verify coolant level after the engine is shut off and the coolant is cold. If necessary, repeat coolant fill procedure Steps 1–6.

   If the coolant still is not at the proper level when the system cools down again, see your dealer.

Caution

If the pressure cap is not tightly installed, coolant loss and engine damage may occur. Be sure the cap is properly and tightly secured.

Engine Overheating

The vehicle has an engine coolant temperature gauge to warn of the engine overheating. See *Engine Coolant Temperature Gauge* ⇨ *113*.

If the decision is made not to lift the hood when this warning appears, get service help right away. See *Roadside Assistance Program* ⇨ *296*.

If the decision is made to lift the hood, make sure the vehicle is parked on a level surface.

Then check to see if the engine cooling fan is running. If the engine is overheating, the fan should be running. If it is not, do not continue to run the engine. Have the vehicle serviced.

Caution

Do not run the engine if there is a leak in the engine cooling system. This can cause a loss of all coolant and can damage the system and vehicle. Have any leaks fixed right away.

If Steam Is Coming from the Engine Compartment

⚠ Warning

Steam and scalding liquids from a hot cooling system are under pressure. Turning the pressure cap, even a little, can cause them to come out at high speed and you could be burned. Never turn the cap when the cooling system, including the pressure cap, is hot. Wait for the cooling system and pressure cap to cool.

If No Steam Is Coming from the Engine Compartment

If an engine overheat warning is displayed but no steam can be seen or heard, the problem may not be too serious. Sometimes the engine can get a little too hot when the vehicle:

- Climbs a long hill on a hot day
- Stops after high-speed driving
- Idles for long periods in traffic

If the overheat warning is displayed with no sign of steam:

1. Turn the air conditioning off.
2. Turn the heater on to the highest temperature and to the highest fan speed. Open the windows as necessary.
3. When it is safe to do so, pull off the road, shift to P (Park) or N (Neutral), and let the engine idle.

If the engine coolant temperature gauge is no longer in the overheat zone, the vehicle can be driven. Continue to drive the vehicle slowly for about 10 minutes. Keep a safe vehicle distance from the vehicle in front. If the warning does not come back on, continue to drive normally and have the cooling system checked for proper fill and function.

If the warning continues, pull over, stop, and park the vehicle right away.

If there is no sign of steam, idle the engine for three minutes while parked. If the warning is still displayed, turn off the engine until it cools down.

Washer Fluid

What to Use

When the vehicle needs windshield washer fluid, be sure to read the manufacturer's instructions before use. If operating the vehicle in an area where the temperature may fall below freezing, use a fluid that has sufficient protection against freezing.

Adding Washer Fluid

Open the cap with the washer symbol on it. Add washer fluid until the tank is full. See *Engine Compartment Overview* ⇨ *203* for reservoir location.

Caution

- Do not use washer fluid that contains any type of water repellent coating. This can cause the wiper blades to chatter or skip.
- Do not use engine coolant (antifreeze) in the windshield washer. It can damage the windshield washer system and paint.
- Do not mix water with ready-to-use washer fluid. Water can cause the solution to freeze and damage the washer fluid tank and other parts of the washer system.

(Continued)

Caution (Continued)

- When using concentrated washer fluid, follow the manufacturer instructions for adding water.
- Fill the washer fluid tank only three-quarters full when it is very cold. This allows for fluid expansion if freezing occurs, which could damage the tank if it is completely full.

Brakes

Disc brake pads have built-in wear indicators that make a high-pitched warning sound when the brake pads are worn and new pads are needed. The sound can come and go or can be heard all the time when the vehicle is moving, except when applying the brake pedal firmly.

⚠ Warning

The brake wear warning sound means that soon the brakes will not work well. That could lead to a crash. When the brake wear warning sound is heard, have the vehicle serviced.

Caution

Continuing to drive with worn-out brake pads could result in costly brake repair.

Some driving conditions or climates can cause a brake squeal when the brakes are first applied or lightly applied. This does not mean something is wrong with the brakes.

Properly torqued wheel nuts are necessary to help prevent brake pulsation. When tires are rotated, inspect brake pads for wear and evenly tighten wheel nuts in the proper sequence to torque specifications. See *Capacities and Specifications* ⇨ *290*.

Brake pads should be replaced as complete sets.

Brake Pedal Travel

See your dealer if the brake pedal does not return to normal height, or if there is a rapid increase in pedal travel. This could be a sign that brake service may be required.

Replacing Brake System Parts

Always replace brake system parts with new, approved replacement parts. If this is not done, the brakes may not work properly. The braking performance expected can change in many other ways if the wrong replacement brake parts are installed or if parts are improperly installed.

Brake Fluid

The brake master cylinder reservoir is filled with GM approved DOT 4 brake fluid as indicated on the reservoir cap. See *Engine Compartment Overview* ⇨ *203* for the location of the reservoir.

Checking Brake Fluid

With the vehicle in P (Park) on a level surface, the brake fluid level should be between the minimum and maximum marks on the brake fluid reservoir.

There are only two reasons why the brake fluid level in the reservoir may go down:

- Normal brake lining wear. When new linings are installed, the fluid level goes back up.
- A fluid leak in the brake hydraulic system. Have the brake hydraulic system fixed. With a leak, the brakes will not work well.

Always clean the brake fluid reservoir cap and the area around the cap before removing it.

Do not top off the brake fluid. Adding fluid does not correct a leak. If fluid is added when the linings are worn, there will be too much fluid when new brake linings are installed. Add or remove fluid, as necessary, only when work is done on the brake hydraulic system.

⚠ Warning

If too much brake fluid is added, it can spill on the engine and burn, if the engine is hot enough. You or others could be burned, and the vehicle could be damaged. Add brake fluid only when work is done on the brake hydraulic system.

When the brake fluid falls to a low level, the brake warning light comes on. See *Brake System Warning Light* ⇨ *118*.

Brake fluid absorbs water over time which degrades the effectiveness of the brake fluid. Replace brake fluid at the specified intervals to prevent increased stopping distance. See *Maintenance Schedule* ⇨ *278*.

What to Add

Use only GM approved DOT 4 brake fluid from a clean, sealed container. See *Recommended Fluids and Lubricants* ⇨ *286*.

⚠ Warning

The wrong or contaminated brake fluid could result in damage to the brake system. This could result in the loss of braking leading to a possible injury. Always use the proper GM approved brake fluid.

Caution

If brake fluid is spilled on the vehicle's painted surfaces, the paint finish can be damaged. Immediately wash off any painted surface.

Battery - North America

The original equipment battery is maintenance free. Do not remove the cap and do not add fluid.

Refer to the replacement number shown on the original battery label when a new battery is needed. See *Engine Compartment Overview* ⇨ *203* for battery location.

⚠ Warning

WARNING: Battery posts, terminals, and related accessories contain lead and lead compounds, chemicals known to the State of California to cause

(Continued)

Warning (Continued)

cancer and birth defects or other reproductive harm. Batteries also contain other chemicals known to the State of California to cause cancer. **WASH HANDS AFTER HANDLING.** For more information go to www.P65Warnings.ca.gov/passenger-vehicle.

See *California Proposition 65 Warning* ⇨ *199* and the back cover.

Vehicle Storage

⚠ Warning

Batteries have acid that can burn you and gas that can explode. You can be badly hurt if you are not careful. See *Jump Starting - North America* ⇨ *261* for tips on working around a battery without getting hurt.

Infrequent Usage: Remove the black, negative (−) cable from the battery to keep the battery from running down.

Extended Storage: Remove the black, negative (−) cable from the battery or use a battery trickle charger.

All-Wheel Drive

Transfer Case

Under normal driving conditions, transfer case fluid does not require maintenance unless there is a fluid leak or unusual noise. If required, have the transfer case serviced by your dealer.

Starter Switch Check

⚠ Warning

When you are doing this inspection, the vehicle could move suddenly. If the vehicle moves, you or others could be injured.

1. Before starting this check, be sure there is enough room around the vehicle.
2. Apply both the parking brake and the regular brake.

   Do not use the accelerator pedal, and be ready to turn off the engine immediately if it starts.
3. Try to start the engine in each gear. The vehicle should start only in P (Park) or N (Neutral). If the vehicle starts in any other position, contact your dealer for service.

Automatic Transmission Shift Lock Control Function Check

⚠ Warning

When you are doing this inspection, the vehicle could move suddenly. If the vehicle moves, you or others could be injured.

1. Before starting this check, be sure there is enough room around the vehicle. It should be parked on a level surface.
2. Apply the parking brake. Be ready to apply the regular brake immediately if the vehicle begins to move.
3. With the engine off, turn the ignition on, but do not start the engine. Without applying the regular brake, try to move the shift lever out of P (Park) with normal effort. If the shift lever moves out of P (Park), contact your dealer for service.

Park Brake and P (Park) Mechanism Check

⚠ Warning

When you are doing this check, the vehicle could begin to move. You or others could be injured and property could be damaged. Make sure there is room in front of the vehicle in case it begins to roll. Be ready to apply the regular brake at once should the vehicle begin to move.

Park on a fairly steep hill, with the vehicle facing downhill. Keeping your foot on the regular brake, set the parking brake.

- To check the parking brake's holding ability: With the engine running and the transmission in N (Neutral), slowly remove foot

pressure from the regular brake pedal. Do this until the vehicle is held by the parking brake only.

- To check the P (Park) mechanism's holding ability: With the engine running, shift to P (Park). Then release the parking brake followed by the regular brake.

Contact your dealer if service is required.

Wiper Blade Replacement

Windshield wiper blades should be inspected for wear and cracking. See *Maintenance Schedule* ⇨ *278*.

Replacement blades come in different types and are removed in different ways. For proper type and length, see *Maintenance Replacement Parts* ⇨ *287*.

Caution

Allowing the wiper arm to touch the windshield when no wiper blade is installed could damage the windshield. Any damage that occurs would not be covered by the vehicle warranty. Do not allow the wiper arm to touch the windshield.

Front Wiper Blade Replacement

To replace the front wiper blades:

1. Lift the wiper arm from the windshield until no further movement is possible.

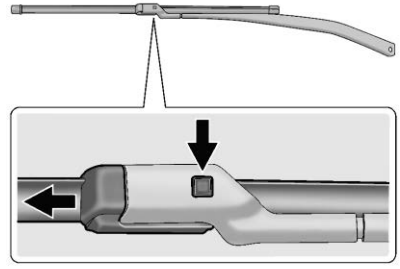

2. Press the release button on the top side of the wiper and pull the wiper blade out of the end of the wiper arm.
3. Install the wiper blade connector by sliding into the end of the wiper arm until the button on the wiper blade clicks into place with the wiper arm.
4. Place the wiper arm with the wiper blade in place back on the windshield.

Caution

Damage may occur if the wiper blades are not in contact with the windshield before turning on the wiper system.

Rear Wiper Blade Replacement

The rear wiper blade and wiper arm have a cover for protection. The cover must be removed before the wiper blade can be replaced.

To remove the cover:

1. Slide a plastic tool under the cover and push upward to unsnap.
2. Slide the cover toward the wiper blade tip to unhook it from the blade assembly.
3. Remove the cover.
4. After wiper blade replacement, ensure that the cover hook slides into the slot in the blade assembly.
5. Snap the cover down to secure.

To replace the wiper blade:

1. Lift the wiper arm away from the windshield.

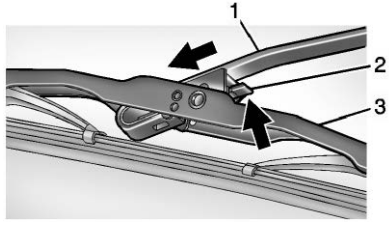

2. Push the release lever (2) to disengage the hook and push the wiper arm (1) out of the blade assembly (3).
3. Push the new blade assembly securely on the wiper arm until the release lever clicks into place.
4. Replace the wiper cover.

Windshield Replacement

Driver Assistance Systems

When a windshield replacement is needed and the vehicle is equipped with a front-looking camera sensor for the Driver Assistance Systems, the windshield must be installed according to GM specifications for these systems to work properly. If it is not, there may be unexpected behavior and/or messages from these systems.

Gas Strut(s)

This vehicle is equipped with gas strut(s) to provide assistance in lifting and holding open the hood/trunk/liftgate system in full open position.

⚠ Warning

If the gas struts that hold open the hood, trunk, and/or liftgate fail, you or others could be seriously injured. Take the vehicle to your

(Continued)

Warning (Continued)

dealer for service immediately. Visually inspect the gas struts for signs of wear, cracks, or other damage periodically. Check to make sure the hood/trunk/liftgate is held open with enough force. If struts are failing to hold the hood/trunk/liftgate, do not operate. Have the vehicle serviced.

Caution

Do not apply tape or hang any objects from gas struts. Also do not push down or pull on gas struts. This may cause damage to the vehicle.

See *Maintenance Schedule* ⇨ *278*.

Hood

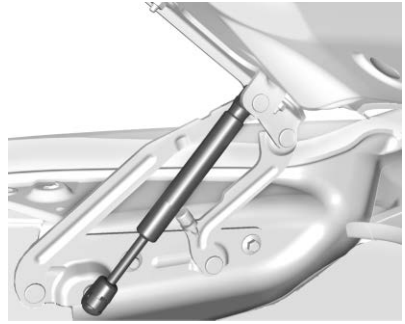

Trunk

Liftgate

Headlamp Aiming

Headlamp aim has been preset and should need no further adjustment.

If the vehicle is damaged in a crash, the headlamp aim may be affected. If adjustment to the headlamps is necessary, see your dealer.

Bulb Replacement

For the proper type of replacement bulbs, or any bulb changing procedure not listed in this section, contact your dealer.

Halogen Bulbs

⚠ Warning

Halogen bulbs have pressurized gas inside and can burst if you drop or scratch the bulb. You or others could be injured. Be sure to read and follow the instructions on the bulb package.

LED Lighting

This vehicle has several LED lamps. For replacement of any LED lighting assembly, contact your dealer.

Headlamps, Front Turn Signal and Parking Lamps

Base Level Headlamp Assembly

The base model vehicle has halogen high-beam and low-beam headlamps, an LED turn signal lamp, DRL, and sidemarker lamp on the headlamp assembly.

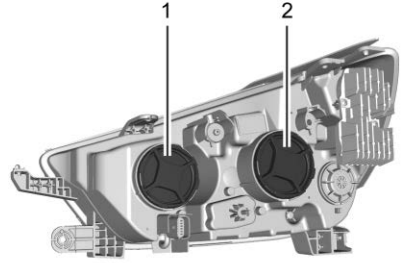

Passenger Side Shown, Driver Side Similar

1. High-Beam Headlamp
2. Low-Beam Headlamp

High-Beam Headlamp/ Low-Beam Headlamp

1. Open the hood. See *Hood* ⇨ *201*.

   For the driver side, remove the windshield washer bottle filter neck by firmly pulling it straight out.

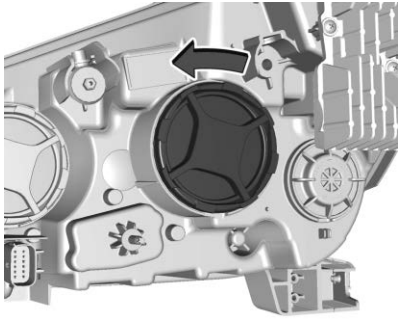

2. Remove the headlamp bulb access cover.
3. Turn the bulb counterclockwise and pull straight back.

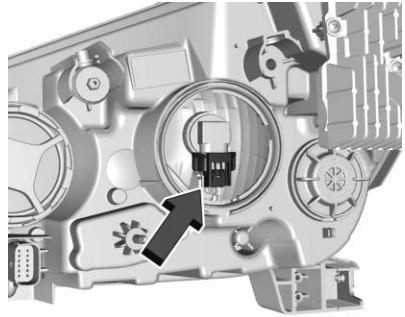

4. Disconnect the wiring harness connector from the bulb.
5. Install the new bulb in the headlamp assembly by turning clockwise.
6. Reconnect the wiring harness connector.
7. Install the headlamp bulb access cover.

   For the driver side, reinstall the windshield washer bottle filter neck by firmly pushing it straight into the bottle. Ensure that the filter neck clip engages into the underhood electrical center retainer.

Uplevel Headlamp Assembly

The uplevel model vehicle has LED high-beam and low-beam headlamps, a turn signal lamp, a parking lamp, a DRL, and sidemarker lamp, and lamps on the headlamp assembly.

Taillamps, Turn Signal, Sidemarker, Stoplamps, and Back-Up Lamps

Taillamp Assembly

The vehicle has halogen turn signal lamps and back-up lamps, LED tail/ stoplamps, and a sidemarker lamp on the taillamp assembly.

Driver Side

1. Remove the cover and screws attaching the panel to the vehicle interior. Remove the panel

2. Remove the cover.

Passenger Side

1. Remove the storage door and the tire repair kit.

2. Remove the cover.

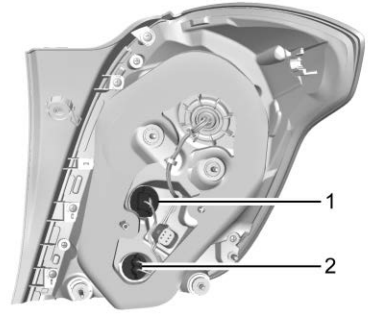

Driver Side Shown, Passenger Side Similar

1. Turn Signal Lamp
2. Back-Up Lamp

1. Remove the bulb holder.
2. Remove and replace the bulb.
3. Put the bulb holder into the taillamp assembly and tighten.
4. Close the covers.

License Plate Lamp

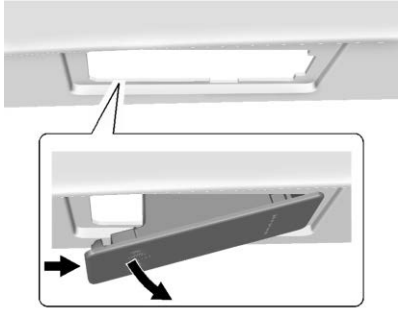

Lamp Assembly

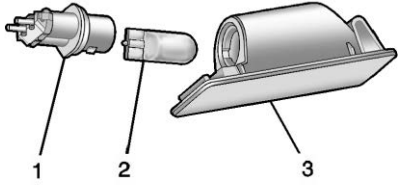

Bulb Assembly

To replace one of these bulbs:

1. Push the left end of the lamp assembly toward the right.
2. Turn the lamp assembly down to remove it.
3. Turn the bulb socket (1) counterclockwise to remove it from the lamp assembly (3).
4. Pull the bulb (2) straight out of the bulb socket (1).
5. Push the replacement bulb straight into the bulb socket and turn the bulb socket clockwise to install it into the lamp assembly.
6. Turn the lamp assembly into the lamp assembly opening engaging the clip side first.
7. Push on the lamp side opposite the clip until the lamp assembly snaps into place.

Electrical System

Electrical System Overload

The vehicle has fuses and circuit breakers to protect against an electrical system overload.

When the current electrical load is too heavy, the circuit breaker opens and closes, protecting the circuit until the current load returns to normal or the problem is fixed. This greatly reduces the chance of circuit overload and fire caused by electrical problems.

Fuses and circuit breakers protect power devices in the vehicle.

Replace a bad fuse with a new one of the identical size and rating.

If there is a problem on the road and a fuse needs to be replaced, the same amperage fuse can be borrowed. Choose some feature of the vehicle that is not needed to use and replace it as soon as possible.

Headlamp Wiring

An electrical overload may cause the lamps to go on and off, or in some cases to remain off. Have the headlamp wiring checked right away if the lamps go on and off or remain off.

Windshield Wipers

If the wiper motor overheats due to heavy snow or ice, the windshield wipers will stop until the motor cools and will then restart.

Although the circuit is protected from electrical overload, overload due to heavy snow or ice may cause wiper linkage damage. Always clear ice and heavy snow from the windshield before using the windshield wipers.

If the overload is caused by an electrical problem and not snow or ice, be sure to get it fixed.

Fuses and Circuit Breakers

The wiring circuits in the vehicle are protected from short circuits by a combination of fuses and circuit breakers. This greatly reduces the chance of damage caused by electrical problems.

⚠ Danger

Fuses and circuit breakers are marked with their ampere rating. Do not exceed the specified amperage rating when replacing fuses and circuit breakers. Use of an oversized fuse or circuit breaker can result in a vehicle fire. You and others could be seriously injured or killed.

To check a fuse, look at the silver-colored band inside the fuse. If the band is broken or melted, replace the fuse. Be sure to replace a bad fuse with a new one of the identical size and rating.

Fuses of the same amperage can be temporarily borrowed from another fuse location, if a fuse goes out. Replace the fuse as soon as possible.

Engine Compartment Fuse Block

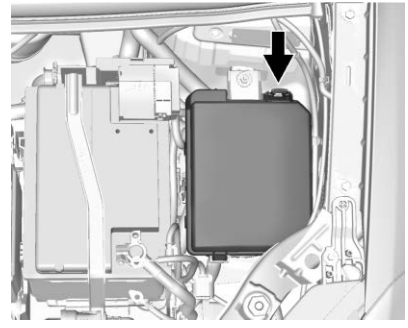

To remove the fuse block cover, squeeze the clip and lift it up.

Caution

Spilling liquid on any electrical component on the vehicle may damage it. Always keep the covers on any electrical component.

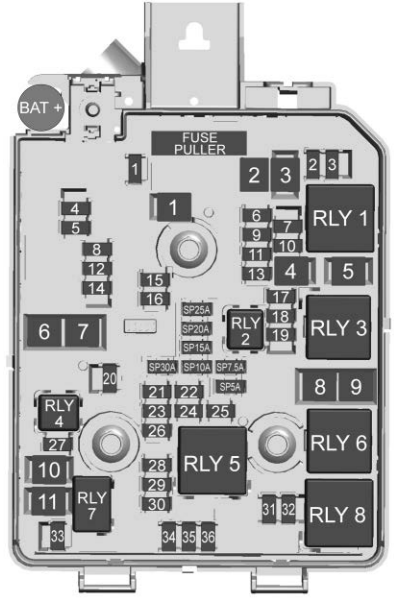

The vehicle may not be equipped with all of the fuses, relays, and features shown.

Mini Fuses	Usage
1	Sunroof
2	Exterior rearview mirror switch/Driver side power window/ Rain sensor/ Universal garage door opener
3	Canister vent solenoid
4	–
5	Electronic brake control module valve
6	Intelligent battery sensor
7	Electric steering column lock
8	Transmission control module/FICM
9	Automatic occupancy sensing module
10	Headlamp leveling switch/Headlamp leveling motor/Rear

Mini Fuses	Usage
	vision camera/ Interior rearview mirror
11	Rear wiper
12	Rear window defogger
13	Power lumbar switch
14	Exterior rearview mirror heater
15	Fuel system control module battery
16	Heated seat module/ Memory module
17	TIM DC DC converter/Fuel system control module RC/ Compass module
18	Engine control module RC/ Transmission control module RC/ FICM RC
19	Fuel pump

Mini Fuses	Usage
20	–
21	Fan relay (auxiliary BEC)
22	–
23	Ignition coil/ Injector coil
24	Washer pump
25	Automatic headlamp leveling
26	EMS Var 1
27	–/Auxiliary heater pump
28	–/Engine control module powertrain/ Ignition 3
29	Engine control module powertrain/ Ignition 1/Ignition 2
30	EMS Var 2
31	Left high-beam headlamp
32	Right high-beam headlamp

Mini Fuses	Usage
33	Engine control module battery
34	Horn
35	A/C clutch
36	Front fog lamps

J-Case Fuses	Usage
1	Electronic brake control module pump
2	Front wiper
3	Linear power module blower
4	IEC RC
5	–
7	–/Starter solenoid
8	Cooling fan low – mid
9	Cooling fan – high
10	EVP
11	Starter solenoid/ Starter pinion

U-Micro Relays	Usage
2	Fuel pump
4	–/Auxiliary heater pump

HC-Micro Relays	Usage
7	Starter/Starter pinion
10	Starter solenoid

Mini Relays	Usage
1	Run/Crank
3	Cooling fan – mid
5	Powertrain relay
8	Cooling fan – low

HC-Mini Relays	Usage
6	Cooling fan – high

Auxiliary Fuse Block

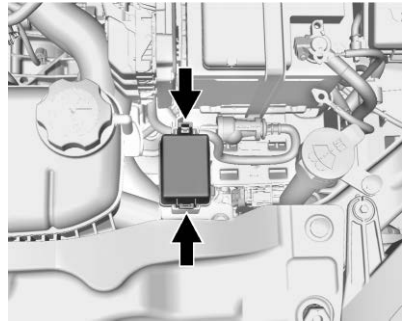

To remove the fuse block cover, squeeze the clips and lift it up.

Caution

Spilling liquid on any electrical component on the vehicle may damage it. Always keep the covers on any electrical component.

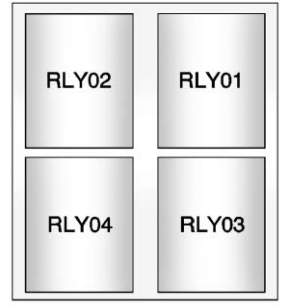

The vehicle may not be equipped with all of the relays and features shown.

Relays	Usage
01	Electric vacuum pump
02	Cooling fan control 1
03	Cooling fan control 2
04	N/A

Instrument Panel Fuse Block

The instrument panel fuse block is on the underside of the driver side instrument panel. To access the fuses, remove the storage compartment. To remove the storage compartment, open the compartment and pull it out.

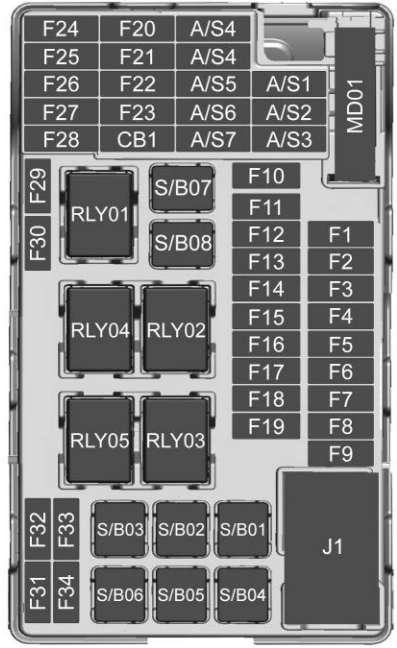

The vehicle may not be equipped with all of the fuses, relays, and features shown.

Fuses	Usage
F1	Body control module 1
F2	Body control module 2
F3	Body control module 3
F4	Body control module 4
F5	Body control module 5
F6	Body control module 6
F7	Body control module 7
F8	Body control module 8
F9	Discrete logic ignition switch
F10	Sensing diagnostic module battery
F11	Data link connector
F12	HVAC module/ICS
F13	Liftgate relay

Fuses	Usage
F14	Central gate module
F15	Lane departure warning/GENTEX
F16	Adaptive forward lighting module
F17	Electrical steering column lock
F18	Parking assist module/Side blind zone alert
F19	Body control module/Regulated voltage control
F20	Clock spring
F21	A/C/Accessory power outlet/PRNDL
F22	Auxiliary power outlet/DC center
F23	HVAC module/ICS
F24	–
F25	OnStar module/ Eraglonass

Fuses	Usage
F26	Heated steering wheel
F27	Instrument cluster/ Auxiliary heater/ Auxiliary virtual image display
F28	Trailer feed 2
F29	Infotainment system
F30	DC/DC 400W
F31	Instrument cluster module battery
F32	Silver box audio module/Navigation
F33	Trailer feed 1
F34	Passive entry/ Passive start

Midi Fuses	Usage
M01	Positive temperature coefficient

S/B Fuses	Usage
S/B01	Passenger power seat
S/B02	–
S/B03	Front power windows
S/B04	Rear power windows
S/B05	Logistic mode relay
S/B06	Driver power seat
S/B07	–
S/B08	Trailer interface module

Circuit Breaker	Usage
CB1	–

Relays	Usage
RLY01	Accessory/Retained accessory power
RLY02	Liftgate
RLY03	–
RLY04	–

Relays	Usage
RLY05	Logistic mode

Rear Compartment Fuse Block

The rear compartment fuse block is behind a cover on the driver side of the rear compartment. To access the fuses, remove the cover.

The vehicle may not be equipped with all of the fuses, relays, and features shown.

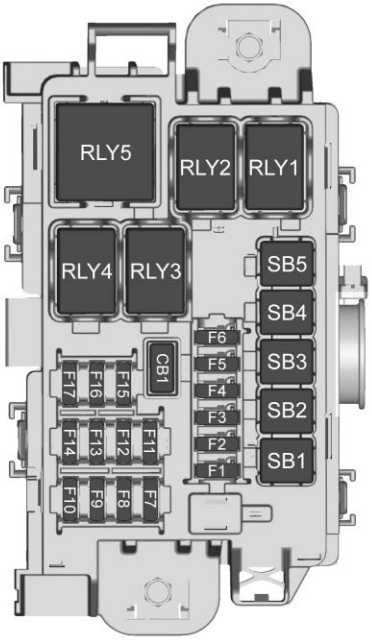

Fuses	Usage
F1	Amplifier audio
F2	Rear drive control module
F3	–
F4	–
F5	–
F6	–
F7	–
F8	–
F9	–
F10	–
F11	–
F12	–
F13	–
F14	–
F15	–
F16	–
F17	–

S/B Fuses	Usage
S/B01	DC-DC transformer 400W

S/B Fuses	Usage
S/B02	DC-DC transformer 400W
S/B03	DC/AC inverter module
S/B04	–
S/B05	–

Relays	Usage
RLY01	–
RLY02	–
RLY03	–
RLY04	–
RLY05	–

Circuit Breakers	Usage
CB1	–

Wheels and Tires

Tires

Every new GM vehicle has high-quality tires made by a leading tire manufacturer. See the warranty manual for information regarding the tire warranty and where to get service. For additional information refer to the tire manufacturer.

⚠ Warning

- Poorly maintained and improperly used tires are dangerous.
- Overloading the tires can cause overheating as a result of too much flexing. There could be a blowout and a serious crash. See *Vehicle Load Limits* ⇨ *162*.

(Continued)

Warning (Continued)

- Underinflated tires pose the same danger as overloaded tires. The resulting crash could cause serious injury. Check all tires frequently to maintain the recommended pressure. Tire pressure should be checked when the tires are cold.
- Overinflated tires are more likely to be cut, punctured, or broken by a sudden impact — such as when hitting a pothole. Keep tires at the recommended pressure.
- Worn or old tires can cause a crash. If the tread is badly worn, replace them.

(Continued)

Warning (Continued)

- Replace any tires that have been damaged by impacts with potholes, curbs, etc.
- Improperly repaired tires can cause a crash. Only the dealer or an authorized tire service center should repair, replace, dismount, and mount the tires.
- Do not spin the tires in excess of 56 km/h (35 mph) on slippery surfaces such as snow, mud, ice, etc. Excessive spinning may cause the tires to explode.

All-Season Tires

This vehicle may come with all-season tires. These tires are designed to provide good overall performance on most road surfaces and weather conditions. Original equipment tires designed to GM's specific tire performance criteria have a TPC specification code molded onto the sidewall. Original equipment all-season tires can be identified by the last two characters of this TPC code, which will be “MS.”

Consider installing winter tires on the vehicle if frequent driving on snow or ice-covered roads is expected. All-season tires provide adequate performance for most winter driving conditions, but they may not offer the same level of traction or performance as winter tires on snow or ice-covered roads. See *Winter Tires* ⇨ *236*.

Winter Tires

This vehicle was not originally equipped with winter tires. Winter tires are designed for increased traction on snow and ice-covered roads. Consider installing winter tires on the vehicle if frequent driving on ice or snow covered roads is expected. See your dealer for details regarding winter tire availability and proper tire selection. Also, see *Buying New Tires* ⇨ *250*.

With winter tires, there may be decreased dry road traction, increased road noise, and shorter tread life. After changing to winter tires, be alert for changes in vehicle handling and braking.

If using winter tires:

- Use tires of the same brand and tread type on all four wheel positions.
- Use only radial ply tires of the same size, load range, and speed rating as the original equipment tires.

Winter tires with the same speed rating as the original equipment tires may not be available for H, V, W, Y, and ZR speed rated tires. If winter tires with a lower speed rating are chosen, never exceed the tire's maximum speed capability.

Summer Tires

This vehicle may come with high performance summer tires. These tires have a special tread and compound that are optimized for maximum dry and wet road performance. This special tread and compound will have decreased performance in cold climates, and on ice and snow. It is recommended that winter tires be installed on the vehicle if frequent driving at temperatures below approximately 5 °C (40 °F) or on ice or snow covered roads is expected. See *Winter Tires* ⇨ *236*.

Caution

High performance summer tires have rubber compounds that lose flexibility and may develop surface cracks in the tread area at temperatures below −7 °C (20 °F). Always store high performance summer tires indoors and at temperatures

(Continued)

Caution (Continued)

above −7 °C (20 °F) when not in use. If the tires have been subjected to −7 °C (20 °F) or less, let them warm up in a heated space to at least 5 °C (40 °F) for 24 hours or more before being installed or driving a vehicle on which they are installed. Do not apply heat or blow heated air directly on the tires. Always inspect tires before use. See *Tire Inspection* ⇨ *248*.

Tire Sidewall Labeling

Useful information about a tire is molded into its sidewall. The examples show a typical passenger vehicle tire and a compact spare tire sidewall.

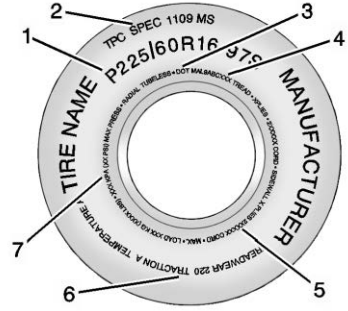

Passenger (P-Metric) Tire Example

(1) Tire Size : The tire size is a combination of letters and numbers used to define a particular tire's width, height, aspect ratio, construction type, and service description. See the “Tire Size” illustration later in this section.

(2) TPC Spec (Tire Performance Criteria Specification) : Original equipment tires designed to GM's specific tire performance criteria have a TPC specification

code molded onto the sidewall. GM's TPC specifications meet or exceed all federal safety guidelines.

(3) DOT (Department of Transportation) : The Department of Transportation (DOT) code indicates that the tire is in compliance with the U.S. Department of Transportation Motor Vehicle Safety Standards.

DOT Tire Date of Manufacture : The last four digits of the TIN indicate the tire manufactured date. The first two digits represent the week (01–52) and the last two digits, the year. For example, the third week of the year 2010 would have a four-digit DOT date of 0310.

(4) Tire Identification Number (TIN) : The letters and numbers following the DOT (Department of Transportation) code are the Tire Identification Number (TIN). The TIN shows the manufacturer and plant code, tire size, and date the tire was manufactured. The TIN is molded onto both sides of the tire, although only one side may have the date of manufacture.

(5) Tire Ply Material : The type of cord and number of plies in the sidewall and under the tread.

(6) Uniform Tire Quality Grading (UTQG) : Tire manufacturers are required to grade tires based on three performance factors: treadwear, traction, and temperature resistance. For more information see *Uniform Tire Quality Grading* ⇨ *252*.

(7) Maximum Cold Inflation Load Limit : Maximum load that can be carried and the maximum pressure needed to support that load.

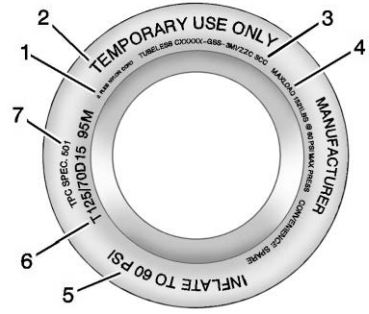

Compact Spare Tire Example

(1) Tire Ply Material : The type of cord and number of plies in the sidewall and under the tread.

(2) Temporary Use Only : The compact spare tire or temporary use tire should not be driven at speeds over 80 km/h (50 mph). The compact spare tire is for emergency use when a regular road tire has lost air and gone flat. If the vehicle has a compact spare tire, see *Compact Spare Tire* ⇨ *260* and *If a Tire Goes Flat* ⇨ *254*.

(3) Tire Identification Number (TIN) : The letters and numbers following the DOT (Department of Transportation) code are the Tire Identification Number (TIN). The TIN shows the manufacturer and plant code, tire size, and date the tire was manufactured. The TIN is molded onto both sides of the tire, although only one side may have the date of manufacture.

(4) Maximum Cold Inflation Load Limit : Maximum load that can be carried and the maximum pressure needed to support that load.

(5) Tire Inflation : The temporary use tire or compact spare tire should be inflated to 420 kPa (60 psi). For more information on tire pressure and inflation see *Tire Pressure* ⇨ *242*.

(6) Tire Size : A combination of letters and numbers define a tire's width, height, aspect ratio, construction type, and service description. The letter T as the first character in the tire size means the tire is for temporary use only.

(7) TPC Spec (Tire Performance Criteria Specification) : Original equipment tires designed to GM's specific tire performance criteria have a TPC specification code molded onto the sidewall. GM's TPC specifications meet or exceed all federal safety guidelines.

Tire Designations

Tire Size

The following is an example of a typical passenger vehicle tire size.

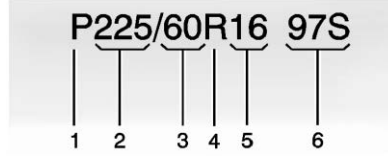

(1) Passenger (P-Metric) Tire : The United States version of a metric tire sizing system. The letter P as the first character in the tire size means a passenger vehicle tire engineered to standards set by the U.S. Tire and Rim Association.

(2) Tire Width : The three-digit number indicates the tire section width in millimeters from sidewall to sidewall.

(3) Aspect Ratio : A two-digit number that indicates the tire height-to-width measurements. For example, if the tire size aspect ratio is 60, as shown in item 3 of the illustration, it would mean that the tire's sidewall is 60 percent as high as it is wide.

(4) Construction Code : A letter code is used to indicate the type of ply construction in the tire. The letter R means radial ply construction; the letter D means diagonal or bias ply construction; and the letter B means belted-bias ply construction.

(5) Rim Diameter : Diameter of the wheel in inches.

(6) Service Description : These characters represent the load index and speed rating of the tire. The load index represents the load carrying capacity a tire is certified to carry. The speed rating is the maximum speed a tire is certified to carry a load.

Tire Terminology and Definitions

Air Pressure : The amount of air inside the tire pressing outward on each square inch of the tire. Air pressure is expressed in kPa (kilopascal) or psi (pounds per square inch).

Accessory Weight : The combined weight of optional accessories. Some examples of optional accessories are automatic transmission, power windows, power seats, and air conditioning.

Aspect Ratio : The relationship of a tire's height to its width.

Belt : A rubber coated layer of cords between the plies and the tread. Cords may be made from steel or other reinforcing materials.

Bead : The tire bead contains steel wires wrapped by steel cords that hold the tire onto the rim.

Bias Ply Tire : A pneumatic tire in which the plies are laid at alternate angles less than 90 degrees to the centerline of the tread.

Cold Tire Pressure : The amount of air pressure in a tire, measured in kPa (kilopascal) or psi (pounds per square inch) before a tire has built up heat from driving. See *Tire Pressure* ⇨ *242*.

Curb Weight : The weight of a motor vehicle with standard and optional equipment including the maximum capacity of fuel, oil, and coolant, but without passengers and cargo.

DOT Markings : A code molded into the sidewall of a tire signifying that the tire is in compliance with the U.S. Department of Transportation (DOT) Motor Vehicle Safety Standards. The DOT code includes the Tire Identification

Number (TIN), an alphanumeric designator which can also identify the tire manufacturer, production plant, brand, and date of production.

GVWR : Gross Vehicle Weight Rating. See *Vehicle Load Limits* ⇨ *162*.

GAWR FRT : Gross Axle Weight Rating for the front axle. See *Vehicle Load Limits* ⇨ *162*.

GAWR RR : Gross Axle Weight Rating for the rear axle. See *Vehicle Load Limits* ⇨ *162*.

Intended Outboard Sidewall : The side of an asymmetrical tire that must always face outward when mounted on a vehicle.

Kilopascal (kPa) : The metric unit for air pressure.

Light Truck (LT-Metric) Tire : A tire used on light duty trucks and some multipurpose passenger vehicles.

Load Index : An assigned number ranging from 1 to 279 that corresponds to the load carrying capacity of a tire.

Maximum Inflation Pressure : The maximum air pressure to which a cold tire can be inflated. The maximum air pressure is molded onto the sidewall.

Maximum Load Rating : The load rating for a tire at the maximum permissible inflation pressure for that tire.

Maximum Loaded Vehicle Weight : The sum of curb weight, accessory weight, vehicle capacity weight, and production options weight.

Normal Occupant Weight : The number of occupants a vehicle is designed to seat multiplied by 68 kg (150 lb). See *Vehicle Load Limits* ⇨ *162*.

Occupant Distribution : Designated seating positions.

Outward Facing Sidewall : The side of an asymmetrical tire that has a particular side that faces outward when mounted on a vehicle. The side of the tire that contains a whitewall, bears white lettering, or bears manufacturer, brand, and/or model name molding that is higher or deeper than the same moldings on the other sidewall of the tire.

Passenger (P-Metric) Tire : A tire used on passenger cars and some light duty trucks and multipurpose vehicles.

Recommended Inflation Pressure : Vehicle manufacturer's recommended tire inflation pressure as shown on the tire placard.
See *Tire Pressure* ⇨ *242* and *Vehicle Load Limits* ⇨ *162*.

Radial Ply Tire : A pneumatic tire in which the ply cords that extend to the beads are laid at 90 degrees to the centerline of the tread.

Rim : A metal support for a tire and upon which the tire beads are seated.

Sidewall : The portion of a tire between the tread and the bead.

Speed Rating : An alphanumeric code assigned to a tire indicating the maximum speed at which a tire can operate.

Traction : The friction between the tire and the road surface. The amount of grip provided.

Tread : The portion of a tire that comes into contact with the road.

Treadwear Indicators : Narrow bands, sometimes called wear bars, that show across the tread of a tire when only 1.6 mm (1/16 in) of tread remains. See *When It Is Time for New Tires* ⇨ *249*.

UTQGS (Uniform Tire Quality Grading Standards) : A tire information system that provides consumers with ratings for a tire's traction, temperature, and treadwear. Ratings are determined by tire manufacturers using government testing procedures. The ratings are molded into the sidewall of the tire. See *Uniform Tire Quality Grading* ⇨ *252*.

Vehicle Capacity Weight : The number of designated seating positions multiplied by 68 kg (150 lb) plus the rated cargo load. See *Vehicle Load Limits* ⇨ *162*.

Vehicle Maximum Load on the Tire : Load on an individual tire due to curb weight, accessory weight, occupant weight, and cargo weight.

Vehicle Placard : A label permanently attached to a vehicle showing the vehicle capacity weight and the original equipment tire size and recommended inflation pressure. See “Tire and Loading Information Label” under *Vehicle Load Limits* ⇨ *162*.

Tire Pressure

Tires need the correct amount of air pressure to operate effectively.

Caution

Neither tire underinflation nor overinflation is good. Underinflated tires, or tires that do not have enough air, can result in:

- Tire overloading and overheating which could lead to a blowout.

(Continued)

Caution (Continued)

- Premature or irregular wear.
- Poor handling.
- Reduced fuel economy.

Overinflated tires, or tires that have too much air, can result in:

- Unusual wear.
- Poor handling.
- Rough ride.
- Needless damage from road hazards.

The Tire and Loading Information label on the vehicle indicates the original equipment tires and the correct cold tire inflation pressures. The recommended pressure is the minimum air pressure needed to support the vehicle's maximum load carrying capacity. See *Vehicle Load Limits* ⇨ *162*.

How the vehicle is loaded affects vehicle handling and ride comfort. Never load the vehicle with more weight than it was designed to carry.

When to Check

Check the tires once a month or more. Do not forget the compact spare, if the vehicle has one. The cold compact spare tire pressure should be at 420 kPa (60 psi). See *Compact Spare Tire* ⇨ *260*.

How to Check

Use a good quality pocket-type gauge to check tire pressure. Proper tire inflation cannot be determined by looking at the tire. Check the tire inflation pressure when the tires are cold, meaning the vehicle has not been driven for at least three hours or no more than 1.6 km (1 mi).

Remove the valve cap from the tire valve stem. Press the tire gauge firmly onto the valve to get a pressure measurement. If the cold tire inflation pressure matches the recommended pressure on the Tire and Loading Information label, no further adjustment is necessary. If the inflation pressure is low, add air until the recommended pressure is reached. If the inflation pressure is high, press on the metal stem in the center of the tire valve to release air.

Recheck the tire pressure with the tire gauge.

Put the valve caps back on the valve stems to keep out dirt and moisture and prevent leaks. Use only valve caps designed for the vehicle by GM. TPMS sensors

could be damaged and would not be covered by the vehicle warranty.

Tire Pressure Monitor System

The Tire Pressure Monitor System (TPMS) uses radio and sensor technology to check tire pressure levels. The TPMS sensors monitor the air pressure in your tires and transmit tire pressure readings to a receiver located in the vehicle.

Each tire, including the spare (if provided), should be checked monthly when cold and inflated to the inflation pressure recommended by the vehicle manufacturer on the vehicle placard or tire inflation pressure label. (If your vehicle has tires of a different size than the size indicated on the vehicle placard or tire inflation pressure label, you should determine the proper tire inflation pressure for those tires.)

As an added safety feature, your vehicle has been equipped with a tire pressure monitoring system (TPMS) that illuminates a low tire pressure telltale when one or more of your tires is significantly under-inflated.

Accordingly, when the low tire pressure telltale illuminates, you should stop and check your tires as soon as possible, and inflate them to the proper pressure. Driving on a significantly under-inflated tire causes the tire to overheat and can lead to tire failure. Under-inflation also reduces fuel efficiency and tire tread life, and may affect the vehicle's handling and stopping ability.

Please note that the TPMS is not a substitute for proper tire maintenance, and it is the driver's responsibility to maintain correct tire pressure, even if under-inflation has not reached the level to trigger illumination of the TPMS low tire pressure telltale.

Your vehicle has also been equipped with a TPMS malfunction indicator to indicate when the system is not operating properly. The TPMS malfunction indicator is combined with the low tire pressure telltale. When the system detects a malfunction, the telltale will flash for approximately one minute and then remain continuously illuminated. This sequence will continue upon subsequent vehicle start-ups as long as the malfunction exists.

When the malfunction indicator is illuminated, the system may not be able to detect or signal low tire pressure as intended. TPMS malfunctions may occur for a variety of reasons, including the installation of replacement or alternate tires or wheels on the vehicle that prevent the TPMS from functioning properly. Always check the TPMS malfunction telltale after replacing one or more tires or wheels on your vehicle to ensure that the replacement or alternate tires and wheels allow the TPMS to continue to function properly.

See *Tire Pressure Monitor Operation* ⇨ *245*.

See *Radio Frequency Statement* ⇨ *302*.

Tire Pressure Monitor Operation

This vehicle may have a Tire Pressure Monitor System (TPMS). The TPMS is designed to warn the driver when a low tire pressure condition exists. TPMS sensors are mounted onto each tire and wheel assembly, excluding the spare tire and wheel assembly. The TPMS sensors monitor the air pressure in the tires and transmit the tire pressure readings to a receiver located in the vehicle.

When a low tire pressure condition is detected, the TPMS illuminates the low tire pressure warning light located on the instrument cluster. If the warning light comes on, stop as soon as possible and inflate the tires to the recommended pressure shown on the Tire and Loading Information label. See *Vehicle Load Limits* ⇨ *162*.

A message to check the pressure in a specific tire may display in the Driver Information Center (DIC). The low tire pressure warning light and the DIC warning message, if equipped, come on at each ignition cycle until the tires are inflated to the correct inflation pressure. Using the DIC, it may be possible to view the tire pressure levels. For additional information and details about the DIC operation and displays, see *Driver Information Center (DIC) (Uplevel)* ⇨ *125* or *Driver Information Center (DIC) (Base Level)* ⇨ *123*.

The low tire pressure warning light may come on in cool weather when the vehicle is first started, and then turn off as the vehicle is driven. This could be an early indicator that the air pressure is getting low and needs to be inflated to the proper pressure.

A Tire and Loading Information label shows the size of the original equipment tires and the correct inflation pressure for the tires when they are cold. See *Vehicle Load Limits* ⇨ *162*, for an example of the Tire and Loading Information label and its location. Also see *Tire Pressure* ⇨ *242*.

The TPMS can warn about a low tire pressure condition, but it does not replace normal tire maintenance. See *Tire Inspection* ⇨ *248*, *Tire Rotation* ⇨ *248*, and *Tires* ⇨ *235*.

Caution

Tire sealant materials are not all the same. A non-approved tire sealant could damage the TPMS sensors. TPMS sensor damage caused by using an incorrect tire sealant is not covered by the vehicle warranty. Always use only the GM approved tire sealant available through your dealer or included in the vehicle.

TPMS Malfunction Light and Message

The TPMS will not function properly if one or more of the TPMS sensors are missing or inoperable. When the system detects a malfunction, the low tire pressure warning light, defined above, flashes for about one minute and then stays on for the remainder of the ignition cycle. A DIC warning message may also display. The malfunction light and DIC warning message, if equipped, come on at each ignition cycle until the problem is corrected. Some of the conditions that can cause these to come on are:

- One of the road tires has been replaced with the spare tire. The spare tire does not have a TPMS sensor. The malfunction light and the DIC message, if equipped, should go off after the road tire is replaced and the sensor matching process is performed successfully. See "TPMS Sensor Matching Process" later in this section.
- The TPMS sensor matching process was not done or not completed successfully after rotating the tires. The malfunction light and the DIC message, if equipped, should go off after successfully completing the sensor matching process. See "TPMS Sensor Matching Process" later in this section.
- One or more TPMS sensors are missing or damaged. The malfunction light and the DIC message, if equipped, should go off when the TPMS sensors are installed and the sensor matching process is performed successfully. See your dealer for service.
- Replacement tires or wheels do not match the original equipment tires or wheels. Tires and wheels other than those recommended could prevent the TPMS from functioning properly. See *Buying New Tires* ⇨ *250*.
- Operating electronic devices or being near facilities using radio wave frequencies similar to the TPMS could cause the TPMS sensors to malfunction.

If the TPMS is not functioning properly, it cannot detect or signal a low tire pressure condition. See your dealer for service if the TPMS malfunction light and DIC message, if equipped, come on and stay on.

TPMS Sensor Matching Process

Each TPMS sensor has a unique identification code. The identification code needs to be matched to a new tire/wheel position after rotating the vehicle’s tires or replacing one or more of the TPMS sensors. Also, the TPMS sensor matching process should be performed after replacing a spare tire with a road tire containing the TPMS sensor. The malfunction light and the DIC message, if equipped, should go off at the next ignition cycle. The sensors are matched to the tire/wheel positions, using a TPMS

relearn tool, in the following order: driver side front tire, passenger side front tire, passenger side rear tire, and driver side rear. See your dealer for service or to purchase a relearn tool. A TPMS relearn tool can also be purchased. See Tire Pressure Monitor Sensor Activation Tool at www.gmtoolsandequipment.com or call 1-800-GM TOOLS (1-800-468-6657).

There are two minutes to match the first tire/wheel position, and five minutes overall to match all four tire/wheel positions. If it takes longer, the matching process stops and must be restarted.

The TPMS sensor matching process is:

1. Set the parking brake.
2. Place the vehicle in Service Mode. See *Ignition Positions* ⇨ *166*.
3. Use the MENU button to select the Vehicle Information Menu (Menu 2) in the Driver Information Center (DIC).
4. Use the thumbwheel (or up and down arrows) to scroll to the Tire Pressure Menu Item screen.
5. Press and hold the SET/CLR button to begin the sensor matching process.

   A message requesting acceptance of the process may display.
6. If requested, press the SET/CLR button again to confirm the selection.

   The horn sounds twice to signal the receiver is in relearn mode and the TIRE LEARN or TIRE LEARNING ACTIVE message displays on the DIC screen.
7. Start with the driver side front tire.
8. Place the relearn tool against the tire sidewall, near the valve stem. Then press the button to activate the TPMS sensor. A horn chirp confirms that the sensor identification code has been matched to this tire and wheel position.
9. Proceed to the passenger side front tire, and repeat the procedure in Step 8.
10. Proceed to the passenger side rear tire, and repeat the procedure in Step 8.
11. Proceed to the driver side rear tire, and repeat the procedure in Step 8. The horn sounds two times to indicate the sensor identification code has been matched to the driver side rear tire, and the TPMS sensor matching process is no longer active. The TIRE LEARN or TIRE LEARNING ACTIVE message on the DIC display screen goes off.
12. Turn the vehicle off.
13. Set all four tires to the recommended air pressure level as indicated on the Tire and Loading Information label.

Tire Inspection

We recommend that the tires, including the spare tire, if the vehicle has one, be inspected for signs of wear or damage at least once a month.

Replace the tire if:

- The indicators at three or more places around the tire can be seen.
- There is cord or fabric showing through the tire's rubber.
- The tread or sidewall is cracked, cut, or snagged deep enough to show cord or fabric.
- The tire has a bump, bulge, or split.
- The tire has a puncture, cut, or other damage that cannot be repaired well because of the size or location of the damage.

Tire Rotation

Tires should be rotated every 12 000 km (7,500 mi). See *Maintenance Schedule* ⇨ *278*.

Tires are rotated to achieve a more uniform wear for all tires. The first rotation is the most important.

Anytime unusual wear is noticed, rotate the tires as soon as possible, check for proper tire inflation pressure, and check for damaged tires or wheels. If the unusual wear continues after the rotation, check the wheel alignment.
See *When It Is Time for New Tires* ⇨ *249* and *Wheel Replacement* ⇨ *253*.

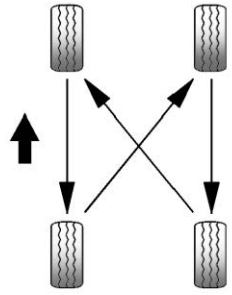

Use this rotation pattern when rotating the tires.

Do not include the compact spare tire in the tire rotation.

Adjust the front and rear tires to the recommended inflation pressure on the Tire and Loading Information label after the tires have been rotated.
See *Tire Pressure* ⇨ *242* and *Vehicle Load Limits* ⇨ *162*.

Reset the Tire Pressure Monitor System. See *Tire Pressure Monitor Operation* ⇨ *245*.

Check that all wheel nuts are properly tightened. See “Wheel Nut Torque” under *Capacities and Specifications* ⇨ *290*.

⚠ Warning

Rust or dirt on a wheel, or on the parts to which it is fastened, can make wheel nuts become loose after time. The wheel could come off and cause an accident. When changing a wheel, remove any rust or dirt from places where the wheel attaches to the vehicle. In an emergency, a cloth or a paper towel can be used; however, use a scraper or wire brush later to remove all rust or dirt.

Lightly coat the center of the wheel hub with wheel bearing grease after a wheel change or tire rotation to prevent corrosion or rust build-up. Do not get grease on the flat wheel mounting surface or on the wheel nuts or bolts.

When It Is Time for New Tires

Factors such as maintenance, temperatures, driving speeds, vehicle loading, and road conditions affect the wear rate of the tires.

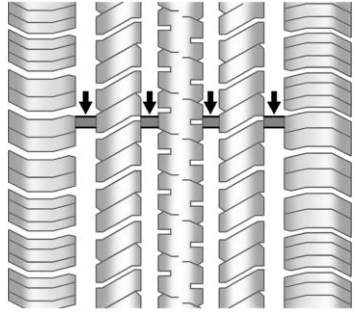

Treadwear indicators are one way to tell when it is time for new tires. Treadwear indicators appear when the tires have only 1.6 mm (1/16 in) or less of tread remaining.
See *Tire Inspection* ⇨ *248* and *Tire Rotation* ⇨ *248*.

The rubber in tires ages over time. This also applies to the spare tire, if the vehicle has one, even if it is never used. Multiple factors including temperatures, loading conditions, and inflation pressure maintenance affect how fast aging takes place. GM recommends that tires, including the spare if equipped, be replaced after six years, regardless of tread wear. The tire manufacture date is the last four digits of the DOT Tire Identification Number (TIN) which is molded into one side of the tire sidewall. The first two digits represent the week (01–52) and the last two digits, the year. For example, the third week of the year 2010 would have a four-digit DOT date of 0310.

Vehicle Storage

Tires age when stored normally mounted on a parked vehicle. Park a vehicle that will be stored for at least a month in a cool, dry, clean area away from direct sunlight to slow aging. This area should be free

of grease, gasoline, or other substances that can deteriorate rubber.

Parking for an extended period can cause flat spots on the tires that may result in vibrations while driving. When storing a vehicle for at least a month, remove the tires or raise the vehicle to reduce the weight from the tires.

Buying New Tires

GM has developed and matched specific tires for the vehicle. The original equipment tires installed were designed to meet General Motors Tire Performance Criteria Specification (TPC Spec) system rating. When replacement tires are needed, GM strongly recommends buying tires with the same TPC Spec rating.

GM's exclusive TPC Spec system considers over a dozen critical specifications that impact the overall performance of the vehicle, including brake system performance, ride and handling, traction control, and tire pressure monitoring performance. GM's TPC Spec number is molded onto the tire's sidewall near the tire size. If the tires have an all-season tread design, the TPC Spec number will be followed by MS for mud and snow. See *Tire Sidewall Labeling* ⇨ *237*.

GM recommends replacing worn tires in complete sets of four. Uniform tread depth on all tires will help to maintain the performance of the vehicle. Braking and handling performance may be adversely affected if all the tires are not replaced at the same time. If proper rotation and maintenance have been done, all four tires should wear out at about the same time. See *Tire Rotation* ⇨ *248*. However, if it is necessary to replace only one axle set of worn tires, place the new tires on the rear axle.

Winter tires with the same speed rating as the original equipment tires may not be available for H, V, W, Y and ZR speed rated tires. Never exceed the winter tires' maximum speed capability when using winter tires with a lower speed rating.

⚠ Warning

Tires could explode during improper service. Attempting to mount or dismount a tire could cause injury or death. Only your dealer or authorized tire service center should mount or dismount the tires.

⚠ Warning

Mixing tires of different sizes, brands, or types may cause loss of control of the vehicle, resulting in a crash or other vehicle damage. Use the correct size, brand, and type of tires on all wheels.

⚠ Warning

Using bias-ply tires on the vehicle may cause the wheel rim flanges to develop cracks after many miles of driving. A tire and/or wheel could fail suddenly and cause a crash. Use only radial-ply tires with the wheels on the vehicle.

If the vehicle tires must be replaced with a tire that does not have a TPC Spec number, make sure they are the same size, load range, speed rating, and construction (radial) as the original tires.

Vehicles that have a tire pressure monitoring system could give an inaccurate low-pressure warning if non-TPC Spec rated tires are installed. See *Tire Pressure Monitor System* ⇨ *244*.

The Tire and Loading Information label indicates the original equipment tires on the vehicle. See *Vehicle Load Limits* ⇨ *162*.

Different Size Tires and Wheels

If wheels or tires are installed that are a different size than the original equipment wheels and tires, vehicle performance, including its braking, ride and handling characteristics, stability, and resistance to rollover may be affected. If the vehicle has electronic systems such as antilock brakes, rollover airbags, traction control, electronic stability control, or All-Wheel Drive, the performance of these systems can also be affected.

⚠ Warning

If different sized wheels are used, there may not be an acceptable level of performance and safety if tires not recommended for those wheels are selected. This increases the chance of a crash and serious injury. Only use GM specific wheel and tire systems developed for the vehicle, and have them properly installed by a GM certified technician.

See *Buying New Tires* ⇨ *250* and *Accessories and Modifications* ⇨ *200*.

Uniform Tire Quality Grading

The following information relates to the system developed by the United States National Highway Traffic Safety Administration (NHTSA), which grades tires by treadwear, traction, and temperature performance. This applies only to vehicles sold in the United States. The grades are molded on the sidewalls of most passenger car tires. The Uniform Tire Quality Grading (UTQG) system does not apply to deep tread, winter tires, compact spare tires, tires with nominal rim diameters of 10 to 12 inches (25 to 30 cm), or to some limited-production tires.

While the tires available on General Motors passenger cars and light trucks may vary with respect to these grades, they must also conform to federal safety requirements and additional General Motors Tire Performance Criteria (TPC) standards.

Quality grades can be found where applicable on the tire sidewall between tread shoulder and maximum section width. For example:

Treadwear 200 Traction AA Temperature A

All Passenger Car Tires Must Conform to Federal Safety Requirements In Addition To These Grades.

Treadwear

The treadwear grade is a comparative rating based on the wear rate of the tire when tested under controlled conditions on a specified government test course. For example, a tire graded 150 would wear one and one-half (1½) times as well on the government course as a tire graded 100. The relative performance of tires depends upon the actual conditions of their use, however, and may depart significantly from the norm due to variations in driving habits, service practices and differences in road characteristics and climate.

Traction

The traction grades, from highest to lowest, are AA, A, B, and C. Those grades represent the tire's ability to stop on wet pavement as measured under controlled conditions on specified government test surfaces of asphalt and concrete. A tire marked C may have poor traction performance. Warning: The traction grade assigned to this tire is based on straight-ahead braking traction tests, and does not include

acceleration, cornering, hydroplaning, or peak traction characteristics.

Temperature

The temperature grades are A (the highest), B, and C, representing the tire's resistance to the generation of heat and its ability to dissipate heat when tested under controlled conditions on a specified indoor laboratory test wheel. Sustained high temperature can cause the material of the tire to degenerate and reduce tire life, and excessive temperature can lead to sudden tire failure. The grade C corresponds to a level of performance which all passenger car tires must meet under the Federal Motor Safety Standard No. 109. Grades B and A represent higher levels of performance on the laboratory test wheel than the minimum required by law. Warning: The temperature grade for this tire is established for a tire that is properly inflated and not overloaded. Excessive speed, underinflation, or excessive loading, either separately or in combination, can cause heat buildup and possible tire failure.

Wheel Alignment and Tire Balance

The tires and wheels were aligned and balanced at the factory to provide the longest tire life and best overall performance. Adjustments to wheel alignment and tire balancing are not necessary on a regular basis. Consider an alignment check if there is unusual tire wear or the vehicle is significantly pulling to one side or the other. Some slight pull to the left or right, depending on the crown of the road and/or other road surface variations such as troughs or ruts, is normal. If the vehicle is vibrating when driving on a smooth road, the tires and wheels may need to be rebalanced. See your dealer for proper diagnosis.

Wheel Replacement

Replace any wheel that is bent, cracked, or badly rusted or corroded. If wheel nuts keep coming loose, the wheel, wheel bolts, and wheel nuts should be replaced.
If the wheel leaks air, replace it. Some aluminum wheels can be repaired. See your dealer if any of these conditions exist.

Your dealer will know the kind of wheel that is needed.

Each new wheel should have the same load-carrying capacity, diameter, width, offset, and be mounted the same way as the one it replaces.

Replace wheels, wheel bolts, wheel nuts, or Tire Pressure Monitor System (TPMS) sensors with new GM original equipment parts.

⚠ Warning

Using the wrong replacement wheels, wheel bolts, or wheel nuts can be dangerous. It could affect the braking and handling of the vehicle. Tires can lose air, and cause loss of control, causing a crash. Always use the correct wheel, wheel bolts, and wheel nuts for replacement.

Caution

The wrong wheel can also cause problems with bearing life, brake cooling, speedometer or odometer calibration, headlamp aim, bumper height, vehicle ground clearance, and tire or tire chain clearance to the body and chassis.

Used Replacement Wheels

⚠ Warning

Replacing a wheel with a used one is dangerous. How it has been used or how far it has been driven may be unknown. It could fail suddenly and cause a crash. When replacing wheels, use a new GM original equipment wheel.

Tire Chains

⚠ Warning

Do not use tire chains. There is not enough clearance. Tire chains used on a vehicle without the proper amount of clearance can cause damage to the brakes, suspension, or other vehicle parts. The area damaged by the tire chains could cause loss of control and a crash.

(Continued)

Warning (Continued)

Use another type of traction device only if its manufacturer recommends it for the vehicle's tire size combination and road conditions. Follow that manufacturer's instructions. To avoid vehicle damage, drive slow and readjust or remove the traction device if it contacts the vehicle. Do not spin the wheels. If traction devices are used, install them on the front tires.

If a Tire Goes Flat

It is unusual for a tire to blow out while driving, especially if the tires are maintained properly. See *Tires* ⇨ *235*. If air goes out of a tire, it is much more likely to leak out slowly. But if there ever is a blowout, here are a few tips about what to expect and what to do:

If a front tire fails, the flat tire creates a drag that pulls the vehicle toward that side. Take your foot off

the accelerator pedal and grip the steering wheel firmly. Steer to maintain lane position, and then gently brake to a stop, well off the road, if possible.

A rear blowout, particularly on a curve, acts much like a skid and may require the same correction as used in a skid. Stop pressing the accelerator pedal and steer to straighten the vehicle. It may be very bumpy and noisy. Gently brake to a stop, well off the road, if possible.

⚠ Warning

Driving on a flat tire will cause permanent damage to the tire. Re-inflating a tire after it has been driven on while severely underinflated or flat may cause a blowout and a serious crash. Never attempt to re-inflate a tire that has been driven on while severely underinflated or flat. Have your dealer or an authorized

(Continued)

Warning (Continued)

tire service center repair or replace the flat tire as soon as possible.

⚠ Warning

Lifting a vehicle and getting under it to do maintenance or repairs is dangerous without the appropriate safety equipment and training. If a jack is provided with the vehicle, it is designed only for changing a flat tire. If it is used for anything else, you or others could be badly injured or killed if the vehicle slips off the jack. If a jack is provided with the vehicle, only use it for changing a flat tire.

If a tire goes flat, avoid further tire and wheel damage by driving slowly to a level place, well off the road, if possible. Turn on the hazard warning flashers. See *Hazard Warning Flashers* ⇨ *140*.

⚠ Warning

Changing a tire can be dangerous. The vehicle can slip off the jack and roll over or fall causing injury or death. Find a level place to change the tire. To help prevent the vehicle from moving:

1. Set the parking brake firmly.
2. Put an automatic transmission in P (Park) or a manual transmission in 1 (First) or R (Reverse).
3. Turn off the engine and do not restart while the vehicle is raised.
4. Do not allow passengers to remain in the vehicle.
5. Place wheel blocks, if equipped, on both sides of the tire at the opposite corner of the tire being changed.

When the vehicle has a flat tire (2), use the following example as a guide to assist in the placement of the wheel blocks (1), if equipped.

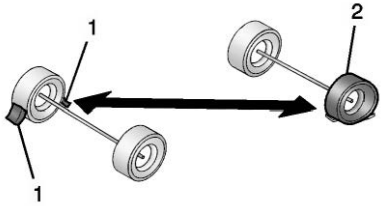

1. Wheel Block (If Equipped)
2. Flat Tire

The following information explains how to repair or change a tire.

Tire Changing

Removing the Spare Tire and Tools

The spare tire and tools are located in the storage compartment in the rear of the vehicle.

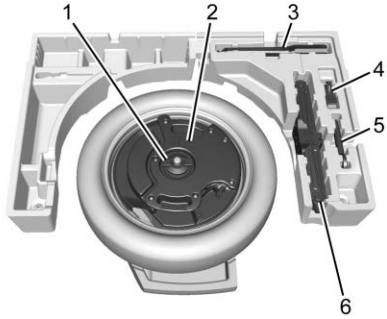

1. Center Retainer
2. Subwoofer
3. Wrench
4. Strap
5. Tow Eye (if equipped)
6. Jack

To access the spare tire and tools:

1. Open the liftgate. See *Liftgate* ⇨ *38*.
2. Lift the trim cover.
3. Remove the subwoofer assembly on top of the spare tire by turning the center retainer clockwise.
4. Remove the spare tire, jack, and tools and place them near the tire being changed.

Removing the Flat Tire and Installing the Spare Tire

1. Do a safety check before proceeding. See *If a Tire Goes Flat* ⇨ *254*.

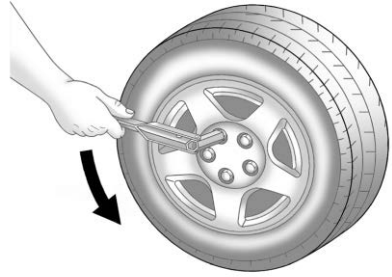

2. Turn the wheel wrench counterclockwise to loosen the wheel nuts. Do not remove them yet.

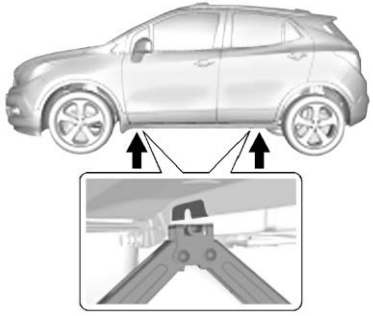

3. Place the jack at the position marked with a half circle.

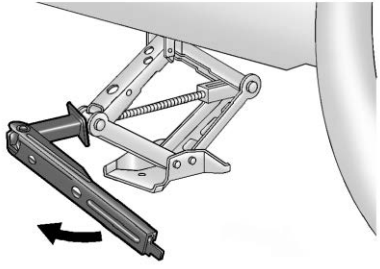

4. Place the hex tube end of the wrench over the hex head of the jack to attach it.
5. Turn the wheel wrench clockwise until the lift head is firmly contacting the proper lifting point nearest the flat tire.

⚠ Warning

Getting under a vehicle when it is lifted on a jack is dangerous. If the vehicle slips off the jack, you could be badly injured or killed. Never get under a vehicle when it is supported only by a jack.

⚠ Warning

Raising the vehicle with the jack improperly positioned can damage the vehicle and even make the vehicle fall. To help avoid personal injury and vehicle

(Continued)

Warning (Continued)

damage, be sure to fit the jack lift head into the proper location before raising the vehicle.

⚠ Warning

Lifting a vehicle and getting under it to do maintenance or repairs is dangerous without the appropriate safety equipment and training. If a jack is provided with the vehicle, it is designed only for changing a flat tire. If it is used for anything else, you or others could be badly injured or killed if the vehicle slips off the jack. If a jack is provided with the vehicle, only use it for changing a flat tire.

6. Turn the wheel wrench clockwise to raise the vehicle far enough off the ground so there is enough room for the spare tire to fit underneath the wheel well.

7. Turn the wheel nuts counterclockwise to remove them.
8. Remove the flat tire.

⚠ Warning

Rust or dirt on a wheel, or on the parts to which it is fastened, can make wheel nuts become loose after time. The wheel could come off and cause an accident. When changing a wheel, remove any rust or dirt from places where the wheel attaches to the vehicle. In an emergency, a cloth or a paper towel can be used; however, use a scraper or wire brush later to remove all rust or dirt.

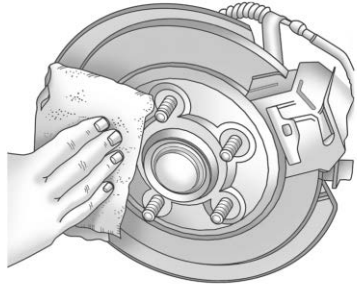

9. Remove any rust or dirt from the wheel bolts, mounting surfaces, and spare wheel.
10. Place the spare tire on the wheel-mounting surface.

⚠ Warning

Never use oil or grease on bolts or nuts because the nuts might come loose. The vehicle's wheel could fall off, causing a crash.

11. Reinstall the wheel nuts. Turn each nut clockwise, by hand, until the wheel is held against the hub.
12. Lower the vehicle by turning the wheel wrench counterclockwise. Lower the jack completely.

⚠ Warning

Wheel nuts that are improperly or incorrectly tightened can cause the wheels to become loose or come off. The wheel nuts should be tightened with a torque wrench to the proper torque specification after replacing. Follow the torque specification supplied by the aftermarket manufacturer when using accessory locking wheel nuts. See *Capacities and Specifications* ⇨ *290* for original equipment wheel nut torque specifications.

Caution

Improperly tightened wheel nuts can lead to brake pulsation and rotor damage. To avoid expensive brake repairs, evenly tighten the wheel nuts in the proper sequence and to the proper torque specification. See *Capacities and Specifications* ⇨ *290* for the wheel nut torque specification.

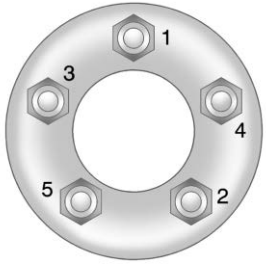

13. Tighten the wheel nuts firmly with the wheel wrench in a crisscross sequence, as shown.

Caution

Wheel covers will not fit on the vehicle's compact spare. If you try to put a wheel cover on the compact spare, the cover or the spare could be damaged.

Storing a Flat or Spare Tire and Tools

⚠ Warning

Storing a jack, a tire, or other equipment in the passenger compartment of the vehicle could cause injury. In a sudden stop or collision, loose equipment could strike someone. Store all these in the proper place.

Storing the Flat Tire and Tools

1. Return the jack and tools to their original storage location.
2. Replace the trim cover.
3. Place the flat tire, lying flat, in the rear storage compartment.
4. Attach one end of the strap to a cargo tie-down in the rear of the vehicle.

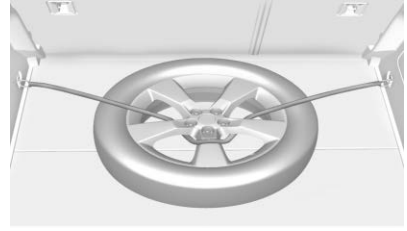

5. Route the strap through the wheel, as shown.
6. Attach the other end of the strap to the other cargo tie-down in the rear of the vehicle.
7. Tighten the strap.

Storing the Compact Spare Tire and Tools

Reverse the instructions for removing the spare tire and tools to store the spare tire.

The compact spare tire is for temporary use only. Replace the compact spare tire with a full-size tire as soon as you can. See *Compact Spare Tire* ⇨ *260*.

Compact Spare Tire

⚠ Warning

Driving with more than one compact spare tire at a time could result in loss of braking and handling. This could lead to a crash and you or others could be injured. Use only one compact spare tire at a time.

If this vehicle has a compact spare tire, it was fully inflated when new; however, it can lose air over time. Check the inflation pressure regularly. It should be 420 kPa (60 psi).

Stop as soon as possible and check that the spare tire is correctly inflated after being installed on the vehicle. The compact spare tire is designed for temporary use only. The vehicle will perform differently with the spare tire installed and it is recommended that the vehicle speed be limited to 80 km/h (50 mph). To conserve the tread of the spare tire, have the standard tire repaired or replaced as soon as convenient and return the spare tire to the storage area.

When using a compact spare tire, the AWD (if equipped), ABS, and Traction Control systems may engage until the spare tire is recognized by the vehicle, especially on slippery roads. Adjust driving to reduce possible wheel slip.

Caution

When the compact spare is installed, do not take the vehicle through an automatic car wash with guide rails. The compact spare can get caught on the rails which can damage the tire, wheel, and other parts of the vehicle.

Do not use the compact spare on other vehicles.

Do not mix the compact spare tire or wheel with other wheels or tires. They will not fit. Keep the spare tire and its wheel together.

Caution

Tire chains will not fit the compact spare. Using them can damage the vehicle and the chains. Do not use tire chains on the compact spare.

Jump Starting

Jump Starting - North America

For more information about the vehicle battery, see *Battery - North America* ⇨ *219*.

If the battery has run down, try to use another vehicle and some jumper cables to start your vehicle. Be sure to use the following steps to do it safely.

⚠ Warning

WARNING: Battery posts, terminals, and related accessories contain lead and lead compounds, chemicals known to the State of California to cause cancer and birth defects or other reproductive harm. Batteries also contain other chemicals known to the State of California to cause cancer. **WASH HANDS AFTER**

(Continued)

Warning (Continued)

HANDLING. For more information go to www.P65Warnings.ca.gov/passenger-vehicle.

See *California Proposition 65 Warning* ⇨ *199* and the back cover.

⚠ Warning

Batteries can hurt you. They can be dangerous because:

- They contain acid that can burn you.
- They contain gas that can explode or ignite.
- They contain enough electricity to burn you.

If you do not follow these steps exactly, some or all of these things can hurt you.

Caution

Ignoring these steps could result in costly damage to the vehicle that would not be covered by the vehicle warranty. Trying to start the vehicle by pushing or pulling it will not work, and it could damage the vehicle.

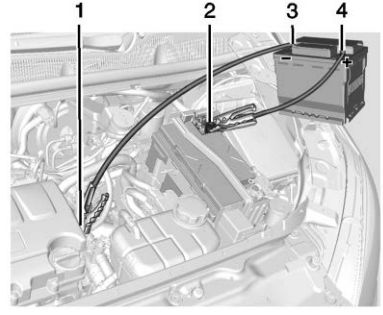

1.4L L4 Engine (LUV) Shown, 1.4L L4 Engine (LE2) Similar

1. Discharged Battery Negative Grounding Point

2. Discharged Battery Positive Terminal
3. Good Battery Negative Terminal
4. Good Battery Positive Terminal

The jump start negative grounding point (1) for the discharged battery is the engine block or an engine mounting bolt. Connect to a spot as far away from the discharged battery as possible.

The jump start positive terminal (2) on the discharged battery is in the engine compartment on the driver side of the vehicle.

The jump start negative terminal (3) and positive terminal (4) are on the battery of the vehicle providing the jump start.

The positive jump start connection for the discharged battery is under a trim cover. Open the cover to expose the terminal.

1. Check the other vehicle. It must have a 12-volt battery with a negative ground system.

Caution

If the other vehicle does not have a 12-volt system with a negative ground, both vehicles can be damaged. Only use a vehicle that has a 12-volt system with a negative ground for jump starting.

2. Position the two vehicles so that they are not touching.
3. Set the parking brake firmly and put the shift lever in P (Park) with an automatic transmission, or Neutral with a manual transmission.

Caution

If any accessories are left on or plugged in during the jump starting procedure, they could be damaged. The repairs would not be covered by the vehicle warranty. Whenever possible, turn off or unplug all accessories on either vehicle when jump starting.

4. Turn the ignition off. Turn off all lights and accessories in both vehicles, except the hazard warning flashers if needed.

⚠ Warning

An electric fan can start up even when the engine is not running and can injure you. Keep hands, clothing, and tools away from any underhood electric fan.

⚠ Warning

Using a match near a battery can cause battery gas to explode. People have been hurt doing this, and some have been blinded. Use a flashlight if you need more light.

Battery fluid contains acid that can burn you. Do not get it on you. If you accidentally get it in your eyes or on your skin, flush the place with water and get medical help immediately.

⚠ Warning

Fans or other moving engine parts can injure you badly. Keep your hands away from moving parts once the engine is running.

5. Connect one end of the red positive (+) cable to the positive (+) terminal on the discharged battery.
6. Connect the other end of the red positive (+) cable to the positive (+) terminal of the good battery.
7. Connect one end of the black negative (–) cable to the negative (–) terminal of the good battery.
8. Connect the other end of the black negative (–) cable to the negative (–) grounding point for the discharged battery.
9. Start the engine in the vehicle with the good battery and run the engine at idle speed for at least four minutes.
10. Try to start the vehicle that had the dead battery. If it will not start after a few tries, it probably needs service.

Caution

If the jumper cables are connected or removed in the wrong order, electrical shorting may occur and damage the vehicle. The repairs would not be covered by the vehicle warranty. Always connect and remove the jumper cables in the correct order, making sure that the cables do not touch each other or other metal.

Jumper Cable Removal

Reverse the sequence exactly when removing the jumper cables.

After starting the disabled vehicle and removing the jumper cables, allow it to idle for several minutes.

Towing the Vehicle

Caution

Incorrectly towing a disabled vehicle may cause damage. The damage would not be covered by the vehicle warranty.

Do not lash or hook to suspension components. Use the proper straps around the tires to secure the vehicle.

Have the vehicle towed on a flatbed car carrier or a wheel lift tow truck. If a wheel lift tow truck is used, the drive wheels cannot contact the road while the vehicle is being towed. A wheel dolly must be used to lift all drive wheels off the ground.

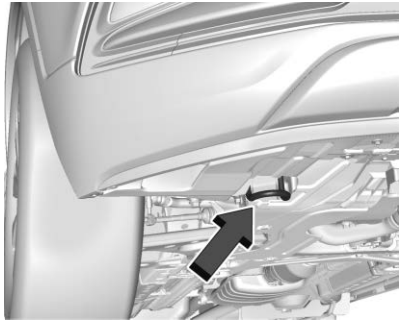

The vehicle is equipped with a specific attachment point to be used by the towing provider. This point may be used to pull the vehicle from a flat road surface onto the flat bed tow truck.

Caution
Improper use of the tow eye can cause vehicle damage. Use caution and low speeds to prevent damage to the vehicle.

If equipped, carefully open the cover by using the small notch that conceals the tow eye socket.

Install the tow eye into the socket by turning it clockwise until it stops. When the tow eye is removed, reinstall the cover with the notch in the original position.

Consult your dealer or a professional towing service if the disabled vehicle must be towed.

Recreational Vehicle Towing

Recreational vehicle towing means towing the vehicle behind another vehicle, such as behind a motor home. The two most common types of recreational vehicle towing are known as dinghy towing and dolly towing. Dinghy towing is towing the vehicle with all four wheels on the ground. Dolly towing is towing the vehicle with two wheels on the ground and two wheels up on a device known as a dolly.

Here are some important things to consider before recreational vehicle towing:

- What is the towing capacity of the towing vehicle? Be sure to read the tow vehicle manufacturer's recommendations.
- What is the distance that will be traveled? Some vehicles have restrictions on how far and how long they can tow.
- Is the proper towing equipment going to be used? See your dealer or trailering professional for additional advice and equipment recommendations.
- Is the vehicle ready to be towed? Just as preparing the vehicle for a long trip, make sure the vehicle is prepared to be towed.

Caution

Use of a shield mounted in front of the vehicle grille could restrict airflow and cause damage to the transmission. The repairs would not be covered by the vehicle warranty. If using a shield, only use one that attaches to the towing vehicle.

Dinghy Towing

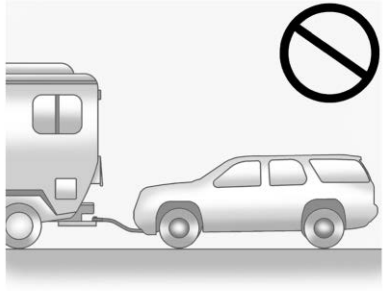

Caution

If the vehicle is towed with all four wheels on the ground, the drivetrain components could be damaged. The repairs would not be covered by the vehicle warranty. Do not tow the vehicle with all four wheels on the ground.

The vehicle was not designed to be towed with all four wheels on the ground.

Dolly Towing (All-Wheel-Drive Vehicles)

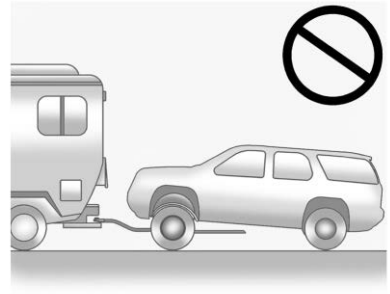

All-wheel-drive vehicles must not be towed with two wheels on the ground. To properly tow these vehicles, they should be placed on a platform trailer with all four wheels off of the ground.

Dolly Towing (Front-Wheel-Drive Vehicles Only)

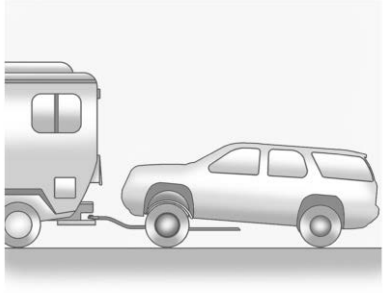

To tow a front-wheel-drive vehicle from the front with two wheels on the ground:

1. Put the front wheels on a dolly.
2. Move the shift lever to P (Park).
3. Set the parking brake.
4. Clamp the steering wheel in a straight-ahead position with a clamping device designed for towing.
5. Turn the vehicle off.
6. Secure the vehicle to the dolly.
7. Release the parking brake.

Towing the Vehicle from the Rear

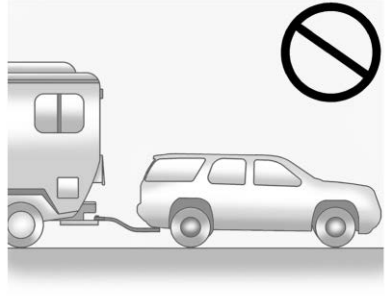

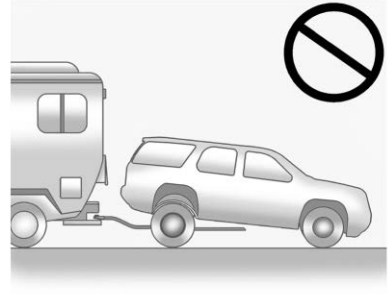

Caution

Towing the vehicle from the rear could damage it. Also, repairs would not be covered by the vehicle warranty. Never have the vehicle towed from the rear.

Do not tow the vehicle from the rear.

Appearance Care

Exterior Care

Locks

Locks are lubricated at the factory. Use a de-icing agent only when absolutely necessary, and have the locks greased after using. See *Recommended Fluids and Lubricants* ⇨ *286*.

Washing the Vehicle

To preserve the vehicle's finish, wash it often and out of direct sunlight.

Caution

Do not use petroleum-based, acidic, or abrasive cleaning agents as they can damage the vehicle's paint, metal, or plastic parts. If damage occurs, it would not be covered by the vehicle warranty. Approved cleaning products can be obtained from

(Continued)

Caution (Continued)

your dealer. Follow all manufacturer directions regarding correct product usage, necessary safety precautions, and appropriate disposal of any vehicle care product.

Caution

Avoid using high-pressure washes closer than 30 cm (12 in) to the surface of the vehicle. Use of power washers exceeding 8,274 kPa (1,200 psi) can result in damage or removal of paint and decals.

Caution

Do not power wash any component under the hood that has this symbol.

(Continued)

Caution (Continued)

This could cause damage that would not be covered by the vehicle warranty.

If using an automatic car wash, follow the car wash instructions. The windshield wiper and rear window wiper, if equipped, must be off. Remove any accessories that may be damaged or interfere with the car wash equipment.

Rinse the vehicle well, before washing and after, to remove all cleaning agents completely. If they are allowed to dry on the surface, they could stain.

Dry the finish with a soft, clean chamois or an all-cotton towel to avoid surface scratches and water spotting.

Finish Care

Application of aftermarket clearcoat sealant/wax materials is not recommended. If painted surfaces are damaged, see your dealer to

have the damage assessed and repaired. Foreign materials such as calcium chloride and other salts, ice melting agents, road oil and tar, tree sap, bird droppings, chemicals from industrial chimneys, etc., can damage the vehicle's finish if they remain on painted surfaces. Wash the vehicle as soon as possible. If necessary, use non-abrasive cleaners that are marked safe for painted surfaces to remove foreign matter.

Occasional hand waxing or mild polishing should be done to remove residue from the paint finish. See your dealer for approved cleaning products.

Do not apply waxes or polishes to uncoated plastic, vinyl, rubber, decals, simulated wood, or flat paint as damage can occur.

Caution

Machine compounding or aggressive polishing on a basecoat/clearcoat paint finish may damage it. Use only non-abrasive waxes and polishes that are made for a basecoat/clearcoat paint finish on the vehicle.

To keep the paint finish looking new, keep the vehicle garaged or covered whenever possible.

Protecting Exterior Bright Metal Moldings

Caution

Failure to clean and protect the bright metal moldings can result in a hazy white finish or pitting. This damage would not be covered by the vehicle warranty.

The bright metal moldings on the vehicle are aluminum, chrome, or stainless steel. To prevent damage always follow these cleaning instructions:

- Be sure the molding is cool to the touch before applying any cleaning solution.
- Use only approved cleaning solutions for aluminum, chrome, or stainless steel. Some cleaners are highly acidic or contain alkaline substances and can damage the moldings.
- Always dilute a concentrated cleaner according to the manufacturer’s instructions.
- Do not use cleaners that are not intended for automotive use.
- Use a nonabrasive wax on the vehicle after washing to protect and extend the molding finish.

Cleaning Exterior Lamps/ Lenses, Emblems, Decals, and Stripes

Use only lukewarm or cold water, a soft cloth, and a car washing soap to clean exterior lamps, lenses, emblems, decals, and stripes. Follow instructions under "Washing the Vehicle" previously in this section.

Lamp covers are made of plastic, and some have a UV protective coating. Do not clean or wipe them when dry.

Do not use any of the following on lamp covers:

- Abrasive or caustic agents.
- Washer fluids and other cleaning agents in higher concentrations than suggested by the manufacturer.
- Solvents, alcohols, fuels, or other harsh cleaners.
- Ice scrapers or other hard items.
- Aftermarket appearance caps or covers while the lamps are illuminated, due to excessive heat generated.

Caution

Failure to clean lamps properly can cause damage to the lamp cover that would not be covered by the vehicle warranty.

Caution

Using wax on low gloss black finish stripes can increase the gloss level and create a non-uniform finish. Clean low gloss stripes with soap and water only.

Air Intakes

Clear debris from the air intakes, between the hood and windshield, when washing the vehicle.

Windshield and Wiper Blades

Clean the outside of the windshield with glass cleaner.

Clean rubber blades using a lint-free cloth or paper towel soaked with windshield washer fluid or a mild detergent. Wash the windshield thoroughly when cleaning the blades. Bugs, road grime, sap, and a buildup of vehicle wash/wax treatments may cause wiper streaking.

Replace the wiper blades if they are worn or damaged. Damage can be caused by extreme dusty conditions, sand, salt, heat, sun, snow, and ice.

Weatherstrips

Apply weatherstrip lubricant on weatherstrips to make them last longer, seal better, and not stick or squeak. Lubricate weatherstrips at least once a year. Hot, dry climates may require more frequent application. Black marks from rubber material on painted surfaces

can be removed by rubbing with a clean cloth. See *Recommended Fluids and Lubricants* ⇨ *286*.

Tires

Use a stiff brush with tire cleaner to clean the tires.

Caution

Using petroleum-based tire dressing products on the vehicle may damage the paint finish and/or tires. When applying a tire dressing, always wipe off any overspray from all painted surfaces on the vehicle.

Wheels and Trim — Aluminum or Chrome

Use a soft, clean cloth with mild soap and water to clean the wheels. After rinsing thoroughly with clean water, dry with a soft, clean towel. A wax may then be applied.

Caution

Chrome wheels and other chrome trim may be damaged if the vehicle is not washed after driving on roads that have been sprayed with magnesium, calcium, or sodium chloride. These chlorides are used on roads for conditions such as ice and dust. Always wash the chrome with soap and water after exposure.

Caution

To avoid surface damage, do not use strong soaps, chemicals, abrasive polishes, cleaners, brushes, or cleaners that contain acid on aluminum or chrome-plated wheels. Use only approved cleaners. Also, never drive a vehicle with aluminum or chrome-plated wheels through an automatic car wash that uses

(Continued)

Caution (Continued)

silicone carbide tire cleaning brushes. Damage could occur and the repairs would not be covered by the vehicle warranty.

Brake System

Visually inspect brake lines and hoses for proper hook-up, binding, leaks, cracks, chafing, etc. Inspect disc brake pads for wear and rotors for surface condition. Inspect drum brake linings/shoes for wear or cracks. Inspect all other brake parts.

Steering, Suspension, and Chassis Components

Visually inspect steering, suspension, and chassis components for damaged, loose, or missing parts or signs of wear at least once a year.

Inspect power steering for proper attachment, connections, binding, leaks, cracks, chafing, etc.

Visually check constant velocity joint boots and axle seals for leaks.

Body Component Lubrication

Lubricate all key lock cylinders, hood hinges, liftgate hinges, and the steel fuel door hinges, unless the components are plastic. Applying silicone grease on weatherstrips with a clean cloth will make them last longer, seal better, and not stick or squeak.

Underbody Maintenance

At least twice a year, spring and fall, use plain water to flush any corrosive materials from the underbody. Take care to thoroughly clean any areas where mud and other debris can collect.

Do not directly power wash the transfer case and/or front/rear axle output seals. High pressure water can overcome the seals and contaminate the fluid. Contaminated fluid will decrease the life of the transfer case and/or axles and should be replaced.

Sheet Metal Damage

If the vehicle is damaged and requires sheet metal repair or replacement, make sure the body repair shop applies anti-corrosion material to parts repaired or replaced to restore corrosion protection.

Original manufacturer replacement parts will provide the corrosion protection while maintaining the vehicle warranty.

Finish Damage

Quickly repair minor chips and scratches with touch-up materials available from your dealer to avoid corrosion. Larger areas of finish damage can be corrected in your dealer's body and paint shop.

Chemical Paint Spotting

Airborne pollutants can fall upon and attack painted vehicle surfaces causing blotchy, ring-shaped discolorations, and small, irregular dark spots etched into the paint surface. See “Finish Care” previously in this section.

Interior Care

To prevent dirt particle abrasions, regularly clean the vehicle's interior. Immediately remove any soils. Newspapers or dark garments can transfer color to the vehicle’s interior.

Use a soft bristle brush to remove dust from knobs and crevices on the instrument cluster. Using a mild soap solution, immediately remove hand lotions, sunscreen, and insect repellent from all interior surfaces or permanent damage may result.

Use cleaners specifically designed for the surfaces being cleaned to prevent permanent damage. Apply all cleaners directly to the cleaning cloth. Do not spray cleaners on any switches or controls. Remove cleaners quickly.

Before using cleaners, read and follow all safety instructions on the label. While cleaning the interior, open the doors and windows to get proper ventilation.

To prevent damage, do not clean the interior using the following cleaners or techniques:

- Never use a razor or any other sharp object to remove soil from any interior surface.
- Never use a brush with stiff bristles.
- Never rub any surface aggressively or with too much pressure.
- Do not use laundry detergents or dishwashing soaps with degreasers. For liquid cleaners, use approximately 20 drops per 3.8 L (1 gal) of water. A concentrated soap solution will create streaks and attract dirt. Do not use solutions that contain strong or caustic soap.
- Do not heavily saturate the upholstery when cleaning.
- Do not use solvents or cleaners containing solvents.

Interior Glass

To clean, use a terry cloth fabric dampened with water. Wipe droplets left behind with a clean dry cloth. If necessary, use a commercial glass cleaner after cleaning with plain water.

Caution

To prevent scratching, never use abrasive cleaners on automotive glass. Abrasive cleaners or aggressive cleaning may damage the rear window defogger.

Cleaning the windshield with water during the first three to six months of ownership will reduce tendency to fog.

Speaker Covers

Vacuum around a speaker cover gently, so that the speaker will not be damaged. Clean spots with water and mild soap.

Coated Moldings

Coated moldings should be cleaned.

- When lightly soiled, wipe with a sponge or soft, lint-free cloth dampened with water.
- When heavily soiled, use warm soapy water.

Fabric/Carpet/Suede

Start by vacuuming the surface using a soft brush attachment. If a rotating vacuum brush attachment is being used, only use it on the floor carpet. Before cleaning, gently remove as much of the soil as possible:

- Gently blot liquids with a paper towel. Continue blotting until no more soil can be removed.
- For solid soils, remove as much as possible prior to vacuuming.

To clean:

1. Saturate a clean, lint-free colorfast cloth with water. Microfiber cloth is recommended to prevent lint transfer to the fabric or carpet.

2. Remove excess moisture by gently wringing until water does not drip from the cleaning cloth.
3. Start on the outside edge of the soil and gently rub toward the center. Fold the cleaning cloth to a clean area frequently to prevent forcing the soil in to the fabric.
4. Continue gently rubbing the soiled area until there is no longer any color transfer from the soil to the cleaning cloth.
5. If the soil is not completely removed, use a mild soap solution followed only by plain water.

If the soil is not completely removed, it may be necessary to use a commercial upholstery cleaner or spot lifter. Test a small hidden area for colorfastness before using a commercial upholstery cleaner or spot lifter. If ring formation occurs, clean the entire fabric or carpet.

After cleaning, use a paper towel to blot excess moisture.

Cleaning High Gloss Surfaces and Vehicle Information and Radio Displays

Use a microfiber cloth on high gloss surfaces or vehicle displays. First, use a soft bristle brush to remove dirt that can scratch the surface. Then gently clean by rubbing with a microfiber cloth. Never use window cleaners or solvents. Periodically hand wash the microfiber cloth separately, using mild soap. Do not use bleach or fabric softener. Rinse thoroughly and air dry before next use.

Caution

Do not attach a device with a suction cup to the display. This may cause damage and would not be covered by the vehicle warranty.

Instrument Panel, Leather, Vinyl, Other Plastic Surfaces, Low Gloss Paint Surfaces, and Natural Open Pore Wood Surfaces

Use a soft microfiber cloth dampened with water to remove dust and loose dirt. For a more thorough cleaning, use a soft microfiber cloth dampened with a mild soap solution.

Caution

Soaking or saturating leather, especially perforated leather, as well as other interior surfaces, may cause permanent damage. Wipe excess moisture from these surfaces after cleaning and allow them to dry naturally. Never use heat, steam, or spot removers. Do not use cleaners that contain silicone or wax-based products. Cleaners containing these solvents can permanently change

(Continued)

Caution (Continued)

the appearance and feel of leather or soft trim, and are not recommended.

Do not use cleaners that increase gloss, especially on the instrument panel. Reflected glare can decrease visibility through the windshield under certain conditions.

Caution

Use of air fresheners may cause permanent damage to plastics and painted surfaces. If an air freshener comes in contact with any plastic or painted surface in the vehicle, blot immediately and clean with a soft cloth dampened with a mild soap solution. Damage caused by air fresheners would not be covered by the vehicle warranty.

Cargo Cover and Convenience Net

If equipped, wash with warm water and mild detergent. Do not use chlorine bleach. Rinse with cold water, and then dry completely.

Care of Seat Belts

Keep belts clean and dry.

⚠ Warning

Do not bleach or dye seat belt webbing. It may severely weaken the webbing. In a crash, they might not be able to provide adequate protection. Clean and rinse seat belt webbing only with mild soap and lukewarm water. Allow the webbing to dry.

Floor Mats

⚠ Warning

If a floor mat is the wrong size or is not properly installed, it can interfere with the pedals. Interference with the pedals can cause unintended acceleration and/or increased stopping distance which can cause a crash and injury. Make sure the floor mat does not interfere with the pedals.

Use the following guidelines for proper floor mat usage.

- The original equipment floor mats were designed for your vehicle. If the floor mats need replacing, it is recommended that GM certified floor mats be purchased. Non-GM floor mats may not fit properly and may interfere with the accelerator or brake pedal. Always check that the floor mats do not interfere with the pedals.

- Do not use a floor mat if the vehicle is not equipped with a floor mat retainer on the driver side floor.
- Use the floor mat with the correct side up. Do not turn it over.
- Do not place anything on top of the driver side floor mat.
- Use only a single floor mat on the driver side.
- Do not place one floor mat on top of another.

The driver side floor mat is held in place by a button-type retainer.

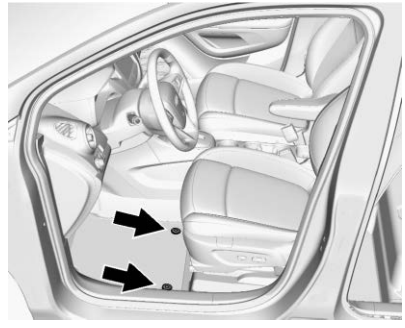

Removing and Replacing the Floor Mats

1. Pull up on the rear of the floor mat to unlock the retainers and remove.
2. Reinstall by lining up the floor mat retainer openings over the carpet retainers and snap into position.
3. Make sure the floor mat is properly secured in place. Verify the floor mat does not interfere with the pedals.

Service and Maintenance

General Information
General Information 276

Maintenance Schedule
Maintenance Schedule 278

Special Application Services
Special Application Services 283

Additional Maintenance and Care
Additional Maintenance and Care 283

Recommended Fluids, Lubricants, and Parts
Recommended Fluids and Lubricants 286
Maintenance Replacement Parts 287

Maintenance Records
Maintenance Records 288

General Information

Your vehicle is an important investment. This section describes the required maintenance for the vehicle. Follow this schedule to help protect against major repair expenses resulting from neglect or inadequate maintenance. It may also help to maintain the value of the vehicle if it is sold. It is the responsibility of the owner to have all required maintenance performed.

Your dealer has trained technicians who can perform required maintenance using genuine replacement parts. They have up-to-date tools and equipment for fast and accurate diagnostics. Many dealers have extended evening and Saturday hours, courtesy transportation, and online scheduling to assist with service needs.

Your dealer recognizes the importance of providing competitively priced maintenance and repair services. With trained technicians, the dealer is the place for routine maintenance such as oil changes and tire rotations and additional maintenance items like tires, brakes, batteries, and wiper blades.

Caution

Damage caused by improper maintenance can lead to costly repairs and may not be covered by the vehicle warranty. Maintenance intervals, checks, inspections, recommended fluids, and lubricants are important to keep the vehicle in good working condition.

Do not have chemical flushes that are not approved by GM performed on the vehicle. The use of flushes, solvents, cleaners, or lubricants that are not approved by GM could damage the vehicle, requiring expensive repairs that are not covered by the vehicle warranty.

The Tire Rotation and Required Services are the responsibility of the vehicle owner. It is recommended to have your dealer perform these services every 12 000 km/7,500 mi. Proper vehicle maintenance helps to keep the vehicle in good working condition, improves fuel economy, and reduces vehicle emissions.

Because of the way people use vehicles, maintenance needs vary. There may need to be more frequent checks and services. The Additional Required Services - Normal are for vehicles that:

- Carry passengers and cargo within recommended limits on the Tire and Loading Information label. See *Vehicle Load Limits* ⇨ *162*.
- Are driven on reasonable road surfaces within legal driving limits.
- Use the recommended fuel. See *Fuel* ⇨ *193*.

Refer to the information in the Maintenance Schedule Additional Required Services - Normal chart.

The Additional Required Services - Severe are for vehicles that are:

- Mainly driven in heavy city traffic in hot weather
- Mainly driven in hilly or mountainous terrain
- Frequently towing a trailer
- Used for high speed or competitive driving
- Used for taxi, police, or delivery service

Refer to the information in the Maintenance Schedule Additional Required Services - Severe chart.

⚠ Warning

Performing maintenance work can be dangerous and can cause serious injury. Perform maintenance work only if the required information, proper tools, and equipment are available.
If they are not, see your dealer to

(Continued)

Warning (Continued)

have a trained technician do the work. See *Doing Your Own Service Work* ⇨ *200*.

Maintenance Schedule

Owner Checks and Services

At Each Fuel Stop

- Check the engine oil level. See *Engine Oil* ⇨ *206*.

Once a Month

- Check the tire inflation pressures. See *Tire Pressure* ⇨ *242*.
- Inspect the tires for wear. See *Tire Inspection* ⇨ *248*.
- Check the windshield washer fluid level. See *Washer Fluid* ⇨ *216*.

Engine Oil Change

When the CHANGE ENGINE OIL SOON DIC message displays, have the engine oil and filter changed within the next 1 000 km/600 mi. If driven under the best conditions, the engine oil life system may not indicate the need for vehicle service for up to a year. The engine oil and filter must be changed at least once a year and the oil life system must be reset. Your trained dealer technician can perform this work. If the engine oil life system is reset accidentally, service the vehicle within 5 000 km/3,000 mi since the last service. Reset the oil life system when the oil is changed. See *Engine Oil Life System* ⇨ *209*.

Tire Rotation and Required Services Every 12 000 km/ 7,500 mi

Rotate the tires, if recommended for the vehicle, and perform the following services. See *Tire Rotation* ⇨ *248*.

- Check engine oil level and oil life percentage. If needed, change engine oil and filter, and reset oil life system. See *Engine Oil* ⇨ *206* and *Engine Oil Life System* ⇨ *209*.
- Check engine coolant level. See *Cooling System* ⇨ *211*.
- Check engine cooling system hoses and connections.
- Check windshield washer fluid level. See *Washer Fluid* ⇨ *216*.
- Visually inspect windshield wiper blades for wear, cracking or contamination. See *Exterior Care* ⇨ *267*. Replace worn or damaged wiper blades. See *Wiper Blade Replacement* ⇨ *221*.
- Check tire inflation pressures. See *Tire Pressure* ⇨ *242*.
- Inspect tire wear. See *Tire Inspection* ⇨ *248*.
- Visually check for fluid leaks.
- Inspect engine air cleaner filter. See *Engine Air Cleaner/Filter* ⇨ *210*.
- Inspect brake system. See *Exterior Care* ⇨ *267*.
- Visually inspect steering, suspension, and chassis components for damaged, loose, or missing parts or signs of wear. See *Exterior Care* ⇨ *267*.
- Check restraint system components. See *Safety System Check* ⇨ *64*.

- Visually inspect fuel system for damage or leaks.
- Visually inspect exhaust system and nearby heat shields for loose or damaged parts.
- Lubricate body components. See *Exterior Care* ⇨ *267*.
- Check starter switch. See *Starter Switch Check* ⇨ *220*.
- Check automatic transmission shift lock control function. See *Automatic Transmission Shift Lock Control Function Check* ⇨ *220*.
- Check parking brake and automatic transmission park mechanism. See *Park Brake and P (Park) Mechanism Check* ⇨ *220*.
- Check accelerator pedal for damage, high effort, or binding. Replace if needed.
- Visually inspect gas strut for signs of wear, cracks, or other damage. Check the hold open ability of the strut. If the hold open is low, service the gas strut. See *Gas Strut(s)* ⇨ *222*.
- Inspect sunroof track and seal, if equipped. See *Sunroof* ⇨ *45*.

Maintenance Schedule Additional Required Services - Normal	12 000 km/7,500 mi	24 000 km/15,000 mi	36 000 km/22,500 mi	48 000 km/30,000 mi	60 000 km/37,500 mi	72 000 km/45,000 mi	84 000 km/52,500 mi	96 000 km/60,000 mi	108 000 km/67,500 mi	120 000 km/75,000 mi	132 000 km/82,500 mi	144 000 km/90,000 mi	156 000 km/97,500 mi	168 000 km/105,000 mi	180 000 km/112,500 mi	192 000 km/120,000 mi	204 000 km/127,500 mi	216 000 km/135,000 mi	228 000 km/142,500 mi	240 000 km/150,000 mi
Rotate tires and perform Required Services. Check engine oil level and oil life percentage. Change engine oil and filter, if needed.	✓	✓	✓	✓	✓	✓	✓	✓	✓	✓	✓	✓	✓	✓	✓	✓	✓	✓	✓	✓
Replace passenger compartment air filter. (1)			✓			✓			✓			✓			✓			✓		
Inspect evaporative control system. (2)						✓						✓						✓		
Replace engine air cleaner filter. (3)						✓						✓						✓		
Replace spark plugs. Inspect spark plug wires.								✓								✓				
Drain and fill engine cooling system. (4)																				✓
Visually inspect accessory drive belts. (5)																				✓
Replace brake fluid. (6)																				

Footnotes — Maintenance Schedule Additional Required Services - Normal

(1) Or every two years, whichever comes first. More frequent passenger compartment air filter replacement may be needed if driving in areas with heavy traffic, poor air quality, high dust levels, or environmental allergens. Passenger compartment air filter replacement may also be needed if there is reduced airflow, window fogging, or odors. Your GM dealer can help determine when to replace the filter.

(2) Visually check all fuel and vapor lines and hoses for proper attachment, connection, routing, and condition.

(3) Or every four years, whichever comes first. If driving in dusty conditions, inspect the filter at each oil change or more often as needed.

(4) Or every five years, whichever comes first. See *Cooling System* ⇨ *211*.

(5) Or every 10 years, whichever comes first. Inspect for fraying, excessive cracking, or damage; replace, if needed.

(6) Replace brake fluid every three years. See *Brake Fluid* ⇨ *218*.

Maintenance Schedule Additional Required Services - Severe	12 000 km/7,500 mi	24 000 km/15,000 mi	36 000 km/22,500 mi	48 000 km/30,000 mi	60 000 km/37,500 mi	72 000 km/45,000 mi	84 000 km/52,500 mi	96 000 km/60,000 mi	108 000 km/67,500 mi	120 000 km/75,000 mi	132 000 km/82,500 mi	144 000 km/90,000 mi	156 000 km/97,500 mi	168 000 km/105,000 mi	180 000 km/112,500 mi	192 000 km/120,000 mi	204 000 km/127,500 mi	216 000 km/135,000 mi	228 000 km/142,500 mi	240 000 km/150,000 mi
Rotate tires and perform Required Services. Check engine oil level and oil life percentage. Change engine oil and filter, if needed.	✓	✓	✓	✓	✓	✓	✓	✓	✓	✓	✓	✓	✓	✓	✓	✓	✓	✓	✓	✓
Replace passenger compartment air filter. (1)			✓			✓			✓			✓			✓			✓		
Inspect evaporative control system. (2)						✓						✓						✓		
Replace engine air cleaner filter. (3)		✓		✓		✓		✓		✓		✓		✓		✓		✓		✓
Change automatic transmission fluid.						✓						✓						✓		
Replace spark plugs. Inspect spark plug wires.								✓								✓				
Drain and fill engine cooling system. (4)																				✓
Visually inspect accessory drive belts. (5)																				✓
Replace brake fluid. (6)																				

Footnotes — Maintenance Schedule Additional Required Services - Severe

(1) Or every two years, whichever comes first. More frequent passenger compartment air filter replacement may be needed if driving in areas with heavy traffic, poor air quality, high dust levels, or environmental allergens. Passenger compartment air filter replacement may also be needed if there is reduced airflow, window fogging, or odors. Your GM dealer can help determine when to replace the filter.

(2) Visually check all fuel and vapor lines and hoses for proper attachment, connection, routing, and condition.

(3) Or every four years, whichever comes first. If driving in dusty conditions, inspect the filter at each oil change or more often as needed.

(4) Or every five years, whichever comes first. See *Cooling System* ⇨ *211*.

(5) Or every 10 years, whichever comes first. Inspect for fraying, excessive cracking, or damage; replace, if needed.

(6) Replace brake fluid every three years. See *Brake Fluid* ⇨ *218*.

Special Application Services

- Severe Commercial Use Vehicles Only: Lubricate chassis components every oil change.
- Have underbody flushing service performed. See "Underbody Maintenance" in *Exterior Care* ⇨ *267*.

Additional Maintenance and Care

Your vehicle is an important investment and caring for it properly may help to avoid future costly repairs. To maintain vehicle performance, additional maintenance services may be required.

It is recommended that your dealer perform these services — their trained dealer technicians know your vehicle best. Your dealer can also perform a thorough assessment with a multi-point inspection to recommend when your vehicle may need attention.

The following list is intended to explain the services and conditions to look for that may indicate services are required.

Battery

The 12-volt battery supplies power to start the engine and operate any additional electrical accessories.

- To avoid break-down or failure to start the vehicle, maintain a battery with full cranking power.
- Trained dealer technicians have the diagnostic equipment to test the battery and ensure that the connections and cables are corrosion-free.

Belts

- Belts may need replacing if they squeak or show signs of cracking or splitting.
- Trained dealer technicians have access to tools and equipment to inspect the belts and recommend adjustment or replacement when necessary.

Brakes

Brakes stop the vehicle and are crucial to safe driving.

- Signs of brake wear may include chirping, grinding, or squealing noises, or difficulty stopping.
- Trained dealer technicians have access to tools and equipment to inspect the brakes and recommend quality parts engineered for the vehicle.

Fluids

Proper fluid levels and approved fluids protect the vehicle's systems and components. See *Recommended Fluids and Lubricants* ⇨ *286* for GM approved fluids.

- Engine oil and windshield washer fluid levels should be checked at every fuel fill.
- Instrument cluster lights may come on to indicate that fluids may be low and need to be filled.

Hoses

Hoses transport fluids and should be regularly inspected to ensure that there are no cracks or leaks. With a multi-point inspection, your dealer can inspect the hoses and advise if replacement is needed.

Lamps

Properly working headlamps, taillamps, and brake lamps are important to see and be seen on the road.

- Signs that the headlamps need attention include dimming, failure to light, cracking, or damage. The brake lamps need to be checked periodically to ensure that they light when braking.
- With a multi-point inspection, your dealer can check the lamps and note any concerns.

Shocks and Struts

Shocks and struts help aid in control for a smoother ride.

- Signs of wear may include steering wheel vibration, bounce/sway while braking, longer stopping distance, or uneven tire wear.
- As part of the multi-point inspection, trained dealer technicians can visually inspect the shocks and struts for signs

of leaking, blown seals, or damage, and can advise when service is needed.

Tires

Tires need to be properly inflated, rotated, and balanced. Maintaining the tires can save money and fuel, and can reduce the risk of tire failure.

- Signs that the tires need to be replaced include three or more visible treadwear indicators; cord or fabric showing through the rubber; cracks or cuts in the tread or sidewall; or a bulge or split in the tire.
- Trained dealer technicians can inspect and recommend the right tires. Your dealer can also provide tire/wheel balancing services to ensure smooth vehicle operation at all speeds. Your dealer sells and services name brand tires.

Vehicle Care

To help keep the vehicle looking like new, vehicle care products are available from your dealer. For information on how to clean and protect the vehicle's interior and exterior, see *Interior Care* ⇨ *271* and *Exterior Care* ⇨ *267*.

Wheel Alignment

Wheel alignment is critical for ensuring that the tires deliver optimal wear and performance.

- Signs that the alignment may need to be adjusted include pulling, improper vehicle handling, or unusual tire wear.
- Your dealer has the required equipment to ensure proper wheel alignment.

Windshield

For safety, appearance, and the best viewing, keep the windshield clean and clear.

- Signs of damage include scratches, cracks, and chips.
- Trained dealer technicians can inspect the windshield and recommend proper replacement if needed.

Wiper Blades

Wiper blades need to be cleaned and kept in good condition to provide a clear view.

- Signs of wear include streaking, skipping across the windshield, and worn or split rubber.
- Trained dealer technicians can check the wiper blades and replace them when needed.

Recommended Fluids, Lubricants, and Parts

Recommended Fluids and Lubricants

Usage	Fluid/Lubricant
Automatic Transmission	DEXRON-VI Automatic Transmission Fluid.
Engine Coolant	50/50 mixture of clean, drinkable water and use only DEX-COOL Coolant. See *Cooling System* ⇨ *211*.
Engine Oil	Engine oil meeting the dexos1 specification of the proper SAE viscosity grade. ACDelco dexos1 full synthetic is recommended. See *Engine Oil* ⇨ *206*.
Hood Latch Assembly, Secondary Latch, Pivots, Spring Anchor, and Release Pawl	Lubriplate Lubricant Aerosol (GM Part No. 89021668, in Canada 89021674) or lubricant meeting requirements of NLGI #2, Category LB or GC-LB.
Hydraulic Brake System	DOT 4 Hydraulic Brake Fluid (GM Part No. 19299570, in Canada 19299571).
Key Lock Cylinders, Hood and Door Hinges	Multi-Purpose Lubricant, Superlube (GM Part No. 12346241, in Canada 10953474).
Weatherstrip Conditioning	Weatherstrip Lubricant (GM Part No. 3634770, in Canada 10953518) or equivalent.
Windshield Washer	Automotive windshield washer fluid that meets regional freeze protection requirements.

Maintenance Replacement Parts

Replacement parts identified below by name, part number, or specification can be obtained from your dealer.

Maintenance Replacement Parts

Part	GM Part Number	ACDelco Part Number
Engine Air Cleaner/Filter	95021102	A3184C
Engine Oil Filter		
1.4L L4 Engine (LUV)	55594651	PF2257G
1.4L L4 Engine (LE2)	12640445	PF64
Passenger Compartment Air Filter	13271190	CF181
Spark Plugs		
1.4L L4 Engine (LUV)	55585517	41-121
1.4L L4 Engine (LE2)	12673527	41-153
Wiper Blades		
Driver Side – 65.0 cm (25.6 in)	94531969	—
Passenger Side – 38.0 cm (15.0 in)	95915127	—
Rear – 26.5 cm (10.4 in)	95915137	—

Maintenance Records

After the scheduled services are performed, record the date, odometer reading, who performed the service, and the type of services performed in the boxes provided. Retain all maintenance receipts.

Date	Odometer Reading	Serviced By	Services Performed

Technical Data

Vehicle Identification
Vehicle Identification Number (VIN) 289
Service Parts Identification Label 289

Vehicle Data
Capacities and Specifications 290
Engine Drive Belt Routing 291

Vehicle Identification

Vehicle Identification Number (VIN)

This legal identifier is in the front corner of the instrument panel, on the driver side of the vehicle. It can be seen through the windshield from outside. The Vehicle Identification Number (VIN) also appears on the Vehicle Certification and Service Parts labels and certificates of title and registration.

Engine Identification

The eighth character in the VIN is the engine code. This code identifies the vehicle's engine, specifications, and replacement parts. See “Engine Specifications” under *Capacities and Specifications* ⇨ *290* for the vehicle's engine code.

Service Parts Identification Label

There may be a label on the inside of the glove box that contains the following information:

- Vehicle Identification Number (VIN).
- Model designation.
- Paint information.
- Production options and special equipment.

If there is no label, there is a barcode on the certification label on the center (B) pillar to scan for this same information.

Vehicle Data

Capacities and Specifications

The following approximate capacities are given in metric and English conversions. See *Recommended Fluids and Lubricants* ⇨ *286* for more information.

Application	Capacities	
	Metric	English
Air Conditioning Refrigerant	For the air conditioning system refrigerant type and charge amount, see the refrigerant label under the hood. See your dealer for more information.	
Cooling System	7.3 L	7.7 qt
Engine Oil with Filter	4.0 L	4.2 qt
Fuel Tank	53 L	14 gal
Wheel Nut Torque	140 N•m	100 lb ft
Transfer Case	0.35 L	0.36 qt
All capacities are approximate. When adding, be sure to fill to the approximate level, as recommended in this manual. Recheck fluid level after filling.		

Engine Specifications

Engine	VIN Code	Transmission	Spark Plug Gap
1.4L L4 (LUV)	B	Automatic	0.60–0.70 mm (0.024–0.028 in)
1.4L L4 (LE2)	M	Automatic	0.60–0.70 mm (0.024–0.028 in)

Engine Drive Belt Routing

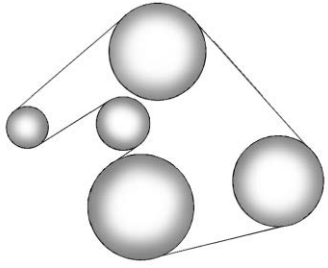

1.4L L4 Engine (LUV)

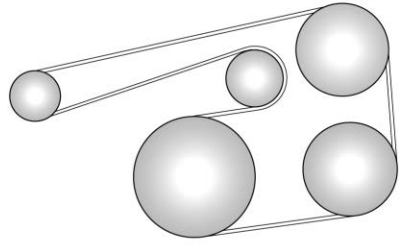

1.4L L4 Engine (LE2)

Customer Information

Customer Information
Customer Satisfaction Procedure 292
Customer Assistance Offices 294
Customer Assistance for Text Telephone (TTY) Users 295
Online Owner Center 295
GM Mobility Reimbursement Program 296
Roadside Assistance Program 296
Scheduling Service Appointments 298
Courtesy Transportation Program 298
Collision Damage Repair 299
Service Publications Ordering Information 301
Radio Frequency Statement 302

Reporting Safety Defects
Reporting Safety Defects to the United States Government 302
Reporting Safety Defects to the Canadian Government 303
Reporting Safety Defects to General Motors 303

Vehicle Data Recording and Privacy
Vehicle Data Recording and Privacy 304
Event Data Recorders 304
OnStar 305
Infotainment System 305

Customer Information

Customer Satisfaction Procedure

Your satisfaction and goodwill are important to your dealer and to Buick. Normally, any concerns with the sales transaction or the operation of the vehicle will be resolved by your dealer's sales or service departments. Sometimes, however, despite the best intentions of all concerned, misunderstandings can occur. If your concern has not been resolved to your satisfaction, the following steps should be taken:

STEP ONE : Discuss your concern with a member of dealership management. Normally, concerns can be quickly resolved at that level. If the matter has already been reviewed with the sales, service, or parts manager, contact the owner of your dealership or the general manager.

STEP TWO : If after contacting a member of dealership management, it appears your concern cannot be

resolved by your dealership without further help, in the U.S., call 1-800-521-7300. In Canada, contact General Motors of Canada Customer Care Centre at 1-800-263-3777 (English) or 1-800-263-7854 (French).

We encourage you to call the toll-free number in order to give the inquiry prompt attention. Have the following information available to give the Customer Assistance representative:

- Vehicle Identification Number (VIN). This is available from the vehicle registration or title, or the plate at the top left of the instrument panel and visible through the windshield.
- Dealership name and location.
- Vehicle delivery date and present mileage.

When contacting Buick, remember that your concern will likely be resolved at a dealer's facility. That is why we suggest following Step One first.

STEP THREE — U.S. Owners : Both General Motors and your dealer are committed to making sure you are completely satisfied with the new vehicle. However, if you continue to remain unsatisfied after following the procedure outlined in Steps One and Two, you can file with the Better Business Bureau (BBB) Auto Line® Program to enforce your rights.

The BBB Auto Line Program is an out-of-court program administered by the Council of Better Business Bureaus to settle automotive disputes regarding vehicle repairs or the interpretation of the New Vehicle Limited Warranty. Although you may be required to resort to this informal dispute resolution program prior to filing a court action, use of the program is free of charge and your case will generally be heard within 40 days. If you do not agree with the decision given in your case, you may reject it and proceed with any other venue for relief available to you.

You may contact the BBB Auto Line Program using the toll-free telephone number or write them at the following address:

BBB Auto Line Program
Council of Better Business Bureaus, Inc.
3033 Wilson Boulevard
Suite 600
Arlington, VA 22201

Telephone: 1-800-955-5100
http://www.bbb.org/council/programs-services/dispute-handling-and-resolution/bbb-auto-line

This program is available in all 50 states and the District of Columbia. Eligibility is limited by vehicle age, mileage, and other factors. General Motors reserves the right to change eligibility limitations and/or discontinue its participation in this program.

STEP THREE — Canadian Owners : In the event that you do not feel your concerns have been addressed after following the procedure outlined in Steps One

and Two, General Motors of Canada Company wants you to be aware of its participation in a no-charge Mediation/Arbitration program. General Motors of Canada Company has committed to binding arbitration of owner disputes involving factory-related vehicle service claims. The program provides for the review of the facts involved by an impartial third party arbiter, and may include an informal hearing before the arbiter. The program is designed so that the entire dispute settlement process, from the time you file your complaint to the final decision, should be completed in about 70 days. We believe our impartial program offers advantages over courts in most jurisdictions because it is informal, quick, and free of charge.

For further information concerning eligibility in the Canadian Motor Vehicle Arbitration Plan (CAMVAP), call toll-free 1-800-207-0685, or call the General Motors Customer Care Centre, 1-800-263-3777 (English), 1-800-263-7854 (French), or write to:

Mediation/Arbitration Program
c/o Customer Care Centre
General Motors of Canada Company
Mail Code: CA1-163-005
1908 Colonel Sam Drive
Oshawa, Ontario L1H 8P7

The inquiry should be accompanied by the Vehicle Identification Number (VIN).

Customer Assistance Offices

Buick encourages customers to call the toll-free number for assistance. However, if a customer wishes to write or e-mail Buick, the letter should be addressed to:

United States and Puerto Rico

Buick Customer Assistance Center
P.O. Box 33136
Detroit, MI 48232-5136
www.Buick.com

1-800-521-7300
1-800-832-8425 (For Text Telephone devices (TTYs))
Roadside Assistance:
1-800-252-1112

From U.S. Virgin Islands:

1-800-496-9994

Canada

General Motors of Canada Company
Customer Care Centre, Mail Code: CA1-163-005
1908 Colonel Sam Drive
Oshawa, Ontario L1H 8P7
www.gm.ca

1-800-263-3777 (English)
1-800-263-7854 (French)
1-800-263-3830 (For Text Telephone devices (TTYs))
Roadside Assistance:
1-800-268-6800

All Overseas Locations

Please contact the local General Motors Business Unit.

Customer Assistance for Text Telephone (TTY) Users

To assist customers who are deaf, hard of hearing, or speech-impaired and who use Text Telephones (TTYs), Buick has TTY equipment available at its Customer Assistance Center. Any TTY user can communicate with Buick by dialing: 1-800-832-8425. TTY users in Canada can dial 1-800-263-3830.

Online Owner Center

Online Owner Experience (U.S.) my.buick.com

The Buick online owner experience allows interaction with Buick and keeps important vehicle-specific information in one place.

Membership Benefits

: Download owner's manuals and view vehicle-specific how-to videos.

: View maintenance schedules, alerts, and OnStar onboard vehicle diagnostic information. Schedule service appointments.

: View and print dealer-recorded service records and self-recorded service records.

: Select a dealer and view locations, maps, phone numbers, and hours.

: Track your vehicle's warranty information.

: View active recalls by Vehicle Identification Number (VIN). See *Vehicle Identification Number (VIN)* ⇨ *289*.

: View GM Card, SiriusXM Satellite radio (if equipped), and OnStar account information.

: Chat with online help representatives.

See my.buick.com to register your vehicle.

Buick Owner Centre (Canada) buickowner.ca

Visit the Buick Owner Centre:

- Chat live with online help representatives.
- Use the Vehicle Tools section.
- Access third party enthusiast sites and social media networks.
- Locate owner resources such as lease-end, financing, and warranty information.
- Retrieve your favorite articles, quizzes, tips, and multimedia galleries organized into the Featured Articles and Auto Care Sections.
- Download the owner's manual for your vehicle, quickly and easily.
- Find the Buick-recommended maintenance services for your vehicle.

GM Mobility Reimbursement Program

GENERAL MOTORS MOBILITY

This program is available to qualified applicants for cost reimbursement, up to certain limits, of eligible aftermarket adaptive equipment required for the vehicle, such as hand controls or a wheelchair/scooter lift for the vehicle.

To learn about the GM Mobility program, see www.gmmobility.com or call the GM Mobility Assistance Center at 1-800-323-9935. Text Telephone (TTY) users, call 1-800-833-9935.

General Motors of Canada also has a Mobility program. See www.gm.ca or call 1-800-GM-DRIVE (800-463-7483) for details. TTY users call 1-800-263-3830.

Roadside Assistance Program

For U.S.-purchased vehicles, call 1-800-252-1112; (Text Telephone (TTY): 1-888-889-2438).

For Canadian-purchased vehicles, call 1-800-268-6800.

Service is available 24 hours a day, 365 days a year.

Calling for Assistance

When calling Roadside Assistance, have the following information ready:

- Your name, home address, and home telephone number
- Telephone number of your location
- Location of the vehicle
- Model, year, color, and license plate number of the vehicle
- Odometer reading, Vehicle Identification Number (VIN), and delivery date of the vehicle
- Description of the problem

Coverage

Services are provided for the duration of the vehicle's powertrain warranty.

In the U.S., anyone driving the vehicle is covered. In Canada, a person driving the vehicle without permission from the owner is not covered.

Roadside Assistance is not a part of the New Vehicle Limited Warranty. General Motors North America and Buick reserve the right to make any changes or discontinue the Roadside Assistance program at any time without notification.

General Motors North America and Buick reserve the right to limit services or payment to an owner or driver if they decide the claims are made too often, or the same type of claim is made many times.

Services Provided

- **Emergency Fuel Delivery:** Delivery of enough fuel for the vehicle to get to the nearest service station.

- **Lock-Out Service:** Service to unlock the vehicle if you are locked out. A remote unlock may be available if you have OnStar. For security reasons, the driver must present identification before this service is given.
- **Emergency Tow from a Public Road or Highway:** Tow to the nearest Buick dealer for warranty service, or if the vehicle was in a crash and cannot be driven. Assistance is not given when the vehicle is stuck in sand, mud, or snow.
- **Flat Tire Change:** Service to change a flat tire with the spare tire. The spare tire, if equipped, must be in good condition and properly inflated. It is the owner's responsibility for the repair or replacement of the tire if it is not covered by the warranty.
- **Battery Jump Start:** Service to jump start a dead battery.
- **Trip Interruption Benefits and Assistance:** If your trip is interrupted due to a warranty event, incidental expenses may be reimbursed within the Powertrain warranty period. Items considered are reasonable and customary hotel, meals, rental car, or a vehicle being delivered back to the customer, up to 500 miles.

Services Not Included in Roadside Assistance

- Impound towing caused by violation of any laws.
- Legal fines.
- Mounting, dismounting, or changing of snow tires, chains, or other traction devices.

Service is not provided if a vehicle is in an area that is not accessible to the service vehicle or is not a regularly traveled or maintained public road, which includes ice and winter roads. Off-road use is not covered.

Services Specific to Canadian-Purchased Vehicles

- **Fuel Delivery:** Reimbursement is up to 7 liters. Diesel fuel delivery may be restricted. Propane and other fuels are not provided through this service.
- **Lock-Out Service:** Vehicle registration is required.
- **Trip Interruption Benefits and Assistance:** Must be over 150 km from where your trip was started to qualify. Pre-authorization, original detailed receipts, and a copy of the repair orders are required. Once authorization has been received, the Roadside Assistance advisor will help you make arrangements and explain how to receive payment.
- **Alternative Service:** If assistance cannot be provided right away, the Roadside Assistance advisor may give permission to get local emergency road service. You will receive payment, up to $100,

after sending the original receipt to Roadside Assistance. Mechanical failures may be covered, however any cost for parts and labor for repairs not covered by the warranty are the owner responsibility.

Scheduling Service Appointments

When the vehicle requires warranty service, contact your dealer and request an appointment. By scheduling a service appointment and advising the service consultant of your transportation needs, your dealer can help minimize your inconvenience.

If the vehicle cannot be scheduled into the service department immediately, keep driving it until it can be scheduled for service, unless, of course, the problem is safety related. If it is, please call your dealership, let them know this, and ask for instructions.

If your dealer requests you to bring the vehicle for service, you are urged to do so as early in the work day as possible to allow for same-day repair.

Courtesy Transportation Program

To enhance your ownership experience, we and our participating dealers are proud to offer Courtesy Transportation, a customer support program for vehicles with the Bumper-to-Bumper (Base Warranty Coverage period in Canada), extended powertrain, and/or hybrid-specific warranties in both the U.S. and Canada.

Several Courtesy Transportation options are available to assist in reducing inconvenience when warranty repairs are required.

Courtesy Transportation is not a part of the New Vehicle Limited Warranty. A separate booklet entitled “Limited Warranty and Owner Assistance Information” furnished with each new vehicle provides detailed warranty coverage information.

Transportation Options

Warranty service can generally be completed while you wait. However, if you are unable to do so, your dealer may offer the following transportation options:

Shuttle Service

This includes one-way or round-trip shuttle service within reasonable time and distance parameters of your dealer's area.

Public Transportation or Fuel Reimbursement

If overnight warranty repairs are needed, and public transportation is used, the expense must be supported by original receipts and within the maximum amount allowed by GM for shuttle service. If U.S. customers arrange their own transportation, limited reimbursement for reasonable fuel expenses may be available. Claim amounts should reflect actual costs

and be supported by original receipts. See your dealer for information.

Courtesy Rental Vehicle

For an overnight warranty repair, the dealer may provide an available courtesy rental vehicle or provide for reimbursement of a rental vehicle. Reimbursement is limited and must be supported by original receipts as well as a signed and completed rental agreement and meet state/provincial, local, and rental vehicle provider requirements. Requirements vary and may include minimum age requirements, insurance coverage, credit card, etc. Additional fees such as fuel usage charges, taxes, levies, usage fees, excessive mileage, or rental usage beyond the completion of the repair are also your responsibility.

It may not be possible to provide a like vehicle as a courtesy rental.

Additional Program Information

All program options, such as shuttle service, may not be available at every dealer. Contact your dealer for specific availability.

General Motors reserves the right to unilaterally modify, change, or discontinue Courtesy Transportation at any time and to resolve all questions of claim eligibility pursuant to the terms and conditions described herein at its sole discretion.

Collision Damage Repair

If the vehicle is involved in a collision and it is damaged, have the damage repaired by a qualified technician using the proper equipment and quality replacement parts. Poorly performed collision repairs diminish the vehicle resale value, and safety performance can be compromised in subsequent collisions.

Collision Parts

Genuine GM Collision parts are new parts made with the same materials and construction methods as the parts with which the vehicle was originally built. Genuine GM Collision parts are the best choice to ensure that the vehicle's designed appearance, durability, and safety are preserved. The use of Genuine GM parts can help maintain the GM New Vehicle Limited Warranty.

Recycled original equipment parts may also be used for repair. These parts are typically removed from vehicles that were total losses in prior crashes. In most cases, the parts being recycled are from undamaged sections of the vehicle. A recycled original equipment GM part may be an acceptable choice to maintain the vehicle's originally designed appearance and safety performance; however, the history of these parts is not known. Such parts are not covered by the GM New Vehicle Limited Warranty, and any related failures are not covered by that warranty.

Aftermarket collision parts are also available. These are made by companies other than GM and may not have been tested for the vehicle. As a result, these parts may fit poorly, exhibit premature durability/corrosion problems, and may not perform properly in subsequent collisions. Aftermarket parts are not covered by the GM New Vehicle Limited Warranty, and any vehicle failure related to such parts is not covered by that warranty.

Repair Facility

GM also recommends that you choose a collision repair facility that meets your needs before you ever need collision repairs. Your dealer may have a collision repair center with GM-trained technicians and state-of-the-art equipment, or be able to recommend a collision repair center that has GM-trained technicians and comparable equipment.

Insuring the Vehicle

Protect your investment in the GM vehicle with comprehensive and collision insurance coverage. There are significant differences in the quality of coverage afforded by various insurance policy terms. Many insurance policies provide reduced protection to the GM vehicle by limiting compensation for damage repairs through the use of aftermarket collision parts. Some insurance companies will not specify aftermarket collision parts. When purchasing insurance, we recommend that you ensure that the vehicle will be repaired with GM original equipment collision parts. If such insurance coverage is not available from your current insurance carrier, consider switching to another insurance carrier.

If the vehicle is leased, the leasing company may require you to have insurance that ensures repairs with Genuine GM Original Equipment Manufacturer (OEM) parts or Genuine Manufacturer replacement parts. Read the lease carefully, as you may be charged at the end of the lease for poor quality repairs.

If a Crash Occurs

If there has been an injury, call emergency services for help. Do not leave the scene of a crash until all matters have been taken care of. Move the vehicle only if its position puts you in danger, or you are instructed to move it by a police officer.

Give only the necessary information to police and other parties involved in the crash.

For emergency towing see *Roadside Assistance Program* ⇨ *296*.

Gather the following information:

- Driver name, address, and telephone number
- Driver license number
- Owner name, address, and telephone number
- Vehicle license plate number

- Vehicle make, model, and model year
- Vehicle Identification Number (VIN)
- Insurance company and policy number
- General description of the damage to the other vehicle

Choose a reputable repair facility that uses quality replacement parts. See “Collision Parts” earlier in this section.

If the airbag has inflated, see *What Will You See after an Airbag Inflates?* ⇨ *70*.

Managing the Vehicle Damage Repair Process

In the event that the vehicle requires damage repairs, GM recommends that you take an active role in its repair. If you have a pre-determined repair facility of choice, take the vehicle there, or have it towed there. Specify to the facility that any required replacement collision parts be original equipment parts, either new Genuine GM parts or recycled original GM parts. Remember, recycled parts will not be covered by the GM vehicle warranty.

Insurance pays the bill for the repair, but you must live with the repair. Depending on your policy limits, your insurance company may initially value the repair using aftermarket parts. Discuss this with the repair professional, and insist on Genuine GM parts. Remember, if the vehicle is leased, you may be obligated to have the vehicle repaired with Genuine GM parts, even if your insurance coverage does not pay the full cost.

If another party's insurance company is paying for the repairs, you are not obligated to accept a repair valuation based on that insurance company's collision policy repair limits, as you have no contractual limits with that company. In such cases, you can have control of the repair and parts choices as long as the cost stays within reasonable limits.

Service Publications Ordering Information

Service Manuals

Service Manuals have the diagnosis and repair information on the engines, transmission, axle, suspension, brakes, electrical, steering, body, etc.

Owner Information

Owner publications are written specifically for owners and intended to provide basic operational information about the vehicle. The Owner’s Manual includes the Maintenance Schedule for all models.

In-Portfolio: Includes a Portfolio, Owner’s Manual, and Warranty Manual.

RETAIL SELL PRICE: $35.00 – $40.00 (U.S.) plus handling and shipping fees.

Without Pouch: Owner’s Manual only.

RETAIL SELL PRICE:
$25.00 (U.S.) plus handling and shipping fees.

Current and Past Models

Service and Owner publications are available for many current and past model year GM vehicles.

ORDER TOLL FREE:
1-800-551-4123 Monday – Friday 8:00 AM – 6:00 PM Eastern Time

For Credit Card Orders Only (VISA-MasterCard-Discover), see Helm, Inc. at: www.helminc.com.

Or write to:

Helm, Incorporated
Attention: Customer Service
47911 Halyard Drive
Plymouth, MI 48170

Prices are subject to change without notice and without incurring obligation. Allow ample time for delivery.

All listed prices are quoted in U.S. funds. Make checks payable in U.S. funds.

Radio Frequency Statement

This vehicle has systems that operate on a radio frequency that complies with Part 15/Part 18 of the Federal Communications Commission (FCC) rules and with Innovation, Science and Economic Development (ISED) Canada's RSP-100 / license-exempt RSS's / ICES-001.

Operation is subject to the following two conditions:

1. The device may not cause harmful interference.
2. The device must accept any interference received, including interference that may cause undesired operation of the device.

Changes or modifications to any of these systems by other than an authorized service facility could void authorization to use this equipment.

Reporting Safety Defects

Reporting Safety Defects to the United States Government

If you believe that your vehicle has a defect which could cause a crash or could cause injury or death, you should immediately inform the National Highway Traffic Safety Administration (NHTSA) in addition to notifying General Motors.

If NHTSA receives similar complaints, it may open an investigation, and if it finds that a safety defect exists in a group of vehicles, it may order a recall and remedy campaign. However, NHTSA cannot become involved in individual problems between you, your dealer, or General Motors.

To contact NHTSA, you may call the Vehicle Safety Hotline toll-free at 1-888-327-4236 (TTY: 1-800-424-9153); go to *http://www.safercar.gov;* or write to:

Administrator, NHTSA
1200 New Jersey Avenue, S.E.
Washington, D.C. 20590

You can also obtain other information about motor vehicle safety from *http://www.safercar.gov*.

Reporting Safety Defects to the Canadian Government

If you live in Canada, and you believe that the vehicle has a safety defect, notify Transport Canada immediately, and notify General Motors of Canada Company. Call Transport Canada at 1-800-333-0510; go to:

www.tc.gc.ca/recalls (English)

www.tc.gc.ca/rappels (French)

or write to:

Transport Canada
Motor Vehicle Safety Directorate
Defect Investigations and Recalls Division
80 Noel Street
Gatineau, QC J8Z 0A1

Reporting Safety Defects to General Motors

In addition to notifying NHTSA (or Transport Canada) in a situation like this, notify General Motors.

Call 1-800-521-7300, or write:

Buick Customer Assistance Center
P.O. Box 33136
Detroit, MI 48232–5136

In Canada, call 1-800-263-3777 (English) or 1-800-263-7854 (French), or write:

General Motors of Canada Company
Customer Care Centre, Mail Code: CA1-163-005
1908 Colonel Sam Drive
Oshawa, Ontario L1H 8P7

In Mexico, call 01-800-466-0818.

In other Central America and Caribbean Countries, call 52-722-236-0680.

Vehicle Data Recording and Privacy

The vehicle has a number of computers that record information about the vehicle's performance and how it is driven. For example, the vehicle uses computer modules to monitor and control engine and transmission performance, to monitor the conditions for airbag deployment and deploy them in a crash, and, if equipped, to provide antilock braking to help the driver control the vehicle. These modules may store data to help the dealer technician service the vehicle. Some modules may also store data about how the vehicle is operated, such as rate of fuel consumption or average speed. These modules may retain personal preferences, such as radio presets, seat positions, and temperature settings.

Event Data Recorders

This vehicle is equipped with an event data recorder (EDR). The main purpose of an EDR is to record, in certain crash or near crash-like situations, such as an air bag deployment or hitting a road obstacle, data that will assist in understanding how a vehicle's systems performed. The EDR is designed to record data related to vehicle dynamics and safety systems for a short period of time, typically 30 seconds or less. The EDR in this vehicle is designed to record such data as:

- How various systems in your vehicle were operating;
- Whether or not the driver and passenger safety belts were buckled/fastened;
- How far (if at all) the driver was depressing the accelerator and/or brake pedal; and,
- How fast the vehicle was traveling.

These data can help provide a better understanding of the circumstances in which crashes and injuries occur.

Note

EDR data are recorded by your vehicle only if a non-trivial crash situation occurs; no data are recorded by the EDR under normal driving conditions and no personal data (e.g., name, gender, age, and crash location) are recorded. However, other parties, such as law enforcement, could combine the EDR data with the type of personally identifying data routinely acquired during a crash investigation.

To read data recorded by an EDR, special equipment is required, and access to the vehicle or the EDR is needed. In addition to the vehicle manufacturer, other parties, such as law enforcement, that have the special equipment, can read the information if they have access to the vehicle or the EDR.

GM will not access these data or share it with others except: with the consent of the vehicle owner or, if the vehicle is leased, with the consent of the lessee; in response to an official request by police or similar government office; as part of GM's defense of litigation through the discovery process; or, as required by law. Data that GM collects or receives may also be used for GM research needs or may be made available to others for research purposes, where a need is shown and the data is not tied to a specific vehicle or vehicle owner.

OnStar

If the vehicle is equipped with OnStar and has an active service plan, additional data may be collected through the OnStar system. This includes information about the vehicle's operation; collisions involving the vehicle; the use of the vehicle and its features; and, in certain situations, the location and approximate GPS speed of the vehicle. Refer to the OnStar Terms and Conditions and Privacy Statement on the OnStar website.

See *OnStar Additional Information* ⇨ *312*.

Infotainment System

If the vehicle is equipped with a navigation system as part of the infotainment system, use of the system may result in the storage of destinations, addresses, telephone numbers, and other trip information. See the infotainment manual for information on stored data and for deletion instructions.

OnStar

OnStar Overview
OnStar Overview 306

OnStar Services
Emergency 307
Security 308
Navigation 308
Connections 309
Diagnostics 311

OnStar Additional Information
OnStar Additional Information 312

OnStar Overview

Voice Command Button

Blue OnStar Button

Red Emergency Button

This vehicle may be equipped with a comprehensive, in-vehicle system that can connect to an OnStar Advisor for Emergency, Security, Navigation, Connections, and Diagnostics Services. OnStar services may require a paid service plan and data plan. OnStar requires the vehicle battery and electrical system, cellular service, and GPS satellite signals to be available and operating. OnStar acts as a link to existing emergency service providers. OnStar may collect information about you and your vehicle, including location information. See OnStar User Terms, Privacy Statement, and Software Terms for more details including system limitations at www.onstar.com (U.S.) or www.onstar.ca (Canada).

The OnStar system status light is next to the OnStar buttons. If the status light is:

- Solid Green: System is ready.
- Flashing Green: On a call.
- Red: Indicates a problem.
- Off: System is active. Press twice to speak with an OnStar Advisor.

Press or call 1-888-4ONSTAR (1-888-466-7827) to speak to an Advisor.

Functionality of the Voice Command button may vary by vehicle and region.

Press to:

- Open the OnStar app on the infotainment display. See the infotainment manual for information on how to use the OnStar app.

Or

- Make a call, end a call, or answer an incoming call.
- Give OnStar Hands-Free Calling voice commands.
- Give OnStar Turn-by-Turn Navigation voice commands.
- Obtain and customize the Wi-Fi hotspot name or SSID and password, if equipped.

Press to connect to an Advisor to:

- Verify account information or update contact information.
- Get driving directions.
- Receive a Diagnostic check of the vehicle's key operating systems.
- Receive Roadside Assistance.
- Manage Wi-Fi Settings, if equipped.

Press SOS to get a priority connection to an OnStar Advisor available 24/7 to:

- Get help for an emergency.
- Be a Good Samaritan or respond to an AMBER Alert.
- Get assistance in severe weather or other crisis situations and find evacuation routes.

OnStar Services

Emergency

Emergency Services require an active, OnStar service plan (excludes Basic Plan). With Automatic Crash Response, built-in sensors can automatically alert a specially trained OnStar Advisor who is immediately connected in to the vehicle to help.

Press SOS for a priority connection to an OnStar Advisor who can contact emergency service providers, direct them to your exact location, and relay important information.

With OnStar Crisis Assist, specially trained Advisors are available 24 hours a day, 7 days a week, to provide a central point of contact, assistance, and information during a crisis.

With Roadside Assistance, Advisors can locate a nearby service provider to help with a flat tire, a battery jump, or an empty gas tank.

Security

If equipped, OnStar provides these services:

- With Stolen Vehicle Assistance, OnStar Advisors can use GPS to pinpoint the vehicle and help authorities quickly recover it.
- With Remote Ignition Block, if equipped, OnStar can block the engine from being restarted.
- With Stolen Vehicle Slowdown, if equipped, OnStar can work with law enforcement to gradually slow the vehicle down.

Theft Alarm Notification

If equipped, if the doors are locked and the vehicle alarm sounds, a notification by text, e-mail, or phone call will be sent. If the vehicle is stolen, an OnStar Advisor can work with authorities to recover the vehicle.

Navigation

OnStar navigation requires a specific OnStar service plan.

Press On to receive Turn-by-Turn directions or have them sent to the vehicle's navigation screen, if equipped.

Turn-by-Turn Navigation

1. Press On to connect to an Advisor.
2. Request directions to be downloaded to the vehicle.
3. Follow the voice-guided commands.

Using Voice Commands During a Planned Route

Functionality of the Voice Command button may vary by vehicle and region. For some vehicles, press to open the OnStar app on the infotainment display. For other vehicles press as follows.

Cancel Route

1. Press . System responds: "OnStar ready," then a tone.
2. Say "Cancel route." System responds: "Do you want to cancel directions?"
3. Say "Yes." System responds: "OK, request completed, thank you, goodbye."

Route Preview

1. Press . System responds: "OnStar ready," then a tone.
2. Say "Route preview." System responds with the next three maneuvers.

Repeat

1. Press . System responds: "OnStar ready," then a tone.
2. Say "Repeat." System responds with the last direction given, then responds with "OnStar ready," then a tone.

Get My Destination

1. Press . System responds: “OnStar ready,” then a tone.
2. Say “Get my destination.” System responds with the address and distance to the destination, then responds with “OnStar ready,” then a tone.

Send Destination to Vehicle

Directions can be sent to the vehicle’s navigation screen, if equipped.

Press , then ask the Advisor to download directions to the vehicle’s navigation system, if equipped. After the call ends, the navigation screen will provide prompts to begin driving directions. Routes that are sent to the navigation screen can only be canceled through the navigation system.

See www.onstar.com (U.S.) or www.onstar.ca (Canada).

Connections

The following OnStar services help with staying connected.

For coverage maps, see www.onstar.com (U.S.) or www.onstar.ca (Canada).

Ensuring Security

- Change the default passwords for the Wi-Fi hotspot and myBuick mobile application. Make these passwords different from each other and use a combination of letters, numbers, and symbols to increase the security.
- Change the default name of the SSID (Service Set Identifier). This is your network’s name that is visible to other wireless devices. Choose a unique name and avoid family names or vehicle descriptions.

OnStar Wi-Fi Hotspot (If Equipped)

The vehicle may have a built-in Wi-Fi hotspot that provides access to the Internet and web content at 4G LTE speed. Up to seven mobile devices can be connected. A data plan is required. Use the in-vehicle controls only when it is safe to do so.

1. To retrieve Wi-Fi hotspot information, press to open the OnStar app on the infotainment display, then select Wi-Fi Hotspot. On some vehicles, touch Wi-Fi or Settings on the screen.
2. The Wi-Fi settings will display the Wi-Fi hotspot name (SSID), password, and on some vehicles, the connection type (no Internet connection, 3G, 4G, 4G LTE), and signal quality (poor, good, excellent).
3. To change the SSID or password, press or call 1-888-4ONSTAR to connect with an Advisor. On some vehicles, the SSID and password can be changed in the Wi-Fi Hotspot menu.

After initial set-up, your vehicle's Wi-Fi hotspot will connect automatically to your mobile devices. Manage data usage by turning Wi-Fi on or off on your mobile device, by using the myBuick mobile app, or by contacting an OnStar Advisor. On some vehicles, Wi-Fi can also be managed from the Wi-Fi Hotspot menu.

MyBuick Mobile App (If Available)

Download the myBuick mobile app to compatible Apple and Android smartphones. Buick users can access the following services from a smartphone:

- Remotely start/stop the vehicle, if factory-equipped.
- Lock/unlock doors, if equipped with automatic locks.
- Activate the horn and lamps.
- Check the vehicle's fuel level, oil life, or tire pressure, if factory-equipped with the Tire Pressure Monitor System.
- Send destinations to the vehicle.
- Locate the vehicle on a map (U.S. market only).
- Turn the vehicle's Wi-Fi hotspot on/off, manage settings, and monitor data consumption, if equipped.
- Locate a dealer and schedule service.
- Request roadside assistance.
- Set a parking reminder with pin drop, take a photo, make a note, and set a timer.
- Connect with Buick on social media.

For myBuick mobile app information and compatibility, see www.my.buick.com.

An active OnStar service, compatible device, factory-installed remote start, and power locks are required. Data rates apply. See www.onstar.com for details and system limitations.

Remote Services

Contact an OnStar Advisor to unlock the doors or sound the horn and flash the lamps.

OnStar AtYourService

OnStar Advisors can provide offers from restaurants and retailers on your route, help locate hotels, or book a room. These services vary by market.

OnStar Hands-Free Calling

Make and receive calls with the built-in wireless calling service, which requires available minutes. Functionality of the Voice Command button may vary by vehicle and region. For some vehicles, press to open the OnStar app on the infotainment display, then select Hands-Free calling. For other vehicles press as follows.

Make a Call

1. Press . System responds: "OnStar ready."

2. Say “Call.” System responds: “Call. Please say the name or number to call.”
3. Say the entire number without pausing, including a “1” and the area code. System responds: “OK, calling.”

Calling 911 Emergency

1. Press . System responds: “OnStar ready.”
2. Say “Call.” System responds: “Call. Please say the name or number to call.”
3. Say “911” without pausing. System responds: “911.”
4. Say “Call.” System responds: “OK, dialing 911.”

Retrieve My Number

1. Press . System responds: “OnStar ready.”
2. Say “My number.” System responds: “Your OnStar Hands-Free Calling number is,” then says the number.

End a Call

Press . System responds: “Call ended.”

Verify Minutes and Expiration

Press and say “Minutes” then “Verify” to check how many minutes remain and their expiration date.

Diagnostics

By monitoring and reporting on the vehicle’s key systems, OnStar Advanced Diagnostics provides a way to keep up on maintenance. Capabilities vary by model. See www.onstar.com for details and system limitations. Message and data rates may apply.

Advanced Diagnostics requires an active OnStar paid service plan, e-mail address on file, and enrollment in Advanced Diagnostics.

Includes:

- Diagnostic Alerts: Set preferences to receive real-time e-mails, texts, or monthly reports of the vehicle’s health. Or press to have an Advisor initiate a remote diagnostic report.
- Proactive Alerts: Receive a real-time e-mail or text message regarding potential issues with key vehicle components, such as the battery, fuel system, or starter system. Alerts for potential issues appear on the infotainment display. Proactive Alerts are designed to help predict specific types of issues based on information collected from the vehicle. Other factors may affect vehicle performance. Not all issues will deliver alerts. In some cases, a dealer service

check may be required to confirm the accuracy of the alerts.

- Dealer Maintenance Notification: Have the vehicle notify your preferred dealer when it is time for maintenance. Your dealer will then contact you to set up an appointment.

To begin, press On to speak to an Advisor, or see www.onstar.com.

OnStar Additional Information

OnStar Smart Driver

OnStar Smart Driver provides information about driving behavior to help maximize overall vehicle performance, reduce wear and tear, and enhance fuel efficiency. An Insurance Discounts Eligibility feature is also offered within OnStar Smart Driver. See www.onstar.com for details regarding vehicle eligibility and system limitations. OnStar, General Motors, and their affiliates are not insurance providers. Obtain insurance only from licensed insurance providers.

In-Vehicle Audio Messages

Audio messages may play important information at the following times:

- Prior to vehicle purchase. Press On to set up an account.
- With the OnStar Basic Plan, every 60 days.
- After change in ownership and at 90 days.

Transferring Service

Press On to request account transfer eligibility information. The Advisor can cancel or change account information.

Selling/Transferring the Vehicle

Call 1-888-4ONSTAR (1-888-466-7827) immediately to terminate your OnStar services if the vehicle is disposed of, sold, transferred, or if the lease ends.

Reactivation for Subsequent Owners

Press On and follow the prompts to speak to an Advisor as soon as possible. The Advisor will update vehicle records and explain OnStar service options.

How OnStar Service Works

Automatic Crash Response, Emergency Services, Crisis Assist, Stolen Vehicle Assistance, Advanced Vehicle Diagnostics, Remote Services, Roadside Assistance, Turn-by-Turn Navigation, and Hands-Free Calling are available on most vehicles. Not all OnStar services are available everywhere or on all vehicles. For more information, a full description of OnStar services, system limitations, and OnStar User Terms, Privacy Statement, and Software Terms:

- Call 1-888-4ONSTAR (1-888-466-7827).
- See www.onstar.com (U.S.).
- See www.onstar.ca (Canada).
- Call TTY 1-877-248-2080.
- Press On to speak with an Advisor.

OnStar services cannot work unless the vehicle is in a place where OnStar has an agreement with a wireless service provider for service in that area. The wireless service provider must also have coverage, network capacity, reception, and technology compatible with OnStar services. Service involving location information about the vehicle cannot work unless GPS signals are available, unobstructed, and compatible with the OnStar hardware. OnStar services may not work if the OnStar equipment is not properly installed or it has not been properly maintained. If equipment or software is added, connected, or modified, OnStar services may not work. Other problems beyond the control of OnStar — such as hills, tall buildings, tunnels, weather, electrical system design and architecture of the vehicle, damage to the vehicle in a crash, or wireless phone network congestion or jamming — may prevent service.

See *Radio Frequency Statement* ⇨ *302*.

Services for People with Disabilities

Advisors provide services to help with physical disabilities and medical conditions.

Press On to help:

- Locate a gas station with an attendant to pump gas.
- Find a hotel, restaurant, etc., that meets accessibility needs.
- Provide directions to the closest hospital or pharmacy in urgent situations.

TTY Users

OnStar has the ability to communicate to deaf, hard-of-hearing, or speech-impaired customers while in the vehicle. The available dealer-installed TTY system can provide in-vehicle access to all OnStar services, except Virtual Advisor and OnStar Turn-by-Turn Navigation.

OnStar Personal Identification Number (PIN)

A PIN is needed to access some OnStar services. The PIN will need to be changed the first time when speaking with an Advisor. To change the OnStar PIN, contact an OnStar Advisor by pressing On or calling 1-888-4ONSTAR.

Warranty

OnStar equipment may be warranted as part of the vehicle warranty.

Languages

The vehicle can be programmed to respond in multiple languages. Press On and ask for an Advisor. Advisors are available in English, Spanish, and French. Available languages may vary by country.

Potential Issues

OnStar cannot perform Remote Door Unlock or Stolen Vehicle Assistance after the vehicle has been off continuously for 10 days without an ignition cycle. If the vehicle has not been started for 10 days, OnStar can contact Roadside Assistance or a locksmith to help gain access to the vehicle.

Global Positioning System (GPS)

- Obstruction of the GPS can occur in a large city with tall buildings; in parking garages; around airports; in tunnels and underpasses; or in an area with very dense trees. If GPS signals are not available, the OnStar system should still operate to call OnStar. However, OnStar could have difficulty identifying the exact location.
- In emergency situations, OnStar can use the last stored GPS location to send to emergency responders.

A temporary loss of GPS can cause loss of the ability to send a Turn-by-Turn Navigation route. The Advisor may give a verbal route or may ask for a call back after the vehicle is driven into an open area.

Cellular and GPS Antennas

Cellular reception is required for OnStar to send remote signals to the vehicle. Do not place items over or near the antenna to prevent blocking cellular and GPS signal reception.

Unable to Connect to OnStar Message

If there is limited cellular coverage or the cellular network has reached maximum capacity, this message may come on. Press On to try the call again or try again after driving a few miles into another cellular area.

Vehicle and Power Issues

OnStar services require a vehicle electrical system, wireless service, and GPS satellite technologies to be available and operating for features to function properly. These systems may not operate if the battery is discharged or disconnected.

Add-on Electrical Equipment

The OnStar system is integrated into the electrical architecture of the vehicle. Do not add any electrical equipment. See *Add-On Electrical Equipment* ⇨ *197*. Added electrical equipment may interfere with the operation of the OnStar system and cause it to not operate.

Vehicle Software Updates

OnStar or GM may remotely deliver software updates or changes to the vehicle without further notice or consent. These updates or changes may enhance or maintain safety, security, or the operation of the vehicle or the vehicle systems. Software updates or changes may affect or erase data or settings that are stored in the vehicle, such as OnStar Hands-Free Calling name tags, saved navigation destinations, or pre-set radio stations. Neither OnStar nor GM is responsible for any affected or erased data or settings. These updates or changes may also collect personal information. Such collection is described in the OnStar privacy statement or separately disclosed at the time of installation. These updates or changes may also cause a system to automatically communicate with GM servers to collect information about vehicle system status, identify whether updates or changes are available, or deliver updates or changes. An active OnStar agreement constitutes consent to these software updates or changes and agreement that either OnStar or GM may remotely deliver them to the vehicle.

Privacy

The complete OnStar Privacy Statement may be found at www.onstar.com (U.S.), or www.onstar.ca (Canada). We recommend that you review it. If you have any questions, call 1-888-4ONSTAR (1-888-466-7827) or press on to speak with an Advisor. Users of wireless communications are cautioned that the privacy of any information sent via wireless cellular communications cannot be assured. Third parties may unlawfully intercept or access transmissions and private communications without consent.

OnStar - Software Acknowledgements

Certain OnStar components include libcurl and unzip software and other third party software. Below are the notices and licenses associated with libcurl and unzip and for other third party software please see http://opensource.lge.com/index

www.onstar.com/us/en/

libcurl:

COPYRIGHT AND PERMISSION NOTICE

Copyright (c) 1996 - 2010, Daniel Stenberg, <daniel@haxx.se>.

All rights reserved.

Permission to use, copy, modify, and distribute this software for any purpose with or without fee is hereby granted, provided that the above copyright notice and this permission notice appear in all copies.

THE SOFTWARE IS PROVIDED "AS IS," WITHOUT WARRANTY OF ANY KIND, EXPRESS OR IMPLIED, INCLUDING BUT NOT LIMITED TO THE WARRANTIES OF MERCHANTABILITY, FITNESS FOR A PARTICULAR PURPOSE AND NONINFRINGEMENT OF THIRD PARTY RIGHTS. IN NO EVENT SHALL THE AUTHORS OR COPYRIGHT HOLDERS BE LIABLE FOR ANY CLAIM, DAMAGES OR OTHER LIABILITY, WHETHER IN AN ACTION OF CONTRACT, TORT OR OTHERWISE, ARISING FROM, OUT OF OR IN CONNECTION WITH THE SOFTWARE OR THE USE OR OTHER DEALINGS IN THE SOFTWARE.

Except as contained in this notice, the name of a copyright holder shall not be used in advertising or otherwise to promote the sale, use or other dealings in this Software without prior written authorization of the copyright holder.

unzip:

This is version 2005-Feb-10 of the Info-ZIP copyright and license. The definitive version of this document should be available at ftp://ftp.info-zip.org/pub/infozip/license.html indefinitely.

Copyright (c) 1990-2005 Info-ZIP. All rights reserved.

For the purposes of this copyright and license, "Info-ZIP" is defined as the following set of individuals:

Mark Adler, John Bush, Karl Davis, Harald Denker, Jean-Michel Dubois, Jean-loup Gailly, Hunter Goatley, Ed Gordon, Ian Gorman, Chris Herborth, Dirk Haase, Greg Hartwig, Robert Heath, Jonathan Hudson, Paul Kienitz, David Kirschbaum, Johnny Lee, Onno van der Linden, Igor Mandrichenko, Steve P. Miller, Sergio Monesi, Keith Owens, George Petrov, Greg Roelofs, Kai Uwe Rommel, Steve Salisbury, Dave Smith, Steven M. Schweda, Christian Spieler, Cosmin Truta, Antoine Verheijen, Paul von Behren, Rich Wales, Mike White.

This software is provided "as is," without warranty of any kind, express or implied. In no event shall Info-ZIP or its contributors be held liable for any direct, indirect, incidental, special or consequential damages arising out of the use of or inability to use this software.

Permission is granted to anyone to use this software for any purpose, including commercial applications, and to alter it and redistribute it freely, subject to the following restrictions:

1. Redistributions of source code must retain the above copyright notice, definition, disclaimer, and this list of conditions.
2. Redistributions in binary form (compiled executables) must reproduce the above copyright notice, definition, disclaimer, and this list of conditions in documentation and/or other materials provided with the distribution. The sole exception to this condition is redistribution of a standard UnZipSFX binary (including SFXWiz) as part of a

self-extracting archive; that is permitted without inclusion of this license, as long as the normal SFX banner has not been removed from the binary or disabled.

3. Altered versions–including, but not limited to, ports to new operating systems, existing ports with new graphical interfaces, and dynamic, shared, or static library versions–must be plainly marked as such and must not be misrepresented as being the original source. Such altered versions also must not be misrepresented as being Info-ZIP releases–including, but not limited to, labeling of the altered versions with the names “Info-ZIP” (or any variation thereof, including, but not limited to, different capitalizations), “Pocket UnZip,” “WiZ” or “MacZip” without the explicit permission of Info-ZIP. Such altered versions are further prohibited from misrepresentative use of the Zip-Bugs or Info-ZIP e-mail addresses or of the Info-ZIP URL(s).

4. Info-ZIP retains the right to use the names “Info-ZIP,” “Zip,” “UnZip,” “UnZipSFX,” “WiZ,” “Pocket UnZip,” “Pocket Zip,” and “MacZip” for its own source and binary releases.

Index

A

About Driving the Vehicle 2
Accessories and
  Modifications 200
Accessory Power 171
Add-On Electrical Equipment ...197
Additional Information
  OnStar 312
Additional Maintenance
  and Care 283
Adjustments
  Lumbar, Front Seats 50
Air Cleaner/Filter, Engine 210
Air Conditioning 145, 148
Air Filter, Passenger
  Compartment 152
Air Intake 152
Air Vents 152
Airbag System
  Check 77
  How Does an Airbag
    Restrain? 70
  Passenger Sensing System 72
  What Makes an Airbag
    Inflate? 70
  What Will You See after an
    Airbag Inflates? 70
Airbag System (cont'd)
  When Should an Airbag
    Inflate? 69
  Where Are the Airbags? 67
Airbags
  Adding Equipment to the
    Vehicle 76
  Passenger Status Indicator 115
  Readiness Light 115
  Servicing Airbag-Equipped
    Vehicles 76
  System Check 66
Alarm
  Vehicle Security 39
Alert
  Side Blind Zone (SBZA) 190
All-Season Tires 236
All-Wheel Drive 178, 219
Antilock Brake System (ABS) ...178
  Warning Light 119
Appearance Care
  Exterior 267
  Interior 271
Armrest
  Front Seat 53
  Rear Seat 59
Assistance Program,
  Roadside 296

Automatic
Door Locks 36
Headlamp System 139
Transmission 175
Transmission Fluid 210
Automatic Transmission
Manual Mode 177
Shift Lock Control Function Check 220

B

Battery
Exterior Lighting Battery Saver 143
Power Protection 143
Battery - North America 219, 261
Blade Replacement, Wiper 221
Brake
System Warning Light 118
Brakes 217
Antilock 178
Assist 180
Fluid 218
Parking 179
Braking 157
Break-In, New Vehicle 166
Bulb Replacement
Halogen Bulbs 224
Bulb Replacement (cont'd)
Headlamp Aiming 224
Headlamps 224
Headlamps, Front Turn Signal, and Parking Lamps 224
License Plate Lamps 227
Taillamps, Turn Signal, Sidemarker, Stoplamps, and Backup Lamps 225
Buying New Tires 250

C

Calibration 106
California
Fuel Requirements 194
Perchlorate Materials Requirements 200
California Proposition 65 Warning . . . . . 199, 219, 261, Back Cover
Camera
Rear Vision (RVC) 184
Canadian Vehicle Owners 2
Capacities and Specifications 290
Carbon Monoxide
Engine Exhaust 174
Liftgate 38
Winter Driving 160
Cargo
Cover 99
Management System 99
Caution, Danger, and Warning 3
Center Console Storage 98
Chains, Tire 254
Charging System Light 116
Check
Engine Light (Malfunction Indicator) 116
Child Restraints
Infants and Young Children 79
Lower Anchors and Tethers for Children 84
Older Children 78
Securing 92, 94
Systems 82
Circuit Breakers 228
Cleaning
Exterior Care 267
Interior Care 271
Climate Control Systems 145
Air Conditioning 145
Dual Automatic 148

Climate Control Systems (cont'd)
Heating 145
Clock 107
Cluster, Instrument 109
Collision Damage Repair 299
Compact Spare Tire 260
Compartments
Storage 97
Compass 106
Connections
OnStar 309
Control
Traction and Electronic
Stability 180
Control of a Vehicle 157
Convenience Net 100
Convex Mirrors 41
Coolant
Engine Temperature Gauge . . . 113
Cooling 145, 148
Cooling System 211
Courtesy Lamps 141
Courtesy Transportation
Program 298
Cover
Cargo 99
Cruise Control 182
Light 123
Cupholders 98
Customer Assistance 295
Offices 294
Text Telephone (TTY)
Users 295
Customer Information
Service Publications
Ordering Information 301
Customer Satisfaction
Procedure 292

D

Damage Repair, Collision 299
Danger, Warning, and Caution 3
Data Collection
Infotainment System 305
OnStar 305
Data Recorders, Event 304
Daytime Running
Lamps (DRL) 139
Defensive Driving 156
Delayed Locking 36
Diagnostics
OnStar 311
Distracted Driving 155
Dome Lamps 141
Door
Delayed Locking 36
Locks 35
Power Locks 36
Drive Belt Routing, Engine 291
Drive Systems
All-Wheel Drive 178, 219
Driver Behavior 155
Driver Information
Center (DIC) 123, 125
Driving
Defensive 156
Drunk 156
Environment 155
For Better Fuel Economy 24
Hill and Mountain Roads 160
If the Vehicle is Stuck 162
Loss of Control 158
Off-Road Recovery 158
Vehicle Load Limits 162
Wet Roads 159
Winter 160
Driving the Vehicle 2
Dual Automatic Climate
Control System 148

E

Electrical Equipment,
Add-On 197
Electrical System
Engine Compartment Fuse
Block 228
Fuses and Circuit Breakers . . . 228
Instrument Panel Fuse
Block 232
Overload 227
Rear Compartment Fuse
Block 234
Emergency
OnStar 307
Engine
Air Cleaner/Filter 210
Check Light (Malfunction
Indicator) 116
Compartment Overview 203
Coolant Temperature
Gauge 113
Cooling System 211
Drive Belt Routing 291
Exhaust 174
Heater 170
Oil Life System 209
Oil Pressure Light 121
Overheating 215
Engine (cont'd)
Power Messages 128
Running While Parked 175
Starting 168
Entry Lighting 142
Event Data Recorders 304
Exit Lighting 142
Extended Parking 173
Extender, Seat Belt 64
Exterior Lamp Controls 138
Exterior Lighting Battery
Saver 143

F

Features
Memory 11
Filter,
Engine Air Cleaner 210
First Aid Kit 100
Flash-to-Pass 139
Flashers, Hazard Warning 140
Flat Tire 254
Changing 256
Floor Mats 274
Fluid
Automatic Transmission 210
Brakes 218
Washer 216
Fog Lamps
Front 141
Folding Mirrors 41
Folding Seatback 54
Forward Collision Alert
(FCA) System 188
Frequency Statement
Radio 302
Front Fog Lamp
Light 122
Front Seat Armrest 53
Front Seats
Adjustment 49
Heated 53
Fuel 193
Additives 194
Economy Driving 24
Filling a Portable Fuel
Container 196
Filling the Tank 194
Foreign Countries 194
Gauge 112
Low Fuel Warning Light 122
Requirements, California 194
Fuses
Engine Compartment Fuse
Block 228
Fuses and Circuit Breakers . . . 228

Fuses (cont'd)
Instrument Panel Fuse Block 232
Rear Compartment Fuse Block 234

G

Garage Door Opener 134
Programming 134
Gas Strut(s) 222
Gauges
Engine Coolant Temperature 113
Fuel 112
Odometer 112
Speedometer 111
Tachometer 112
Trip Odometer 112
Warning Lights and Indicators 108
General Information
Service and Maintenance 276
Towing 197
Vehicle Care 199
Glove Box 97
GM Mobility Reimbursement Program 296

H

Halogen Bulbs 224
Hazard Warning Flashers 140
Head Restraints 48
Headlamps
Aiming 224
Automatic 139
Bulb Replacement 224
Daytime Running Lamps (DRL) 139
Flash-to-Pass 139
High-Beam On Light 122
High/Low Beam Changer 138
Lamps On Reminder 123
Heated
Steering Wheel 103
Heated Front Seats 53
Heated Mirrors 41
Heater
Engine 170
Heating 145, 148
High-Beam On Light 122
Hill and Mountain Roads 160
Hood 201
Horn 103
How to Wear Seat Belts Properly 60
HVAC 145, 148

I

Ignition Positions 166
Immobilizer 40
Light 122
Indicator
Vehicle Ahead 120
Infants and Young Children, Restraints 79
Infotainment 144
Infotainment System 305
Instrument Cluster 109
Instrument Panel
Storage Area 97
Interior Rearview Mirrors 42
Introduction 2

J

Jump Starting - North America 261

K

Keyless Entry
Remote (RKE) System 27
Keys 26

L

Labeling, Tire Sidewall 237
Lamps
Courtesy 141

Lamps (cont'd)
Daytime Running (DRL) 139
Dome 141
Exterior Controls 138
Exterior Lighting Battery Saver 143
Front Fog 141
Headlamps, Front Turn Signal, and Parking Lamps 224
License Plate 227
Malfunction Indicator (Check Engine) 116
On Reminder 123
Reading 142
Lane Departure Warning (LDW) 192
Lane Departure Warning Light 119
Lap-Shoulder Belt 61
LATCH System
Replacing Parts after a Crash 91
LATCH, Lower Anchors and Tethers for Children 84
LED Lighting 224
Liftgate 38
Lighting
Entry 142
Exit 142
Illumination Control 141
LED 224
Lights
Airbag Readiness 115
Antilock Brake System (ABS) Warning 119
Brake System Warning 118
Charging System 116
Check Engine (Malfunction Indicator) 116
Cruise Control 123
Engine Oil Pressure 121
Flash-to-Pass 139
Front Fog Lamp 122
High-Beam On 122
High/Low Beam Changer 138
Immobilizer 122
Lane Departure Warning 119
Low Fuel Warning 122
Seat Belt Reminders 114
StabiliTrak OFF 120
Tire Pressure 121
Traction Control System (TCS)/StabiliTrak 120
Traction Off 120
Locks
Automatic Door 36
Delayed Locking 36
Door 35
Lockout Protection 36
Power Door 36
Safety 37
Loss of Control 158
Low Fuel Warning Light 122
Lower Anchors and Tethers for Children (LATCH System) 84
Lumbar Adjustment 50
Front Seats 50

M

Maintenance Records 288
Maintenance and Care Additional 283
Maintenance Schedule 278
Recommended Fluids and Lubricants 286
Malfunction Indicator Lamp 116
Manual Mode 177
Memory Features 11
Memory Seats 51

Messages
Engine Power 128
Vehicle 127
Vehicle Speed 128
Mirrors
Automatic Dimming
Rearview 42
Convex 41
Folding 41
Heated 41
Manual Rearview 42
Power 41
Tilt in Reverse 41
Mirrors, Interior Rearview 42
Monitor System, Tire
Pressure 244

N

Navigation
OnStar 308
Net, Convenience 100
New Vehicle Break-In 166

O

Odometer 112
Trip 112
Off-Road
Recovery 158
Oil
Engine 206
Engine Oil Life System 209
Pressure Light 121
Older Children, Restraints 78
Online Owner Center 295
OnStar 305
OnStar Additional
Information 312
OnStar Connections 309
OnStar Diagnostics 311
OnStar Emergency 307
OnStar Navigation 308
OnStar Overview 306
OnStar Security 308
Ordering
Service Publications 301
Outlets
Power 107
Overheating, Engine 215

P

Park
Shifting Into 171
Shifting Out of 172
Parking
Brake 179
Parking (cont'd)
Brake and P (Park)
Mechanism Check 220
Extended 173
Over Things That Burn 173
Parking Assist 186
Passenger Airbag Status
Indicator 115
Passenger Compartment Air
Filter 152
Passenger Sensing System 72
Perchlorate Materials
Requirements, California 200
Personalization
Vehicle 128
Power
Door Locks 36
Mirrors 41
Outlets 107
Protection, Battery 143
Retained Accessory (RAP) ... 171
Seat Adjustment 50
Windows 43
Pregnancy, Using Seat Belts 64
Privacy
Vehicle Data Recording 304

Program
Courtesy Transportation 298
Proposition
65 Warning,
California .....199, 219, 261, Back Cover

R
Radio Frequency Statement 302
Reading Lamps 142
Rear Seat Armrest 59
Rear Seats 56
Rear Vision Camera (RVC) 184
Rear Window Washer/Wiper 105
Rearview Mirrors 42
Automatic Dimming 42
Reclining Seatbacks 50
Recommended Fluids and
Lubricants 286
Records
Maintenance 288
Recreational Vehicle Towing 264
Reimbursement Program,
GM Mobility 296
Remote Keyless Entry (RKE)
System 27
Remote Vehicle Start 33
Replacement Parts
Airbags 77
Maintenance 287
Replacing Airbag System 77
Replacing LATCH System
Parts after a Crash 91
Replacing Seat Belt System
Parts after a Crash 65
Reporting Safety Defects
Canadian Government 303
General Motors 303
U.S. Government 302
Restraints
Where to Put 83
Retained Accessory
Power (RAP) 171
Reverse Tilt Mirrors 41
Roads
Driving, Wet 159
Roadside Assistance
Program 296
Roof
Sunroof 45
Roof Rack System 100
Rotation, Tires 248
Routing, Engine Drive Belt 291
Running the Vehicle While
Parked 175

S
Safety Defects Reporting
Canadian Government 303
General Motors 303
U.S. Government 302
Safety Locks 37
Safety System Check 64
Scheduling Appointments 298
Seat Belts 59
Care 64
Extender 64
How to Wear Seat Belts
Properly 60
Lap-Shoulder Belt 61
Reminders 114
Replacing after a Crash 65
Use During Pregnancy 64
Seats
Adjustment, Front 49
Folding Seatback 54
Head Restraints 48
Heated Front 53
Lumbar Adjustment, Front 50
Memory 51
Power Adjustment, Front 50
Rear 56
Reclining Seatbacks 50
Underseat Storage 98

Securing Child Restraints 92, 94
Security
OnStar 308
Vehicle 39
Vehicle Alarm 39
Service 153
Accessories and
Modifications 200
Climate Control System 145
Doing Your Own Work 200
Maintenance Records 288
Maintenance, General
Information 276
Parts Identification Label 289
Publications Ordering
Information 301
Scheduling Appointments 298
Services
Special Application 283
Servicing the Airbag 76
Shift Lock Control Function
Check, Automatic
Transmission 220
Shifting
Into Park 171
Out of Park 172
Side Blind Zone Alert (SBZA) ...190
Sidemarker
Bulb Replacement 225
Signals, Turn and
Lane-Change 140
Spare Tire
Compact 260
Special Application Services 283
Specifications and
Capacities 290
Speedometer 111
StabiliTrak
OFF Light 120
Start Vehicle, Remote 33
Starter Switch Check 220
Starting the Engine 168
Steering 157
Heated Wheel 103
Wheel Adjustment 103
Wheel Controls 103
Stoplamps and Back-Up Lamps
Bulb Replacement 225
Storage Areas
Cargo Cover 99
Cargo Management System 99
Center Console 98
Convenience Net 100
Glove Box 97
Instrument Panel 97
Storage Areas (cont'd)
Roof Rack System 100
Underseat 98
Storage Compartments 97
Struts
Gas 222
Stuck Vehicle 162
Summer Tires 237
Sun Visors 45
Sunroof 45
Symbols 3
System
Forward Collision
Alert (FCA) 188
Infotainment 144, 305
Roof Rack 100

T

Tachometer 112
Taillamps
Bulb Replacement 225
Text Telephone (TTY) Users 295
Theft-Deterrent Systems 40
Immobilizer 40
Time 107
Tires 235
All-Season 236
Buying New Tires 250

Tires (cont'd)
Chains 254
Changing 256
Compact Spare 260
Designations 239
Different Size 251
If a Tire Goes Flat 254
Inspection 248
Pressure 242
Pressure Light 121
Pressure Monitor Operation . . 245
Pressure Monitor System 244
Rotation 248
Sidewall Labeling 237
Terminology and Definitions . . 240
Uniform Tire Quality Grading 252
Wheel Alignment and Tire Balance 253
Wheel Replacement 253
When It Is Time for New Tires 249
Winter 236
Towing
General Information 197
Recreational Vehicle 264
Vehicle 263
Traction
Control System (TCS)/ StabiliTrak Light 120
Off Light 120
Traction Control/Electronic Stability Control 180
Transmission
Automatic 175
Fluid, Automatic 210
Transportation Program, Courtesy 298
Trip Odometer 112
Turn and Lane-Change Signals 140
Turn Signal
Bulb Replacement 225

U

Underseat Storage 98
Uniform Tire Quality Grading . . . 252
Universal Remote System 134
Operation 137
Programming 134
Using This Manual 2

V

Vehicle
Alarm System 39
Canadian Owners 2
Vehicle (cont'd)
Control 157
Design 155
Identification Number (VIN) . . . 289
Load Limits 162
Messages 127
Personalization 128
Remote Start 33
Security 39
Speed Messages 128
Towing 263
Vehicle Ahead Indicator 120
Vehicle Care
Tire Pressure 242
Vehicle Data Recording and Privacy 304
Ventilation, Air 152
Visors 45

W

Warning
Brake System Light 118
Caution and Danger 3
Lane Departure (LDW) 192
Warning Lights, Gauges, and Indicators 108

Warnings
Hazard Flashers 140
Washer Fluid 216
Wheels
Alignment and Tire Balance . . 253
Different Size 251
Replacement 253
When It Is Time for New
Tires 249
Where to Put the Restraint 83
Wi-Fi 309
Windows 43
Power 43
Windshield
Replacement 222
Wiper/Washer 103
Winter
Driving 160
Winter Tires 236
Wiper Blade Replacement 221
Wipers
Rear Washer 105

WARNING

Operating, servicing and maintaining a passenger vehicle or off-road vehicle can expose you to chemicals including engine exhaust, carbon monoxide, phthalates, and lead, which are known to the State of California to cause cancer and birth defects or other reproductive harm. To minimize exposure, avoid breathing exhaust, do not idle engine except as necessary, service your vehicle in a well-ventilated area and wear gloves or wash your hands frequently when servicing your vehicle. For more information go to www.P65Warnings.ca.gov/passenger-vehicle.

U.S. Only

84098804 C