Owner's Manual
for Vehicle

Contents
A - Z

Online Edition for Part No. 01 41 0 157 897 - © 08/03 BMW AG

Online Edition for Part No. 01 41 0 157 897 - © 08/03 BMW AG

X5 3.0i
X5 4.4i

Online Edition for Part No. 01 41 0 157 897 - © 08/03 BMW AG

Online Edition for Part No. 01 41 0 157 897 - © 08/03 BMW AG

Congratulations, and thank you for choosing a BMW.

Thorough familiarity with your vehicle will provide you with enhanced control and security when you drive it. We therefore have this request:

Please take the time to read this Owner's Manual and familiarize yourself with the information that we have compiled for you before starting off in your new BMW. The manual contains important data and instructions intended to assist you in obtaining maximum satisfaction from your BMW's unique array of advanced technical features. It also contains information on vehicle maintenance designed to enhance operating safety while simultaneously helping you to maintain your BMW's value throughout an extended service life. For additional information refer to the supplemental manuals.

This Owner's Manual should be considered a permanent part of this vehicle. It should stay with the vehicle when sold to provide the next owner with important operating, safety and maintenance information.

We wish you an enjoyable driving experience.

BMW AG

Online Edition for Part No. 01 41 0 157 897 - © 08/03 BMW AG

Contents

Notes

About this Owner's Manual 8
Symbols used 8
The individual vehicle 8
Status at time of printing 9
For your own safety 9
Symbol on vehicle parts 10
Service and Warranty 10
Reporting safety defects 11

Overview

Cockpit 14
Instrument cluster 15
Indicator and warning lamps 18
Buttons on the steering wheel 22
Warning triangle 23
First-aid kit 23
Refueling 23
Fuel specifications 25

Controls and features

Locks and security systems:
Keys 28
Central locking system 28
Locks and security systems: from outside 29
Locks and security systems: from inside 33
Liftgate 34
Tailgate 35
Alarm system 37
Power windows 38
Glass roof, electric 40

Adjustments:
Sitting safely 42
Seats 43
Mechanical seat adjustment 44
Power seat adjustment 45
Head restraints 46
Power rear-seat backrest adjustment 47
Safety belts 48
Seat, mirror and steering wheel memory 49
Seat heating 50
Steering wheel 51
Steering wheel heater 52
Mirrors 52

© 2003 Bayerische Motoren Werke Aktiengesellschaft
Munich, Germany
Reprinting, including excerpts, only with the written consent of BMW AG, Munich.

Order No 01 41 0 157 897
US English IX/03
Printed in Germany
Printed on environmentally friendly paper, bleached without chlorine, suitable for recycling.

Passenger safety systems:
Airbags 54
Transporting children safely 56
Vehicle Memory, Key Memory 60

Driving:
Ignition lock 61
Starting the engine 61
Switching off the engine 62
Handbrake 63
Manual transmission 63
Automatic transmission with Steptronic 64
Turn signal indicator/ Headlamp flasher 67
Washer/Wiper system/ Rain sensor 67
Cruise control 70

Everything under control:
Odometer, outside temperature display 72
Tachometer 73
Energy control 73
Fuel gauge 74
Temperature gauge 74
Service Interval Display 75
Check Control 76
Computer 79
Multi-Information Display MID 80
Digital clock in the MID 81
Computer in the MID 84

Technology for safety and driving convenience:
PDC Park Distance Control 89
Antilock Brake System 90
DSC Dynamic Stability Control 91
xDrive 92
HDC Hill Descent Control 93
Self-leveling suspension 94
2-axle self-leveling suspension 94
Brake Force Display 96

Lamps:
Parking lamps/Low beams 97
Instrument lighting 98
High beams/Standing lamps 98
Fog lamps 98
Interior lamps 99

Controlling the climate for pleasant driving:
Air conditioner 100
Automatic climate control 103
Roller sun blinds 109
Independent ventilation 109

Cabin convenience:
Integrated universal remote control 110
Portable phone 113
Glove compartment 113
Storage compartments 114
Beverage holder 114
Glasses compartment 115
Ashtray, front 115
Ashtray, rear 116
Cigarette lighter, rear 116

Loading and transporting:
Ski bag 117
Cargo area
Fold rear backrests down 118
Roll-up cover 119
Partition net 119
Cover panels in cargo area 121
Power outlets 122
Pull-out cargo floor 122
Loading cargo 124
Roof-mounted luggage rack 126

Contents

Operation, maintenance

Special operating instructions:
Break-in procedures 130
Driving your X5 131
General driving notes 132
Safe braking 132

Wheels and tires:
Tire inflation pressure 134
Tire identification marks 136
Wheel/tire condition 138
Replacing wheels/tires 139
Snow chains 140

Under the hood:
Hood 141
Engine compartment essentials 142
Washer fluid 143
Engine oil 143
Coolant 145
Brake fluid 146

Care and maintenance:
The BMW Maintenance System 147

Laws and regulations:
California Proposition 65 Warning 148
OBD interface socket 148

Owner service procedure

Replacement procedures:
Onboard tool kit 152
Windshield wiper blades 152
Lamps and bulbs 153
Changing a wheel 157
Battery 162
Fuses 163

Assistance, giving and receiving:
Receiving assistance 164
Jump-starting 165
Having vehicle towed 166

Technical data

Engine specifications 170
Dimensions 171
Weights 172
Capacities 173

Index

Everything from A to Z 176

Notes

About this Owner's Manual

We have made every effort to ensure that you are able to find what you need in this Owner's Manual as quickly as possible. The fastest way to find certain topics is by using the detailed index at the end. If you desire an initial overview of your vehicle, this can be found in the first chapter.

Should you want to sell your BMW some day, please remember to hand over the Owner's Manual as well; it is an important component of your vehicle.

Additional sources of information:

If you have any questions, your BMW Sports Activity Vehicle center will be glad to advise you.

You can find information on BMW, e.g. technology, on the Internet at www.bmwusa.com.

Symbols used

Indicates precautions that must be followed precisely in order to avoid the possibility of personal injury and serious damage to the vehicle.

Contains information that will assist you in gaining the optimum benefit from your vehicle and enable you to care more effectively for your vehicle.

Refers to measures that can be taken to help protect the environment.

◀ Marks the end of a specific item of information.

* Indicates special equipment, country-specific equipment and optional extras when available.

Vehicle Memory, Key Memory, refer to page 60. Identifies functions that can be specifically adapted for a particular key or vehicle. These adjustments can be performed either by yourself or by your BMW Sports Activity Vehicle center.

The individual vehicle

On buying your BMW, you have decided in favor of a model with individualized equipment and features. This Owner's Manual describes all models and equipment that BMW offers within the same group.

We hope you will understand that equipment and features are included that you might not have chosen for your vehicle. Sections describing options and special equipment are marked by asterisks * to assist you in identifying possible differences between the descriptions in this manual and your own vehicle's equipment.

If your BMW features equipment which is not described in this Owner's Manual, Supplementary Owner's Manuals are enclosed. We ask you to read these manuals as well.

Online Edition for Part No. 01 41 0 157 897 - © 08/03 BMW AG

Status at time of printing

BMW pursues a policy of continuous, ongoing development that is conceived to ensure that our vehicles continue to embody the highest quality and safety standards combined with advanced, state-of-the-art technology. For this reason, it is possible that the features described in this Owner's Manual could differ from those on your vehicle. Nor can errors and omissions be entirely ruled out. You are therefore asked to appreciate that no legal claims can be entertained on the basis of the data, illustrations or descriptions in this manual.

For your own safety

Fuels:

Use unleaded fuel only. Fuels containing up to and including 10% ethanol or other oxygenates with up to 2.8% oxygen by weight – that is, 15% MTBE or 3% methanol plus an equivalent amount of co-solvent – will not void the applicable warranties respecting defects in materials or workmanship. Field experience has indicated significant differences in fuel quality – volatility, composition, additives, etc. among gasolines offered for sale in the United States and Canada. The use of poor-quality fuels may result in drivability, starting and stalling problems, especially under certain environmental conditions, such as high ambient temperature and high altitude. Should you encounter drivability problems which you suspect could be related to the fuel you are using, we recommend that you respond by switching to a recognized high-quality brand.
Failure to comply with these recommendations may result in unscheduled maintenance.
Obey pertinent relevant safety rules when you are handling gasoline.◀

Maintenance and repair:

Advanced technology, e.g. the use of modern materials and high-performance electronics, requires specially adapted maintenance and repair methods. Therefore, only have corresponding work on your BMW carried out by a BMW Sports Activity Vehicle center or a workshop that works according to BMW repair procedures with correspondingly trained personnel. If work is carried out improperly there is a danger of consequential damage and the related safety risks.◀

Parts and accessories:

For your own safety, use genuine parts and accessories approved by BMW.
When you purchase accessories tested and approved by BMW and Genuine BMW Parts, you simultaneously acquire the assurance that they have been thoroughly tested by BMW to ensure optimum performance when installed on your vehicle.
BMW warrants these parts to be free from defects in material and workmanship.

BMW will not accept any liability for damages resulting from installation of parts and accessories not approved by BMW.
BMW cannot test every product on the market to determine whether it can be used on a BMW safely and without risk to either the vehicle, its operation, or its occupants.
Genuine BMW Parts, BMW Accessories and other products approved by BMW, together with professional advice on using these items, are available from all BMW Sports Activity Vehicle centers.
Installation and operation of non-BMW approved accessories such as alarms, radios, amplifiers, radar detectors, wheels, suspension components, brake dust shields, telephones – including operation of any portable phone from within the vehicle without using an externally mounted antenna – or transceiver equipment such as CB, walkie-talkie, ham radio or similar accessories, may cause extensive damage to the vehicle, compromise its safety, interfere with the vehicle's electrical system or affect the validity of the BMW Limited Warranty. See your BMW Sports Activity Vehicle center for additional information.◀

▷ Maintenance, replacement, or repair of the emission control devices and systems may be performed by any automotive repair establishment or individual using any certified automotive part.◀

Symbol on vehicle parts

Indicates that you should consult the relevant section of this Owner's Manual for information on a particular part or assembly.

Service and Warranty

This manual is supplemented by a Service and Warranty Information Booklet for US models or a Warranty and Service Guide Booklet for Canadian models.

We recommend that you read this publication thoroughly.

Your BMW is covered by the following warranties:

- ▷ New Vehicle Limited Warranty
- ▷ Rust Perforation Limited Warranty
- ▷ Federal Emissions System Defect Warranty
- ▷ Federal Emissions Performance Warranty
- ▷ California Emissions Control System Limited Warranty

Detailed information about these warranties is listed in the Service and Warranty Information Booklet for US models or in the Warranty and Service Guide Booklet for Canadian models.

Online Edition for Part No. 01 41 0 157 897 - © 08/03 BMW AG

Reporting safety defects

The following only applies to vehicles owned and operated in the US.

If you believe that your vehicle has a defect which could cause a crash or could cause injury or death, you should immediately inform the National Highway Traffic Safety Administration NHTSA in addition to notifying BMW of North America, LLC, P.O. Box 1227, Westwood, New Jersey 07675-1227, Telephone 800-831-1117.

If NHTSA receives similar complaints, it may open an investigation, and if it finds that a safety defect exists in a group of vehicles, it may order a recall and remedy campaign. However, NHTSA cannot become involved in individual problems between you, your dealer, or BMW of North America, LLC.

To contact NHTSA, you may either call the Auto Safety Hotline toll-free at 1-800-424-9393 or 366-0123 in Washington, D.C. area or write to: NHTSA, U.S. Department of Transportation, Washington, D.C. 20590. You can also obtain other information about motor vehicle safety from the Hotline.

Online Edition for Part No. 01 41 0 157 897 - © 08/03 BMW AG

Online Edition for Part No. 01 41 0 157 897 - © 08/03 BMW AG

Overview

Controls and features

Operation, maintenance

Owner service procedures

Technical data

Index

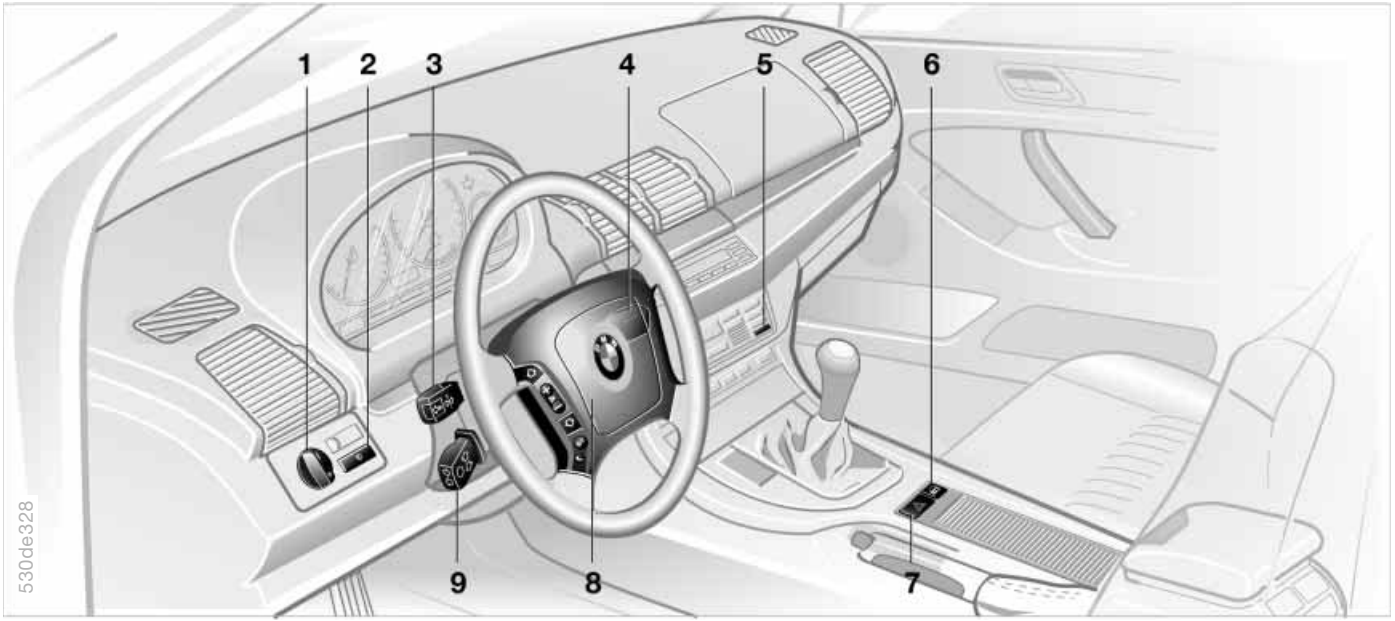

1 Parking lamps/Low beams 97

2 Fog lamps 98

3 ▷ Turn signal indicators 67
▷ Standing lamps 98
▷ High beams 98
▷ Headlamp flasher 67
▷ Computer 79

4 Washer/Wiper system/ Rain sensor 67

5 Rear window defroster 101, 106

6 Central locking system 28

7 Hazard warning flashers

8 Horn: the entire surface

9 Adjusting steering wheel 51

Online Edition for Part No. 01 41 0 157 897 - © 08/03 BMW AG

1 Fuel gauge 74

2 Indicator lamp for turn signal indicators 21

3 Speedometer

4 Indicator and warning lamps 18 to 21

5 Tachometer and Energy Control 73

6 Coolant temperature gauge 74

Instrument cluster X5 3.0i, 4.4i

7 Indicator and warning lamps 18 to 21

8 Reset button for trip odometer 72

9 Indicator for Check Control 76

10 Odometer and trip odometer 72

11 Display for computer – operation via turn signal lever, refer to page 79:
- ▷ Outside temperature
- ▷ Average fuel consumption
- ▷ Cruising range
- ▷ Average speed

12 Service Interval Display 75

13 Selector lever and program display for automatic transmission* 64

14 Indicator and warning lamps 18 to 21

Instrument cluster X5 3.0i, 4.4i*

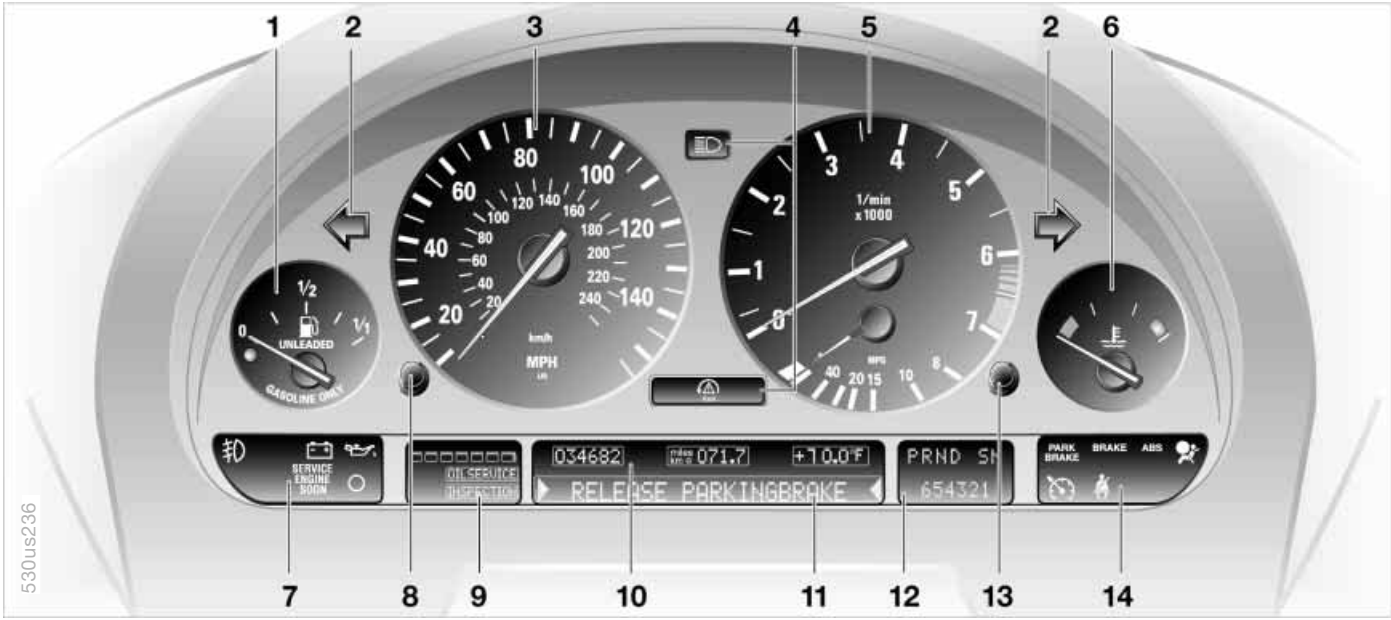

1 Fuel gauge 74
2 Indicator lamp for turn signal indicators 21
3 Speedometer
4 Indicator and warning lamps 18 to 21
5 Tachometer and Energy Control 73
6 Coolant temperature gauge 74
7 Indicator and warning lamps 18 to 21
8 Reset button for trip odometer 72
9 Service Interval Display 75
10 Indicator for
▷ Trip odometer/odometer 72
▷ Outside temperature 72
11 Indicator for Check Control 76
12 Selector lever and program display for automatic transmission* 64
13 CHECK button 76
14 Indicator and warning lamps 18 to 21

Technology that monitors itself

Indicator and warning lamps that are identified by ● are tested for proper functioning whenever the ignition key is turned. They each light up once for different periods of time.

If a fault should occur in one of these systems, the corresponding lamp does not go out after the engine is started or it lights up while the vehicle is moving. You will see how to react to this in the following section.

Red: stop immediately

Battery charge current ●
The battery is not being charged. There is a malfunction of the alternator drive belt or in the charging circuit of the alternator. Please contact the nearest BMW Sports Activity Vehicle center.

If the drive belt is defective, do not continue driving. The engine could be damaged due to overheating. If the drive belt is defective, increased steering effort is also required.◀

Engine oil pressure ●
Stop immediately and switch off the engine. Check the engine oil level; top up as required. If the oil level is correct: please contact the nearest BMW Sports Activity Vehicle center.

Do not continue driving. The engine could be damaged because of inadequate lubrication.◀

BRAKE Handbrake*/
Brake hydraulic system ●
Lights up with handbrake engaged.
For additional information, refer to page 63

Comes on although the handbrake is released: stop immediately. The brake fluid in the reservoir has fallen to below the minimum level. At the same time, a considerably longer brake pedal travel may be noticeable. Please contact the nearest BMW Sports Activity Vehicle center.

During continued driving increased brake pedal pressure may be necessary, and considerably longer braking distances may result. Please remember to adapt your driving style accordingly.◀

Before continuing your journey, be sure to read the notes on pages 132 and 146.

Also comes on in the Check Control with the message CHECK BRAKE LININGS.

Handbrake warning lamp*/
Brake hydraulic system warning lamp for Canadian models.

Transmission temperature* ●
The transmission is overheated. Reduce speed immediately and stop at a suitable location so that the system can cool down again. Please contact the nearest BMW Sports Activity Vehicle center.

Red or yellow: continue to drive cautiously

BRAKE

ABS

4x4

The red brake warning lamp lights up together with the indicator lamps for ABS and DSC/xDrive. In addition, a warning signal sounds:
ABS, DSC and xDrive have failed. Drive may then only be carried out via the rear axle.
Have the system checked at the nearest BMW Sports Activity Vehicle center.
For additional information, refer to page 90, 91

Proceed cautiously and defensively. When driving on poor roads, refrain from using full throttle and avoid pressing the accelerator beyond the kickdown point. Otherwise the drive train may be damaged or accidents can occur.◀

If the brake warning lamp lights up yellow in the described combination, the EBV Electronic brake-force distribution is still available.

Warning lamps for Canadian models.

ABS

4x4

Indicator and warning lamps

Red: an important reminder

Handbrake*
Lights up with handbrake engaged.
For additional information, refer to page 63

Handbrake warning lamp* for Canadian models

Please fasten safety belts ●
Lights up for a few seconds or until occupants fasten safety belts. Depending on model, together with an acoustic signal* or a message* in the Check Control.
For additional information on safety belts, refer to page 48

Airbags ●
Please have the system inspected at your BMW Sports Activity Vehicle center.
For additional information, refer to page 54

Yellow: check as soon as possible

ABS Antilock Brake System ●
The ABS is deactivated due to a fault. Conventional braking performance remains available with no loss of efficiency. Please have the system inspected at your BMW Sports Activity Vehicle center.
For additional information, refer to page 90

ABS warning lamp for Canadian models.

DBC Dynamic Brake Control ●
Fault in the DBC system. Please have the system checked and repaired at your BMW Sports Activity Vehicle center as soon as possible.
For details on DBC, refer to page 90

Warning lamp for Dynamic Brake Control DBC for Canada models

Engine oil level
Comes on while driving: the oil level is at the absolute minimum; refill as soon as possible. Do not drive more than approx. 30 miles/50 km until you do.
For additional information, refer to page 143

Engine oil level
Comes on after the engine has been switched off: add engine oil at your earliest opportunity, e.g. when you stop to refuel.
For additional information, refer to page 143

Automatic transmission*
The automatic transmission switches into the emergency program due to a fault. Please consult the nearest BMW Sports Activity Vehicle center.
For additional information, refer to page 66

Brake pads* ●
Have the condition of the brake pads checked.
For additional information, refer to page 133

Self-leveling suspension* ●
The self-leveling suspension is inactive. Please consult the nearest BMW Sports Activity Vehicle center.
For additional information, refer to page 94

DSC Dynamic Stability Control/ xDrive ●
The warning lamp lights up continuously and a warning signal sounds: DSC or the xDrive all-wheel system has failed.
The stabilizing interventions of DSC or the xDrive 4-wheel drive system are no longer available. Drive may then only be carried out via the rear axle.
Have the system checked at the nearest BMW Sports Activity Vehicle center.
For additional information, refer to page 91

Proceed cautiously and defensively. When driving on poor roads, refrain from using full throttle and avoid pressing the accelerator beyond the kickdown point. Otherwise the drive train may be damaged or accidents can occur.◀

Engine electronics*
Fault in the engine electronics.
You can continue to drive with reduced engine output or engine speed. Please have the system inspected by your BMW Sports Activity Vehicle center.

Service Engine Soon ●
If the indicator lamp lights up continuously or intermittently, there is a fault in the exhaust-relevant electronic systems. Although the vehicle remains operational, you should have the systems checked by your BMW Sports Activity Vehicle center at the earliest possible opportunity.
For additional information, refer to page 148.

Service Engine Soon warning lamp for Canadian models

Check Gas Cap* ●
This indicator lamp comes on when the fuel filler cap is loose or missing.
Close the filler cap tightly: refer to page 24

Green: for your information

Turn signal indicators
Flashes when the turn signal indicators are operated. Rapid flashing indicates a system malfunction.
For additional information, refer to page 67

Cruise control*
Lights up when system is switched on: ready for operation using the buttons in the steering wheel.
For more detailed information, refer to page 70.

Fog lamps
Lights up when fog lamps are switched on. For additional information, refer to page 98

Blue: for your information

High beams
Lights up when the high beams are on or the headlamp flasher is actuated.
For additional information, refer to pages 67 and 98

Buttons on steering wheel*

The buttons integrated in the steering wheel are provided so that you can operate a number of accessories quickly and without being distracted from traffic conditions. You may operate:

- ▷ Selected control functions for the radio along with CD and cassette player
- ▷ The recirculated-air mode of the air conditioner* or the steering-wheel heater*
- ▷ The cruise control
- ▷ Selected phone functions* and
- ▷ the voice command system

▷ In order to operate a system, the corresponding system must be switched on.◀

Press briefly:
Accept incoming call, start dialing, terminate call.
Extended pressure:
Switch voice input on and off.

R/T

Switch between phone and radio, cassette and CD.

Forward:

- ▷ Radio
  Press briefly: next stored station
  Extended pressure: station search function
- ▷ CD
  Press briefly: track search
  Maintain pressure on the button: fast forward in track
- ▷ Cassette
  Press briefly: stop track search or fast forward
  Extended pressure: fast forward
- ▷ Portable phone
  Scroll through list of names.

Reverse: functions as for fast forward.

Volume

Cruise control: call up

Cruise control: store and accelerate + as well as decelerate and store –

I/0

Cruise control: activate/interrupt/ deactivate

Recirculated-air mode and AUC automatic recirculated-air control or steering wheel heater: switch on/off

Online Edition for Part No. 01 41 0 157 897 - © 08/03 BMW AG

Warning triangle*

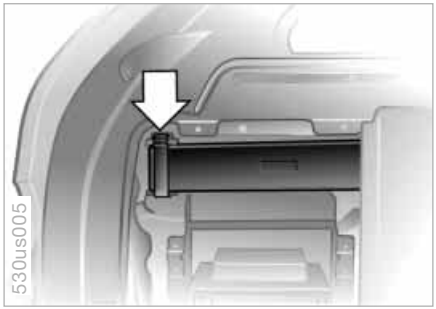

1. Open the cover on the left in the cargo area: lift the handle on the cover
2. Pull the tab of the retaining strap, refer to arrow, and remove the hazard warning triangle from the support bracket
3. To install: slide the hazard warning triangle into the support bracket and press on the retaining strap.

Comply with legal requirements requiring you to carry a hazard warning triangle in the vehicle.◀

First-aid kit*

The first-aid kit is located under the front passenger's seat.

To open: pull the handle and fold the cover down.

To close: fold the cover up.

Some of the articles in the first-aid kit may be used within a limited time only. For this reason, check the expiration dates of each of the items regularly, and replace any whose expiration dates have passed. You can acquire replacements in any drugstore or pharmacy.
Always observe all legal regulations requiring a first-aid kit to be carried in the vehicle.◀

Refueling

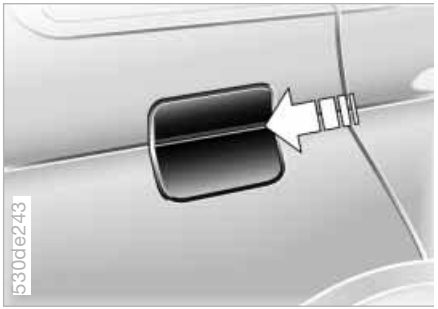

Fuel filler door

Before filling the tank, switch off the engine. If you do not, fuel cannot be filled into the tank and the Service Engine Soon lamp may come on.◀

To open the fuel filler door, press on the front edge.

In the event of an electrical malfunction, you can also open the fuel filler door manually:

1. Open the cover on the right in the cargo area: lift the handle on the cover
2. Pull the knob with the fuel pump symbol.

When handling fuels, comply with all of the applicable safety precautions and regulations pertaining to fuels. Never carry spare fuel containers in your vehicle. Whether empty or full, these containers can leak, cause an explosion, or lead to fire in the event of a collision.◀

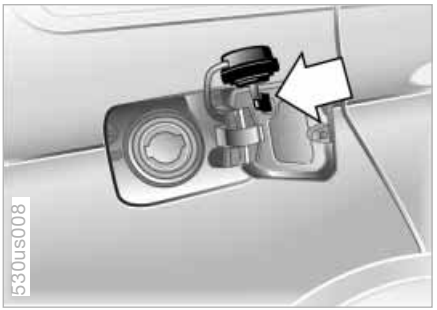

Simple and environmentally friendly

Open the filler cap carefully to prevent fuel from spraying out. Fuel spray may cause injury.
Do not top off. Topping off may cause fuel spillage.◀

Keep the filler cap in the bracket attached to the fuel filler door.

When refueling, insert the filler nozzle completely into the filler pipe. Pulling the nozzle out of the pipe during refueling

▷ results in premature pump shutoff
▷ and will reduce the effect of the vapor recovery system on the pump.

As long as the filler nozzle is used properly, the fuel tank is full whenever the nozzle shuts off the first time.

Close the filler cap carefully after refueling until a click is heard. While closing, be sure not to squeeze the strap which is fastened to the cap. A loose or missing cap will activate the message – CHECK GAS CAP – in the Check Control* or the Check Gas Cap lamp*.◀

Tank capacity:
Approx. 24.6 gal./approx. 93 liters, with a reserve capacity of
6-cylinder engine: approx. 2.0 gal./ approx. 8 liters
8-cylinder engine: approx. 2.5 gal./ approx. 10 liters.

Never attempt to continue driving until the tank is completely empty, as engine functions could be affected, and the vehicle could sustain damage as a result.◀

Online Edition for Part No. 01 41 0 157 897 - © 08/03 BMW AG

Fuel specifications

The engine uses lead-free fuel only.

Required fuel:

▷ Premium Unleaded Gasoline, min. 91 AKI.

AKI = Anti Knock Index

⚠ Do not use leaded fuels. The use of leaded fuels will cause permanent damage to the system's oxygen sensor and the catalytic converter.◀

Online Edition for Part No. 01 41 0 157 897 - © 08/03 BMW AG

Online Edition for Part No. 01 41 0 157 897 - © 08/03 BMW AG

Overview

Controls and features

Operation, maintenance

Owner service procedures

Technical data

Index

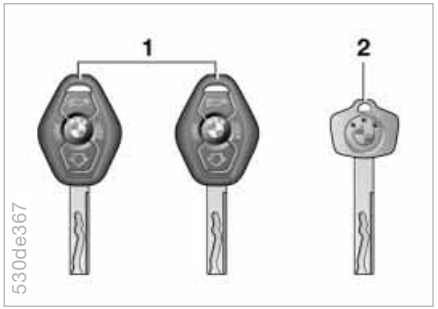

The key set

1 Central key with remote control, determine the functions of the Key Memory, refer to page 60.
You can mark the keys with remote control using the colored labels you received on taking delivery of the vehicle

▷ Each central key with remote control contains a long-life battery. The battery is automatically charged in the ignition lock while the vehicle is being driven.
If you have any central keys with remote control that are not used on a regular basis, you should therefore remember to recharge these units by using them to drive the vehicle for an extended period at least once a year, refer to page 29.◀

2 Spare key for storage in a safe place, such as in your wallet.
This key cannot be used to open the lock for the glove compartment. This is an advantage in a hotel, for example.

Central locking system

The concept

The central locking system is ready for operation as soon as you close the front doors. The system engages or releases the locks on the

▷ doors
▷ liftgate/tailgate
▷ fuel filler door.

The central locking system can be operated

▷ from outside via the remote control as well as via the driver's door lock
▷ from inside via the button for the central locking system.

If the system is locked from inside, the fuel filler door remains unlocked, refer to page 33.

When the system is actuated from outside of the vehicle, the anti-theft system is actuated simultaneously. This prevents the doors from being unlocked via safety lock buttons or door handles. The alarm system is also armed or disarmed.

In an accident, the central locking system automatically unlocks, however only doors that were not locked separately with the lock buttons, refer to page 33. The hazard warning flashers and interior lamps are also switched on.

Using the remote control

The remote control makes opening and locking the doors of your vehicle very convenient. Furthermore it provides three additional functions that can only be executed via the remote control:

- ▷ Switching on the interior lamps, refer to page 30.
  With this function, you can also search for your vehicle – when parked in an underground garage, for instance
- ▷ Opening the liftgate, refer to page 30.
  The liftgate will open slightly, regardless of whether it was previously locked or unlocked
- ▷ Panic mode, refer to page 30.
  In case of danger you can start the alarm.

Whenever you unlock or lock the vehicle, you simultaneously deactivate/activate the anti-theft system, disarm/arm the alarm system and switch the interior lamps on/off.

You can have an acknowledgment signal set to confirm that the vehicle is correctly locked.◀

Since passengers or animals remaining in the vehicle might be able to lock the doors from the inside, take the vehicle's keys with you so that the vehicle can be opened again from the outside at any time.◀

If it is no longer possible to lock the vehicle via the remote control, the battery is discharged. Use this key while driving for an extended period in order to charge the battery. Protect the remote control against unauthorized use by handing over only the spare key, for example when using hotel valet parking, refer to page 28.
In the event of a system malfunction, please contact your BMW Sports Activity Vehicle center, which is also your source for replacement keys.◀

1 Unlocking and convenience opening
2 Locking and securing, switching on interior lamps, switching off tilt alarm sensor and interior motion sensor
3 Opening the liftgate, panic mode

Opening and closing: from outside

Unlocking the vehicle

Press button.

Press the button once to unlock the driver's door and the fuel filler door only; press a second time to unlock all remaining doors as well as the liftgate/tailgate.

Convenience opening mode

Press and hold button. The windows and the glass roof open.

Locking and securing

Press button.

Switching on the interior lamps

If the vehicle is locked, press button.

Switching off the tilt alarm sensor and interior motion sensor

Press button once again directly after locking.
For more detailed information, refer to page 38.

Opening the liftgate

Press button.

The liftgate will open slightly, regardless of whether it was previously locked or unlocked.

▷ If the vehicle is locked, the liftgate/tailgate is also locked again when closed.
Before and after a trip, be sure that the liftgate/tailgate was not opened unintentionally.◀

Panic mode – triggering alarm

By pressing and holding the button for more than two seconds, you can start the alarm system if there is an impending danger if it is armed.

To switch off the alarm

Press button.

Online Edition for Part No. 01 41 0 157 897 - © 08/03 BMW AG

Malfunctions

The remote control system may be affected by other units or equipment operating in the immediate vicinity of your vehicle.

Should the remote control fail to operate owing to interference of this kind, you can respond by using the central key to unlock your vehicle at one of the doors.

For US owners only

The transmitter and receiver units comply with part 15 of the FCC – Federal Communication Commission – regulations. Operation is governed by the following:

FCC ID: LX8EWS
LX8FZVS
LX8FZVE

Compliance statement:
This device complies with part 15 of the FCC Rules. Operation is subject to the following two conditions:

▷ This device may not cause harmful interference, and
▷ this device must accept any interference received, including interference that may cause undesired operation.

▷ Any unauthorized modifications to these devices could void the user's authority to operate this equipment.◀

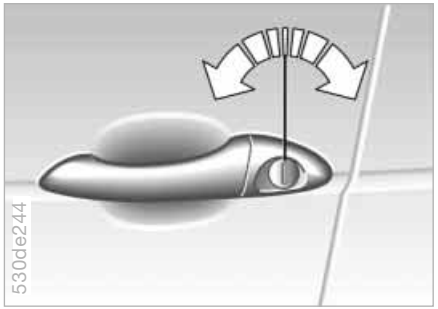

Using the door lock

One turn of the key in the driver's door lock unlocks the driver's door only. Turning the key a second time unlocks all of the remaining doors, the liftgate/ tailgate and the fuel filler door.

You can have an acknowledgment signal set to confirm that the vehicle is correctly locked.◀

Convenience operation

You also have the option of operating the windows and the glass roof from the door lock.

▷ To open: with the door closed, turn the key to the Unlock position and hold it there

▷ To close: with the door closed, turn the key to the Lock position and hold it.

Watch during the closing process to be sure that no one is injured. Releasing the key stops the operation.◀

Manual operation

In the event of an electrical malfunction, turn the key to the extreme left or right to unlock/lock the door.

You can operate the central locking system with this button when the driver's door is closed. The doors and liftgate are unlocked or locked only. However, the anti-theft system is not activated. Also, the fuel filler door remains unlocked to allow refueling.

You have the option of setting the central locking system to lock automatically as soon as you move off. This can be adjusted to be key-specific.◀

If only the driver's door was unlocked from the outside and you press the button

▷ all other doors, the liftgate/tailgate and the fuel filler door will be unlocked when the driver's door is opened

▷ the driver's door will be locked again when it is closed.◀

Unlocking and opening the doors

▷ Either unlock the doors together with the button for the central locking system and then pull the door handle above the armrest or

▷ pull the door handle for each door twice: the first pull unlocks the door, and the second one opens it.

Locking

▷ Use the central locking button to lock all of the doors simultaneously, or

▷ press down the individual safety lock buttons. As an added design feature to prevent the driver from being inadvertently locked out of the vehicle, the driver's safety lock button will not engage as long as the door is open.

When the vehicle is moving, do not lock the doors with the safety lock buttons. Doors locked in this manner would not unlock automatically in the event of an accident.
Since passengers or animals remaining in the vehicle might be able to lock the doors from the inside, take the vehicle's keys with you so that the vehicle can be opened again from the outside at any time.◀

Online Edition for Part No. 01 41 0 157 897 - © 08/03 BMW AG

Opening from outside

Press the button, refer to arrow:
The liftgate opens slightly.

The cargo area is illuminated whenever the liftgate is opened, refer also to page 99.

▷ With the liftgate open the dimension from the ground to the upper edge is more than 6.6 ft/2 m. Please remember this, e.g. when the liftgate is opened in a garage.◀

Opening from inside

Press this button to open the liftgate when the vehicle is stationary.

⚠ If pointed or sharp-edged objects could strike the rear window while driving, be sure to provide protection around all edges. If you do not do this, the heating conductors of the rear window could be damaged.◀

For information on the cargo area cover and on other details in the cargo area, refer to Cargo area, beginning on page 118.

Manual release

In the event of an electrical malfunction, you can release the liftgate manually:

1. Remove the plastic plug from inside the cargo area and pull toward the interior, refer to arrow. The liftgate will be released
2. Reinstall the plug.

Liftgate

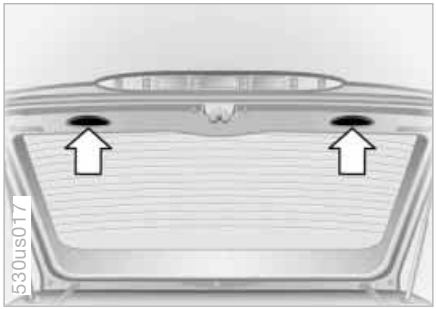

Closing

You can pull the liftgate down by placing both hands in the handle recesses, refer to arrows.

To close the liftgate, merely press it down gently. The closing process will then be carried out automatically.

To avoid injuries, be sure that the travel path of the liftgate is clear when it is closed, as with all closing procedures.◀

Operate the vehicle only when both gates are completely closed. Otherwise, exhaust fumes could penetrate the interior of the vehicle. Should it be absolutely necessary to operate the vehicle with an open gate:

▷ Close all windows and the glass roof

▷ Increase the air supply for the air conditioner or automatic climate control to a high level, refer to page 101 or 105.◀

Tailgate

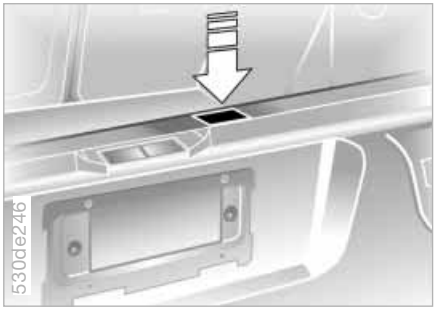

Opening

Press the button:
You can fold the tailgate down.

When opened, the tailgate can accept loads of up to 440 lbs/ 200 kg. When the vehicle is stationary you may, for example, utilize the tailgate as a seat or as a loading platform for luggage or recreation gear.◀

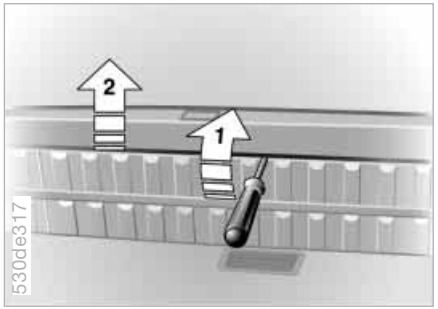

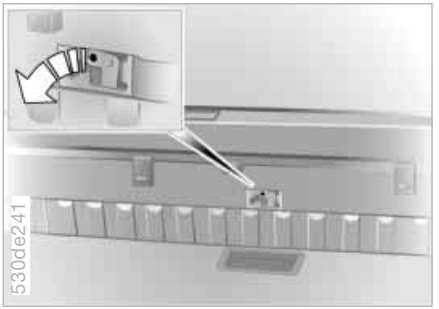

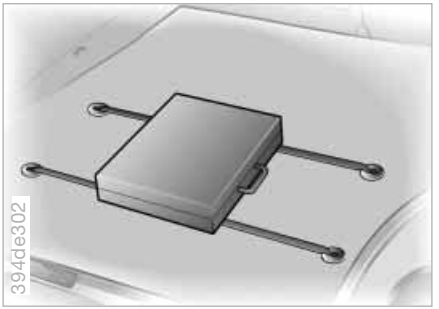

Manual release

In the event of an electrical malfunction, you can release the tailgate manually:

1. Unfasten the trim panel clip with the vehicle key or with a screwdriver, refer to arrow 1, and remove it toward the top, refer to arrow 2
2. Using the same tool, press the latch in the direction of the arrow; the tailgate is released
3. Reinstall the trim panel.

Luggage straps

Use the luggage straps on the cargo floor cover to secure smaller items of luggage.

Movement is reduced when objects are placed on the straps.

The lashing eyes located at the corners of the cargo area provide you with a convenient means of attaching luggage nets* or flexible straps for securing luggage.

Refer also to Stowing cargo on page 125.

The concept

The vehicle alarm system responds:

- ▷ When a door, the hood, or the liftgate is opened
- ▷ To movement in the vehicle's interior – interior motion sensor
- ▷ To variations in the vehicle tilt angle such as occur during attempts to steal the wheels or tow the vehicle
- ▷ To interruption of battery voltage.

The system responds to unauthorized vehicle entry and attempted theft by simultaneously activating the following:

- ▷ Sounding an acoustical alarm for 30 seconds
- ▷ The hazard warning flashers are activated for approx. five minutes
- ▷ The high beams flash on and off in the same rhythm.

Arming and disarming the alarm system

When you lock or unlock the vehicle, either with the remote control or at the door lock, the alarm system is armed or disarmed at the same time.

You can have different acknowledgment signals set to confirm arming and disarming.◀

You can also open the liftgate with the system armed using the button on the remote control, refer to page 30.
When you close the liftgate, the system is rearmed.
Pressing the Panic mode button for a longer period triggers the alarm, refer to page 30.

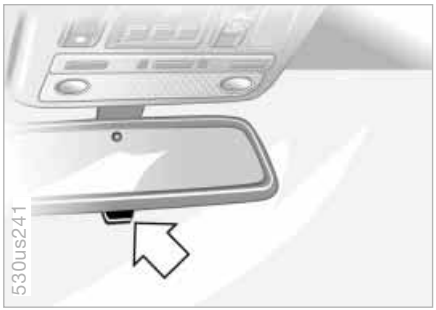

Indicator lamp displays

- ▷ The indicator lamp below the interior rearview mirror flashes continuously: the system is armed
- ▷ The indicator lamp flashes during arming: the door(s), the hood or liftgate are not completely closed. Even if you do not close the alerted area, the system begins to monitor the remaining areas, and the indicator lamp flashes continuously after 10 seconds. However, the interior motion sensor is not activated
- ▷ The indicator lamp goes out when the system is disarmed: no manipulation or attempted intrusions have been detected in the period since the system was armed

Online Edition for Part No. 01 41 0 157 897 - © 08/03 BMW AG

▷ The indicator lamp flashes for 10 seconds when the system is disarmed: an attempted entry has been detected in the period since the system was armed.

Following triggering of an alarm, the indicator lamp will flash continuously.

Avoiding unintentional alarms

The tilt alarm sensor and interior motion sensor may be switched off at the same time. You can do this to prevent a false alarm from being triggered in garages with elevator ramps, for instance, or when the vehicle is transported by trailer or train:

Lock the vehicle twice, i.e. arm the system. Press button of the remote control twice in succession or actuate the locks twice with the key.
The indicator lamp lights up briefly and then flashes continuously. The tilt alarm sensor and the interior motion sensor are switched off as long as the system is armed.

Interior motion sensor

In order for the interior motion sensor to function properly, the windows and glass roof must be completely closed.

However, be sure to switch off the interior motion sensor – refer to the previous column – when

▷ you leave children or animals in the vehicle
▷ the windows or glass roof are to remain open.

Power windows

Opening and closing windows

From ignition key position 1:

▷ Press the switch up to the resistance point:
The window continues to move as long as you continue to hold the switch
▷ Press the switch beyond the resistance point:
The window moves downward automatically. Briefly press the switch again to stop the opening movement.

You can close the windows in the same manner by pulling the switch.

Online Edition for Part No. 01 41 0 157 897 - © 08/03 BMW AG

After the ignition has been switched off:

▷ You can still operate the windows as long as neither of the front doors has been opened. To open the windows, press the switch beyond the resistance point.

⚠ Remove the key from the ignition lock and close the doors when you leave the vehicle so that children cannot operate the power windows and possibly injure themselves.◀

For the convenience mode via the remote control or the door lock, refer to pages 30, 32.

Safety feature

A contact strip is integrated into the inner side of each of the upper window frame sections. If pressure is exerted against this contact strip while a window is being raised, the system will respond by stopping the window and then retracting it a small distance.

⚠ Despite this safety feature, be extremely careful that the closing path of the window is not obstructed whenever it is closed. Otherwise, an object might not touch the contact strip in some situations, with very thin objects, for instance.
You can override this safety feature by pulling the switch beyond the resistance point and holding it.
Because the power windows are sealed at high pressure to prevent wind noise when closed, a powerful motor is required for efficient closing. When closing the windows, always ensure that they are not obstructed in any way. Unsupervised use of these systems can result in serious personal injury.
Remove the ignition key to deactivate the electric power windows whenever you leave the vehicle. Never leave the keys in the vehicle with unsupervised children. Never place anything that could obstruct the driver's vision on or next to the windows.◀

Safety switch

With the safety switch, you can prevent the rear windows from being opened or closed via the switches in the rear passenger area, by children, for example. You can also prevent adjustments of the power rear-seat backrests from the rear passenger area, refer to page 47.

⚠ Press the safety switch whenever children are riding in the rear of the vehicle. Careless use of the power windows can lead to injury.◀

Online Edition for Part No. 01 41 0 157 897 - © 08/03 BMW AG

Glass roof, electric*

To prevent injuries, exercise care when closing the glass roof and keep it in your field of vision until it is shut.
Before leaving the vehicle, switch off the electric glass roof mechanism by removing the ignition key. Do not leave children unattended in the vehicle with access to vehicle keys. Use of the key can result in starting of the engine and operation of vehicle systems such as the power glass roof, etc. Unsupervised use of these systems can result in serious personal injury.◀

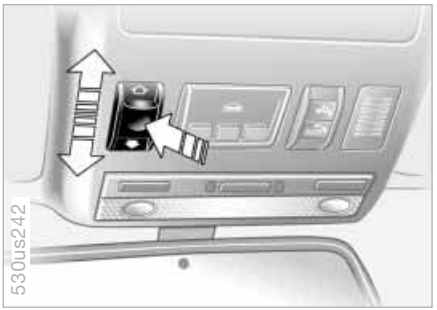

Lifting – opening – closing

From ignition key position 1, press the switch or slide it in the desired direction until you feel resistance.

The headliner slides back somewhat when you raise the glass roof. When the glass roof is opened the headliner retracts with it. It remains open, and it is possible to slide it back and forth as long as the glass roof is not completely open.

The headliner cannot be closed with the glass roof in its raised position.◀

After the ignition has been switched off, you can still operate the glass roof for approx. 15 minutes as long as neither of the front doors has been opened.

For the convenience mode via the remote control or the door lock, refer to pages 30, 32.

Automatic* opening and closing

Press the switch briefly past the resistance point and then release it.

Other automatic operations are:

▷ With the roof open, briefly press the switch in the Raise direction: the roof rises to its tilt-up end position.

Pressing the switch again briefly stops the motion.

▷ With the glass roof raised, hold the switch toward Open until the roof has reached the desired position.

Online Edition for Part No. 01 41 0 157 897 - © 08/03 BMW AG

Safety feature

If the glass roof encounters resistance

▷ when it is closing from the raised position
▷ when closing at a point roughly past the middle of its travel

the closing cycle is interrupted and the glass roof will open again slightly.

⚠ Despite this safety feature, be extremely careful that the closing path of the glass roof is not obstructed whenever it is closed. Otherwise, triggering the closing-force limitation may not be ensured in some situations, with very thin objects, for instance. You can disable this safety feature by pressing the switch beyond the resistance point and holding it.◀

Power loss

When the battery is disconnected, for instance, the glass roof may only lift. To reinitialize the mechanism:

1. Raise the glass roof completely
2. Press and hold the switch for approx. twenty seconds.

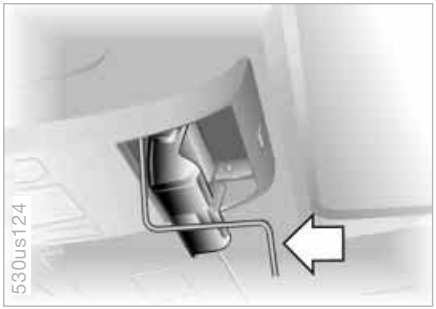

Manual operation

In the event of an electrical malfunction, you can operate the glass roof manually:

1. Open the glasses compartment, refer to page 115
2. Insert the Allen wrench from the vehicle tool kit, refer to page 152, in the opening provided and turn the glass roof in the desired direction.

The ideal sitting position can make a vital contribution to relaxed driving that is as fatigue-free as possible. The sitting position also plays an important role together with the safety belts and airbags in providing occupants with maximum levels of passive safety in an accident. To ensure that the safety systems operate with optimized efficiency, we strongly urge you to observe the instructions contained in the following section.

For additional information on transporting children safely, refer to page 56.

Sitting safely with airbags

Always maintain an adequate distance between yourself and the airbags. Always hold the steering wheel by its rim with hands at the 9 o'clock and 3 o'clock positions to minimize the risk of injuries to your hands and arms in the event of airbag deployment.
No one and nothing is to come between the airbags and the seat occupant. Do not use the cover of the front airbag on the front passenger side as a storage area. Make sure that the front passenger is correctly seated and does not rest feet or legs on the instrument cluster, otherwise leg injuries can occur if the front airbags are triggered. Never let an occupant's head rest near or on a side airbag because the inflating airbag could cause a serious or fatal injury.◀

Even if you adhere to all the instructions injuries resulting from contact with airbags cannot be fully excluded, depending on the circumstances. The ignition and inflation noise may provoke a mild – usually temporary – hearing loss in extremely sensitive individuals.

For airbag locations and additional information on airbags, refer to page 54.

Sitting safely with safety belts

Fasten your safety belt before starting any trip. Airbags complement the safety belt as an additional safety device, but they do not represent a substitute.

Your vehicle has five seats that are all equipped with a safety belt.

At all times, occupants should sit upright and be properly restrained – infants and small children in appropriate child-restraint systems; larger children and adults using the safety belts. Even pregnant women should also always wear the safety belt and especially ensure that the lap belt is positioned low on the hip and does not press on the lower body.
Only one person should ever wear a safety belt, and infants and children may not be seated on the lap of another passenger.
Do not route the belt across your neck, or run it across sharp edges. Be sure that the belt does not become caught or jammed. Avoid twisting the belt while routing it firmly across the hips and shoulder. Do not allow the belt to rest against hard or fragile objects. Otherwise, in the event of a frontal impact, a loose lap belt could slide over your hips, leading to abdominal injury. Avoid wearing clothing that prevents the belt from fitting properly and pull the lap belt periodically to readjust the tension across your shoulder in order to avoid a reduction in the retention effect of the safety belt.◀

For instructions on operating the safety belt, refer to page 48.

Online Edition for Part No. 01 41 0 157 897 - © 08/03 BMW AG

Note before adjusting

Never try to adjust your seat while operating the vehicle. The seat could respond with unexpected movement, and the ensuing loss of vehicle control could lead to an accident. Never ride with the backrest reclined to an extreme horizontal angle – especially important for front passengers to remember. If you do so there is a risk that you will slide under the safety belt in an accident, thus reducing the protection provided by the safety belt.◀

Seat adjustment

▷ Mechanical seat adjustment, refer to following columns
▷ Power seat adjustment, refer to page 45
▷ Head restraints, refer to page 46
▷ Power rear-seat backrest adjustment, refer to page 47.

Mechanical seat adjustment

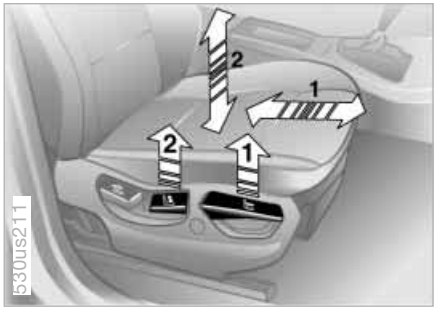

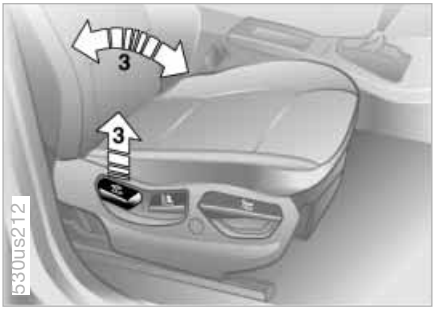

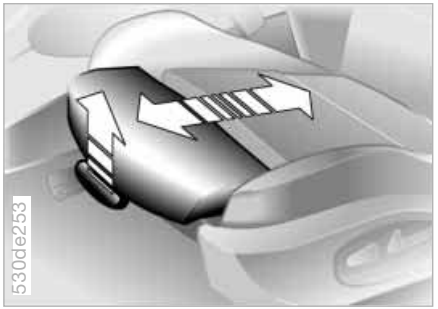

Seat adjustment

1 Backward/forward direction
Pull the lever and slide the seat to the desired position.
After you release the lever, move the seat forward or backward slightly so that it engages fully

2 Height
Pull the lever and apply weight to or remove weight from the seat as required

3 Backrest
Pull the lever and apply weight to or remove weight from the backrest as required

⚠ Comply with the adjustment instructions on page 42. Failure to do so could result in diminished personal safety.◀

Sports seat* adjustment

You can adjust the thigh support additionally:

Pull the lever and adjust the position of the thigh support for your personal comfort.

Online Edition for Part No. 01 41 0 157 897 - © 08/03 BMW AG

Seat adjustment

1 Angle

2 Backward/forward adjustment

3 Cushion height

4 Backrest angle

Adjust the head restraint manually, refer to page 46.

Comply with the adjustment instructions on page 42. Failure to do so could result in diminished personal safety.◀

Comfort seat* adjustment

This seat allows you to make additional adjustments for

1 Lumbar support

2 Shoulder support

3 Head restraint height

Lumbar support:

You can adjust the backrest's contour for additional support in the curvature of your spine's lumbar region.

The upper hips and spinal column receive supplementary support to help you maintain a relaxed, upright sitting position.

▷ Press the front or rear of the switch: Increase or decrease curvature

▷ Press the upper or lower end of the switch: Increase the upper or lower curvature.

Power seat adjustment*

Shoulder support:

Move the switch in the direction of the arrow to adjust the tilt angle of the upper backrest section.

You can use the adjustable upper backrest for supplementary support in the shoulder region. This provides a relaxed sitting position and helps relieve stress on the shoulder muscles.

For optimum adjustment the following is recommended:

Driver and front passenger:

1. Adjust the upper backrest section to its extreme rear position
2. Adjust for the optimal sitting position, refer to page 42
3. Bring the upper backrest section further forward until your shoulders are well supported.

Front passenger's seat adjusted for relaxed traveling:

1. Adjust the upper backrest section to its extreme rear position
2. Tilt the backrest down to a slightly more horizontal angle
3. Bring the upper backrest section forward until your shoulders are well supported.

Make corrections in the forward/backward adjustment of the seat to ensure that the safety belt still fits firmly against your body. If you do not do this, the protection provided by the safety belt may be reduced.◀

Head restraint height:

Move the switch in the desired direction.

Head restraints

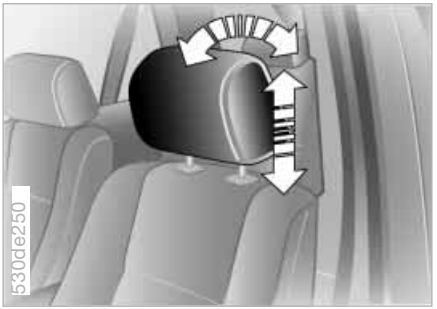

Adjustment

To adjust the angle of the front head restraints, tilt the head restraint to the desired angle.

To adjust the height of the front or rear head restraints, pull the head restraint up or push it down.
Power height adjustment, refer to page 45.

Adjust the head restraint so that its center is approximately level with your ears, otherwise the risk of spinal injury in the event of an accident will increase.◀

Head restraints

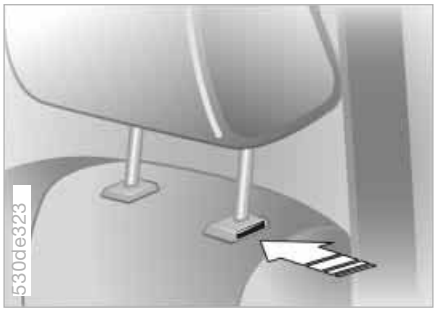

Removal – front

1. Pull the head restraint upward to the stop
2. Press the button, refer to arrow, and remove the head restraint.

Installation – front

1. Press the button, refer to arrow, and insert the head restraint into the guides
2. Adjust the head restraint for your personal comfort.

Removal and installation – rear

To remove the head restraint, pull it outward with a firm movement.
To install it, press it down firmly.

Power rear-seat backrest adjustment*

You can make separate adjustments of the backrest tilt angle on the right and left sides.
You can select a comfortable sitting position and also increase the capacity of the cargo area by moving the backrests into their most upright position.

From the rear seats: press the corresponding switch.

▷ You can prevent adjustments of the power rear-seat backrest from the rear passenger area with the safety switch for the power windows, refer to page 39.◀

From the cargo area: the switches are located on both sides of the cargo area.

Put on the safety belt before each trip, as the airbags supplement the safety belts as an additional restraint device, however they do not replace them.

Locking

Make sure you hear the latch plate engage in the belt buckle.

Warning lamp Please fasten safety belts:
Lights up for a few seconds or until safety belts are locked. Depending on model, together with an acoustic signal* or a message* in the Check Control.

Unlocking

1. Press the red button in the buckle
2. Hold the belt firmly
3. Guide the belt back into its reel.

In the rear, the belt buckle with the word CENTER is intended exclusively for passengers sitting in the middle.
If it is not possible to extract the center belt, this indicates that the larger back-rest is not securely locked, refer to page 118.◀

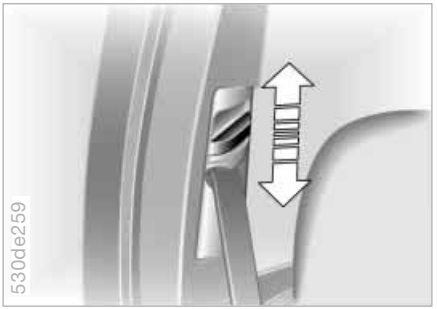

Safety belt height adjustment

You can adjust the safety belts to fit your own physical dimensions by using the safety belt height adjustment:

Slide the button up or down as required.

Also observe the instructions on adjusting the seats on page 42.

In the event of loads caused by accidents or other damage:
Have the belt system, including the belt tensioners and any child-restraint systems, replaced by a BMW Sports Activity Vehicle center and have the belt anchor points checked.◀

Seat, mirror and steering wheel memory*

You can store and call up three different seat, exterior mirror and steering wheel positions. The illustration shows the buttons on the seat for making these position adjustments.

The adjustment of the lumbar support is not stored in the memory.◀

Storing

1. Turn the ignition key to position 1 or 2
2. Adjust the desired positions for the seat, exterior mirror and steering wheel
3. Press the MEMORY button: the indicator lamp in the button comes on
4. Press memory button 1, 2 or 3, as desired: the indicator lamp goes out.

Calling up a stored setting

Do not call up a position from the memory while the vehicle is moving. There is a risk of accident from unexpected movement of the seat or steering wheel.◀

Convenience function:

1. Open the driver's door after unlocking the vehicle or place the ignition key in position 1
2. Briefly press memory button 1, 2 or 3, as desired.
   Movement stops immediately when one of the seat-adjustment or memory buttons is activated during the adjustment process.

Security function:

1. With the driver's door closed and the ignition key either removed or in position 0 or 2
2. Maintain pressure on the desired memory button 1, 2 or 3 until the adjustment process is completed.

If you press the MEMORY button accidentally: press the button a second time – the indicator lamp goes out.◀

Seat, mirror and steering wheel memory*

You can have your vehicle programmed to automatically dial in your own individual adjustment settings for the seat, mirror and steering wheel whenever you use your personal remote control to unlock the vehicle.◀

If you make use of this adjustment, be sure that the footwell behind the driver's seat is unobstructed before unlocking the vehicle. If you fail to do so, any persons or objects behind the seat could be injured or damaged by a rearward movement of the seat.◀

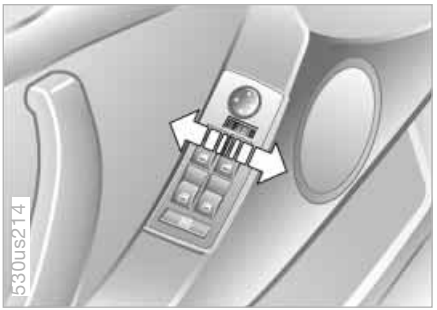

Passenger side exterior mirror tilt function

Automatic curb monitor

1. Select the driver's mirror via the switch
2. When you engage reverse gear or selector-lever position R, the exterior mirror on the front passenger side tilts downward slightly to help the driver monitor the area directly adjacent to the vehicle during parking – curbs, etc.

You can deactivate this automatic feature by setting the mirror selector switch to the passenger side position.

Heated seats*

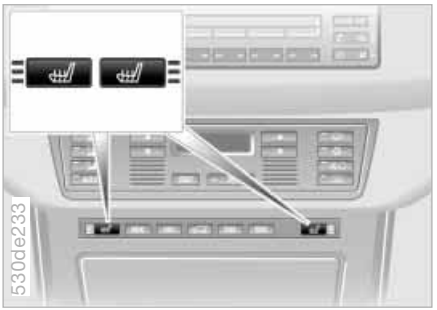

Front

The seat cushion and backrest can be heated when the ignition key is in position 2.

You can call up different heating modes by repeatedly pressing the button.

You can also switch the higher heating modes off directly:
Press the button and hold it slightly longer.

Online Edition for Part No. 01 41 0 157 897 - © 08/03 BMW AG

Heated seats*

Rear

The operating concept is the same as for the front heated seats. You can select between two heating modes.

Steering wheel

Adjustment

The steering wheel can be moved in any of four directions. Adjust the steering wheel by moving the control lever in the desired direction.

Do not adjust the steering wheel while the vehicle is moving. There is a risk of accident from unexpected movement.◀

To store the steering wheel setting, refer to Seat, mirror and steering wheel memory on page 49.

Automatic steering wheel adjustment

only in conjunction with seat, mirror and steering wheel memory

In order to make it easier to get into and out of the vehicle, the steering wheel automatically moves into the top position and returns to the driving or memory position.

This automatic feature is controlled by the position of the ignition key and by the driver's door.

Steering wheel heater*

Steering wheel heater functions in ignition key position 2.

Press the button to activate or deactivate this system.

The indicator lamp within the button lights up when the steering wheel heater is in operation.

If your vehicle is not equipped with steering wheel heater, the switch for the recirculated-air mode is located here, refer to page 22.

Mirrors

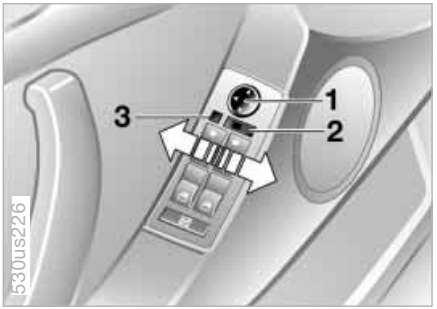

Adjusting exterior mirrors

1 Mirror switch for 4-way adjustment

2 Left/right selector switch

3 Button* for folding mirrors in and out

By pressing button 3 repeatedly, you can fold the mirrors in and out. This is, for example, advantageous in car washes, narrow streets or for bringing a mirror folded forward into the proper position again.

▷ Folding in is possible up to a speed of approx. 6 mph/10 km/h.◀

⚠ Before going through a car wash, fold the exterior mirrors inward manually, or with button 3, otherwise they could be damaged, depending on the width of the car wash system.◀

Adjusting manually

You can also adjust the mirrors manually:
Press on the outer edges of their lenses.

To store the mirror settings, refer to Seat, mirror and steering wheel memory on page 49.

Convex mirror

⚠ The passenger-side mirror features a convex lens. When estimating the distance between yourself and other traffic, bear in mind that the objects reflected in the mirror are closer than they appear. This means that estimations of the distance to following traffic should not be regarded as precise.◀

Self-defrosting mirrors

Both mirrors are defrosted automatically when the ignition key is in position 2.

Interior rearview mirror

To reduce glare from vehicles behind you when you are driving at night, tilt the mirror by turning the button.

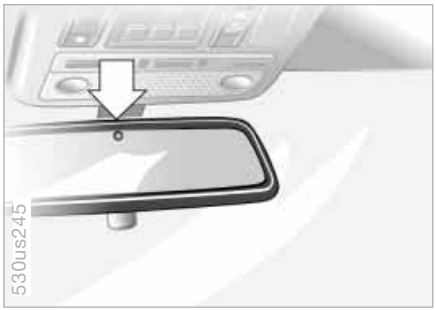

Interior and exterior mirrors, automatic dimming feature*

These mirrors automatically dim through an infinitely-variable range. They automatically revert to their undimmed mode whenever the gear-shift lever or the selector lever is placed in Reverse.

There are two photocells located in the interior rearview mirror for this purpose. One photocell is in the mirror glass, refer to arrow, while the other is offset somewhat on the back of the mirror.

For trouble-free operation, keep the photocells clean and do not cover the area between the interior rearview mirror and the windshield. Do not attach any kind of stickers on the wind-shield in front of the mirror, either.

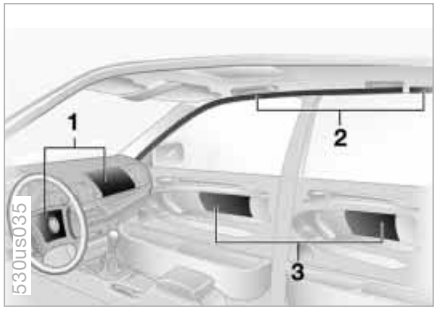

1 Front airbags for driver and front passenger
2 Side Impact Head Protection System for front and rear
3 Side airbags for front and rear*

Protective effect

The front airbags supplement the safety belts by helping to provide additional protection for the front-seat occupants in the event of a severe frontal impact in which the protection afforded by the safety belts alone may no longer be sufficient. The Side Impact Head Protection System and the side airbags help provide protection in the event of a side impact. Each of the side airbags is designed to help support the upper body.

For information on the correct sitting position, refer to page 42.

▷ The airbags do not deploy in response to minor accidents or rear collisions, nor do they respond to certain kinds of vehicle rollover.◀

⚠ Do not apply adhesive materials to the cover panels of the airbags, cover them or modify them in any other way. Do not attempt to remove the airbag restraint system from the vehicle. If you note any indication of system malfunction, if you desire to have an airbag deactivated, or if the airbags are triggered in response to an accident, you should always entrust all inspection, repair and dismantling operations exclusively to your BMW Sports Activity Vehicle center. Do not modify or tamper with either the wiring or the individual components in the airbag system. These include the padded steering wheel hub, the instrument cluster, the side trim panels of the front or rear doors and the roof pillars or the sides of the headliner. Do not remove or dismantle the steering wheel yourself. To ensure compliance with official safety regulations, entrust disposal of airbag generators to a BMW Sports Activity Vehicle center. Unprofessional attempts to service the system could lead to failure in an emergency or undesired airbag activation, either of which could result in personal injury. Do not touch the individual components directly after the system has been triggered, as otherwise there is a danger of burns.◀

⚠ At all times, occupants should sit upright and be properly restrained – infants and small children in appropriate child-restraint systems; larger children and adults using the safety belts. Never let an occupant's head rest near or on a side airbag because the inflating airbag could cause a serious or fatal injury. Please note that the word Airbag imprinted on the door trim panel indicates the airbag's location.
Accident research shows that the safest place for children in an automobile is in the rear seat. However, a child sitting in the rear seat and not properly restrained may place his or her head on or near the airbag, if so equipped. For example, a child – even though belted – may fall asleep with his or her head against the side airbag. It may be difficult for a driver to ensure that children in the rear seat will remain properly

positioned at all times and do not place their heads on or near the side airbag. Therefore, we recommend that the rear side airbags, if provided, be deactivated if you plan to transport children in the rear seat. The rear-seat side airbags may already have been deactivated by a BMW Sports Activity Vehicle center. Labels in the rear door opening should indicate the status of your rear seat side airbags. If you are uncertain of their status, or wish to have the airbags activated or deactivated, please contact your BMW Sports Activity Vehicle center.◀

Even if you adhere to all the instructions, injuries resulting from contact with airbags cannot be fully excluded, depending on the circumstances. The ignition and inflation noise may provoke a mild hearing loss in extremely sensitive individuals. This effect is usually only temporary.

Airbag warning information is also provided on both sun visors.

This is the right way a child should sit in a child-restraint device when rear side airbags, refer to arrow, are provided.

This is the right way a larger child should sit wearing the safety belt when rear side airbags, refer to arrow, are provided.

Online Edition for Part No. 01 41 0 157 897 - © 08/03 BMW AG

Indicator lamp

The indicator lamp in the instrument cluster shows the operational status of the airbag system from ignition key position 1 and up.

System operational:

▷ The indicator lamp comes on briefly then goes out.

System malfunction:

▷ The indicator lamp fails to come on
▷ The indicator lamp comes on briefly before going out and then lighting up again.

If there is a system malfunction, have your BMW Sports Activity Vehicle center inspect the system immediately. If you do not, there is a risk that the airbags will not be triggered within their normal response range, even if the level of impact would normally have triggered them.

Transporting children safely

The right place for children

Children always in the rear:

Accident research shows that the safest place for children in a vehicle is in the rear seat.

Older children should be tightly secured with a safety belt, after they have outgrown a booster seat that is appropriate for their age, height and weight.

⚠ A child sitting in the rear seat and not properly restrained may place his or her head on or near the airbag, if so equipped. For example, a child – even though belted – may fall asleep with his or her head against the side airbag. It may be difficult for a driver to ensure that children in the rear seat will remain properly positioned at all times and do not place their heads on or near the side airbag. Therefore, we recommend that the rear side airbags, if provided, be deactivated if you plan to transport children in the rear seat.◀

Child-restraint systems in the rear

Child-restraint systems appropriate for every age group and weight are available at your BMW Sports Activity Vehicle center.

⚠ Children under 13 years of age and children less than 5 ft/150 cm tall should always ride in the rear and the restraint systems should be secured with the vehicle's safety belts.◀

⚠ No universal rearward-facing child-restraint systems may be mounted on the rear seats. if you want to use a rearward-facing child-restraint system in the rear, then the BMW Baby Seat with or without the LATCH child-restraint fixing for child seat is suitable for this purpose.◀

Younger children should be secured in an appropriate forward-facing child-restraint system that has first been properly secured with a safety belt.

All rear seating positions in your vehicle meet the recommendations of SAE J1819, an industry-recommended practice for securing child-restraint systems in motor vehicles.

Online Edition for Part No. 01 41 0 157 897 - © 08/03 BMW AG

Exception for the front passenger seat

Should it become necessary to use a child-restraint system on the front passenger seat, the airbags on the passenger's side must be deactivated. Your BMW Sports Activity Vehicle center will be happy to advise you on this subject.◀

Never install a rearward-facing child-restraint system in the front passenger seat of this vehicle if the passenger airbag is not deactivated. If you do so, the child could be severely injured or killed when the airbag is triggered. Your vehicle is equipped with an airbag supplemental restraint system for the front passenger. Because the backrest on any rearward-facing child-restraint system – of the kind designed for infants under 1 year and 20 lbs./9 kg – would be within the airbag's deployment range, you should never mount such a system in the front passenger seat, since the impact of the airbag against the child restraint's backrest could lead to serious or fatal injuries.◀

Installing child-restraint systems

Before installing any child-restraint system or child seat, read the following:

Observe the child-restraint system manufacturer's instructions for installation and use. Otherwise the degree of protection can be reduced. After an accident, have all parts of the child-restraint system and of the relevant vehicle safety belt system checked by a BMW Sports Activity Vehicle center and replaced if necessary.◀

Commercially-available child-restraint systems are designed to be secured with a lap belt or with the lap belt portion of a combination lap/shoulder belt. Improperly or inadequately installed restraint systems can increase the risk of injury to children. Always read and follow the instructions that come with the system.

Child-restraint system security

All of the rear belt retractors and the front passenger's safety belt can be locked for mounting and securing child-restraint systems.

Information regarding this is located near the buckle latch of each safety belt.

Locking the safety belt

Pull the entire length of the belt from the belt retractor. Allow the reel to retract the belt somewhat and engage the buckle, then tighten the belt against the child-restraint system. The retraction mechanism is now locked.

Online Edition for Part No. 01 41 0 157 897 - © 08/03 BMW AG

Unlocking the safety belt

Unlock the safety belt, remove the child-restraint device and allow the belt retractor to reel the belt completely in.

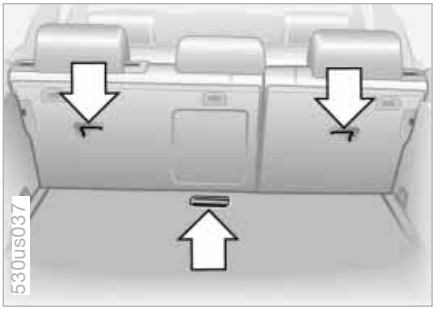

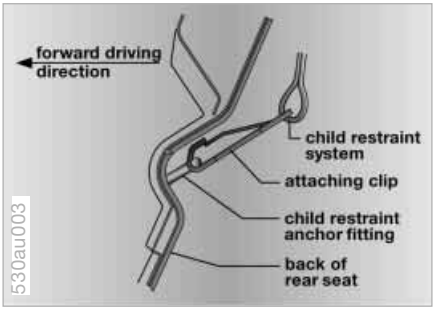

Child-restraint system with tether strap

If you use a child-restraint system with a tether strap, three additional tether anchorage points have been provided – refer to the arrows in the illustration. Depending on the location selected for seating in the rear passenger area, attach the tether strap to the corresponding anchorage point to secure the child-restraint system, as shown in the illustration below.

Each sitting position is fitted with a head restraint.

Outer seating positions:
Lift the head restraint and pass the tether strap between the head restraint and the seat back. It is recommended to readjust the head restraint into the lowest possible position.

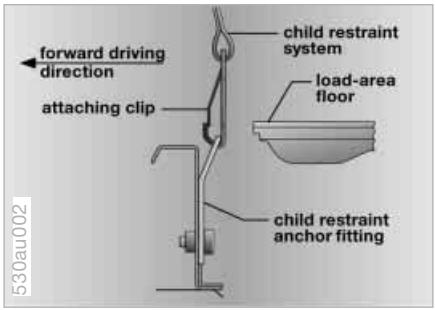

Center sitting position:
The head restraint must be adjusted into the lowest possible position. Pass the tether strap over the head restraint.

Adjust the tether strap according to the child-restraint manufacturer's instructions.

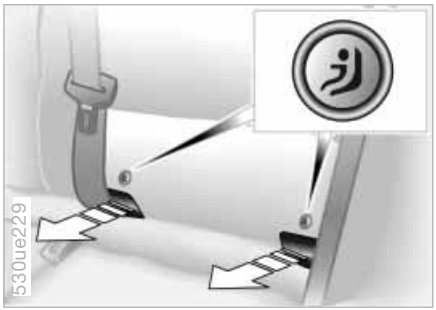

LATCH child-restraint fixing

Remove cover panel by pulling it off toward the front.
To remount, simply push on.

The illustration is an example showing the mounts for the LATCH, Lower Anchors and Tethers for CHildren, child-restraint mounting system at the left rear.
The system is also available at the right rear position.

Canadian models only:
The anchorage points for the LATCH are identified with buttons, refer to illustration.

⚠ To fit the LATCH child-restraint fixing, follow the manufacturer's operating and safety instructions.◀

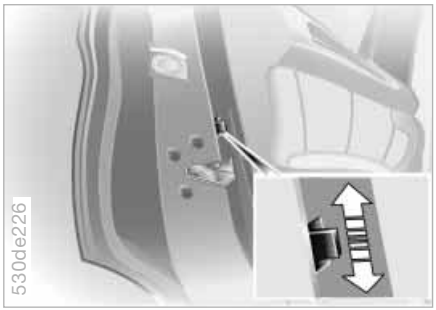

Child-safety locks

Slide the safety lever on the rear doors downward:

The door can now be opened from the outside only.

How the system functions

You have probably frequently wished that you could configure individual functions of your vehicle to reflect your own personal requirements. In engineering your vehicle, BMW has included several user-defined functions in the vehicle's design. Your BMW Sports Activity Vehicle center can make these settings for you.

There are settings related to the vehicle – Vehicle Memory – and settings related to individuals – Key Memory. You can configure up to four different basic positions for four different persons. The only requirement is that each person uses his or her own remote control key.

When your vehicle is unlocked with the remote control, the vehicle recognizes the individual user by means of a data exchange with the key, and makes adjustments accordingly.

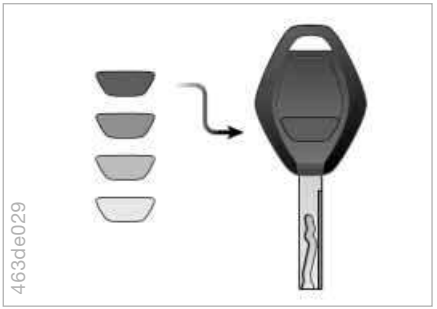

In order for you to distinguish between the central keys with remote control, colored decals are supplied together with the keys.

What the system can do

Your BMW Sports Activity Vehicle center can provide you with details on the capabilities of the Vehicle Memory and Key Memory systems.

You will see this symbol throughout the Owner's Manual. It is to remind you at appropriate places of the settings that are available to you.◀

Following configuration of the memory functions, vehicle operation may differ from the description in the Owner's Manual. Should you want to sell your BMW some day, please remember to have the memory functions reset to the default state.◀

Examples for Vehicle Memory:

- ▷ Various signals that can serve as acknowledgment for locking and unlocking the vehicle, refer to pages 29, 32
- ▷ Deactivating/activating the Pathway lighting function, refer to page 97.

Examples for Key Memory:

- ▷ Automatic adjustment of the driver's seat, exterior mirror and steering wheel with settings stored in the memory for the individual driver when the vehicle is unlocked, refer to page 50
- ▷ Calling up customized settings for the automatic climate control when unlocking the vehicle, refer to page 105.

Ignition lock

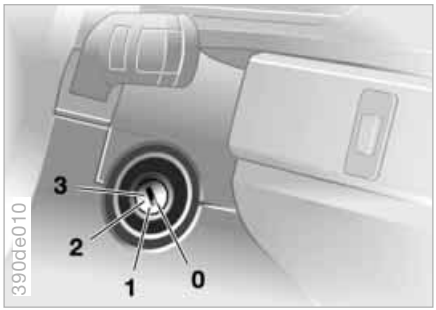

Ignition key positions

0 Steering lock engaged

1 Steering lock disengaged

2 Ignition on

3 Starting the engine

Steering lock engaged

The key can only be inserted or removed in this position.

After removing the key, turn the steering wheel slightly to the left or right until you hear the lock engage.

If the key is not removed, an acoustic signal sounds after the driver's door is opened.

▷ Vehicles with automatic transmission:
Do not move the selector lever from the Park position until the engine is running – ignition key in position 2.
In order to turn the key to position 0 or to remove it, first move the selector lever to the Park position – interlock.◀

Steering lock disengaged

A slight steering wheel movement often makes it easier to turn the key from 0 to 1.
Individual current consumers are ready for operation.

Starting the engine

▷ Vehicles with manual transmission:
Depress the clutch when starting the engine. If you do not, a lock prevents the engine from starting.◀

Starting the engine

Before starting

▷ Engage the handbrake
▷ Be sure that the gearshift lever is in Neutral or the selector lever in Park if the vehicle is equipped with an automatic transmission
▷ Depress the clutch pedal.

⚠ Do not run the engine in closed rooms, as otherwise the inhaling of toxic exhaust gases can cause unconsciousness and death. The exhaust gases contain carbon monoxide, an odorless and colorless, but highly toxic gas.
Never leave an unattended vehicle with the engine running, as such a vehicle represents a potential safety hazard.◀

⚠ When driving, standing at idle, and parking the vehicle, take care to avoid contact between the hot exhaust system and flammable materials, e.g. grass, hay, leaves, etc. Such contact could lead to a fire, resulting in serious personal injury and property damage.◀

Online Edition for Part No. 01 41 0 157 897 - © 08/03 BMW AG

Starting the engine

Do not press the accelerator pedal while starting the engine.

▷ X5 3.0i:
Do not actuate the starter for too short a time. Do not turn it for more than approx. 20 seconds. Release the ignition key immediately as soon as the engine starts.
X5 4.4i:
Your BMW is equipped with the convenience starting feature. Simply turn the ignition key to position 3 – starter – and then release it immediately.
The starter actuation continues to operate automatically for a certain period of time and is stopped automatically as soon as the engine has started.
The automatic starting mode will not operate or will be canceled if the battery voltage is low. The engine can be started by jump-starting, refer to page 165.◀

Do not allow the engine to warm up by leaving it running while the vehicle remains stationary. Instead, begin to drive immediately at a moderate engine speed.

Should the engine fail to start on the first attempt, if it is very hot or cold, for instance:

▷ Press the accelerator pedal halfway down while engaging the starter.

Cold starts at altitudes above 3,300 ft/ 1,000 meters and at very low temperatures, from approx. +5 °F/–15 °C:

▷ For the initial start attempt, allow the starter to remain engaged somewhat longer, approx. 10 seconds.

Engine idle speed is controlled by the engine computer system. Increased speeds at startup are normal and should decrease as the engine warms up. If engine speed does not decrease, service is required.

To prevent the battery from discharging, always switch off electrical devices that are not in use. Switch the ignition off when the vehicle is not being driven.

▷ Extended starting attempts, characterized by excessively frequent or long periods with the starter engaged, can lead to damage of the catalytic converter.◀

Switching off the engine

Turn the ignition key to position 1 or 0

⚠ Do not remove the ignition key when the vehicle is moving, as otherwise the steering could lock.
When leaving the vehicle, always remove the ignition key and lock the steering.
Vehicles with manual transmission:
Always engage the handbrake when parking on slopes and inclined surfaces. Even placing the gearshift lever in 1st gear or reverse may not provide adequate resistance to rolling.
Vehicles with automatic transmission:
Place the selector lever in Park.◀

Vehicles with automatic transmission:

The vehicle must be stationary and the selector lever in Park before you can remove the ignition key.

Online Edition for Part No. 01 41 0 157 897 - © 08/03 BMW AG

The handbrake is primarily intended to prevent the vehicle from rolling while parked; it brakes the rear wheels.

Engaging

The lever engages automatically when you pull it up and the indicator lamp comes on in the instrument cluster in ignition key position 2, refer to pages 18 and 19.

Releasing

Pull up slightly on the lever, press the button and lower the lever.

If exceptional circumstances should make it necessary to engage the handbrake while the vehicle is in motion, do not pull it too strongly. In doing so, continuously press the button of the handbrake lever.
Excessive pressure can lead to overbraking and loss of traction – fishtailing – at the rear axle.
The brake lamps do not light up when the handbrake is applied.
Vehicles with manual transmission: Always engage the handbrake when parking on slopes and inclined surfaces. Even placing the gearshift lever in 1st gear or reverse may not provide adequate resistance to rolling.
Vehicles with automatic transmission: Place the selector lever in Park.◀

To avoid corrosion, apply the handbrake lightly from time to time when coasting to a standstill at a traffic signal, for instance, provided that it is safe to do so.

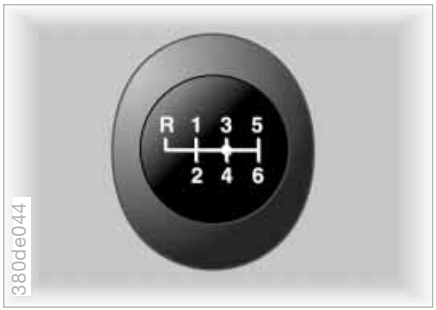

Press the clutch pedal all the way down each time you shift, pressing the gearshift lever into its proper end position.

Depress the clutch when starting the vehicle, too, otherwise, the interlock will prevent the engine from starting if the clutch is not depressed.

While shifting gear in the 5th/6th gear level, make sure that you press the gearshift lever to the right to prevent inadvertently selecting a gear in the 3rd/4th gear level. Do not hold the vehicle in place on slopes by slipping or riding the clutch. Use the handbrake instead, since a slipping clutch increases clutch wear.◀

Online Edition for Part No. 01 41 0 157 897 - © 08/03 BMW AG

Reverse

Select only when the vehicle is stationary. Press the gearshift lever to the left to overcome the resistance.

As you do this, the backup lamps will turn on automatically when the ignition key is in position 2.

Automatic transmission with Steptronic*

You can drive as with a normal automatic transmission. In addition, you can also shift manually.

If you move the selector lever from position D to the left into gearshift gate M/S, this activates the sports-style shift programs of the automatic transmission. As soon as you briefly press the selector lever in the **+** or **–** direction, Steptronic changes the gear. The manual mode is engaged. When you wish to use the automatic transmission mode again, move the selector lever to the right into the D position.

Under normal operating conditions, fuel consumption is lowest when driving in position D.

Selector lever positions

P R N D M/S

The transmission range display varies according to the equipment of your vehicle.

Starting the engine

The engine can only be started in selector lever positions Park or Neutral.

Online Edition for Part No. 01 41 0 157 897 - © 08/03 BMW AG

Range selection

An interlock prevents inadvertent gear-shifts into selector lever positions R and P. To cancel the interlock, press the button on the front of the selector lever knob, refer to arrow.

▷ While the vehicle is stationary and before shifting out of Park or Neutral, depress the footbrake in order to disengage the selector lever's lock mechanism – shiftlock.
Hold the footbrake down until starting off. The vehicle will otherwise creep when a drive position is engaged.◀

⚠ To prevent the vehicle from rolling, always select position P and engage the handbrake before leaving the vehicle with the engine running. Never leave an unattended vehicle with the engine running, as such a vehicle represents a potential safety hazard.◀

P Park

Select only when the vehicle is stationary. The transmission locks to prevent the rear wheels from turning.

R Reverse

Select only when the vehicle is stationary.

N Neutral

Select only if your journey is interrupted for a longer period.

D Drive – Automatic

This position is designed for driving under all normal operating conditions. All forward gears are available.

Kickdown

In the kickdown mode, you achieve maximum acceleration and in position D top speed.
Depress the accelerator pedal past the increased resistance point at the full-throttle position.

Online Edition for Part No. 01 41 0 157 897 - © 08/03 BMW AG

M/S manual operation and Sport Program

Shifting from D into M/S activates the Sport program and this is indicated with DS in the transmission range display. The Sport Program is designed for performance-oriented driving.

With the first brief press, the automatic transmission shifts from the Sport Program to the manual mode.
If you start to move the gear lever towards **+**, the transmission shifts upwards; moving it towards **–** shifts downwards. The following appears in the transmission range display depending on the model

▷ 1 to 5 or 1 to 6
▷ M1 to M5 or M1 to M6.

Upshifts and downshifts are executed only when they will result in a plausible combination of engine and vehicle speed; thus, for example, a downshift that would cause the engine to overrev will not be executed by the system. The gear selected will appear briefly in the instrument cluster followed by the current gear.

▷ To obtain maximum acceleration, for passing maneuvers, etc., during operation in the manual mode, use the kickdown or downshift manually.◀

You can only change from M/S to selector lever positions P, R and N via the D position.

Electronic transmission control module

If the indicator lamp comes on or the message – TRANS.FAIL-SAFE PROG – appears in the Check Control, there is a fault in the transmission system.

Bring the vehicle to a stop. Move the transmission selector lever to P. Engage the handbrake and switch off the engine, ignition key to position 0.

Wait a few seconds, then start the engine.
If the indicator lamp goes out after a few seconds, normal transmission performance has been restored. You may continue to drive as usual. If the indicator lamp does not go out, you can place the selector lever in all positions. However, the vehicle will now only drive forward with limited gear selection.

If this happens, avoid extreme engine loads and consult the nearest BMW Sports Activity Vehicle center.

⚠ Never work in the engine compartment with any of the forward or reverse gears engaged, as the vehicle could start to move.◀

Information on jump-starting, tow-starting and towing begins on page 165.

Indicator/Headlamp flasher

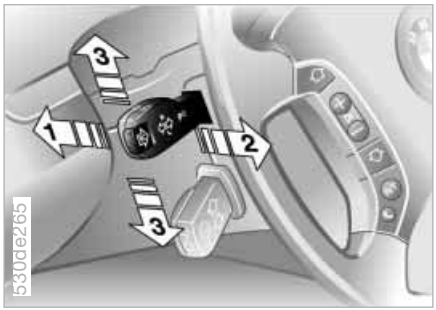

1 High beams – blue indicator
2 Headlamp flasher – blue indicator lamp
3 Turn signal indicators – green indicator accompanied by periodic clicking sound from the relay

Signaling briefly

Press the lever up to but not beyond the resistance point. It then returns to the center position when released.

▷ If the flashing indicator lamp and the ticking from the relay are both faster than normal, this indicates that one of the turn signal indicator bulbs is defective.◀

Washer/Wiper system/Rain sensor*

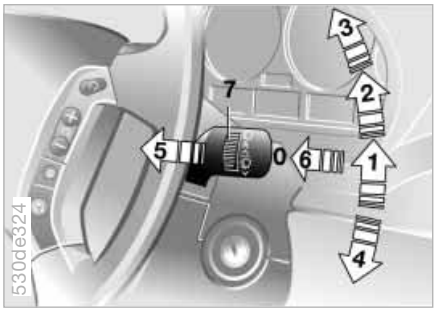

0 Wipers retracted
1 Intermittent mode or rain sensor
2 Normal wipe
3 Fast wipe
4 Brief wipe
5 Cleaning the windshield
6 Special wash program*
7 Serrated dial for control of the wipe interval or the sensitivity of the rain sensor

Retracted position

The left wiper is partially concealed by the hood. In order to bring the wipers to roughly a vertical position – this is important for changing the wiper blades or to fold the wipers out during frosty weather, for example:

▷ With the lever in position 1, switch off the ignition as soon as the wipers come to a stop.

If equipped with a rain sensor:

1. Switch on the wipers with the lever in position 1, 2 or 4
2. When the wipers are approx. vertical, switch the ignition off.

For changing the wiper blades, refer to page 152.

⚠ Fold the wipers back down onto the windshield before you turn the ignition key to position 1 or 2 again. If you do not, they could be damaged.◀

Intermittent mode

Not on vehicles with rain sensor.

You can set the wipe interval to four stages with serrated dial 7.
In addition, the wipe interval is varied automatically depending on road speed.

Rain sensor

The rain sensor is positioned on the windshield, directly in front of the interior rearview mirror.

To activate the rain sensor:
Move the lever to position 1 with the ignition key in position 1 or higher. The wipers travel once across the windshield, regardless of the weather conditions.

You can leave the lever permanently in position 1. It is then only necessary to activate the rain sensor from ignition key position 1 and up.
To do this, turn serrated dial 7 briefly.

To adjust the sensitivity of the rain sensor:
Turn serrated dial 7.

Deactivating the rain sensor:
Move lever to position 0.

⚠ Deactivate the rain sensor when passing through an automatic car wash. Failure to do so could result in damage caused by undesired wiper activation.◀

Normal wipe

The system switches automatically to intermittent mode when the vehicle is stationary, not on vehicles with rain sensor.

Fast wipe

The wipers operate at normal speed when the vehicle is not moving, not on vehicles with rain sensor.

Cleaning the windshield

The system sprays washer fluid against the windshield and activates the wipers for a brief period.

Special wash program*

As with 5; several additional wash cycles are carried out and the headlamps are cleaned*.
This program is recommended after you have driven on extremely dirty roads.

Cleaning headlamps*

▷ With the special wash program 6
▷ With every actuation of clean the windshield 5 when the vehicle's lighting is switched on, the headlamps will be cleaned at appropriate intervals.

Online Edition for Part No. 01 41 0 157 897 - © 08/03 BMW AG

Do not use the washers if there is any danger that the fluid will freeze on the windshield. If you do so, your vision could be obscured. For this reason, use an antifreeze agent, refer to page 143.
Do not use the washers when the reservoir is empty. This could cause damage to the washer pump.◀

Windshield washer nozzles

The windshield washer jets are warmed automatically when the ignition key is in position 2.

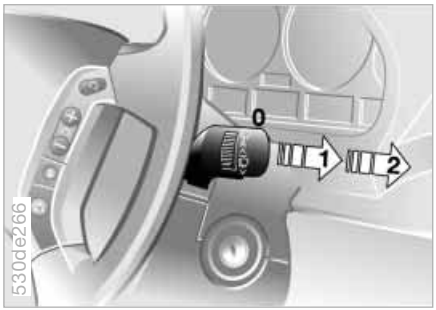

Rear window wiper

0 Retracted position of the rear window wiper

1 Rear window wiper in intermittent mode. When reverse gear is engaged, continuous operation is switched on automatically

2 Cleaning the rear window

You can also program the interval:

▷ Switch briefly from position 0 to position 1
▷ The time until reactivation – from position 0 to 1 – is the programmed interval, max. 30 seconds.

Programming is deleted:

▷ Approx. 10 seconds after the lever is placed in position 0 or
▷ after the engine is switched off.

For changing the wiper blade, refer to page 152.

Cruise control*

You can automatically maintain and store any desired vehicle speed above approx. 20 mph/30 km/h.

You can use cruise control whenever the system is active while the engine is running.

Activating the system

From ignition key position 2:
Press button; the indicator lamp in the instrument cluster comes on, refer to page 21. You are able to use the cruise control.

Do not use cruise control on twisting roads, when high traffic density prevents driving at a constant speed, when the road surface is slick – snow, rain, ice – or when the road surface is loose – rocks, gravel or sand.◀

Deactivating the system

Press the button repeatedly until the indicator lamp in the instrument cluster goes out.

The cruise control is also deactivated when the ignition key is turned into position 0.

The speed stored in the memory is deleted.

Maintaining and storing speed or accelerating

Briefly press button +:
The system maintains and stores the current vehicle speed. Every time you briefly press the button, the speed increases by approx. 0.6 mph/1 km/h.

Press and hold button +:
The vehicle accelerates without pressure on the accelerator pedal. When you release the button, the system maintains and stores the current speed.

If, on a downhill gradient, the engine's braking effect is not sufficient, the controlled speed can be exceeded. Speed can drop on uphill grades if the engine output is insufficient.◀

Online Edition for Part No. 01 41 0 157 897 - © 08/03 BMW AG

Decelerating

Briefly press button –:
When cruise control is active, every brief touch of the button reduces the speed by approx. 0.6 mph/1 km/h.

Press and hold button –:
With the cruise control active, the system automatically reduces the throttle opening to slow the vehicle. When you release the button, the system maintains and stores the current speed.

Interrupting the cruise control

When the system is activated, press the button. The indicator lamp stays on. You can use the cruise control again whenever required by calling up the speed that was stored last.

In addition, cruise control is interrupted automatically

- ▷ When you apply pressure to the brake pedal
- ▷ When you apply pressure to the clutch pedal or when you move the automatic transmission selector lever from Drive to Neutral
- ▷ If you exceed or fall below the controlled speed for an extended period, by depressing the accelerator, for example.

Recalling the stored setting

Press button:
The vehicle accelerates to and maintains the last speed stored.

Online Edition for Part No. 01 41 0 157 897 - © 08/03 BMW AG

Odometer, outside temperature display

1 Odometer

2 Trip odometer

3 Outside temperature display

Odometer

You can activate the displays shown in the illustration with the ignition key in position 0 by pressing the button in the instrument cluster, refer to arrow.

The range of available displays varies according to your individual vehicle's equipment.

Trip odometer

To reset the trip odometer to zero, press the button, refer to arrow, with the ignition key in position 1 or 2.

Outside temperature display

The outside temperature appears in the display from ignition key position 1 and higher.

You can change the units of measurement – °C/°F – by

1. pressing and holding down the button, refer to arrow, with the ignition key in position 1 and
2. then turning the ignition key to 0. At the same time the units of measurement in the temperature display of the automatic climate control will be changed, refer to page 103.

Refer also to page 79.

Ice warning

If the outside temperature drops to approx. +37.5 °F/+3 °C, a signal sounds as a warning and the display flashes for a brief period.

The ice warning does not alter the fact that surface ice can form at temperatures above +37.5 °F/+3 °C, on bridges or shaded road surfaces, for instance.◀

Tachometer

Do not operate the engine with the needle in the red overspeed zone of the gauge, refer to arrow.

In this range, the fuel supply is interrupted to protect the engine.

Energy control

Shows the current fuel consumption. This allows you to see whether your current driving style is conducive to fuel economy with minimum exhaust emissions.

Fuel gauge

If the indicator lamp comes on and stays on, there are approx.
▷ 2.0 gal./8 liters – 6-cylinder engine
▷ 2.5 gal./10 liters – 8-cylinder engine
of fuel still in the tank.

Tank capacity: approx. 24.6 gal./ approx. 93 liters.

Certain operating conditions where the tilt of the vehicle varies, such as those encountered in mountainous areas, may cause the needle to fluctuate slightly.

⚠ Refuel well before the tank is empty, as otherwise engine functions will not be ensured and damage can occur if you drive down to the last drop.◀

When you switch on the ignition, the indicator lamp comes on briefly to confirm that the system is operational.

Temperature gauge

Blue

The engine is still cold. Drive at moderate engine and vehicle speeds.

Red

When you switch on the ignition, the warning lamp* comes on briefly to confirm that the system is operational.

If the warning lamp lights up during driving or the message – COOLANT TEMPERATURE – appears in the Check Control: the engine is overheated. Switch off the engine immediately and allow it to cool down.

Checking coolant level, refer to page 145.

Online Edition for Part No. 01 41 0 157 897 - © 08/03 BMW AG

Temperature gauge

Between the blue and red zones

Normal operating range. The dial may wander into the red field.

Service Interval Display

The range of available displays varies according to your individual vehicle's equipment.

Green lamps

The number of illuminated lamps decreases as the time for your next maintenance visit approaches.

Yellow lamp

This field appears together with OILSERVICE or INSPECTION.

Maintenance is due. Please contact your BMW Sports Activity Vehicle center for an appointment.

Red lamp

The maintenance deadline has been passed.

Online Edition for Part No. 01 41 0 157 897 - © 08/03 BMW AG

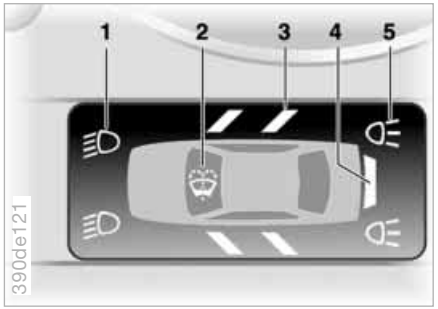

Graphic display*

The following alerts or status messages are displayed with icons from ignition key position 2 and up until the defects are corrected:

1 Check low beams

2 Add washer fluid, goes out after approx. 1 minute

3 Door open

4 Tailgate open

5 Check brake and tail lamps. A defective center brake lamp is indicated by the upper symbol.

When you open the door after stopping, a warning signal sounds without a visual indicator for:

▷ LIGHTS ON
▷ KEY IN IGNITION LOCK.

Alphanumeric display*

Text messages are used to alert the driver to system malfunctions when the ignition key is turned to position 2. The alert is accompanied by an acoustic signal.

1 Status messages symbol

2 Display

3 CHECK button

Messages concerning system faults are differentiated based on two priorities:

Priority 1

These defects are immediately indicated by an acoustic signal and a flashing warning symbol 1. Simultaneous defects will be displayed consecutively. These status messages remain in the display until the defects are corrected. They cannot be deleted by pressing the CHECK button 3:

▷ RELEASE PARKING BRAKE
▷ COOLANT TEMPERATURE
Temperature too high. Stop the vehicle immediately and switch off the engine, refer to pages 74 and 145
▷ STOP! ENGINE OILPRESS
Oil pressure too low. Stop the vehicle immediately and switch off the engine, refer to pages 18 and 143

Online Edition for Part No. 01 41 0 157 897 - © 08/03 BMW AG

▷ CHECK BRAKE FLUID
Level has dropped approx. to minimum. Have topped up at the next opportunity, refer to page 146. Have the cause of the brake fluid loss rectified by your BMW Sports Activity Vehicle center

▷ DSC/4x4 INACTIVE
DSC and/or all-wheel drive system xDrive has failed.
The stabilizing interventions of DSC and/or the all-wheel drive system xDrive are no longer available. Drive may then only be carried out via the rear axle.
Have the system checked at the nearest BMW Sports Activity Vehicle center.
For additional information, refer to page 92

▷ SELFLEVEL SUSP.INACT*
Please consult the nearest BMW Sports Activity Vehicle center

▷ SELFLEVEL SUSP.INACT*
MAX. 35 MPH/MAX. 60 KM/H*
These messages are displayed consecutively.
Do not exceed a maximum speed of 35 mph/60 km/h.
Please consult the nearest BMW Sports Activity Vehicle center

▷ TRANSMISS'N OVERHEAT*
Reduce speed immediately and stop at a suitable location so that the system can cool down again. Please contact the nearest BMW Sports Activity Vehicle center

▷ LIMIT*
Display when the programmed road-speed limit is exceeded, refer to page 84.

Priority 2

These displays appear for 20 seconds when the ignition key is turned to position 2. The warning symbols remain after the message disappears. You can open the messages again for display by pressing the CHECK button.

▷ TRUNKLID OPEN
This message only appears when starting off

▷ DOOR OPEN
This message appears after a minimal defined road speed has been exceeded

▷ FASTEN SEAT BELTS*
In addition, the indicator lamp with the belt symbol lights up and an acoustic signal sounds

▷ WASHER FLUID LOW
Too low, top up at the next opportunity, refer to page 143

▷ CHECK ENGINE OIL LEV
The level is at the absolute minimum, therefore top up engine oil as soon as possible, refer to page 143. Do not drive more than approx. 30 miles/ 50 km until you do

▷ CHECK GAS CAP
Check to see whether the fuel filler cap has been closed properly, refer to page 24

▷ OUTSIDE TEMP. +23 °F/–5 °C
This display is only an example. The current temperature is displayed at outside temperatures of +37.5 °F/ +3 °C and below, refer also to page 72

▷ CHECK BRAKE LIGHTS
A lamp has failed or the electrical circuit has a fault, refer to page 155 or consult a BMW Sports Activity Vehicle center

▷ CHECK LOWBEAM LIGHTS
CHECK SIDE LIGHTS
CHECK REAR LIGHTS
CHECK FRONT FOGLAMPS
CHECK LICPLATE LIGHT
CHECK HIGHBEAM LIGHT
CHECK BACK UP LIGHTS
The respective lamp may have failed or the electrical circuit may be defective, refer to page 153 or consult a BMW Sports Activity Vehicle center

Online Edition for Part No. 01 41 0 157 897 - © 08/03 BMW AG

▷ TRANS. FAILSAFE PROG*
Please consult the nearest BMW Sports Activity Vehicle center, refer to page 66

▷ CHECK BRAKE LININGS
Have the brake pads inspected by your BMW Sports Activity Vehicle center, refer to page 133

▷ CHECK COOLANT LEVEL
Coolant too low, top off at the next opportunity, refer to page 145

▷ ENGINE FAILSAFE PROG
Fault in the engine electronics.
You can continue to drive with reduced engine output or engine speed.
Please have the system inspected by your BMW Sports Activity Vehicle center.

Displays after completion of trip

All of the malfunctions registered during the trip appear consecutively when the ignition key is turned to position 0.

The following displays will appear when appropriate:

▷ LIGHTS ON

▷ KEY IN IGNITION LOCK

▷ CHECK ENGINE OIL LEV
Top up engine oil at the next opportunity, e.g. while refueling, refer to page 143.

This display appears when you open the driver's door after parking the vehicle. A supplementary acoustic signal is also heard.

Status messages remain available with the CHECK button 3 for a period of approx. three minutes after the display goes out and the key is removed from the ignition lock. If there were multiple messages, press the CHECK button repeatedly to view them all in sequence.

Checking the Check Control

Press the CHECK button 3 with the ignition key in position 2:
CHECK CONTROL OK appears in the display.

No malfunctions are present in the monitored systems.

Computer

You can find a description of the computer on pages 79 and 84 as well as in the Owner's Manual for the Onboard Computer.

You can have the Check Control and computer messages displayed in a different language.◀

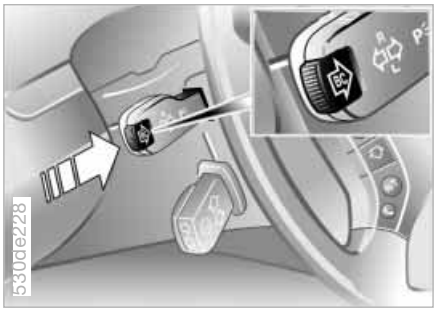

Mode selection

From ignition key position 1 onwards you can open information from the computer using the button in the turn signal lever. By pressing the button briefly in the direction of the steering column, you can open a new function for display.

The displays appear in the following order: outside temperature, average fuel consumption, cruising range, average speed.

Starting with ignition key position 1, the last active setting is displayed.

The range of available displays varies according to your individual vehicle's equipment.

Outside temperature and average fuel consumption

You can change the units of measurement – °F / °C – for the outside temperature display by

1. pressing and holding the trip odometer reset button with the ignition key in position 1 and
2. then turning the ignition key to 0. At the same time the units of measurement in the temperature display of the automatic climate control will be changed, refer to page 103.

Refer also to page 72.

Cruising range and average speed

The computer bases its calculations of the cruising range on the previous driving style and conditions.

The computer ignores any time spent with the vehicle stationary and the engine switched off in its average speed calculations.

Canceling the display

If the button in the turn signal lever is pressed briefly while the average speed is displayed, the computer display can be masked out.

Restarting calculations

If you continue to press the button in the turn signal lever, the average values which were just displayed for fuel consumption and speed will be recalculated from that point. The engine must be running for this calculation.

Computer with alphanumeric display*

If your vehicle has Check Control with alphanumeric display, the system's computer is described beginning on page 84 and in the Owner's Manual for the Onboard Computer.

Central display

The MID serves as the central display and operation for the following onboard systems:

▷ Digital clock, e.g. time display, date
▷ Audio systems – radio, cassette, CD
▷ Computer, e.g. fuel consumption, cruising range
▷ Portable phone, e.g. dialing.

You will find explanations and notes for operating the digital clock and the computer on the following pages. Please refer to the separate Owner's Manuals for operating the audio systems, the portable phone and the computer.

▷ Any unrealistic numerical entries will not be accepted.
All stored data will be lost if the power supply is interrupted. Time display, switch-on times for independent ventilation, distance and cruise control speed limit may have to be reset once the power supply has been reestablished.◀

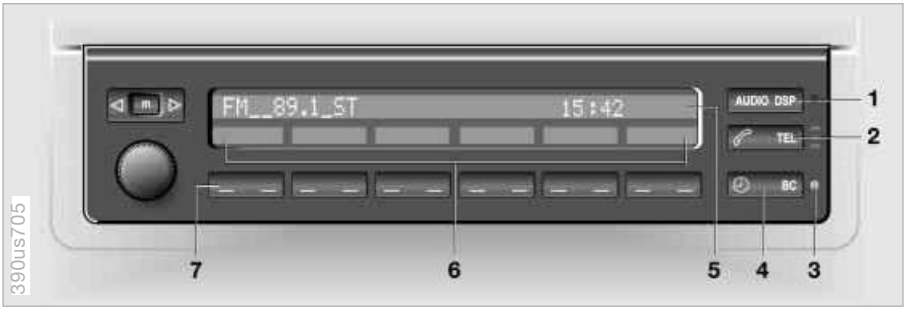

1 Function button for audio systems
2 Function button for the portable phone
3 Indicator lamp for independent ventilation
   ▷ remains on if switch-on time is active
   ▷ flashes while operating
4 Function button for the digital clock and computer
5 Indicator display for the various onboard systems
6 Display for the entry and call-up buttons. Depending on the operating mode, the functions and alternatives that can be selected at the buttons are displayed here
7 Entry and call-up buttons for operating the various onboard systems

Online Edition for Part No. 01 41 0 157 897 - © 08/03 BMW AG

Digital clock in the MID

Only make entries when the vehicle is stationary – to avoid endangering yourself or other road users.◀

Calling up time or date

Press the left side of the button.

Display shows:

You can have the time displayed in 12 or 24 hours.

To change the display:

Press the left side of the button.

If the 12-hour time display is in use, AM or PM appears after the time.

Changing time

Press the left side of the button.

Press the right side of the button:
The dots flash in the display.

To change the setting:

Press on the left/right, or hold the button down.

To store the entry:

Press the right side of the button.

Changing date

Press the left side of the button.

Press.

Press the right side of the button:
The dots and the DATE display flash.

To change the setting:

Press on the left/right, or hold the button down.

To store the entry:

Press the right side of the button.

The clock takes leap years into account and therefore does not have to be reset manually.

Online Edition for Part No. 01 41 0 157 897 - © 08/03 BMW AG

Reminder signal

You can program a reminder signal – Memo – to be heard every hour, so that you are sure not to miss a news broadcast.

Press the left side of the button.

Press:
MEMO OFF appears in the display for entry and call-up buttons, and the tone symbol will appear in the upper right of the display.

A signal is then heard 15 seconds before each hour.

Stopwatch

Press the left side of the button.

Press.

Display shows:

To start the stopwatch function:

Press the right side of the button.

To take an intermediate time reading:

Press.

Press:
The stopwatch display can be seen counting up; the stopwatch continues to run.

To halt the stopwatch:

Press the right side of the button.

▷ The stopwatch is halted when the ignition key is turned back to 0, but starts to run again when the ignition key is turned to 1.◀

Online Edition for Part No. 01 41 0 157 897 - © 08/03 BMW AG

Entering the switch-on times for the independent ventilation

You can enter two different switch-on times.
The ventilation will switch off automatically after 30 minutes.

Please follow the instructions for operating the independent ventilation that start on page 109.◀

Press the left side of the button.

Press on the left/right.

Display shows:

Press the right side of the button:
Display flashes, e.g. TIMER 1.

To enter the time:

Press on the left/right, or hold the button down.

To confirm the entry:

Press the right side of the button.

The activated time is marked with an asterisk.

The switch-on times remain stored until new entries are made.

You can change switch-on times that have already been stored by making a new time entry as described above.

When the switch-on time is active, the LED comes on in the MID. During actual operation of the ventilation, the LED flashes. The LED goes out when the system is switched off.

To activate/deactivate the time:

Press twice.

Directly switching the independent ventilation on and off

The independent ventilation function can only be called up in ignition key position 1.◀

Press the left side of the button.

Press.

Only make entries when the vehicle is stationary – to avoid endangering yourself or other road users.◀

Computer calculations begin at the start of the journey.
Information can also be called up in the display by remote control, refer to page 88.

Speed limit

Speed limit entry:

You can enter the road speed here at which you wish to hear and see a reminder signal: a signal will sound, the word LIMIT will flash, and with the Check Control with alphanumeric display*, the speed limit warning stored in the memory will appear on the instrument cluster briefly.

The speed limit reminder is only repeated if road speed has fallen at least 3 mph/5 km/h below the preset speed limit.

Press the right side of the button.

Press.

Press the right side of the button.

Display shows:

Enter the limit by pressing the function buttons.

To correct an entry:

Press the left side of the button and repeat the entry.

To store the entry:

Press the right side of the button.

Online Edition for Part No. 01 41 0 157 897 - © 08/03 BMW AG

Adopting the current speed as the speed limit:

Press the right side of the button.

Press.

Press twice at right.

Deactivating the speed limit:

Press the right side of the button.

Press.

The LIMIT display goes out, but the stored value is not lost and can be reactivated by pressing the LIMIT button.

Distance to destination

The remaining distance to the destination will be displayed on the screen. Enter the entire distance before starting the journey.

To enter:

Press the right side of the button.

Press the left side of the button.

Press the right side of the button.

Display shows:

You can enter the distance by pressing the function buttons.

To correct an entry:

Press the left side of the button and repeat the entry.

To store the entry:

Press the right side of the button.

Checking stored value:

Press the right side of the button.

Press the left side of the button.

Online Edition for Part No. 01 41 0 157 897 - © 08/03 BMW AG

Estimated time of arrival

When you have entered the distance to your destination, you can obtain an estimated time of arrival display which is continuously updated by the computer as your average driving period varies.

Press the right side of the button.

Press the right side of the button:
The estimated time of arrival is displayed.

Cruising range

The distance which the vehicle should cover on the remaining fuel in the tank is displayed.

Press the right side of the button.

Press:
The display shows the probable range.

⚠ Always refuel as soon as possible once your cruising range falls to below 30 miles/50 kilometers, as otherwise engine functions are not ensured and damage can occur.◀

The computer will only register fuel amounts over 1.8 gal/6 liters.

Fuel consumption

You can have the average fuel consumption displayed for two different distances, for example a complete journey and part of the journey.

To start the calculation, select the function with the engine running:

Press the right side of the button.

Press the left or right side of the button:
The display will show the average fuel consumption.

To restart the fuel consumption calculation:

Press the left or right side of the button.

Press the right side of the button.

Online Edition for Part No. 01 41 0 157 897 - © 08/03 BMW AG

Speed

You can open a display of the vehicle's average speed.

To start the calculation, select the function with the engine running:

Press the right side of the button.

Press:
The display shows the average speed.

To recalculate the speed:

Press the right side of the button.

Extended immobilizer function

You can establish a code that will prevent the engine from being started unless the code is entered.

If you do not have access to the code, the emergency deactivation procedure will have to be carried out, refer to next page.

Establishing and activating the code:

Press the right side of the button.

Press the left side of the button.

Display shows:

Enter the code with the function buttons.

To correct an entry:

Press on the left side of the button and repeat the entry.

To store the entry:

Press the right side of the button.
Turn the ignition key to position 0.

Deactivate the code:

When you are asked to enter the code – ignition key in position 1 or 2:

▷ Enter the code at the function buttons.

Press the right side of the button.

After the code has been entered correctly and confirmed with the SET button, the time display appears.

Online Edition for Part No. 01 41 0 157 897 - © 08/03 BMW AG

After three incorrect code entries, or three attempts to start the engine without a code entry, the alarm will sound for 30 seconds on vehicles fitted with an alarm system.

Deactivating the alarm in an emergency:

If you have forgotten the code, proceed as follows:

1. Disconnect the battery, wait approx. 2 minutes, then reconnect it. Note that on vehicles with an alarm system, the alarm will sound
2. Set the ignition key to position 1: the time display will count down for the next ten minutes
3. After ten minutes, start the engine.

▷ If the code becomes available again in the meantime, it can be entered during the waiting period after pressing the CODE button.◀

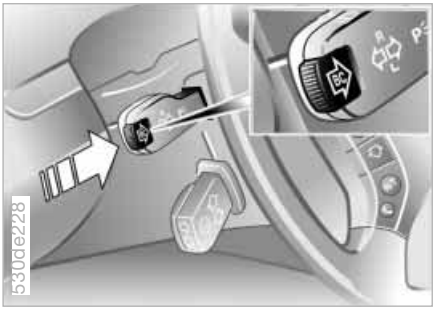

Remote control

The button on the turn signal lever can be used to select the items of computer information which are to be displayed.

To do this, press:

▷ the button on the lever until PROG shows on the display
▷ the MID buttons in the order in which you wish the information to be displayed.
Each time an entry is stored, the program number appears on the display.

To terminate the selection procedure:

Press the right side of the button.

To have all the available information displayed, press
▷ the button on the lever until PROG shows on the display
▷ the SET button.

To obtain individual items of information, briefly press the button as often as necessary.

The concept

PDC provides extra safety and convenience during parking maneuvers. Signal tones indicate the current distance to an object behind or in front of your vehicle. To do this, four ultrasonic sensors in the front and rear bumpers each measure the distance to the nearest object. The detection range of the front sensors and the two sensors located at the ends of the rear bumper is approx. 2 ft/60 cm, while the rear center sensors can detect objects to a distance of approx. 5 ft/1.50 m.

PDC is a parking aid that can indicate objects when they are approached slowly, as is usually the case when parking. Avoid approaching objects too fast, otherwise the system may give warning of physical obstacles too late.◀

Automatic function

The system starts to operate automatically approx. one second after you select reverse or move the selector lever into the R position with the ignition key in position 2.

Wait this short period before reversing.

Manual activation

Press the button, the indicator lamp lights up.

Manual deactivation

Press the button again; the indicator lamp goes out.

Automatic deactivation

After driving a distance of more than approx. 160 ft/50 m or exceeding a speed of approx. 20 mph/30 km/h, the system switches off and the indicator lamp goes out. Switch the system on again as required.

Online Edition for Part No. 01 41 0 157 897 - © 08/03 BMW AG

Acoustic signals

The distance from an object is indicated in front with a higher intermittent tone, and at the rear with a lower intermittent tone. As the distance between vehicle and object decreases, the intervals between the tones become shorter. The signal tone becomes continuous once the distance to the nearest object falls to below roughly 1 ft/30 cm.

The warning signal is canceled after approx. 3 seconds if you are moving parallel to a wall.

If there is a malfunction of the system: The indicator lamp flashes and a short steady signal tone is sounded

▷ if you activate PDC with the button
▷ when you select reverse for the first time after switching on the ignition
▷ if a malfunction occurs while the PDC system is active.

Switch the system off and have the cause of the malfunction corrected by your BMW Sports Activity Vehicle center.

⚠ Even with PDC, final responsibility for estimating the distance between the vehicle and any obstructions always remains with the driver. Even when sensors are involved, there is a blind spot in which objects cannot be detected. This applies especially in those cases where the system approaches the physical constraints of ultrasonic measurement, as occurs with tow bars and trailer couplings, and in the vicinity of thin or wedge-shaped objects. Low objects already displayed, e.g. a curb, can also disappear from the detection area of the sensors again before a continuous tone sounds. Loud sources of sound, inside and outside the vehicle, could drown out the PDC signal tone.◀

Keep the sensors clean and free of ice or snow in order to ensure that they will continue to operate effectively.
Do not apply high pressure spray to the sensors for a prolonged period of time. Keep the spray at least 4 in/10 cm away from the sensors.

Antilock Brake System

The concept

The ABS Antilock Brake System keeps the wheels from locking during braking, thereby enhancing active driving safety. The vehicle continues to be steerable during hard braking.
ABS also includes EBV Electronic brake-force distribution.
Safe braking, refer to page 132.

EBV Electronic brake-force distribution

EBV controls the brake system's application pressure at the rear wheels to ensure stable deceleration.

DBC Dynamic Brake Control

The Dynamic Brake Control actively supports the driver in dangerous braking situations. Quickly pumping the brake pedal will increase the braking effect with low pedal pressure so that the shortest possible braking distance is achieved. This system exploits all of the benefits provided by ABS.

Do not reduce the pressure on the brake pedal for the duration of the brake application. DBC is deactivated when you release the brake pedal.

Online Edition for Part No. 01 41 0 157 897 - © 08/03 BMW AG

Malfunction

Please be sure to observe the information on the ABS warning lamp on page 20 and on the possible lamp combinations that can light up on page 19.

The concept

DSC maintains vehicle stability, even in critical driving situations.

The DSC is operational every time you start the engine.

The system optimizes the driving stability during acceleration and when starting from a standstill. The system recognizes any tendency for the vehicle to assume an unstable attitude such as oversteer or understeer; it then counteracts this tendency with a combination of graduated reductions in engine torque and selective braking intervention at individual wheels. DSC provides optimized stability within the limits defined by the laws of physics.

The laws of physics cannot be repealed, even with DSC.
An appropriate driving style always remains the responsibility of the driver. We therefore urge you to avoid using the additional safety margin of the system as an excuse for taking risks.
Do not make any modifications to the DSC system. Never allow anyone other than authorized professional technicians to carry out service or repairs on the system.◀

Indicator lamps

The indicator lamps in the instrument cluster go out shortly after you switch on the ignition.

The indicator lamp flashes:
DSC is active and governs drive and braking force.

The indicator lamp stays lit:
DSC has been switched off using the button and the stabilizing interventions are no longer available.

Online Edition for Part No. 01 41 0 157 897 - © 08/03 BMW AG

DSC Dynamic Stability Control

Switching off DSC

Press the button; the indicator lamp comes on and stays on.

Stabilizing interventions of the chassis control system DSC are no longer available. However, the braking interventions that simulate the function of the differential lock continue to be active.

In the following exceptional circumstances, it may be effective to switch off the DSC for a short period:

- ▷ When rocking the vehicle and starting off in deep snow or on loose road surfaces
- ▷ On sandy road surfaces
- ▷ On poor surfaces with deep ruts
- ▷ If the wheels churn on muddy surfaces
- ▷ When driving with snow chains.

▷ As a result of the braking interventions, the brakes may be subjected to additional loads when the system is switched off. In order to limit the brake temperature, brief automatic masking of the brake activation is possible.
To maintain vehicle stability, always drive with the system switched on when possible.◀

Switching DSC on

Press the DSC button again; the indicator lamp goes out. DSC is now activated.

Malfunction

Please be sure to observe the information on the Dynamic Stability Control ASC/xDrive warning lamp on page 21 and on the possible lamp combinations that can light up on page 19.

xDrive

xDrive is the 4-wheel drive system of your X5. The combined effects of xDrive and DSC further optimize the traction and dynamic driving characteristics. The 4-wheel drive system xDrive variably distributes the drive torque to the front and rear axle depending on the driving situation and prevailing road conditions.

Malfunction

Please be sure to observe the information on the Dynamic Stability Control ASC/xDrive warning lamp on page 21 and on the possible lamp combinations that can light up on page 19.

Online Edition for Part No. 01 41 0 157 897 - © 08/03 BMW AG

HDC Hill Descent Control

The concept

HDC is a system for driving downhill in steep terrain. This system reduces vehicle speed on steep downhill gradients, thus allowing you to maintain control of your BMW under these conditions.
The vehicle moves at slightly more than walking speed without active intervention from the driver.

HDC is available for activation at vehicle speeds below approx. 20 mph/ 35 km/h. When driving down steep hills with a speed below approx. 20 mph/ 35 km/h, the vehicle reduces speed automatically down to slightly more than walking speed, approx. 5 mph/ 8 km/h, and then maintains this speed.

You can use the accelerator or brakes to vary this automatically controlled speed within a range extending from approx. 3 mph/5 km/h to 15 mph/ 25 km/h.
You can specify a target speed within the same range by using the +/– buttons of the cruise control.

HDC is automatically deactivated once vehicle speed again exceeds approx. 35 mph/60 km/h.

Activating the system

Press the button, the indicator lamp lights up.

The indicator lamp flashes when the brakes are applied automatically.

Deactivating the system

Press the button again; the indicator lamp goes out.

HDC is deactivated automatically above a road speed of approx. 35 mph/ 60 km/h and when the ignition is switched off.

Using HDC

With manual transmission:
Use HDC in first gear and in Reverse since the engine's braking effect is diminished in the higher gears.

With automatic transmission:
You can use HDC in every drive position.

In case of a malfunction

The indicator lamp in the button goes out in the HDC mode or does not come on when HDC is switched on:
HDC is temporarily not available if brake temperature is too high.

If the indicator lamp also lights up:
A fault as occurred in the HDC system.
Have your BMW Sports Activity Vehicle center inspect this system as soon as possible.

Online Edition for Part No. 01 41 0 157 897 - © 08/03 BMW AG

Self-leveling suspension*

The warning lamp for the self-leveling suspension comes on, or the message – SELFLEVEL SUSP.INACT – appears in the Check Control: there is a malfunction in the self-leveling suspension.

Stop and inspect the vehicle. If it is riding significantly lower in the rear than in the front, or if it is sitting at an incline – left rear compared to right rear – consult the nearest BMW Sports Activity Vehicle center. Drive with appropriate caution in the meantime. The vehicle has reduced ground clearance and driving comfort may be noticeably reduced.

Even if the attitude of the vehicle is normal, you should consult the nearest BMW Sports Activity Vehicle center if the warning lamp indicates a system malfunction.

2-axle self-leveling suspension*

The concept

Your vehicle is equipped with 2-axle self-leveling suspension acting on both the front and rear suspension. This system combines automatic self-leveling, which compensates for variations in front-to-rear load-distribution patterns, with a selection feature allowing drivers to choose from among several ride-height options.

You may choose from among the following ride heights:

- ▷ Normal
  The standard setting is intended for most operating conditions, including trailer towing
- ▷ Off-Road
  Increased level for more ground clearance
- ▷ Access
  Lowers vehicle for more convenient cargo handling or easier passenger entries and exits.

Changes in ride height are initiated either manually, using the control button, refer to page 95, or automatically in response to specific speeds. When the ride height is selected manually, the driver has the additional option of revising the ride-height selection by entering a new command during the adjustment process.

When the vehicle is stationary, the system executes ride-height changes in both directions – up and down – whenever the doors are closed. The tailgate/liftgate may be open. The system raises the vehicle only when the engine is running.

The system's automatic self-leveling feature automatically compensates for variations in the vehicle's load.

▷ Frequent changes in ride height initiated at short intervals can overheat the compressor, causing the system to briefly suspend active operation.◀

Online Edition for Part No. 01 41 0 157 897 - © 08/03 BMW AG

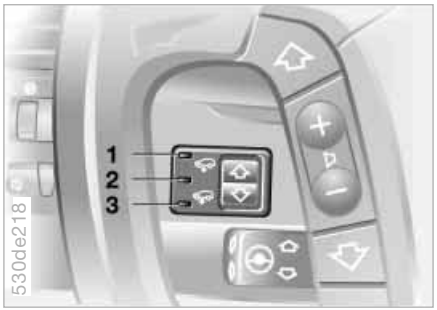

Self-leveling suspension display

1 Off-Road

2 Standard

3 Access

The LEDs not only show the current ride height, but also indicate changes:

▷ LED on: indicates the vehicle's current ride height

▷ Ride-height LED flashes while the LED for the earlier level remains on: the ride height is being adjusted to a new level, either automatically or in response to driver input at the button.

When the suspension reaches the new ride height the flashing LED reverts to continuous operation, and the LED for the earlier level goes out

▷ LED for current ride height flashes for roughly 3 seconds when you press the button: change in ride height is not possible.

Raising

Available only when the engine is running.

From Standard to Off-Road:

Press button 1 while traveling at a speed of less than approx. 30 mph/ 50 km/h.

From Access to Standard:

▷ Press button 1 or

▷ the setting automatically reverts to the standard setting once the vehicle exceeds a speed of roughly 20 mph/ 35 km/h.

Online Edition for Part No. 01 41 0 157 897 - © 08/03 BMW AG

Lowering

Available with ignition key in position 2.

From Standard to Access:

1. Press button 2 while traveling at less than approx. 50 mph/80 km/h. The system enters its preselection mode. The preselection mode is canceled
   - ▷ by pressing button 1
   - ▷ automatically once the vehicle exceeds a speed of approx. 50 mph/80 km/h or roughly 60 seconds after button 2 is pressed
2. Reduce speed to below approx. 15 mph/25 km/h within roughly 60 seconds after pressing button 2.

▷ When you press button 2 at speeds below approx. 15 mph/25 km/h the system automatically lowers the vehicle to the Access level.◀

From Off-Road to Standard:

- ▷ Press button 2 or
- ▷ automatically once you exceed a speed of approx. 30 mph/50 km/h.

Brake force display

The Brake force display indicates the intensity with which you are applying your brakes to drivers of following vehicles.

The display consists of two stages:

- ▷ Normal braking:
  The brake lamp units within the tail lamps and the high-mount brake lamp integrated within the rear spoiler both light up with normal intensity
- ▷ Hard braking or braking with ABS active:
  The tail lamps also light up with the same intensity as the standard brake lamp units to enhance the warning effect of the brake lamps.

Online Edition for Part No. 01 41 0 157 897 - © 08/03 BMW AG

Parking lamps – side marker lamps

The front, rear and side vehicle lighting is switched on. You can use the parking lamps for parking. For lighting on one side for parking as an additional feature, refer to page 98.

Low beams

When the ignition is switched off and the low beams are on, only the parking lamps – side marker lamps – remain on.

Pathway lighting:
When you activate the headlamp flasher after parking the vehicle and switching off the lamps, the low beams will come on for a brief period. You may also have this function deactivated if you wish.◀

Lights on warning

Whenever you open the driver's door, after having turned the ignition key to position 0, you will hear an acoustic signal for a few seconds to remind you that the lamps have not been switched off.

On vehicles with alphanumeric Check Control*:
The reminder is given through the Check Control.

Daytime driving lamps*

The headlamps are automatically switched on for daylight driving at ignition key position 2.

Automatic headlamp control*

When you set the switch to this position, the system activates and switches on and off the low beams in response to changes in ambient light conditions, for instance, in tunnels, at dawn and dusk, and in rain and snow.

Following automatic activation the vehicle's external lighting remains on when you switch on the fog lamps.◀

Automatic headlamp control cannot serve as a substitute for the driver's judgment in determining when the vehicle lamps should be switched on. For example, the system cannot detect fog. To avoid safety risks, you should always switch on the lamps manually under these conditions.◀

You can have the sensitivity of the headlamp control system adjusted on your vehicle.◀

Instrument lighting

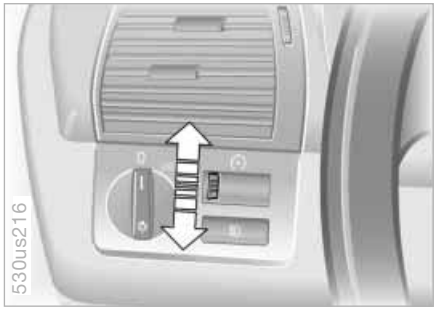

Turn the serrated dial to adjust the illumination intensity.

High beams/Standing lamps

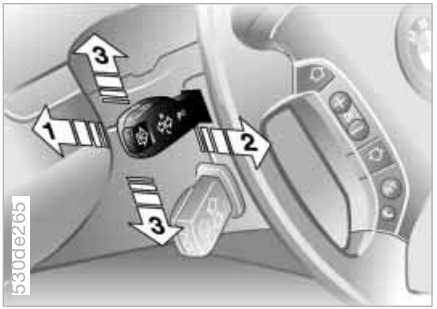

1 High beams – blue indicator lamp

2 Headlamp flasher – blue indicator lamp

3 Standing lamps

Standing lamps, left and right*

As an additional feature, you can illuminate your vehicle on either side for parking, if you wish to do so:

With the ignition key in position 0, engage the lever in the appropriate turn signal position.

Fog lamps

Front fog lamps

A green indicator lamp appears in the instrument cluster to indicate that the front fog lamps are on.

If the high beams are switched on, the fog lamps go out.

If the automatic headlamp control is activated, the low beams will automatically be switched on when the front fog lamps are switched on.◀

Online Edition for Part No. 01 41 0 157 897 - © 08/03 BMW AG

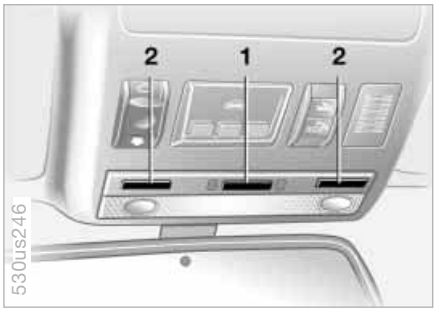

The interior lamps operate automatically.

Switching the interior lamps on and off manually

Briefly press button 1.

If you want the interior lamps to remain off all the time, press and hold the button for approx. 3 seconds.

Briefly press the button to revert to normal operation.

The button for the interior lamps in the rear passenger area only switches these lamps on and off.

Front reading lamps*

Switched on and off with the button 2 next to each lamp.

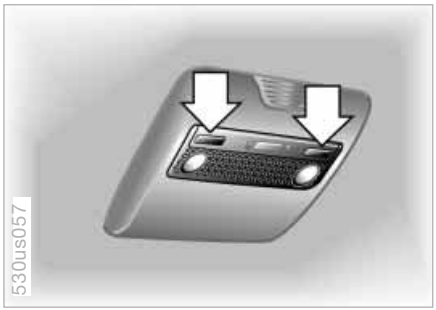

Rear reading lamps*

Switched on and off with the button next to each lamp, refer to arrows.

Footwell and cargo area lamps

The lamps are controlled in the same manner as the front interior lamps.

Front area lighting*

This lighting system in the two exterior mirrors illuminates the ground in the area near the two front doors. It is also controlled in the same manner as the front interior lamps, but it does not function while the vehicle is moving.

▷ In order to prevent battery discharge, all of the lamps in the vehicle are switched off automatically approx. 15 minutes after the ignition key is turned to position 0.◀

Light-emitting diodes LEDs

Light-emitting diodes installed behind translucent lenses serve as the light source for many of the controls and displays in your vehicle. The concept behind their operation is related to that employed for lasers.

⚠ Do not remove the covers, and never stare into the unfiltered light for several hours, as irritation of the iris could result.◀

Air conditioner

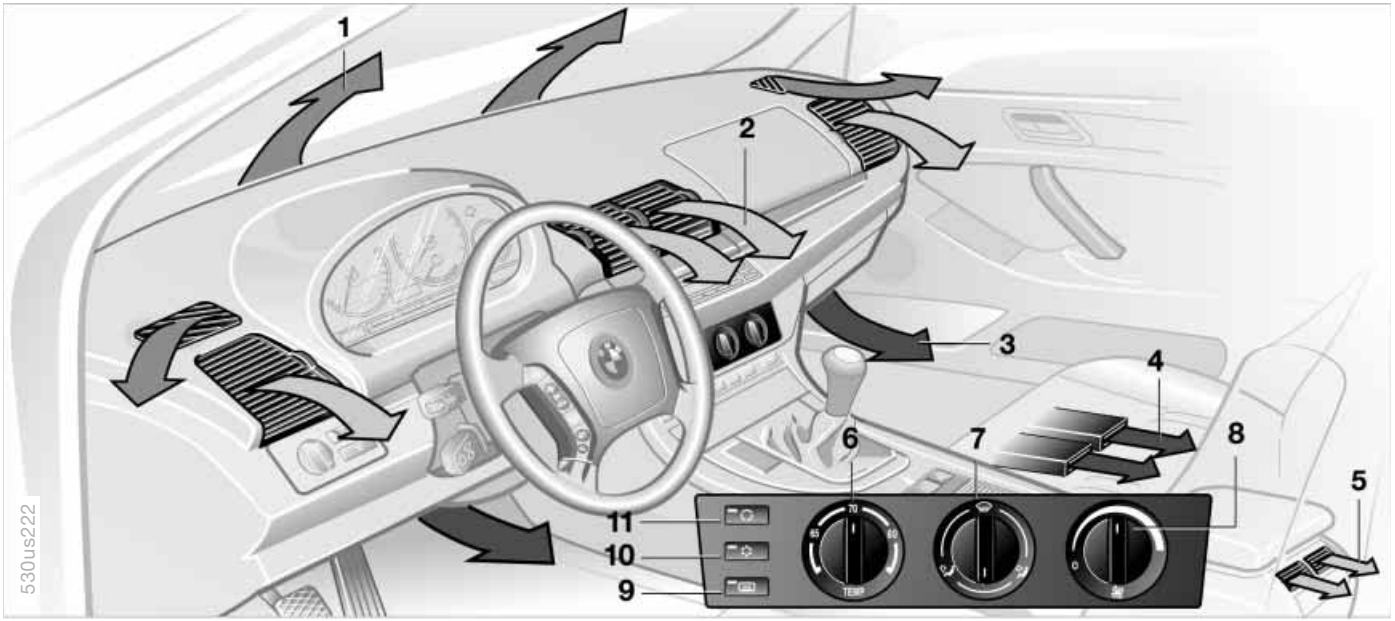

1 Airflow directed toward the windshield and side windows
2 Airflow for the upper body 102
3 Front footwell ventilation
4 Rear footwell ventilation
5 Airflow for the upper body in the rear seat 102
6 Temperature 101
7 Air distribution 101
8 Air supply 101
9 Rear window defroster 101
10 Air conditioning 101
11 Recirculated-air mode 101

Temperature

The graduations on the dial provide general reference values for the interior temperature. We recommend +70 °F / 22 °C as a comfortable setting. When you start the vehicle, the system adjusts the air to the selected temperature as quickly as possible, and then maintains that temperature constantly.

Air distribution

You can direct air to flow onto the windows, toward the upper body and into the footwell. All intermediate settings are possible. In the setting, there is a low flow of air onto the windows to keep them free of condensation.

Air supply

You can adjust the air supply through an infinitely-variable range. The heating and ventilation become more and more effective as the air supply settings are increased. In the 0 setting, the blower and climate control are switched off and the outside air supply is blocked.

Rear window defroster

When the rear window defroster is activated, the indicator lamp comes on. The rear window defroster switches off automatically.

Air conditioning

The air is cooled and dehumidified and – depending on the temperature setting – warmed again. Depending on the weather, the windshield may fog over briefly when the engine is started. You can reduce condensation forming on the windows by switching on the air conditioning.

During air conditioning condensation forms, which then exits under the vehicle. Traces of condensed water of this kind are thus normal.◀

Recirculated-air mode

You can respond to unpleasant odors outside the vehicle by temporarily blocking the outside air supply. The system then recirculates the air currently within the vehicle.

With the button in the steering wheel you can also switch over to the recirculated-air mode, refer to page 22.

If the windows fog over in the recirculated-air mode, switch the recirculated-air mode off and increase the air supply as required.◀

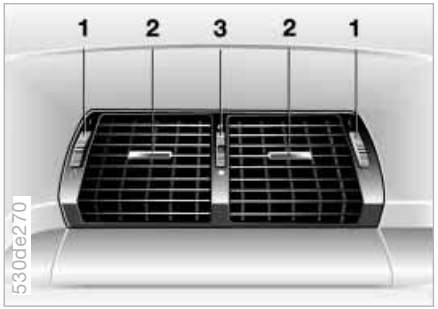

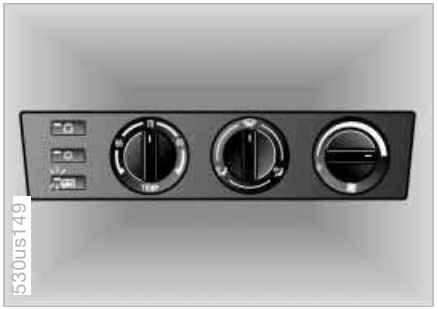

Draft-free ventilation

You can adjust the vent outlets for the upper body area to select the optimum airflow rates and directions for your personal comfort:

1 Rotary dials for opening and closing the vent outlets through an infinitely-variable range

2 Levers for adjusting airflow direction

3 With the serrated dial you can adjust the temperature of the incoming air:
▷ Turn toward blue – colder
▷ Turn toward red – warmer

Rear ventilation*

1 Serrated dial for opening and closing the vent outlets through an infinitely-variable range

2 Levers for adjusting airflow direction

The air that flows out here is somewhat cooler than the air delivered to the foot-well.

Microfilter

The microfilter removes dust and pollen from the incoming air and in the recir-culated-air mode. It is replaced by your BMW Sports Activity Vehicle center during regular maintenance. A substan-tial reduction in air supply indicates that the filter must be replaced before nor-mal maintenance.

Defrosting windows and removing condensation

1. You can specify an interior tempera-ture that is comfortable for you with the rotary temperature dial. A good starting point is +70 °F/+22 °C
2. Set the air distribution rotary dial to
3. Set the blower/air supply rotary dial completely to the right
4. Close the vent outlets in the rear seating area
5. Switch on the rear window defroster to defrost the rear window.

Online Edition for Part No. 01 41 0 157 897 - © 08/03 BMW AG

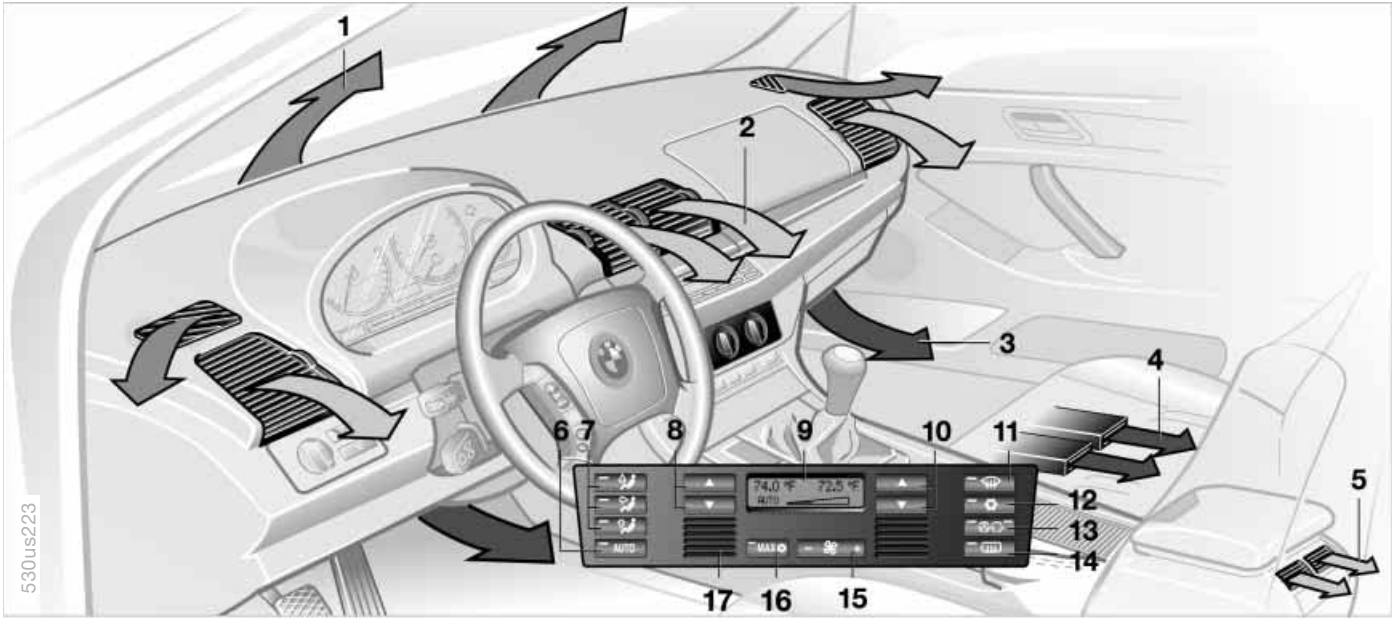

1 Airflow directed toward the windshield and side windows

2 Airflow for the upper body 107

3 Air to footwell

4 Rear footwell ventilation

5 Airflow for the upper body in the rear seat 107

6 Automatic air distribution 105

7 Individual air distribution 105

8 Temperature control – left-hand side of passenger compartment 105

9 Display for temperature and air supply 105

Automatic climate control*

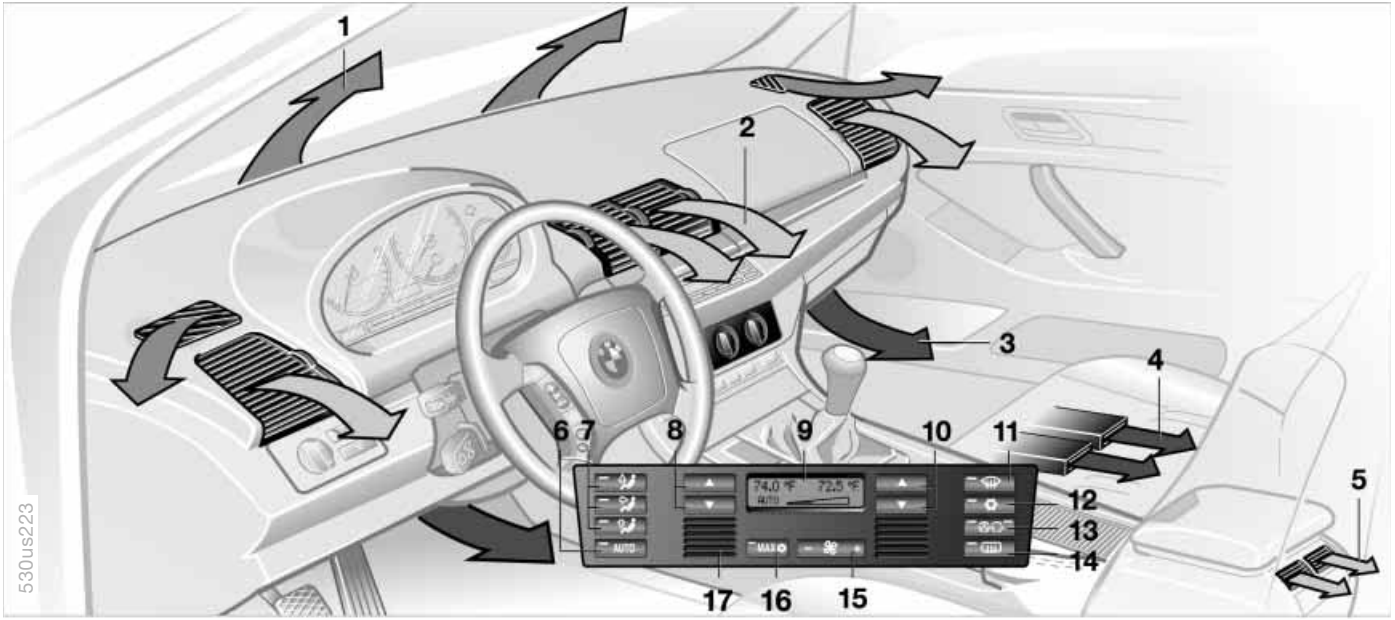

10 Temperature control – right-hand side of passenger compartment 105

11 Defrosting windshield and windows and removing condensation 105

12 Air conditioning 106

13 AUC Automatic recirculated-air control 106

14 Rear window defroster 106

15 Air supply 105

16 Maximum cooling 106 or residual heat utilization 107

17 Air grill for interior temperature sensor – please keep clear and unobstructed

Online Edition for Part No. 01 41 0 157 897 - © 08/03 BMW AG

Tips for pleasant driving

To use the automatic function, press the AUTO button 6. Select an interior temperature that is comfortable for you.

Detailed setting options are described for you in the following section.

Your BMW Sports Activity Vehicle center can program the settings of your vehicle in such a manner that, when you unlock the vehicle with your individualized key, your own personalized setting for the automatic climate control is initiated.◀

Automatic air distribution

The AUTO program assumes the adjustment of the air distribution and the air supply for you and also adapts the temperature to external influences – summer, winter – to meet preferences you can specify.

Individual air distribution

You can cancel the AUTO program by selecting specific air distribution patterns for your personal comfort, the automatic air supply remains in operation. You can direct air to flow onto the windows, toward the upper body, and into the footwell. You can reactivate the automatic air distribution mode by selecting the AUTO button.

Temperature

You can make individual temperature settings on the driver's side or the front passenger side. Your input appears in the display 9. The figures in the display provide a general indication of interior temperature. We recommend +70 °F / +22 °C as a comfortable setting, whether the air conditioner is operating or not. When you start the vehicle, this system ensures that the selected temperature is achieved as quickly as possible. It then maintains this temperature, regardless of the season.

To change the units of measurement – °F / °C – of the display, refer to page 72 or 79.

Air supply

In the AUTO program the air supply is automatically controlled, and AUTO appears in the display 9, refer to the overview on page 103. You can vary the air supply by pressing the left or right button half. When your setting is displayed by bars, the automatic air supply is switched off. Automatic air distribution maintains its setting. You can reactivate the automatic air supply by pressing the AUTO button.

When you press the left side of the button during operation at minimum blower speed all displays are canceled: the blower, heating and air conditioner are switched off. The outside air supply is closed. You can switch the system back on by pressing any button of the automatic climate control, except the MAX button 16.

Defrosting windows and removing condensation

This program quickly removes ice and condensation from the windshield and the side windows.

Online Edition for Part No. 01 41 0 157 897 - © 08/03 BMW AG

Air conditioning

The air is cooled and dehumidified and – depending on the temperature setting – warmed again. Depending on the weather, the windshield may fog over briefly when the engine is started. You can reduce condensation forming on the windows by switching on the air conditioning.

During air conditioning condensation forms, which then exits under the vehicle. Traces of condensed water of this kind are thus normal.◀

Maximum cooling

You will get maximum cooling capacity using this program if the engine is running and the outside temperature is above approx. 41 °F/5 °C.

The temperature display 9 jumps to +60 °F/16 °C, the system switches over to the recirculated-air mode, and the air streams out of the vent outlets with the maximum air supply. That is why you need to keep these open if you select this program.

AUC Automatic recirculated-air control

You can respond to unpleasant odors or pollutants in the immediate environment by temporarily suspending the supply of outside air. The system then recirculates the air currently within the vehicle. Press the button repeatedly to run through the following control sequence

- ▷ Indicator lamps off: outside air supply operational
- ▷ Left-hand indicator lamp on – AUC mode: the system recognizes pollutants in the outside air and blocks the flow of air when necessary. The system then recirculates the air currently within the vehicle.
  Depending on the air quality, the automatic system then switches back and forth between outside air supply and recirculation of the air within the vehicle
- ▷ Right-hand indicator lamp on: the outside air supply into the vehicle is completely blocked. The system then recirculates the air currently within the vehicle.

With the button on the steering wheel you can also switch between Off and recirculated-air mode or AUC and recirculated-air mode, refer to page 22.

If the windows fog over in the recirculated-air mode, switch the recirculated-air mode off and increase the air supply as required.◀

Rear window defroster

When the rear window defroster is activated, the indicator lamp comes on. The rear window defroster switches off automatically.

Online Edition for Part No. 01 41 0 157 897 - © 08/03 BMW AG

Residual heat

The heat which is stored in the engine is utilized for heating the interior when the engine has been switched off – while waiting at a railroad crossing, for instance.
You can adjust the automatic climate control settings in ignition key position 1. With the ignition key in position 0, the system automatically directs heated air to the windshield, side windows and footwells.

This function may be activated when the outside temperature is below approx. 59 °F/15 °C, the engine is at operating temperature, and the battery is adequately charged. The LED on the button will light up when all conditions have been met.◀

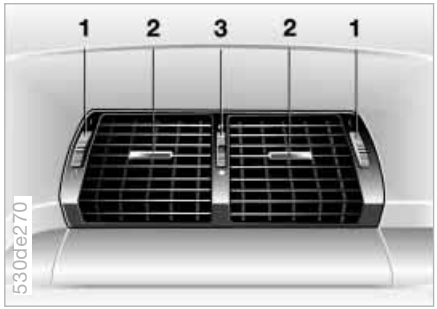

Draft-free ventilation

You can adjust the vent outlets for the upper body area to select the optimum airflow rates and directions for your personal comfort:

1 Rotary dials for opening and closing the vent outlets through an infinitely-variable range

2 Selector levers for airflow direction

3 With the serrated dial you can adjust the temperature of the incoming air:
▷ Turn toward blue – colder
▷ Turn toward red – warmer

Rear climate control*

1 Air supply

2 Temperature

3 Adjusting the direction of the airflow

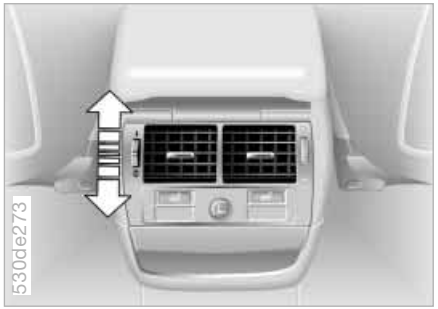

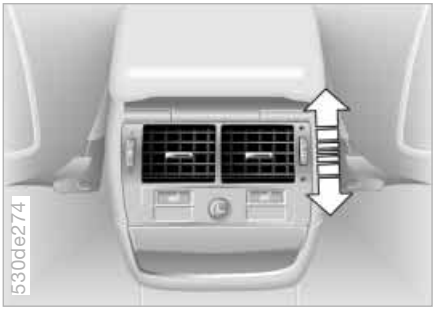

Air supply

0 Blower off

I Maximum blower speed

You can adjust the air supply for the vent outlets through an infinitely-variable range between the 0 and I settings.

In the 0 setting, the blower is switched off and the supply of air through the vent outlets is blocked.

Individual adjustments on the front-seat control elements influence the air supply for rear passenger area climate control.

Temperature

Passengers in the rear seating area can adjust their own temperature for the vent outlets:

▷ Turn toward blue – colder
▷ Turn toward red – warmer.

When you start the vehicle, this system ensures that the selected temperature is achieved as quickly as possible.
It then maintains this temperature, regardless of the season.

▷ A temperature setting is only possible when the blower is switched on, not in the 0 setting.◀

Microfilter/activated-charcoal filter

The microfilter removes dust and pollen from the incoming air. The activated-charcoal filter provides additional protection by filtering gaseous pollutants from the outside air. Your BMW Sports Activity Vehicle center replaces this combined filter as a standard part of your scheduled maintenance. A substantial reduction in air supply indicates that the filter must be replaced before normal maintenance.

Online Edition for Part No. 01 41 0 157 897 - © 08/03 BMW AG

Roller sun blinds*

Roller sun blinds for rear side windows*

Use the strap to pull out the blinds, then hook them in the provided attachment.

With roller sun blinds attached, do not open the windows during travel. The blinds may otherwise be damaged by the wind.◀

Independent ventilation*

You can use this system to ventilate the interior and lower its temperature, using the blower of the independent ventilation or of the automatic climate control.

The independent ventilation is operated via the MID Multi-Information Display, refer to page 83 or via the onboard computer, refer to the separate Owner's Manual.

You can set two different times for the system to start; it will remain active for 30 minutes. You can also switch it on and off directly. Since the system uses a substantial amount of electrical current, you should refrain from switching it on twice in succession without allowing the battery to be recharged in normal operation between use.

When a preselected activation time is set, the independent ventilation is operational at outside temperatures above +60 °F/+16 °C, or by direct switch activation.

The air enters the passenger compartment through the vent outlets in the instrument cluster, which can be adjusted for both direction and airflow. Therefore, the vent outlets must be open for the system to operate.

Online Edition for Part No. 01 41 0 157 897 - © 08/03 BMW AG

Integrated universal remote control

The concept

The integrated universal remote control can replace as many as three hand-held transmitters for various remote-controlled accessories, such as door openers and house alarm systems. The integrated universal remote control recognizes and learns the transmitted signal of each of the original hand-held transmitters.

The signal of an original hand-held transmitter can be programmed on one of the three memory buttons 1. Following that, each of the devices can be actuated with the appropriately-programmed memory button 1. The indicator lamp 2 flashes to confirm transmission of the signal.

If the vehicle is sold, the memory buttons 1 should be cleared as described on page 112.

To prevent possible damage or injury, before programming or using the integrated universal remote control, always inspect the immediate area to make certain that no people, animals or objects are within the travel range of the device. Also, comply with the safety precautions of the original hand-held transmitter.◀

To Canadian residents:
During programming, your hand-held transmitter may automatically stop transmitting after two seconds, which may not be long enough to program the integrated universal remote control. If you are programming from one of these handheld transmitters, the integrated universal remote control's light may begin to flash in a series of double-flashes. If this occurs, continue to hold the button of the integrated universal remote control while you reactivate your hand-held transmitter. You may have to repeat this function several times while programming.◀

Checking the compatibility

If you see this symbol on the packaging or in the manual supplied with the original hand-held transmitter, it is safe to assume that it is compatible with the integrated universal remote control.

A list of compatible hand-held transmitters is available via fax polling at +49 (0)6838 907283 3333. For details, call the toll-free HomeLink Hotline at +49 (0)6838 907 277 or at 0800 0466 35465 in Germany.

HomeLink is a registered trademark of Johnson Controls.

Online Edition for Part No. 01 41 0 157 897 - © 08/03 BMW AG

Programming

1 Memory buttons

2 Indicator lamp

Fixed-code hand-held transmitter

1. Switch on the ignition
2. For initial use: press both outer buttons 1 for approx. 20 seconds, maintaining pressure until the indicator lamp 2 starts to flash. The three memory buttons 1 are cleared
3. Hold the original hand-held transmitter at a distance of approx. 2 to 8 in/ 5 to 20 cm from the memory buttons 1

   ▷ The required distance between the hand-held transmitter and memory buttons 1 depends on the relevant system of the original hand-held transmitter used.◀
4. Simultaneously press the transmit button on the original hand-held transmitter and the desired memory button 1 of the integrated universal remote control. Initially, the indicator lamp 2 flashes slowly. Release both buttons as soon as the indicator lamp 2 flashes rapidly. If the indicator lamp 2 does not flash rapidly after approx. 15 seconds, change the distance
5. To program other original hand-held transmitters, repeat steps 3 and 4.

The corresponding memory button 1 is now programmed with the signal of the original hand-held transmitter.

The device can be operated as of ignition on.

▷ If the device cannot be operated after repeated programming, check whether the original hand-held transmitter uses an alternating-code system. To do so, either read the instructions of the original hand-held transmitter or press and hold down the programmed memory button 1 of the integrated universal remote control.

If the indicator lamp 2 on the integrated universal remote control flashes quickly for a brief period and then remains lit up for approx. two seconds, this indicates that the original hand-held transmitter is equipped with an alternating code. In the case of an alternating-code system, program the memory buttons 1 as described at the section on alternating-code hand-held transmitters.
If you have additional questions, please consult your BMW Sports Activity Vehicle center or call 1-800-355-3515.
You can also visit this website www.bmwusa.com ◀

Alternating-code hand-held transmitter

To program the integrated universal remote control, consult the Owner's Manuals for the equipment to be set. You will find information there on the possibilities for synchronization.
When programming alternating-code hand-held transmitters, please observe the following supplementary instructions:

▷ Programming will be easier with the aid of a second person.◀

1. Park your vehicle within the range of the remote-controlled device
2. Program the integrated universal remote control as described at the section on fixed-code hand-held transmitters
3. Localize the button on the receiver of the device you want to set up, e.g. on the upper section of the motor
4. Press the button on the receiver of the device you want to set up. After step 4, you have approx. 30 seconds for step 5
5. Press the programmed memory button 1 on the integrated universal remote control three times.

The corresponding memory button 1 is now programmed with the signal of the original hand-held transmitter.

▷ If you have any additional questions, please contact your BMW Sports Activity Vehicle center.◀

Clearing memory buttons

Individual memory buttons 1 cannot be cleared. However, you clear all three memory buttons 1 together as follows:

Press both outer buttons 1 of the integrated universal remote control for approx. 20 seconds, maintaining pressure until the indicator lamp 2 starts to flash.

User information

Do not use this integrated universal remote control with any garage door opener that lacks safety – stop – and – reverse – features as required by federal safety standards, this includes any garage door opener model manufactured before April 1st, 1982.

This device complies with Section 15 of the FCC Rules. Operation is subject to the following two conditions: as defined in the regulations, this device must not emit harmful interference, and must be shielded against interference from external sources to prevent unauthorized or inadvertent activation.

Online Edition for Part No. 01 41 0 157 897 - © 08/03 BMW AG

Portable phone*

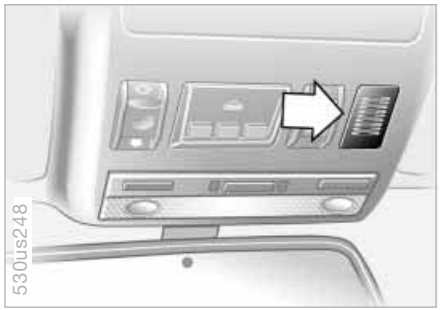

Hands-free system

On vehicles with telephone preparation*, the hands-free microphone is located in the headliner.

For further information on the portable phone, refer to the telephone Owner's Manual.

Glove compartment

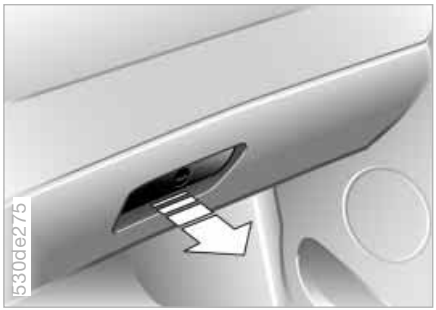

Opening

Pull the handle. The lamp inside the glove compartment comes on.

Closing

Fold the cover up.

To prevent injury in the event of an accident, close the glove compartment immediately after use.◀

Engaging the locks

Use one of the central keys. A central key is also required for unlocking.

If you turn over only your spare key for valet parking, for example, refer to page 28, access to the glove compartment is not possible.◀

Rechargeable flashlight

Located on the left-hand side of the glove compartment.
Features integral overload-protection, so it can be left in its holder continuously.

To avoid completely discharging and possibly damaging the lamp, always ensure that it is switched off before inserting it in the socket.◀

Storage compartments

You will find two storage compartments in the armrest between the front seats.

To open the top compartment:
Press the button, refer to arrow 1.
You will find a portable phone* in this compartment.

To move the armrest or open the lower compartment:
Pull the handle, refer to arrow 2.
In this compartment, you will find a coin tray and a storage compartment* for cassettes or CDs.

You will find additional storage compartments in all of the doors as well as on the backrests of the front seats.

Beverage holder

Front

Below the sliding cover, refer to illustration. Remove the insert which is a compartment for storing pens.

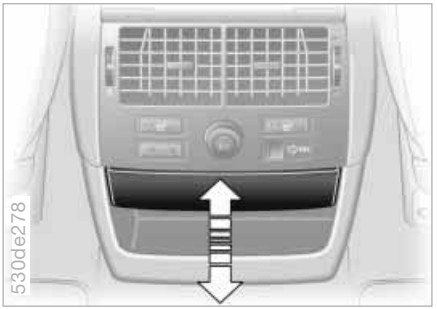

Rear

At the end of the center console under the lighter.

Briefly press to open; push back inward to close.

Online Edition for Part No. 01 41 0 157 897 - © 08/03 BMW AG

Glasses compartment

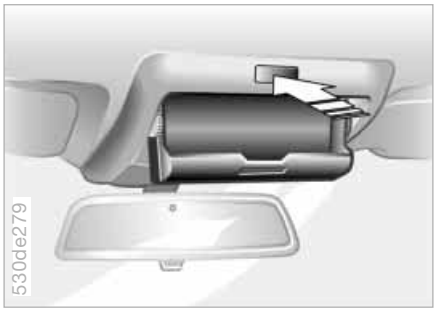

Press the button to open; fold upward to close.

Ashtray, front

Emptying

Press the edge of the lid, refer to arrow: the ashtray moves up and can be removed.

Cigarette lighter, front

Press the lighter 1 in.
The lighter can be removed as soon as it retracts.

⚠ Hold or briefly press the hot cigarette lighter by the knob only. Holding or touching it in other areas could result in burns.
The cigarette lighter remains operational when the ignition key has been removed. For this reason, do not leave unsupervised children in the vehicle.◀

Lighter socket

This socket is suitable for attaching power supplies for flashlights, car vacuum cleaners and other appliances up to a rating of approx. 200 watts at 12 volts. Avoid damaging the socket due to inserting plugs of different shapes or sizes.

You will find additional power outlets in the cargo area, refer to page 122.

Online Edition for Part No. 01 41 0 157 897 - © 08/03 BMW AG

Ashtray, rear

Emptying

Remove the insert tray.

Cigarette lighter, rear

Press the lighter in.
The lighter can be removed as soon as it retracts.

⚠ Hold or briefly press the hot cigarette lighter by the knob only. Holding or touching it in other areas could result in burns.
The cigarette lighter remains operational when the ignition key has been removed. For this reason, do not leave unsupervised children in the vehicle.◀

Online Edition for Part No. 01 41 0 157 897 - © 08/03 BMW AG

Ski bag*

The ski bag allows the safe and clean transport of up to 4 pairs of standard skis or up to two snowboards.

With the length of the ski bag and the additional space in the cargo area, you can store skis with a length of up to 6.8 ft/2.1 m. Because of the tapered shape of the bag, the ski bag can only accommodate two pairs of skis with a length of 6.8 ft/2.1 m.

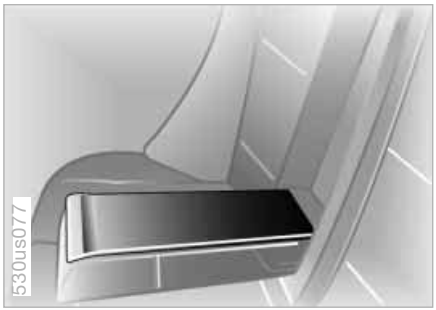

Loading

1. Fold the center armrest outward. Loosen the trim from the upper Velcro® fastener and place it on the armrest
2. Press button 1 downward and swing the cover forward
3. Press button 2: the cover in the cargo area is unlocked.
   In conjunction with pull-out cargo floor, refer to page 122: pull out floor, release cover and push back floor again – the floor then conceals the cover
4. Extend the ski bag between the front seats. The zipper provides convenient access to the inside of the bag, or can also be left open to promote drying.

To store the ski bag, perform the above steps in reverse sequence.

Ski bag*

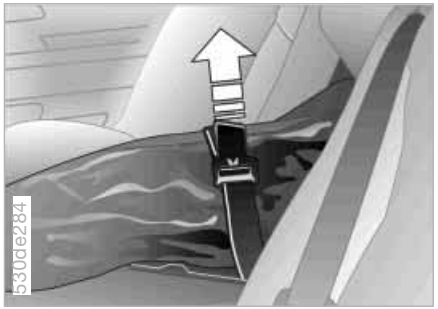

Securing the load

Secure the bag's contents by tightening down the strap at the buckle.◀

Please be sure that the skis are clean before loading them into the bag. Be careful to avoid damage from sharp edges.

If the cover in the cargo area is concealed by the pull-out cargo floor, do not fold the larger rear backrest down. If you do so, it will damage the cover.◀

Cargo area

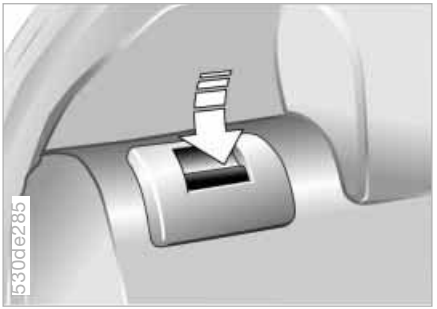

Fold the rear backrests down

Reach into the recess and pull forward, refer to arrow.

When you fold back the backrest, be sure that the catch engages securely. The red warning indicator disappears in the recess when the catch is engaged.
The center safety belt can be retracted only when the larger backrest is engaged.◀

Online Edition for Part No. 01 41 0 157 897 - © 08/03 BMW AG

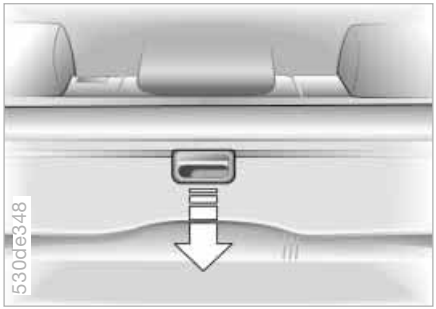

Roll-up cover

Pull out the roll-up cover and hook it into the brackets at the rear.

You can carry light objects such as items of clothing on the roll-up cover.

Do not place heavy or hard objects on the roll-up cover. If you do so, they could already pose a danger to vehicle occupants during braking or evasive maneuvers.
Do not allow the roll-up cover to snap back, as otherwise it could be damaged.◀

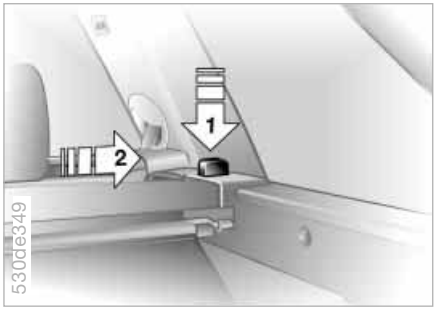

Removing roll-up cover

1. Unlock the case with the button, refer to arrow 1, lift it out of the bracket on the side and hold it in place on the opposite side with the other hand
2. Then push the case toward the side window, refer to arrow 2. This pulls it out of the second bracket and enables it to be removed.

Installation

Lay the case in the two side brackets and then press down until it engages.

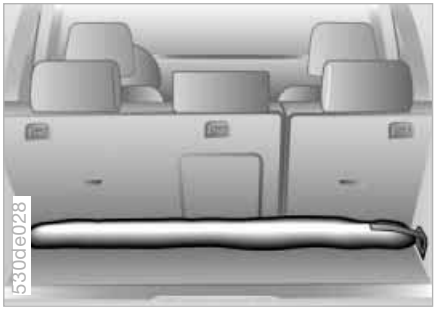

Partition net*

1. Remove the bag with the partition net from the retainer by releasing the hooks from the lashing eyes on both sides

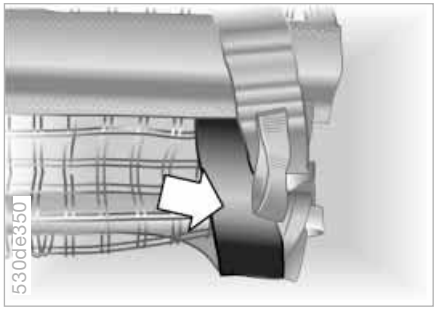

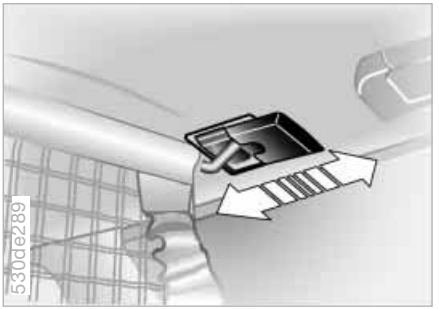

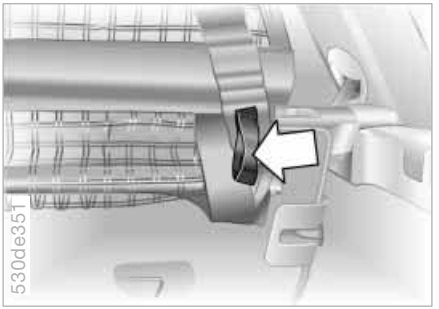

2. Remove the partition net from the bag, unroll it half way and hook it into the retaining strap on both sides, refer to arrow

▷ Note how the partition net is stored in the bag and secured in the vehicle so that you can return everything to its proper place again after use.
If your vehicle has a pull-out cargo floor, observe the note on page 122.◀

3. Slide back the covers on the retainers for the partition net on both sides of the roof, refer to arrow
4. Insert the curved ends of the partition net rod in the retainers on both sides
5. Now you can slide the covers toward the front again, refer to arrow

6. Pull down the partition net downward on both sides by the loop, refer to arrow, and hook the hook into the eye on the backrest

▷ The case with the roll-up cover is not shown in the illustration. With the case removed it is easier to hook the hooks of the partition net onto the backrest.◀

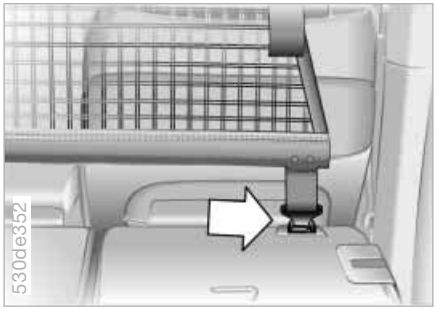

7. When the rear backrests are folded down, you can unhook the partition net from the retaining straps, completely unroll the partition net, insert it in the front retainers on the roof and attach the three hooks into the eyes.
   The illustration shows securing at the bottom right as an example.

Side covers

Pull the handle to open the side covers.

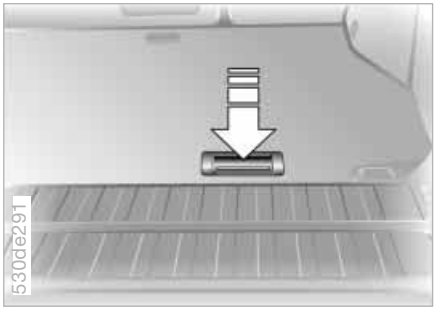

Floor cover

To access the spare wheel.

To open: press the recess in the handle, refer to arrow, and raise the cover with the handle.

Online Edition for Part No. 01 41 0 157 897 - © 08/03 BMW AG

Fold the floor cover up

Disengage the loop end on the lower side of the floor cover and hook it in with the catch on the upper frame of the liftgate cutout.

Before swinging down the floor cover, reengage the loop end in the retainer on the underside of the floor cover.

Power outlets

When you fold the cover caps up, you have access to additional power outlets.

You can use the power outlets for flashlights, car vacuum cleaners or other automotive appliances with up to approx. 200 watts at 12 volts. Avoid damage to the socket caused by inserting plugs of a different shape or size.

Also refer to page 115.

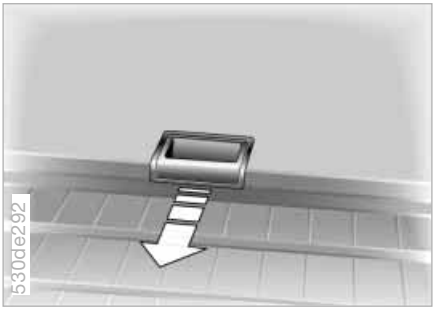

Pull-out cargo floor*

To release, pull the handle recess upward. Then pull the floor out.

Do not drive when the cargo floor is pulled out.
Do not release the cargo floor on steep grades. If you do, it could extend automatically and cause personal injuries. A load which is not properly secured could begin to slide if the floor extends automatically and then drop to the ground as a result of the rapid braking of the cargo floor at the limit stop.◀

When it is extended, you can load the cargo floor:

▷ With up to 990 lbs/450 kg, distributed evenly across the entire surface
▷ With up to 330 lbs/150 kg on the rear edge.

⚠ Do not overload the cargo floor when it is extended. If you do so, it could cause damage.
When you slide the cargo floor back in, do not grasp it on the bottom. If you do so, there is a risk of personal injury.◀

Raise cargo floor

For access to the spare wheel or other stored items:

Swing the cargo floor up and secure it with the rod, refer to illustration.

▷ If your vehicle has a partition net: take the bag with the partition net out of the retainer, refer to page 119, before you raise the cargo floor panel. Otherwise, the bag could slide downward.◀

To avoid loading the tires beyond their approved carrying capacity, never overload the vehicle. Overloading can lead to overheating and increases the rate at which damage develops inside the tires. The ultimate result can assume the form of a sudden air loss.◀

Determining loading limit

1. Locate the following statement on your vehicle's placard*:

   The combined weight of occupants and cargo should never exceed XXX lbs. or YYY kg, as otherwise the vehicle may be damaged and unstable driving conditions may result.◀

2. Determine the combined weight of the driver and passengers that will be riding in your vehicle
3. Subtract the combined weight of the driver and passengers from XXX lbs. or YYY kg
4. The resulting figure equals the available amount of cargo and luggage load capacity.
   For example, if the XXX amount equals 1,400 lbs./635 kg and there will be five 150 lbs./70 kg passengers in your vehicle, the amount of available cargo and luggage load capacity is 650 lbs./295 kg:
   1,400 lbs./635 kg minus
   750 lbs./340 kg = 650 lbs./295 kg
5. Determine the combined weight of luggage and cargo being loaded on the vehicle. That weight may not safely exceed the available cargo and luggage load capacity calculated in step 4
6. If your vehicle will be towing a trailer, load from your trailer will be transferred to your vehicle. Consult the manual for transporting a trailer to determine how this may reduce the available cargo and luggage load capacity of your vehicle.

Online Edition for Part No. 01 41 0 157 897 - © 08/03 BMW AG

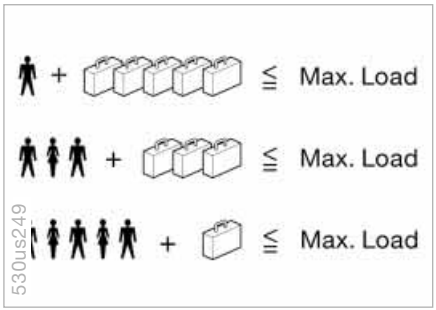

Load:

The permitted load is the total of the weight of occupants and cargo/luggage. The greater the weight of occupants, the less cargo/luggage can be transported.

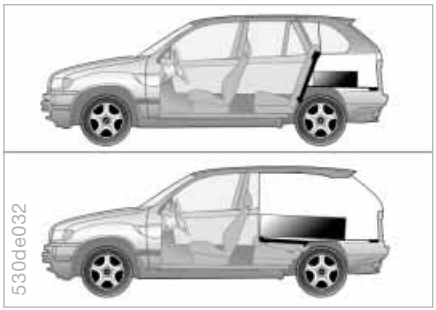

Stowing cargo

- ▷ Position heavy cargo as far forward as possible – directly behind the backrests – and as low as possible
- ▷ Cover sharp edges and corners
- ▷ Do not pile objects higher than the top edge of the backrest
- ▷ Fasten the partition net, refer to page 119, and ensure that carried items cannot pass through the partition net
- ▷ If you are transporting very heavy loads when the rear seat is not occupied, secure the outer safety belts in the opposite buckles.

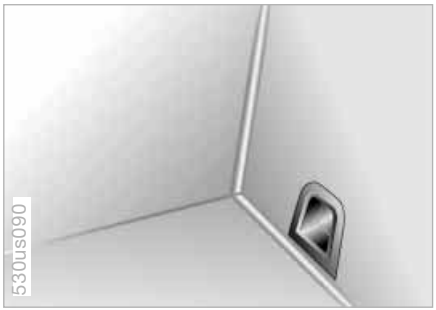

Securing the load

- ▷ Secure smaller, light pieces with the luggage straps or a luggage net*, or use flexible straps, refer to page 36
- ▷ Heavy-duty cargo straps* for securing larger and heavier objects are available at your BMW Sports Activity Vehicle center. The lashing eyes provided at the corners of the cargo area serve for mounting these load-securing devices
- ▷ Read and comply with the information enclosed with the load-securing devices.

Always position and secure the load correctly. If you do not, it can even endanger the passengers during braking or evasive maneuvers.
Do not exceed the permissible gross vehicle weight and the permissible axle loads, refer to page 172. If you do, the operating safety of the vehicle is no longer ensured and you are in violation of the law.
You should never transport heavy or hard objects unsecured in the passenger compartment, as they could fly around and pose a safety hazard to the vehicle's occupants even during abrupt braking or evasive maneuvers.◀

Roof-mounted luggage rack*

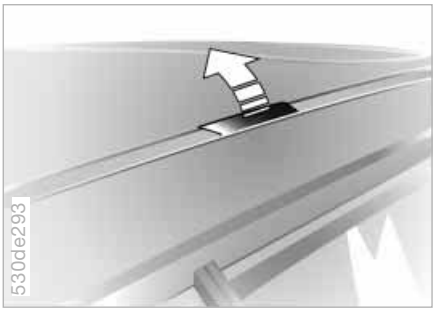

A special rack system is available as an option for your BMW. Please comply with the precautions included with the installation instructions.

Mounting points

Access to the mounting points:
To fold up the covers, refer to arrow, please use the tool which is provided with the rack system.

Cargo loading and driving hints

Roof-mounted luggage racks raise the center of gravity of the vehicle when they are loaded. For this reason, they exercise a major effect on the vehicle's handling and steering response.

You should therefore always remember not to exceed the approved roof weight, the approved gross vehicle weight or the axle loads when loading the rack.

You will find the specifications under Technical data on page 172.

Make sure that the load is not too heavy, and attempt to distribute it evenly. Always load the heaviest pieces on the bottom. Be sure that adequate clearance is maintained for raising the glass roof, and that objects do not project into the opening path of the luggage compartment lid.

Always ensure that roof-mounted loads are tightly secured, as loose loads can shift or even fly off the roof, posing a serious hazard for following traffic.◀

Drive smoothly. Avoid sudden acceleration and braking maneuvers. Take corners gently.

Online Edition for Part No. 01 41 0 157 897 - © 08/03 BMW AG

Online Edition for Part No. 01 41 0 157 897 - © 08/03 BMW AG

Online Edition for Part No. 01 41 0 157 897 - © 08/03 BMW AG

Overview

Controls and features

Operation, maintenance

Owner service procedures

Technical data

Index

Online Edition for Part No. 01 41 0 157 897 - © 08/03 BMW AG

Break-in procedures

To ensure that your vehicle provides maximum economy throughout a long service life, we request that you observe the following instructions:

Engine and differential

Up to 1,200 miles/2,000 km:
Drive at varying engine speeds and road speeds, but do not exceed 4,500 rpm and the following road speeds during this initial period:

6-cylinder engines: 100 mph/160 km/h
8-cylinder engines: 106 mph/170 km/h

Obey your local and state maximum speed limits.

Avoid full-throttle operation and use of the transmission's kickdown mode during these initial miles.

Once you have driven 1,200 miles/ 2,000 km, the engine and vehicle speeds can be gradually increased.

You should also comply with these break-in procedures should the engine or one of the differentials be replaced later in the course of the vehicle's service life.

Tires

Due to technical factors associated with their manufacture, tires do not achieve their full traction potential until after an initial break-in period. Therefore, drive reservedly during the first 200 miles/300 km.

Obey your local and state maximum speed limits.

When the vehicle is operated on wet or slushy roads, a wedge of water may form between the tire and the road surface. This phenomenon is referred to as hydroplaning and can lead to partial or complete loss of traction, vehicle control and braking effectiveness. Reduce your speed on wet roads.◀

Brake system

Brakes require an initial break-in period of approx. 300 miles/500 km to achieve optimal contact and wear patterns between brake pads and rotors.

To break in the separate handbrake drums, apply the handbrake lightly when coasting to a standstill at a traffic signal, for instance, provided that traffic conditions allow you to do so.
To avoid corrosion, repeat this procedure from time to time.

The brake lamps do not light up when the handbrake is applied.
Vacuum for the brake system servo unit on your BMW is available only when the engine is running. When you move the vehicle with the engine switched off – when towing, for instance – substantially higher levels of pedal force will be required to brake the vehicle.◀

Online Edition for Part No. 01 41 0 157 897 - © 08/03 BMW AG

On bad roads

When you are driving on bad roads, there are a few points which you should strictly observe – for your own safety, for that of your passengers, and for the safety of the vehicle:

Driving on unpaved terrain can cause damage to the vehicle.◀

▷ Always adjust your driving speed to the road conditions – the rougher or steeper the road surface, the lower your speed should be

▷ You can operate your vehicle on uphill and downhill gradients with a maximum slope of 50 %. If you want to drive on uphill or downhill gradients of this kind, make sure beforehand that the engine oil and coolant levels are near the max mark, refer to pages 143 and 145.
For very steep downhill driving, use HDC Hill Descent Control, refer to page 93.
It is possible to start off on grades of up to 32 %.
The permitted side tilt is also 50 %

▷ While driving, watch carefully for obstacles such as rocks or holes.
Try to avoid these obstacles whenever possible

▷ Please note that, for example on crests and bumpy roads, the body can make ground contact.
The ground clearance of the vehicle is:
– 8 in/200 mm with up to four persons
– 7 in/180 mm fully loaded – without self-leveling suspension

▷ Only drive through water up to a maximum depth of 20 in/50 cm and only at walking speed, making sure not to stop in the process.
After leaving the water, press on the footbrake gently several times while driving at a low speed. The brake applications will help to dry the brakes, thus preventing a reduction in braking performance caused by the moisture.

Back onto the paved road

In recommending that you observe the following points after driving on adverse road surfaces, it is not as a beauty treatment for your BMW. Instead, it is intended for the maintenance of driving safety:

▷ Wash the body

▷ Clean mud, snow, ice etc. from the wheels and tires and check the wheels for damage

▷ Check to determine whether rocks, gravel or accumulations of dirt on the brake rotors and calipers could influence braking performance. Remove all such foreign objects

▷ In order to clean the brake rotors, apply the footbrake gently several times while driving at a low speed. Be sure that following traffic is not endangered by this

▷ For cleaning the handbrake, apply the lever slightly at approx. 25 mph/ 40 km/h and continue to drive for approx. 200 yards/200 meters, provided that traffic conditions allow you to do so.

Online Edition for Part No. 01 41 0 157 897 - © 08/03 BMW AG

Parking the vehicle

Condensation forms in the air conditioner system during operation, and then exits under the vehicle. Traces of condensed water under the vehicle are thus normal.

Brakes

Do not drive with your foot resting on the brake pedal. Even light but consistent pedal pressure can lead to excessively high temperatures, brake wear and possibly even brake failure.◀

Road hazards

If road hazards, obstacles or curbs are unavoidable, only drive over them very slowly and carefully, as otherwise the wheels and suspension parts, especially on vehicles fitted with low profile tires, can be damaged.◀

For more information on wheels and tires, refer to page 138.

Hydroplaning

When driving on wet or slushy roads, reduce road speed. If you do not, a wedge of water can form between tires and road surface. This state can cause a partial or total loss of contact with the road surface, of braking control and of control over the vehicle.◀

Avoiding fire danger

Extreme temperatures occur at the catalytic converter on this and every catalyst-equipped vehicle. Do not remove the heat shields installed adjacent to various sections of the exhaust system, and never apply undercoating to them. When driving, standing at idle and while parking take care to avoid possible contact between a hot exhaust system and any highly flammable materials such as hay, leaves, grass, etc. Such contact could lead to a fire, and with it the risk of serious property damage as well as personal injury.◀

Safe braking

Emergency stops

You brake most effectively when you apply maximum pedal pressure in situations requiring it: emergency stops. Since the vehicle maintains steering responsiveness, you can nevertheless avoid possible obstacles with a minimum of steering effort.

Pulsation at the brake pedal combined with sounds from the hydraulic circuits indicates to the driver that ABS is in its active mode.

Brake fluid level

If the brake fluid level is too low and brake pedal travel has become longer, there may be a defect in one of the two brake system's hydraulic circuits.

Proceed to the nearest BMW Sports Activity Vehicle center. Here increased pressure on the brake pedal may be required, and slight pulling to the side and longer braking distances may result. Please remember to adapt your driving style accordingly.◀

Online Edition for Part No. 01 41 0 157 897 - © 08/03 BMW AG

Disc brakes

When the vehicle is driven only occasionally, during extended periods when the vehicle is not used at all, and in operating conditions where brake applications are less frequent, there is an increased tendency for corrosion to form on rotors, while contaminants accumulate on the brake pads. This occurs because the minimal pressure which must be exerted by the pads during brake applications to clean the rotors is not reached.

If the brake rotors are corroded, they will tend to respond to braking with a pulsating effect which even extended application will fail to cure.

When driving in wet conditions and in heavy rain, it is advisable to apply light pressure to the brake pedal from time to time. Monitor traffic conditions to ensure that this maneuver does not endanger other road users. The heat generated in this process helps dry the pads and rotors to ensure that The braking force is then immediately available when required.

Extended or steep mountain descents should be driven in the gear in which only minimal periodic brake application is required. This avoids excessive strain on the brakes and possible impairment of the braking effect.

Do not coast with the clutch depressed or with the transmission or selector lever in neutral. Do not drive with the engine switched off. The engine then provides no braking effect, and there is no power-assist for braking or steering.
BMW recommends having brake inspections performed at a BMW Sports Activity Vehicle center only.
If you do not, parts of the four-wheel drive system could be damaged.
Never allow floor mats, carpets or any other objects to protrude into the area around the accelerator, clutch and brake pedals and obstruct their movement.◀

Brake pads

For your own safety: use only brake pads that BMW has released for your particular vehicle model. BMW cannot evaluate non-approved brake pads to determine if they are suited for use, and therefore cannot ensure the operating safety of the vehicle if they are installed.◀

Online Edition for Part No. 01 41 0 157 897 - © 08/03 BMW AG

Tire inflation pressure

Information for your safety

It is not merely the tire's service life, but also driving comfort and – to a great extent – driving safety that depend on the condition of the tires and the maintenance of the specified tire pressure.

⚠ Check the tire inflation pressure regularly, including on the spare wheel: at least every two weeks and before beginning a longer trip. If this is not done, incorrect tire pressures can cause driving instability and tire damage, ultimately resulting in an accident. Do not drive with a depressurized, i.e. flat tire. A flat tire greatly impairs steering and braking response, and can lead to complete loss of control over the vehicle.◀

Checking inflation pressure

Only check tire inflation pressure when the tires are cold. i.e. after driving a maximum of 1.25 miles/2 km or when the vehicle has been parked for at least 2 hours. When tires are warm, the tire inflation pressure increases.

Inflation pressure for original equipment tires

You will find tire inflation pressures on the inside door pillar.

Inflation pressure for other tire sizes

The table on the next page provides the correct inflation pressures for tires at ambient temperature, in psi/kilopascal.

Online Edition for Part No. 01 41 0 157 897 - © 08/03 BMW AG

Tire inflation pressure

BMW	Tires All pressure specifications in the table are indicated in psi/ kilopascal with cold tires, cold = ambient temperature			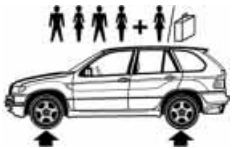	
X5 3.0i X5 4.4i	235/65 R 17 104 H M+S 255/55 R 18 105 H, V M+S 255/55 R 18 105 V 235/65 R 17 104 Q M+S 255/55 R 18 105 Q M+S	32/220	32/220	32/220	39/270
	Front: 255/50 R 19 103 V	32/220	–	32/220	–
	Rear: 285/45 R 19 107 V	–	32/220	–	39/270
	Front: 275/40 R 20 102 W	32/220	–	32/220	–
	Rear: 315/35 R 20 106 W	–	32/220	–	39/270

All-season tires, M+S, should be inflated to the same pressures as summer tires. Figures as stated here apply to the manufacturer's approved or recommended tires. Your BMW Sports Activity Vehicle center will be happy to provide information on request.

Online Edition for Part No. 01 41 0 157 897 - © 08/03 BMW AG

Tire identification marks

Knowledge of the labeling on the side of the tire makes it easier to identify and choose the right tires.

Tire size

e.g. 235/65 R 17 104 H

Nominal width in mm

Aspect ratio in %

Belted construction radial

Rim diameter in inches

Load index, not with ZR tires

Speed code letter, with ZR tires before the R

Speed code letter:

Q = up to 105 mph/160 km/h
T = up to 118 mph/190 km/h
H = up to 131 mph/210 km/h
V = up to 150 mph/240 km/h
W = up to 167 mph/270 km/h

Tire Identification Number

Tires with DOT codes meet the guidelines of the U.S. Department of Transport.

DOT code:

e.g. DOT xxxx xxx 3603

Manufacturer's code for tire brand

Tire size and tire model

Tire age

Tire age

The manufacturer of your BMW recommends that all tires, i.e. including the spare tire, be replaced regardless of the actual wear after 6 years at the latest.

The tire's date of manufacture is indicated on the sidewall:
DOT ... 3603 indicates that the tire was manufactured in week 36 of 2003.

Uniform Tire Quality Grading

Quality grades can be found where applicable on the tire sidewall between tread shoulder and maximum section width. For example:

DOT quality grades

Tread wear

Traction AA A B C

Temperature A B C

All passenger car tires must conform to Federal Safety Requirements in addition to these grades.◀

Tread wear

The tread wear grade is a comparative rating based on the wear rate of the tire when tested under controlled conditions on a specified government test course.

For example, a tire graded 150 would wear one and one-half – 1 ½ – times as well on the government course as a tire graded 100. The relative performance of tires depends upon the actual conditions of their use, however, and may depart significantly from the norm due to variations in driving habits, service practices and differences in road characteristics and climate.

Online Edition for Part No. 01 41 0 157 897 - © 08/03 BMW AG

Traction

The traction grades, from highest to lowest, are AA, A, B, and C.

Those grades represent the tire's ability to stop on wet pavement as measured under controlled conditions on specified government test surfaces of asphalt and concrete. A tire marked C may have poor traction performance.

The traction grade assigned to this tire is based on straight-ahead braking traction tests, and does not include acceleration, cornering, hydroplaning, or peak traction characteristics.◀

Temperature

The temperature grades are A, the highest, B, and C, representing the tire's resistance to the generation of heat and its ability to dissipate heat when tested under controlled conditions on a specified indoor laboratory test wheel.

Sustained high temperature can cause the material of the tire to degenerate and reduce tire life, and excessive temperature can lead to a sudden flat tire. The grade C corresponds to a level of performance which all passenger car tires must meet under the Federal Motor Vehicle Safety Standard No. 109. Grades B and A represent higher levels of performance on the laboratory test wheel than the minimum required by law.

The temperature grade for this tire is established for a tire that is properly inflated and not overloaded. Excessive speed, underinflation, or excessive loading, either separately or in combination, can cause heat buildup and possible a tire failure.◀

M+S

Winter and all-season tires.
These have better winter properties than summer tires.

Online Edition for Part No. 01 41 0 157 897 - © 08/03 BMW AG

Wheel/tire damage

Inspect your wheels and tires frequently for tread wear, signs of damage and for foreign objects lodged in the tread. Check the tread pattern depth.

Due to low-profile tires, please note: wheels, tires and suspension parts are more susceptible to road hazards and consequential damages. Unusual vibrations encountered during normal vehicle operation can indicate tire failure or some other vehicle defect. This can, for example, be caused by driving over curbs. This is also true for irregularities in the vehicle's handling characteristics, such as a pronounced tendency to pull to the left or right. Should this occur, respond by immediately reducing your speed. Carefully proceed – or have your vehicle towed – to the nearest BMW Sports Activity Vehicle center or tire dealer to have the wheels or tires inspected.
Tire damage, extending to sudden and complete loss of pressure in extreme cases, can pose a potentially lethal safety hazard for the vehicle's occupants and other road users alike.◀

Tire tread

The tread depth should not fall below ⅛ in/3 mm.

At tread depths below ⅛ in/3 mm there is an increased risk of high-speed hydroplaning, even when only small amounts of water are present on the road surface.

As winter tires display a noticeable loss in their ability to cope with cold-weather driving conditions once the tread wears to below $^1/_6$ in/4 mm, to ensure continued safety you should always have such tires replaced.

Wear indicators at the tread-groove base, arrow, are distributed over the tire's circumference and are marked on the side of the tire with TWI – Tread Wear Indicator. These indicators signal at a tread depth of $^1/_{16}$ in/1.6 mm that the legally permitted wear limit has been reached.

Online Edition for Part No. 01 41 0 157 897 - © 08/03 BMW AG

Unprofessional attempts by laymen to service tires can lead to damage and accidents.
Have this work performed by skilled professionals only. The technicians at your BMW Sports Activity Vehicle center will be glad to assist you with the required professional knowledge and specialized equipment.◀

The correct wheel and tire combination also affects various systems whose function would otherwise be impaired, e.g. ABS, DSC, xDrive.

Have the wheel and tire assemblies balanced every time either a wheel or a tire is replaced.

BMW does not recommend the use of retread tires, as otherwise driving safety may be reduced. Possible variations in the design and the age – which could be substantial – of the carcasses can lead to unusually rapid wear.◀

The right wheels and tires

BMW recommends that you use only wheel and tire combinations that BMW has tested and approved for your particular vehicle. Variations in factors such as manufacturing tolerances mean that even wheels and tires with identical official size ratings could actually have different dimensions than the approved units – these differences could lead to body contact, and with it the risk of severe accidents. If non-approved wheels and tires are used, BMW cannot evaluate their suitability, and therefore cannot be held liable for driving safety.◀

To maintain good handling and vehicle response, use only tires of a single tread configuration from a single manufacturer. After a flat tire, always remember to have the original wheel and tire combination remounted on the vehicle as soon as possible.

Special features of winter tires

BMW recommends winter tires for use in cold winter driving conditions. Although all-season M+S tires provide better winter traction than summer tires, they generally fail to provide the same levels of cold-weather performance as winter tires.

When switching to winter tires, observe the description under Wheel/tire condition, refer to page 138, and Replacing wheels/tires.

Observing speed ratings:

Never exceed the maximum speed for which the winter tires are rated. Unprofessional attempts by laymen to service tires can lead to damage and accidents. Have this work performed by skilled professionals only. The technicians at your BMW Sports Activity Vehicle center will be glad to assist you with the required professional knowledge and specialized equipment.◀

Storage

Store wheels or tires in a cool, dry place, protecting them against light whenever possible. Always protect tires against all contact with oil, grease and fuels.
Do not exceed the maximum tire inflation pressure indicated on the side wall of the tire.

Snow chains*

Only certain snow chains have been tested by BMW and classified and approved as safe. Consult your BMW Sports Activity Vehicle center for details. BMW recommends only using these approved, narrow-link snow chains. These snow chains are approved exclusively for use in pairs on the rear wheels with the tire sizes 235/65 R 17.

Observe the manufacturer's instructions when installing snow chains. Do not exceed a maximum speed of 30 mph/50 km/h.

▷ When you are driving with snow chains, it can be beneficial to switch off DSC briefly, refer to page 92.◀

Online Edition for Part No. 01 41 0 157 897 - © 08/03 BMW AG

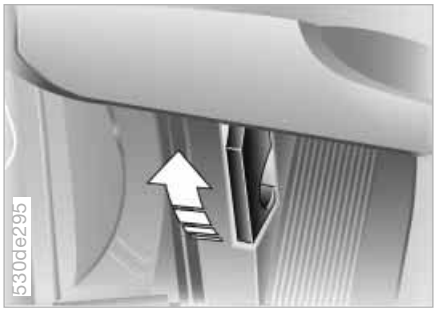

Unlocking

Pull the lever located under the left side of the instrument cluster.

Never attempt to perform any service or repair operations on your vehicle without the required, professional technical training. If you are unfamiliar with the service procedures and precautions, always have any required work carried out at your BMW Sports Activity Vehicle center.
Otherwise, unprofessional attempts at service and repair, and the incorrect handling of parts and materials that can occur during such attempts, constitute a potential safety hazard, both for the vehicle's occupants and for other road users.◀

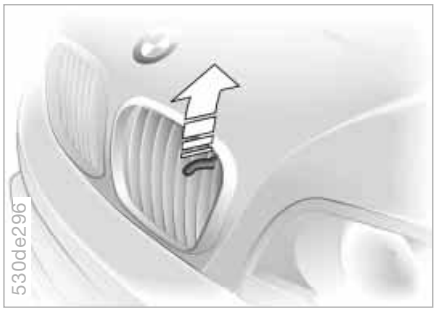

Opening

Pull the release handle and open the hood.

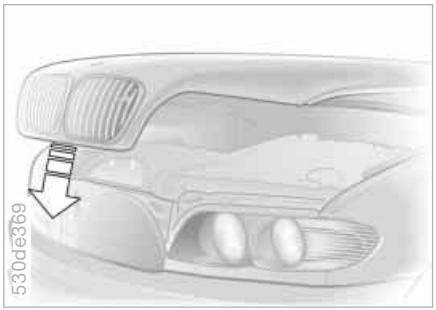

Closing

Allow the hood to fall from a height of about 12 in/30 cm so that it audibly engages.

Observe the same precautions that apply to all closing operations by ensuring that the hood's travel range is clear and unobstructed before allowing the hood to fall into position.
If it is determined that the hood is not completely closed while driving, stop immediately and close it securely.◀

Online Edition for Part No. 01 41 0 157 897 - © 08/03 BMW AG

Engine compartment essentials

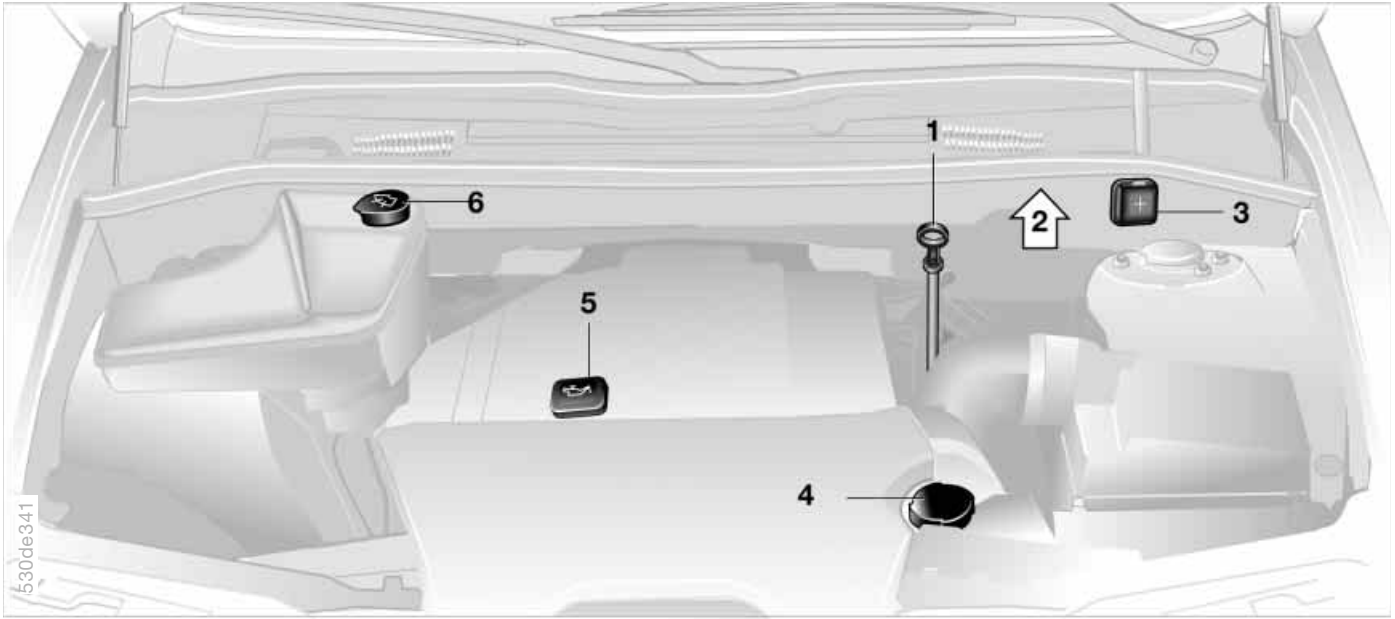

1 Engine oil dipstick 143

2 Brake fluid reservoir – located beneath the microfilter cover 146

3 Auxiliary terminal for jump-starting 165

4 Coolant expansion tank 145

5 Engine oil filler neck 143

6 Reservoir for windshield and headlamp washer system 143

Online Edition for Part No. 01 41 0 157 897 - © 08/03 BMW AG

Washer fluid

530de298

Windshield and headlamp washer system

Approximate capacity is 8.2 US quarts/ 7.8 liters.

Fill with water and – if required – with the addition of a washer antifreeze, according to manufacturer's recommendations.

▷ We recommend that you mix the washer fluid before adding it to the reservoir.◀

⚠ Antifreeze agent for the washer systems is inflammable. For this reason, keep it away from sources of flame and store it only in its original containers. Store it so that it is inaccessible to children. Comply with the instructions on the containers.◀

Engine oil

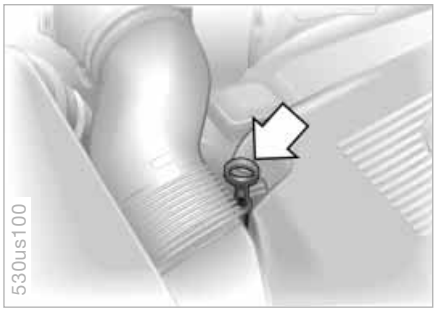

530us100

Checking the oil level

1. Park the vehicle on a level surface
2. Switch the engine off after it has reached normal operating temperature
3. After approx. 5 minutes, pull the dipstick out and wipe it off with a clean lint-free cloth, paper towel, or similar material
4. Push the dipstick carefully all the way into the guide tube and pull it out again
5. The oil level should be in between the two marks on the dipstick.

As with fuel economy, oil consumption is directly influenced by your driving style and vehicle operating conditions.

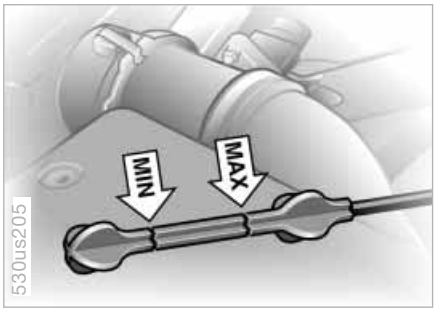

530us205

The oil volume between the two marks on the dipstick corresponds to approx. 1.1 US quarts/1 liter. Do not fill beyond the upper mark on the dipstick. Excess oil will damage the engine.

Online Edition for Part No. 01 41 0 157 897 - © 08/03 BMW AG

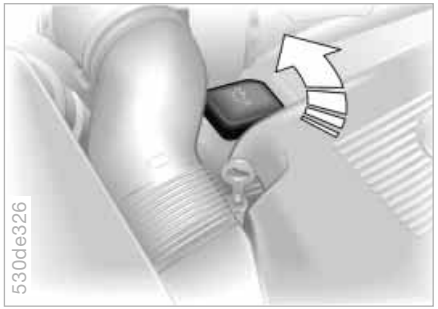

Adding engine oil

Wait until the level has dropped to just above the lower mark before adding oil.

BMW engines are designed to operate without additives, and their use could even lead to damage in some cases. This is also true for the manual transmission, the automatic transmission, the differential, and the power steering system.◀

Recommendation: have the oil changed by your BMW Sports Activity Vehicle center.

Continuous exposure to used oil has caused cancer in laboratory testing. For this reason, any skin areas that come into contact with oil should be thoroughly washed with soap and water.
Always store oils, grease and similar materials so that they are inaccessible to children. Comply with warning labels and information on containers.◀

Comply with the applicable environmental laws regulating the disposal of used oil.◀

Specified engine oils

The quality of the engine oil selected has critical significance for the operation and service life of an engine. Based on extensive testing, BMW has approved only certain engine oils.

Use only approved BMW High Performance Synthetic Oil.

If you are unable to obtain BMW High Performance Synthetic Oil, you can add small amounts of synthetic oil in between oil changes. Use only oils with the API SH specification or higher.

Ask your BMW Sports Activity Vehicle center for details concerning the specific BMW High Performance Synthetic Oil or synthetic oils which have been approved.◀

You can also call BMW of North America at 1-800-831-1117 or visit this website: www.bmwusa.com to obtain this information.

Viscosity ratings

Viscosity is the oil flow rating as established in SAE classes.

The selection of the correct SAE class depends on the climatic conditions in the area where you typically drive your BMW.

Approved oils are in SAE classes 5W-40 and 5W-30.◀

These oils may be used for driving in all ambient temperatures.

Online Edition for Part No. 01 41 0 157 897 - © 08/03 BMW AG

Do not add coolant to the cooling system when the engine is hot. Escaping coolant can cause burns.
To avoid the possibility of damage later on, never use anything other than factory-approved, nitrite and amino-free extended-duty antifreeze with corrosion inhibitor. Your BMW Sports Activity Vehicle center is familiar with the factory specifications.
Antifreeze and anticorrosion agents are hazardous to health. You should always store them in their original containers and in a location which is inaccessible to children. Extended-duty antifreeze with corrosion inhibitor contains the flammable substance ethylene-glycol. For this reason, do not spill antifreeze with corrosion inhibitor on hot engine parts. It could ignite and cause serious burns.◀

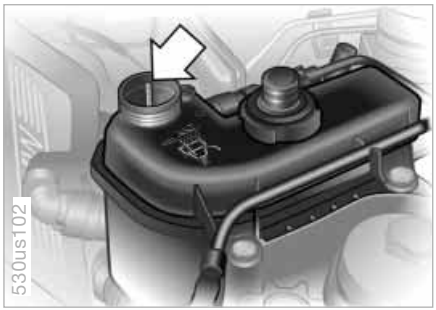

Checking coolant level and adding coolant

Correct coolant level when the engine is cold approx. +68 °F/+20 °C:

1. Start by turning the cap of the expansion tank counter-clockwise. Pause to allow any accumulated pressure to escape, then open
2. The coolant level is correct when the end of the red float is aligned with the upper edge of the filler opening, refer to the arrow in the illustration, or max. 0.8 in/2 cm higher, i. e. up to the mark on the float, refer also to the schematic diagram, next to the cap
3. If necessary, add coolant. Slowly add coolant until the correct level is reached – do not overfill.

Comply with the applicable environmental laws regulating the disposal of extended-duty antifreeze with corrosion inhibitor.◀

Brake fluid

Brake fluid level

If the warning lamp for the brake hydraulic system appears or if the CHECK BRAKE FLUID warning appears in the Check Control: the brake fluid level is too low.

Add brake fluid

The brake fluid reservoir is located under the microfilter housing trim panel on the driver's side of the vehicle. For adding brake fluid or for determining and correcting the cause of brake fluid loss, consult your BMW Sports Activity Vehicle center. Your BMW Sports Activity Vehicle center is familiar with the specifications for factory-approved brake fluids – DOT 4.

Brake fluid loss may result in extended brake pedal travel. For this situation, refer to the notes on page 132.

Brake fluid is hygroscopic, that is, it absorbs moisture from the air over time.
In order to ensure the safety and reliability of the brake system, have the brake fluid changed every two years by a BMW Sports Activity Vehicle center. Refer also to the Service and Warranty Information Booklet for US models or the Warranty and Service Guide Booklet for Canadian models.
Brake fluid is toxic and also damages vehicle paintwork. Always store these agents in tightly-closed original containers kept well away from the reach of children.
Do not spill the fluid and do not refill the brake fluid reservoir to beyond the MAX mark. The brake fluid could ignite upon contact with hot engine parts and cause serious burns.◀

Always observe all applicable environmental rules and regulations when disposing of used brake fluid.◀

Online Edition for Part No. 01 41 0 157 897 - © 08/03 BMW AG

The BMW Maintenance System has been designed as a reliable means of providing maximum driving and operating safety – and as cost-effectively as possible for you.

Please keep in mind that regular maintenance is not only necessary for the safety of your vehicle, but also plays a significant role in maintaining the resale value of the vehicle.

Service Interval Display

Conventional systems rely solely on distance traveled to determine when service is due. The BMW Maintenance System, on the other hand, began many years ago to take the actual conditions under which the vehicle is driven into consideration. After all, different drivers can accumulate mileage in very different ways:
From the point of view of maintenance, 62,000 miles/100,000 km accumulated in short-distance urban driving are not the equivalent of the same distance covered at moderate speeds in long-distance highway travel.

The BMW Maintenance System includes the Engine Oil Service and Inspections I and II.

Determining the maintenance intervals according to the actual loads on the vehicle covers every kind of operating situation. However, even those who drive only short distances – significantly less than 6,000 miles/10,000 km annually – should have the engine oil changed at least every 2 years since oil deteriorates over time, regardless of use.

Service and Warranty Information Booklet – US models/Warranty and Service Guide Booklet – Canadian models

For additional information on maintenance intervals and procedures, please refer to the Service and Warranty Information Booklet for US models or the Warranty and Service Guide Booklet for Canadian models.

As a precaution against corrosion, it is advisable to have the body checked for damage from rocks or gravel at the same time, depending upon operating conditions.

▷ Have your BMW Sports Activity Vehicle center do the maintenance and repair.
Be sure that all maintenance work is confirmed in the Service and Warranty Information Booklet for US models or the Warranty and Service Guide Booklet for Canadian models.
These entries will constitute your proof that the vehicle has received regular maintenance. They are also required for warranty claims.◀

Car care

For all information on this subject, refer to the Caring for your vehicle manual.

Online Edition for Part No. 01 41 0 157 897 - © 08/03 BMW AG

California Proposition 65 Warning

California laws require us to state the following warning:

Engine exhaust and a wide variety of automobile components and parts, including components found in the interior furnishings in a vehicle, contain or emit chemicals known to the State of California to cause cancer and birth defects and reproductive harm.
In addition, certain fluids contained in vehicles and certain products of component wear contain or emit chemicals known to the State of California to cause cancer and birth defects or other reproductive harm. Battery posts, terminals and related accessories contain lead and lead compounds. Wash your hands after handling.
Used engine oil contains chemicals that have caused cancer in laboratory animals. Always protect your skin by washing thoroughly with soap and water.◀

OBD interface socket

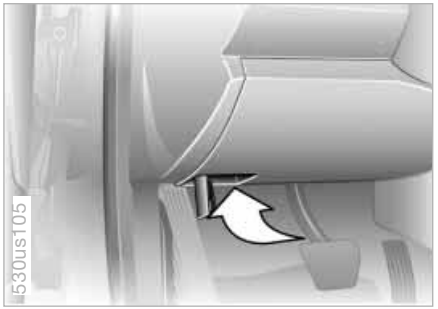

The interface socket for the Onboard Diagnostic is located on the left of the driver's side at the bottom of the instrument cluster and under a cover. The cover has the letters OBD on it.

The purpose of the OBD system is to ensure proper operation of the emission control system for the vehicle's lifetime. The system monitors emission-related components and systems for deterioration and malfunction.

Online Edition for Part No. 01 41 0 157 897 - © 08/03 BMW AG

OBD interface socket

SERVICE ENGINE SOON An illuminated lamp informs you of the need for service, not of the need to stop the vehicle. However, the systems should be checked by your BMW Sports Activity Vehicle center at the earliest possible opportunity.

Indicator lamp for Canada models.

Under certain conditions, the indicator will blink or flash. This indicates a rather severe level of engine misfire. When this occurs, you should reduce speed and consult the nearest BMW Sports Activity Vehicle center as soon as possible. Severe engine misfire over only a short period of time can seriously damage emission control components, especially the catalytic converter.

▷ When the filler cap is not properly tightened, the OBD system can detect the vapor leak and the indicator will light up. If the filler cap is subsequently tightened, the indicator should go out within a few days.◀

Online Edition for Part No. 01 41 0 157 897 - © 08/03 BMW AG

Overview

Controls and features

Operation, maintenance

Owner service procedures

Technical data

Index

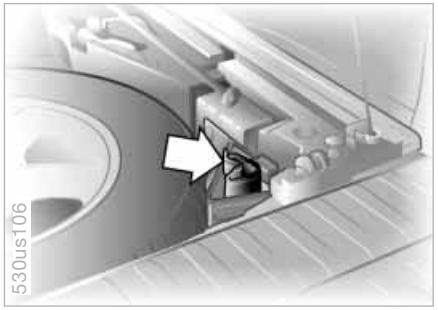

Under the cargo floor cover in a pocket.

Windshield wiper blades

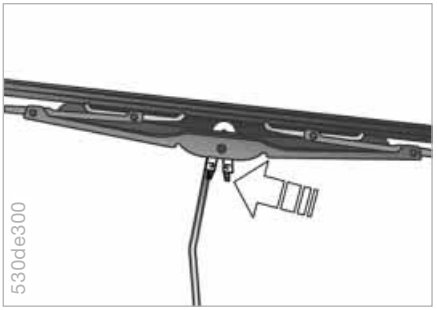

Front

1. Move the wiper to a fold-out position, refer to page 67
2. Lift the wiper arm and press the securing spring, refer to arrow
3. Pull the wiper blade off toward the wiper arm
4. Insert the new blade and snap it into place.

Fold the wipers back down onto the windshield before you turn the ignition key to position 1 or 2 again. If you do not, they could be damaged.◀

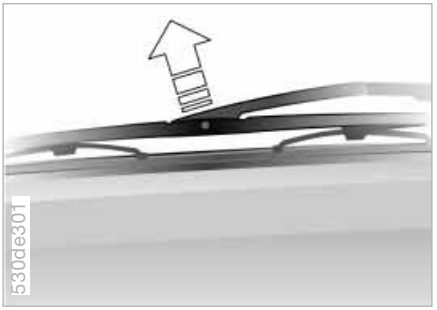

Rear

1. Hold the wiper blade on the window and remove/unclip the wiper arm at the articulated joint, refer to arrow
2. Insert a new wiper blade and press it on/clip it into the wiper arm.

Use only wiper blades approved by BMW.◀

The lamps and bulbs make essential contributions to the safety of your vehicle. For this reason, follow the instructions below carefully when replacing a bulb. If you are not familiar with any of the procedures, consult your BMW Sports Activity Vehicle center.

Never touch the glass on new bulbs with your bare fingers, as even minute amounts of contamination will burn into the bulb's surface and reduce its service life. Use a clean cloth, paper napkin, or a similar material, or hold the bulb by its metallic base.◀

A replacement bulb set is available from your BMW Sports Activity Vehicle center.

To prevent short circuits, before working on any electrical system, equipment or accessory you should always switch it off and disconnect the cable from the battery's negative terminal before starting.
To avoid possible injury or equipment damage when changing bulbs, observe any instructions provided by the bulb manufacturer.◀

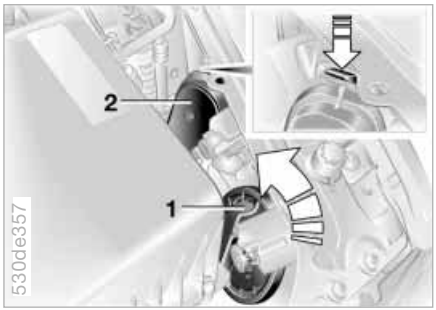

Releasing the lamp cover

The illustration shows the right-hand side of the engine compartment.

1 Halogen low beams
Turn cover cap to left, refer to arrow

2 High beams and parking lamps
Press tab downward, refer to arrow

For checking and adjusting headlamp aim, please contact your BMW Sports Activity Vehicle center.◀

1 Halogen low beams

H7 bulb, 55 watts

The bulb is pressurized. Therefore, wear safety glasses and protective gloves. Failure to comply with this precaution could lead to injury if the bulb is accidentally damaged during replacement.◀

1. Remove the cover
2. Turn the bulb holder to the left and remove
3. Pull bulb out of bulb holder by base and replace.

Online Edition for Part No. 01 41 0 157 897 - © 08/03 BMW AG

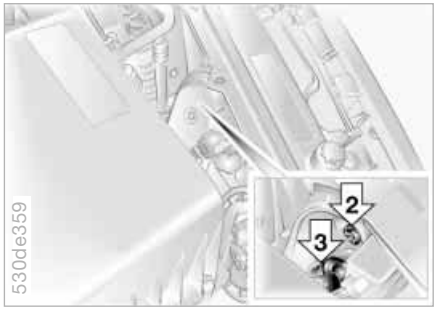

2 Halogen high beams

H1 bulb, 55 watts

The bulb is pressurized. Therefore, wear safety glasses and protective gloves. Failure to comply with this precaution could lead to injury if the bulb is accidentally damaged during replacement.◀

1. Remove the cover
2. Disconnect the plug
3. Unhook wire spring
4. Remove and replace the bulb.

3 Parking and standing lamps

10 watt bulb: H 10 W

1. Remove the cover
2. Disconnect the plug
3. Turn reflector module with bulb to left and remove
4. Replace module with bulb.

Xenon lamps*

The operating life of these lamp units is extremely long and the likelihood of failure very low, provided that they are not switched on and off a very great number of times. If one of these bulbs should nevertheless fail, it is possible to continue driving with great caution using the fog lamps, provided traffic laws in your area do not prohibit this.

To avoid risk of potentially fatal injuries: owing to the extremely high voltages at which these units operate, service work should always be entrusted to qualified personnel.◀

Front turn signal indicators/ side-marker lamps

S 8 bulb

Please contact your BMW Sports Activity Vehicle center in case of a malfunction.

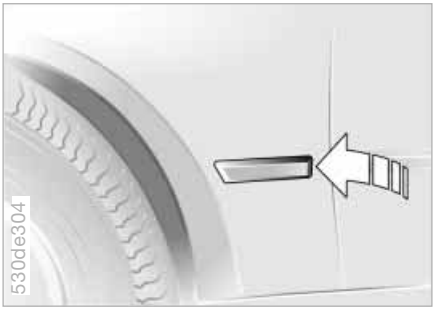

Side turn signal indicators

5 watt bulb: W 5 W or WY 5 W*

1. Use finger pressure against the rear end of the lamp, refer to arrow, to press it forward for removal
2. Apply gentle pressure to the bulb while turning it to the left and pull it out
3. Replace the bulb.

Online Edition for Part No. 01 41 0 157 897 - © 08/03 BMW AG

Front fog lamps

H11 bulb, 55 watts

The bulb is pressurized. Therefore, wear safety glasses and protective gloves. Failure to comply with this precaution could lead to injury if the bulb is accidentally damaged during replacement.◀

1. Pull the cover in front of the fog lamp forward
2. Loosen the two screws, refer to arrows, and remove the fog lamp. When pulling out, overcome initial resistance and turn the headlamp somewhat to the left
3. Pull the cable connector off the bulb
4. Turn the bulb to the left and remove
5. Insert a new bulb in the headlamp and turn as far to the right as possible
6. Connect the plug connector to the bulb, ensuring proper engagement.

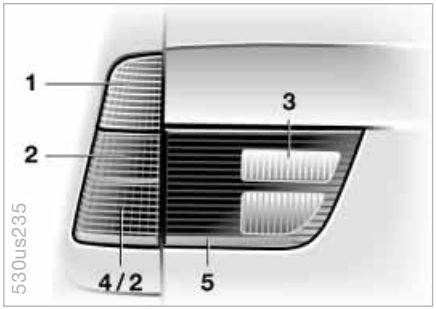

Tail lamps

21 watt bulbs: P 21 W or PY 21 W*, recommendation: BMW special bulbs with neutral coloration

1 Turn signal indicator

2 Rear lamp/ side marker lamp

3 Backup lamps

4 Brake lamp

5 Reflector

Online Edition for Part No. 01 41 0 157 897 - © 08/03 BMW AG

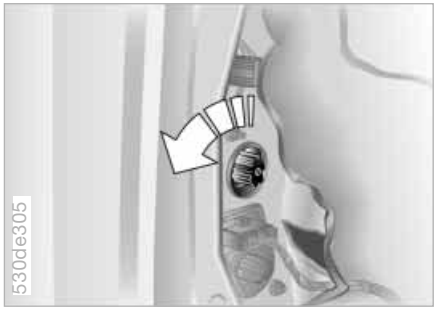

Lamps in the side panel:

1. Open the cover in the side panel
2. Lift the side panel if necessary
3. Apply gentle pressure to the bulb holder while turning it to the left for removal and replacement
4. Remove the bulb.

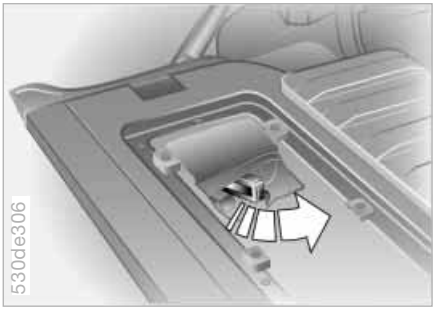

Lamps in the tailgate:

1. Unclip the trim panel in the tailgate with a screwdriver
2. Apply gentle pressure to the bulb holder while turning it to the left for removal and replacement.
3. Remove the bulb.

Center brake lamp

LED strip in the rear spoiler: please contact your BMW Sports Activity Vehicle center in case of a malfunction.

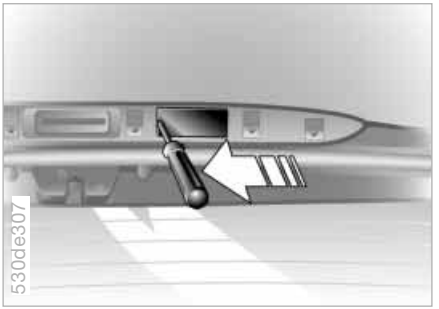

License plate lamps

5 Watt bulb

1. Press the lamp out to the side with a screwdriver
2. Remove the lamp and replace the bulb.

Online Edition for Part No. 01 41 0 157 897 - © 08/03 BMW AG

Safety precautions to observe in the event of a flat and during all tire changes:
Park the vehicle as far as possible from passing traffic. Park on a firm, flat, surface. Switch on the hazard warning flashers.
Turn the steering wheel to the straight-ahead position, remove the key and engage the steering lock. Shift into 1st or reverse, selector lever in Park with automatic transmission, and engage the handbrake.
All passengers should be outside the vehicle and well away from your immediate working area, behind a guardrail, for instance.
If a warning triangle or portable hazard warning lamp is required, set it up on the roadside at an appropriate distance from the rear of the vehicle. Comply with all safety guidelines and regulations.
Change the wheel only on a level, firm surface which is not slippery. The vehicle or the jack could slip to the side if you attempt to raise the vehicle on a soft or slippery surface such as snow, ice, tiles etc.
Position the jack on a firm support surface.
Do not place wooden blocks or similar objects under the jack. If this is done, the jack might not be able to reach its full support capacity because of the limited height. To avoid serious or fatal injury: never lie under the vehicle, and never start the engine while it is supported by the jack.◀

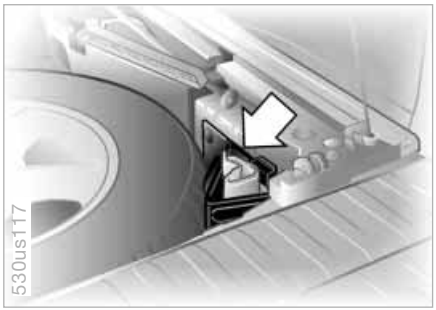

What you will need

In order to avoid rattling noises later, note the position of the tools when you remove them and return them to their original position when you are through using them.

▷ Two wedges – wheel chocks
Open the liftgate and tailgate.
Raise the floor cover or pull-out cargo floor in luggage compartment, refer to pages 121, 122, 123.
Remove the wheel chocks, refer to arrow, next to the spare wheel

Online Edition for Part No. 01 41 0 157 897 - © 08/03 BMW AG

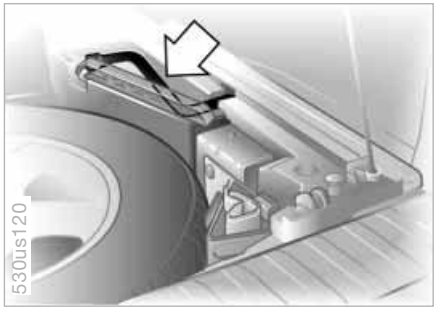

▷ Lug wrench
Located beside the spare tire

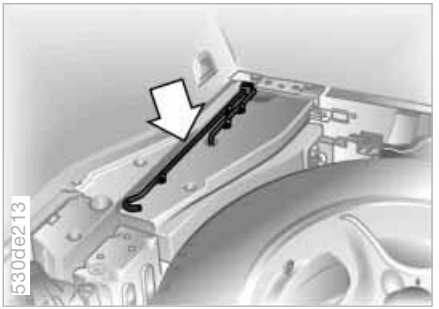

▷ Handle for the jack
Remove from its holder

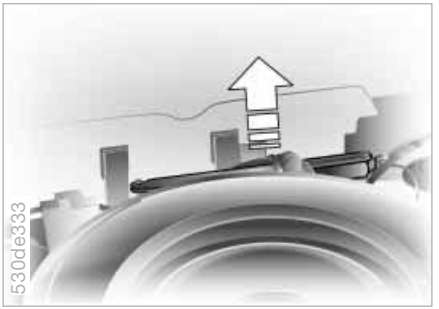

▷ Jack
Remove the rubber band from the holder, refer to arrow, and take out the jack.
When you have completed work, screw the jack all the way back down, remove the handle and insert it into its holder.

Online Edition for Part No. 01 41 0 157 897 - © 08/03 BMW AG

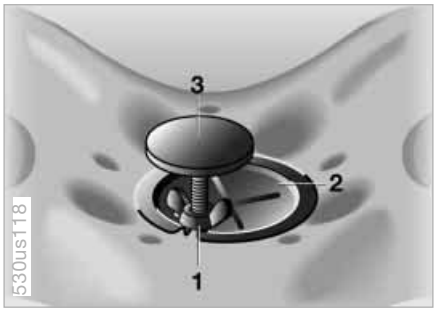

Spare wheel

1. Loosen the wing nut 1
2. Remove the plate 2 to the side
3. Unscrew the threaded rod 3 completely.

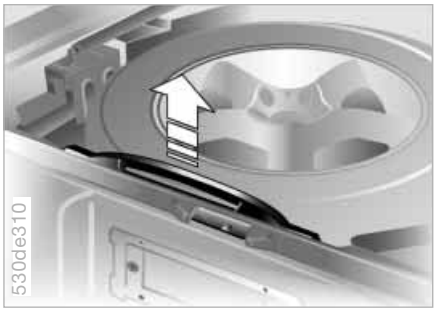

Removal aid for the spare wheel

By using this device, you do not have to lift the spare wheel out of the recess by hand.
Its task is to help you to move the wheel onto the tailgate, from where you can easily lift it off.

1. Close the tailgate again
2. Grasp the handle of the removal aid behind the spare wheel with both hands and pull upward over the tailgate, refer to arrow

3. Hook both buckles into the latch of the tailgate, refer to arrow; the tailgate is released

Online Edition for Part No. 01 41 0 157 897 - © 08/03 BMW AG

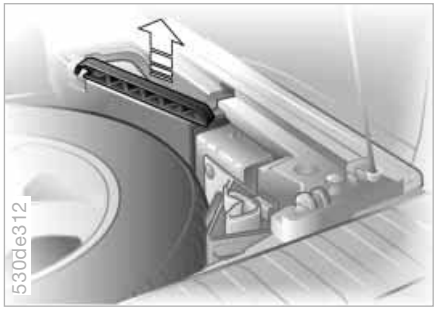

4. Remove the support rod from the bracket

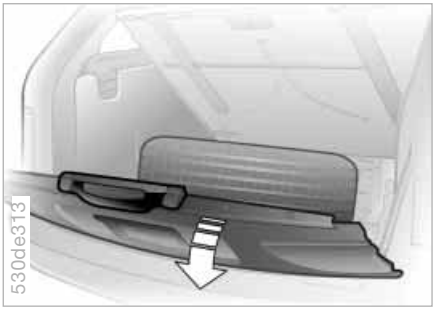

5. Press the tailgate down and hold it there. The spare wheel is now pulled by means of the removal aid onto the tailgate

Hold the tailgate in the opened position and do not allow it to retract sharply upward. If you do so, there is a risk of personal injury and vehicle damage.◀

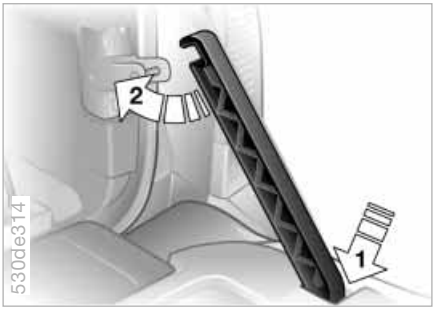

6. Insert the support rod in the tailgate lock and press down until it engages, refer to arrow 1; then lock hook of rod in striker, refer to arrow 2

Be sure that the support rod is locked firmly in place. If you fail to do so, it could retract sharply upward and cause personal injury and vehicle damage.◀

7. You can now release the locked tailgate and take the spare wheel down from the tailgate. It is recommended that you leave the tailgate locked into place until you have completed the wheel change and placed the wheel with the defective tire into the removal aid.

Procedure

1. Read carefully and comply with the safety precautions on page 157
2. Secure the vehicle to prevent it from rolling:
   Place the wedges – chocks – behind the wheels on the side opposite the side you are lifting. If the vehicle is parked on a downward slope, place the wedges securely in front of the wheels. If the wheel must be changed on a surface with a more severe slope, take additional precautions to secure the vehicle from rolling
3. Loosen the lug bolts 1/2-turn
4. Insert the jack handle into the jack, refer to the illustration in the next column

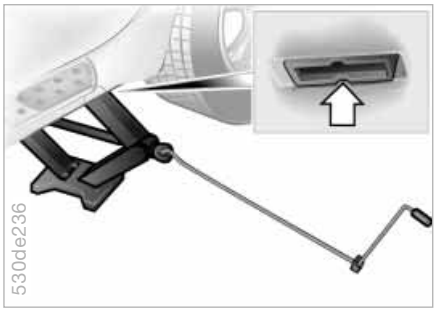

5. Position the jack at the jacking point closest to the flat tire so that the jack base is vertically below the jacking point and the entire surface of the head of the jack will move into the square recess of the jacking point, refer to the illustration detail, when the jack is cranked
6. Jack the vehicle up until the wheel you are changing is raised from the ground
7. Unscrew the lug bolts and remove the wheel
8. Remove accumulations of mud or dirt from the mounting surfaces of the wheel and hub. Clean the lug bolts
9. Position the spare wheel. Secure the wheel by turning at least two lug bolts into opposite bolt holes
10. Screw in the remaining lug bolts. Tighten all the bolts securely in a diagonal pattern
11. Lower the jack and remove it from beneath the vehicle
12. Tighten the lug bolts in a diagonal pattern
13. Check and correct the tire inflation pressure at the earliest opportunity.

Protect valve stems and valves from dirt using screw-on valve stem caps. Dirt in the valve stems frequently leads to slow leaks.

⚠ The vehicle jack is designed for changing wheels only. Do not attempt to raise another vehicle model with it or to raise any load of any kind. To do so could cause accidents and personal injury.
To ensure continued safety, have the tightness of the lug bolts checked with a calibrated lug wrench – torque specification: 101 lb-ft/140 Nm – at the earliest opportunity.◀

Store the wheel and the tools in the order opposite that for removal.

Before removing the support rod, be sure that the tailgate is held down firmly. If you fail to do so, it could retract sharply upward and cause personal injury and vehicle damage.
After you remove the rod, close the tailgate carefully. Continue to hold it firmly until it is completely closed.◀

If light-alloy wheels other than original BMW light-alloy wheels have been mounted, it may be necessary to use different lug bolts for those wheels.

Replace the defective tire as soon as possible and have the new wheel/tire balanced.

Driving with spare wheel

With certain wheel and tire combinations the size of the spare wheel differs from that of the other wheels. The spare wheel is equivalent to these in all speed and load ranges. However, to restore the original state, the normal wheel should be remounted as soon as possible. With the spare tire mounted the maximum speed is 130 mph/ 210 km/h.◀

Battery

Battery posts, terminals and related accessories contain lead and lead compounds. Wash hands after handling.◀

Battery care

The battery is maintenance-free, that is, the original electrolyte will normally last for the service life of the battery under moderate climatic conditions.

For all questions that regard the battery, please consult your BMW Sports Activity Vehicle center.◀

Charging the battery

Only charge the battery in the vehicle via the terminals in the engine compartment with the engine off. For correct connections, refer to Jump-starting on page 165.

Disposal

Return used batteries to a recycling point or your BMW Sports Activity Vehicle center. Maintain the battery in an upright position for transport and storage. Always restrain the battery to prevent it from tipping over during transport.◀

Online Edition for Part No. 01 41 0 157 897 - © 08/03 BMW AG

In the glove compartment

Open the glove compartment and turn the two quick-release fasteners to the left.

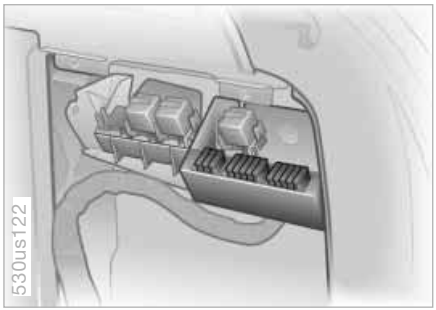

In the cargo area

Open the right cover by pulling the handle.

⚠ Never attempt to repair a blown fuse, and do not replace a defective fuse with a substitute of another color or amperage rating, as this could lead to a circuit overload, ultimately resulting in a fire in the vehicle.◀

Online Edition for Part No. 01 41 0 157 897 - © 08/03 BMW AG

Receiving assistance

The Roadside Assistance of the BMW Group offers you assistance in the event of a breakdown around the clock, also at weekends and on public holidays.

The phone numbers of the Roadside Assistance control center in your home country can be found in the BMW dealer directory.

In the case of vehicles with the corresponding equipment, you can use buttons in the headlining to contact Roadside Assistance or start an emergency call.

When an emergency call is triggered, a telephone connection is set up to the general emergency call center.

In vehicles where BMW Assist is enabled, the phone system will also automatically establish contact with the BMW Assist emergency call center. If the current location of your vehicle can be determined, this is transferred to the BMW Assist emergency call center.

The condition for starting an emergency call or contacting Roadside Assistance:

▷ The car phone is logged on to a mobile telephone network
▷ The emergency call system is operable.

1 Starting an emergency call
2 Establishing contact to Roadside Assistance

Starting an emergency call*

Press button 1 for at least 2 seconds. The indicator lamp in the button lights up. As soon as the voice connection to the general emergency number has been set up, the indicator lamp flashes. If the indicator lamp flashes, but you are unable to hear the emergency call center, you can still be heard by the emergency call center.

⚠ For technical reasons, the emergency call cannot be guaranteed under the most unfavorable conditions.◀

Under certain conditions, an emergency call is triggered automatically immediately after a severe accident. The automatic emergency call is not affected by the button being pressed.

Roadside Assistance*

Press button 2 for at least 2 seconds.

With the BMW Assist activated, the current location of your vehicle will be transmitted in the specific country.

Online Edition for Part No. 01 41 0 157 897 - © 08/03 BMW AG

Jump-starting

When your battery is discharged you can use two jumper cables to start your vehicle with power from the battery in a second vehicle. You can also use the same method to help start another vehicle. Use only jumper cables with fully-insulated clamp handles.

To avoid the risk of potentially fatal injury, always avoid all contact with electrical components while the engine is running. Carefully observe the following instructions to avoid personal injury and/or damage to one or both vehicles.◀

Preparing

1. Check whether the battery of the other vehicle has a voltage of 12 Volts and approximately the same capacitance in Ah. This information can be found on the battery
2. Switch off the engine of the support vehicle
3. Switch off any electrical systems and components in both vehicles.

Ensure that no contact exists between the bodywork on the two vehicles, otherwise there is a danger of short circuits.◀

Connecting the jumper cables

To avoid personal injury from sparks, always observe this sequence when connecting jumper cables.◀

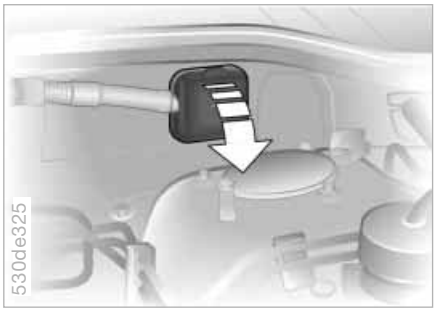

On your BMW, the so-called starting-aid terminal in the engine compartment serves as the battery positive terminal, also refer to engine compartment essentials on page 142. The symbol + is embossed on the cover.

1. Fold up the cap of the BMW auxiliary terminal for jump-starting, refer to arrow
2. Connect one terminal clamp of the positive/+ jumper cable to the positive terminal of the battery or an auxiliary terminal for jump-starting of the vehicle providing starting assistance.
3. Connect the second terminal clamp of the positive/+ jumper cable to the positive terminal of the battery or to an auxiliary terminal for jump-starting of the vehicle to be started

Online Edition for Part No. 01 41 0 157 897 - © 08/03 BMW AG

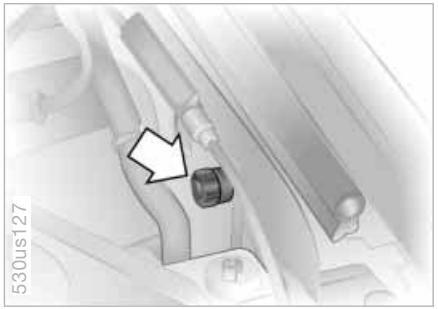

Your BMW is equipped with a special nut on the left side panel as a body ground or negative terminal, refer to arrow in illustration.

4. Attach one end of the negative/– jumper cable to the negative terminal of the battery or to an engine or body ground of the vehicle providing assistance
5. Connect the second terminal clamp of the negative/– jumper cable to the negative terminal of the battery or to the engine or body ground of the vehicle to be started.

Starting the engine

1. Start the engine on the support vehicle and allow it to run for several minutes at a fast idle
2. Start the engine on the other vehicle in the usual way.
   If the first start attempt is not successful, wait a few minutes before another attempt in order to allow the discharged battery to recharge
3. Let the engines run for a few minutes
4. Disconnect the jumper cables by reversing the connection sequence.

Depending on the cause of the fault, have the battery recharged by your BMW Sports Activity Vehicle center.

Never use spray fluids to start the engine.◀

Having vehicle towed

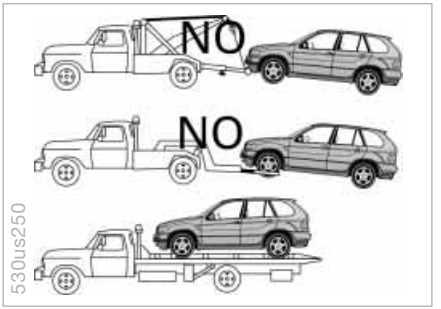

Always observe all applicable towing laws and regulations.
Do not tow the X5 with the axle raised, as otherwise the X5 can break loose from the towing vehicle or the transfer case can be damaged.◀

Towing with a commercial tow truck

▷ Use only a flatbed carrier
▷ Do not tow with sling-type equipment
▷ Do not use a wheel lift.

Never allow passengers to ride in a towed vehicle for any reasons.◀

Online Edition for Part No. 01 41 0 157 897 - © 08/03 BMW AG

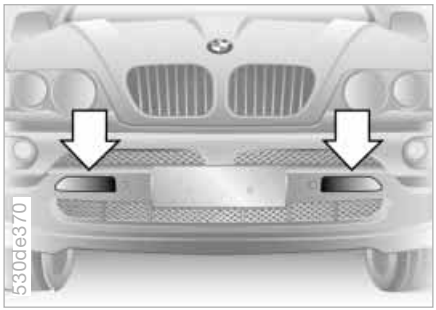

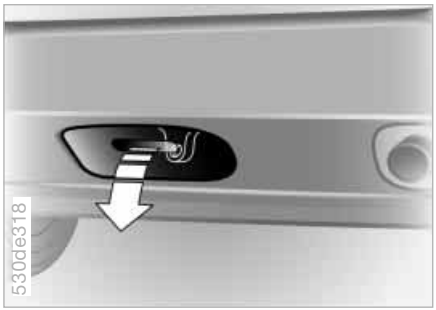

Tow fitting

The screw-in tow fitting is stored beneath the cargo floor cover. Carry it with you at all times. It can be screwed in at the front or rear of the vehicle.

Access to tow sockets

Front:
Use a screwdriver to press the right or left cover out, refer to arrows.

Rear:
Pull the cover off.

Only use the tow fitting that comes with the vehicle and screw it in as far as it will go. Only use the tow fitting to tow on the roadway. Follow these instructions; otherwise the tow fitting can come loose and lead to damage to the vehicle.
Never attempt to tow or tie down the vehicle using suspension components, as this could lead to damage that might ultimately result in an accident.◀

Online Edition for Part No. 01 41 0 157 897 - © 08/03 BMW AG

Online Edition for Part No. 01 41 0 157 897 - © 08/03 BMW AG

Overview

Controls and features

Operation, maintenance

Owner service procedures

Technical data

Index

Engine specifications

		X5 3.0i	X5 4.4i
Displacement Number of cylinders	cu in/cm³	181.8/2,979 6	268.4/4,398 8
Maximum output at engine speed	hp rpm	225 5,900	315 5,400
Maximum torque at engine speed	lb-ft/Nm rpm	214/290 3,500	324/440 3,600
Compression ratio		10.2	10.0
Stroke Bore	in/mm in/mm	3.53/89.6 3.31/84.0	3.26/82.7 3.62/92.0
Fuel-injection system		Digital electronic engine-management system	

An engine performance test is authorized only on an appropriate chassis dynamometer.

Online Edition for Part No. 01 41 0 157 897 - © 08/03 BMW AG

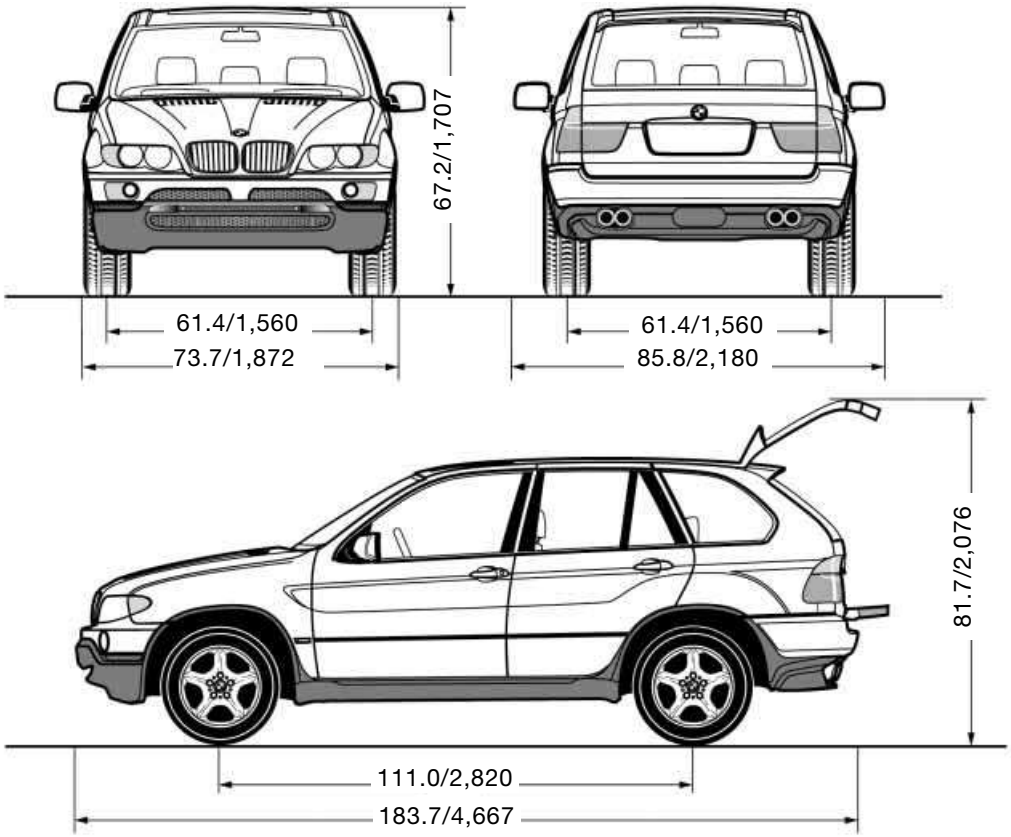

530de368

All dimensions are given in inches/mm. Height: with level control system: 67.2/1,707; without level control system: 67.5/1,715. Height with roof-mounted luggage rack: with level control system: 68.5/1,740; without level control system: 68.8/1,748. Track width: X5 3.0i: 62.0/1,576. Min. turning circle dia.: 39.7 ft/12.1 meters.

Online Edition for Part No. 01 41 0 157 897 - © 08/03 BMW AG

Weights

		X5 3.0i	X5 4.4i
Curb weight			
with manual transmission	lbs/kg	4,652/2,110	–
with automatic transmission	lbs/kg	4,696/2,130	4,927/2,235
Approved gross vehicle weight			
with manual transmission	lbs/kg	6,008/2,725	–
with automatic transmission	lbs/kg	6,008/2,725	6,008/2,725
Load			
with manual transmission	lbs/kg	1,356/615	–
with automatic transmission	lbs/kg	1,312/595	1,080/490
Approved front axle load	lbs/kg	2,712/1,230	2,789/1,265
Approved rear axle load	lbs/kg	3,307/1,500	3,307/1,500
Approved roof load capacity	lbs/kg	220/100	
Never exceed either the approved axle loads or the gross vehicle weight.			
Cargo area capacity	cu ft/l	16.4 – 54.4/465 – 1,540 – according to DIN 69.04/1,955 – according to SAE	

Online Edition for Part No. 01 41 0 157 897 - © 08/03 BMW AG

			Notes
Fuel tank Reserve	gal./liters	approx. 24.6/approx. 93 approx. 2.0/approx. 8 – X5 3.0i approx. 2.5/approx. 10 – X5 4.4i	Fuel specification: page 25
Windshield washer system with headlamp washer system	quarts/liters	approx. 8.2/approx. 7.8	For details: page 143
Cooling system including heater circuit	quarts/liters	11.6/11.0 – X5 3.0i 15.2/14.4 – X5 4.4i	For details: page 145
Engine oil and filter change	quarts/liters	8.0/7.5 – X5 3.0i 8.5/8.0 – X5 4.4i	BMW High Performance Synthetic Oil. For details: page 144
Manual and automatic transmission, transfer box and differential	–	–	Lifetime fluid, no fluid change required

Online Edition for Part No. 01 41 0 157 897 - © 08/03 BMW AG

Online Edition for Part No. 01 41 0 157 897 - © 08/03 BMW AG

Overview

Controls and features

Operation, maintenance

Owner service procedures

Technical data

Index

Everything from A to Z

A

A/C operation
air conditioner 101
automatic climate control 106
Ability to climb, refer to Driving on bad roads 131
ABS Antilock Brake System 90
indicator lamp 20
Accessories 9
Accident
refer to Emergency call 164
refer to Mobile Service 164
Activated-charcoal filter 108
Adding brake fluid 146
Adjusting cooling capacity of rear climate control 108
Adjusting seats
electric comfort seat 45
mechanical seat 44
mechanical sports seat 44
power seat 45
Air circulation, refer to Recirculated-air mode 101
Air conditioner 100
Air distribution
air conditioner 101
automatic climate control 105
individual 105
Air outlets, refer to Ventilation 102, 107
Air pressure, refer to Tire inflation pressure 134
Air recirculation, refer to AUC Automatic recirculated-air control 106
Air supply
air conditioner 101
automatic climate control 105
rear climate control 107
Air vents, refer to Ventilation 100, 103
Air, drying, refer to A/C operation 101, 106
Airbags 54
indicator lamp 20
sitting safely 42
Airing, refer to Ventilation 102, 107
Alarm system 37
avoiding unintentional alarms 38
All-season tires, refer to Special features of winter tires 139
Antenna, refer to the Caring for your vehicle brochure
Antifreeze
coolant 145
washer fluid 143
Anti-freeze protection
coolant 145
Anti-theft system 29
refer also to Alarm system 37
Anti-trapping mechanism
glass roof, electric 41
power windows 39
Armrest 114
storage compartments 114
Artificial leather, refer to the Caring for your vehicle brochure
Artificial wood trim, refer to the Caring for your vehicle brochure
Ashtray
front 115
rear 116
AUC Automatic recirculated-air control 106
AUTO program, refer to Automatic air distribution and air flow 105
Automatic
air distribution 105
air supply 105
car wash, refer to the Caring for your vehicle brochure
climate control 103
cruise control 70
curb monitor 50
headlamp control 97
rear window cleaning 69
steering wheel adjustment 51
Automatic recirculated-air control AUC 106
Automatic speed reduction for descents, refer to HDC Hill Descent Control 93

Automatic transmission with Steptronic 64
ignition 61
indicator lamp 19, 20
interlock 61
selector lever interlock 65
shiftlock 65
Average
consumption 79, 86
speed 79, 87
Avoiding alarms 38
Avoiding fire damage 132
Axle loads, refer to Weights 172

B

Backrests, refer to Adjusting seats 44, 45
Backup lamps 64
replacing bulbs 155
Battery 162
disposal 162
indicator lamp 18
jump-starting 165
remote control 29
Belts, refer to Safety belts 48
Beverage holder 114
Black ice, refer to Ice warning 72
Blower
air conditioner 101
automatic climate control 105
BMW High Performance Synthetic Oil 144
BMW Maintenance System 147
Bore, refer to Engine specifications 170
Bottle holder, refer to Beverage holder 114
Brake disks
brake system 132
break-in procedure 130
Brake fluid 146
indicator/warning lamp 18
level 146
replacing 146
Brake force display 96
Brake hydraulic system 132
indicator/warning lamp 18, 19
Brake lamps
replacing bulbs 155
Brake pads 133
break-in procedure 130
indicator lamp 18, 20
Brake system 132
brake pads 133
brake-fluid level 132
break-in procedure 130
disc brakes 133
Brake wear warning
brake pads 133
indicator lamp 18, 20
Brakes 132, 133
ABS 90
brake fluid 146
break-in procedure 130
handbrake 63
indicator/warning lamp 18, 19
Break-in procedure 130
differential 130
engine 130
Bulbs and lamps 153
Buttons on steering wheel 22

C

California Proposition 65 Warning 148
Can holder, refer to Beverage holder 114
Capacities 173
Car care, refer to the Caring for your vehicle brochure
Car keys, refer to Keys 28
Car radio, refer to separate Owner's Manuals
Car wash, refer to the Caring for your vehicle brochure
Car-care products, refer to the Caring for your vehicle brochure
Care, refer to the Caring for your vehicle brochure
Cargo area 118
capacity 172
floor cover 121
increasing volume 118
lamps 99
liftgate 34
liftgate, manual operation 34
manual operation 36
opening from the inside 34
opening from the outside 34
opening, remote control 30
opening/closing, refer to Tailgate 35
roll-up cover 119
tailgate 35
volume 172
volume, refer to Weights 172

Everything from A to Z

Cargo floor, pull-out 122
Cargo-area partition net 119
Caring for leather, refer to the Caring for your vehicle brochure
Caring for the carpet, refer to the Caring for your vehicle brochure
Cassette operation, refer to Owner's Manual for Radio/ Onboard Computer
Catalytic converter, refer to Avoiding fire damage 132
CD changer, refer to Owner's Manual for Radio/ Onboard Computer
CD operation, refer to Owner's Manual for Radio/ Onboard Computer
Center armrest, refer to Storage compartments 114
Center brake lamp replacing bulb 156
Central key with remote control 28
Central locking system 28
Changes, technical, refer to For your own safety 8
Changing a wheel 136, 157
spare tire 159
Charge-current indicator light 18
CHECK button 76
Check Control 76
Child's seats, refer to Child-restraint systems 56
Child-restraint systems 56
Child-safety locks 59
Chocks 157
Chrome parts, care, refer to the Caring for your vehicle brochure
Cigarette lighter 115, 116
Circulation of air, refer to Recirculated-air mode 101, 106
Cleaning the rear window 69
Cleaning windows 68
washer reservoir 143
Cleaning, vehicle, refer to the Caring for your vehicle brochure
Climate control in the rear passenger area 107
Clock 81
12 or 24-hour mode 81
setting 81
setting time and date 81
setting, refer also to Owner's Manual for Radio/ Onboard Computer
Closing
from inside 33
from outside 29, 32
Cockpit 14
Code
activating 87
deactivating 88
selecting 87
Cold start, refer to Starting the engine 62
Combination instrument, refer to Instrument cluster 15, 17
Combination of wheels/ tires 139
Comfort seat 45
Comfort starting, refer to Starting the engine 62
Compact Disc operation, refer to Owner's Manual for Radio/Onboard Computer
Compartments, refer to Storage compartments 114
Compression ratio, refer to Engine specifications 170
Computer 79, 84
also refer to Owner's Manual for Onboard Computer
Condensation, refer to A/C operation 101, 106
Connecting a vacuum cleaner, refer to Lighter socket 115
Consumption, refer to Fuel consumption 86
Contents 4
Controls, refer to Cockpit 14
Convenience operation 32
glass roof 32
windows 32
Coolant 145
level 145
temperature gauge 74
warning lamp 74

Cooling
maximum 106
refer to A/C
operation 101, 106
refer to
Temperature 101, 105
Cooling system, refer to
Capacities 173
Copyright 4
Correct tires and
wheels 139
Courtesy lighting 99
Cruise control 70
buttons on steering
wheel 22
indicator lamp 21
Cruising range 79, 86
Cup holder, refer to
Beverage holder 114
Curb weight, refer to
Weights 172
Current consumption, refer
to Energy Control 73
Cylinders, refer to Engine
data 170

D
Data, technical 170
dimensions 171
engine 170
filling capacities 173
weights 172
Date
also refer to Owner's
Manual for Onboard
Computer
calling up 81
changing 81
Daytime driving lamps 97
Deactivating the alarm in an
emergency 88
Defective lamp 153
Defrosting windows and
removing condensation
air conditioner 102
automatic climate
control 105
Digital clock 81
also refer to Owner's
Manual for Onboard
Computer
Dimensions 171
Dipstick, engine oil 143
Directional indicators, refer
to Turn signal
indicators 67
Disc brakes 133
Displacement, refer to
Engine specifications 170
Display lighting, refer to
Instrument lighting 98
Displays, refer to Instrument
cluster 15, 17
Disposal
antifreeze with corrosion
inhibitor 145
used oil 144
vehicle battery 162
Distance to destination 85
Distance warning 89
Divided rear seat backrest,
refer to Folding rear seat
back 118
Door keys 28
Door lock 32
DOT Quality Grades 136
Draft-free
ventilation 102, 107
Driving lamps, refer to
Parking lamps/low
beams 97
Driving notes
break-in procedures 130
driving hints 131, 132
Driving on bad roads 131
Driving stability control 91
Driving your X5 131
Dry air, refer to A/C
operation 101, 106
DSC Dynamic Stability
Control 91
indicator lamp 21

E
Electric glass roof 40
Electric power windows 38
Electrical malfunction
doors 32
fuel filler door 23
glass roof 41
liftgate 34
tailgate 36
Electronic Stability Program
ESP, refer to DSC Dynamic
Stability Control 91
Electronic transmission
control module 66
Emergency call 164
Emergency operation, refer
to Manual operation 23
Energy control 73
Energy-conscious driving,
refer to Energy control 73
Engine
break-in procedure 130
data 170
electronic circuitry 21
starting 61

Everything from A to Z

Engine compartment essentials 142
Engine coolant 145
Engine hood 141
Engine oil 143
adding 144
filling capacity 173
indicator/warning lamp 18
prescribed oils 144
Engine oil level indicator/warning lamp 20
Engine oil pressure indicator/warning lamp 18
Engine output, refer to Engine specifications 170
Engine specifications 170
Engine speed 73
refer also to Engine specifications 170
Environmentally friendly driving, refer to Energy Control 73
ESP Electronic Stability Program, refer to DSC Dynamic Stability Control 91
Exhaust system, refer to High temperatures 132
Extended immobilizer function 87
Exterior mirrors 52
automatic dimming feature 53

F

Failure messages, refer to Check Control 76
Failure of a current consumer 163
False alarms, refer to Avoiding unintentional alarms 38
Fan, refer to Air supply 101, 105
Fasten safety belts warning lamp 20, 48
Fault displays, refer to Check Control 76
Filter
refer to Microfilter 102
refer to Microfilter/ activated-charcoal filter 108
First-aid kit 23
Flashlight 113
Flat tire 157
refer also to Tire inflation pressure 134
spare wheel 159
Flooding, refer to Water on roads 131
Floor mats, refer to the Caring for your vehicle brochure
Fog lamps 98
indicator lamp 21
Folding rear seat back 118
Folding rear seat backrest 118
Folding the floor cover up 122
Footbrake, refer to Driving notes 132
Footwell lamps 99
Front airbags 54
Front fog lamps replacing bulbs 155
Fuel clock, refer to Fuel gauge 74
Fuel consumption 79, 86
Fuel display, refer to Fuel gauge 74
Fuel filler door 23
manual operation 23
Fuel gauge 74
Fuel quality 25
Fuel tank capacity, refer to Capacities 173
Fuel-saving driving, refer to Energy control 73
Fuses 163

G

Gasoline display, refer to Fuel gauge 74
Gasoline, refer to Fuel quality 25
Gear changes, refer to Automatic transmission with Steptronic 65
Gear display 64
Gearshift lever
Automatic transmission with Steptronic 64
manual transmission 63
General driving notes 132
Glass roof, electric 40
convenience operation 32
manual operation 41
power failure 41
remote control 30
Glasses compartment 115
Glove compartment 113
Gross weight, refer to Weights 172
Ground clearance 131

H

Hand lamp, refer to Rechargeable flashlight 113
Handbrake 63
indicator lamp 18, 20

Hands-free microphone, refer to Portable phone 113
Hands-free system 113
Having vehicle towed 166
Hazard warning flashers 14
HDC Hill Descent Control 93
Head airbags 54
Head restraints 46
Headlamp control, automatic 97
Headlamp flasher 67
  indicator lamp 21
Headlamp washer system
  capacity 173
  cleaning headlamps 68
  reservoir 143
  washer fluid 143
Headlamps
  bulb replacement 153
  care, refer to the Caring for your vehicle brochure
Heated mirrors 52
Heated rear window
  air conditioner 101
  automatic climate control 106
Heated seats 50
Heated steering wheel 52
Heater
  exterior mirrors 52
  rear window 101, 106
  seats 50
  steering wheel 52
Heating and ventilation 100, 103
Heating while stopped 107
Heavy cargo 125
Height adjustment
  seats 44, 45
  steering wheel 51
Height, refer to Dimensions 171
High beams 98
  bulb replacement 154
  headlight flasher 67
  indicator lamp 21
Hills 131, 133
Holder for beverage cans 114
Horn 14
Hydroplaning 132, 138

I

Ice warning 72
Identification, tire 136
Ignition 61
Ignition key 28
Ignition lock 61
Immobilizer function 87
Imprint 4
Independent ventilation 109
  also refer to Owner's Manual for Onboard Computer or separate Owner's Manual
  entering switch-on times 83
  switching on and off 83
Indicating elements 15, 17
Indicator and warning lamps
  airbags 56
  alarm system 37
  coolant temperature 74
  DSC 91
  engine temperature 74
  fasten safety belts 48
  fog lamps 98
  overview 18
  reserve 74
  self-leveling suspension 94
Individual air distribution 105
Individual settings, refer to Vehicle Memory, Key Memory 60
Inflation pressure, tires 134
INSPECTION 75
Instrument cluster 15, 17
Instrument illumination, refer to Instrument lighting 98
Instrument lighting 98
Instrument panel, refer to Cockpit 14
Integrated universal remote control 110
Interface socket for onboard diagnosis 148
Interior lamps 99
  remote control 30
Interior mirror
  automatic dimming feature 53
Interior motion sensor 38
  switching off 30, 38
Interior rearview mirror 53
Interlock, refer to Locking steering 61
Intermittent mode, wipers 68
Interval indicator, service 75

J

Jacking points 161
Jump-starting 165

K

Key Memory 60
Keys 28
Kickdown 65

L

Lamps and bulbs 153
Lashing eyes, refer to Securing the load 125
LATCH child-restraint fixing 59
LEDs light-emitting diodes 99
Length, refer to Dimensions 171
License plate lamp bulb replacement 156
Liftgate 34
manual operation 34
opening from the inside 34
opening from the outside 34
remote control 30
Light switch 97
Light-alloy wheels, care, refer to the Caring for your vehicle brochure
Light-emitting diodes LEDs 99
Lighter 115, 116
Lighter socket 115
Lighting of the instruments, refer to Instrument lighting 98
Lights on warning 97
Lights, refer to Parking lamps/Low beams 97
Loading 124
Loading cargo 124
Lock buttons, doors, refer to Locking 33
Locking and unlocking doors
from inside 33
from outside 29, 32
Locking, vehicle
from inside 33
from outside 29, 32
Low beams 97
automatic 97
bulb replacement 153
Lower back support, refer to Lumbar support 45
Low-fuel warning light, refer to Fuel gauge 74
Lug bolts 161
Luggage compartment lid
refer to Liftgate 34
refer to Tailgate 35
Luggage compartment, refer to Cargo area 118
Luggage rack, refer to Roof-mounted luggage rack 126
Luggage straps 36
Lumbar support 45

M

M+S tires, refer to Winter tires 139
Maintenance System 147
Maintenance, refer to Service Interval Display 75
Manual operation
doors 32
fuel filler door 23
glass roof 41
liftgate 34
tailgate 36
Manual transmission 63
Manually switching air conditioner mode on and off 101, 106
Master key, refer to Central key 28
Maximum cooling 106
Maximum roof weight 172
Maximum speed with winter tires 139
Measurements, refer to Dimensions 171
Mechanical key, refer to Spare key 28
Mechanical seats 44
Memo 82
Memory
refer to Seat, mirror and steering wheel memory 49
refer to Vehicle Memory, Key Memory 60
Microfilter
air conditioner 102
automatic climate control 108
Microphone for portable phone, refer to Portable phone 113
MID Multi-Information Display 80
Mirrors 52
automatic curb monitor 50
dimming feature 53
heating 52
memory, refer to Seat, mirror and steering wheel memory 49
self-defrosting 52

Multifunction switch
turn signal indicators/ headlamp flasher 67
washer/wiper system 67
Multi-Information Display MID 80

N

Navigation system, refer to Owner's Manual for Onboard Computer/Radio and Navigation System
Neck support, refer to Head restraints 46
Nozzles, refer to Ventilation 102, 107

O

OBD interface socket 148
Odometer 72
Oil
adding engine oil 144
consumption 143
dipstick 143
filling capacity 173
specified engine oil grades 144
Oil change interval, refer to Service and Warranty Information Booklet, US models or Warranty and Service Guide Booklet, Canadian models
Oil pressure indicator/warning lamp 18
OILSERVICE 75
Old batteries, refer to Disposal 162
Onboard computer, refer to separate Owner's Manuals
Onboard tool kit 152
Opening and closing
from inside 33
from outside 29
using the door lock 32
using the remote control 29
Output, refer to Engine specifications 170
Outside temperature
display 72
changing unit of measure 72, 79
in computer 79

P

Park Distance Control PDC 89
Parking aid, refer to Park Distance Control PDC 89
Parking brake, refer to Handbrake 63
Parking lamps 97
bulb replacement 154
Parking lamps/Low beams 97
Parking the vehicle 62
Parts and accessories, refer to Your individual vehicle 8
Passenger-side mirror tilt function 50
Pathway lighting 97
PDC Park Distance Control 89
Pen tray 114
Permissible axle load, refer to Weights 172
Permissible gross weight, refer to Weights 172
Permissible side tilt 131
Plastic, refer to the Caring for your vehicle brochure
Pollen
refer to Microfilter 102
refer to Microfilter/ activated-charcoal filter 108
Portable phone 113
Power rear-seat backrest adjustment 47
Power seat 45
Power socket, refer to Lighter socket 115
Power windows 38
safety switch 39
Pressure, tires 134
Programming settings, refer to Vehicle Memory, Key Memory 60
Pull-out cargo floor 122

R

Radio navigation, refer to separate Owner's Manual
Radio, refer to Owner's Manual for Radio/Onboard Computer
Radio-control key, refer to Central key with remote control 28
Rain sensor 68

Reading lamps
front 99
rear 99
Real wood, refer to the Caring for your vehicle brochure
Rear backrests, adjustment 47
Rear climate control 107
air supply 108
temperature 108
Rear lamps
refer to Tail lamps 155
replacing bulbs 155
Rear seat back, folding 118
Rear seats, heating 51
Rear window defroster
air conditioner 101
automatic climate control 106
Rear window safety switch 39
Rear window wiper 69
blade replacement 152
Rear-seat backrest, folding down 118
Rearview mirror 52
Recirculated-air mode
air conditioner 101
automatic climate control 106
Refueling 23
fuel filler door 23
Remaining distance for service, refer to Service Interval Display 75
Remaining distance, refer to Cruising range 79, 86
Remote control 29
Removal aid for the spare wheel 159
Removing condensation, windows
air conditioner 102
automatic climate control 105
Replacement fuses 163
Replacement keys 29
Replacement of tires, wheel changes 157
Replacement tire 159
Replacing light bulbs, refer to Lamps and bulbs 153
Replacing tires 136
Reporting safety defects 11
Residual heat 107
Restraint systems for children 56
Restraint systems, refer to Safety belts 48
Reverse gear
Automatic transmission with Steptronic 65
manual transmission 64
Roadside Assistance 164
Roller sun blinds 109
Roll-up cover 119
Roof-mounted luggage rack 126
Rotating coin holder, refer to Storage compartments 114

S

Safety belt tensioners, refer to Safety belts 48
Safety belts 48
care, refer to the Caring for your vehicle brochure
height adjustment 48
safe sitting position 42
warning lamp 20, 48
Safety feature
glass roof 41
power windows 39
Safety systems, refer to
Antilock Brake System 90
Brake system 132
DSC Dynamic Stability Control 91
xDrive 92
Seat heating 50
Seat memory, refer to Seat, mirror and steering wheel memory 49
Seats 43
Securing cargo 125
Selector lever
Automatic transmission with Steptronic 65
Selector lever interlock, refer to Changing selector lever positions 65
Selector lever positions, automatic transmission with Steptronic 64
Self-defrosting mirrors 52
Self-leveling suspension 94
2-axle self-leveling suspension 94
inactive 94
Service and Warranty Information Booklet for US models 147
Service Interval Display 75, 147
Setting interior temperature 101, 105
Setting time, refer to Preselecting switch-on times 83

Shifting
automatic transmission with Steptronic 66
manual transmission 63
Shiftlock, changing the selector-lever position 65
Shoulder support 46
Side airbags 54
Side Impact Head Protection System 54
Side tilt, permissible 131
Side turn signal indicators
replacing bulbs 154
Side window blinds, refer to Rear window blind 109
Sitting safely 42
with airbags 42
with safety belts 42
Ski bag 117
Snow chains 140
Sockets 122
Spare fuses 163
Spare key 28
Spare tire 159
Spare wheel, removal aid 159
Special wash program 68
Specified engine oils 144
Speed indicator, refer to Speedometer 15, 17
Speed limit 84
Speed, winter tires 139
Speedometer 15, 17
Sport Program, automatic transmission with Steptronic 66
Sports seat 44
Stability control
refer to DSC Dynamic Stability Control 91
refer to xDrive 92
Standing lamps 98
Starting assistance, refer to Jump-starting 165
Starting difficulties, temperature 62
Starting the engine 61
Start-off assistance, refer to DSC Dynamic Stability Control 91
Startup difficulties, jump-starting 165
Status of this Owner's Manual at time of printing 9
Steering lock 61
Steering wheel
adjustment 51
adjustment, automatic 51
heater 52
lock 61
memory 49
Steptronic 66
Stopwatch 82
Storage compartments 114
in the cargo area 121
Storage space, refer to Cargo area 118
Storage, tires 139
Store desired speed, refer to Cruise control 70
Storing sitting position, refer to Seat, mirror and steering wheel memory 49
Storing the seat adjustment 49
Stowing cargo 125
Straps, refer to Loading 125
Stroke, refer to Engine specifications 170
Sun blinds 109
Supply reservoir, cleaning systems 143
Switches, refer to Cockpit 14
Switching off the engine 62
Switch-on times input 83
Symbols 8
Synthetic oils 144

T

Tachometer 73
Tail lamps
refer also to Rear lamps 155
replacing bulbs 155
Tailgate 35, 36
manual operation 36
Taking time, refer to Stopwatch 82
Technical data 170
Technical modifications 9
Telephone
refer also to separate Owner's Manual
refer to Portable phone 113
Telephone provisions, refer to Hands-free system 113
Temperature
air conditioner 101
automatic climate control 105
Temperature display
ice warning 72
outside temperature 72, 79
setting the units 72, 79

Thigh support
adjustment 44
Third brake lamp
refer to Center brake lamp 156
replacing bulb 156
Three-point seat belt, refer to Safety belts 48
Tilt alarm sensor
remote control 30
switching off 38
Tilt function, passenger-side mirror 50
Time of arrival 86
Timer, refer to Stopwatch 82
Tire identification number 136
Tire inflation pressure 134
Tire Quality Grading 136
Tire tread 138
Tires
age 136
break-in procedure 130
changing 136, 139, 157
condition 138
damage 138
flat 157
inflation pressure 134
size 136
storage 139
tread 138
wear indicators 138
Tools, refer to Onboard tool kit 152
Torque
lug bolts 161
refer also to Engine specifications 170
Tow fittings 167
Tow sockets for tow fitting 167
Towing the vehicle 167
Towing, eye 167
Track width, refer to Dimensions 171
Transmission
automatic transmission with Steptronic 64
manual transmission 63
Transmission fault, refer to Electronic transmission control module 66
Transmission lockout 65
Transporting children safely 56
Tray for pens 114
Tread depth 138
Tread wear 136
Trip odometer 72
Trip-distance counter, refer to Trip odometer 72
Trunk, refer to Cargo area 99
Turn signal indicators 67
indicator lamp 21
replacing bulbs 155
side, replacing bulbs 154
Turning circle, refer to Dimensions 171
TV function, refer to Owner's Manual for Onboard Computer
Two-axle self-leveling suspension
display 95
lowering 96
raising 95

U

Underbody protection, refer to the Caring for your vehicle brochure
Units, temperature 72, 105
Universal garage door control 110
Universal remote control 110
Unlocking
from inside 33
from outside 29, 32
Unlocking the engine hood 141
Using antifreeze 143, 145

V

Valve
inserts 161
screw caps 161

Vehicle
battery 162
care, refer to the Caring for your vehicle brochure
dimensions 171
loading 124
parking 62
storage, refer to the Caring for your vehicle brochure
washing, refer to the Caring for your vehicle brochure
weights 172
Vehicle jack 158
Vehicle Memory 60
Ventilation 100, 103
draft-free 102, 107
in the rear 102
while stationary 109
Viscosity 144
Voice command system 22
Voice control, refer to separate Owner's Manual
Volume, cargo area 172

W

Warning and indicator lamps 18
Warning triangle 23
Warnings, refer to Check Control 76
Warranty 10
refer also to Service and Warranty Information Booklet for US models or Warranty and Service Guide Booklet for Canadian models
Warranty and Service Guide Booklet for Canadian models 147
Washer fluid 143
reservoir 173
Washer/wiper system 67
Waste container, refer to Ashtray 115, 116
Water on roads, flooding 131
Wear indicators in the tires 138
Weights 172
Wheel bolts, wrench 158
Wheel/tire combinations 139
Wheelbase, refer to Dimensions 171
Wheelslip control
DSC Dynamic Stability Control 91
Width, refer to Dimensions 171
Windows, convenience operation 32
Windshield and headlamp washer system 143
Windshield cleaning 68
Windshield wiper blades
care, refer to the Caring for your vehicle brochure
replacement 152
Windshield wipers, refer to Wiper/washer system 67
Winter tires 139
changing 139
condition 138
storage 139
Wiper blade
replacement 152
Wiper system 67
Wiper/washer reservoir 143
Working in the engine compartment 141
Wrenches, refer to Onboard tool kit 152

X

xDrive 92
Xenon lamps
replacing the bulbs 154

Y

Your individual vehicle 8

Online Edition for Part No. 01 41 0 157 897 - © 08/03 BMW AG

Refueling

BMW recommends Castrol

So that you will have important specifications available when you stop to refuel, we recommend that you supplement this table with data which apply to your vehicle.
Consult the index for individual specifications.

Fuel

Designation	

Please enter your preferred fuel here.

Engine oil

Quality	

The oil volume between the two marks on the oil dipstick corresponds to approx. 1.1 US quarts/1 liter.

Tire inflation pressures	Summer tires		Winter tires	
	Front	Rear	Front	Rear
4 persons				
5 persons or 4 plus luggage				

More about BMW

bmwusa.com

The Ultimate Driving Machine

01 41 0 157 897 ue

Online Edition for Part No. 01 41 0 157 897 - © 08/03 BMW AG

Online Edition for Part No. 01 41 0 157 897 - © 08/03 BMW AG