SFI SYSTEM

PRECAUTION

NOTICE:

- **Perform RESET MEMORY (AT initialization) when replacing the automatic transmission assembly, engine assembly or ECM (See page AX-14).**
- **Perform REGISTRATION (VIN registration) when replacing the ECM (See page ES-13).**

HINT:
Initialization cannot be completed by only removing the battery.

DEFINITION OF TERMS

Terms	Definition
Monitor Description	Description of what ECM monitors and how detects malfunctions (monitoring purpose and details).
Related DTCs	Group of diagnostic trouble codes that are output by ECM based on same malfunction detection logic.
Typical Enabling Condition	Preconditions that allow ECM to detect malfunctions. With all preconditions satisfied, ECM sets DTC when monitored value(s) exceeds malfunction threshold(s).
Sequence of Operation	Order of monitor priority, applied if multiple sensors and components involved in single malfunction detection process. Each sensor and component monitored in turn, when previous detection operation completed.
Required Sensor/Components	Sensors and components used by ECM to detect each malfunction.
Frequency of Operation	Number of times ECM checks for each malfunction during each driving cycle. "Once per driving cycle" means ECM only performs checks for that malfunction once during single driving cycle. "Continuous" means ECM performs checks for that malfunction whenever enabling conditions met.
Duration	Minimum time for which ECM must detect continuous deviation in monitored value(s) in order to set DTC. Timing begins when Typical Enabling Conditions met.
Malfunction Thresholds	Value, beyond which, ECM determines malfunctions exist and sets DTCs.
MIL Operation	Timing of MIL illumination after defected. "Immediate" means ECM illuminates MIL as soon as malfunction detected. "2 driving cycle" means ECM illuminates MIL if same malfunction detected second time during next sequential driving cycle.

PARTS LOCATION

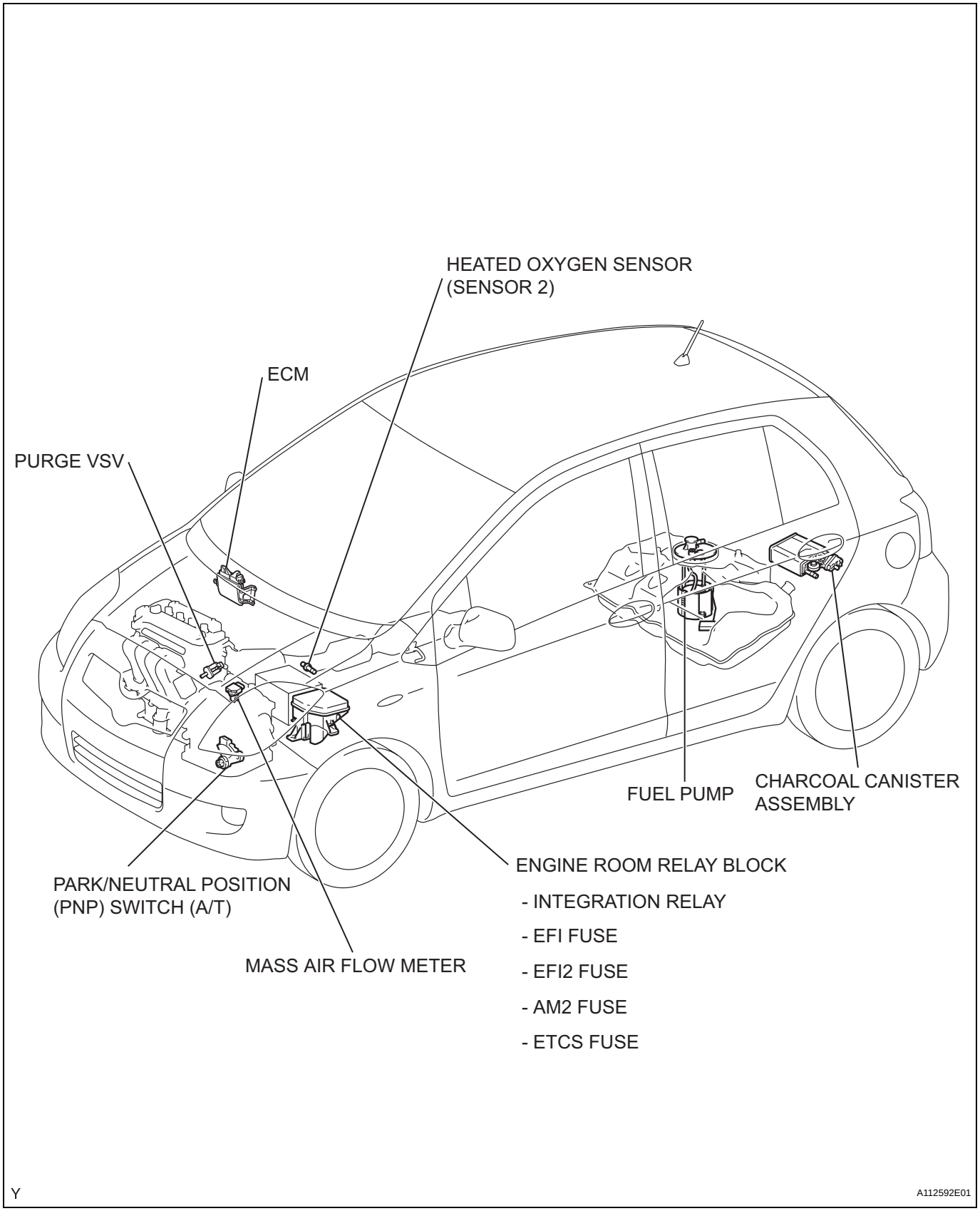

ES

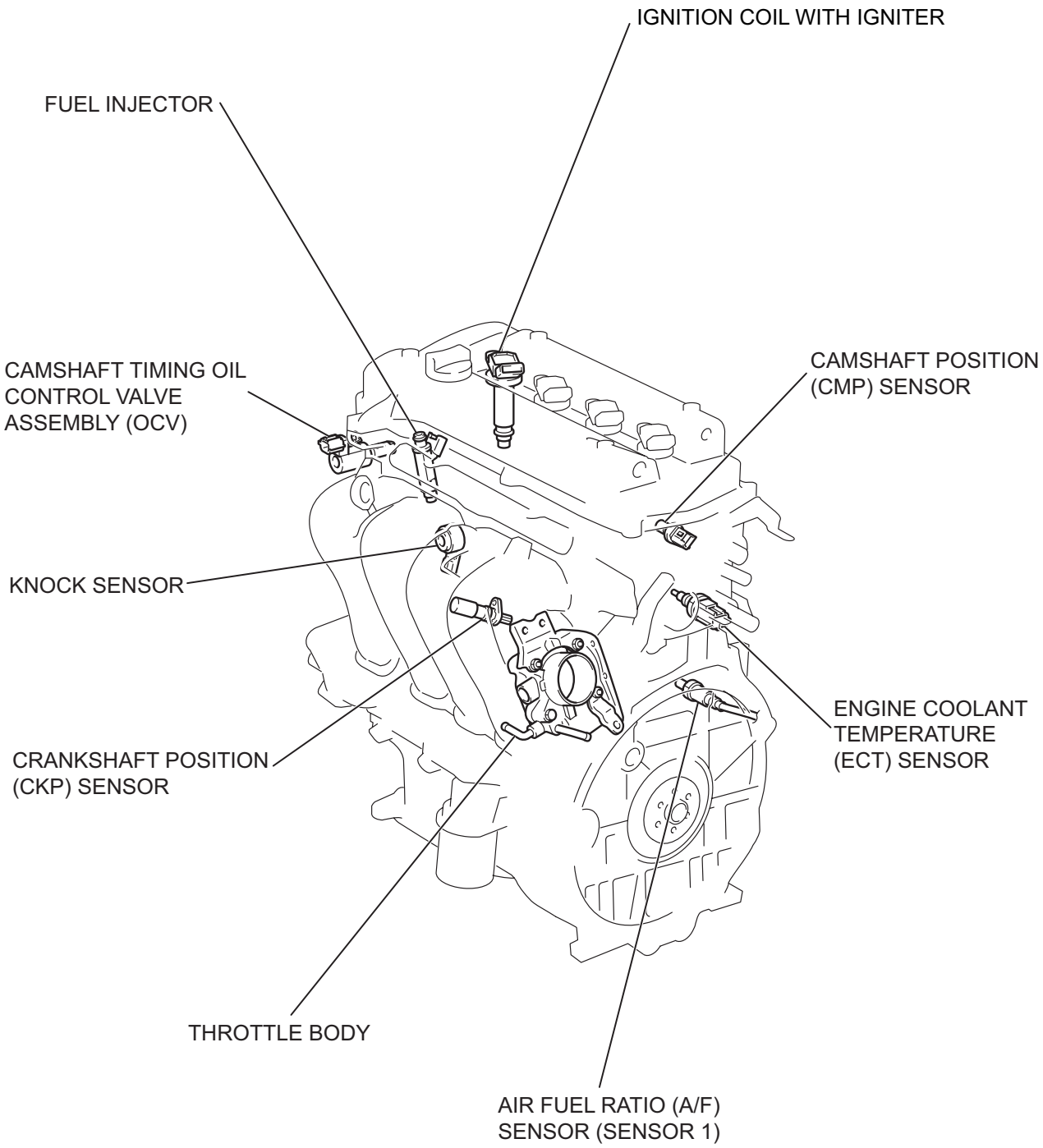

A115674E02

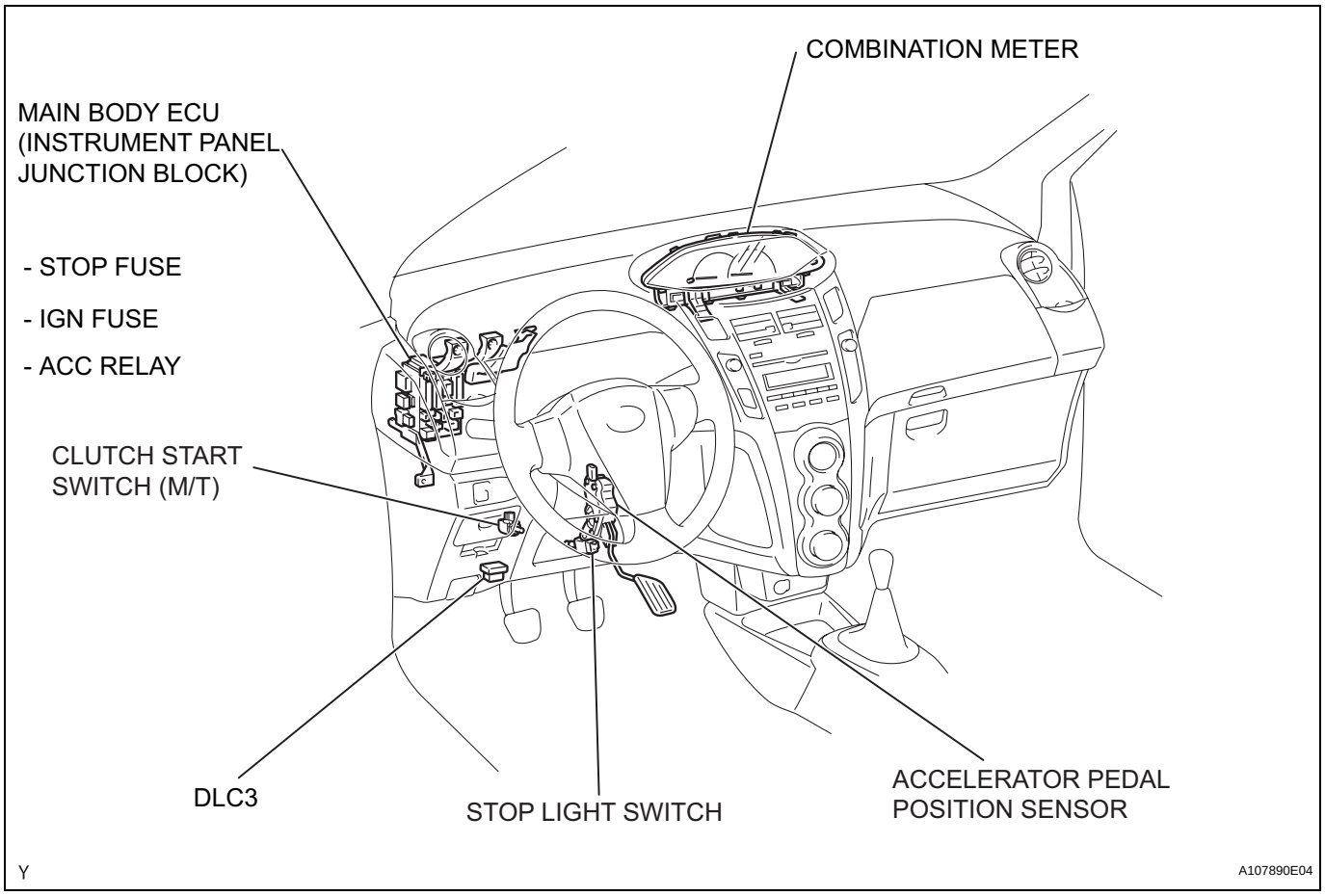
COMBINATION METER
MAIN BODY ECU
(INSTRUMENT PANEL
JUNCTION BLOCK)
- STOP FUSE
- IGN FUSE
- ACC RELAY
CLUTCH START
SWITCH (M/T)
DLC3
STOP LIGHT SWITCH
ACCELERATOR PEDAL
POSITION SENSOR
Y
A107890E04

SYSTEM DIAGRAM

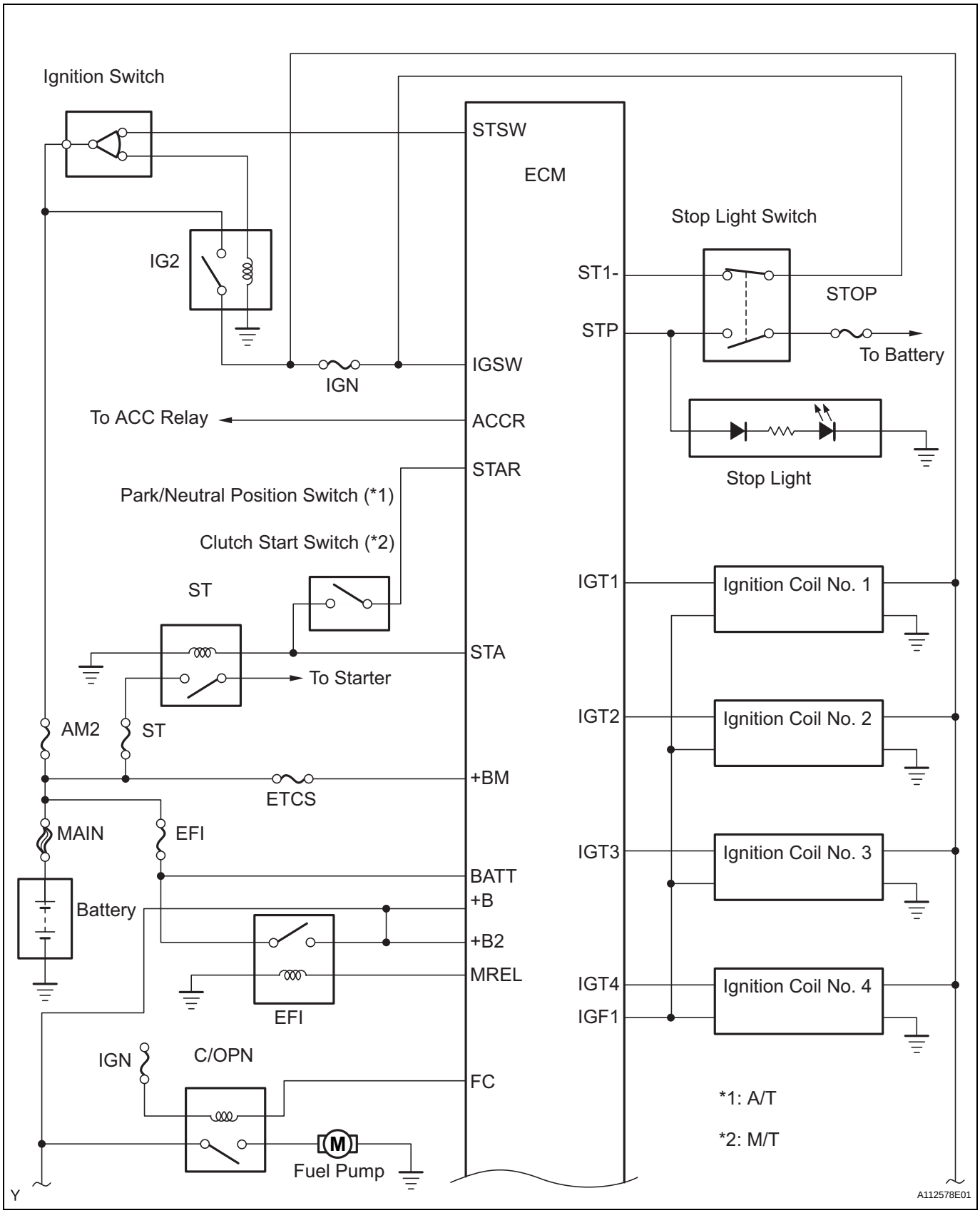

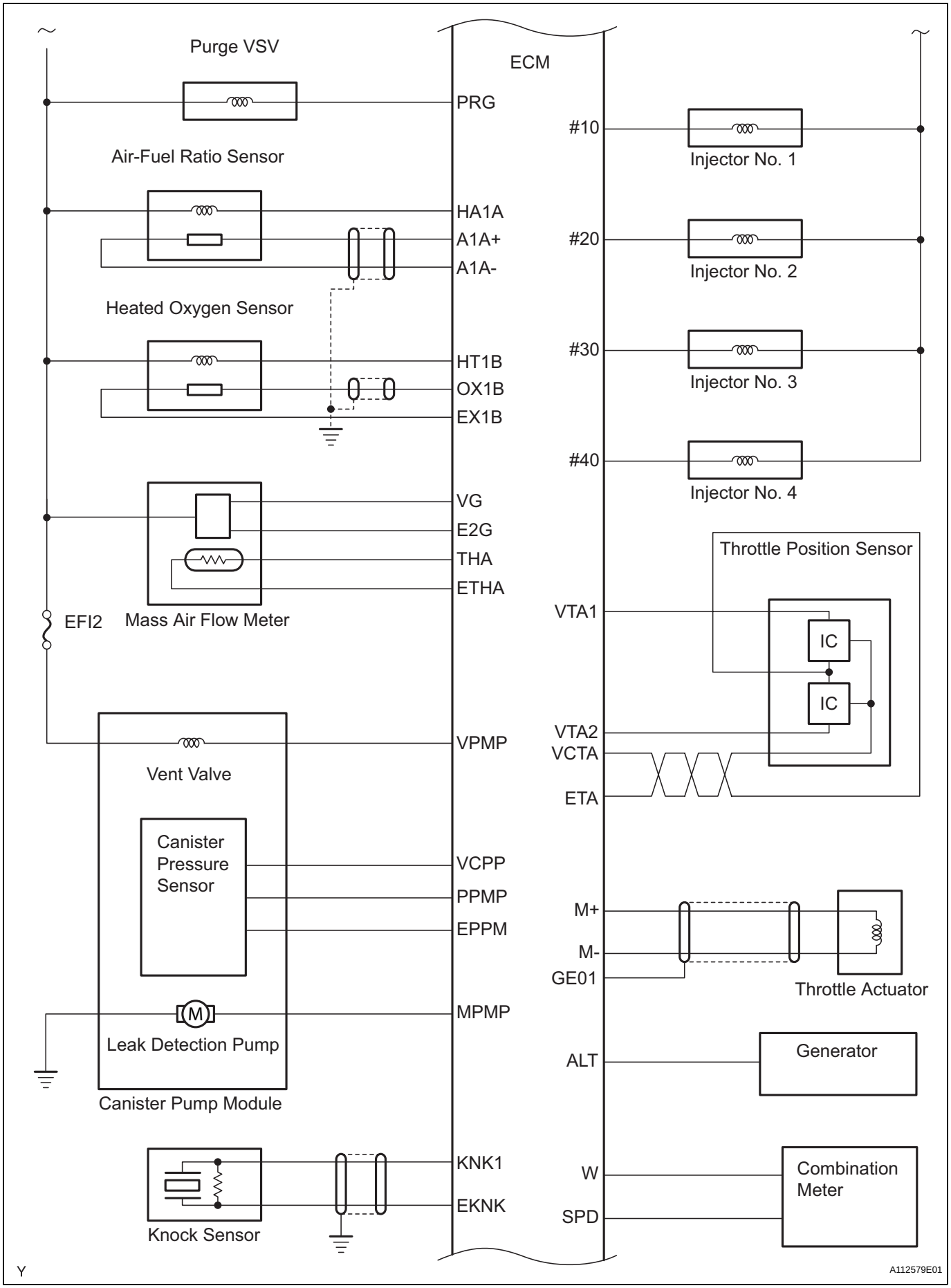
Purge VSV
ECM
PRG
Air-Fuel Ratio Sensor
HA1A
A1A+
A1A-
Heated Oxygen Sensor
HT1B
OX1B
EX1B
VG
E2G
THA
ETHA
EFI2
Mass Air Flow Meter
VPMP
Vent Valve
Canister Pressure Sensor
VCPP
PPMP
EPPM
M
MPMP
Leak Detection Pump
Canister Pump Module
KNK1
EKNK
Knock Sensor
#10
Injector No. 1
#20
Injector No. 2
#30
Injector No. 3
#40
Injector No. 4
Throttle Position Sensor
VTA1
IC
IC
VTA2
VCTA
ETA
M+
M-
GE01
Throttle Actuator
ALT
Generator
W
SPD
Combination Meter
Y
A112579E01

ES

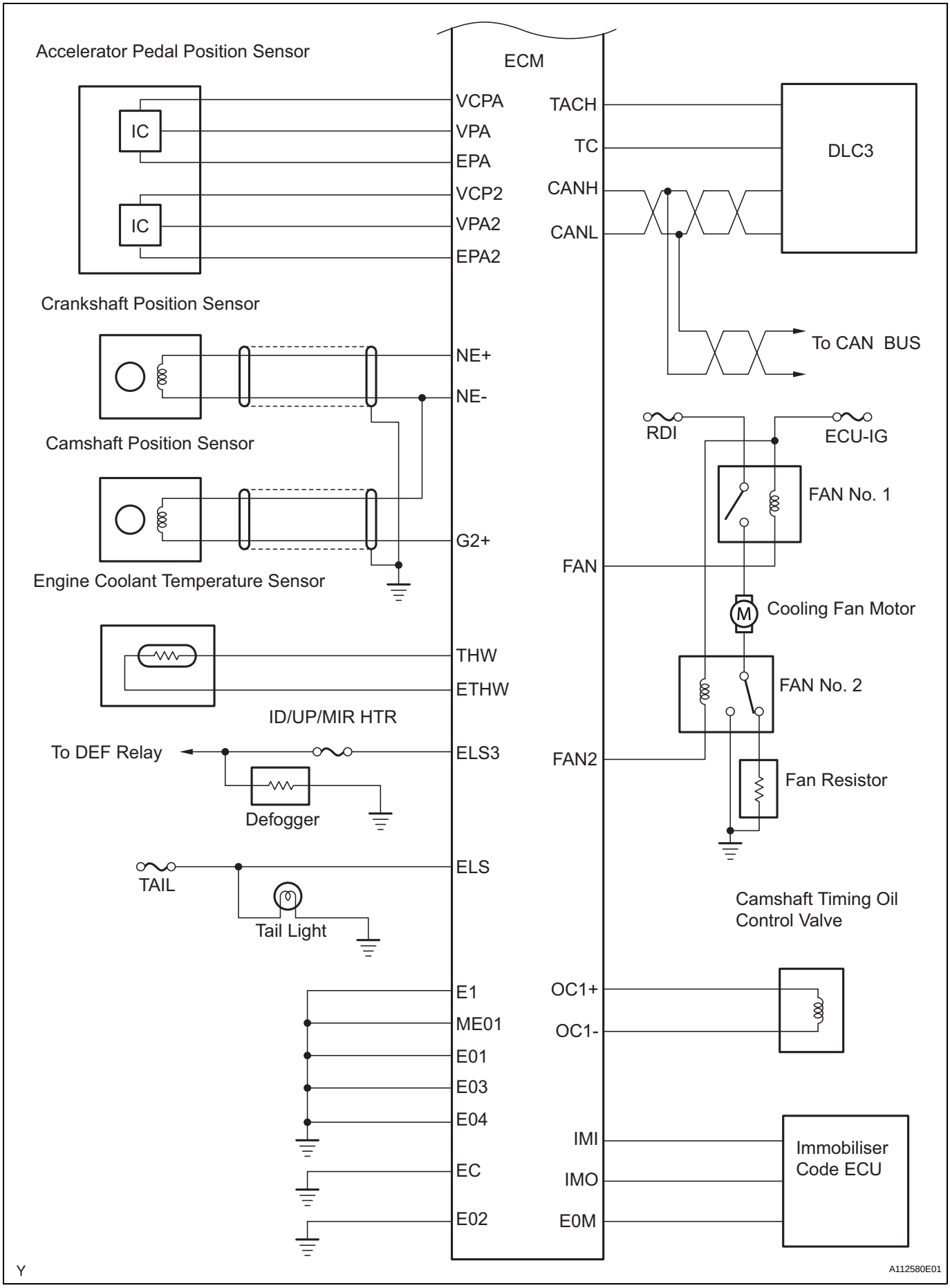
Accelerator Pedal Position Sensor
IC
IC
ECM
VCPA
VPA
EPA
VCP2
VPA2
EPA2
TACH
TC
CANH
CANL
DLC3
To CAN BUS
Crankshaft Position Sensor
NE+
NE-
Camshaft Position Sensor
G2+
Engine Coolant Temperature Sensor
RDI
ECU-IG
FAN No. 1
FAN
Cooling Fan Motor
M
THW
ETHW
ID/UP/MIR HTR
FAN No. 2
To DEF Relay
ELS3
FAN2
Fan Resistor
Defogger
ELS
TAIL
Tail Light
Camshaft Timing Oil
Control Valve
E1
ME01
E01
E03
E04
OC1+
OC1-
IMI
IMO
E0M
Immobiliser
Code ECU
EC
E02
Y
A112580E01

HOW TO PROCEED WITH TROUBLESHOOTING

HINT:
*: Use the intelligent tester.

1	**VEHICLE BROUGHT TO WORKSHOP**

NEXT

2	**CUSTOMER PROBLEM ANALYSIS**

NEXT

3	**CONNECT INTELLIGENT TESTER TO DLC3***

HINT:
If the display indicates a communication fault in the tester, inspect the DLC3.

NEXT

4	**CHECK DTC AND FREEZE FRAME DATA***

HINT:
Record or print DTCs and freeze frame data, if necessary.

NEXT

5	**CLEAR DTC AND FREEZE FRAME DATA***

NEXT

6	**CONDUCT VISUAL INSPECTION**

NEXT

7	**SET CHECK MODE DIAGNOSIS***

NEXT

ES

8	CONFIRM PROBLEM SYMPTOMS

HINT:
If the engine does not start, perform steps 10 and 12 first.

Result	Proceed to
Malfunction does not occur	A
Malfunction occurs	B

B → **GO TO STEP 10**

A

9	SIMULATE SYMPTOMS

NEXT

10	CHECK DTC*

Result	Proceed to
Malfunction code	A
No code	B

B → **GO TO STEP 12**

A

11	REFER TO DTC CHART

NEXT

GO TO STEP 14

12	CONDUCT BASIC INSPECTION

Result	Proceed to
Malfunctioning parts not confirmed	A
Malfunctioning parts confirmed	B

B → **GO TO STEP 17**

A

13 **REFER TO PROBLEM SYMPTOMS TABLE**

Result	Proceed to
Malfunctioning circuit confirmed	A
Malfunctioning parts confirmed	B

B → **GO TO STEP 17**

A

14 **CHECK ECM POWER SOURCE CIRCUIT**

ES

NEXT

15 **CONDUCT CIRCUIT INSPECTION**

Result	Proceed to
Malfunction not confirmed	A
Malfunction confirmed	B

B → **GO TO STEP 18**

A

16 **CHECK FOR INTERMITTENT PROBLEMS**

NEXT

GO TO STEP 18

17 **CONDUCT PARTS INSPECTION**

NEXT

18 **IDENTIFY PROBLEM**

NEXT

19 **ADJUST AND/OR REPAIR**

NEXT

20	CONDUCT CONFIRMATION TEST

NEXT

END

CHECK FOR INTERMITTENT PROBLEMS

HINT:
Inspect the vehicle's ECM using check mode. Intermittent problems are easier to detect with an intelligent tester when the ECM is in check mode. In check mode, the ECM uses 1 trip detection logic, which is more sensitive to malfunctions than normal mode (default), which uses 2 trip detection logic.

1. Clear the DTCs (See page ES-34).
2. Switch the ECM from normal mode to check mode using an intelligent tester (See page ES-37).
3. Perform a simulation test.
4. Check and wiggle the harness(es), connector(s) and terminal(s).

ES

BASIC INSPECTION

When a malfunction is not confirmed by the DTC check, troubleshooting should be carried out in all circuits considered to be possible causes of the problem. In many cases, by carrying out the basic engine check shown in the following flowchart, the location of the problem can be found quickly and efficiently. Therefore, using this check is essential when engine troubleshooting.

1 CHECK BATTERY VOLTAGE

NOTICE:
Conduct this check with the engine stopped and ignition switch OFF.

Result	Proceed to
11 V or more	OK
Below 11 V	NG

NG → **CHARGE OR REPLACE BATTERY**

OK

2 CHECK WHETHER ENGINE WILL CRANK

NG → **PROCEED TO PROBLEM SYMPTOMS TABLE**

OK

3 CHECK WHETHER ENGINE STARTS

NG → **GO TO STEP 6**

OK

4 CHECK AIR FILTER

(a) Visually check that the air filter is not excessively contaminated with dirt or oil.

NG → **REPLACE AIR FILTER**

OK

5 CHECK IDLING SPEED

NG → **TROUBLESHOOT IDLING SPEED AND PROCEED TO NEXT STEP**

OK

6	CHECK FUEL PRESSURE

NG → TROUBLESHOOT FUEL PRESSURE AND PROCEED TO NEXT STEP

OK

7	CHECK FOR SPARK

NG → TROUBLESHOOT SPARK AND PROCEED TO NEXT STEP

OK

PROCEED TO PROBLEM SYMPTOMS TABLE

REGISTRATION

NOTICE:
The Vehicle Identification Number (VIN) must be input into the replacement ECM.
HINT:
The VIN is a 17-digit alphanumeric number. An intelligent tester is required to register the VIN.

1. DESCRIPTION

This registration section consists of three parts, Input Instructions, Read VIN and Write VIN.

(a) Input Instructions: Explains the general VIN input instructions for when using an intelligent tester.

(b) Read VIN: Explains the VIN reading process in a flowchart. This process allows the VIN stored in the ECM to be read, in order to confirm that the two VINs, provided with the vehicle and stored in the vehicle's ECM, are the same.

(c) Write VIN: Explains the VIN writing process in a flowchart. This process allows the VIN to be input into the ECM. If the ECM is changed, or the VIN and VIN do not match, the VIN can be registered, or overwritten in the ECM by following this procedure.

2. INPUT INSTRUCTIONS

(a) Intelligent tester
The arrow buttons (UP, DOWN, RIGHT and LEFT) and numerical buttons (0 to 9) are used to input the VIN.

(b) Cursor Operation
To move the cursor around the tester screen, press the RIGHT and LEFT buttons.

(c) Alphabetical Character Input
(1) Press the UP and DOWN buttons to select the desired alphabetical character.
(2) After selection, the cursor should move.

(d) Numeric Character Input
(1) Press the numerical button corresponding to the number that you want to input.
(2) After input, the cursor should move.
HINT:
Numerical characters can also be selected by using the UP and DOWN buttons.

(e) Correction
(1) When correcting the input character(s), put the cursor onto the character using the RIGHT and LEFT buttons.
(2) Select or input the correct character using the UP/DOWN buttons, or the numerical buttons.

(f) Finishing Input Operation
(1) Make sure that the input VIN matches the vehicle VIN after input.
(2) Press the ENTER button on the tester.

3. READ VIN

(a) Confirm the vehicle VIN.
(b) Connect the intelligent tester to the DLC3.
(c) Turn the ignition switch to ON.
(d) Turn the tester ON.
(e) Select the following menu items: DIAGNOSIS / ENHANCED OBD II / VIN.

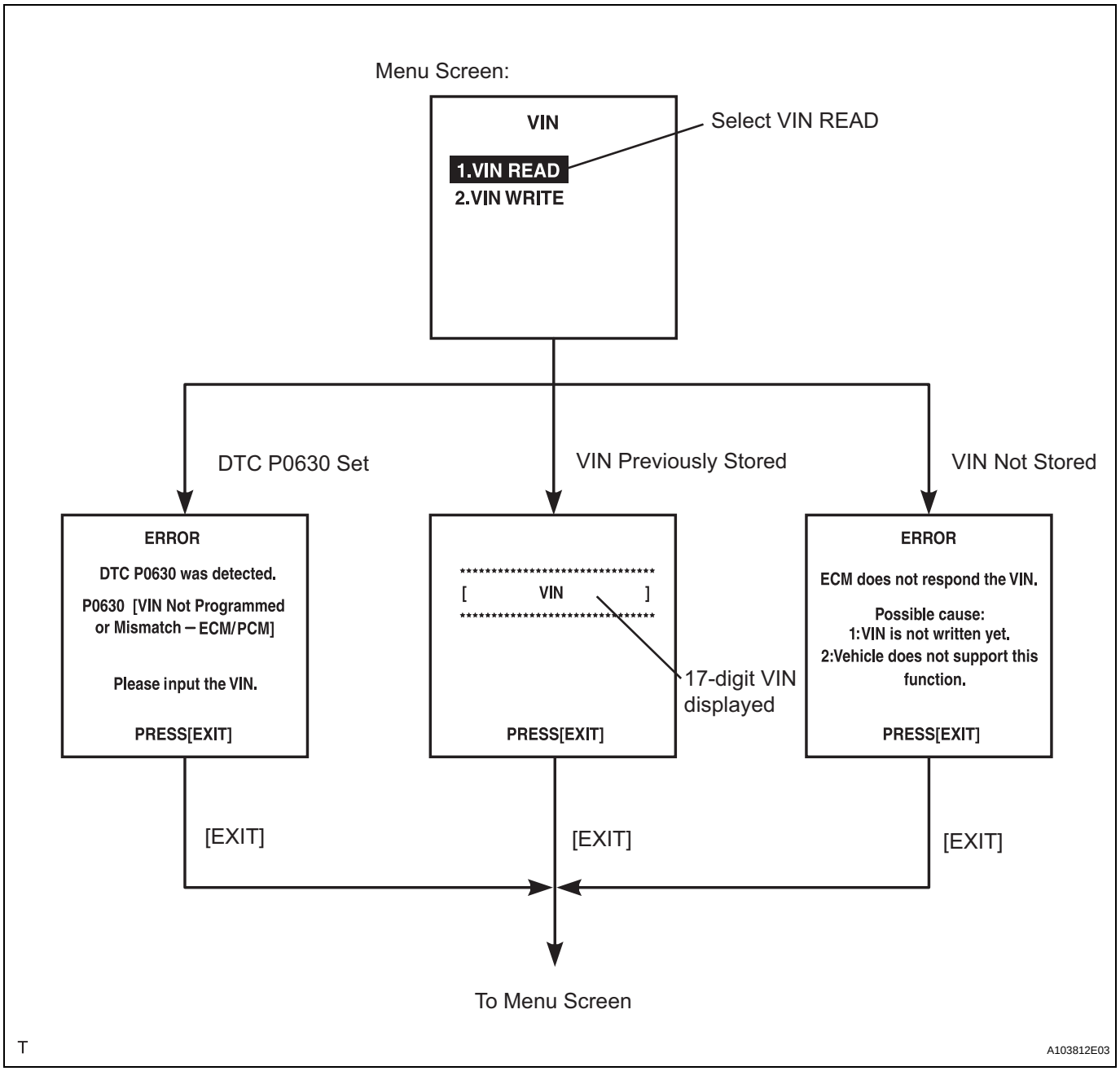

4. WRITE VIN

(a) Confirm the vehicle VIN.
(b) Connect the intelligent tester to the DLC3.
(c) Turn the ignition switch to ON.
(d) Turn the tester ON.

ES

(e) Select the following menu items: DIAGNOSIS / ENHANCED OBD II / VIN.

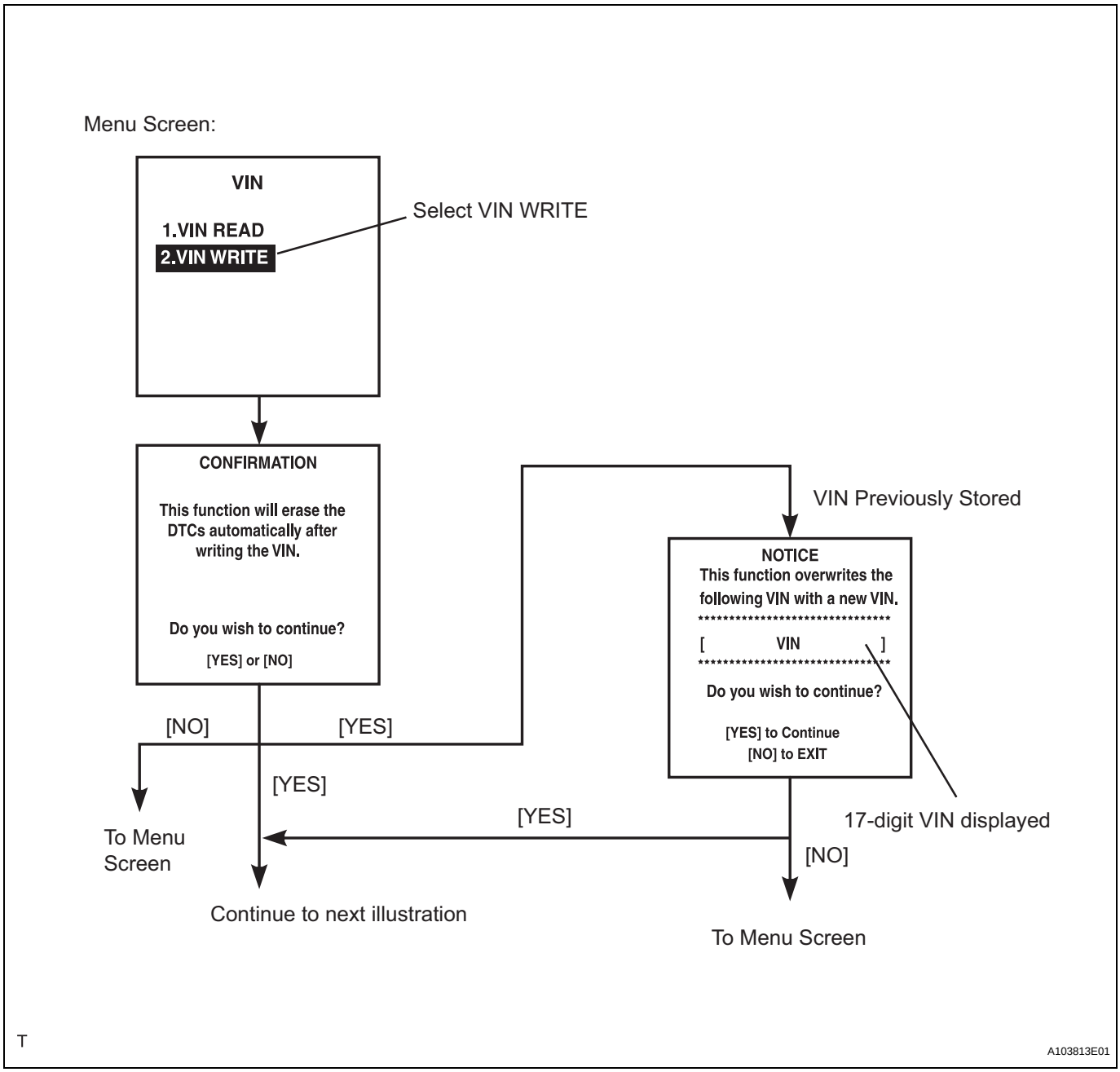

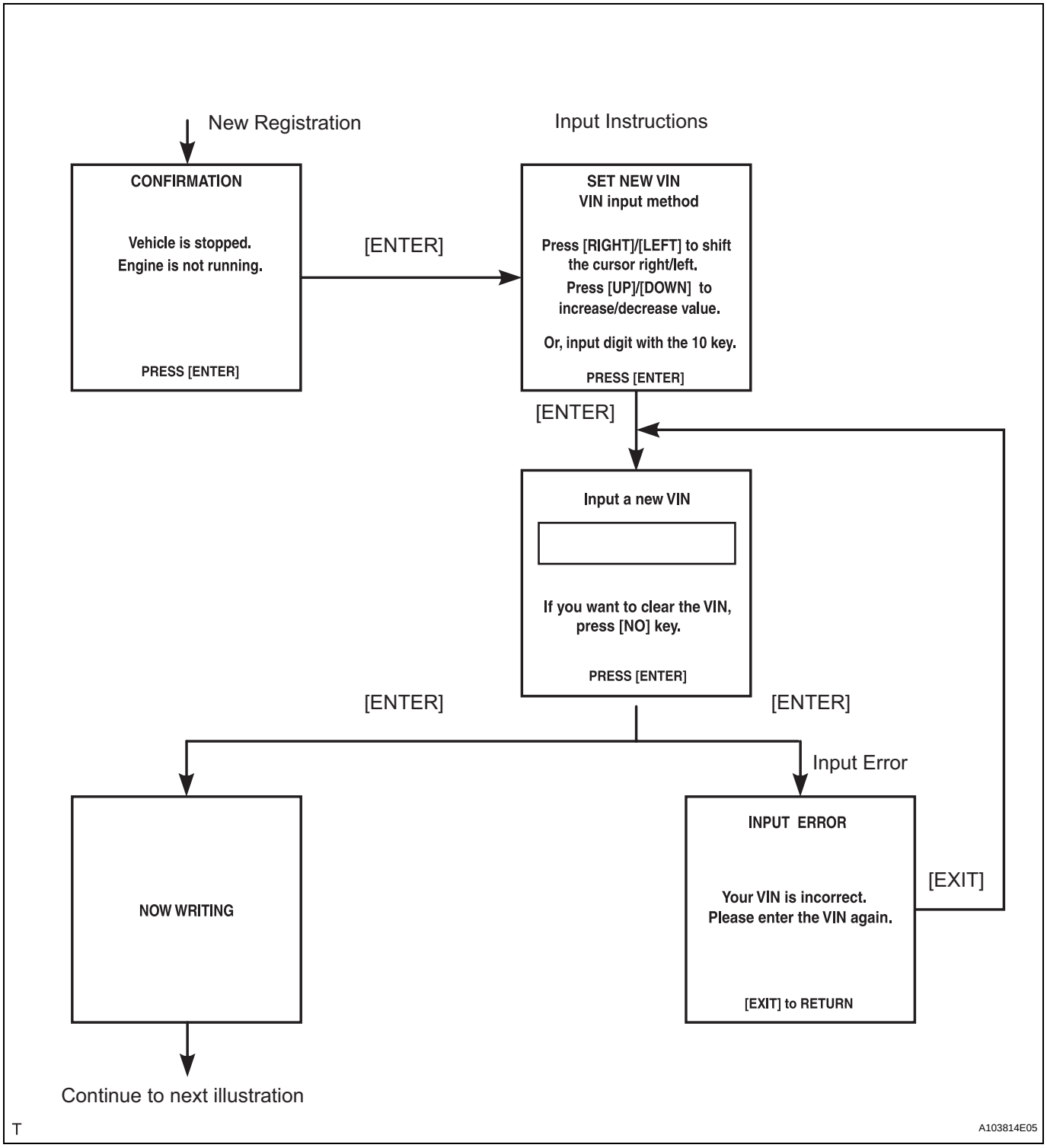
New Registration
Input Instructions
CONFIRMATION
Vehicle is stopped.
Engine is not running.
PRESS [ENTER]
[ENTER]
SET NEW VIN
VIN input method
Press [RIGHT]/[LEFT] to shift the cursor right/left.
Press [UP]/[DOWN] to increase/decrease value.
Or, input digit with the 10 key.
PRESS [ENTER]
[ENTER]
Input a new VIN
If you want to clear the VIN, press [NO] key.
PRESS [ENTER]
[ENTER]
[ENTER]
Input Error
NOW WRITING
INPUT ERROR
Your VIN is incorrect.
Please enter the VIN again.
[EXIT] to RETURN
[EXIT]
Continue to next illustration
T
A103814E05

ES

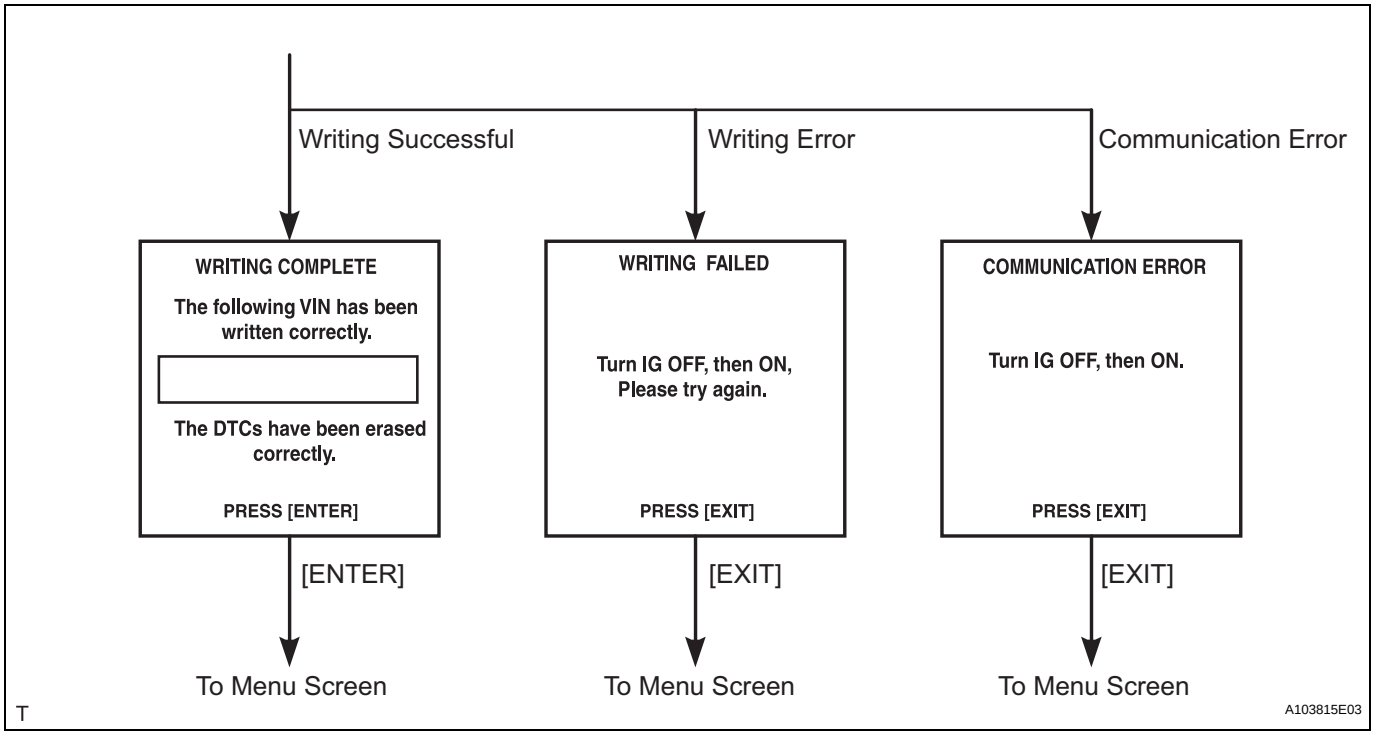
Writing Successful
Writing Error
Communication Error
WRITING COMPLETE
The following VIN has been written correctly.
The DTCs have been erased correctly.
PRESS [ENTER]
WRITING FAILED
Turn IG OFF, then ON, Please try again.
PRESS [EXIT]
COMMUNICATION ERROR
Turn IG OFF, then ON.
PRESS [EXIT]
[ENTER]
[EXIT]
[EXIT]
To Menu Screen
To Menu Screen
To Menu Screen
T
A103815E03

ES

CHECKING MONITOR STATUS

The purpose of the monitor result (mode 06) is to allow access to the results of on-board diagnostic monitoring tests of specific components/systems that are not continuously monitored. Examples are catalysts, evaporative emissions (EVAP) and thermostats.

The monitor result allows the OBD II scan tool to display the monitor status, test value, minimum test limit and maximum test limit. These data are displayed after the vehicle has been driven to run the monitor.

When the test value is not between the minimum and maximum test limits, the ECM (PCM) interprets this as a malfunction. If the test value is on the borderline of the test limits, the component is likely to malfunction in the near future.

Perform the following instruction to view the monitor status. Although this instruction refers to the Lexus/Toyota diagnostic tester, it can be checked using a generic OBD II scan tool. Refer to your scan tool operator's manual for specific procedural information.

1. PERFORM MONITOR DRIVE PATTERN

(a) Connect the intelligent tester to the DLC3.

(b) Turn the ignition switch and the tester ON.

(c) Clear the DTCs (See page ES-34).

(d) Run the vehicle in accordance with the applicable drive pattern described in READINESS MONITOR DRIVE PATTERN (See page ES-19). Do not turn the ignition switch OFF.

NOTE:

The test results will be lost if the ignition switch is turned OFF.

2. ACCESS MONITOR RESULT

(a) Select the following items from the intelligent tester menus: DIAGNOSIS, ENHANCED OBD II, MONITOR INFO and MONITOR RESULT. The monitor status appears after the component name.

- INCMP: The component has not been monitored yet.
- PASS: The component is functioning normally.
- FAIL: The component is malfunctioning.

(b) Confirm that the component is either PASS or FAIL.

(c) Select the component and press ENTER. The accuracy test value appears if the monitor status is either PASS or FAIL.

3. CHECK COMPONENT STATUS

(a) Compare the test value with the minimum test limit (MIN LIMIT) and maximum test limit (MAX LIMIT).

(b) If the test value is between the minimum and maximum test limits, the component is functioning normally. If not, the component is malfunctioning. The test value is usually significantly higher or lower than the test limits. If the test value is on the borderline of the test limits, the component is likely to malfunction in the near future.
HINT:
The monitor result might on rare occasions be PASS even if the malfunction indicator lamp (MIL) is illuminated. This indicates the system malfunctioned on a previous driving cycle. This might be caused by an intermittent problem.

4. MONITOR RESULT INFORMATION

If you use a generic scan tool, multiply the test value by the scaling value listed below.

A/F Sensor (Sensor 1)

Monitor ID	Test ID	Scaling	Unit	Description
$01	$8E	Multiply by 0.001	V	A/F sensor deterioration level
$01	$91	Multiply by 0.004	mA	A/F sensor current

HO2 Sensor (Sensor 2)

Monitor ID	Test ID	Scaling	Unit	Description
$02	$07	Multiply by 0.001	V	Minimum sensor voltage
$02	$08	Multiply by 0.001	V	Maximum sensor voltage
$02	$8F	Multiply by 0.0003	g	Maximum oxygen storage capacity

Catalyst

Monitor ID	Test ID	Scaling	Unit	Description
$21	$A9	Multiply by 0.0003	No dimension	Oxygen storage capacity of catalyst

EVAP

Monitor ID	Test ID	Scaling	Unit	Description
$3D	$C9	Multiply by 0.001	kPa	Test value for small leak (P0456)
$3D	$CA	Multiply by 0.001	kPa	Test value for gross leak (P0455)
$3D	$CB	Multiply by 0.001	kPa	Test value for leak detection pump stuck OFF (P2401)
$3D	$CD	Multiply by 0.001	kPa	Test value for leak detection pump stuck ON (P2402)
$3D	$CE	Multiply by 0.001	kPa	Test value for vent valve stuck OFF (P2420)
$3D	$CF	Multiply by 0.001	kPa	Test value for vent valve stuck ON (P2419)
$3D	$D0	Multiply by 0.001	kPa	Test value for reference orifice low flow (P043E)
$3D	$D1	Multiply by 0.001	kPa	Test value for reference orifice high flow (P043F)
$3D	$D4	Multiply by 0.001	kPa	Test value for purge VSV stuck closed (P0441)
$3D	$D5	Multiply by 0.001	kPa	Test value for purge VSV stuck open (P0441)
$3D	$D7	Multiply by 0.001	kPa	Test value for purge flow insufficient (P0441)

Rear Oxygen Sensor Heater

Monitor ID	Test ID	Scaling	Unit	Description
$42	$91	Multiply by 0.001	Ohm	Oxygen sensor heater resistance

Misfire

Monitor ID	Test ID	Scaling	Unit	Description
$A1	$0B	Multiply by 1	Time	Exponential Weighted Moving Average (EWMA) misfire for all cylinders: EWMA = Total misfire counts for last driving cycle * 0.1 + Last EWMA * 0.9 Misfire counts for last ten driving cycles - Total
$A1	$0C	Multiply by 1	Time	Ignition switch ON: Total misfire counts for last driving cycle Engine running: Total misfire counts for current driving cycle Misfire counts for last or current driving cycle - all cylinders
$A2	$0B	Multiply by 1	Time	Exponential Weighted Moving Average (EWMA) misfire for cylinder 1: EWMA = Total misfire counts for last driving cycle * 0.1 + Last EWMA * 0.9 Misfire counts for last ten driving cycles - Total
$A2	$0C	Multiply by 1	Time	Ignition switch ON: Total misfire counts for last driving cycle Engine running: Total misfire counts for current driving cycle Misfire counts for last or current driving cycle - cylinder 1
$A3	$0B	Multiply by 1	Time	Exponential Weighted Moving Average (EWMA) misfire for cylinder 2: EWMA = Total misfire counts for last driving cycle * 0.1 + Last EWMA * 0.9 Misfire counts for last ten driving cycles - Total
$A3	$0C	Multiply by 1	Time	Ignition switch ON: Total misfire counts for last driving cycle Engine running: Total misfire counts for current driving cycle Misfire counts for last or current driving cycle - cylinder 2
$A4	$0B	Multiply by 1	Time	Exponential Weighted Moving Average (EWMA) misfire for cylinder 3: EWMA = Total misfire counts for last driving cycle * 0.1 + Last EWMA * 0.9 Misfire counts for last ten driving cycles - Total
$A4	$0C	Multiply by 1	Time	Ignition switch ON: Total misfire counts for last driving cycle Engine running: Total misfire counts for current driving cycle Misfire counts for last or current driving cycle - cylinder 3
$A5	$0B	Multiply by 1	Time	Exponential Weighted Moving Average (EWMA) misfire for cylinder 4: EWMA = Total misfire counts for last driving cycle * 0.1 + Last EWMA * 0.9 Misfire counts for last ten driving cycles - Total
$A5	$0C	Multiply by 1	Time	Ignition switch ON: Total misfire counts for last driving cycle Engine running: Total misfire counts for current driving cycle Misfire counts for last or current driving cycle - cylinder 4

ES

READINESS MONITOR DRIVE PATTERN

1. PURPOSE OF READINESS TESTS

- The On-Board Diagnostic (OBD II) system is designed to monitor the performance of emission related components, and indicate any detected abnormalities with DTC (Diagnostic Trouble Codes). Since various components need to be monitored during different driving conditions, the OBD II system is designed to run separate monitoring programs called Readiness Monitors.
- The intelligent tester's software must be version 9.0 or newer to view the Readiness Monitor Status. To view the status, select the following menu items: DIAGNOSIS / ENHANCED OBD II / MONITOR INFO / MONITOR STATUS.
- When the Readiness Monitor status reads COMPL (complete), the necessary conditions have been met for running the performance tests for that Readiness Monitor.
- A generic OBD ll scan tool can also be used to view the Readiness Monitor status.

HINT:
Many state Inspection and Maintenance (I/M) programs require a vehicle's Readiness Monitor status to show COMPL before beginning emission tests.
The Readiness Monitor will be reset to INCMPL (incomplete) if:

- The ECM has lost battery power or blown a fuse.
- DTCs have been cleared.
- The conditions for running the Readiness Monitor have not been met.

If the Readiness Monitor status shows INCMPL, follow the appropriate Readiness Monitor Drive Pattern to change the status to COMPL.

CAUTION:
Strictly observe posted speed limits, traffic laws, and road conditions when performing these drive patterns.
NOTICE:
These drive patterns represent the fastest method of satisfying all conditions necessary to achieve complete status for each specific Readiness Monitor.
In the event of a drive pattern being interrupted (possibly due to factors such as traffic conditions), the drive pattern can be resumed. In most cases, the Readiness Monitor will still achieve complete status upon completion of the drive pattern.
To ensure completion of the Readiness Monitors, avoid sudden changes in vehicle load and speed (driving up and down hills and/or sudden acceleration).

2. CATALYST MONITOR (ACTIVE AIR-FUEL RATIO CONTROL TYPE)

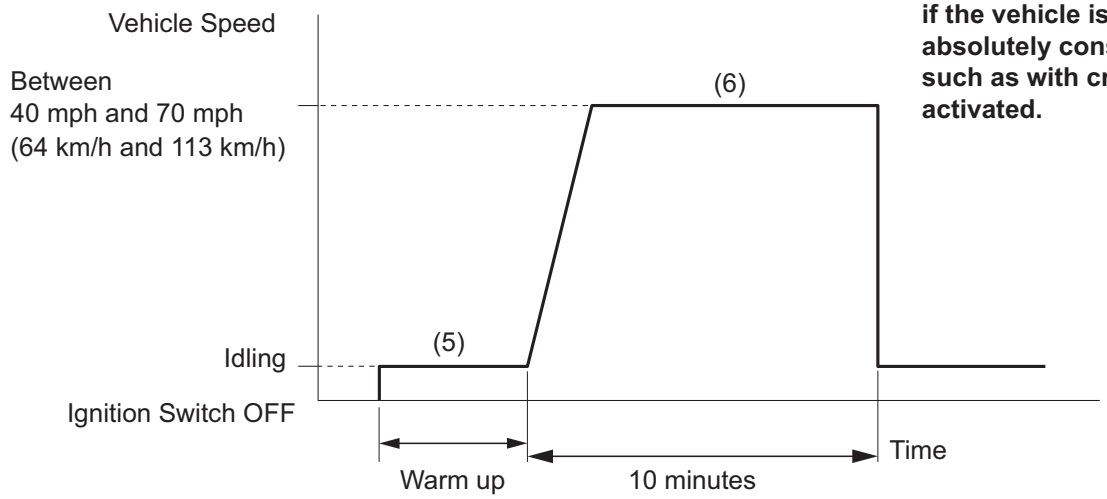

NOTICE:
This test will not be completed if the vehicle is driven at absolutely constant speed such as with cruise control activated.

(Note: Even when vehicle stops during driving pattern, test can be resumed)

P

A115372E11

(a) Preconditions
The monitor will not run unless:
- The MIL is OFF.

(b) Drive Pattern
(1) Connect an intelligent tester to the DLC3.
(2) Turn the ignition switch to ON.
(3) Turn the tester ON.
(4) Clear DTCs (where set) (See page ES-34).
(5) Start the engine and warm it up.
(6) Drive the vehicle at between 40 mph and 70 mph (64 km/h and 113 km/h) for at least 10 minutes.

(c) Monitor Status
Check the Readiness Monitor status displayed on the tester.
If the status does not switch to COMPL (complete), extend the driving time.

3. EVAP SYSTEM MONITOR (KEY OFF TYPE)

(a) Preconditions
The monitor will not run unless:
– The fuel tank is less than 90 % full.
– The altitude is less than 8,000 ft (2,450 m).
– The vehicle is stationary.
– The engine coolant temperature is between 4.4°C and 35°C (40°F and 95°F).
– The intake air temperature is between 4.4°C and 35°C (40°F and 95°F).
– Vehicle was driven in the city area (or on free-way) for 10 minutes or more.

ES

(b) Monitor Conditions
(1) Turn the ignition switch to OFF and wait for 6 hours.
HINT:
Do not start the engine until checking Readiness Monitor status. If the engine is started, the step described above must be repeated.

(c) Monitor Status
(1) Connect an intelligent tester to the DLC3.
(2) Turn the ignition switch to ON.
(3) Turn the tester ON.
(4) Check the Readiness Monitor status displayed on the tester.

If the status does not switch to COMPL (complete), restart the engine, make sure that the preconditions have been met, and then perform the Monitor Conditions again.

4. AIR-FUEL RATIO (A/F) AND HEATED OXYGEN (HO2) SENSOR MONITORS (ACTIVE AIR-FUEL RATIO CONTROL TYPE)

Monitor Drive Pattern

ECT: 75°C (167°F) or more

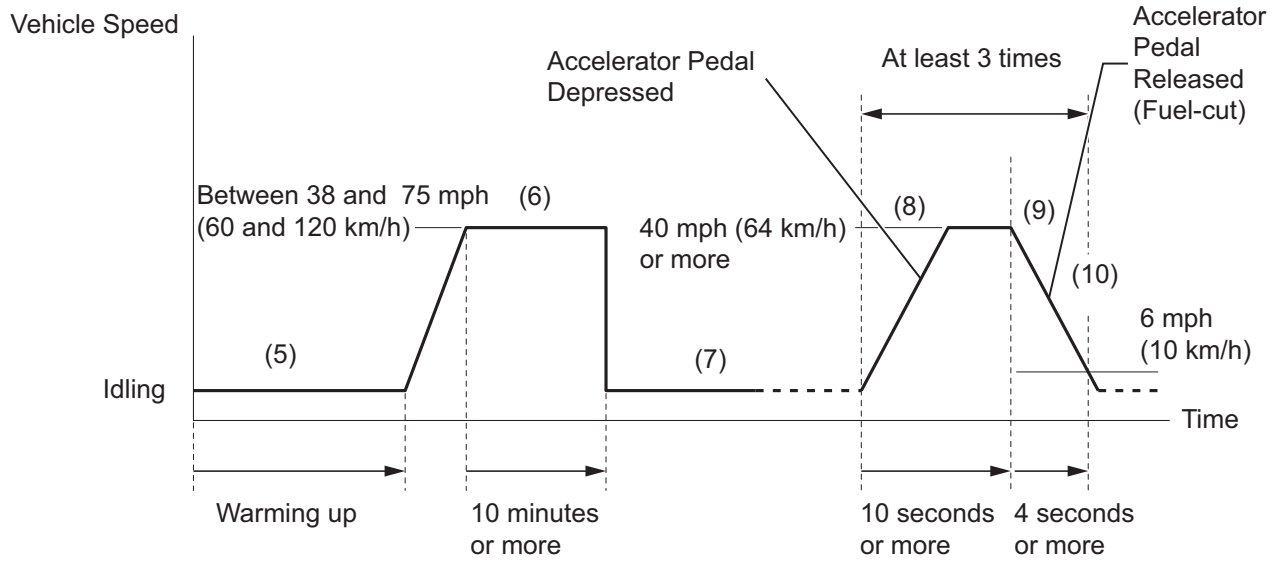

P A115374E03

(a) Preconditions
The monitor will not run unless:
– 2 minutes or more have elapsed since the engine was started.
– The Engine Coolant Temperature (ECT) is 75°C (167°F) or more.
– Cumulative driving time at a vehicle speed of 30 mph (48 km/h) or more exceeds 6 minutes.

– Air-fuel ratio feedback control is performed.

(b) Drive Pattern for front A/F sensor and HO2 sensor
(1) Connect an intelligent tester to the DLC3.
(2) Turn the ignition switch to ON.
(3) Turn the tester ON.
(4) Clear DTCs (See page ES-34).
(5) Start the engine, and warm it up until the ECT reaches 75°C (167°F) or higher.
(6) Drive the vehicle at between 38 mph (60 km/h) and 75 mph (120 km/h) for at least 10 minutes.
(7) Change the transmission to 2nd gear.
(8) Accelerate the vehicle to 40 mph (64 km/h) or more by depressing the accelerator pedal for at least 10 seconds.
(9) Soon after performing step (8) above, release the accelerator pedal for at least 4 seconds without depressing the brake pedal, in order to execute fuel-cut control.
(10) Allow the vehicle to decelerate until the vehicle speed declines to less than 6 mph (10 km/h).
(11) Repeat steps from (8) through (10) above at least 3 times in one driving cycle.

(c) Monitor Status
(1) Check the Readiness Monitor status displayed on the tester.
(2) If the status does not switch to COMPL (complete), make sure that the preconditions have been met, and then perform steps from (5) through (11) in Drive Pattern above.

5. AIR-FUEL RATIO (A/F) AND HEATED OXYGEN (HO2) SENSOR HEATER MONITORS (FRONT A/F AND REAR HO2 SENSOR TYPE)

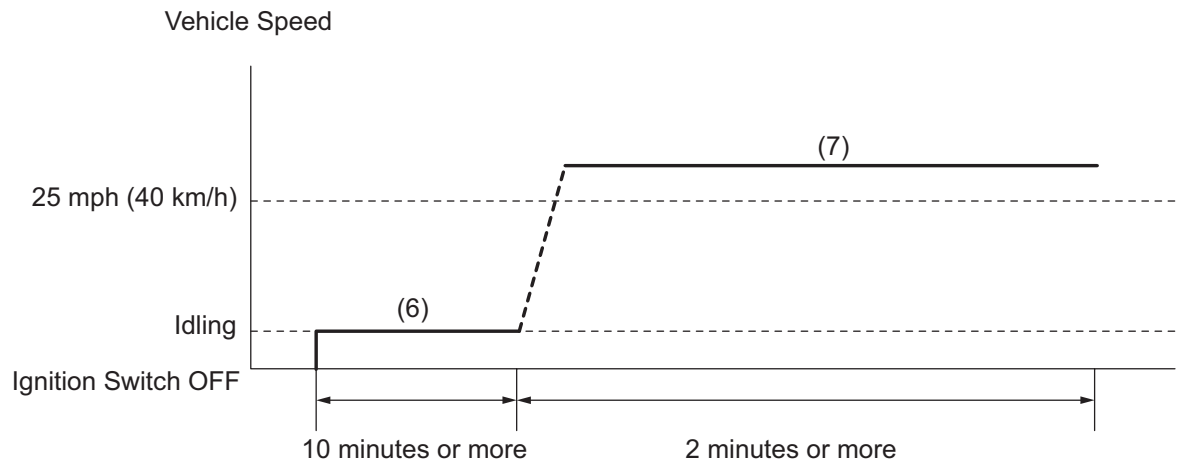

Y A121604E02

(a) Preconditions
The monitor will not run unless:
– The MIL is OFF.

(b) Drive Pattern
(1) Connect an intelligent tester to the DLC3.
(2) Turn the ignition switch to ON.
(3) Turn the tester ON.
(4) Clear DTCs (where set) (See page ES-34).
(5) Start the engine.
(6) Allow the engine to idle for 10 minutes or more.
(7) Drive the vehicle at 25 mph (40 km/h) or more for at least 2 minutes.

(c) Monitor Status
(1) Check the Readiness Monitor status displayed on the tester.
If the status does not switch to COMPL (complete), make sure that the preconditions have been met, and repeat steps through (5) to (7) described in the Drive Pattern above.

PROBLEM SYMPTOMS TABLE

HINT:
Use the table below to help determine the cause of the problem symptom. The potential causes of the symptoms are listed in order of probability in the "Suspected area" column of the table. Check each symptom by checking the suspected areas in the order they are listed. Replace parts as necessary.

SFI SYSTEM

Symptom	Suspected area	See page
Engine does not crank (Does not start)	1. Battery	CH-4
	2. Starter for standard	ST-11
	3. Starter for cold area	ST-23
	4. Cranking holding function circuit	ES-373
	5. Starter relay	ST-32
	6. Park/neutral position switch	AX-107
	7. Clutch start switch	CL-20
	8. Immobiliser System	EI-1
No initial combustion (Does not start)	1. ECM power source circuit	ES-352
	2. Crankshaft position sensor	ES-403
	3. Camshaft position sensor	ES-400
	4. Ignition system	IG-3
	5. Fuel pump control circuit	ES-365
	6. ECM	ES-26
	7. VC output circuit	ES-360
Engine cranks normally but difficult to start	1. Fuel pump control circuit	ES-365
	2. Compression	EM-3
Difficult to start with cold engine	1. Ignition system	IG-3
	2. Spark plug	IG-5
	3. Fuel pump control circuit	ES-365
	4. Injector	FU-16
Difficult to start with warm engine	1. Injector	FU-16
	2. Ignition system	IG-3
	3. Spark plug	IG-5
	4. Fuel pump control circuit	ES-365
High engine idle speed	1. Electronic throttle control system	ES-104
	2. A/C signal circuit	-
	3. ECM power source circuit	ES-352
Low engine idle speed (Poor idling)	1. Electronic throttle control system	ES-104
	2. A/C signal circuit	-
	3. Fuel pump control circuit	ES-365
	4. Air induction system	EC-3
	5. PCV hose	-

Symptom	Suspected area	See page
Rough idling	1. Compression	EM-3
	2. Spark plug	IG-5
	3. Injector	FU-16
	4. Ignition system	IG-3
	5. Fuel pump control circuit	ES-365
	6. Electronic throttle control system	ES-104
	7. Air induction system	EC-3
	8. PCV hose	-
	9. Mass air flow meter	ES-389
Idle hunting	1. Electronic throttle control system	ES-104
	2. Air induction system	EC-3
	3. ECM power source circuit	ES-352
Hesitation/ Poor acceleration	1. Fuel pump control circuit	ES-365
	2. Spark plug	IG-5
	3. Ignition system	IG-3
	4. Injector	FU-16
	5. Mass air flow meter	ES-389
	6. Electronic throttle control system	ES-104
	7. Air induction system	EC-3
	8. Compression	EM-3
Surging (Poor driveability)	1. Spark plug	IG-5
	2. Fuel pump control circuit	ES-365
	3. Ignition system	IG-3
	4. Injector	FU-16
	5. Mass air flow meter	ES-389
	6. Variable valve timing system	ES-56
	7. Compression	EM-3
Engine stalls soon after starting	1. Fuel pump control circuit	ES-365
	2. Spark plug	IG-5
	3. Ignition system	IG-3
	4. Injector	FU-16
	5. Variable valve timing system	ES-56
	6. Electronic throttle control system	ES-104
	7. Air induction system	EC-3
	8. PCV hose	-
	9. Compression	EM-3
Engine stalls only during A/C operation	1. A/C signal circuit	-
	2. ECM	ES-26
Unable/difficult to refuel	1. Refueling valve (canister)	-

TERMINALS OF ECM

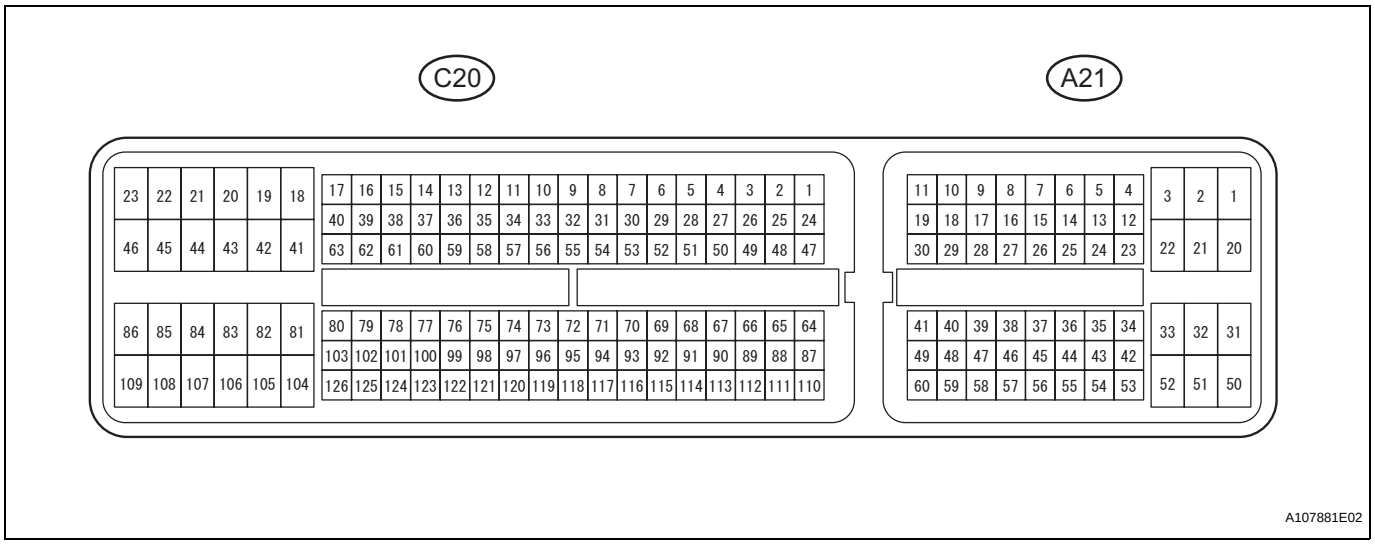

HINT:
The standard normal voltage between each pair of ECM terminals is shown in the table below. The appropriate conditions for checking each pair of terminals are also indicated. The result of checks should be compared with the standard normal voltage for that pair of terminals, displayed in the Specified Condition column. The illustration above can be used as a reference to identify the ECM terminal locations.

Symbols (Terminal No.)	Wiring Colors	Terminal Descriptions	Conditions	Specified Conditions
BATT (A21-20) - E1 (C20-104)	Y - W	Battery (for measuring battery voltage and for ECM memory)	Always	11 to 14 V
+BM (A21-3) - ME01 (C20-43)	GR - BR	Power source of throttle actuator	Always	11 to 14 V
IGSW (A21-28) - E1 (C20-104)	R - W	Ignition switch	Ignition switch ON	11 to 14 V
+B (A21-2) - E1 (C20-104)	B - W	Power source of ECM	Ignition switch ON	11 to 14 V
+B2 (A21-1) - E1 (C20-104)	B - W	Power source of ECM	Ignition switch ON	11 to 14 V
OC1+ (C20-100) - OC1- (C20-123)	BR - R	Camshaft timing oil control valve (OCV)	Idling	Pulse generation (see waveform 1)
MREL (A21-44) - E1 (C20-104)	GR - W	EFI relay	Ignition switch ON	11 to 14 V
VG (C20-118) - E2G (C20-116)	GR - LG	Mass air flow meter	Idling, Shift lever position P or N, A/C switch OFF	0.5 to 3.0 V
THA (C20-65) - ETHA (C20-88)	P - O	Intake air temperature sensor	Idling, Intake air temperature 20°C (68°F)	0.5 to 3.4 V
THW (C20-97) - ETHW (C20-96)	L - P	Engine coolant temperature sensor	Idling, Engine coolant temperature 80°C (176°F)	0.2 to 1.0 V
VCTA (C20-67) - ETA (C20-91)	W - V	Power source of throttle position sensor (specific voltage)	Ignition switch ON	4.5 to 5.5 V
VTA1 (C20-115) - ETA (C20-91)	Y - V	Throttle position sensor (for engine control)	Ignition switch ON, Throttle valve fully closed	0.5 to 1.1 V
			Ignition switch ON, Throttle valve fully open	3.3 to 4.9 V
VTA2 (C20-114) - ETA (C20-91)	GR - V	Throttle position sensor (for sensor malfunction detection)	Ignition switch ON, Throttle valve fully closed	2.1 to 3.1 V
			Ignition switch ON, Throttle valve fully open	4.6 to 5.0 V

ES

ES

Symbols (Terminal No.)	Wiring Colors	Terminal Descriptions	Conditions	Specified Conditions
VPA (A21-55) - EPA (A21-59)	R - G	Accelerator pedal position sensor (for engine control)	Ignition switch ON, Accelerator pedal released	0.5 to 1.1 V
			Ignition switch ON, Accelerator pedal fully depressed	2.6 to 4.5 V
VPA2 (A21-56) - EPA2 (A21-60)	L - BR	Accelerator pedal position sensor (for sensor malfunctioning detection)	Ignition switch ON, Accelerator pedal released	1.2 to 2.0 V
			Ignition switch ON, Accelerator pedal fully depressed	3.4 to 5.0 V
VCPA (A21-57) - EPA (A21-59)	B - G	Power source of accelerator pedal position sensor (for VPA)	Ignition switch ON	4.5 to 5.5 V
VCP2 (A21-58) - EPA2 (A21-60)	W - BR	Power source of accelerator pedal position sensor (for VPA2)	Ignition switch ON	4.5 to 5.5 V
HA1A (C20-109) - E04 (C20-46)	G - W-B	A/F sensor heater	Idling	Below 3.0 V
			Ignition switch ON	11 to 14 V
A1A+ (C20-112) - E1 (C20-104)	V -W	A/F sensor	Ignition switch ON	3.3 V*
A1A- (C20-113) - E1 (C20-104)	LG - W	A/F sensor	Ignition switch ON	3.0 V*
HT1B (C20-47) - E03 (C20-86)	LG - W-B	Heated oxygen sensor heater	Idling	Below 3.0 V
			Ignition switch ON	11 to 14 V
OX1B (C20-64) - EX1B (C20-87)	G - GR	Heated oxygen sensor	Engine speed maintained at 2,500 rpm for 2 minutes after warming up sensor	Pulse generation (see waveform 2)
#10 (C20-108) - E01 (C20-45) #20 (C20-107) - E01 (C20-45) #30 (C20-106) - E01 (C20-45) #40 (C20-105) - E01 (C20-45)	SB - BR GR - BR P - BR L - BR	Injector	Ignition switch ON	11 to 14 V
			Idling	Pulse generation (see waveform 3)
KNK1 (C20-110) - EKNK (C20-111)	R - G	Knock sensor	Engine speed maintained at 4,000 after warming up engine	Pulse generation (see waveform 4)
G2+ (C20-99) - NE- (C20-121)	B - P	Camshaft position sensor	Idling	Pulse generation (see waveform 5)
NE+ (C20-122) - NE- (C20-121)	L - P	Crankshaft position sensor	Idling	Pulse generation (see waveform 5)
IGT1 (C20-85) - E1 (C20-104) IGT2 (C20-84) - E1 (C20-104) IGT3 (C20-83) - E1 (C20-104) IGT4 (C20-82) - E1 (C20-104)	W - W O - W G - W LG - W	Ignition coil (ignition signal)	Idling	Pulse generation (see waveform 6)
IGF1 (C20-81) - E1 (C20-104)	Y - W	Ignition coil (ignition confirmation signal)	Ignition switch ON	4.5 to 5.5 V
			Idling	Pulse generation (see waveform 6)
PRG (C20-49) - E01 (C20-45)	L - BR	Purge VSV	Ignition switch ON	11 to 14 V
			Idling	Pulse generation (see waveform 7)
SPD (A21-8) - E1 (C20-104)	V - W	Speed signal from combination meter	Driving at 12 mph (20 km/h)	Pulse generation (see waveform 8)
STA (A21-48) - E1 (C20-104)	BR - W	Starter signal	Cranking	11 to 14 V
STAR (C20-52) - E1 (C20-104)	O - W	Starter relay control	Ignition switch ON	Below 1.5 V
			Cranking	6.0 V or more
ACCR (A21-13) - E01 (C20-45)	G - BR	ACC (Accessory) relay control signal	Cranking	Below 1.5 V
STSW (A21-14) - E1 (C20-104)	B - W	Ignition switch signal	Ignition switch START	6.0 V or more
STP (A21-36) - E1 (C20-104)	G - W	Stop light switch	Brake pedal depressed	7.5 to 14 V
			Brake pedal released	Below 1.5 V

Symbols (Terminal No.)	Wiring Colors	Terminal Descriptions	Conditions	Specified Conditions
ST1- (A21-35) - E1 (C20-104)	Y - W	Stop light switch (opposite to STP terminal)	Ignition switch ON, Brake pedal depressed	Below 1.5 V
			Ignition switch ON, Brake pedal released	7.5 to 14 V
M+ (C20-42) - ME01 (C20-43)	G - BR	Throttle actuator	Idling with warm engine	Pulse generation (see waveform 9)
M- (C20-41) - ME01 (C20-43)	R - BR	Throttle actuator	Idling with warm engine	Pulse generation (see waveform 10)
FC (A21-7) - E01 (C20-45)	V - BR	Fuel pump control	Ignition switch ON	11 to 14 V
			Idling	Below 1.5 V
W (A21-24) - E1 (C20-104)	B - W	MIL	Ignition switch ON	Below 1.5V
			Idling	11 to 14 V
TC (A21-27) - E1 (C20-104)	P - W	Terminal TC of DLC 3	Ignition switch ON	11 to 14 V
TACH (A21-15) - E1 (C20-104)	LG - W	Engine speed	Idling	Pulse generation (see waveform 11)
VPMP (A21-42) - E1 (C20-104)	P - W	Vent valve (built into canister pump module)	Ignition switch ON	11 to 14 V
MPMP (A21-34) - E1 (C20-104)	V - W	Leak detection pump (built into canister pump module)	Leak detection pump OFF	Below 3 V
			Leak detection pump ON	11 to 14 V
VCPP (C20-70) - EPPM (C20-94)	V - O	Power source for canister pressure sensor (specific voltage)	Ignition switch ON	4.5 to 5.5 V
PPMP (C20-71) - EPPM (C20-94)	L - O	Canister pressure sensor (built into canister pump module)	Ignition switch ON	3 to 3.6 V
ELS (A21-31) - E1 (C20-104)	G - W	Electric load	Tail light switch ON	7.5 to 14 V
			Tail light switch OFF	Below 1.5 V
ELS3 (A21-33) - E1 (C20-104)	V - W	Electric load	Defogger switch ON	7.5 to 14 V
			Defogger switch OFF	Below 1.5 V
FAN (A21-21) - E1 (C20-104)	O - W	Fan No. 1 relay	Ignition switch ON	11 to 14 V
			Idling with A/C ON, or high engine coolant temperature	Below 1.5 V
FAN2 (A21-22) - E1 (C20-104)	LG - W	Fan No. 2 relay	Idling with high engine coolant temperature	Below 1.5 V
ALT (C20-50) - E1 (C20-104)	P - W	Generator	Ignition switch ON	11 to 14 V
CANH (A21-41) - E1 (C20-104)	L - W	CAN communication line	Ignition switch ON	Pulse generation (see waveform 12)
CANL (A21-49) - E1 (C20-104)	W - W	CAN communication line	Ignition switch ON	Pulse generation (see waveform 13)

HINT:
*: The ECM terminal voltage is constant regardless of the output voltage from the sensor.

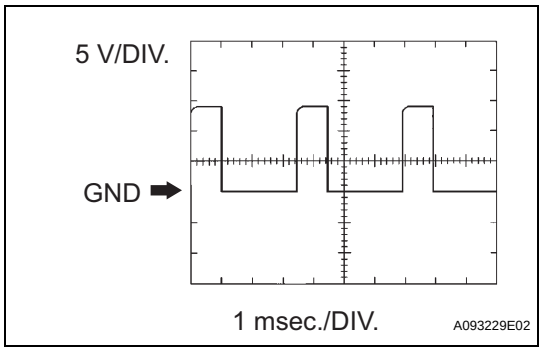

1. WAVEFORM 1
Camshaft timing oil control valve (OCV)

ECM Terminal Names	Between OC1+ and OC1-
Tester Ranges	5 V/DIV, 1 msec./DIV
Conditions	Idling

ES

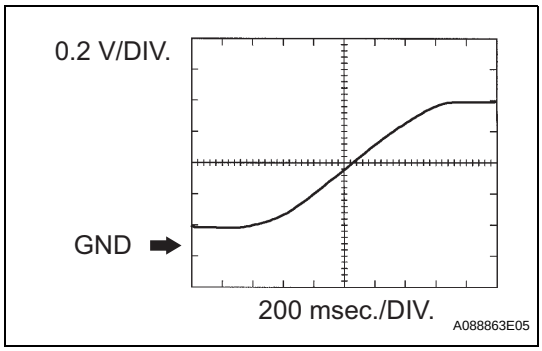

2. WAVEFORM 2
Heated oxygen sensor

ECM Terminal Names	Between OX1B and EX1B
Tester Ranges	0.2 V/DIV, 200 msec./DIV
Conditions	Engine speed maintained at 2,500 rpm for 2 minutes after warming up sensor

HINT:
In DATA LIST, item O2S B1 S2 shows the ECM input values from the heated oxygen sensor.

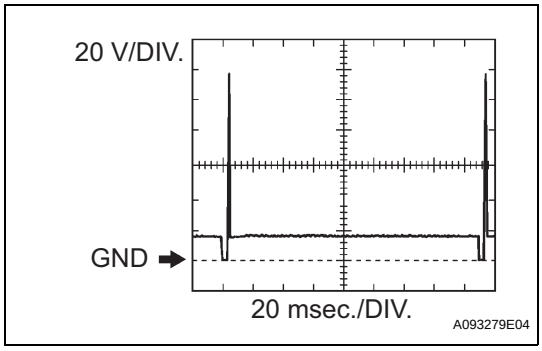

3. WAVEFORM 3
Injector No. 1 (to No. 4) injection signal

ECM Terminal Names	Between #10 (to #40) and E01
Tester Ranges	20 V/DIV, 20 msec./DIV
Conditions	Idling

HINT:
The wavelength becomes shorter as the engine rpm increases.

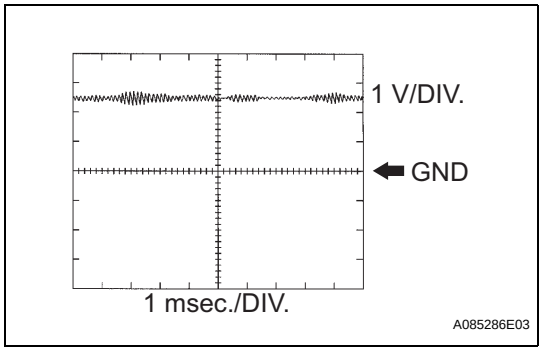

4. WAVEFORM 4
Knock sensor

ECM Terminal Names	Between KNK1 and EKNK1
Tester Ranges	1 V/DIV, 1 msec./DIV
Conditions	Engine speed maintained at 4,000 rpm after warming up engine

HINT:
- The wavelength becomes shorter as the engine rpm increases.
- The waveforms and amplitudes displayed differ slightly depending on the vehicle.

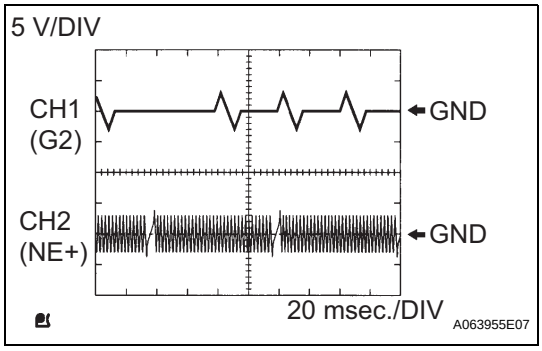

5. WAVEFORM 5
Crankshaft position sensor and Camshaft position sensor

ECM Terminal Names	CH1: Between G2+ and NE- CH2: Between NE+ and NE-
Tester Ranges	5 V/DIV, 20 msec./DIV
Conditions	Idling

HINT:
The wavelength becomes shorter as the engine rpm increases.

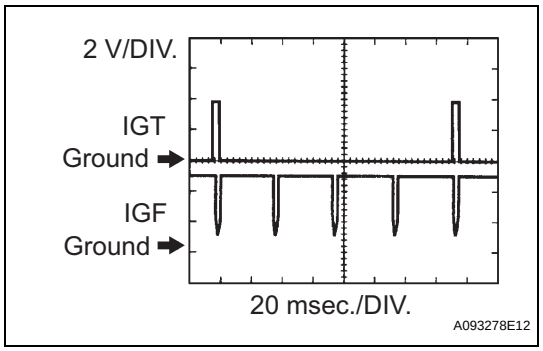

6. WAVEFORM 6
Igniter IGT signal (from ECM to igniter) and Igniter IGF signal (from igniter to ECM)

ECM Terminal Names	Between IGT (1 to 4) and E1 Between IGF1 and E1
Tester Ranges	2 V/DIV, 20 msec./DIV
Conditions	Idling

HINT:
The wavelength becomes shorter as the engine rpm increases.

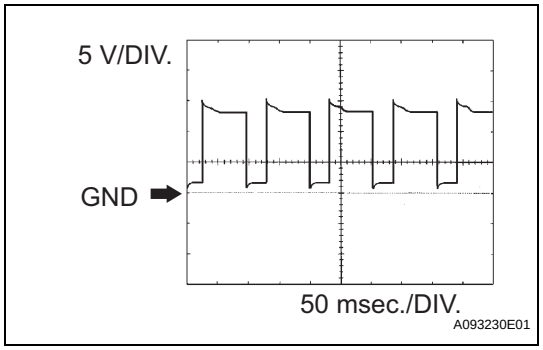

7. WAVEFORM 7
Purge VSV

ECM Terminal Names	Between PRG and E1
Tester Ranges	5 V/DIV, 50 msec./DIV
Conditions	Idling

HINT:
If the waveform is not similar to the illustration, check the waveform again after idling for 10 minutes or more.

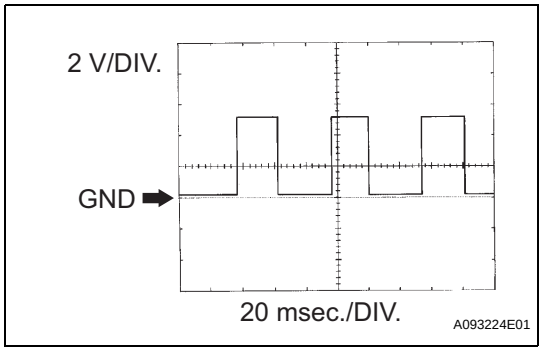

8. WAVEFORM 8
Vehicle speed signal

ECM Terminal Names	Between SPD and E1
Tester Ranges	2 V/DIV, 20 msec./DIV
Conditions	Driving at 12 mph (20 km/h)

HINT:
The wavelength becomes shorter as the vehicle speed increases.

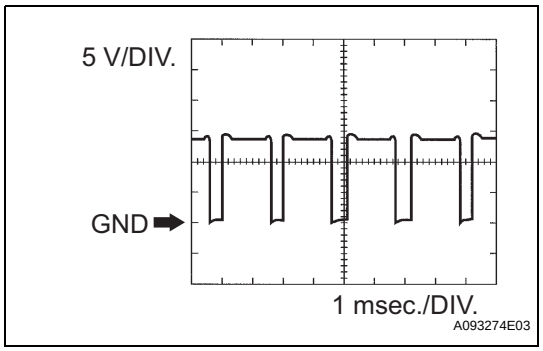

9. WAVEFORM 9
Throttle actuator positive terminal

ECM Terminal Names	Between M+ and ME01
Tester Ranges	5 V/DIV, 1 msec./DIV
Conditions	Idling with warm engine

HINT:
The duty ratio varies depending on the throttle actuator operation.

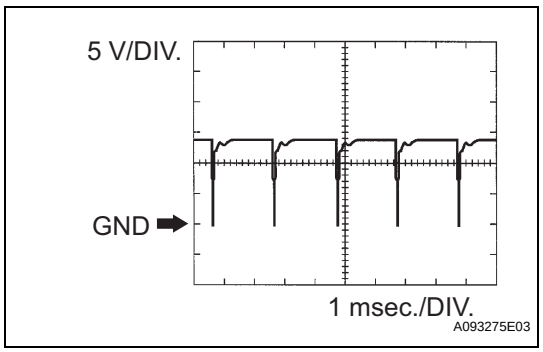

10. WAVEFORM 10
Throttle actuator negative terminal

ECM Terminal Names	Between M- and ME01
Tester Ranges	5 V/DIV, 1 msec./DIV
Conditions	Idling with warm engine

HINT:
The duty ratio varies depending on the throttle actuator operation.

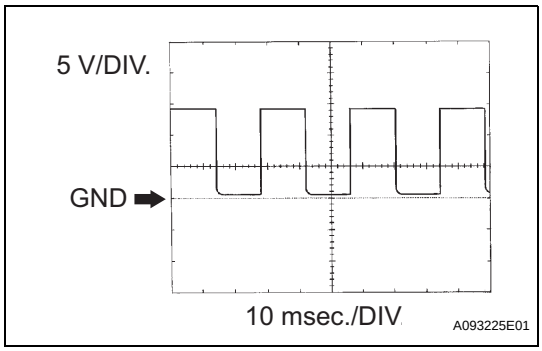

11. WAVEFORM 11
Engine speed signal

ECM Terminal Names	Between TACH and E1
Tester Ranges	5 V/DIV, 10 msec./DIV
Conditions	Idling

HINT:
The wavelength becomes shorter as the engine rpm increases.

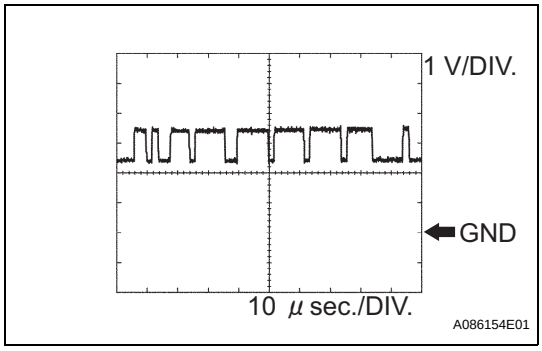

12. WAVEFORM 12
Reference: CAN communication signal

ECM Terminal Names	Between CANH and E1
Tester Ranges	1 V/DIV, 10 μs/DIV
Conditions	Engine stops and ignition switch ON

HINT:
The waveform varies depending on the CAN communication signal.

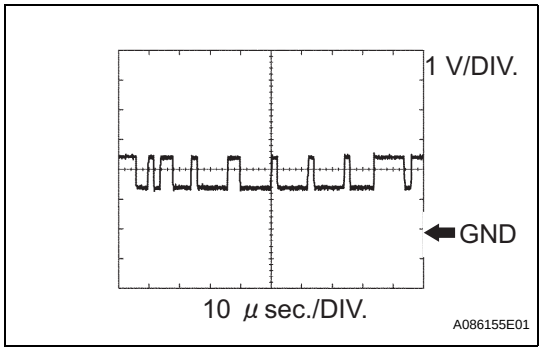

13. WAVEFORM 13
Reference: CAN communication signal

ECM Terminal Names	Between CANL and E1
Tester Ranges	1 V/DIV, 10 μs/DIV
Conditions	Engine stops and ignition switch ON

HINT:
The waveform varies depending on the CAN communication signal.

DIAGNOSIS SYSTEM

1. DESCRIPTION

When troubleshooting OBD II (On-Board Diagnostics) vehicles, an intelligent tester (complying with SAE J1987) must be connected to the DLC3 (Data Link Connector 3) of the vehicle. Various data in the vehicle's ECM (Engine Control Module) can be then read.

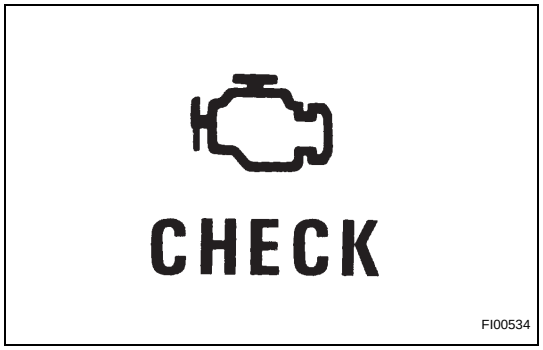

OBD ll regulations require that the vehicle's on-board computer illuminate the MIL (Malfunction Indicator Lamp) on the instrument panel when the computer detects a malfunction in:

(a) The emission control system components.
(b) The power train control components (which affect vehicle emissions).
(c) The computer itself.

In addition, if the applicable DTCs (Diagnostic Trouble Codes) prescribed by SAE J2012 are not recorded on 3 consecutive trips, the MIL turns off automatically but the DTCs remain recorded in the ECM memory.

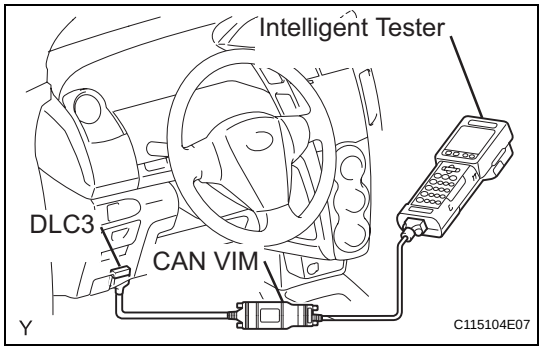

To check DTCs, connect the intelligent tester to the DLC3. The tester displays DTCs, freeze frame data, and a variety of the engine data. The DTCs and freeze frame data can be erased with the tester (See page ES-34).

In order to enhance OBD function on vehicles and develop the Off-Board diagnosis system, CAN communication is introduced in this system (CAN: Controller Area Network). It minimizes the gap between technician skills and vehicle technology. CAN is a network, which uses a pair of data transmission lines, spanning multiple computers and sensors. It allows high speed communication between the systems and simplifies the wire harness connection.

Since this system is equipped with the CAN communication, connecting the CAN VIM (VIM: Vehicle Interface Module) to the intelligent tester is necessary to display any information from the ECM. (Also the communication between the intelligent tester and the ECM uses CAN communication signals). When confirming the DTCs and any data of the ECM, connect the CAN VIM between the DLC3 and the intelligent tester.

2. NORMAL MODE AND CHECK MODE

The diagnosis system operates in normal mode during normal vehicle use. In normal mode, 2 trip detection logic is used to ensure accurate detection of malfunctions. Check mode is also available as an option for technicians. In check mode, 1 trip detection logic is used for simulating malfunction symptoms and increasing the system's ability to detect malfunctions, including intermittent problems (intelligent tester only) (See page ES-37).

ES

ES

3. 2 TRIP DETECTION LOGIC

When a malfunction is first detected, the malfunction is temporarily stored in the ECM memory (1st trip). If the same malfunction is detected during the next subsequent drive cycle, the MIL is illuminated (2nd trip).

4. FREEZE FRAME DATA

Freeze frame data record the engine conditions (fuel system, calculated engine load, engine coolant temperature, fuel trim, engine speed, vehicle speed, etc.) when malfunctions are detected. When troubleshooting, freeze frame data can help determine if the vehicle was moving or stationary, if the engine was warmed up or not, if the air-fuel ratio was lean or rich, and other data from the time the malfunction occurred.

5. DLC3 (Data Link Connector 3)

(a) The ECM uses ISO 15765-4 for communication. The terminal arrangement of the DLC3 complies with SAE J1962 and matches the ISO 15765-4 format.

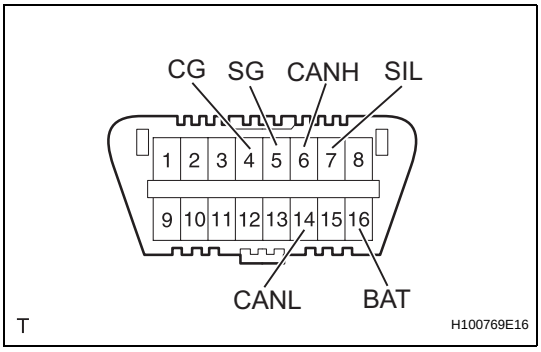

Symbol (Terminal No.)	Terminal Description	Condition	Specified Condition
SIL (7) - SG (5)	Bus "+" line	During transmission	Pulse generation
CG (4) - Body ground	Chassis ground	Always	Below 1 Ω
SG (5) - Body ground	Signal ground	Always	Below 1 Ω
BAT (16) - Body ground	Battery positive	Always	11 to 14 V
CANH (6) - CANL (14)	CAN bus line	Ignition switch off *	54 to 69 Ω
CANH (6) - CG (4)	HIGH-level CAN bus line	Ignition switch off *	200 Ω or higher
CANL (14) - CG (4)	LOW-level CAN bus line	Ignition switch off *	200 Ω or higher
CANH (6) - BAT (16)	HIGH-level CAN bus line	Ignition switch off *	6 kΩ or higher
CANL (14) - BAT (16)	LOW-level CAN bus line	Ignition switch off *	6 kΩ or higher

NOTICE:

***: Before measuring the resistance, leave the vehicle as is for at least 1 minute and do not operate the ignition switch, any other switches or the doors.**

HINT:

The DLC3 is the interface prepared for reading various data from the vehicle's ECM. After connecting the cable of an intelligent tester to the CAN VIM, turn the ignition switch to ON and turn the tester ON. If a communication failure message is displayed on the tester screen (on the tester: UNABLE TO CONNECT TO VEHICLE), a problem exists in either the vehicle or tester. In order to identify the location of the problem, connect the tester to another vehicle.

If communication is normal: Inspect the DLC3 on the original vehicle.
If communication is still not possible: The problem is probably in the tester itself. Consult the Service Department listed in the instruction manual.

6. BATTERY VOLTAGE

Standard battery voltage:
11 to 14 V

If the voltage is below 11 V, replace or recharge the battery before proceeding

7. MIL (Malfunction Indicator Lamp)

(a) The MIL is illuminated when the ignition switch is first turned on (the engine is not running).

(b) The MIL should turn OFF when the engine is started. If the MIL remains illuminated, the diagnosis system has detected a malfunction or abnormality in the system.
HINT:
If the MIL is not illuminated when the ignition switch is first turned on, check the MIL circuit (See page ES-384).

8. ALL READINESS

For the vehicle, using the intelligent tester allows readiness codes corresponding to all DTCs to be read. When diagnosis (normal or malfunctioning) has been complete, readiness codes are set. Select the following menu items: ENHANCED OBD II / MONITOR INFO on the intelligent tester.

DTC CHECK / CLEAR

NOTICE:
When the diagnosis system is changed from normal mode to check mode or vice versa, all DTCs and freeze frame data recorded in normal mode are erased. Before changing modes, always check and make a note of any DTCs and freeze frame data.

HINT:

- DTCs which are stored in the ECM can be displayed on an intelligent tester. An intelligent tester can display current and pending DTCs.
- Some DTCs are not set if the ECM does not detect the same malfunction again during a second consecutive driving cycle. However, such malfunctions, detected on only one occasion, are stored as pending DTCs.
- The pending DTCs are set when the malfunction is detected once.

1. CHECK DTC (Using an intelligent tester)

(a) Connect an intelligent tester to the DLC3.
(b) Turn the ignition switch to ON.
(c) Turn the tester ON.
(d) Select the following menu items: DIAGNOSIS / ENHANCED OBD II / DTC INFO / CURRENT CODES or PENDING CODES.
(e) Check the DTC(s) and freeze frame data, and then write them down.
(f) Check the details of the DTC(s) (See page ES-48).

2. CLEAR DTC (Using an intelligent tester)

(a) Connect the intelligent tester to the DLC3.
(b) Turn the ignition switch to ON.
(c) Turn the tester ON.
(d) Select the following menu items: DIAGNOSIS / ENHANCED OBD II / DTC INFO / CLEAR CODES.
(e) Press the YES button.

3. CLEAR DTC (Without using an intelligent tester)

(a) Perform either of the following operations.
(1) Disconnect the negative battery cable for more than 1 minute.
(2) Remove the EFI and ETCS fuses from the engine room relay block located inside the engine compartment for more than 1 minute.

FREEZE FRAME DATA

1. DESCRIPTION

Freeze frame data record the engine conditions (fuel system, calculated load, engine coolant temperature, fuel trim, engine speed, vehicle speed, etc.) when a malfunction is detected. When troubleshooting, it can help determine if the vehicle was running or stopped, the engine was warmed up or not, the air-fuel ratio was Lean or Rich, and other data from the time the malfunction occurred.

HINT:

If it is impossible to duplicate the problem even though a DTC is detected, confirm the freeze frame data.

The ECM records engine conditions in the form of freeze frame data every 0.5 seconds. Using the intelligent tester, five separate sets of freeze frame data, including the data values at the time when the DTC was set, can be checked.

– 3 data sets before the DTC was set.
– 1 data set when the DTC was set.
– 1 data set after the DTC was set.

These data sets can be used to simulate the condition of the vehicle around the time of the occurrence of the malfunction. The data may assist in identifying the cause of the malfunction, and in judging whether it was temporary or not.

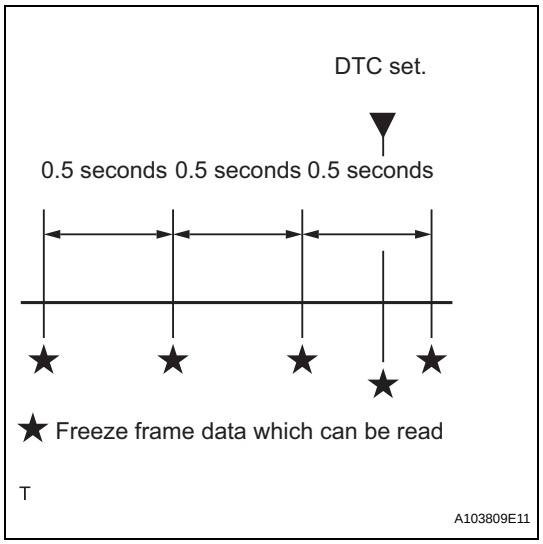

2. LIST OF FREEZE FRAME DATA

LABEL (Intelligent Tester Display)	Measure Item	Diagnostic Note
INJECTOR	Injection period of No. 1 cylinder	-
IGN ADVANCE	Ignition advance	-
CALC LOAD	Calculated load	Calculated load by ECM
VEHICLE LOAD	Vehicle load	-
MAF	Mass air flow volume	If approximately 0.0 g/sec: • Mass air flow meter power source circuit open or short • VG circuit open or short If 160.0 g/sec or more: • E2G circuit open
ENGINE SPD	Engine speed	-
VEHICLE SPD	Vehicle speed	Speed indicated on speedometer
COOLANT TEMP	Engine coolant temperature	If -40°C, sensor circuit open If 140°C or more, sensor circuit shorted
INTAKE AIR	Intake air temperature	If -40°C, sensor circuit open If 140°C or more, sensor circuit shorted
AIR-FUEL RATIO	Ratio compared to stoichiometric level	-
PURGE DENSITY	Learning value of purge density	-
EVAP PURGE FLOW	Ratio of evaporative purge flow to intake air volume	-
EVAP PURGE VSV	EVAP purge VSV duty ratio	-
KNOCK CRRT VAL	Correction learning value of knocking	-
KNOCK FB VAL	Feedback value of knocking	-

LABEL (Intelligent Tester Display)	Measure Item	Diagnostic Note
EVAP VAPOR PRES	EVAP vapor pressure	-
ACCEL POS #1	Absolute Accelerator Pedal Position (APP) No.1	-
ACCEL POS #2	Absolute APP No. 2	-
THROTTLE POS	Throttle sensor positioning	-
THROTTLE POS	Throttle position	-
THROTTLE POS #2	Throttle sensor positioning #2	-
THROTTLE MOT	Throttle motor	-
O2S B1 S2	Heated oxygen sensor output	Performing INJ VOL or A/F CONTROL function of ACTIVE TEST enables technician to check output voltage of sensor
AFS B1 S1	A/F sensor output	Performing INJ VOL or A/F CONTROL function of ACTIVE TEST enables technician to check output voltage of sensor
TOTAL FT #1	Total fuel trim	-
SHORT FT #1	Short-term fuel trim	Short-term fuel compensation used to maintain air-fuel ratio at stoichiometric air-fuel ratio
LONG FT #1	Long-term fuel trim	Overall fuel compensation carried out in long-term to compensate a continual deviation of short-term fuel trim from central valve
FUEL SYS #1	Fuel system status	• OL (Open Loop): Has not yet satisfied conditions to go closed loop • CL (Closed Loop): Using A/F sensor as feedback for fuel control • OL DRIVE: Open loop due to driving conditions (fuel enrichment) • OL FAULT: Open loop due to detected system fault • CL FAULT: Closed loop but A/F sensor, which used for fuel control malfunctioning
O2FT B1 S2	Fuel trim at heated oxygen sensor	-
AF FT B1 S1	Fuel trim at A/F sensor	-
AFS B1 S1	A/F sensor output current for sensor 1	Performing INJ VOL or A/F CONTROL function of ACTIVE TEST enables technician to check current output of sensor
CAT TEMP B1S1	Estimated catalyst temperature (sensor 1)	-
CAT TEMP B1S2	Estimated catalyst temperature (sensor 2)	-
S O2S B1 S2	Sub oxygen sensor impedance (sensor 2)	-
INI COOL TEMP	Engine coolant temperature at engine start	-
INI INTAKE TEMP	Intake air temperature at engine start	-
INJ VOL	Injection volume	-
ACC RELAY	ACC (Accessory) relay	-
STARTER RELAY	Starter relay (STA) signal	-
STARTER SIG	Starter switch (STSW) signal	-
STARTER CONTROL	Starter control (STAR) signal	-
PS SW	Power steering signal	-
PS SIGNAL	Power steering signal (history)	Signal status usually ON until ignition switch turned to OFF
CTP SW	Closed throttle position switch	-
A/C SIGNAL	A/C signal	-
PNP SW (NSW)	Park/Neutral Position (PNP) switch signal	-
ELECT LOAD SIG	Electrical load signal	-
STOP LIGHT SW	Stop light switch	-
BATTERY VOLTAGE	Battery voltage	-

LABEL (Intelligent Tester Display)	Measure Item	Diagnostic Note
EVAP (Purge) VSV	EVAP Purge VSV	-
FUEL PUMP/SPD	Fuel pump/speed status	-
VVT CTRL B1	VVT control status	-
VACUUM PUMP	Key-off EVAP system leak detection pump status	See page ES-317
EVAP VENT VAL	Key-off EVAP system vent valve status	-
FAN MOTOR	Electric fan motor	-
TC/TE1	TC and CG (TE1) terminals of DLC3	-
VVTL AIM ANGL#1	VVT aim angle	-
VVT CHNG ANGL#1	VVT angle	-
VVT OCV DUTY B1	VVT OCV operation duty	-
FC IDL	Fuel cut idle	ON: when throttle valve fully closed and engine speed over 3,500 rpm
FC TAU	Fuel cut during very light load	Fuel cut being performed under very light load to prevent engine combustion from becoming incomplete
IGNITION	Ignition counter	-
CYL #1	Cylinder #1 misfire	Only displayed during idling
CYL #2	Cylinder #2 misfire	Only displayed during idling
CYL #3	Cylinder #3 misfire	Only displayed during idling
CYL #4	Cylinder #4 misfire	Only displayed during idling
CYL ALL	All cylinders misfire	Only displayed during idling
MISFIRE RPM	Engine speed when misfire occurred	-
MISFIRE LOAD	Engine load when misfire occurred	-
MISFIRE MARGIN	Margin to detect engine misfire	-
ENG RUN TIME	Accumulated engine running time	-
TIME DTC CLEAR	Cumulative time after DTC cleared	-
DIST DTC CLEAR	Accumulated distance from DTC cleared	-
WU CYC DTC CLEAR	Warm-up cycle after DTC cleared	-

ES

CHECK MODE PROCEDURE

HINT:
Intelligent tester only:
Compared to normal mode, check mode is more sensitive to malfunctions. Therefore, check mode can detect the malfunctions that cannot be detected by normal mode.
NOTICE:
All the stored DTCs and freeze frame data are erased if: 1) the ECM is changed from normal mode to check mode or vice versa; or 2) the ignition switch is turned from ON to ACC or OFF while in check mode. Before changing modes, always check and make a note of any DTCs and freeze frame data.

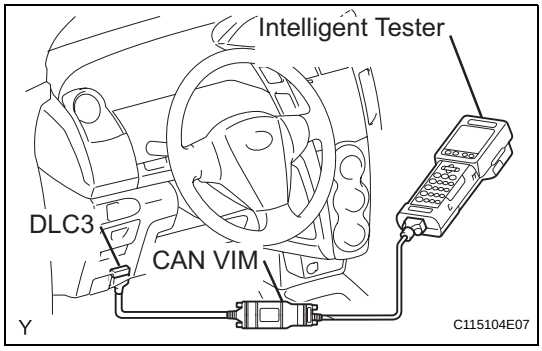

1. CHECK MODE PROCEDURE (Using an intelligent tester)

(a) Check and ensure the following conditions:
  (1) Battery positive voltage 11 V or more.
  (2) Throttle valve fully closed.
  (3) Transmission in the P or N positions.
  (4) A/C switch OFF.
(b) Turn the ignition switch to OFF.
(c) Connect the intelligent tester to the DLC3.
(d) Turn the ignition switch to ON.
(e) Turn the tester ON.
(f) Select the following menu items: DIAGNOSIS / ENHANCED OBD II / CHECK MODE.
(g) Switch the ECM from normal mode to check mode.

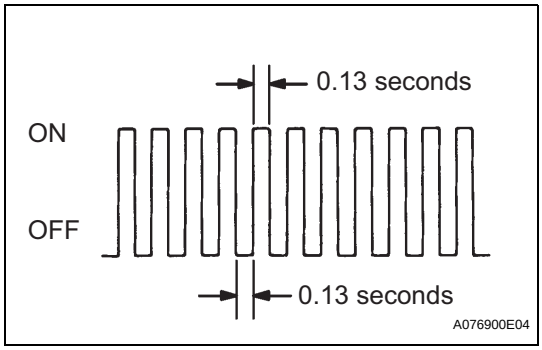

(h) Make sure the MIL flashes as shown in the illustration.
(i) Start the engine.
(j) Make sure the MIL turns off.
(k) Simulate the conditions of the malfunction described by the customer.
(l) Check DTCs and freeze frame data using the tester.

FAIL-SAFE CHART

If any of the following DTCs are set, the ECM enters fail-safe mode to allow the vehicle to be driven temporarily.

DTCs	Components	Fail-Safe Operations	Fail Safe Deactivation Conditions
P0031 and P0032	Air-Fuel Ratio (A/F) Sensor Heater	ECM turns off A/F sensor heater.	Ignition switch OFF
P0037 and P0038	Heated Oxygen (HO2) Sensor Heater	ECM turns off HO2 sensor heater.	Ignition switch OFF
P0100, P0102 and P0103	Mass Air Flow (MAF) Meter	ECM calculates ignition timing according to engine speed and throttle valve position.	Pass condition detected
P0110, P0112 and P0113	Intake Air Temperature (IAT) Sensor	ECM estimates IAT to be 20°C (68°F).	Pass condition detected
P0115, P0117 and P0118	Engine Coolant Temperature (ECT) Sensor	ECM estimates ECT to be 80°C (176°F).	Pass condition detected
P0120, P0121, P0122, P0123, P0220, P0222, P0223, P0604, P0606, P0607, P0657, P2102, P2103, P2111, P2112, P2118, P2119 and P2135	Electronic Throttle Control System (ETCS)	ECM cuts off throttle actuator current and throttle valve returned to 6° throttle position by return spring. ECM then adjusts engine output by controlling fuel injection (intermittent fuel-cut) and ignition timing in accordance with accelerator pedal opening angle to allow vehicle to continue at minimal speed*.	Pass condition detected and then ignition switch turned OFF
P0327 and P0328	Knock Sensor	ECM sets ignition timing to maximum retard.	Ignition switch OFF
P0351 to P0354	Igniter	ECM cuts fuel.	Pass condition detected
P2120, P2121, P2122, P2123, P2125, P2127, P2128 and P2138	Accelerator Pedal Position (APP) Sensor	APP sensor has 2 sensor circuits: Main and Sub. If either circuit malfunctions, ECM controls engine using other circuit. If both circuits malfunction, ECM regards accelerator pedal as being released. As result, throttle valve closed and engine idles.	Pass condition detected and then ignition switch turned OFF

*: The vehicle can be driven slowly when the accelerator pedal is depressed firmly and slowly. If the accelerator pedal is depressed quickly, the vehicle may speed up and slow down erratically.

ES

DATA LIST / ACTIVE TEST

1. DATA LIST

HINT:
By reading the DATA LIST displayed on an intelligent tester, values can be checked, including those of the switches, sensors, and actuators, without removing any parts. Reading the DATA LIST as the first step of troubleshooting is one method of shortening diagnostic time.

NOTICE:
In the table below, the values listed under Normal Condition are for reference only. Do not depend solely on these values when determining whether or not a part is faulty.

(a) Warm up the engine.
(b) Turn the ignition switch to OFF.
(c) Connect the intelligent tester to the DLC3.
(d) Turn the ignition switch to ON.
(e) Turn the tester ON.
(f) Select the following menu items: DIAGNOSIS / ENHANCED OBD II / DATA LIST.
(g) Check the values by referring to the table below.

Intelligent Tester Display	Measurement: Range (Display)	Normal Condition*1	Diagnostic Note
INJECTOR	Injection period of No. 1 cylinder: Min.: 0 ms, Max.: 32.64 ms	1.0 to 3.0 ms: Idling	-
IGN ADVANCE	Ignition timing advance for No. 1 cylinder: Min.: -64 deg, Max.: 63.5 deg	BTDC 0 to 14 deg: Idling	-
CALC LOAD	Calculated load by ECM: Min.: 0 %, Max.: 100 %	• 10 to 30 %: Idling • 10 to 30 %: Running without load at 2,500 rpm	-
VEHICLE LOAD	Vehicle load: Min.: 0 %, Max.: 25,700 %	Actual vehicle load	-
MAF	Air flow rate from Mass Air Flow (MAF) meter: Min.: 0 g/sec, Max.: 655.35 g/sec	1 to 3 g/sec: Idling 2 to 6 g/sec: Running without load at 2,500 rpm	If value approximately 0.0 g/sec: • MAF meter power source circuit open • VG circuit open or short If value 160.0 g/sec or more: • E2G circuit open
ENGINE SPD	Engine speed: Min.: 0 rpm, Max.: 16,383.75 rpm	• 550 to 650 rpm: Idling (M/T) • 650 to 750 rpm: Idling (A/T)	-
VEHICLE SPD	Vehicle speed: Min.: 0 km/h, Max.: 255 km/h	Actual vehicle speed	Speed indicated on speedometer
COOLANT TEMP	Engine coolant temperature: Min.: -40°C, Max.: 140°C	80 to 100°C (176 to 212°F): After warming up	• If -40°C (-40°F): sensor circuit open • If 140°C (284°F) or more: sensor circuit shorted
INTAKE AIR	Intake air temperature: Min.: -40°C, Max.: 140°C	Equivalent to ambient air temperature	• If -40°C (-40°F): sensor circuit open • If 140°C (284°F) or more: sensor circuit shorted
AIR-FUEL RATIO	Ratio compared to stoichiometric level: Min.: 0, Max.: 1.999	0.8 to 1.2: Idling	• Less than 1 (0 to 0.999) = Lean • Stoichiometric air-fuel ratio = 1 • Greater than 1 (1.001 to 1.999) = Rich
PURGE DENSITY	Learning value of purge density: Min.: -50, Max.: 350	-40 to 10: Idling	-

Intelligent Tester Display	Measurement: Range (Display)	Normal Condition*1	Diagnostic Note
EVAP PURGE FLOW	Ratio of evaporative purge flow to intake air volume: Min.: 0 %, Max.: 102.4 %	0 to 10 %: Idling	-
EVAP PURGE VSV	EVAP (PURGE) VSV control duty: Min.: 0 %, Max.: 100 %	10 to 50 %: Idling	Order signal from ECM
VAPOR PRES PUMP	Vapor pressure: Min.: 33.853 kPa, Max.: 125.596 kPa	Approximately 100 kPa: Ignition switch ON	EVAP system pressure monitored by canister pressure sensor
VAPOR PRES CALC	Vapor pressure (calculated): Min.: -5.632 kPa, Max.: 7,153.264 kPa	Approximately 100 kPa: Ignition switch ON	EVAP system pressure monitored by canister pressure sensor
KNOCK CRRT VAL	Knock correction learning value: Min: -64 °CA, Max.: 1,984 °CA	0 to 20°CA: Driving at 44 mph (70 km/h)	Service data
KNOCK FB VAL	Knock feedback value: Min: -64 °CA, Max.: 1,984 °CA	-20 to 0°CA: Driving at 44 mph (70 km/h)	Service data
CLUTCH	Clutch current: Min.: 0 A, Max.: 2.49 A	-	-
EVAP VAPOR PRES	EVAP vapor pressure: Min.: 0 kPa, Max.: 327.675 kPa	Approximately 100 kPa: Ignition switch ON	EVAP system pressure monitored by canister pressure sensor
ACCEL POS #1	Absolute Accelerator Pedal Position (APP) No. 1: Min.: 0 %, Max.: 100 %	10 to 22 %: Accelerator pedal released 52 to 90 %: Accelerator pedal fully depressed	Read value with ignition switch ON (Do not start engine)
ACCEL POS #2	Absolute APP No. 2: Min.: 0 %, Max.: 100 %	24 to 40 %: Accelerator pedal released 68 to 100 %: Accelerator pedal fully depressed	Read value with ignition switch ON (Do not start engine)
ACCEL POS #1	APP sensor No. 1 voltage: Min.: 0 V, Max.: 4.98 V	-	ETCS freeze data
ACCEL POS #2	APP sensor No. 2 voltage: Min.: 0 V, Max.: 4.98 V	-	ETCS freeze data
ACCEL POS #1	APP sensor No. 1 voltage: Min.: 0 V, Max.: 5 V	0.5 to 1.1 V: Accelerator pedal released 2.6 to 4.5 V: Accelerator pedal fully depressed	Read value with ignition switch ON (Do not start engine)
ACCEL POS #2	APP sensor No. 2 voltage: Min.: 0 V, Max.: 5 V	1.2 to 2.0 V: Accelerator pedal released 3.4 to 5.0 V: Accelerator pedal fully depressed	Read value with ignition switch ON (Do not start engine)
ACCEL IDL POS	Whether or not accelerator pedal position sensor detecting idle: ON or OFF	ON: Idling	-
THRTL LEARN VAL	Throttle valve fully closed (learned value): Min.: 0 V, Max.: 5 V	0.4 to 0.8 V	-
ACCEL SSR #1 AD	APP sensor No. 1 voltage (AD): Min.: 0 V, Max.: 4.98 V	-	ETCS service data
ACCEL LRN VAL#1	Accelerator fully closed learning value No. 1: Min.: 0 deg, Max.: 124.512 deg	-	ETCS service data
ACCEL LRN VAL#2	Accelerator fully closed learning value No. 2: Min.: 0 deg, Max.: 124.512 deg	-	ETCS service data
FAIL #1	Whether or not fail safe function executed: ON or OFF	ON: ETCS has failed	-
FAIL #2	Whether or not fail safe function executed: ON or OFF	ON: ETCS has failed	-
ST1	Brake pedal signal: ON or OFF	ON: Brake pedal depressed	-

ES

Intelligent Tester Display	Measurement: Range (Display)	Normal Condition*1	Diagnostic Note
SYS GUARD JUDGE	System guard: ON or OFF	-	ETCS service data
OPN MALFUNCTION	Open side malfunction: ON or OFF	-	ETCS service data
THROTTLE POS	Throttle position sensor: Min.: 0%, Max.: 100 %	• 10 to 22 %: Throttle fully closed • 66 to 98 %: Throttle fully open	• Calculated value based on VTA1 • Read value with ignition switch ON (Do not start engine)
THROTTL IDL POS	Whether or not throttle position sensor detecting idle: ON or OFF	ON: Idling	-
THRTL REQ POS	Throttle requirement position: Min.: 0 V, Max.: 5 V	0.5 to 1.0 V: Idling	-
THROTTLE POS	Throttle position: Min.: 0 %, Max.: 100 %	• 0 %: Throttle fully closed • 50 to 80 %: Throttle fully open	• Recognition value for throttle opening angle on ECM • Read value with ignition switch ON (Do not start engine)
THROTTLE POS #2	Throttle position No. 2 sensor: Min.: 0 %, Max.: 100 %	• 42 to 62 %: Throttle fully closed • 92 to 100 %: Throttle fully open	• Calculated value based on VTA2 • Read value with ignition switch ON (Do not start engine)
THROTTLE POS #1	Throttle position sensor No. 1 output voltage: Min.: 0 V, Max.: 4.98 V	-	ETCS freeze data
THROTTLE POS #2	Throttle position sensor No. 2 output voltage: Min.: 0 V, Max.: 4.98 V	-	ETCS freeze data
THROTTLE POS #1	Throttle position sensor No. 1 output voltage: Min.: 0 V, Max.: 5 V	• 0.5 to 1.1 V: Throttle fully closed • 3.3 to 4.9 V: Throttle fully open	Read value with ignition switch ON (Do not start engine)
THROTTLE POS #2	Throttle position sensor No. 2 output voltage: Min.: 0 V, Max.: 5 V	• 2.1 to 3.1 V: Throttle fully closed • 4.6 to 5.0 V: Throttle fully open	Read value with ignition switch ON (Do not start engine)
THRTL COMND VAL	Throttle position command value: Min.: 0 V, Max.: 4.9804 V	0.5 to 4.9 V	Read value with ignition switch ON (Do not start engine)
THROTTLE SSR #1	Throttle sensor opener position No. 1: Min.: 0 V, Max.: 4.9804 V	-	ETCS service data
THROTTLE SSR #2	Throttle sensor opener position No. 2: Min.: 0 V, Max.: 4.9804 V	-	ETCS service data
THRTL SSR #1 AD	Throttle position sensor No. 1 output voltage (AD): Min.: 0 V, Max.: 4.9804 V	0.5 to 4.9 V	Read value with ignition switch ON (Do not start engine)
THROTTLE MOT	Whether or not throttle actuator control permitted: ON or OFF	ON: Idling	Read value with ignition switch ON (Do not start engine)
THROTTLE MOT	Throttle actuator current: Min.: 0 A, Max.: 80 A	0 to 3.0 A: Idling	-
THROTTLE MOT	Throttle actuator: Min.: 0 %, Max.: 100 %	0.5 to 40 %: Idling	-
THROTTLE MOT	Throttle actuator current: Min.: 0 A, Max.: 19.92 A	0 to 3.0 A: Idling	-
THROTL OPN DUTY	Throttle actuator opening duty ratio: Min.: 0 %, Max.: 100 %	0 to 40 %: During idling	• When accelerator pedal depressed, duty ratio increased • Read value with ignition switch ON (Do not start engine)

Intelligent Tester Display	Measurement: Range (Display)	Normal Condition*1	Diagnostic Note
THROTL CLS DUTY	Throttle actuator closed duty ratio: Min.: 0 %, Max.: 100 %	0 to 40 %: During idling	• When accelerator pedal released quickly, duty ratio increased • Read value with ignition switch ON (Do not start engine)
THRTL MOT (OPN)	Throttle actuator duty ratio (open): Min.: 0 %, Max.: 100 %	0 to 40 %: During idling	ETCS service data
THRTL MOT (CLS)	Throttle actuator duty ratio (closed): Min.: 0 %, Max.: 100 %	0 to 40 %: During idling	ETCS service data
O2S B1 S2	Heated oxygen sensor output voltage for sensor 2: Min.: 0 V Max.: 1.275 V	0.1 to 0.9 V: Driving at 44 mph (70 km/h)	Performing INJ VOL or A/F CONTROL function of ACTIVE TEST enables technician to check output voltage of sensor
AFS B1 S1	A/F sensor output voltage for sensor 1: Min.: 0 V Max.: 7.999 V	2.8 to 3.8 V: Idling	Performing INJ VOL or A/F CONTROL function of ACTIVE TEST enables technician to check output voltage of sensor
TOTAL FT #1	Total fuel trim value for fuel system: Min.: -0.5, Max.: 0.496	-0.2 to 0.2	-
SHORT FT #1	Short-term fuel trim: Min.: -100 %, Max.: 99.2 %	-20 to 20 %	Short-term fuel compensation used to maintain air-fuel ratio at stoichiometric air-fuel ratio
LONG FT #1	Long-term fuel trim: Min.: -100 %, Max.: 99.2 %	-20 to 20 %	Overall fuel compensation carried out in long-term to compensate continual deviation of short-term fuel trim from central value
FUEL SYS #1	Fuel system status: OL or CL or OL DRIVE or OL FAULT or CL FAULT	CL: Idling after warming up	• OL (Open Loop): Has not yet satisfied conditions to go closed loop • CL (Closed Loop): Using A/F sensor as feedback for fuel control • OL DRIVE: Open loop due to driving conditions (fuel enrichment) • OL FAULT: Open loop due to detected system fault • CL FAULT: Closed loop but A/F sensor, which used for fuel control malfunctioning
O2FT B1 S2	Short-term fuel trim associated with sensor 2: Min.: -100 %, Max.: 99.2 %	-	-
AF FT B1 S1	Short-term fuel trim associated with sensor 1: Min.: 0, Max.: 1.999	• Value less than 1 (0.000 to 0.999) =Lean • Stoichiometric air-fuel ratio=1 • Value greater than 1 (1.001 to 1.999) = Rich	-
AFS B1 S1	A/F sensor output current for sensor 1: Min.: -128 mA, Max.: 127.99 mA	-	Performing INJ VOL or A/F CONTROL function of ACTIVE TEST enables technician to check current output of sensor
CAT TEMP B1S1	Estimated catalyst temperature (sensor 1): Min.: -40°C, Max.: 6,513.5°C	-	-
CAT TEMP B1S2	Estimated catalyst temperature (sensor 2): Min.: -40°C, Max.: 6,513.5°C	-	-

Intelligent Tester Display	Measurement: Range (Display)	Normal Condition*1	Diagnostic Note
S O2S B1 S2	Sub oxygen sensor impedance (sensor 2): Min.: 0 Ω, Max.: 21,247.68 Ω	5 to 15,000 Ω: While vehicle is driving and engine is warmed up	-
INI COOL TEMP	Engine coolant temperature at engine start: Min.: -40°C, Max.: 120°C	Close to ambient air temperature	-
INI INTAKE TEMP	Intake air temperature at engine start: Min.: -40°C, Max.: 120°C	Close to ambient air temperature	-
INJ VOL	Injection volume (Cylinder 1): Min.: 0 ml, Max.: 2.048 ml	0 to 0.15 ml: Idling	Quantity of fuel injection volume for 10 times
ACC RELAY	ACC (Accessory) relay: ON or OFF	ON: Cranking	-
STARTER RELAY	Starter relay (STA) signal: ON or OFF	ON: Cranking	-
STARTER SIG	Starter switch (STSW) signal: ON or OFF	ON: Cranking	-
STARTER CONTROL	Starter control (STAR) signal: ON or OFF	ON: Cranking	-
PS SW	Power steering signal: ON or OFF	ON: Power steering operation	-
PS SIGNAL	Power steering signal (history): ON or OFF	ON: When steering wheel first turned after battery terminals connected	Signal status usually ON until battery terminals disconnected
CTP SW	Closed throttle position switch: ON or OFF	• ON: Throttle fully closed • OFF: Throttle open	-
A/C SIGNAL	A/C signal: ON or OFF	ON: A/C ON	-
PNP SW [NSW]	PNP switch status: ON or OFF	ON: P or N position	-
ELECT LOAD SIG	Electrical load signal: ON or OFF	ON: Headlights or defogger turned ON	-
STOP LIGHT SW	Stop light switch: ON or OFF	ON: Brake pedal depressed	-
+BM	Whether or not electric throttle control system power inputted: ON or OFF	ON: Ignition switch ON and system normal	-
+BM VOLTAGE	+BM voltage: Min.: 0, Max.: 19.922	11 to 14 (V): Ignition switch ON and system normal	ETCS service data
BATTERY VOLTAGE	Battery voltage: Min.: 0 V, Max.: 65.535 V	11 to 14 V: Ignition switch ON	-
ACTUATOR POWER	Actuator power supply: ON or OFF	ON: Idling	ETCS service data
ATM PRESSURE	Atmospheric pressure: Min.: 0 kPa, Max.: 255 kPa	Approximately 100 kPa: Ignition switch ON	-
EVAP (Purge) VSV	Purge VSV status: ON or OFF	-	-
FUEL PUMP / SPD	Fuel pump status: ON or OFF	ON: Engine running	Active Test support data
VVT CTRL B1	VVT control (bank 1) status: ON or OFF	-	-
VACUUM PUMP	Key-off EVAP system leak detection pump status: ON or OFF	-	Active Test support data
EVAP VENT VAL	Key-off EVAP system vent valve status: ON or OFF	-	Active Test support data
FAN MOTOR	Electric fan motor: ON or OFF	ON: Electric fan motor operating	-

Intelligent Tester Display	Measurement: Range (Display)	Normal Condition*1	Diagnostic Note
TC/TE1	TC and CG (TE1) terminal of DLC3: ON or OFF	-	Active Test support data
VVTL AIM ANGL#1*2	VVT aim angle: Min.: 0 %, Max.: 100 %	0 to 100 %	VVT duty signal value during intrusive operation
VVT CHNG ANGL#1*2	VVT angle: Min.: 0°FR, Max.: 60°FR	0 to 56° FR	Displacement angle during intrusive operation
VVT OCV DUTY B1*2	VVT OCV operation duty: Min.: 0 %, Max.: 100 %	0 to 100 %	Requested duty value for intrusive operation
FC IDL	Fuel cut idle: ON or OFF	ON: Fuel cut operation	FC IDL = "ON" when throttle valve fully closed and engine speed over 3,500 rpm
FC TAU	Fuel cut TAU (Fuel cut during very light load): ON or OFF	ON: Fuel cut operating	Fuel cut being performed under very light load to prevent engine combustion from becoming incomplete
IGNITION	Ignition counter: Min.: 0, Max.: 400	0 to 400	-
CYL #1, #2, #3, #4	Misfire of cylinder 1 to 4: Min.: 0, Max.: 255	0	-
CYL ALL	All cylinders misfire: Min.: 0, Max.: 255	0	-
MISFIRE RPM	Engine speed when misfire occur: Min.: 0 rpm, Max.: 6,375 rpm	-	-
MISFIRE LOAD	Engine load when misfire occur: Min.: 0 g/rev, Max.: 3.98 g/rev	-	-
MISFIRE MARGIN	Margin to detect engine misfire: Min.: -100 %, Max.: 99.22 %	-100 to 99.22 %	Misfire detecting margin
#CODES	Number of detected DTCs: Min.: 0, Max.: 255	-	-
CHECK MODE	Check mode: ON or OFF	ON: Check mode ON	See page ES-37
SPD TEST	Check mode result for vehicle speed sensor: COMPL or INCMPL	-	-
MISFIRE TEST	Check mode result for misfire monitor: COMPL or INCMPL	-	-
OXS1 TEST	Check mode result for HO2 sensor: COMPL or INCMPL	-	-
A/F SSR TEST B1	Check mode result for air-fuel ratio sensor: COMPL or INCMPL	-	-
MIL	MIL status: ON or OFF	ON: MIL ON	-
MIL ON RUN DIST	MIL ON Run Distance: Min.: 0 km, Max.: 65,535 km	Distance after DTC detected	-
MIL ON RUN TIME	Running time from MIL ON: Min.: 0 minute, Max.: 65,535 minutes	Equivalent to running time after MIL ON	-
ENG RUN TIME	Engine run time: Min.: 0 second, Max.: 65,535 seconds	Time after engine start	-
TIME DTC CLEAR	Time after DTC cleared: Min.: 0 minute, Max.: 65,535 minutes	Equivalent to time after DTCs erased	-
DIST DTC CLEAR	Number of warm-up cycles after DTC cleared: Min.: 0 km, Max.: 65,535 km	Equivalent to drive distance after DTCs erased	-

Intelligent Tester Display	Measurement: Range (Display)	Normal Condition*1	Diagnostic Note
WU CYC DTC CLEAR	Warm-up cycle after DTC cleared: Min.: 0, Max.: 255	-	-
OBD CERT	OBD requirement	OBD2	-
#CARB CODES	Number of emission related DTCs	-	-
COMP MON	Comprehensive component monitor: NOT AVL or AVAIL	-	-
FUEL MON	Fuel system monitor: NOT AVL or AVAIL	-	-
MISFIRE MON	Misfire monitor: NOT AVL or AVAIL	-	-
O2S (A/FS) HTR	O2S (A/FS) heater monitor: NOT AVL or AVAIL	-	-
O2S (A/FS) HTR	O2S (A/FS) heater monitor: COMPL or INCMPL	-	-
O2S (A/FS) MON	O2S (A/FS) monitor: NOT AVL or AVAIL	-	-
O2S (A/FS) MON	O2S (A/FS) monitor: COMPL or INCMPL	-	-
EVAP MON	EVAP monitor: NOT AVL or AVAIL	-	-
EVAP MON	EVAP monitor: COMPL or INCMPL	-	-
CAT MON	Catalyst monitor: NOT AVL or AVAIL	-	-
CAT MON	Catalyst monitor: COMPL or INCMPL	-	-
CCM ENA	Comprehensive component monitor: UNABLE or ENABLE	-	-
CCM CMPL	Comprehensive component monitor: COMPL or INCMPL	-	-
FUEL ENA	Fuel system monitor: UNABLE or ENABLE	-	-
FUEL CMPL	Fuel system monitor: COMPL or INCMPL	-	-
MISFIRE ENA	Misfire monitor: UNABLE or ENABLE	-	-
MISFIRE CMPL	Misfire monitor: COMPL or INCMPL	-	-
HTR ENA	O2S (A/FS) heater monitor: UNABLE or ENABLE	-	-
HTR CMPL	O2S (A/FS) heater monitor: COMPL or INCMPL	-	-
O2S (A/FS) ENA	O2S (A/FS) monitor: UNABLE or ENABLE	-	-
O2S (A/FS) CMPL	O2S (A/FS) monitor: COMPL or INCMPL	-	-
EVAP ENA	EVAP monitor: UNABLE or ENABLE	-	-
EVAP CMPL	EVAP monitor: COMPL or INCMPL	-	-
CAT ENA	Catalyst monitor: UNABLE or ENABLE	-	-
CAT CMPL	Catalyst monitor: COMPL or INCMPL	-	-
MODEL CODE	Identifying model code	NCP9#	-

Intelligent Tester Display	Measurement: Range (Display)	Normal Condition*1	Diagnostic Note
ENGINE TYPE	Identifying engine type	1NZFE	-
CYLINDER NUMBER	Identifying cylinder number: Min.: 0, Max.: 255	4	-
TRANSMISSION	Identifying transmission type	MT or ECT (4AT)	-
DESTINATION	Identifying destination	A (America)	-
MODEL YEAR	Identifying model year: Min.: 1900, Max.: 2155	200#	-
SYSTEM	Identifying engine system	GASLIN (gasoline engine)	-

HINT:
- *1: If no idling conditions are specified, the transmission gear selector lever should be in the N or P position, and the A/C switch and all accessory switches should be OFF.
- *2: DATA LIST values are only displayed when performing the following ACTIVE TESTs: VVT B1. For other ACTIVE TESTs, the DATA LIST value will be 0.

2. ACTIVE TEST

HINT:
Performing an ACTIVE TEST enables components including the relays, VSV (Vacuum Switching Valve) and actuators, to be operated without removing any parts. The ACTIVE TEST can be performed with an intelligent tester. Performing an ACTIVE TEST as the first step of troubleshooting is one method of shortening diagnostic time.
DATA LIST can be displayed during ACTIVE TEST.

(a) Connect the intelligent tester to the DLC3.
(b) Turn the ignition switch to ON.
(c) Turn the tester ON.
(d) Select the following menu items: DIAGNOSIS / ENHANCED OBD II / ACTIVE TEST.
(e) Perform the ACTIVE TEST by referring to the table below.

Intelligent Tester Displays	Test Details	Control Ranges	Diagnostic Notes
INJ VOL	Change injection volume	Between -12.5 and 24.8 %	• All injectors tested at same time • Perform test at less than 3,000 rpm • Injection volume can be changed in 0.1 % graduations within control range
A/F CONTROL	Change injection volume	Decrease by 12.5 % or increase by 25 %	• Perform test at less than 3,000 rpm • A/F CONTROL enables checking and graphing of A/F (Air Fuel Ratio) sensor and Heated Oxygen (HO2) sensor voltage outputs • To conduct test, select following menu items: ACTIVE TEST / A/F CONTROL / USER DATA / AFS B1S1 and O2S B1S2, and press YES and ENTER followed by F4
EVAP VSV (ALONE)	Activate purge VSV control	ON/OFF	-
FUEL PUMP / SPD	Activate fuel pump (C/OPN Relay)	ON/OFF	Test possible when engine stopped

Intelligent Tester Displays	Test Details	Control Ranges	Diagnostic Notes
TC/TE1	Turn on and off TC and CG (TE1) connection	ON/OFF	• ON: TC and CG (TE1) connected • OFF: TC and CG (TE1) disconnected
FC IDL PROHBT	Prohibit idling fuel cut control	ON/OFF	-
COOLING FAN	Control Electric Cooling Fan	ON/OFF	-
STARTER	Starter	ON/OFF	Test possible when engine stopped
ACC CUT	Active ACC (Accessory) relay	ON/OFF	Test possible when engine stopped
ETCS OPEN SLOW	Throttle actuator	ON: Throttle valve opens slowly	Test possible when following conditions met: • Engine stopped • Shift position in P • Fully depressing accelerator pedal (APP: 59 degrees or more)
ETCS CLOSE SLOW	Throttle actuator	ON: Throttle valve closes slowly	
ETCS OPEN FAST	Throttle actuator	ON: Throttle valve opens fast	
ETCS CLOSE FAST	Throttle actuator	ON: Throttle valve closes fast	
VVT B1	Control VVT (bank 1)	-128 to 127 % This value added to present OCV control duty 100 %: Maximum advance -100 %: Maximum retard	Engine stall or rough idle when VVT actuator operated by 100 %. Test possible while vehicle stopped and engine idling
VVT CTRL B1	Turn on and off OCV (Oil Control Valve)	ON/OFF	• Engine stalls or idles roughly when OCV turned ON • Normal engine running or idling when OCV OFF • Test possible while vehicle stopped and engine idling
VACUUM PUMP	Leak detection pump	ON/OFF	-
VENT VALVE	Vent valve	ON/OFF	-
FUEL CUT #1	Cylinder #1 injector fuel cut	ON/OFF	Test possible during vehicle stopping and engine idling
FUEL CUT #2	Cylinder #2 injector fuel cut	ON/OFF	
FUEL CUT #3	Cylinder #3 injector fuel cut	ON/OFF	
FUEL CUT #4	Cylinder #4 injector fuel cut	ON/OFF	

3. SYSTEM CHECK

HINT:
Performing a SYSTEM CHECK enables the system, which consists of multiple actuators, to be operated without removing any parts. In addition, it can show whether or not any DTCs are set, and can detect potential malfunctions in the system. The SYSTEM CHECK can be performed with an intelligent tester.

(a) Connect the intelligent tester to the DLC3.
(b) Turn the ignition switch to ON
(c) Turn the tester ON.
(d) Select the following menu items: DIAGNOSIS / ENHANCED OBD II / SYSTEM CHECK.
(e) Perform the SYSTEM CHECK by referring to the table below.

Intelligent Tester Display	Test Detail	Recommended Fuel Temperature	Diagnostic Note
EVAP SYS CHECK (AUTO OPERATION)	Perform 5 steps in order to operate EVAP key-off monitor automatically	35°C (95°F) or less	• If no DTCs in PENDING CODE after performing this test, system functioning normally • Refer to EVAP system

Intelligent Tester Display	Test Detail	Recommended Fuel Temperature	Diagnostic Note
EVAP SYS CHECK (MANUAL OPERATION)	Perform 5 steps in order to operate EVAP key-off monitor manually	35°C (95°F) or less	• Used to detect malfunctioning parts • Refer to EVAP system

ES

DIAGNOSTIC TROUBLE CODE CHART

HINT:
- *1: MIL flashes when a catalyst damaging misfire is detected.
- *2: A/T denotes Automatic Transaxle models and M/T denotes Manual Transaxle models.
- *3: Only for vehicles except those with Mexico specifications.

DTC No.	Detection Item	Trouble Areas	MIL	Memory	See page
P0010	Camshaft Position "A" Actuator Circuit (Bank 1)	- Open or short in Oil Control Valve (OCV) circuit - OCV - ECM	Comes on	DTC stored	ES-56
P0011	Camshaft Position "A" - Timing Over-Advanced or System Performance (Bank 1)	- Valve timing - OCV - OCV filter - Camshaft timing gear assembly - ECM	Comes on	DTC stored	ES-60
P0012	Camshaft Position "A" - Timing Over-Retarded (Bank 1)	- Same as DTC P0011	Comes on	DTC stored	ES-60
P0016	Crankshaft Position - Camshaft Position Correlation (Bank 1 Sensor A)	- Mechanical system (Timing chain has jumped tooth or chain stretched) - ECM	Comes on	DTC stored	ES-66
P0031	Oxygen (A/F) Sensor Heater Control Circuit Low (Bank 1 Sensor 1)	- Open in Air-Fuel Ratio (A/F) sensor heater circuit - A/F sensor heater (sensor 1) - Integration relay (EFI relay) - ECM	Comes on	DTC stored	ES-68
P0032	Oxygen (A/F) Sensor Heater Control Circuit High (Bank 1 Sensor 1)	- Short in A/F sensor heater circuit - A/F sensor heater (sensor 1) - Integration relay (EFI relay) - ECM	Comes on	DTC stored	ES-68
P0037	Oxygen Sensor Heater Control Circuit Low (Bank 1 Sensor 2)	- Open in Heated Oxygen (HO2) sensor heater circuit - HO2 sensor heater (sensor 2) - Integration relay (EFI relay) - ECM	Comes on	DTC stored	ES-74
P0038	Oxygen Sensor Heater Control Circuit High (Bank 1 Sensor 2)	- Short in HO2 sensor heater circuit - HO2 sensor heater (sensor 2) - Integration relay (EFI relay) - ECM	Comes on	DTC stored	ES-74
P0100	Mass or Volume Air Flow Circuit	- Open or short in Mass Air Flow (MAF) meter circuit - MAF meter - ECM	Comes on	DTC stored	ES-80
P0101 *3	Mass Air Flow Circuit Range / Performance Problem	- MAF meter - Air induction system - PCV hose connections	Comes on	DTC stored	ES-87
P0102	Mass or Volume Air Flow Circuit Low Input	- Open or short in MAF meter circuit - MAF meter - ECM	Comes on	DTC stored	ES-80
P0103	Mass or Volume Air Flow Circuit High Input	- Open or short in MAF meter circuit - MAF meter - ECM	Comes on	DTC stored	ES-80
P0110	Intake Air Temperature Circuit Malfunction	- Open or short in Intake Air Temperature (IAT) sensor circuit - IAT sensor (built into MAF meter) - ECM	Comes on	DTC stored	ES-90
P0112	Intake Air Temperature Circuit Low Input	- Short in IAT sensor circuit - IAT sensor (built into MAF meter) - ECM	Comes on	DTC stored	ES-90

DTC No.	Detection Item	Trouble Areas	MIL	Memory	See page
P0113	Intake Air Temperature Circuit High Input	- Open in IAT sensor circuit - IAT sensor (built into MAF meter) - ECM	Comes on	DTC stored	ES-90
P0115	Engine Coolant Temperature Circuit Malfunction	- Open or short in Engine Coolant Temperature (ECT) sensor circuit - ECT sensor - ECM	Comes on	DTC stored	ES-95
P0116 *3	Engine Coolant Temperature Circuit Range / Performance Problem	- Thermostat - ECT sensor	Comes on	DTC stored	ES-101
P0117	Engine Coolant Temperature Circuit Low Input	- Short in ECT sensor circuit - ECT sensor - ECM	Comes on	DTC stored	ES-95
P0118	Engine Coolant Temperature Circuit High Input	- Open in ECT sensor circuit - ECT sensor - ECM	Comes on	DTC stored	ES-95
P0120	Throttle Pedal Position Sensor / Switch "A" Circuit Malfunction	- Throttle Position (TP) sensor (built into throttle body) - ECM	Comes on	DTC stored	ES-104
P0121	Throttle / Pedal Position Sensor / Switch "A" Circuit Range / Performance Problem	- TP sensor (built into throttle body)	Comes on	DTC stored	ES-111
P0122	Throttle / Pedal Position Sensor / Switch "A" Circuit Low Input	- TP sensor (built into throttle body) - Short in VTA1 circuit - Open in VC circuit - ECM	Comes on	DTC stored	ES-104
P0123	Throttle / Pedal Position Sensor / Switch "A" Circuit High Input	- TP sensor (built into throttle body) - Open in VTA1 circuit - Open in E2 circuit - Short between VC and VTA1 circuits - ECM	Comes on	DTC stored	ES-104
P0125	Insufficient Coolant Temperature for Closed Loop Fuel Control	- Cooling system - ECT sensor - Thermostat	Comes on	DTC stored	ES-113
P0128	Coolant Thermostat (Coolant Temperature Below Thermostat Regulating Temperature)	- Thermostat - Cooling system - ECT sensor - ECM	Comes on	DTC stored	ES-116
P0136	Oxygen Sensor Circuit Malfunction (Bank 1 Sensor 2)	- Open or short in HO2 sensor (sensor 2) circuit - HO2 sensor (sensor 2) - HO2 sensor heater (sensor 2) - Air-Fuel Ratio (A/F) sensor (sensor 1) - Integration relay (EFI relay) - Gas leakage from exhaust system	Comes on	DTC stored	ES-119
P0137	Oxygen Sensor Circuit Low Voltage (Bank 1 Sensor 2)	- Open in HO2 sensor (sensor 2) circuit - HO2 sensor (sensor 2) - HO2 sensor heater (sensor 2) - Integration relay (EFI relay) - Gas leakage from exhaust system	Comes on	DTC stored	ES-119
P0138	Oxygen Sensor Circuit High Voltage (Bank 1 Sensor 2)	- Short in HO2 sensor (sensor 2) circuit - HO2 sensor (sensor 2) - ECM internal circuit malfunction	Comes on	DTC stored	ES-119
P0141	Oxygen Sensor Heater Circuit Malfunction (Bank 1 Sensor 2)	- Open or short in HO2 sensor heater circuit - HO2 sensor heater (sensor 2) - Integration relay (EFI relay) - ECM	Comes on	DTC stored	ES-74

DTC No.	Detection Item	Trouble Areas	MIL	Memory	See page
P0171	System Too Lean (Bank 1)	- Air induction system - Injector blockage - MAF meter - ECT sensor - Fuel pressure - Gas leakage from exhaust system - Open or short in A/F sensor (sensor 1) circuit - A/F sensor (sensor 1) - A/F sensor heater (sensor 1) - Integration relay (EFI relay) - A/F sensor heater and EFI relay circuits - PCV hose connections - PCV valve and hose - ECM	Comes on	DTC stored	ES-136
P0172	System Too Rich (Bank 1)	- Injector leakage or blockage - MAF meter - ECT sensor - Ignition system - Fuel pressure - Gas leakage from exhaust system - Open or short in A/F sensor (sensor 1) circuit - A/F sensor (sensor 1) - A/F sensor heater (sensor 1) - Integration relay (EFI relay) - A/F sensor heater and EFI relay circuits - ECM	Comes on	DTC stored	ES-136
P0220	Throttle / Pedal Position Sensor / Switch "B" Circuit	- TP sensor (built into throttle body) - ECM	Comes on	DTC stored	ES-104
P0222	Throttle / Pedal Position Sensor / Switch "B" Circuit Low Input	- TP sensor (built into throttle body) - Short in VTA2 circuit - Open in VC circuit - ECM	Comes on	DTC stored	ES-104
P0223	Throttle / Pedal Position Sensor / Switch "B" Circuit High Input	- TP sensor (built into throttle body) - Open in VTA2 circuit - Open in E2 circuit - Short between VC and VTA2 circuits - ECM	Comes on	DTC stored	ES-104
P0300	Random / Multiple Cylinder Misfire Detected	- Open or short in engine wire harness - Connector connection - Vacuum hose connection - Ignition system - Injector - Fuel pressure - MAF meter - ECT sensor - Compression pressure - Valve clearance - Valve timing - PCV valve and hose - PCV hose connections - Air induction system - ECM	Comes on/ Blinks *1	DTC stored	ES-145
P0301	Cylinder 1 Misfire Detected	- Same as DTC P0300	Comes on/ Blinks *1	DTC stored	ES-145
P0302	Cylinder 2 Misfire Detected	- Same as DTC P0300	Comes on/ Blinks *1	DTC stored	ES-145
P0303	Cylinder 3 Misfire Detected	- Same as DTC P0300	Comes on/ Blinks *1	DTC stored	ES-145
P0304	Cylinder 4 Misfire Detected	- Same as DTC P0300	Comes on/ Blinks *1	DTC stored	ES-145
P0327	Knock Sensor 1 Circuit Low Input (Bank 1 or Single Sensor)	- Short in knock sensor circuit - Knock sensor - ECM	Comes on	DTC stored	ES-157

DTC No.	Detection Item	Trouble Areas	MIL	Memory	See page
P0328	Knock Sensor 1 Circuit High Input (Bank 1 or Single Sensor)	- Open in knock sensor circuit - Knock sensor - ECM	Comes on	DTC stored	ES-157
P0335	Crankshaft Position Sensor "A" Circuit	- Open or short in Crankshaft Position (CKP) sensor circuit - CKP sensor - CKP sensor plate - ECM	Comes on	DTC stored	ES-161
P0339	Crankshaft Position Sensor "A" Circuit Intermittent	- Same as DTC P0335	-	DTC stored	ES-161
P0340	Camshaft Position Sensor "A" Circuit (Bank 1 or Single Sensor)	- Open or short in Camshaft Position (CMP) sensor circuit - CMP sensor - Camshaft - Jumped tooth of timing chain - ECM	Comes on	DTC stored	ES-167
P0351	Ignition Coil "A" Primary / Secondary Circuit	- Ignition system - Open or short in IGF1 or IGT circuit (1 to 4) between ignition coil with igniter and ECM - No. 1 to No. 4 ignition coils with igniters - ECM	Comes on	DTC stored	ES-172
P0352	Ignition Coil "B" Primary / Secondary Circuit	- Same as DTC P0351	Comes on	DTC stored	ES-172
P0353	Ignition Coil "C" Primary / Secondary Circuit	- Same as DTC P0351	Comes on	DTC stored	ES-172
P0354	Ignition Coil "D" Primary / Secondary Circuit	- Same as DTC P0351	Comes on	DTC stored	ES-172
P0420	Catalyst System Efficiency Below Threshold (Bank 1)	- Front exhaust pipe (with Three-Way Catalytic Converter) - Gas leakage from exhaust system - A/F sensor (sensor 1) - HO2 sensor (sensor 2)	Comes on	DTC stored	ES-180
P043E *3	Evaporative Emission System Reference Orifice Clog Up	- Canister pump module (Reference orifice, leak detection pump, vent valve) - Connector/wire harness (Canister pump module - ECM) - EVAP system hose (pipe from air inlet port to canister pump module, canister filter, fuel tank vent hose) - ECM	Comes on	DTC stored	ES-187
P043F *3	Evaporative Emission System Reference Orifice High Flow	- Same as DTC P043E	Comes on	DTC stored	ES-187
P0441 *3	Evaporative Emission Control System Incorrect Purge Flow	- Purge VSV - Connector/wire harness (Purge VSV - ECM) - Canister pump module - Leakage from EVAP system - Leakage from EVAP line (Purge VSV - Intake manifold) - ECM	Comes on	DTC stored	ES-192
P0450 *3	Evaporative Emission Control System Pressure Sensor / Switch	- Canister pump module - EVAP system hose (pipe from air inlet port to canister pump module, canister filter, fuel tank vent hose) - ECM	Comes on	DTC stored	ES-199
P0451 *3	Evaporative Emission Control System Pressure Sensor Range / Performance	- Canister pump module - Connector/wire harness (Canister pump module - ECM) - EVAP system hose (pipe from air inlet port to canister pump module, canister filter, fuel tank vent hose) - ECM	Comes on	DTC stored	ES-199

DTC No.	Detection Item	Trouble Areas	MIL	Memory	See page
P0452 *3	Evaporative Emission Control System Pressure Sensor / Switch Low Input	- Same as DTC P0451	Comes on	DTC stored	ES-199
P0453 *3	Evaporative Emission Control System Pressure Sensor / Switch High Input	- Same as DTC P0451	Comes on	DTC stored	ES-199
P0455 *3	Evaporative Emission Control System Leak Detected (Gross Leak)	- Fuel cap (loose) - Leakage from EVAP line (Canister - Fuel tank) - Leakage from EVAP line (Purge VSV - Canister) - Canister pump module - Leakage from fuel tank - Leakage from canister	Comes on	DTC stored	ES-209
P0456 *3	Evaporative Emission Control System Leak Detected (Very Small Leak)	- Same as DTC P0455	Comes on	DTC stored	ES-209
P0500	Vehicle Speed Sensor "A"	- Open or short in speed signal circuit - Vehicle speed sensor - Combination meter - ECM - Skid control ECU	Comes on	DTC stored	ES-213
P0504	Brake Switch "A" / "B" Correlation	- Short in stop light switch signal circuit - STOP fuse - IGN fuse - Stop light switch - ECM	-	DTC stored	ES-218
P0505	Idle Control System Malfunction	- ETCS (Electronic Throttle Control System) - Air induction system - PCV hose connections - ECM	Comes on	DTC stored	ES-222
P050A *3	Cold Start Idle Air Control System Performance	- Throttle body assembly - MAF meter - Air induction system - PCV hose connections - VVT system - Air cleaner filter element - ECM	Comes on	DTC stored	ES-226
P050B *3	Cold Start Ignition Timing Performance	- Same as DTC P050A	Comes on	DTC stored	ES-226
P0560	System Voltage	- Open in back up power source circuit - Battery - Battery terminals - EFI fuse - ECM	Comes on	DTC stored	ES-232
P0604	Internal Control Module Random Access Memory (RAM) Error	- ECM	Comes on	DTC stored	ES-236
P0606	ECM / PCM Processor	- ECM	Comes on	DTC stored	ES-236
P0607	Control Module Performance	- ECM	Comes on	DTC stored	ES-236
P0617	Starter Relay Circuit High	- Park/Neutral Position (PNP) switch (A/T *2) - Clutch start switch (M/T *2) - Starter relay circuit - Ignition switch - ECM	Comes on	DTC stored	ES-238
P0630 *3	VIN not Programmed or Mismatch - ECM / PCM	- ECM	Comes on	DTC stored	ES-244
P0657	Actuator Supply Voltage Circuit / Open	- ECM	Comes on	DTC stored	ES-236
P0724	Brake Switch "B" Circuit High	- Short in stop light switch signal circuit - Stop light switch - ECM	Comes on	DTC stored	ES-246

DTC No.	Detection Item	Trouble Areas	MIL	Memory	See page
P2102	Throttle Actuator Control Motor Circuit Low	- Open in throttle actuator circuit - Throttle actuator - ECM	Comes on	DTC stored	ES-249
P2103	Throttle Actuator Control Motor Circuit High	- Short in throttle actuator circuit - Throttle actuator - Throttle valve - Throttle body assembly - ECM	Comes on	DTC stored	ES-249
P2111	Throttle Actuator Control System - Stuck Open	- Throttle actuator - Throttle body assembly - Throttle valve	Comes on	DTC stored	ES-253
P2112	Throttle Actuator Control System - Stuck Closed	- Same as DTC P2111	Comes on	DTC stored	ES-253
P2118	Throttle Actuator Control Motor Current Range / Performance	- Open in ETCS power source circuit - Battery - Battery terminals - ETCS fuse - ECM	Comes on	DTC stored	ES-256
P2119	Throttle Actuator Control Throttle Body Range / Performance	- ETCS - ECM	Comes on	DTC stored	ES-263
P2120	Throttle / Pedal Position Sensor / Switch "D" Circuit	- Accelerator Pedal Position (APP) sensor - ECM	Comes on	DTC stored	ES-266
P2121	Throttle / Pedal Position Sensor / Switch "D" Circuit Range / Performance	- APP sensor - ECM	Comes on	DTC stored	ES-273
P2122	Throttle / Pedal Position Sensor / Switch "D" Circuit Low Input	- APP sensor - Open in VCP1 circuit - Open or ground short in VPA circuit - ECM	Comes on	DTC stored	ES-266
P2123	Throttle / Pedal Position Sensor / Switch "D" Circuit High Input	- APP sensor - Open in EPA circuit - ECM	Comes on	DTC stored	ES-266
P2125	Throttle / Pedal Position Sensor / Switch "E" Circuit	- APP sensor - ECM	Comes on	DTC stored	ES-266
P2127	Throttle / Pedal Position Sensor / Switch "E" Circuit Low Input	- APP sensor - Open in VCP2 circuit - Open or ground short in VPA2 circuit - ECM	Comes on	DTC stored	ES-266
P2128	Throttle / Pedal Position Sensor / Switch "E" Circuit High Input	- APP sensor - Open in EPA2 circuit - ECM	Comes on	DTC stored	ES-266
P2135	Throttle / Pedal Position Sensor / Switch "A" / "B" Voltage Correlation	- Short between VTA1 and VTA2 circuits - TP sensor (built into throttle body) - ECM	Comes on	DTC stored	ES-104
P2138	Throttle / Pedal Position Sensor / Switch "D" / "E" Voltage Correlation	- Short between VPA and VPA2 circuits - APP sensor - ECM	Comes on	DTC stored	ES-266
P2195 *3	Oxygen (A/F) Sensor Signal Stuck Lean (Bank 1 Sensor 1)	- Open or short in A/F sensor (sensor 1) circuit - A/F sensor (sensor 1) - A/F sensor heater (sensor 1) - Integration relay (EFI relay) - A/F sensor heater and EFI relay circuits - ECM	Comes on	DTC stored	ES-276
P2196 *3	Oxygen (A/F) Sensor Signal Stuck Rich (Bank 1 Sensor 1)	- Same as DTC P2195	Comes on	DTC stored	ES-276
P2238	Oxygen (A/F) Sensor Pumping Current Circuit Low (Bank 1 Sensor 1)	- Open or short in A/F sensor (sensor 1) circuit - A/F sensor (sensor 1) - A/F sensor heater (sensor 1) - Integration relay (EFI relay) - A/F sensor heater and EFI relay circuits - ECM	Comes on	DTC stored	ES-290

DTC No.	Detection Item	Trouble Areas	MIL	Memory	See page
P2239	Oxygen (A/F) Sensor Pumping Current Circuit High (Bank 1 Sensor 1)	- Same as DTC P2238	Comes on	DTC stored	ES-290
P2252	Oxygen (A/F) Sensor Reference Ground Circuit Low (Bank 1 Sensor 1)	- Same as DTC P2238	Comes on	DTC stored	ES-290
P2253	Oxygen (A/F) Sensor Reference Ground Circuit High (Bank 1 Sensor 1)	- Same as DTC P2238	Comes on	DTC stored	ES-290
P2401 *3	Evaporative Emission Leak Detection Pump Stuck OFF	- Canister pump module (Reference orifice, leak detection pump, vent valve) - Connector/wire harness (Canister pump module - ECM) - EVAP system hose (pipe from air inlet port to canister pump module, canister filter, fuel tank vent hose) - ECM	Comes on	DTC stored	ES-296
P2402 *3	Evaporative Emission Leak Detection Pump Stuck ON	- Same as DTC P2401	Comes on	DTC stored	ES-296
P2419 *3	Evaporative Emission System Switching Valve Control Circuit Low	- Canister pump module (Reference orifice, leak detection pump, vent valve) - Connector/wire harness (Canister pump module - ECM) - EVAP system hose (pipe from air inlet port to canister pump module, canister filter, fuel tank vent hose) - ECM	Comes on	DTC stored	ES-302
P2420 *3	Evaporative Emission System Switching Valve Control Circuit High	- Canister pump module (Reference orifice, leak detection pump, vent valve) - Connector/wire harness (Canister pump module - ECM) - ECM	Comes on	DTC stored	ES-302
P2610 *3	ECM / PCM Internal Engine Off Timer Performance	- ECM	Comes on	DTC stored	ES-308
P2A00 *3	A/F Sensor Circuit Slow Response (Bank 1 Sensor 1)	- Open or short in A/F sensor circuit - A/F sensor - ECM	Comes on	DTC stored	ES-310

DTC	P0010	Camshaft Position "A" Actuator Circuit (Bank 1)

HINT:
This DTC relates to the Oil Control Valve (OCV).

DESCRIPTION

This DTC is designed to detect opens or shorts in the camshaft oil control valve (OCV) circuit. If the OCV's duty-cycle is excessively high or low while the engine running, the ECM will illuminate the MIL and set the DTC.
The VVT (variable valve timing) system adjusts the intake valve timing to improve the driveability. The engine oil pressure turns the camshaft actuator to adjust the valve timing. The OCV is a solenoid valve and switches the engine oil line. The valve moves when the ECM applies the 12volts to the solenoid. The ECM changes the energizing time to the solenoid (duty-cycle) in accordance with the camshaft position, crankshaft position,, throttle position etc.

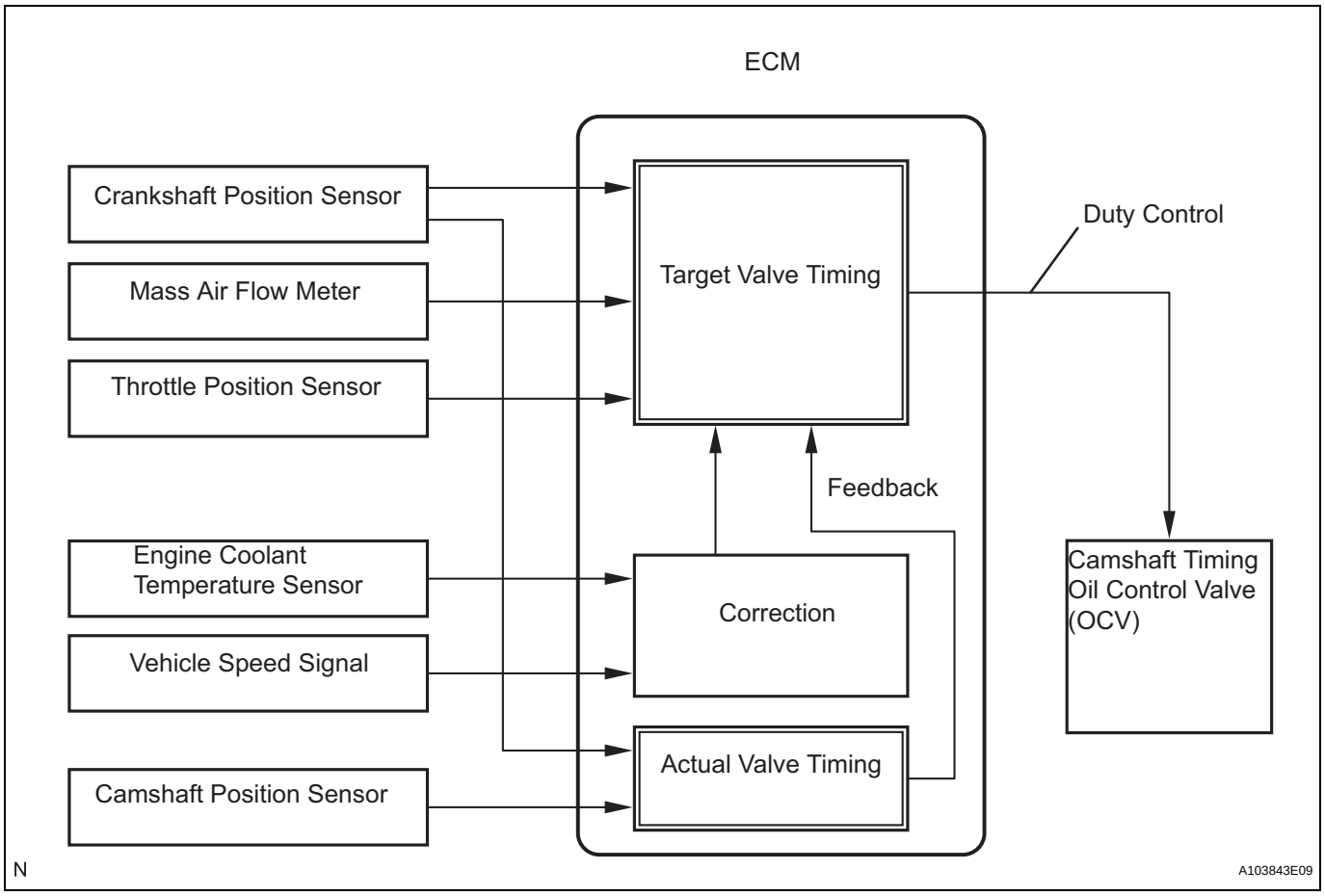

DTC No.	DTC Detection Conditions	Trouble Areas
P0010	Open or short in OCV circuit (1 trip detection logic)	• Open or short in OCV circuit • OCV • ECM

MONITOR DESCRIPTION

This DTC is designed to detect opens or shorts in the camshaft oil control valve (OCV) circuit. If the OCV's duty-cycle is excessively high or low while the engine running, the ECM will illuminate the MIL and set the DTC.

MONITOR STRATEGY

Related DTCs	P0010: VVT OCV range check
Required Sensors/Components (Main)	VVT OCV
Required Sensors/Components (Related)	-
Frequency of Operation	Continuous
Duration	1 second
MIL Operation	Immediate
Sequence of Operation	None

TYPICAL ENABLING CONDITIONS

Monitor runs whenever following DTCs not present	None
Engine	Running

TYPICAL MALFUNCTION THRESHOLDS

OCV duty-cycle	3 % or less
	100 %

COMPONENT OPERATING RANGE

OCV duty-cycle	4 to 100 % when engine running

WIRING DIAGRAM

INSPECTION PROCEDURE

HINT:
Read freeze frame data using an intelligent tester. Freeze frame data record the engine condition when malfunctions are detected. When troubleshooting, freeze frame data can help determine if the vehicle was moving or stationary, if the engine was warmed up or not, if the air-fuel ratio was lean or rich, and other data, from the time the malfunction occurred.

1	CHECK DTC (OPERATE OCV)

(a) Connect an intelligent tester to the DLC3.

(b) Turn the ignition switch to ON and turn the tester ON.
(c) Clear DTCs after recording the freeze frame data and DTCs.
(d) Start the engine.
(e) Allow the engine to idle and check for DTCs.
(f) Check that P0010 is present.
OK:
P0010 is present.

NG → **CHECK FOR INTERMITTENT PROBLEMS**

OK

2 INSPECT CAMSHAFT TIMING OIL CONTROL VALVE ASSEMBLY

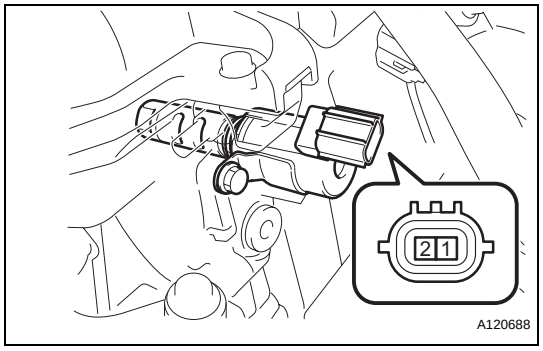

(a) Disconnect the C24 OCV connector.
(b) Measure the resistance between the terminals of the OCV.
Standard resistance:
6.9 to 7.9 Ω at 20°C (68°F)
(c) Reconnect the OCV connector.

NG → **REPLACE CAMSHAFT TIMING OIL CONTROL VALVE ASSEMBLY**

OK

3 CHECK HARNESS AND CONNECTOR (OCV - ECM)

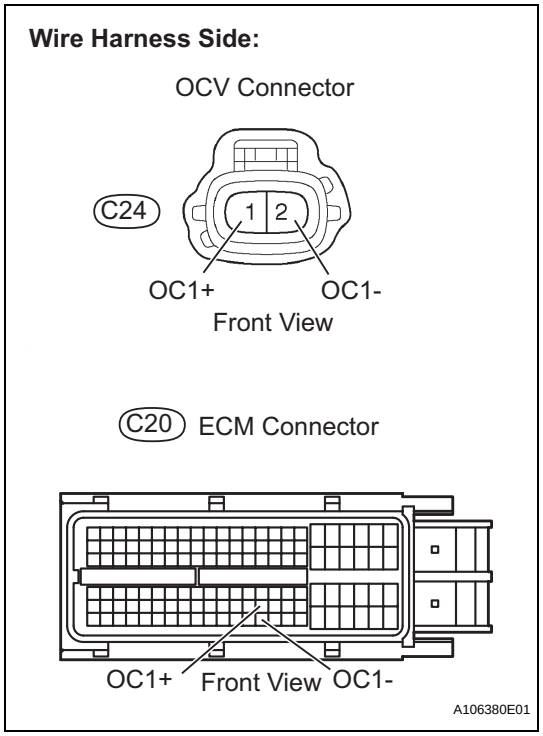

(a) Disconnect the C24 OCV connector.
(b) Disconnect the C20 ECM connector.
(c) Check the resistance.
Standard resistance (check for open)

Tester Connections	Specified Conditions
OC1+ (C24-1) - OC1+ (C20-100)	Below 1 Ω
OC1- (C24-2) - OC1- (C20-123)	

Standard resistance (check for short)

Tester Connections	Specified Conditions
OC1+ (C24-1) or OC1+ (C20-100) - Body ground	10 kΩ or higher
OC1- (C24-2) or OC1- (C20-123) - Body ground	

(d) Reconnect the OCV connector.
(e) Reconnect the ECM connector.

NG → **REPAIR OR REPLACE HARNESS OR CONNECTOR**

OK

REPLACE ECM

DTC	P0011	Camshaft Position "A" - Timing Over-Advanced or System Performance (Bank 1)

DTC	P0012	Camshaft Position "A" - Timing Over-Retarded (Bank 1)

HINT:
If DTC P0011 or P0012 is present, check the VVT (Variable Valve Timing) system.

DESCRIPTION

ES

The VVT system includes the ECM, Oil Control Valve (OCV) and VVT controller. The ECM sends a target duty-cycle control signal to the OCV. This control signal regulates the oil pressure supplied to the VVT controller. Camshaft timing control is performed according to engine operating conditions such as the intake air volume, throttle valve position and engine coolant temperature. The ECM controls the OCV, based on the signals transmitted by several sensors. The VVT controller regulates the intake camshaft angle using oil pressure through the OCV. As a result, the relative positions of the camshaft and crankshaft are optimized, the engine torque and fuel economy improve, and the exhaust emissions decrease under overall driving conditions. The ECM detects the actual intake valve timing using signals from the camshaft and crankshaft position sensors, and performs feedback control. This is how the target intake valve timing is verified by the ECM.

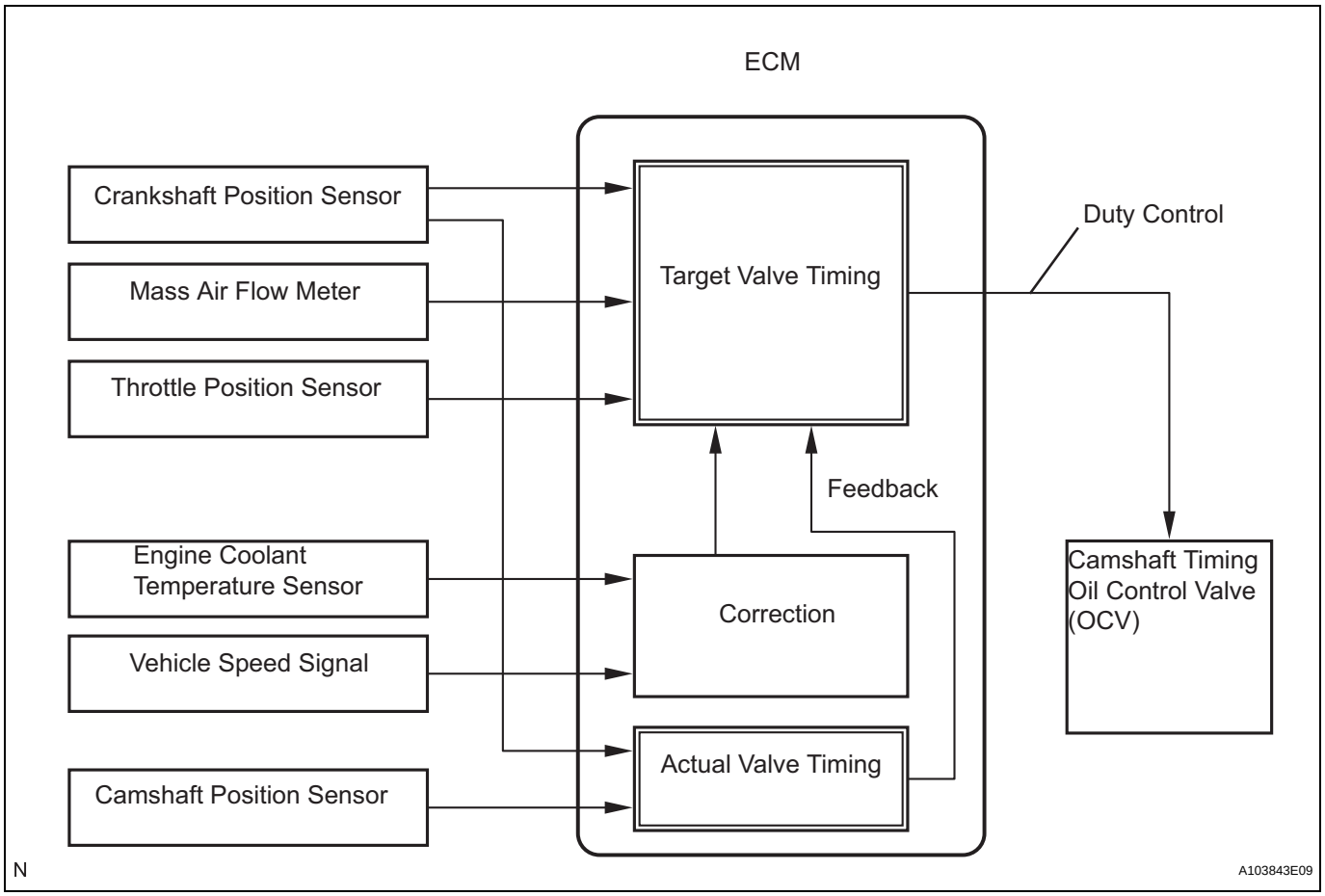

DTC No.	DTC Detection Conditions	Trouble Areas
P0011	Advanced camshaft timing: With warm engine and engine speed of between 450 rpm and 4,000 rpm, all conditions (1), (2) and (3) met (1 trip detection logic): 1. Difference between target and actual intake valve timings more than 5°CA (Crankshaft Angle) for 4.5 seconds 2. Current intake valve timing fixed (timing changes less than 5°CA in 5 seconds) 3. Variations in VVT controller timing more than 19°CA of maximum delayed timing (malfunction in advance timing)	• Valve timing • OCV • OCV filter • Camshaft timing gear assembly • ECM
P0012	Retarded camshaft timing: With warm engine and engine speed of between 450 rpm and 4,000 rpm, all conditions (1), (2) and (3) met (2 trip detection logic): 1. Difference between target and actual intake valve timings more than 5°CA (Crankshaft Angle) for 4.5 seconds 2. Current intake valve timing fixed (timing changes less than 5°CA in 5 seconds) 3. Variations in VVT controller timing 19°CA or less of maximum delayed timing (malfunction in retarded timing)	• Valve timing • OCV • OCV filter • Camshaft timing gear assembly • ECM

ES

MONITOR DESCRIPTION

The ECM optimizes the intake valve timing using the VVT (Variable Valve Timing) system to control the intake camshaft. The VVT system includes the ECM, the Oil Control Valve (OCV) and the VVT controller. The ECM sends a target duty-cycle control signal to the OCV. This control signal regulates the oil pressure supplied to the VVT controller. The VVT controller can advance or retard the intake camshaft. If the difference between the target and actual intake valve timings is large, and changes in the actual intake valve timing are small, the ECM interprets this as the VVT controller stuck malfunction and sets a DTC.

Example:

A DTC is set when the following conditions 1, 2 and 3 are met:

1. The difference between the target and actual intake valve timing is more than 5°CA (Crankshaft Angle) and the condition continues for more than 4.5 seconds.
2. It takes 5 seconds or more to change the valve timing by 5°CA.
3. After above conditions 1 and 2 are met, the OCV is forcibly activated 63 times or more.

DTC P0011 (Advanced Cam Timing) is subject to 1 trip detection logic.

DTC P0012 (Retarded Cam Timing) is subject to 2 trip detection logic.

These DTCs indicate that the VVT controller cannot operate properly due to OCV malfunctions or the presence of foreign objects in the OCV.

The monitor will run if all of the following conditions are met:

– The engine is warm (the engine coolant temperature is 75°C [167°F] or more).
– The vehicle has been driven at more than 40 mph (64 km/h) for 3 minutes.
– The engine has idled for 3 minutes.

MONITOR STRATEGY

Related DTCs	P0011: Advanced camshaft timing P0012: Retarded camshaft timing
Required Sensors/Components (Main)	VVT OCV and VVT Actuator
Required Sensors/Components (Related)	Crankshaft position sensor, camshaft position sensor and Engine coolant temperature sensor
Frequency of Operation	Once per driving cycle
Duration	Within 10 seconds
MIL Operation	Advanced camshaft timing: Immediate Retarded camshaft timing: 2 driving cycles
Sequence of Operation	None

TYPICAL ENABLING CONDITIONS

Monitor runs whenever following DTCs not present	P0100 - P0103 (MAF meter) P0115 - P0118 (ECT sensor) P0125 (Insufficient ECT for closed loop) P0335 (CKP sensor) P0340 (CMP sensor) P0351 - P0354 (Igniter)
Battery voltage	11 V or more
Engine RPM	450 to 4,000 rpm
ECT	75°C (167°F) to 100°C (212°F)

TYPICAL MALFUNCTION THRESHOLDS

ES

All of following conditions met	-
Deviation of valve timing	More than 5°CA (Crankshaft Angle)
Valve timing	No change

If the difference between the target and actual camshaft timings is greater than the specified value, the ECM operates the VVT actuator.
Then, the ECM monitor the camshaft timing change for 5 seconds.

WIRING DIAGRAM

Refer to DTC P0010 (See page ES-57).

INSPECTION PROCEDURE

NOTICE:
DTC P0011 or P0012 may be set when foreign objects in the engine oil are caught in some parts of the system. The DTC will remain set even if the system returns to normal after a short time. Foreign objects are filtered out by the oil filter.
HINT:
Read freeze frame data using an intelligent tester. Freeze frame data record the engine condition when malfunctions are detected. When troubleshooting, freeze frame data can help determine if the vehicle was moving or stationary, if the engine was warmed up or not, if the air-fuel ratio was lean or rich, and other data, from the time the malfunction occurred.

1	CHECK ANY OTHER DTCS OUTPUT (IN ADDITION TO DTC P0011 OR P0012)

(a) Connect an intelligent tester to the DLC3.
(b) Turn the ignition switch to ON and turn the tester ON.
(c) Select the following menu items: DIAGNOSIS / ENHANCED OBD II / DTC INFO / CURRENT CODES.
(d) Read DTCs.

Result

Display (DTC Output)	Proceed To
P0011 or P0012	A
P0011 or P0012 and other DTCs	B

HINT:
If any DTCs other than P0011 or P0012 are output, troubleshoot those DTCs first.

B → **GO TO DTC CHART**

A

2	PERFORM ACTIVE TEST USING INTELLIGENT TESTER (OPERATE OCV)

(a) Connect the intelligent tester to the DLC3.
(b) Start the engine and turn the tester ON.
(c) Warm up the engine.
(d) On the tester, select the following menu items: DIAGNOSIS / ENHANCED OBD II / ACTIVE TEST / VVT CTRL B1.
(e) Check the engine speed while operating the Oil Control Valve (OCV) using the tester.

ES

OK

Tester Operations	Specified Conditions
OCV OFF	Normal engine speed
OCV ON	Engine idles roughly or stalls (soon after OCV switched from OFF to ON)

NG → **Go to step 4**

OK

3	CHECK WHETHER DTC OUTPUT RECURS (DTC P0011 OR P0012)

(a) Connect the intelligent tester to the DLC3.
(b) Turn the ignition switch to ON and turn the tester ON.
(c) Clear DTCs (See page ES-34).
(d) Start the engine and warm it up.
(e) Switch the ECM from normal mode to check mode using the tester.
(f) Drive the vehicle for more than 10 minutes.
(g) Read DTCs using the tester.
OK:
No DTC output.

NG → **Go to step 4**

OK

END

4 CHECK VALVE TIMING (CHECK FOR LOOSE AND JUMPED TEETH ON TIMING CHAIN)

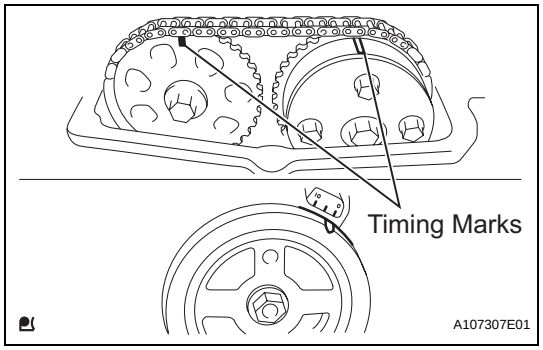

(a) Remove the cylinder head cover.
(b) Turn the crankshaft pulley, and align its groove with the timing mark "0" on the timing chain cover.
(c) Check that the timing marks on the camshaft timing sprocket and camshaft timing gear are facing upward as shown in the illustration.
If not, turn the crankshaft 1 revolution (360°), then align the marks as above.
OK:
Timing marks on camshaft timing gears are aligned as shown in the illustration.
(d) Reinstall the cylinder head cover.

NG → **ADJUST VALVE TIMING**

OK

5 INSPECT CAMSHAFT TIMING OIL CONTROL VALVE ASSEMBLY (OCV)

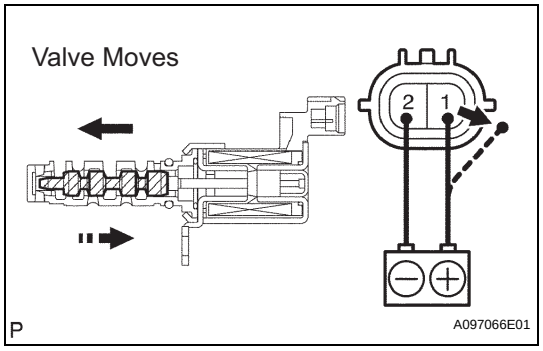

(a) Remove the OCV.
(b) Measure the resistance between the terminals of the OCV.
Standard resistance:
6.9 to 7.9 Ω at 20°C (68°F)
(c) Apply the positive battery voltage to terminal 1 and negative battery voltage to terminal 2. Check the valve operation.
OK:
Valve moves quickly.
(d) Reinstall the OCV.

NG → **REPLACE CAMSHAFT TIMING OIL CONTROL VALVE ASSEMBLY**

OK

6 INSPECT OIL CONTROL VALVE FILTER

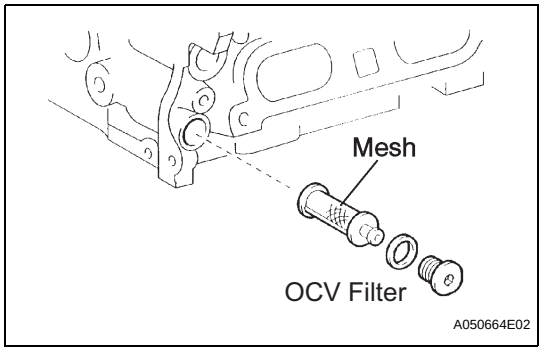

(a) Remove the generator.
(b) Remove the OCV filter.
(c) Check that the filter is not clogged.
OK:
Filter is not clogged.
(d) Reinstall the OCV filter.
(e) Reinstall the generator.

NG → **CLEAN OIL CONTROL VALVE FILTER**

OK

7	REPLACE CAMSHAFT TIMING GEAR ASSEMBLY

NEXT

8	CHECK WHETHER DTC OUTPUT RECURS

ES

(a) Connect the intelligent tester to the DLC3.
(b) Turn the ignition switch to ON and turn the tester ON.
(c) Clear DTCs (See page ES-34).
(d) Start the engine and warm it up.
(e) Switch the ECM from normal mode to check mode using the tester.
(f) Driver the vehicle for more than 10 minutes.
(g) Read output DTCs using the tester.
Standard:
No DTC output.
HINT:
DTC P0011 or P0012 is output when foreign objects in engine oil are caught in some parts of the system. These codes will stay registered even if the system returns to normal after a short time. These foreign objects are then captured by the oil filter, thus eliminating the source of the problem.

OK → **SYSTEM OK**

NG

REPLACE ECM

DTC	P0016	Crankshaft Position - Camshaft Position Correlation (Bank 1 Sensor A)

DESCRIPTION

In the VVT (Variable Valve Timing) system, the appropriate intake valve open and close timing is controlled by the ECM. The ECM performs intake valve control by performing the following: 1) controlling the camshaft and camshaft timing oil control valve, and operating the camshaft timing gear; and 2) changing the relative positions of the gaps between the camshaft and crankshaft.

DTC No.	DTC Detection Conditions	Trouble Areas
P0016	Deviation in crankshaft and camshaft position sensor signals (2 trip detection logic)	• Mechanical system (Timing chain has jumped tooth or chain stretched) • ECM

ES

MONITOR DESCRIPTION

The ECM optimizes the valve timing by using the VVT (Variable Valve Timing) system to control the intake camshaft. The VVT system includes the ECM, the Oil Control Valve (OCV) and the VVT controller.
The ECM sends a target duty-cycle control signal to the OCV. This control signal regulates the oil pressure supplied to the VVT controller. The VVT controller can advance or retard the intake camshaft.
The ECM calibrates the intake valve timing by setting the intake camshaft to the most retarded angle while the engine is idling. The ECM closes the OCV to retard the cam. The ECM stores this value as the VVT learning value. When the difference between the target and actual intake valve timings is 5°CA (Crankshaft Angle) or less, the ECM stores it.
If the VVT learning value matches the following conditions, the ECM determines the existence of a malfunction in the VVT system, and sets the DTC.

- VVT learning value: Less than 25°CA, or more than 51°CA.
- Above condition continues for 18 seconds or more.

This DTC indicates that the angle between the intake camshaft and the crankshaft is incorrect due to factors such as the timing chain having jumped a tooth.
This monitor begins to run after the engine has idled for 5 minutes.

MONITOR STRATEGY

Related DTCs	P0016: Camshaft timing misalignment at idling
Required Sensors/Components	VVT actuator
Required Sensors/Components	Camshaft position sensor, Crankshaft position sensor
Frequency of Operation	Once per driving cycle
Duration	Within 1 minute
MIL Operation	2 driving cycles
Sequence of Operation	None

TYPICAL ENABLING CONDITIONS

Monitor runs whenever following DTCs not present	P0011 (VVT system 1 - advance) P0012 (VVT system 1 - retarded) P0115 - P0118 (ECT sensor)
Engine RPM	450 to 1,000 rpm

TYPICAL MALFUNCTION THRESHOLDS

One of following conditions met	-
VVT learning value when camshaft maximum retarded	Less than 25°CA
VVT learning value when camshaft maximum retarded	More than 51°CA

WIRING DIAGRAM

Refer to DTC P0335 (See page ES-163).

INSPECTION PROCEDURE

HINT:
Read freeze frame data using an intelligent tester. Freeze frame data record the engine condition when malfunctions are detected. When troubleshooting, freeze frame data can help determine if the vehicle was moving or stationary, if the engine was warmed up or not, if the air-fuel ratio was lean or rich, and other data, from the time the malfunction occurred.

ES

1	**CHECK VALVE TIMING (CHECK FOR LOOSE AND JUMPED TOOTH OF TIMING CHAIN) (See page ES-71)**

NG → **Go to step 3**

OK

2	**REPLACE ECM**

NEXT → **Go to step 4**

3	**ADJUST VALVE TIMING**

NEXT

4	**CHECK WHETHER DTC OUTPUT RECURS**

NOTICE:
After replacing the ECM or adjusting intake valve timing, confirm that the DTC output does not recur.

(a) Connect an intelligent tester to the DLC3.
(b) Turn the ignition switch to ON.
(c) Turn the tester ON.
(d) Clear DTCs (See page ES-34).
(e) Switch the ECM from normal mode to check mode using the tester (See page ES-37).
(f) Start the engine and warm it up.
(g) Allow the engine to idle for 1 minute or more, and then drive the vehicle for 1 minute or more.
(h) Confirm that no DTC is set, using the tester.
OK:
No DTC output

NEXT

END

DTC	P0031	Oxygen (A/F) Sensor Heater Control Circuit Low (Bank 1 Sensor 1)

DTC	P0032	Oxygen (A/F) Sensor Heater Control Circuit High (Bank 1 Sensor 1)

HINT:
- Although the DTC titles say the oxygen sensor, these DTCs relate to the Air-Fuel Ratio (A/F) sensor.
- Sensor 1 refers to the sensor mounted in front of the Three-Way Catalytic Converter (TWC) and located near the engine assembly.

DESCRIPTION

Refer to DTC P2195 (See page ES-276).
HINT:
- When either of these DTCs are set, the ECM enters fail-safe mode. The ECM turns off the A/F sensor heater in fail-safe mode. Fail-safe mode continues until the ignition switch is turned to OFF.
- The ECM provides a pulse width modulated control circuit to adjust the current through the heater. The A/F sensor heater circuit uses a relay on the B+ side of the circuit.

Reference (System Diagram of Sensor 1):

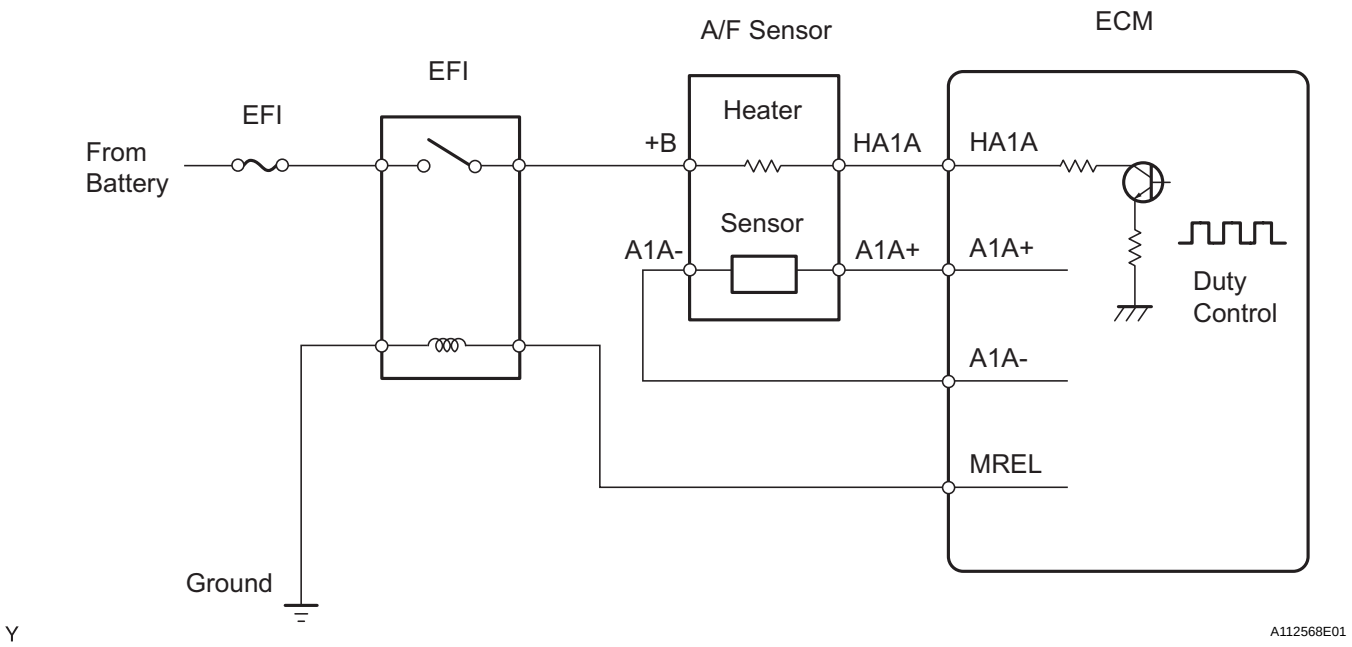

DTC No.	DTC Detection Conditions	Trouble Areas
P0031	Air-Fuel Ratio (A/F) sensor heater current less than 0.8 A (1 trip detection logic)	• Open in A/F sensor heater circuit • A/F sensor heater (sensor 1) • Integration relay (EFI relay) • ECM
P0032	Air-Fuel Ratio (A/F) sensor heater current more than 10 A (1 trip detection logic)	• Short in A/F sensor heater circuit • A/F sensor heater (sensor 1) • Integration relay (EFI relay) • ECM

MONITOR DESCRIPTION

The ECM uses information from the Air-Fuel Ratio (A/F) sensor to regulate the air-fuel ratio and keep it close to the stoichiometric level. This maximizes the ability of the Three-Way Catalytic Converter (TWC) to purify the exhaust gases.
The A/F sensor detects oxygen levels in the exhaust gas and transmits the information to the ECM. The inner surface of the sensor element is exposed to the outside air. The outer surface of the sensor element is exposed to the exhaust gas. The sensor element is made of platinum coated zirconia and includes an integrated heating element.
The zirconia element generates a small voltage when there is a large difference in the oxygen concentrations between the exhaust gas and outside air. The platinum coating amplifies this voltage generation.
The A/F sensor is more efficient when heated. When the exhaust gas temperature is low, the sensor cannot generate useful voltage signals without supplementary heating. The ECM regulates the supplementary heating using a duty-cycle approach to adjust the average current in the sensor heater element. If the heater current is outside the normal range, the signal transmitted by the A/F sensor becomes inaccurate, as a result, the ECM is unable to regulate air-fuel ratio properly.
When the current in the A/F sensor heater is outside the normal operating range, the ECM interprets this as a malfunction in the sensor heater and sets a DTC.
Example:
The ECM sets DTC P0032 when the current in the A/F sensor heater is more than 10 A. Conversely, when the heater current is less than 0.8 A, DTC P0031 is set.

MONITOR STRATEGY

Related DTCs	P0031: A/F sensor heater open/short (Low electrical current) P0032: A/F sensor heater open/short (High electrical current)
Required Sensors/Components (Main)	A/F sensor heater
Required Sensors/Components (Related)	-
Frequency of Operation	Continuous
Duration	10 seconds
MIL Operation	Immediate
Sequence of Operation	None

TYPICAL ENABLING CONDITIONS

All:

Monitor runs whenever following DTCs not present	None

P0031:

Battery voltage	10.5 V or more
A/F sensor heater duty-cycle ratio	50 % or more
Time after engine start	10 seconds or more

P0032:

Time after engine start	10 seconds or more

TYPICAL MALFUNCTION THRESHOLDS

P0031:

A/F sensor heater current	Less than 0.8 A

P0032:

A/F sensor heater current	More than 10 A

COMPONENT OPERATING RANGE

A/F sensor heater current	0.9 to 9.9 A

WIRING DIAGRAM

Refer to DTC P2195 (See page ES-280).

INSPECTION PROCEDURE

HINT:
Read freeze frame data using an intelligent tester. Freeze frame data record the engine condition when malfunctions are detected. When troubleshooting, freeze frame data can help determine if the vehicle was moving or stationary, if the engine was warmed up or not, if the air-fuel ratio was lean or rich, and other data, from the time the malfunction occurred.

1 INSPECT AIR FUEL RATIO SENSOR (HEATER RESISTANCE)

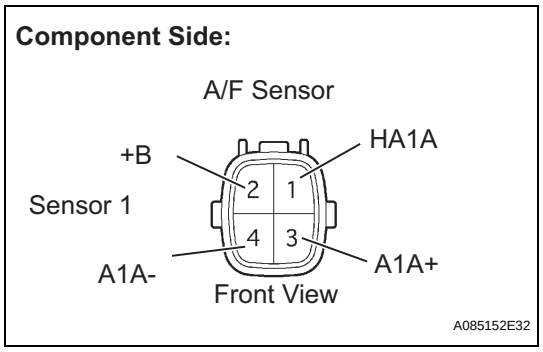

(a) Disconnect the C23 A/F sensor connector.
(b) Measure the resistance of the A/F sensor connector.
Standard resistance

Tester Connections	Specified Conditions
HA1A (1) - +B (2)	1.8 Ω to 3.4 Ω at 20°C (68°F)
HA1A (1) - A1A- (4)	10 kΩ or higher

(c) Reconnect the A/F sensor connector.

NG → **REPLACE AIR FUEL RATIO SENSOR**

OK

2 CHECK TERMINAL VOLTAGE (+B OF A/F SENSOR)

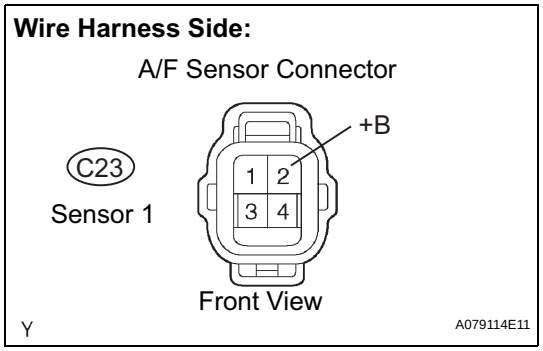

(a) Disconnect the C23 A/F sensor connector.
(b) Turn the ignition switch to ON.
(c) Measure the voltage between the terminals of the C23 A/F sensor connector and body ground.
Standard voltage

Tester Connections	Specified Conditions
+B (C23-2) - Body ground	11 to 14 V

(d) Reconnect the A/F sensor connector.

OK → **Go to step 5**

NG

3	INSPECT INTEGRATION RELAY (EFI RELAY)

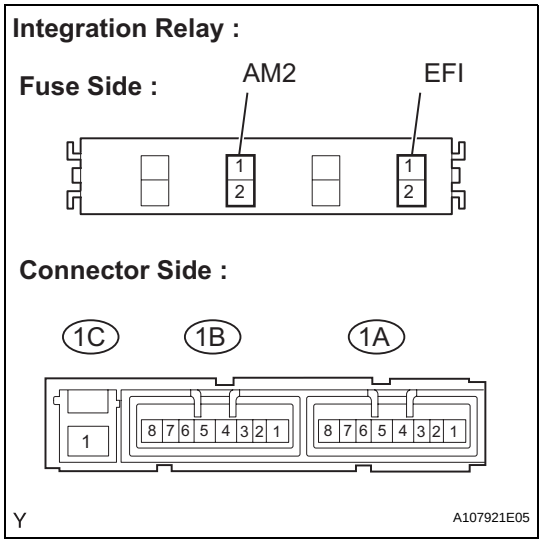

(a) Remove the integration relay from the engine room relay block.

(b) Inspect the EFI fuse.
  (1) Remove the EFI fuse from the integration relay.
  (2) Measure the EFI fuse resistance.
  Standard resistance:
  Below 1 Ω
  (3) Reinstall the EFI fuse.

(c) Inspect the EFI relay.
  (1) Measure the EFI relay resistance.
  Standard resistance

Tester Connections	Specified Conditions
1C-1 - 1A-4	10 kΩ or higher
	Below 1 Ω (Apply battery voltage between terminals 1A-2 and 1A-3)

(d) Reinstall the integration relay.

NG → **REPLACE INTEGRATION RELAY**

OK

4 CHECK HARNESS AND CONNECTOR (A/F SENSOR - EFI RELAY)

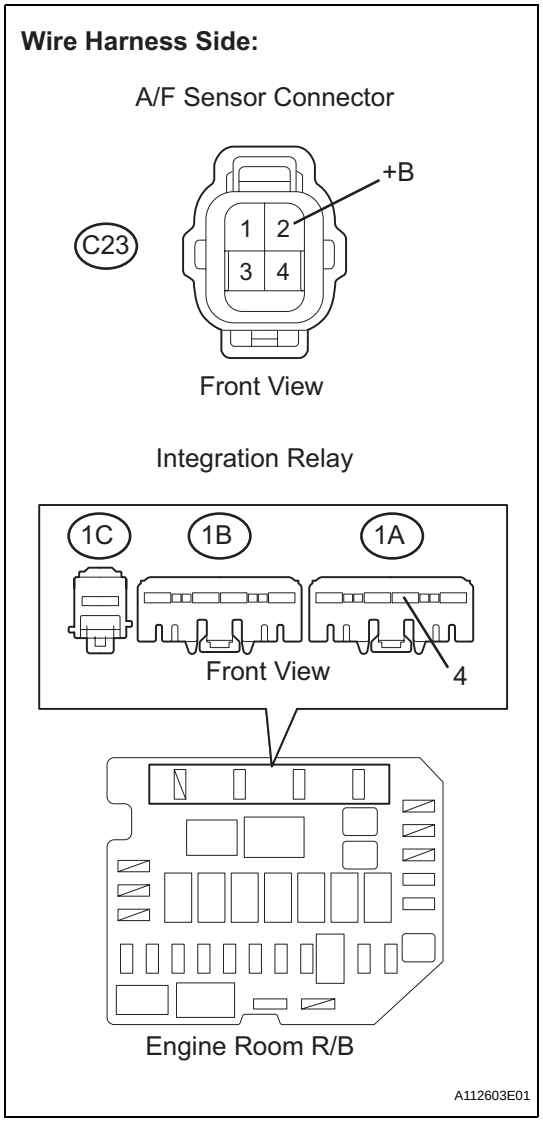

(a) Disconnect the C23 A/F sensor connector.
(b) Remove the integration relay from the engine room Relay Block (R/B).
(c) Check the resistance.

Standard resistance (Check for open)

Tester Connections	Specified Conditions
+B (C23-2) - Engine room R/B (1A-4)	Below 1 Ω

Standard resistance (Check for short)

Tester Connections	Specified Conditions
+B (C23-2) or Engine room R/B (1A-4) - Body ground	10 kΩ or higher

(d) Reconnect the A/F sensor connector.
(e) Reinstall the integration relay.

NG → **REPAIR OR REPLACE HARNESS OR CONNECTOR**

OK

CHECK ECM POWER SOURCE CIRCUIT

ES

ES

5 CHECK HARNESS AND CONNECTOR (A/F SENSOR - ECM)

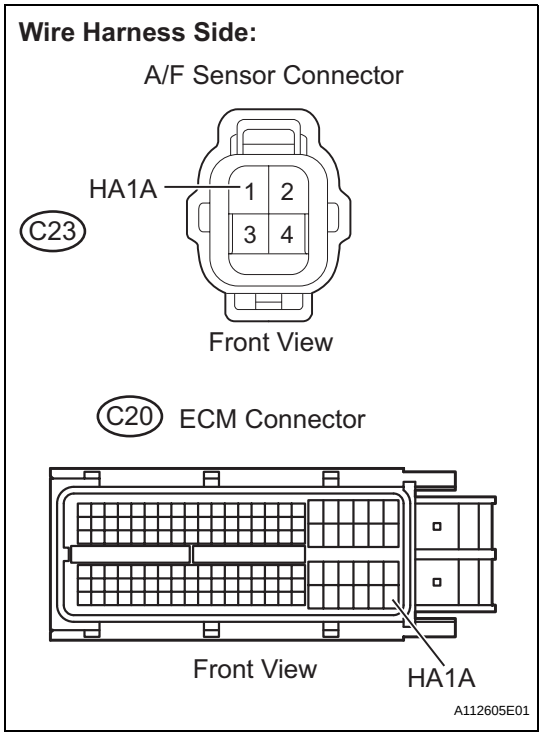

(a) Disconnect the C23 A/F sensor connector.
(b) Disconnect the C20 ECM connector.
(c) Check the resistance.

Standard resistance (Check for open)

Tester Connections	Specified Conditions
HA1A (C23-1) - HA1A (C20-109)	Below 1 Ω

Standard resistance (Check for short)

Tester Connections	Specified Conditions
HA1A (C23-1) or HA1A (C20-109) - Body ground	10 kΩ or higher

(d) Reconnect the A/F sensor connector.
(e) Reconnect the ECM connector.

NG → **REPAIR OR REPLACE HARNESS OR CONNECTOR**

OK

6 CHECK WHETHER DTC OUTPUT RECURS

(a) Connect the intelligent tester to the DLC3.
(b) Turn the ignition switch to ON.
(c) Turn the tester ON.
(d) Clear DTCs (See page ES-34).
(e) Start the engine.
(f) Allow the engine to idle for 1 minute or more.
(g) Select the following menu items: DIAGNOSIS / ENHANCED OBD II / DTC INFO / CURRENT CODES.
(h) Read DTCs.

Result

Display (DTC Output)	Proceed To
No output	A
P0031 or P0032	B

B → **REPLACE ECM**

A

CHECK FOR INTERMITTENT PROBLEMS

DTC	P0037	Oxygen Sensor Heater Control Circuit Low (Bank 1 Sensor 2)

DTC	P0038	Oxygen Sensor Heater Control Circuit High (Bank 1 Sensor 2)

DTC	P0141	Oxygen Sensor Heater Circuit Malfunction (Bank 1 Sensor 2)

HINT:
Sensor 2 refers to the sensor mounted behind the Three-Way Catalytic Converter (TWC) and located far from the engine assembly.

DESCRIPTION

Refer to DTC P0136 (See page ES-119).
HINT:
- When any of these DTCs are set, the ECM enters fail-safe mode. The ECM turns off the Heated Oxygen (HO2) Sensor heater in fail-safe mode. Fail-safe mode continues until the ignition switch is turned to OFF.
- The ECM provides a pulse width modulated control circuit to adjust the current through the heater. The HO2 sensor heater circuit uses a relay on the B+ side of the circuit.

Reference (System Diagram of Sensor 2):

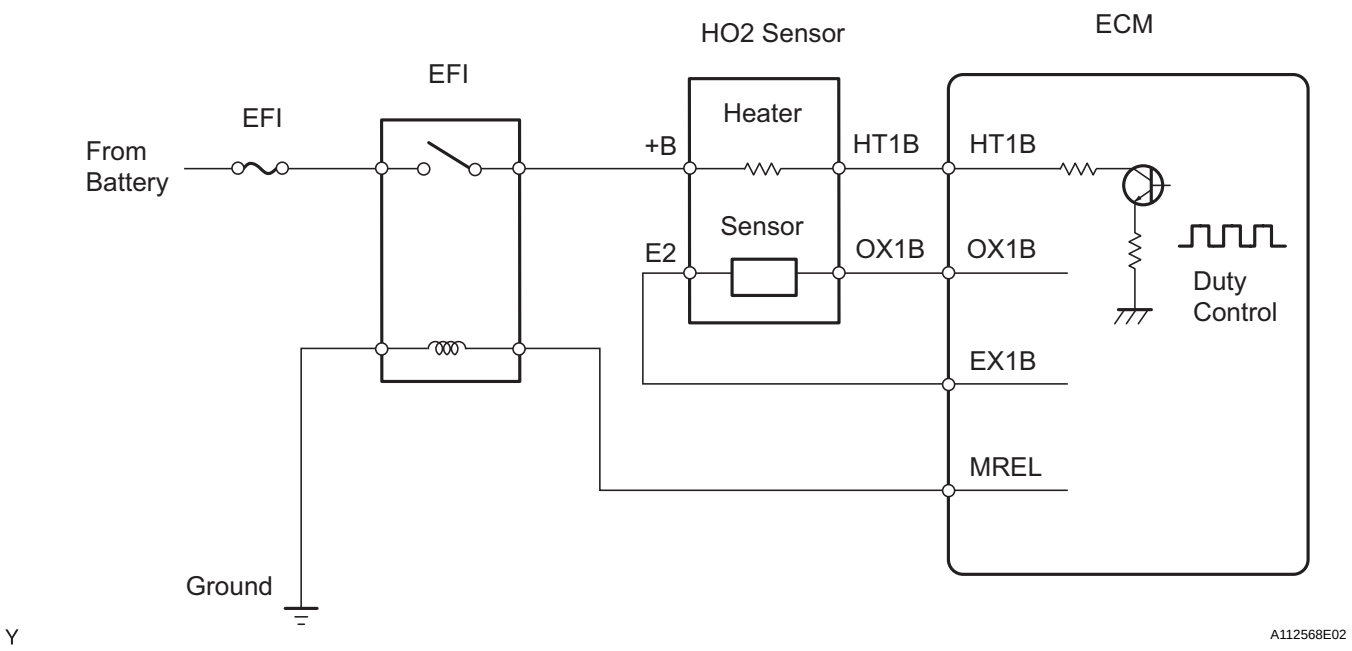

DTC No.	DTC Detection Conditions	Trouble Areas
P0037	Heated Oxygen (HO2) sensor heater current less than 0.3 A (1 trip detection logic)	• Open in HO2 sensor heater circuit • HO2 sensor heater (sensor 2) • Integration relay (EFI relay) • ECM
P0038	Heated Oxygen (HO2) sensor heater current more than 2 A (1 trip detection logic)	• Short in HO2 sensor heater circuit • HO2 sensor heater (sensor 2) • Integration relay (EFI relay) • ECM

DTC No.	DTC Detection Conditions	Trouble Areas
P0141	Cumulative heater resistance correction value exceeds threshold (2 trip detection logic)	• Open or short in HO2 sensor heater circuit • HO2 sensor heater (sensor 2) • Integration relay (EFI relay) • ECM

MONITOR DESCRIPTION

The sensing position of the Heated Oxygen (HO2) sensor has a zirconia element which is used to detect the oxygen concentration in the exhaust gas. If the zirconia element is at the appropriate temperature, and the difference between the oxygen concentrations surrounding the inside and outside surfaces of the sensor is large, the zirconia element generates voltage signals. In order to increase the oxygen concentration detecting capacity of the zirconia element, the ECM supplements the heat from the exhaust with heat from a heating element inside the sensor.

Heated oxygen sensor heater range check (P0037 and P0038):

The ECM monitors the current applied to the O2 sensor heater to check the heater for malfunctions. If the current is below the threshold value, the ECM determines that there is an open circuit in the heater. If the current is above the threshold value, the ECM determines that there is a short circuit in the heater.
The ECM constantly monitors the current applied to the heater. If the ECM detects an open or short circuit, the ECM turns the MIL on and sets a DTC.
If a malfunction is detected, the ECM cuts off the current applied to the heater.
Example:
The ECM sets DTC P0038 when the current in the HO2 sensor heater is more than 2 A. Conversely, when the heater current is less than 0.3 A, DTC P0037 is set.

Heated oxygen sensor heater performance (P0141):

After the accumulated heater ON time exceeds 100 seconds, the ECM calculates the heater resistance using the battery voltage and the current applied to the heater.
If the resistance is above the threshold value, the ECM determines that there is a malfunction in the HO2 sensor heater and sets DTC P0141.

MONITOR STRATEGY

Related DTCs	P0037: Heated oxygen sensor heater range check (Low electrical current) P0038: Heated oxygen sensor heater range check (High electrical current) P0141: Heated oxygen sensor heater performance
Required Sensors/Components (Main)	Heated oxygen sensor heater
Required Sensors/Components (Related)	-
Frequency of Operation	Continuous: P0037 and P0038 Once per driving cycle: P0141
Duration	1 second: P0037 and P0038 10 seconds: P0141
MIL Operation	Immediate: P0037 and P0038 2 driving cycles: P0141
Sequence of Operation	None

TYPICAL ENABLING CONDITIONS

All:

Monitor runs whenever following DTCs not present	None

P0037:

Battery voltage	10.5 to 20 V

P0038:

Battery voltage	10.5 to 20 V

P0141 (Heater performance monitor check):

All of following conditions met:	-
Battery voltage	10.5 V or more
Fuel cut	OFF
Time after fuel cut ON to OFF	30 seconds or more
Accumulated heater ON time	100 seconds or more

TYPICAL MALFUNCTION THRESHOLDS

P0037:

Heater current	Less than 0.3 A

P0038:

Heater current	2 A or more

P0141 (Heater performance monitor check):

Accumulated heater resistance	Varies with sensor element temperature (Example: More than 23 ohm)

COMPONENT OPERATING RANGE

Heated Oxygen (HO2) sensor heater current	0.4 to 1 A (when engine idles, HO2 sensor warmed up and battery voltage 11 to 14 V)

MONITOR RESULT

Refer to CHECKING MONITOR STATUS (See page ES-17).

WIRING DIAGRAM

Refer to DTC P0136 (See page ES-126).

CONFIRMATION DRIVING PATTERN

These DTCs are detected when the engine idles for 110 seconds or more.

INSPECTION PROCEDURE

HINT:
Read freeze frame data using an intelligent tester. Freeze frame data record the engine condition when malfunctions are detected. When troubleshooting, freeze frame data can help determine if the vehicle was moving or stationary, if the engine was warmed up or not, if the air-fuel ratio was lean or rich, and other data, from the time the malfunction occurred.

1	INSPECT HEATED OXYGEN SENSOR (HEATER RESISTANCE)

Component Side :

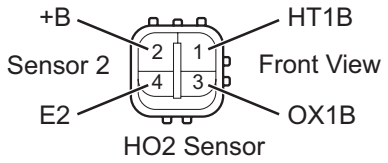

A115661E02

(a) Disconnect the D28 Heated Oxygen (HO2) sensor connector.

(b) Measure the resistance of the HO2 sensor connector.

Standard resistance

Tester Connections	Specified Conditions
HT1B (1) - +B (2)	**11 to 16 Ω at 20°C (68°F)**
HT1B (1) - E2 (4)	**10 kΩ or higher**

(c) Reconnect the HO2 sensor connector.

NG → **REPLACE HEATED OXYGEN SENSOR**

OK

2	CHECK TERMINAL VOLTAGE (+B OF HO2 SENSOR)

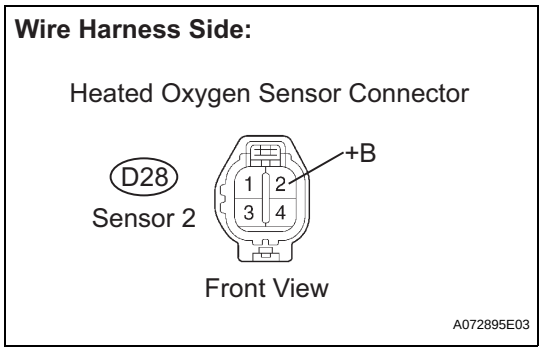

(a) Disconnect the D28 HO2 sensor connector.
(b) Measure the voltage between the terminals of the D28 HO2 sensor connector and body ground.
Standard voltage

Tester Connections	Specified Conditions
+B (D28-2) - Body ground	11 to 14 V

(c) Reconnect the HO2 sensor connector.

OK → **Go to step 5**

NG

3	INSPECT INTEGRATION RELAY (EFI RELAY) (See page ES-78)

NG → **REPLACE INTEGRATION RELAY**

OK

ES

4 CHECK HARNESS AND CONNECTOR (HO2 SENSOR - EFI RELAY)

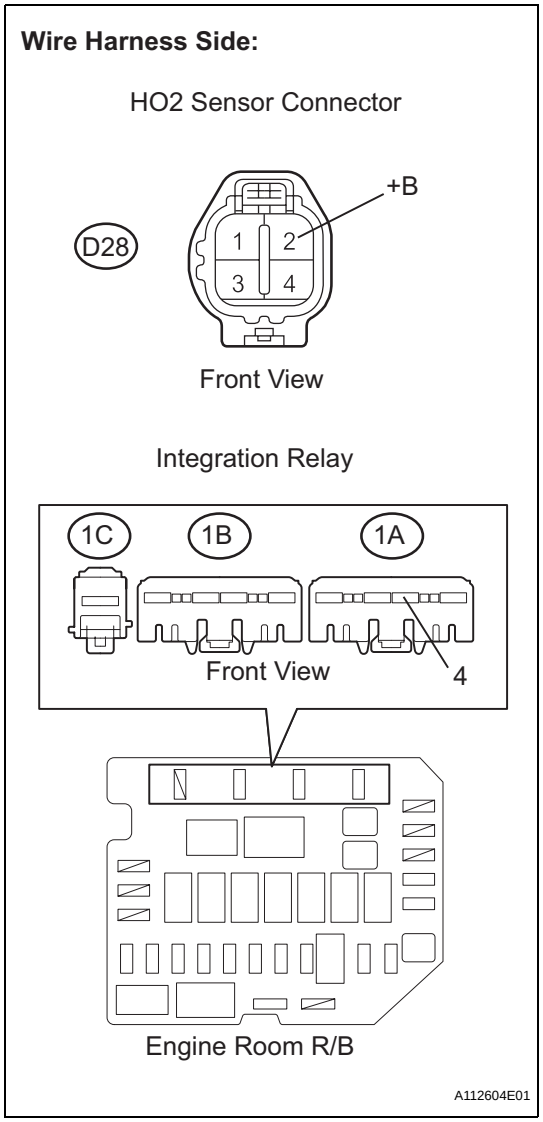

(a) Disconnect the D28 HO2 sensor connector.
(b) Remove the integration relay from the engine room Relay Block (R/B).
(c) Check the resistance.

Standard resistance (Check for open)

Tester Connections	Specified Conditions
+B (D28-2) - Engine room R/B (1A-4)	Below 1 Ω

Standard resistance (Check for short)

Tester Connections	Specified Conditions
+B (D28-2) or Engine room R/B (1A-4) - Body ground	10 kΩ or higher

(d) Reconnect the HO2 sensor connector.
(e) Reinstall the integration relay.

NG → **REPAIR OR REPLACE HARNESS OR CONNECTOR**

OK

CHECK ECM POWER SOURCE CIRCUIT

ES

ES

5 CHECK HARNESS AND CONNECTOR (HO2 SENSOR - ECM)

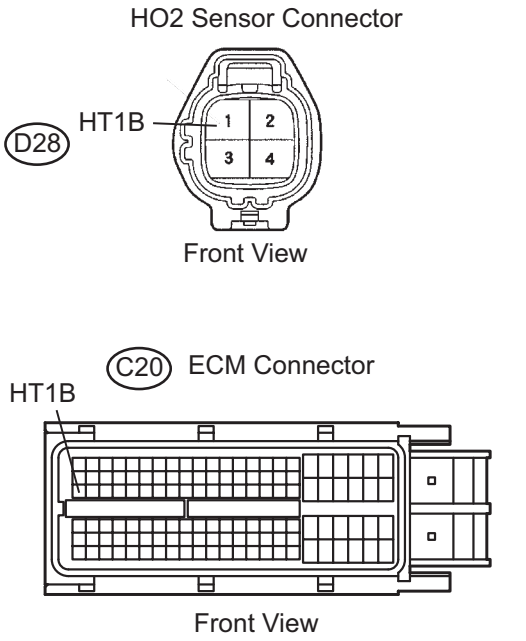

(a) Disconnect the D28 HO2 sensor connector.
(b) Disconnect the C20 ECM connector.
(c) Measure the resistance.

Standard resistance (Check for open)

Tester Connections	Specified Conditions
HT1B (D28-1) - HT1B (C20-47)	Below 1 Ω

Standard resistance (Check for short)

Tester Connections	Specified Conditions
HT1B (D28-1) or HT1B (C20-47) - Body ground	10 kΩ or higher

(d) Reconnect the HO2 sensor connector.
(e) Reconnect the ECM connector.

NG → **REPAIR OR REPLACE HARNESS OR CONNECTOR**

OK

6 CHECK WHETHER DTC OUTPUT RECURS

(a) Connect the intelligent tester to the DLC3.
(b) Turn the ignition switch to ON.
(c) Turn the tester ON.
(d) Clear DTCs (See page ES-34).
(e) Start the engine.
(f) Allow the engine to idle for 2 minutes or more.
(g) Select the following menu items: DIAGNOSIS / ENHANCED OBD II / DTC INFO / CURRENT CODES.
(h) Read DTCs.

Result

Display (DTC Output)	Proceed To
No output	A
P0037, P0038 and/or P0141	B

B → **REPLACE ECM**

A

CHECK FOR INTERMITTENT PROBLEMS

DTC	P0100	Mass or Volume Air Flow Circuit

DTC	P0102	Mass or Volume Air Flow Circuit Low Input

DTC	P0103	Mass or Volume Air Flow Circuit High Input

DESCRIPTION

The Mass Air Flow (MAF) meter is a sensor that measures the amount of air flowing through the throttle valve.
The ECM uses this information to determine the fuel injection time and to provide the appropriate air-fuel ratio.
Inside the MAF meter, there is a heated platinum wire which is exposed to the flow of intake air.
By applying a specific electrical current to the wire, the ECM heats it to a given temperature. The flow of incoming air cools both the wire and an internal thermistor, affecting their resistance. To maintain a constant current value, the ECM varies the voltage applied to these components in the MAF meter. The voltage level is proportional to the airflow through the sensor, and the ECM uses it to calculate the intake air volume.
The circuit is constructed so that the platinum hot wire and the temperature sensor create a bridge circuit, and the power transistor is controlled so that the potentials of A and B remain equal to maintain the predetermined temperature.
HINT:
When any of these DTCs are set, the ECM enters fail-safe mode. During fail-safe mode, the ignition timing is calculated by the ECM, according to the engine RPM and throttle valve position. Fail-safe mode continues until a pass condition is detected.

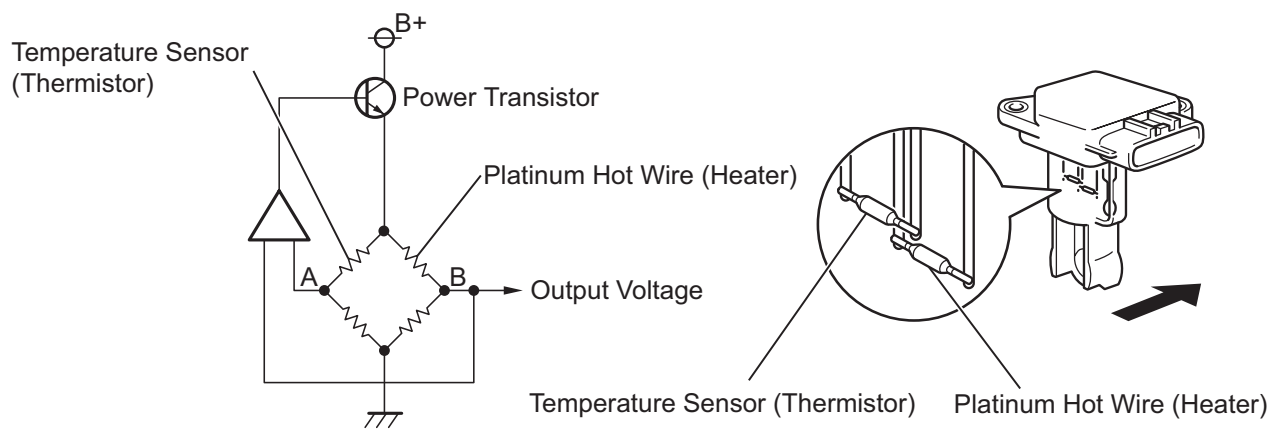

A122492E01

DTC No.	DTC Detection Conditions	Trouble Areas
P0100	MAF meter voltage less than 0.2 V, or more than 4.9 V for 3 seconds (1 trip detection logic)	• Open or short in MAF meter circuit • MAF meter • ECM
P0102	MAF meter voltage less than 0.2 V for 3 seconds (1 trip detection logic)	• Open or short in MAF meter circuit • MAF meter • ECM
P0103	MAF meter voltage more than 4.9 V for 3 seconds (1 trip detection logic)	• Open or short in MAF meter circuit • MAF meter • ECM

HINT:
When any of these DTCs are set, check the air-flow rate by selecting the following menu items on an intelligent tester: DIAGNOSIS / ENHANCED OBD II / DATA LIST / PRIMARY / MAF.

Mass Air Flow Rate (g/sec)	Malfunctions
Approximately 0.0	• Open in Mass Air Flow (MAF) meter power source circuit • Open or short in VG circuit
271.0 or more	• Open in EVG circuit

MONITOR DESCRIPTION

If there is a defect in the MAF meter or an open or short circuit, the voltage level deviates from the normal operating range. The ECM interprets this deviation as a malfunction in the MAF meter and sets a DTC.
Example:
When the sensor output voltage remains less than 0.2 V, or more than 4.9 V, for more than 3 seconds, the ECM sets a DTC.
If the malfunction is not repaired successfully, a DTC is set 3 seconds after the engine is next started.

MONITOR STRATEGY

Related DTCs	P0100: MAF meter range check (Fluctuating) P0102: MAF meter range check (Low voltage) P0103: MAF meter range check (High voltage)
Required Sensors/Components (Main)	MAF meter
Required Sensors/Components (Related)	Crankshaft position sensor
Frequency of Operation	Continuous
Duration	3 seconds
MIL Operation	Immediate: Engine RPM less than 4,000 rpm 2 driving cycles: Engine RPM 4,000 rpm or more
Sequence of Operation	None

TYPICAL ENABLING CONDITIONS

Monitor runs whenever following DTCs not present	None

TYPICAL MALFUNCTION THRESHOLDS

P0100:

MAF meter voltage	Less than 0.2 V, or more than 4.9 V

P0102:

MAF meter voltage	Less than 0.2 V

P0103:

MAF meter voltage	More than 4.9 V

COMPONENT OPERATING RANGE

MAF meter voltage	Between 0.4 V and 2.2 V

WIRING DIAGRAM

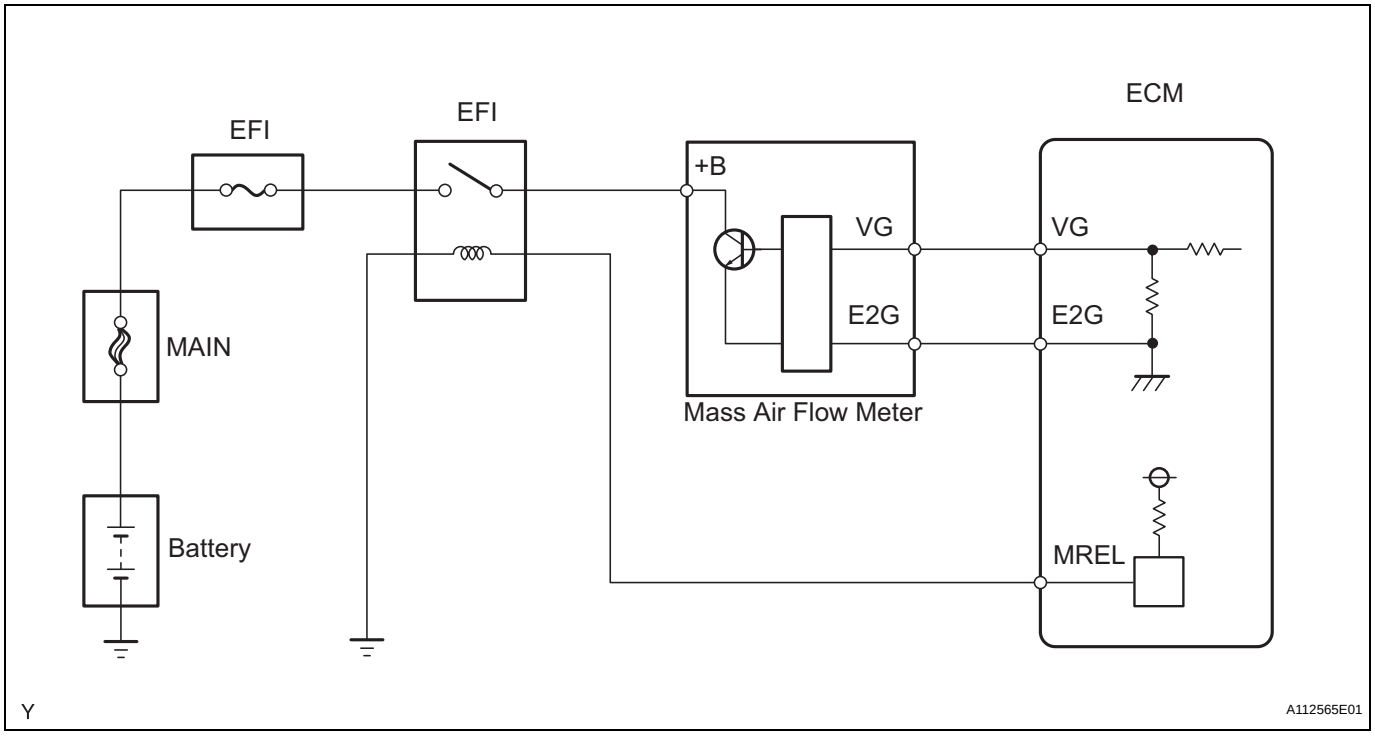

INSPECTION PROCEDURE

HINT:
Read freeze frame data using an intelligent tester. Freeze frame data record the engine condition when malfunctions are detected. When troubleshooting, freeze frame data can help determine if the vehicle was moving or stationary, if the engine was warmed up or not, if the air-fuel ratio was lean or rich, and other data, from the time the malfunction occurred.

1	READ VALUE USING INTELLIGENT TESTER (MASS AIR FLOW RATE)

(a) Connect an intelligent tester to the DLC3.
(b) Start the engine.
(c) Turn the tester ON.
(d) Select the following menu items: DIAGNOSIS / ENHANCED OBD II / DATA LIST / PRIMARY / MAF.
(e) Read the values displayed on the tester.

Result

Mass Air Flow Rate (g/sec)	Proceed To
0.0	A
271.0 or more	B
Between 1.0 and 270.0 (*1)	C

*1: The value must be changed when the throttle valve is open or closed with the engine running.

B → Go to step 6

C → CHECK FOR INTERMITTENT PROBLEMS

A

ES

2 INSPECT MASS AIR FLOW METER (POWER SOURCE VOLTAGE)

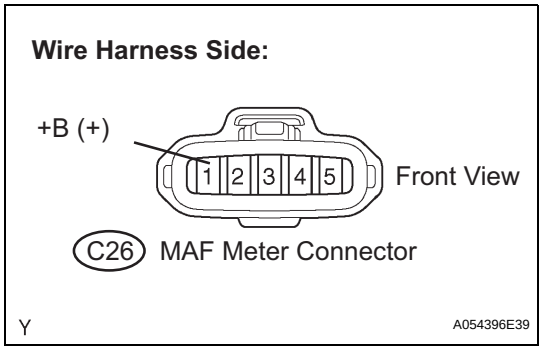

(a) Disconnect the C26 Mass Air Flow (MAF) meter connector.
(b) Turn the ignition switch to ON.
(c) Measure the voltage between the terminal of the wire harness side connector and body ground.
Standard voltage

Tester Connections	Specified Conditions
+B (C26-1) - Body ground	11 to 14 V

(d) Reconnect the MAF meter connector.

NG → **Go to step 5**

OK

3 INSPECT MASS AIR FLOW METER (VG VOLTAGE)

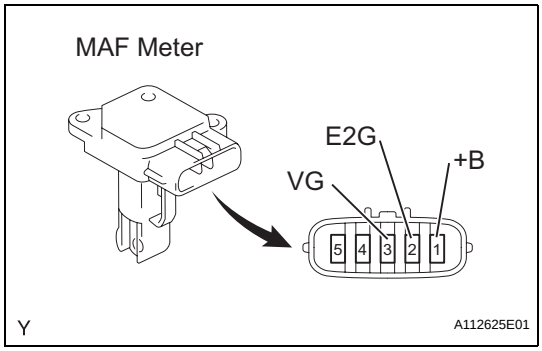

(a) Output voltage inspection.
(1) Apply battery voltage across terminals +B and E2G.
(2) Connect the positive (+) tester prove to terminal VG, and negative (-) tester prove to terminal E2G.
(3) Check the voltage.
Standard voltage

Tester Connections	Specified Conditions
VG (3) - E2G (2)	0.2 to 4.9 V

NG → **REPLACE MASS AIR FLOW METER**

OK

ES

4 CHECK HARNESS AND CONNECTOR (MASS AIR FLOW METER - ECM)

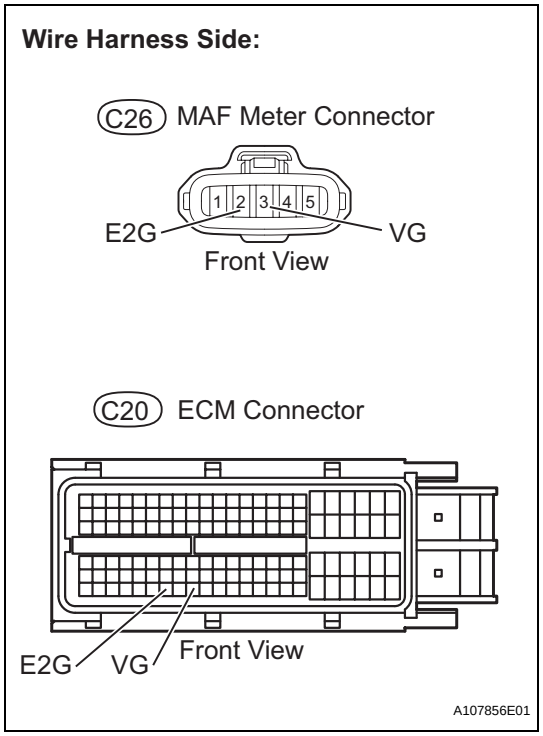

(a) Disconnect the C26 MAF meter connector.
(b) Disconnect the C20 ECM connector.
(c) Check the resistance.

Standard resistance (Check for open)

Tester Connections	Specified Conditions
VG (C26-3) - VG (C20-118)	Below 1 Ω
E2G (C26-2) - E2G (C20-116)	

Standard resistance (Check for short)

Tester Connections	Specified Conditions
VG(C26-3) or VG (C20-118) - Body ground	10 kΩ or higher

(d) Reconnect the MAF meter connector.
(e) Reconnect the ECM connector.

NG → **REPAIR OR REPLACE HARNESS OR CONNECTOR**

OK

REPLACE ECM

ES

5	CHECK HARNESS AND CONNECTOR (MASS AIR FLOW METER - INTEGRATION RELAY)

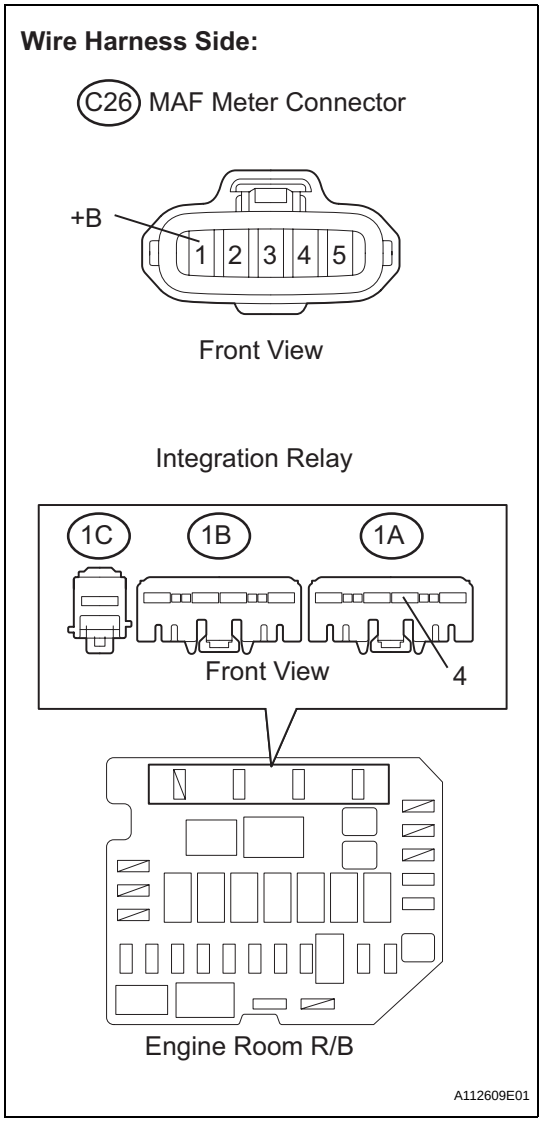

(a) Disconnect the C26 MAF meter connector.
(b) Remove the integration relay from the engine room Relay Block (R/B).
(c) Check the resistance.

Standard resistance (Check for open)

Tester Connections	Specified Conditions
+B (C26-1) - 1A-4	Below 1 Ω

Standard resistance (Check for short)

Tester Connections	Specified Conditions
+B (C26-1) or 1A-4 - Body ground	10 kΩ or higher

(d) Reconnect the MAF meter connector.
(e) Reinstall the integration relay.

NG → **REPAIR OR REPLACE HARNESS OR CONNECTOR**

OK

CHECK ECM POWER SOURCE CIRCUIT

ES

6 CHECK HARNESS AND CONNECTOR (SENSOR GROUND)

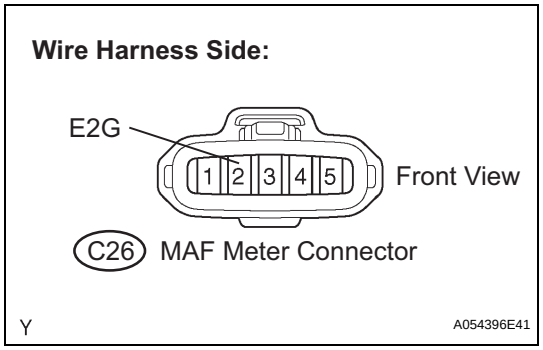

(a) Disconnect the C26 MAF meter connector.
(b) Check the resistance.
Standard resistance

Tester Connections	Specified Conditions
E2G (C26-2) - Body ground	Below 1 Ω

(c) Reconnect the MAF meter connector.

OK → **REPLACE MASS AIR FLOW METER**

NG

7 CHECK HARNESS AND CONNECTOR (MASS AIR FLOW METER - ECM)

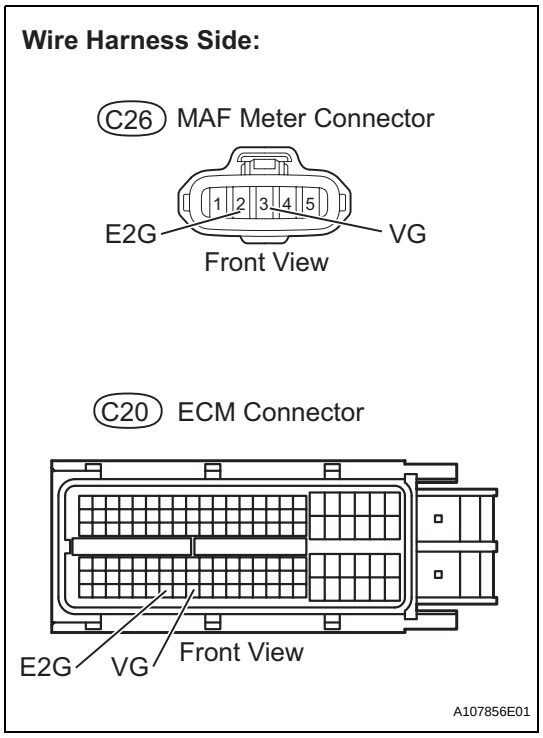

(a) Disconnect the C26 MAF meter connector.
(b) Disconnect the C20 ECM connector.
(c) Check the resistance.
Standard resistance (Check for open)

Tester Connections	Specified Conditions
VG (C26-3) - VG (C20-118)	Below 1 Ω
E2G (C26-2) - E2G (C20-116)	

Standard resistance (Check for short)

Tester Connections	Specified Conditions
VG (C26-3) or VG (C20-118) - Body ground	10 kΩ or higher

(d) Reconnect the MAF meter connector.
(e) Reconnect the ECM connector.

NG → **REPAIR OR REPLACE HARNESS OR CONNECTOR**

OK

REPLACE ECM

ES

DTC	P0101	Mass Air Flow Circuit Range / Performance Problem

DESCRIPTION

Refer to DTC P0100 (See page ES-80).

DTC No.	DTC Detection Conditions	Trouble Areas
P0101	Conditions (a), (b), (c), (d) and (e) continue for more than 10 seconds(2 trip detection logic): (a) Engine running (b) Engine coolant temperature 70°C (158°F) or higher (c) Throttle Position (TP) sensor voltage 0.24 V or more (d) Average engine load value ratio less than 0.80, or more than 1.23 (varies with estimated engine load) Average engine load value ratio = Average engine load based on MAF meter output / Average engine load estimated from driving conditions (e) Average air-fuel ratio less than -20 %, or more than 20 %	• Mass Air Flow (MAF) meter • Air induction system • PCV hose connections

ES

MONITOR DESCRIPTION

The MAF meter is a sensor that measures the amount of air flowing through the throttle valve. The ECM uses this information to determine the fuel injection time and to provide an appropriate air-fuel ratio. Inside the MAF meter, there is a heated platinum wire which is exposed to the flow of intake air. By applying a specific electrical current to the wire, the ECM heats it to a specific temperature. The flow of incoming air cools both the wire and an internal thermistor, affecting their resistance. To maintain a constant current value, the ECM varies the voltage applied to these components of the MAF meter. The voltage level is proportional to the airflow through the sensor, and the ECM uses it to calculate the intake air volume.
The ECM monitors the average engine load value ratio to check the MAF meter for malfunctions. The average engine load value ratio is obtained by comparing the average engine load calculated from the MAF meter output to the average engine load estimated from the driving conditions, such as the engine speed and the throttle opening angle. If the average engine load value ratio is below the threshold value, the ECM determines that the intake air volume is low, and if the average engine load value ratio is above the threshold value, the ECM determines that the intake air volume is high.
If this is detected in 2 consecutive driving cycles, the MIL is illuminated and a DTC is set.

MONITOR STRATEGY

Related DTCs	P0101: Mass air flow meter rationality
Required Sensors/Components (Main)	Mass air flow meter
Required Sensors/Components (Related)	Crankshaft Position (CKP) sensor, Engine Coolant Temperature (ECT) sensor and Throttle Position (TP) sensor
Frequency of Operation	Continuous
Duration	10 seconds
MIL Operation	2 driving cycles
Sequence of Operation	None

TYPICAL ENABLING CONDITIONS

Monitor runs whenever following DTCs not present	P0115 - P0118 (ECT sensor) P0120 - P0223, P2135 (TP sensor) P0125 (Insufficient ECT for closed loop) P0335 (CKP sensor) P0340 (CMP sensor)
Throttle position (TP sensor voltage)	0.24 V or more
Engine	Running
Battery voltage	10.5 V or more

Engine coolant temperature	70°C (158°F) or more
IAT sensor circuit	OK
ECT sensor circuit	OK
CKP sensor circuit	OK
TP sensor circuit	OK
Canister pressure sensor circuit	OK
EVAP leak detection pump	OK
EVAP vent valve	OK

TYPICAL MALFUNCTION THRESHOLDS

Both of following conditions 1 and 2 met	-
1. Averaged engine load value ratio	Less than 0.80, or more than 1.23 (varies with estimated engine load)
2. Averaged air-fuel ratio	Less than -20 %, or more than 20 %

WIRING DIAGRAM

Refer to DTC P0100 (See page ES-82).

CONFIRMATION DRIVING PATTERN

HINT:
Performing this confirmation pattern will activate the mass air flow performance monitor.

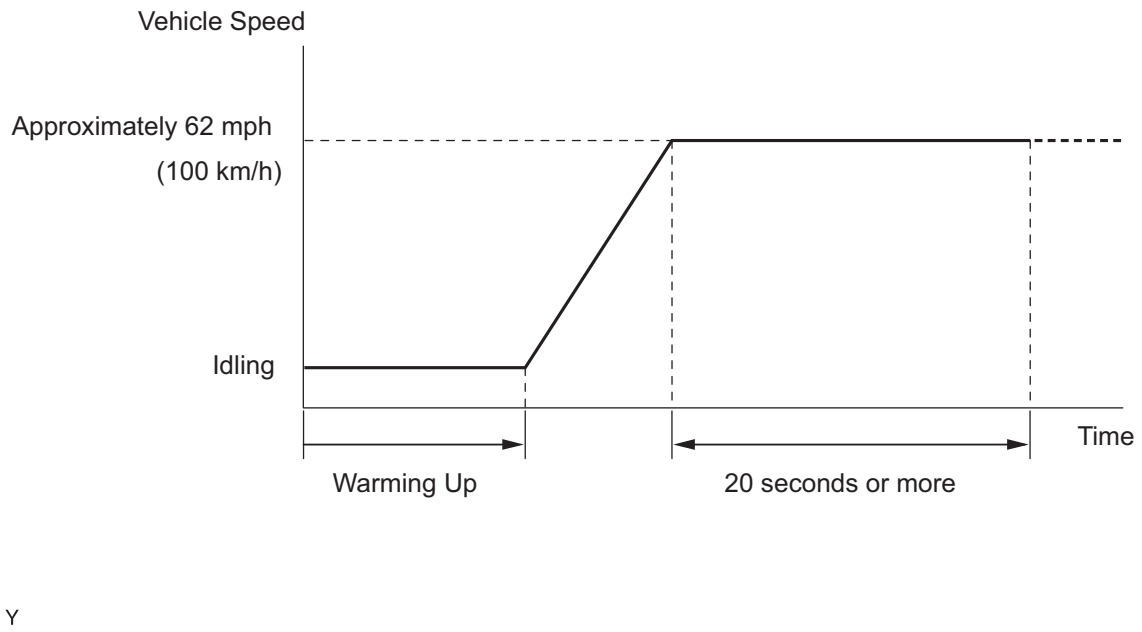

1. Connect the intelligent tester to the DLC3.
2. Turn the ignition switch to ON.
3. Turn the tester ON.
4. Clear DTCs (See page ES-34).
5. Start the engine, and warm it up until the engine coolant temperature reaches 70°C (158°F) or higher.
6. Drive the vehicle at approximately 62 mph (100 km/h) for 20 seconds or more.
7. On the tester, select the following menu items: DIAGNOSIS / ENHANCED OBD II / DTC INFO / PENDING CODES and check if any DTCs (any pending DTCs) are set.

INSPECTION PROCEDURE

HINT:
Read freeze frame data using an intelligent tester. Freeze frame data record the engine condition when malfunctions are detected. When troubleshooting, freeze frame data can help determine if the vehicle was moving or stationary, if the engine was warmed up or not, if the air-fuel ratio was lean or rich, and other data, from the time the malfunction occurred.

ES

1 CHECK ANY OTHER DTCS OUTPUT (IN ADDITION TO DTC P0101)

(a) Connect an intelligent tester to the DLC3.
(b) Turn the ignition switch to ON.
(c) Turn the tester ON.
(d) Select the following menu items: DIAGNOSIS / ENHANCED OBD II / DTC INFO / CURRENT CODES.
(e) Read DTCs.

Result

Display (DTC Output)	Proceed To
P0101	A
P0101 and other DTCs	B

HINT:
If any DTCs other than P0101 are output, troubleshoot those DTCs first.

B → **GO TO DTC CHART**

A

2 CHECK AIR INDUCTION SYSTEM

(a) Check the air induction system for vacuum leakage.
OK:
No leakage from air induction system.

NG → **REPAIR OR REPLACE AIR INDUCTION SYSTEM**

OK

3 CHECK PCV HOSE CONNECTIONS

OK:
PCV hose is connected correctly and is not damaged.

NG → **REPAIR OR REPLACE PCV HOSE**

OK

REPLACE MASS AIR FLOW METER

DTC	P0110	Intake Air Temperature Circuit Malfunction

DTC	P0112	Intake Air Temperature Circuit Low Input

DTC	P0113	Intake Air Temperature Circuit High Input

DESCRIPTION

Fig. 1

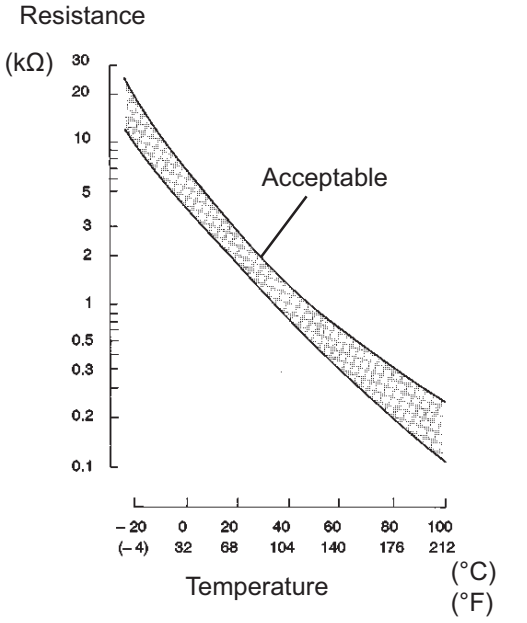

The Intake Air Temperature (IAT) sensor, mounted on the Mass Air Flow (MAF) meter, monitors the IAT. The IAT sensor has a built in thermistor with a resistance that varies according to the temperature of the intake air. When the IAT is low, the resistance of the thermistor increases. When the temperature is high, the resistance drops. These variations in resistance are transmitted to the ECM as voltage changes (see Fig. 1).

The IAT sensor is powered by a 5 V supply from the THA terminal of the ECM, via resistor R.

Resistor R and the IAT sensor are connected in series. When the resistance value of the IAT sensor changes, according to changes in the IAT, the voltage at terminal THA also varies. Based on this signal, the ECM increases the fuel injection volume when the engine is cold to improve driveability.

HINT:

When any of DTCs P0110, P0112 and P0113 are set, the ECM enters fail-safe mode. During fail-safe mode, the IAT is estimated to be 20°C (68°F) by the ECM. Fail-safe mode continues until a pass condition is detected.

DTC No.	Proceed To	DTC Detection Conditions	Trouble Areas
P0110	Step 1	Open or short in IAT sensor circuit for 0.5 seconds (1 trip detection logic)	• Open or short in IAT sensor circuit • IAT sensor (built into MAF meter) • ECM
P0112	Step 4	Short in IAT sensor circuit for 0.5 seconds (1 trip detection logic)	• Short in IAT sensor circuit • IAT sensor (built into MAF meter) • ECM
P0113	Step 2	Open in IAT sensor circuit for 0.5 seconds (1 trip detection logic)	• Open in IAT sensor circuit • IAT sensor (built into MAF meter) • ECM

HINT:
When any of these DTCs are set, check the IAT by selecting the following menu items on an intelligent tester: DIAGNOSIS / ENHANCED OBD II / DATA LIST / PRIMARY / INTAKE AIR.

Temperature Displayed	Malfunctions
-40°C (-40°F)	Open circuit
140°C (284°F) or higher	Short circuit

MONITOR DESCRIPTION

The ECM monitors the sensor voltage and uses this value to calculate the IAT. When the sensor output voltage deviates from the normal operating range, the ECM interprets this as a malfunction in the IAT sensor and sets a DTC.

Example:
If the sensor output voltage is more than 4.91 V for 0.5 seconds or more, the ECM determines that there is an open in the IAT sensor circuit, and sets DTC P0113. Conversely, if the output voltage is less than 0.18 V for 0.5 seconds or more, the ECM determines that there is a short in the sensor circuit, and sets DTC P0112.
If the malfunction is not repaired successfully, a DTC is set 0.5 seconds after the engine is next started.

MONITOR STRATEGY

Related DTCs	P0110: IAT sensor range check (Fluctuating) P0112: IAT sensor range check (Low voltage) P0113: IAT sensor range check (High voltage)
Required Sensors/Components (Main)	IAT sensor
Required Sensors/Components (Related)	-
Frequency of Operation	Continuous
Duration	0.5 seconds
MIL Operation	Immediate
Sequence of Operation	None

TYPICAL ENABLING CONDITIONS

Monitor runs whenever following DTCs not present	None

TYPICAL MALFUNCTION THRESHOLDS

P0110:

IAT sensor voltage	Less than 0.18 V, or more than 4.91 V

P0112:

IAT sensor voltage [IAT]	Less than 0.18 V [More than 140°C (284°F)]

P0113:

IAT sensor voltage [IAT]	More than 4.91 V [Less than -40°C (-40°F)]

COMPONENT OPERATING RANGE

IAT sensor voltage [IAT]	0.18 to 4.91 V [-40°C to 140°C (-40°F to 284°F)]

WIRING DIAGRAM

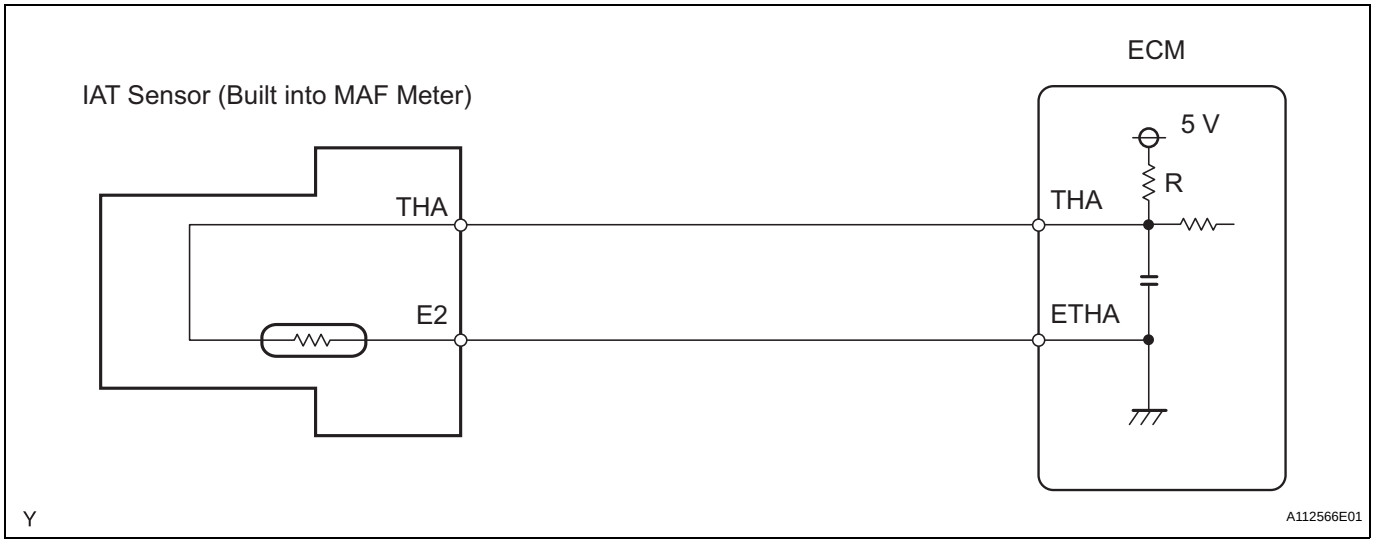

INSPECTION PROCEDURE

HINT:
Read freeze frame data using an intelligent tester. Freeze frame data record the engine condition when malfunctions are detected. When troubleshooting, freeze frame data can help determine if the vehicle was moving or stationary, if the engine was warmed up or not, if the air-fuel ratio was lean or rich, and other data, from the time the malfunction occurred.

1	READ VALUE USING INTELLIGENT TESTER (INTAKE AIR TEMPERATURE)

(a) Connect an intelligent tester to the DLC3.
(b) Turn the ignition switch to ON.
(c) Turn the tester ON.
(d) Select the following menu items: DIAGNOSIS / ENHANCED OBD II / DATA LIST / PRIMARY / INTAKE AIR.
(e) Read the value displayed on the tester.
Standard:
Same as actual Intake Air Temperature (IAT).

Result

Temperature Displayed	Proceed To
-40 °C (-40°F)	A
140°C (284°F) or higher	B
Same as actual IAT	C

HINT:
- If there is an open circuit, the intelligent tester indicates -40°C (-40°F).
- If there is a short circuit, the intelligent tester indicates 140°C (284°F) or higher.

B	Go to step 4
C	CHECK FOR INTERMITTENT PROBLEMS

ES

A

2 READ VALUE USING INTELLIGENT TESTER (CHECK FOR OPEN IN WIRE HARNESS)

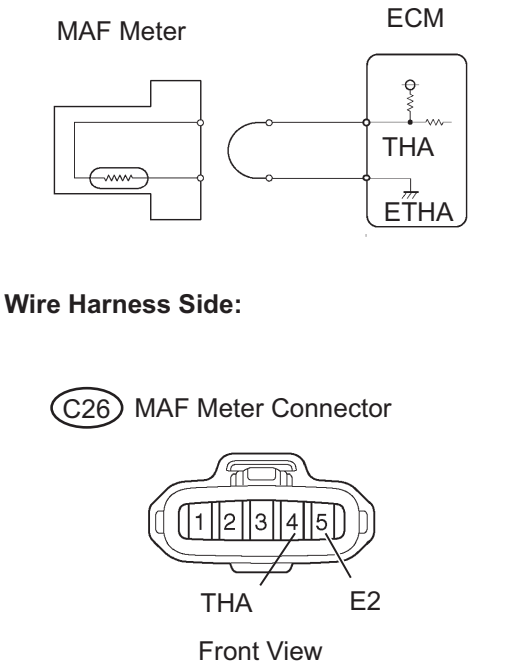

(a) Disconnect the C26 Mass Air Flow (MAF) meter connector.
(b) Connect terminals THA and E2 of the MAF meter wire harness side connector.
(c) Connect the intelligent tester to the DLC3.
(d) Turn the ignition switch to ON.
(e) Turn the tester ON.
(f) Select the following menu items: DIAGNOSIS / ENHANCED OBD II / DATA LIST / PRIMARY / INTAKE AIR.
(g) Read the value displayed on the tester.
Standard:
140°C (284°F) or higher
(h) Reconnect the MAF meter connector.

OK → **CONFIRM GOOD CONNECTION TO SENSOR. IF OK, REPLACE MASS AIR FLOW METER**

NG

3 CHECK HARNESS AND CONNECTOR (MASS AIR FLOW METER - ECM)

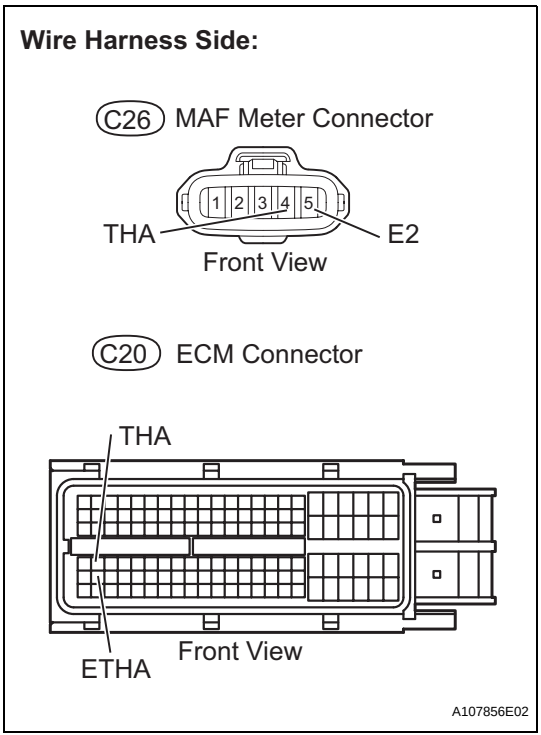

(a) Disconnect the C26 MAF meter connector.
(b) Disconnect the C20 ECM connector.
(c) Check the resistance.
Standard resistance

Tester Connections	Specified Conditions
THA (C26-4) - THA (C20-65)	Below 1 Ω
E2 (C26-5) - ETHA (C20-88)	

(d) Reconnect the MAF meter connector.
(e) Reconnect the ECM connector.

NG → **REPAIR OR REPLACE HARNESS OR CONNECTOR**

OK

CONFIRM GOOD CONNECTION TO ECM. IF OK, REPLACE ECM

4 READ VALUE USING INTELLIGENT TESTER (CHECK FOR SHORT IN WIRE HARNESS)

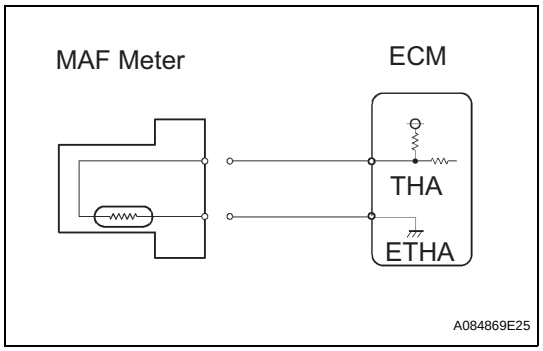

(a) Disconnect the C26 MAF meter connector.
(b) Connect the intelligent tester to the DLC3.
(c) Turn the ignition switch to ON.
(d) Turn the tester ON.
(e) Select the following menu items: DIAGNOSIS / ENHANCED OBD II / DATA LIST / PRIMARY / INTAKE AIR.
(f) Read the value displayed on the tester.
Standard:
-40°C (-40°F)
(g) Reconnect the MAF meter connector.

OK → **REPLACE MASS AIR FLOW METER**

NG

5 CHECK HARNESS AND CONNECTOR (MASS AIR FLOW METER - ECM)

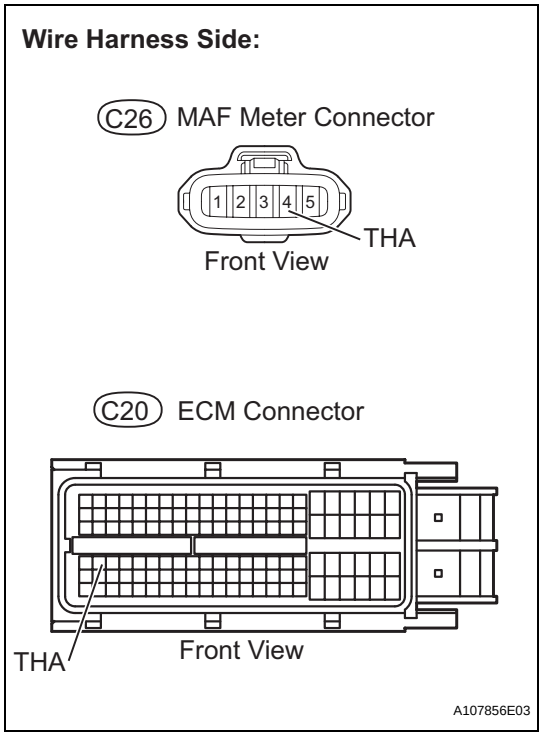

(a) Disconnect the C26 MAF meter connector.
(b) Disconnect the C20 ECM connector.
(c) Check the resistance.
Standard resistance

Tester Connections	Specified Conditions
THA (C26-4) or THA (C20-65) - Body ground	10 kΩ or higher

(d) Reconnect the MAF meter connector.
(e) Reconnect the ECM connector.

NG → **REPAIR OR REPLACE HARNESS OR CONNECTOR**

OK

REPLACE ECM

ES

DTC	P0115	Engine Coolant Temperature Circuit Malfunction

DTC	P0117	Engine Coolant Temperature Circuit Low Input

DTC	P0118	Engine Coolant Temperature Circuit High Input

DESCRIPTION

A thermistor is built into the Engine Coolant Temperature (ECT) sensor, of which the resistance value varies according to the ECT.

ES

The structure of the sensor and its connection to the ECM are the same as those of the Intake Air Temperature (IAT) sensor.

HINT:

When any of DTCs P0115, P0117 and P0118 are set, the ECM enters fail-safe mode. During fail-safe mode, the ECT is estimated to be 80°C (176°F) by the ECM. Fail-safe mode continues until a pass condition is detected.

DTC No.	Proceed To	DTC Detection Conditions	Trouble Areas
P0115	Step 1	Open or short in ECT sensor circuit for 0.5 seconds (1 trip detection logic)	• Open or short in ECT sensor circuit • ECT sensor • ECM
P0117	Step 4	Short in ECT sensor circuit for 0.5 seconds (1 trip detection logic)	• Short in ECT sensor • ECT sensor • ECM
P0118	Step 2	Open in ECT sensor circuit for 0.5 seconds (1 trip detection logic)	• Open in ECT sensor circuit • ECT sensor • ECM

HINT:

When any of these DTCs are set, check the ECT by selecting the following menu items on an intelligent tester: DIAGNOSIS / ENHANCED OBD II / DATA LIST / PRIMARY / COOLANT TEMP.

Temperature Displayed	Malfunctions
-40°C (-40°F)	Open circuit
140°C (284°F) or higher	Short circuit

MONITOR DESCRIPTION

The Engine Coolant Temperature (ECT) sensor is used to monitor the ECT. The ECT sensor has a thermistor with a resistance that varies according to the temperature of the engine coolant. When the coolant temperature is low, the resistance in the thermistor increases. When the temperature is high, the resistance drops. These variations in resistance are reflected in the output voltage from the sensor. The ECM monitors the sensor voltage and uses this value to calculate the ECT. When the sensor output voltage deviates from the normal operating range, the ECM interprets this as a fault in the ECT sensor and sets a DTC.

Example:

If the sensor output voltage is more than 4.91 V for 0.5 seconds or more, the ECM determines that there is an open in the ECT sensor circuit, and sets DTC P0118. Conversely, if the voltage output is less than 0.14 V for 0.5 seconds or more, the ECM determines that there is a short in the sensor circuit, and sets DTC P0117.

If the malfunction is not repaired successfully, a DTC is set 0.5 seconds after the engine is next started.

MONITOR STRATEGY

Related DTCs	P0115: ECT sensor range check (Fluctuating) P0117: ECT sensor range check (Low voltage) P0118: ECT sensor range check (High voltage)
Required Sensors/Components (Main)	ECT sensor
Required Sensors/Components (Related)	-
Frequency of Operation	Continuous
Duration	0.5 seconds
MIL Operation	Immediate
Sequence of Operation	None

TYPICAL ENABLING CONDITIONS

Monitor runs whenever following DTCs not present	None

TYPICAL MALFUNCTION THRESHOLDS

P0115:

ECT sensor voltage	Less than 0.14 V, or more than 4.91 V

P0117:

ECT sensor voltage [ECT]	Less than 0.14 V [More than 140°C (284°F)]

P0118:

ECT sensor voltage [ECT]	More than 4.91 V [Less than -40°C (-40°F)]

COMPONENT OPERATING RANGE

ECT sensor voltage [ECT]	0.14 to 4.91 V [-40°C to 140°C (-40°F to 284°F)]

WIRING DIAGRAM

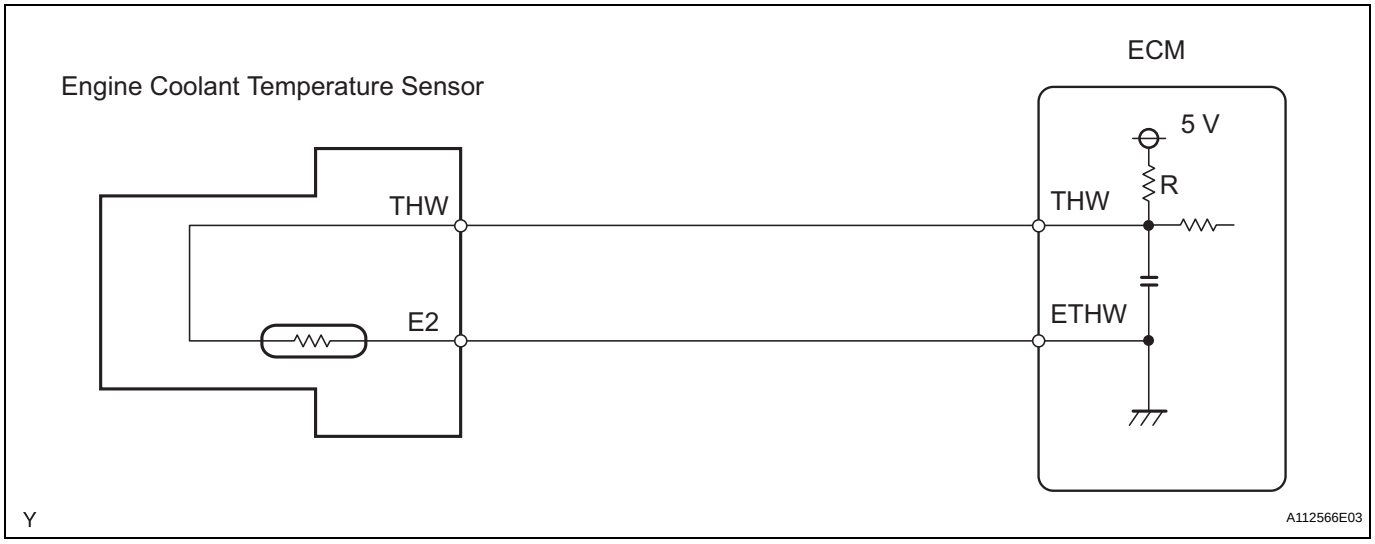

INSPECTION PROCEDURE

HINT:
Read freeze frame data using an intelligent tester. Freeze frame data record the engine condition when malfunctions are detected. When troubleshooting, freeze frame data can help determine if the vehicle was moving or stationary, if the engine was warmed up or not, if the air-fuel ratio was lean or rich, and other data, from the time the malfunction occurred.

1	READ VALUE USING INTELLIGENT TESTER (ENGINE COOLANT TEMPERATURE)

ES

(a) Connect an intelligent tester to the DLC3.
(b) Turn the ignition switch to ON.
(c) Turn the tester ON.
(d) Select the following menu items: DIAGNOSIS / ENHANCED OBD II / DATA LIST / PRIMARY / COOLANT TEMP.
(e) Read the value displayed on the tester.
Standard:
75°C to 100°C (167°F to 212°F) with warm engine.

Result

Temperature Displayed	Proceed To
-40°C (-40°F)	A
140°C (284°F) or higher	B
75°C to 100°C (167°F to 212°F)	C

HINT:
- If there is an open circuit, the intelligent tester indicates -40°C (-40°F).
- If there is a short circuit, the intelligent tester indicates 140°C (284°F) or higher.

B → **Go to step 4**

C → **CHECK FOR INTERMITTENT PROBLEMS**

A

2	READ VALUE USING INTELLIGENT TESTER (CHECK FOR OPEN IN WIRE HARNESS)

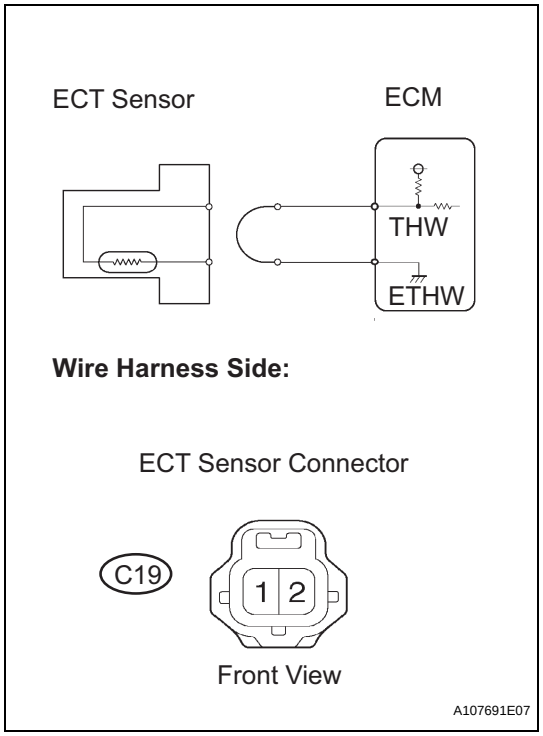

(a) Disconnect the C19 Engine Coolant Temperature (ECT) sensor connector.
(b) Connect terminals 1 and 2 of the ECT sensor connector on the wire harness side.
(c) Connect the intelligent tester to the DLC3.
(d) Turn the ignition switch to ON.
(e) Turn the tester ON.
(f) Select the following menu items: DIAGNOSIS / ENHANCED OBD II / DATA LIST / PRIMARY / COOLANT TEMP.
(g) Read the value displayed on the tester.
Standard:
140°C (284°F) or higher.
(h) Reconnect the ECT sensor connector.

OK → **CONFIRM GOOD CONNECTION TO SENSOR. IF OK, REPLACE ENGINE COOLANT TEMPERATURE SENSOR**

NG

3	CHECK HARNESS AND CONNECTOR (ENGINE COOLANT TEMPERATURE SENSOR - ECM)

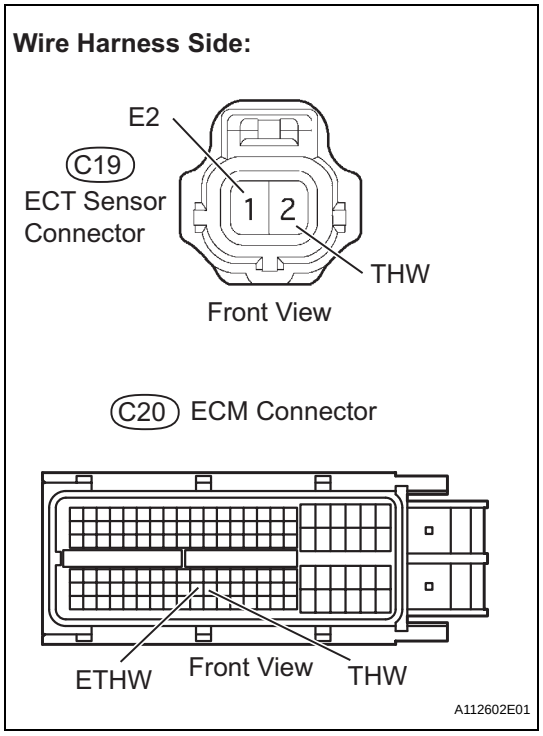

(a) Disconnect the C19 ECT sensor connector.
(b) Disconnect the C20 ECM connector.
(c) Check the resistance.
Standard resistance

Tester Connections	Specified Conditions
THW (C19-2) - THW (C20-97)	Below 1 Ω
E2 (C19-1) - ETHW (C20-96)	

(d) Reconnect the ECT sensor connector.
(e) Reconnect the ECM connector.

NG → **REPAIR OR REPLACE HARNESS OR CONNECTOR**

ES

OK

GOOD CONNECTION TO ECM. IF OK, REPLACE ECM

4	READ VALUE USING INTELLIGENT TESTER (CHECK FOR SHORT IN WIRE HARNESS)

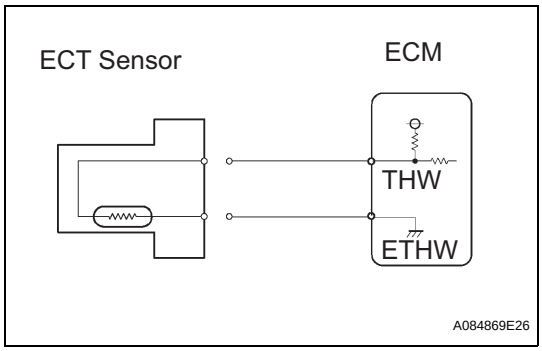

(a) Disconnect the C19 ECT sensor connector.
(b) Connect the intelligent tester to the DLC3.
(c) Turn the ignition switch to ON.
(d) Turn the tester ON.
(e) Select the following menu items: DIAGNOSIS / ENHANCED OBD II / DATA LIST / PRIMARY / COOLANT TEMP.
(f) Read the value displayed on the tester.
Standard:
-40°C (-40°F)
(g) Reconnect the ECT sensor connector.

OK → **REPLACE ENGINE COOLANT TEMPERATURE SENSOR**

NG

5	CHECK HARNESS AND CONNECTOR (ENGINE COOLANT TEMPERATURE SENSOR - ECM)

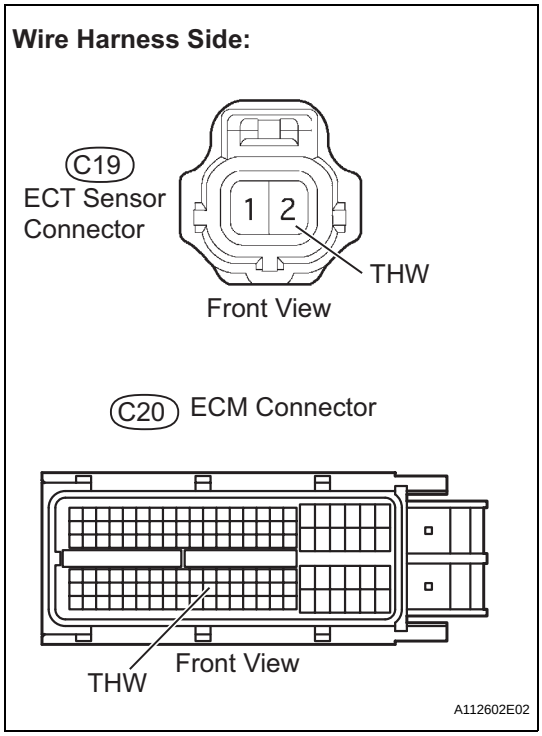

(a) Disconnect the C19 ECT sensor connector.
(b) Disconnect the C20 ECM connector.
(c) Check the resistance.
Standard resistance

Tester Connections	Specified Conditions
THW (C19-2) or THW (C20-97) - Body ground	10 kΩ or higher

(d) Reconnect the ECT sensor connector.
(e) Reconnect the ECM connector.

NG → **REPAIR OR REPLACE HARNESS OR CONNECTOR**

OK

REPLACE ECM

DTC	P0116	Engine Coolant Temperature Circuit Range / Performance Problem

DESCRIPTION

Refer to DTC P0115 (See page ES-95).

DTC No.	DTC Detection Conditions	Trouble Areas
P0116	When either of following conditions met (2 trip detection logic): • When cold engine started and engine warmed up, Engine Coolant Temperature (ECT) sensor value does not change. • After warmed up engine started, if ECT sensor value does not change when engine stopped and then next cold engine start performed, it determined that malfunction has occurred.	• Thermostat • ECT sensor

MONITOR DESCRIPTION

Engine coolant temperature (ECT) sensor cold start monitor

When a cold engine start is performed and then the engine is warmed up, if the ECT sensor value does not change, it is determined that a malfunction has occurred. If this is detected in 2 consecutive driving cycles, the MIL is illuminated and a DTC is set.

ECT sensor soak monitor

After a warmed up engine is started, if the ECT sensor value does not change when the engine is stopped and then the next cold engine start is performed, it is determined that a malfunction has occurred. If this is detected in 2 consecutive driving cycles, the MIL is illuminated and a DTC is set.

MONITOR STRATEGY

Related DTCs	P0116: Engine coolant temperature (ECT) sensor cold start monitor P0116: ECT sensor soak monitor
Required Sensors/Components (Main)	ECT sensor
Required Sensors/Components (Related)	None
Frequency of Operation	Once per driving cycle
Duration	180 seconds or more
MIL Operation	2 driving cycles
Sequence of Operation	None

TYPICAL ENABLING CONDITIONS

ECT Sensor cold start monitor:

Monitor runs whenever following DTCs not present	P0100 to P0103: Mass Air Flow (MAF) meter P0110 to P0113: Intake Air Temperature (IAT) sensor
Battery voltage	10.5 V or more
Time after engine start	1 second or more
ECT at engine start	Less than 60°C (140°F)
IAT sensor circuit	OK
Soak time	5 hours or more
Accumulated MAF	498.77 g or more
Engine	Running
Fuel cut	OFF
Difference between ECT at engine start and IAT	Less than 40°C (72°F)

ECT Sensor soak monitor:

Monitor runs whenever following DTCs not present	P0100 to P0103: MAF meter P0110 to P0113: IAT sensor
Battery voltage	10.5 V or more
Engine	Running
Soak time	5 hours or more
Either (a) or (b) condition met	-
(a) ECT	60°C (140°F) or more
(b) Accumulated MAF	862.59 g or more

TYPICAL MALFUNCTION THRESHOLDS

ECT Sensor cold start monitor:

ECT sensor value change	Less than 5°C (9°F)

ECT Sensor soak monitor:

Difference between current ECT sensor value and previous ECT sensor value when engine stopped	Less than 5°C (9°F)

COMPONENT OPERATING RANGE

ECT	ECT sensor value changes in accordance with actual ECT

INSPECTION PROCEDURE

HINT:

- If any of DTCs P0115, P0117, P0118 or P0125 are set simultaneously with DTC P0116, the ECT sensor may have an open or a short circuit. Troubleshoot those DTCs first.
- Read freeze frame data using an intelligent tester. Freeze frame data record the engine condition when malfunctions are detected. When troubleshooting, freeze frame data can help determine if the vehicle was moving or stationary, if the engine was warmed up or not, if the air-fuel ratio was lean or rich, and other data, from the time the malfunction occurred.

1 CHECK ANY OTHER DTCS OUTPUT (IN ADDITION TO DTC P0116)

(a) Connect an intelligent tester to the DLC3.
(b) Turn the ignition switch to ON.
(c) Turn the tester ON.
(d) Select the following menu items: DIAGNOSIS / ENHANCED II / DTC INFO / CURRENT CODES.
(e) Read the DTC.

Result

Display (DTC Output)	Proceed To
P0116	A
P0116 and other DTCs	B

B → **GO TO DTC CHART**

A

2 INSPECT THERMOSTAT

(a) Remove the thermostat (See page CO-18).

(b) Check the valve opening temperature of the thermostat.
Standard:
80°C to 84°C (176°F to 183°F)
HINT:
In addition to the above check, confirm that the valve is completely closed when the temperature is below the standard.

(c) Reinstall the thermostat (See page CO-19).

NG → **REPLACE THERMOSTAT**

OK

ES

REPLACE ENGINE COOLANT TEMPERATURE SENSOR

DTC	P0120	Throttle / Pedal Position Sensor / Switch "A" Circuit Malfunction
DTC	P0122	Throttle / Pedal Position Sensor / Switch "A" Circuit Low Input
DTC	P0123	Throttle / Pedal Position Sensor / Switch "A" Circuit High Input
DTC	P0220	Throttle / Pedal Position Sensor / Switch "B" Circuit
DTC	P0222	Throttle / Pedal Position Sensor / Switch "B" Circuit Low Input
DTC	P0223	Throttle / Pedal Position Sensor / Switch "B" Circuit High Input
DTC	P2135	Throttle / Pedal Position Sensor / Switch "A" / "B" Voltage Correlation

HINT:
These DTCs relate to the Throttle Position (TP) sensor.

DESCRIPTION

The TP sensor is mounted on the throttle body, and detects the opening angle of the throttle valve. This sensor is a non-contact type, and uses Hall-effect elements, in order to yield accurate signals, even in extreme driving conditions, such as at high speeds as well as very low speeds.
The TP sensor has two sensor circuits which each transmits a signal, VTA1 and VTA2. VTA1 is used to detect the throttle valve angle and VTA2 is used to detect malfunctions in VTA1. The sensor signal voltages vary between 0 V and 5 V in proportion to the throttle valve opening angle, and are transmitted to the VTA terminals of the ECM.
As the valve closes, the sensor output voltage decreases and as the valve opens, the sensor output voltage increases. The ECM calculates the throttle valve opening angle according to these signals and controls the throttle actuator in response to driver inputs. These signals are also used in calculations such as air-fuel ratio correction, power increase correction and fuel-cut control.

ES

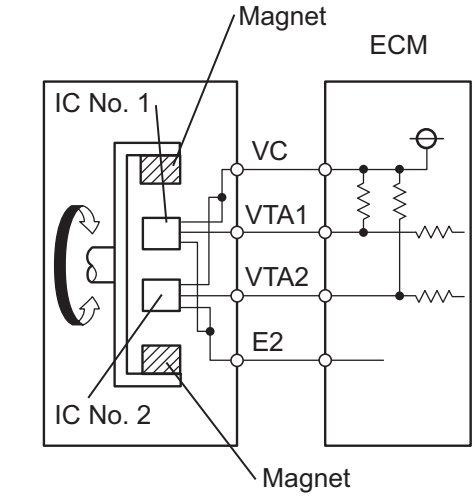

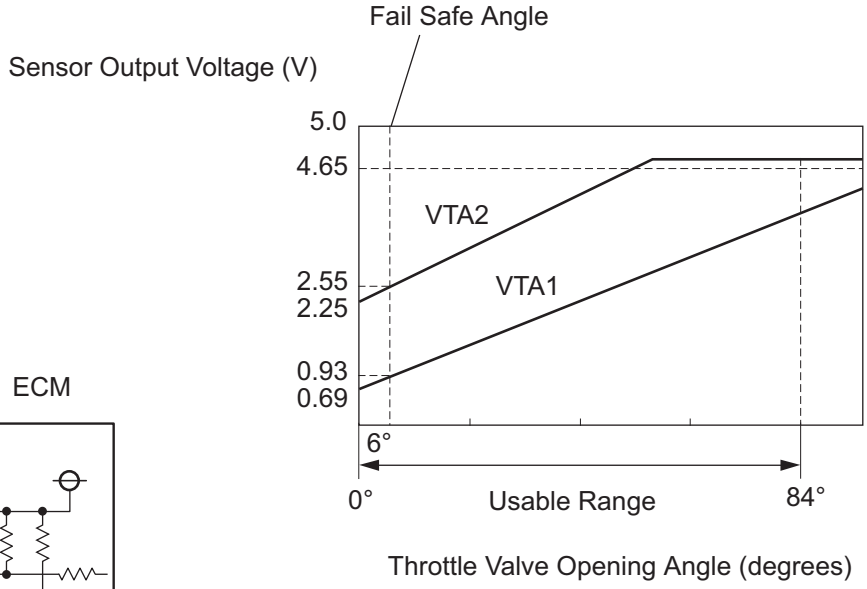

Note:

The throttle valve opening angle detected by the sensor terminal VTA1 is expressed as a percentage.

Between 10 % and 22 %: Throttle valve fully closed

Between 66 % and 98 %: Throttle valve fully open

Approximately 19 %: Fail-safe angle (6°)

Y

A122559E02

DTC No.	DTC Detection Conditions	Trouble Areas
P0120	Output voltage of VTA1 quickly fluctuates beyond lower and upper malfunction thresholds for 2 seconds when accelerator pedal depressed (1 trip detection logic)	• Throttle Position (TP) sensor (built into throttle body) • ECM
P0122	Output voltage of VTA1 0.2 V or less for 2 seconds when accelerator pedal depressed (1 trip detection logic)	• TP sensor (built into throttle body) • Short in VTA1 circuit • Open in VC circuit • ECM
P0123	Output voltage of VTA1 4.535 V or more for 2 seconds when accelerator pedal depressed (1 trip detection logic)	• TP sensor (built into throttle body) • Open in VTA1 circuit • Open in E2 circuit • Short between VC and VTA1 circuits • ECM
P0220	Output voltage of VTA2 quickly fluctuates beyond lower and upper malfunction thresholds for 2 seconds when accelerator pedal depressed (1 trip detection logic)	• TP sensor (built into throttle body) • ECM

DTC No.	DTC Detection Conditions	Trouble Areas
P0222	Output voltage of VTA2 1.75 V or less for 2 seconds when accelerator pedal depressed (1 trip detection logic)	• TP sensor (built into throttle body) • Short in VTA2 circuit • Open in VC circuit • ECM
P0223	Output voltage of VTA2 4.8 V or more, and VTA1 between 0.2 V and 2.02 V for 2 seconds when accelerator pedal depressed (1 trip detection logic)	• TP sensor (built into throttle body) • Open in VTA2 circuit • Open in E2 circuit • Short between VC and VTA2 circuits • ECM
P2135	Either condition (a) or (b) met (1 trip detection logic): (a) Difference between output voltages of VTA1 and VTA2 0.02 V or less for 0.5 seconds or more (b) Output voltage of VTA1 0.2 V or less, and VTA2 1.75 V or less, for 0.4 seconds or more	• Short between VTA1 and VTA2 circuits • TP sensor (built into throttle body) • ECM

ES

HINT:
- When any of these DTCs are set, check the throttle valve opening angle by selecting the following menu items on an intelligent tester: DIAGNOSIS / ENHANCED OBD II / DATA LIST / ETCS / THROTTLE POS #1 AND THROTTLE POS #2.
- THROTTLE POS #1 denotes the VTA1 signal, and THROTTLE POS #2 denotes the VTA2 signal.

Reference (Normal Condition)

Tester Display	Accelerator Pedal Fully Released	Accelerator Pedal Fully Depressed
THROTTLE POS #1	**0.5 to 1.1 V**	**3.3 to 4.9 V**
THROTTLE POS #2	**2.1 to 3.1 V**	**4.6 to 5.0 V**

MONITOR DESCRIPTION

The ECM uses the Throttle Position (TP) sensor to monitor the throttle valve opening angle. There are several checks that the ECM performs to confirm the proper operation of the TP sensor.
- A specific voltage difference is expected between the sensor terminals, VTA1 and VTA2, for each throttle valve opening angle. If the difference between VTA1 and VTA2 is incorrect, the ECM interprets this as a malfunction in the sensor, and sets a DTC.
- VTA1 and VTA2 each have a specific voltage range. If VTA1 or VTA2 is outside the normal operating range, the ECM interprets this as a malfunction in the sensor, and sets a DTC.
- VTA1 and VTA2 should never be close to the same voltage level. If VTA1 is within 0.02 V of VTA2, the ECM determines that there is a short circuit in the sensor, and sets a DTC.

If the malfunction is not repaired successfully, a DTC is set 10 seconds after the engine is next started.

MONITOR STRATEGY

Related DTCs	P0120: Throttle position sensor 1 range check (Fluctuating) P0122: Throttle position sensor 1 range check (Low voltage) P0123: Throttle position sensor 1 range check (High voltage) P0220: Throttle position sensor 2 range check (Fluctuating) P0222: Throttle position sensor 2 range check (Low voltage) P0223: Throttle position sensor 2 range check (High voltage) P2135: Throttle position sensor range check (Correlation)
Required Sensors/Components (Main)	Throttle position sensor
Required Sensors/Components (Related)	-
Frequency of Operation	Continuous
Duration	2 seconds: P0120, P0122, P0123, P0220, P0222 and P0223 (Accelerator pedal ON) 10 seconds: P0120, P0122, P0123, P0220, P0222 and P0223 (Accelerator pedal OFF) 0.5 seconds: P2135 Case 1 0.4 seconds: P2135 Case 2
MIL Operation	Immediate
Sequence of Operation	None

TYPICAL ENABLING CONDITIONS

Monitor runs whenever following DTCs not present	None
Either of following condition A or B met	-
A. Ignition switch ON	0.012 seconds or more
B. Electronic throttle actuator power	ON

TYPICAL MALFUNCTION THRESHOLDS

P0120:

VTA1 voltage	0.2 V or less, or 4.535 V or more

P0122:

VTA1 voltage	0.2 V or less

P0123:

VTA1 voltage	4.535 V or more

P0220:

VTA2 voltage	1.75 V or less, or 4.8 V or more

P0222:

VTA2 voltage	1.75 V or less

P0223:

VTA2 voltage when VTA1 0.2 V or more, and 2.02 V or less	4.8 V or more

P2135 Case 1:

Difference between VTA1 and VTA2 voltages	0.02 V or less

P2135 Case 2:

VTA1 voltage	0.2 V or less
VTA2 voltage	1.75 V or less

COMPONENT OPERATING RANGE

VTA1 voltage	0.69 to 4.05 V
VTA2 voltage	2.25 to 4.8 V

FAIL-SAFE

When any of these DTCs, as well as other DTCs relating to ETCS (Electronic Throttle Control System) malfunctions, are set, the ECM enters fail-safe mode. During fail-safe mode, the ECM cuts the current to the throttle actuator off, and the throttle valve is returned to a 6° throttle angle by the return spring. The ECM then adjusts the engine output by controlling the fuel injection (intermittent fuel-cut) and ignition timing, in accordance with the accelerator pedal opening angle, to allow the vehicle to continue at a minimal speed. If the accelerator pedal is depressed firmly and gently, the vehicle can be driven slowly. Fail-safe mode continues until a pass condition is detected, and the ignition switch is then turned to OFF.

WIRING DIAGRAM

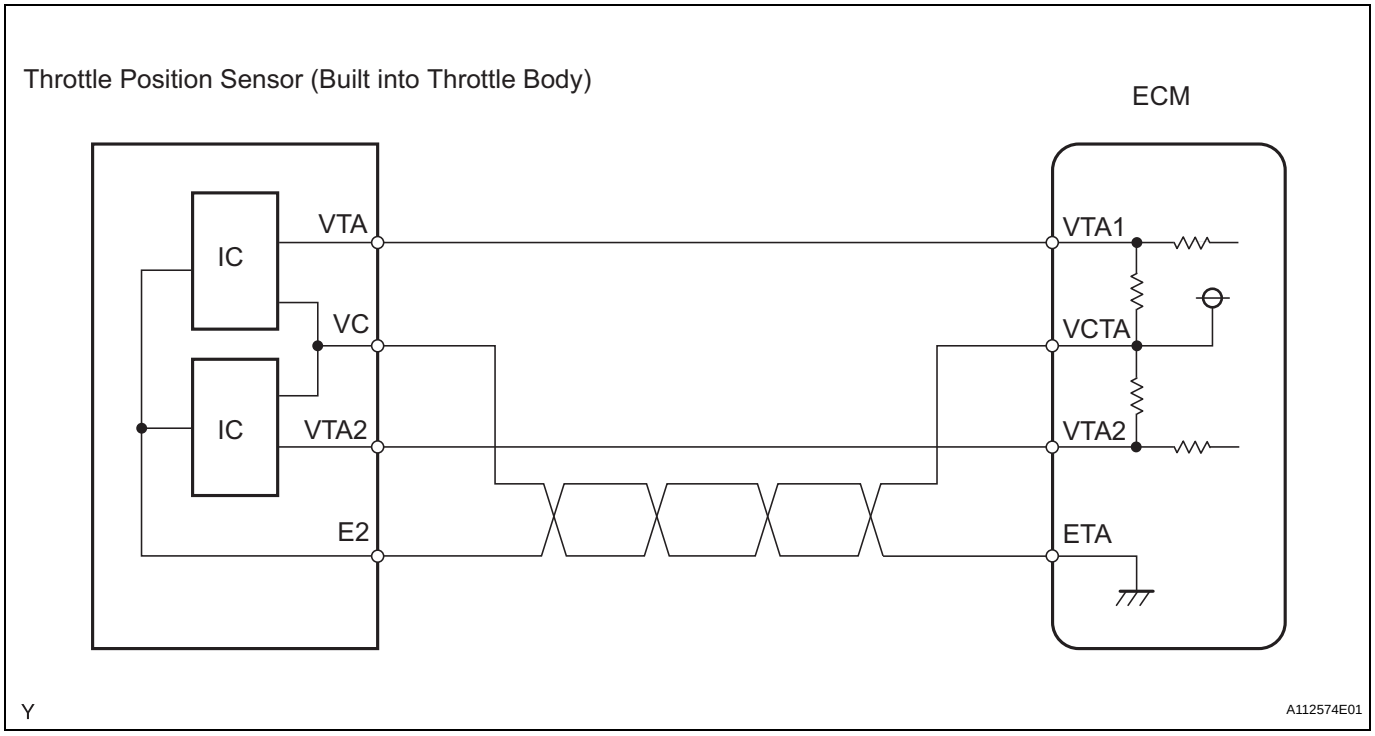

INSPECTION PROCEDURE

HINT:

Read freeze frame data using an intelligent tester. Freeze frame data record the engine condition when malfunctions are detected. When troubleshooting, freeze frame data can help determine if the vehicle was moving or stationary, if the engine was warmed up or not, if the air-fuel ratio was lean or rich, and other data, from the time the malfunction occurred.

1	READ VALUE USING INTELLIGENT TESTER (THROTTLE POS #1 AND THROTTLE POS #2)

(a) Connect an intelligent tester to the DLC3.
(b) Turn the ignition switch to ON and turn the tester ON.
(c) Select the following menu items: DIAGNOSIS / ENHANCED OBD II / DATA LIST / ETCS / THROTTLE POS #1 and THROTTLE POS #2.
(d) Check the values displayed on the tester.

Result

TP#1 (VTA1) When Accelerator Pedal Released	TP#2 (VTA2) When Accelerator Pedal Released	TP#1 (VTA1) When Accelerator Pedal Depressed	TP#2 (VTA2) When Accelerator Pedal Depressed	Trouble Areas	Proceed To
0 V to 0.2 V	0 V to 0.2 V	0 V to 0.2 V	0 V to 0.2 V	VC circuit open	A
4.5 V to 5.0 V	4.5 V to 5.0 V	4.5 V to 5.0 V	4.5 V to 5.0 V	E2 circuit open	
0 V to 0.2 V, or 4.5 V to 5.0 V	2.4 V to 3.4 V (Fail-safe)	0 V to 0.2 V, or 4.5 V to 5.0 V	2.4 V to 3.4 V (Fail-safe)	VTA1 circuit open or ground short	
0.7 V to 1.3 V (Fail-safe)	0 V to 0.2 V, or 4.5 V to 5.0 V	0.7 V to 1.3 V (Fail-safe)	0 V to 0.2 V, or 4.5 V to 5.0 V	VTA2 circuit open or ground short	
0.5 V to 1.1 V	2.1 V to 3.1 V	3.3 V to 4.9 V (Not fail-safe)	4.6 V to 5.0 V (Not fail-safe)	TP sensor circuit normal	B

ES

HINT:
TP#1 denotes THROTTLE POS #1, and TP#2 denotes THROTTLE POS #2.

B → **Go to step 5**

A

2 CHECK HARNESS AND CONNECTOR (THROTTLE POSITION SENSOR - ECM)

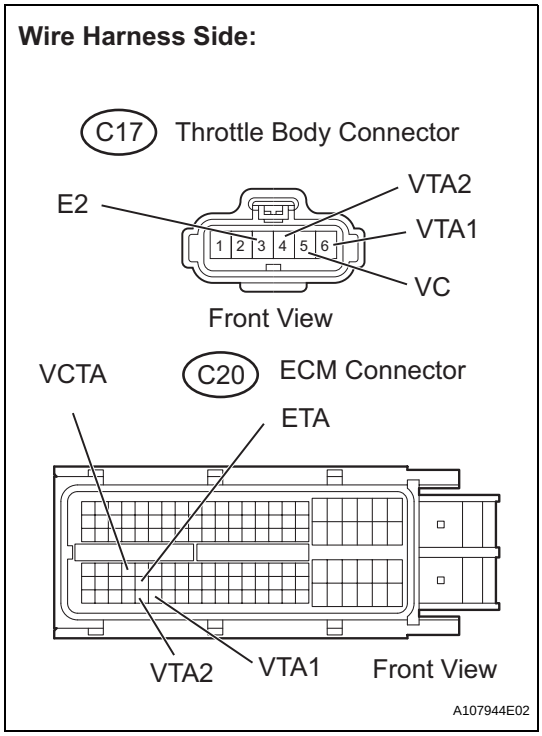

(a) Disconnect the C17 throttle body connector.
(b) Disconnect the C20 ECM connector.
(c) Check the resistance.

Standard resistance (Check for open)

Tester Connections	Specified Conditions
VC (C17-5) - VCTA (C20-67)	Below 1 Ω
VTA (C17-6) - VTA1 (C20-115)	
VTA2 (C17-4) - VTA2 (C20-114)	
E2 (C17-3) - ETA (C20-91)	

Standard resistance (Check for short)

Tester Connections	Specified Conditions
VC (C17-5) or VCTA (C20-67) - Body ground	10 kΩ or higher
VTA (C17-6) or VTA1 (C20-115) - Body ground	
VTA2 (C17-4) or VTA2 (C20-114) - Body ground	

(d) Reconnect the throttle body connector.
(e) Reconnect the ECM connector.

NG → **REPAIR OR REPLACE HARNESS OR CONNECTOR**

OK

3 INSPECT ECM (VC VOLTAGE)

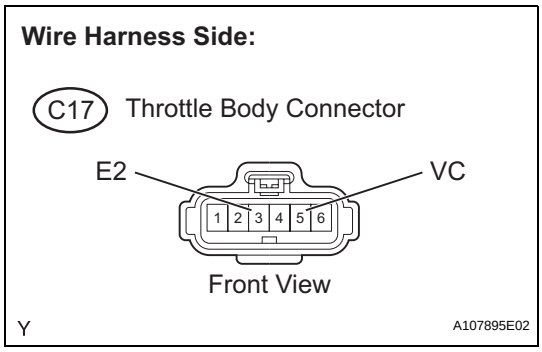

(a) Disconnect the C17 throttle body connector.
(b) Turn the ignition switch to ON.
(c) Measure the voltage between the terminals of the throttle body connector.

Standard voltage

Tester Connections	Specified Conditions
VC (C17-5) - E2 (C17-3)	4.5 to 5.5 V

(d) Reconnect the throttle body connector.

NG → **REPLACE ECM**

OK

4	REPLACE THROTTLE BODY ASSEMBLY

NEXT

5	CHECK WHETHER DTC OUTPUT RECURS (THROTTLE POSITION SENSOR DTCS)

(a) Connect the intelligent tester to the DLC3.
(b) Turn the ignition switch to ON and turn the tester ON.
(c) Clear DTCs (See page ES-34).
(d) Start the engine.
(e) Allow the engine to idle for 15 seconds or more.
(f) Select the following menu items: DIAGNOSIS / ENHANCED OBD II / DTC INFO / CURRENT CODES.
(g) Read DTCs.

ES

Result

Display (DTC Output)	Proceed To
P0120, P0122, P0123, P0220, P0222, P0223, and/or P2135	A
No output	B

B → SYSTEM OK

A

REPLACE ECM

DTC	P0121	Throttle / Pedal Position Sensor / Switch "A" Circuit Range / Performance Problem

HINT:
This DTC relates to the Throttle Position (TP) sensor.

DESCRIPTION

Refer to DTC P0120 (See page ES-104).

DTC No.	DTC Detection Conditions	Trouble Areas
P0121	Difference between VTA1 and VTA2 voltages less than 0.8 V, or more than 1.6 V for 2 seconds (1 trip detection logic)	TP sensor (built into throttle body)

MONITOR DESCRIPTION

The ECM uses the TP sensor to monitor the throttle valve opening angle.
This sensor transmits two signals: VTA1 and VTA2. VTA1 is used to detect the throttle opening angle and VTA2 is used to detect malfunctions in VTA1. The ECM performs several checks to confirm the proper operation of the TP sensor and VTA1.
For each throttle opening angle, a specific voltage difference is expected between the outputs of VTA1 and VTA2. If the output voltage difference between the two signals deviates from the normal operating range, the ECM interprets this as a malfunction of the TP sensor. The ECM illuminates the MIL and sets the DTC.
If the malfunction is not repaired successfully, the DTC is set 2 seconds after the engine is next started.

MONITOR STRATEGY

Related DTCs	P0121: TP sensor rationality
Required Sensors/Components (Main)	TP sensor
Required Sensors/Components (Related)	-
Frequency of Operation	Continuous
Duration	Within 2 seconds
MIL Operation	Immediate
Sequence of Operation	None

TYPICAL ENABLING CONDITIONS

Monitor runs whenever following DTCs not present	P0120 - P0223, P2135 (TP sensor)
Either of following conditions A or B set	-
A. Ignition switch	ON
B. Electric throttle motor power	ON

TYPICAL MALFUNCTION THRESHOLDS

Difference in voltage between VAT1 and VTA2 TP sensor 1 - [TP sensor 2 x 0.8 (corrected by learning value)]	Less than 0.8 V, or more than 1.6 V

FAIL-SAFE

When this DTC, as well as other DTCs relating to ETCS (Electronic Throttle Control System) malfunctions, is set, the ECM enters fail-safe mode. During fail-safe mode, the ECM cuts the current to the throttle actuator off, and the throttle valve is returned to a 6° throttle angle by the return spring. The ECM then adjusts the engine output by controlling the fuel injection (intermittent fuel-cut) and ignition timing, in accordance with the accelerator pedal opening angle, to allow the vehicle to continue at a minimal speed. If the accelerator pedal is depressed firmly and gently, the vehicle can be driven slowly. Fail-safe mode continues until a pass condition is detected, and the ignition switch is then turned to OFF.

INSPECTION PROCEDURE

HINT:

Read freeze frame data using an intelligent tester. Freeze frame data record the engine condition when malfunctions are detected. When troubleshooting, freeze frame data can help determine if the vehicle was moving or stationary, if the engine was warmed up or not, if the air-fuel ratio was lean or rich, and other data, from the time the malfunction occurred.

1 CHECK ANY OTHER DTCS OUTPUT (IN ADDITION TO DTC P0121)

(a) Connect an intelligent tester to the DLC3.
(b) Turn the ignition switch to ON.
(c) Turn the tester ON.
(d) Select the following menu items: DIAGNOSIS / ENHANCED OBD II / DTC INFO / CURRENT CODES.
(e) Read DTCs.

Result

Display (DTC output)	Proceed To
P0121	A
P0121 and other DTCs	B

B → **GO TO DTC CHART**

A

REPLACE THROTTLE BODY ASSEMBLY

DTC	P0125	Insufficient Coolant Temperature for Closed Loop Fuel Control

DESCRIPTION

Refer to DTC P0115 (See page ES-95).

DTC No.	DTC Detection Conditions	Trouble Areas
P0125	Engine Coolant Temperature (ECT) does not reach closed-loop enabling temperature for 20 minutes (this period varies with engine start ECT) (2 trip detection logic)	• ECT sensor • Cooling system • Thermostat

ES

MONITOR DESCRIPTION

The resistance of the ECT sensor varies in proportion to the actual ECT. The ECT supplies a constant voltage to the sensor and monitors the signal output voltage of the sensor. The signal voltage output varies according to the changing resistance of the sensor. After the engine is started, the ECT is monitored through this signal. If the ECT sensor indicates that the engine is not yet warm enough for closed-loop fuel control, despite a specified period of time having elapsed since the engine was started, the ECM interprets this as a malfunction in the sensor or cooling system and sets the DTC.
Example:
The ECT is 0°C (32°F) at engine start. After about 1 minute running time, the ECT sensor still indicates that the engine is not warm enough to begin closed-loop fuel (air-fuel ratio feedback) control. The ECM interprets this as a malfunction in the sensor or cooling system and sets the DTC.

MONITOR STRATEGY

Related DTCs	P0125: Insufficient engine coolant temperature for closed-loop fuel control
Required Sensors/Components (Main)	Thermostat, cooling system
Required Sensors/Components (Related)	Engine coolant temperature sensor and mass air flow meter
Frequency of Operation	Once per driving cycle
Duration	62 seconds: Engine coolant temperature at engine start -3.3°C (26°F) or more 112 seconds: Engine coolant temperature at engine start -14.5° to -3.3°C (5.9° to 26°F) 20 minutes: Engine coolant temperature at engine start less than -14.5°C (5.9°F)
MIL Operation	2 driving cycles
Sequence of Operation	None

TYPICAL ENABLING CONDITIONS

Monitor runs whenever following DTCs not present	P0100 - P0103 (MAF meter) P0110 - P0113 (IAT sensor) P0115 - P0118 (ECT sensor)
Thermostat fail	Not detected

TYPICAL MALFUNCTION THRESHOLDS

Time until actual engine coolant temperature reaches closed-loop fuel control enabling temperature	62 seconds or more: Engine coolant temperature at engine start -3.3°C (26°F) or more 112 seconds or more: Engine coolant temperature at engine start -14.5° to -3.3°C (5.9° to 26°F) 20 minutes or more: Engine coolant temperature at engine start less than -14.5°C (5.9°F)

WIRING DIAGRAM

Refer to DTC P0115 (See page ES-96).

INSPECTION PROCEDURE

HINT:

- If any of DTCs P0115, P0116, P0117 or P0118 are set simultaneously with DTC P0125, the Engine Coolant Temperature (ECT) sensor may have an open or a short circuit. Troubleshoot those DTCs first.
- Read freeze frame data using an intelligent tester. Freeze frame data record the engine condition when malfunctions are detected. When troubleshooting, freeze frame data can help determine if the vehicle was moving or stationary, if the engine was warmed up or not, if the air-fuel ratio was lean or rich, and other data, from the time the malfunction occurred.

ES

1 CHECK ANY OTHER DTCS OUTPUT (IN ADDITION TO DTC P0125)

(a) Connect an intelligent tester to the DLC3.
(b) Turn the ignition switch to ON.
(c) Turn the tester ON.
(d) Select the following menu items: DIAGNOSIS / ENHANCED OBD II / DTC INFO / CURRENT CODES.
(e) Read DTCs.

Result

Display (DTC Output)	Proceed To
P0125	A
P0125 and other DTCs	B

HINT:
If any DTCs other than P0125 are output, troubleshoot those DTCs first.

B → **GO TO DTC CHART**

A

2 INSPECT THERMOSTAT

(a) Remove the thermostat (See page CO-18).
(b) Check the valve opening temperature of the thermostat.
Standard:
80°C to 84°C (176°F to 183°F)
HINT:
In addition to the above check, confirm that the valve is completely closed when the temperature is below the standard.
(c) Reinstall the thermostat (See page CO-19).

NG → **REPLACE THERMOSTAT**

OK

3	CHECK COOLING SYSTEM

(a) Check for defects in the cooling system that might cause the system to be too cold, such as abnormal radiator fan operation or any modifications.

NG → **REPAIR OR REPLACE COOLING SYSTEM**

OK

REPLACE ENGINE COOLANT TEMPERATURE SENSOR

DTC	P0128	Coolant Thermostat (Coolant Temperature Below Thermostat Regulating Temperature)

HINT:
This DTC relates to the thermostat.

DESCRIPTION

This DTC is set when the Engine Coolant Temperature (ECT) does not reach 75°C (167°F) despite sufficient engine warm-up time having elapsed.

DTC No.	DTC Detection Conditions	Trouble Areas
P0128	Conditions (a), (b) and (c) met for 5 seconds (2 rip detection logic): (a) Cold start (b) Engine warmed up (c) ECT less than 75°C (167°F)	• Thermostat • Cooling system • ECT sensor • ECM

ES

MONITOR DESCRIPTION

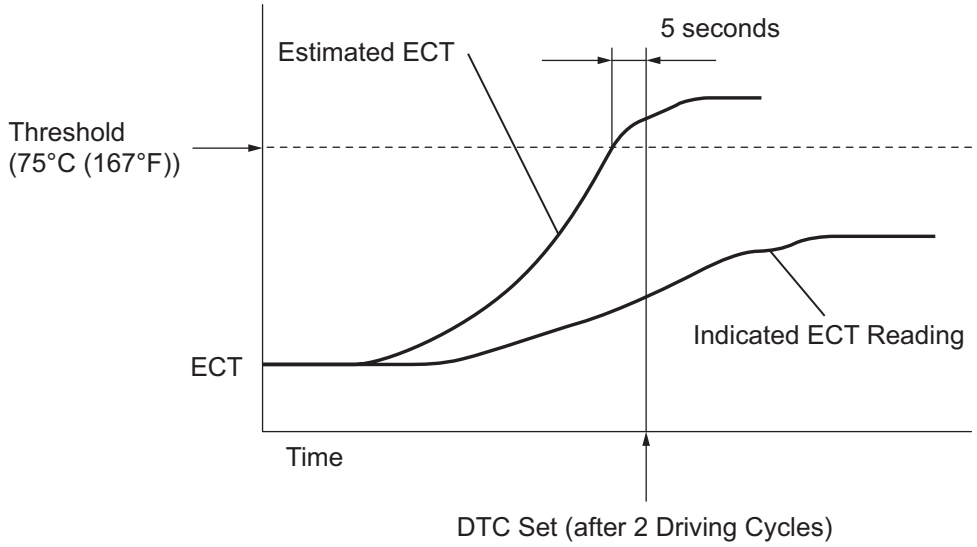

Y A121605E02

The ECM estimates the ECT based on the starting temperature, engine loads, and engine speeds. The ECM then compares the estimated temperature with the actual ECT. When the estimated ECT reaches 75°C (167°F), the ECM checks the actual ECT. If the actual ECT is less than 75°C (167°F), the ECM interprets this as a malfunction in the thermostat or the engine cooling system and sets the DTC.

MONITOR STRATEGY

Related DTCs	P0128: Coolant Thermostat
Required Sensors/Components (Main)	Thermostat

Required Sensors/Components (Related)	Engine Coolant Temperature (ECT) sensor, Intake Air Temperature (IAT) sensor, Vehicle speed sensor
Frequency of Operation	Once per driving cycle
Duration	900 seconds
MIL Operation	2 driving cycles
Sequence of Operation	None

TYPICAL ENABLING CONDITIONS

Monitor runs whenever following DTCs not present	P0010 (VVT OCV) P0011 (VVT System 1 - Advance) P0012 (VVT System 1 - Retard) P0031, P0032 (A/F sensor heater - Sensor 1) P0100 - P0103 (MAF meter) P0110 - P0113 (IAT sensor) P0115 - P0118 (ECT sensor) P0125 (Insufficient ECT for Closed Loop) P0171, P0172 (Fuel system) P0300 - P0304 (Misfire) P0335 (CKP sensor) P0340 (CMP sensor) P0351 - P0354 (Ignitor) P0500 (VSS) P2196 (A/F sensor - rationality) P2A00 (A/F sensor - slow response)
Battery voltage	11 V or more
Either of following conditions 1 or 2 met:	-
1. All of following conditions met:	-
• ECT at engine start - IAT at engine start	-15°C to 7°C (-27°F to 12.6°F)
• ECT at engine start	-10°C to 56°C (14°F to 133°F)
• IAT at engine start	-10°C to 56°C (14°F to 133°F)
2. All of following conditions met:	-
• ECT at engine start - IAT at engine start	More than 7°C (12.6 °F)
• ECT at engine start	56°C (133°F) or less
• IAT at engine start	-10°C (14°F) or more
Accumulated time at 80 mph (128 km/h) or more of vehicle speed	Less than 20 seconds

TYPICAL MALFUNCTION THRESHOLDS

Duration that both following conditions (a) and (b) met	5 seconds or more
(a) Estimated ECT	75°C (167°F) or more
(b) ECT sensor output	Below 75°C (167°F)

INSPECTION PROCEDURE

HINT:
Read freeze frame data using an intelligent tester. Freeze frame data record the engine condition when malfunctions are detected. When troubleshooting, freeze frame data can help determine if the vehicle was moving or stationary, if the engine was warmed up or not, if the air-fuel ratio was lean or rich, and other data, from the time the malfunction occurred.

1	CHECK ANY OTHER DTCS OUTPUT (IN ADDITION TO DTC P0128)

(a) Connect an intelligent tester to the DLC3.
(b) Turn the ignition switch to ON.
(c) Turn the tester ON.

(d) Select the following menu items: DIAGNOSIS / ENHANCED OBD II / DTC INFO / CURRENT CODES.
(e) Read DTCs.

Result

Display (DTC Output)	Proceed To
P0128	A
P0128 and other DTCs	B

HINT:
If any DTCs other than P0128 are output, troubleshoot those DTCs first.

B → **GO TO DTC CHART**

A

2 CHECK COOLING SYSTEM

(a) Check for defects in the cooling system that might cause the system to be too cold, such as abnormal radiator fan operation or any modifications.

NG → **REPAIR OR REPLACE COOLING SYSTEM**

OK

3 INSPECT THERMOSTAT

(a) Remove the thermostat (See page CO-18).
(b) Check the valve opening temperature of the thermostat.
Standard:
80°C to 84°C (176°F to 183°F)
HINT:
In addition to the above check, confirm that the valve is completely closed when the temperature is below the standard.
(c) Reinstall the thermostat (See page CO-19).

NG → **REPLACE THERMOSTAT**

OK

REPLACE ECM

DTC	**P0136**	**Oxygen Sensor Circuit Malfunction (Bank 1 Sensor 2)**

DTC	**P0137**	**Oxygen Sensor Circuit Low Voltage (Bank 1 Sensor 2)**

DTC	**P0138**	**Oxygen Sensor Circuit High Voltage (Bank 1 Sensor 2)**

HINT:
Sensor 2 refers to the sensor mounted behind the Three-Way Catalytic Converter (TWC) and located far from the engine assembly.

DESCRIPTION

In order to obtain a high purification rate of the carbon monoxide (CO), hydrocarbon (HC) and nitrogen oxide (NOx) components in the exhaust gas, a TWC is used. For the most efficient use of the TWC, the air-fuel ratio must be precisely controlled so that it is always close to the stoichiometric air-fuel level. For the purpose of helping the ECM to deliver accurate air-fuel ratio control, a Heated Oxygen (HO2) sensor is used.
The HO2 sensor is located behind the TWC, and detects the oxygen concentration in the exhaust gas. Since the sensor is integrated with the heater that heats the sensing portion, it is possible to detect the oxygen concentration even when the intake air volume is low (the exhaust gas temperature is low).
When the air-fuel ratio becomes lean, the oxygen concentration in the exhaust gas is rich. The HO2 sensor informs the ECM that the post-TWC air-fuel ratio is lean (low voltage, i.e. less than 0.45 V).
Conversely, when the air-fuel ratio is richer than the stoichiometric air-fuel level, the oxygen concentration in the exhaust gas becomes lean. The HO2 sensor informs the ECM that the post-TWC air-fuel ratio is rich (high voltage, i.e. more than 0.45 V). The HO2 sensor has the property of changing its output voltage drastically when the air-fuel ratio is close to the stoichiometric level.
The ECM uses the supplementary information from the HO2 sensor to determine whether the air-fuel ratio after the TWC is rich or lean, and adjusts the fuel injection time accordingly. Thus, if the HO2 sensor is working improperly due to internal malfunctions, the ECM is unable to compensate for deviations in the primary air-fuel ratio control.

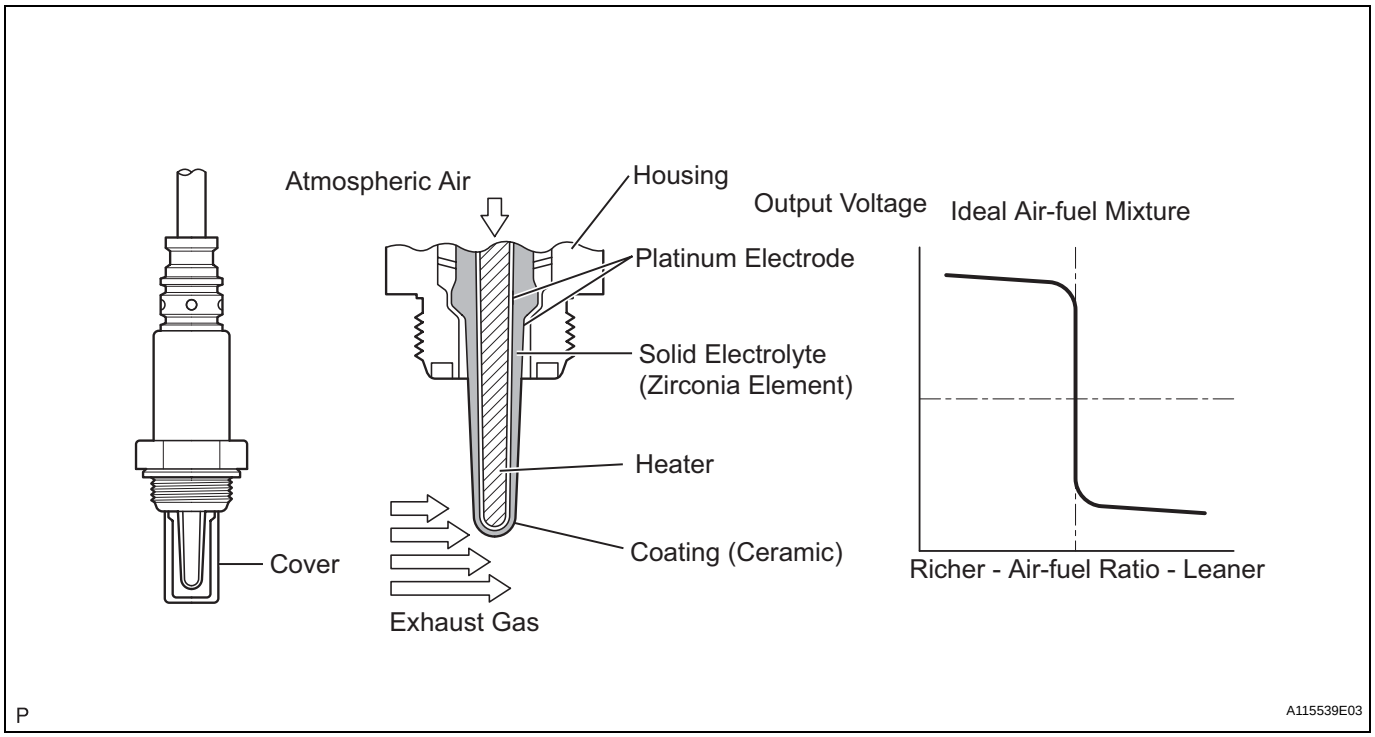

DTC No.	DTC Detection Conditions	Trouble Areas
P0136	• Abnormal voltage output: During active air-fuel ratio control, following conditions (a) and (b) met for certain period of time (2 trip detection logic): (a) Heated Oxygen (HO2) sensor voltage does not decrease to less than 0.21 V (b) HO2 sensor voltage does not increase to more than 0.59 V • Low impedance*: Sensor impedance less than 5 Ωfor more than 30 seconds when ECM presumes sensor to being warmed up and operating normally (2 trip detection logic)	• Open or short in HO2 sensor (sensor 2) circuit • HO2 sensor (sensor 2) • HO2 sensor heater (sensor 2) • Air-fuel Ratio (A/F) sensor (sensor 1) • Integration relay (EFI relay) • Gas leakage from exhaust system
P0137	• Low voltage (open): During active air-fuel ratio control, following conditions (a) and (b) met for certain period of time (2 trip detection logic): (a) HO2 sensor voltage output less than 0.21 V (b) Target air-fuel ratio rich • High impedance*: Sensor impedance 15 kΩ or more for more than 90 seconds when ECM presumes sensor to being warmed up and operating normally (2 trip detection logic)	• Open in HO2 sensor (sensor 2) circuit • HO2 sensor (sensor 2) • HO2 sensor heater (sensor 2) • Integration relay (EFI relay) • Gas leakage from exhaust system
P0138	• High voltage (short): During active air-fuel ratio control, following conditions (a) and (b) met for certain period of time (2 trip detection logic): (a) HO2 sensor voltage output 0.59 V or more (b) Target air-fuel ratio lean • Extremely high voltage (short)*: HO2 sensor voltage output exceeds 1.2 V for more than 10 seconds (2 trip detection logic)	• Short in HO2 sensor (sensor 2) circuit • HO2 sensor (sensor 2) • ECM internal circuit malfunction

*: Only for vehicles except those with Mexico specifications.

ES

MONITOR DESCRIPTION

Active Air-Fuel Ratio Control

The ECM usually performs air-fuel ratio feedback control so that the Air-Fuel Ratio (A/F) sensor output indicates a near stoichiometric air-fuel level. This vehicle includes active air-fuel ratio control in addition to regular air-fuel ratio control. The ECM performs active air-fuel ratio control to detect any deterioration in the Three-Way Catalytic Converter (TWC) and Heated Oxygen (HO2) sensor malfunctions (refer to the diagram below).

Active air-fuel ratio control is performed for approximately 15 to 20 seconds while driving with a warm engine. During active air-fuel ratio control, the air-fuel ratio is forcibly regulated to become lean or rich by the ECM. If the ECM detects a malfunction, one of the following DTCs is set: DTC P0136 (abnormal voltage output), P0137 (open circuit) and P0138 (short circuit).

Abnormal Voltage Output of HO2 Sensor (DTC P0136)

ES

While the ECM is performing active air-fuel ratio control, the air-fuel ratio is forcibly regulated to become rich or lean. If the sensor is not functioning properly, the voltage output variation is small. For example, when the HO2 sensor voltage does not decrease to less than 0.21 V and does not increase to more than 0.59 V during active air-fuel ratio control, the ECM determines that the sensor voltage output is abnormal and sets DTC P0136.

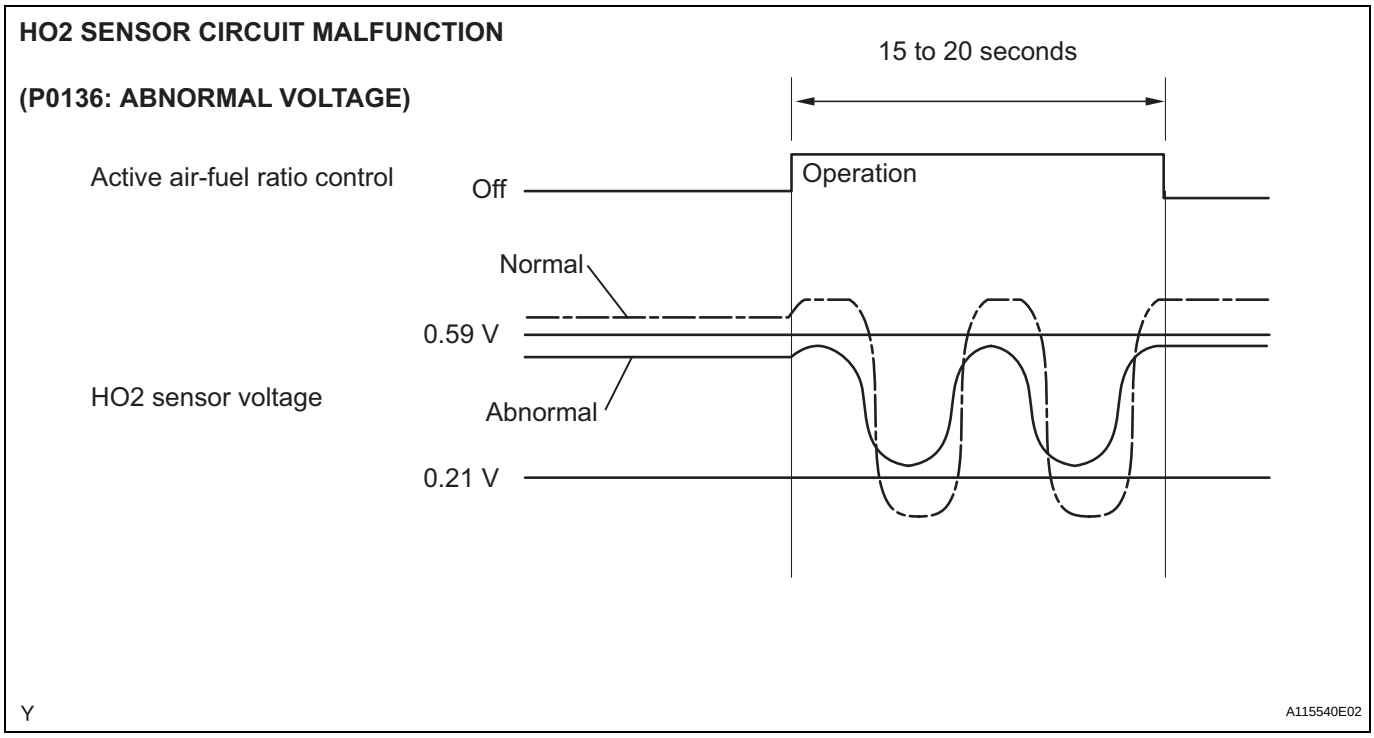

Open or Short in Heated Oxygen (HO2) Sensor Circuit (DTC P0137 or P0138)

During active air-fuel ratio control, the ECM calculates the Oxygen Storage Capacity (OSC)* of the Three-Way Catalytic Converter (TWC) by forcibly regulating the air-fuel ratio to become rich or lean. If the HO2 sensor has an open or short, or the voltage output of the sensor decreases significantly, the OSC indicates an extraordinarily high value. Even if the ECM attempts to continue regulating the air-fuel ratio to become rich or lean, the HO2 sensor output does not change.

While performing active air-fuel ratio control, when the target air-fuel ratio is rich and the HO2 sensor voltage output is 0.21 V or less (lean), the ECM interprets this as an abnormally low sensor output voltage and sets DTC P0137. When the target air-fuel ratio is lean and the voltage output is 0.59 V or more (rich) during active air-fuel ratio control, the ECM determines that the sensor voltage output is abnormally high, and sets DTC P0138.

HINT:

DTC P0138 is also set if the HO2 sensor voltage output is more than 1.2 V for 10 seconds or more.

*: The TWC has the capability to store oxygen. The OSC and the emission purification capacity of the TWC are mutually related. The ECM determines whether the catalyst has deteriorated, based on the calculated OSC value (See page ES-180).

HO2 SENSOR CIRCUIT LOW VOLTAGE

(P0137: OPEN)

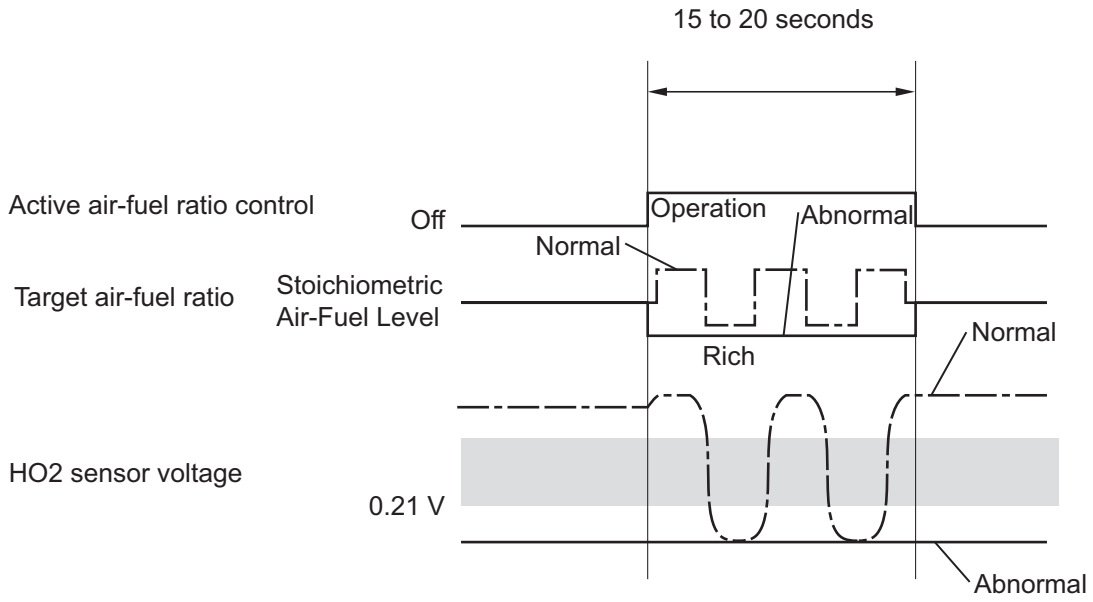

HO2 SENSOR CIRCUIT HIGH VOLTAGE

(P0138: SHORT)

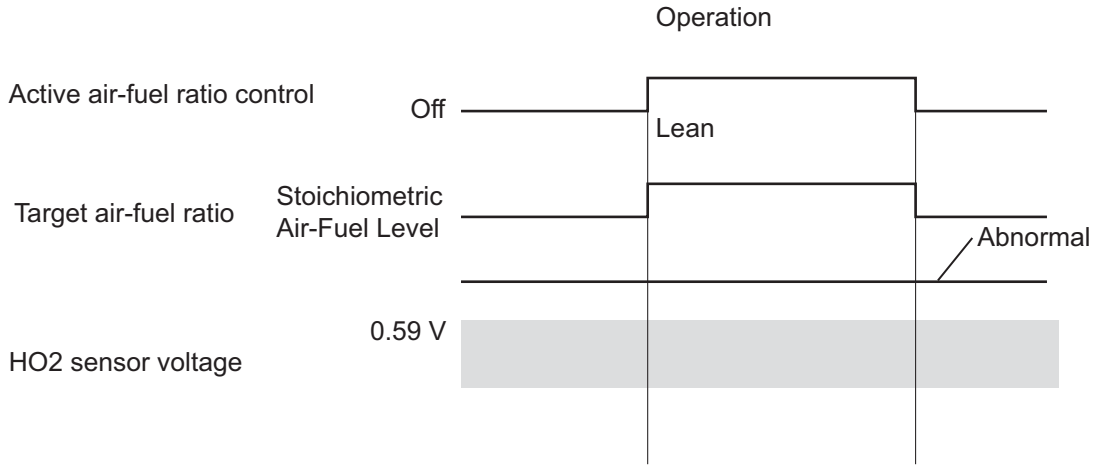

Y

A115541E02

ES

High or Low Impedance of Heated Oxygen (HO2) Sensor (DTC P0136 or P0137)

Relationship between element temperature and impedance:

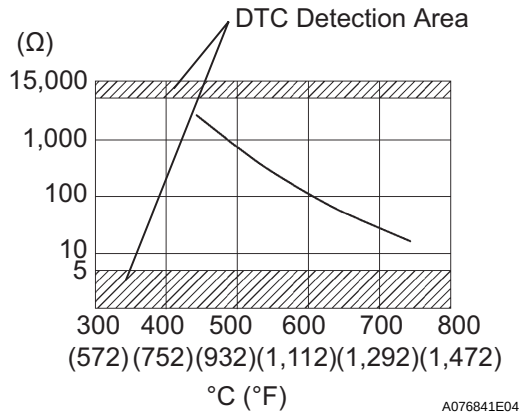

During normal air-fuel ratio feedback control, there are small variations in the exhaust gas oxygen concentration. In order to continuously monitor the slight variations in the HO2 sensor signal while the engine is running, the impedance* of the sensor is measured by the ECM. The ECM determines that there is a malfunction in the sensor when the measured impedance deviates from the standard range.

*: The effective resistance in an alternating current electrical circuit.

HINT:

- The impedance cannot be measured using an ohmmeter.
- DTC P0136 indicates the deterioration of the HO2 sensor. The ECM sets this DTC by calculating the impedance of the sensor when the typical enabling conditions are satisfied (2 driving cycle).
- DTC P0137 indicates an open or short circuit in the HO2 sensor (2 driving cycle). The ECM sets this DTC when the impedance of the sensor exceeds the threshold 15 kΩ.

MONITOR STRATEGY

Related DTCs	P0136: Heated oxygen sensor output voltage (Abnormal voltage output) P0136: Heated oxygen sensor impedance (Low) P0137: Heated oxygen sensor output voltage (Low voltage) P0137: Heated oxygen sensor impedance (High) P0138: Heated oxygen sensor output voltage (High voltage) P0138: Heated oxygen sensor output voltage (Extremely high)
Required Sensors/Components (Main)	Heated oxygen sensor
Required Sensors/Components (Related)	Crankshaft position sensor, engine coolant temperature sensor, mass air flow meter and throttle position sensor
Frequency of Operation	Once per driving cycle: Active air-fuel ratio control detection Continuous: Others
Duration	20 seconds: Active air-fuel ratio control detection 90 seconds: Heated oxygen sensor impedance (High) 30 seconds: Heated oxygen sensor impedance (Low) 10 seconds: Output voltage (Stuck high)
MIL Operation	2 driving cycles
Sequence of Operation	None

TYPICAL ENABLING CONDITIONS

All:

Monitor runs whenever following DTCs not present	P0031, 32 (A/F Sensor heater - Sensor 1) P0037, 38 (O2 Sensor heater - Sensor 2) P0100 - P0103 (MAF meter) P0110 - P0113 (IAT sensor) P0115 - P0118 (ECT sensor) P0120 - P0223, P2135 (TP sensor) P0125 (Insufficient ECT for Closed Loop) P0171, P0172 (Fuel system) P0300 - P0304 (Misfire) P0335 (CKP sensor) P0340 (CMP sensor) P0455, P0456 (EVAP system) P0500 (VSS) P2196 (A/F Sensor - rationality) P2A00 (A/F Sensor - slow response)

Heated Oxygen Sensor Output Voltage (Abnormal Voltage Output, High Voltage and Low Voltage):

Active air-fuel ratio control	Executing
Active air-fuel ratio control begins when all of following conditions met:	-
Battery voltage	11 V or more
Engine coolant temperature	75°C (167°F) or more
Idling	OFF
Engine RPM	Less than 4,000 rpm
A/F sensor status	Activated
Fuel system status	Closed loop
Fuel cut	OFF
Engine load	10 to 80 %
Shift position	4th or 5th (M/T) 3rd or 4th (A/T)

Heated Oxygen Sensor Impedance (Low):

Battery voltage	11 V or more
Estimated rear HO2 sensor temperature	Less than 700°C (1,292°F)
ECM monitor	Completed
DTC P0606	Not set

Heated Oxygen Sensor Impedance (High):

Battery voltage	11 V or more
Estimated rear HO2 sensor temperature	450°C (842°F) or more
ECM monitor	Completed
DTC P0606	Not set

Heated Oxygen Sensor Output Voltage (Extremely High):

Battery voltage	11 V or more
Time after engine start	2 seconds or more

TYPICAL MALFUNCTION THRESHOLDS

Heated Oxygen Sensor Output Voltage (Abnormal Voltage Output):

Either of following conditions met:	1 or 2
1. All of following conditions (a), (b) and (c) met	-
(a) Commanded air-fuel ratio	14.3 or less
(b) Rear HO2 sensor voltage	0.21 to 0.59 V
(c) OSC (Oxygen Storage Capacity of Catalyst)	1.7 g or more
2. All of following conditions (d), (e) and (f) met	-

(d) Commanded air-fuel ratio	14.9 or more
(e) Rear HO2 sensor voltage	0.21 to 0.59 V
(f) OSC	1.7 g or more

Heated Oxygen Sensor Output Voltage (Low):

All of following conditions (a), (b) and (c) met	-
(a) Commanded air-fuel ratio	14.3 or less
(b) Rear HO2 sensor voltage	Less than 0.21 V
(c) OSC	1.7 g or more

Heated Oxygen Sensor Output Voltage (High):

All of following conditions (a), (b) and (c) met	-
(a) Commanded air-fuel ratio	14.9 or more
(b) Rear HO2 sensor voltage	More than 0.59 V
(c) OSC	1.7 g or more

Heated Oxygen Sensor Impedance (Low):

Duration of following condition met	30 seconds or more
Heated oxygen sensor impedance	Less than 5 Ω

Heated Oxygen Sensor Impedance (High):

Duration of following condition met	90 seconds or more
Heated oxygen sensor impedance	15 kΩ or more

Heated Oxygen Sensor Output Voltage (Extremely High):

Duration of following condition met	10 seconds or more
Heated oxygen sensor voltage	1.2 V or more

COMPONENT OPERATING RANGE

Duration of following condition met	30 seconds or more
Heated oxygen sensor voltage	Varies between 0.1 and 0.9 V

MONITOR RESULT

Refer to CHECKING MONITOR STATUS (See page ES-17).

WIRING DIAGRAM

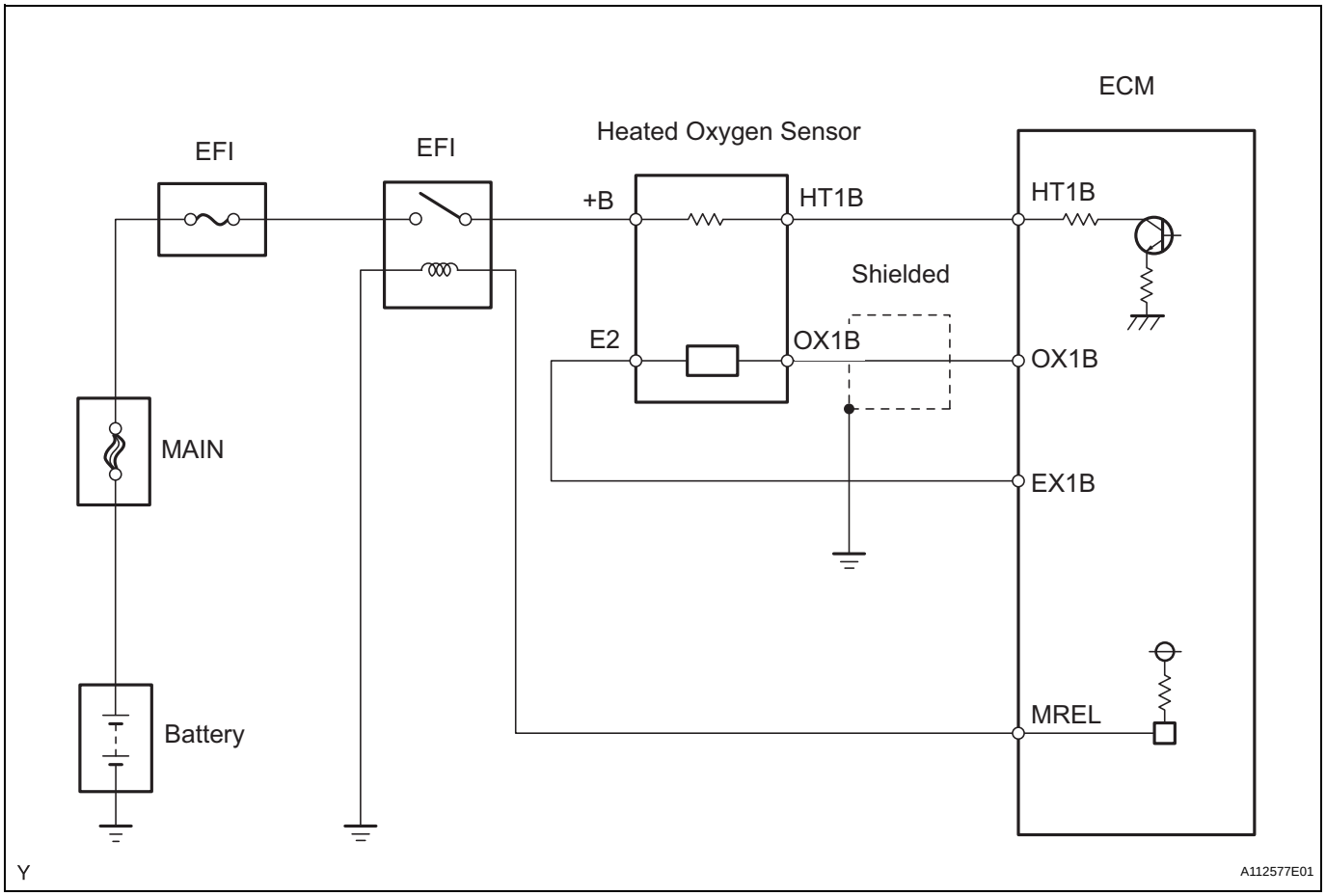

CONFIRMATION DRIVING PATTERN

HINT:

- This confirmation driving pattern is used in the "PERFORM CONFIRMATION DRIVING PATTERN" procedure of the following diagnostic troubleshooting procedure.
- Performing this confirmation pattern will activate the Heated Oxygen (HO2) sensor monitor. (The catalyst monitor is performed simultaneously.) This is very useful for verifying the completion of a repair.

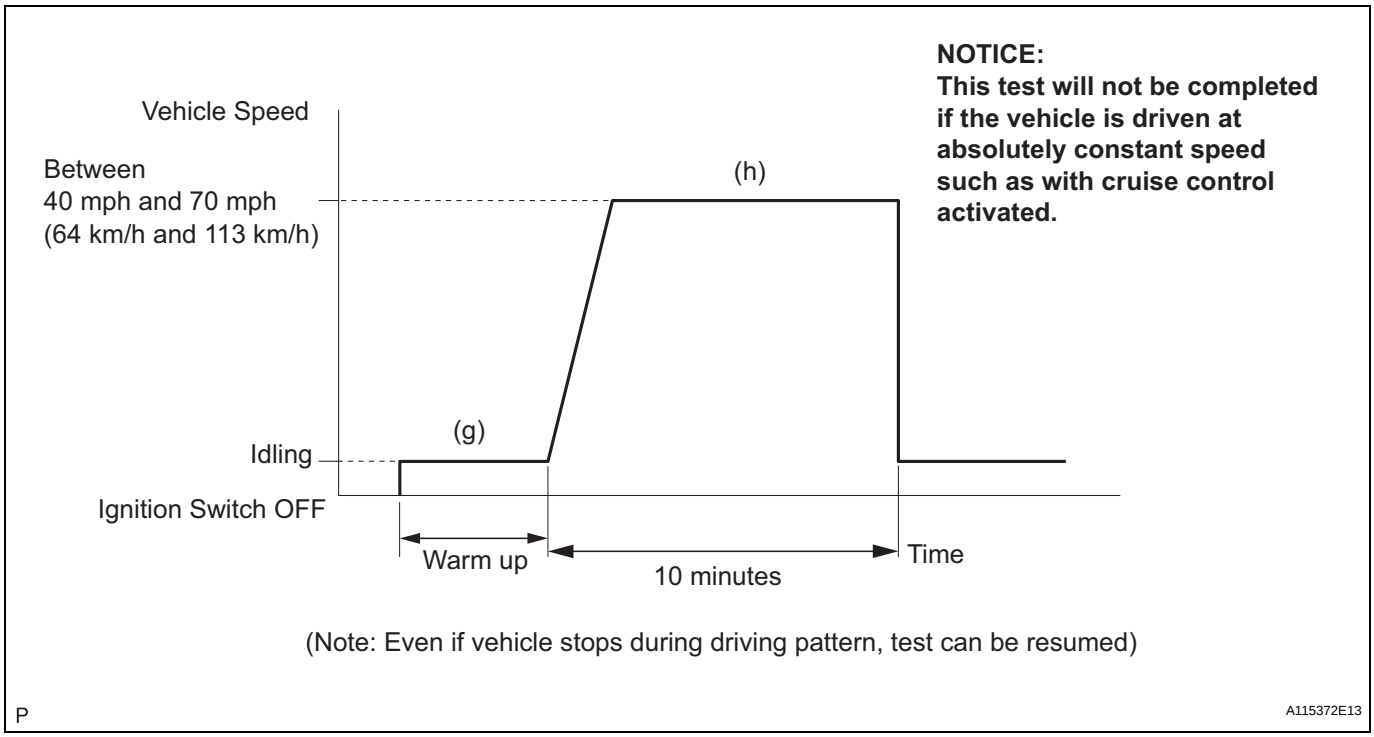

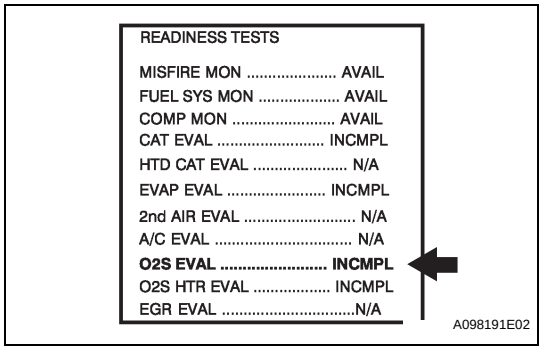

(a) Connect the intelligent tester to the DLC3.
(b) Turn the ignition switch to ON.
(c) Turn the tester ON.
(d) Clear DTCs (where set) (See page ES-34).
(e) Select the following menu items: DIAGNOSIS / CARB OBD II / READINESS TESTS.
(f) Check that O2S EVAL is INCMPL (incomplete).
(g) Start the engine and warm it up.
(h) Drive the vehicle at between 40 mph and 70 mph (64 km/h and 113 km/h) for at least 10 minutes.
(i) Note the state of the Readiness Tests items. Those items will change to COMPL (complete) as the O2S EVAL monitor operates.
(j) On the tester, select the following menu items: DIAGNOSIS / ENHANCED OBD II / DTC INFO / PENDING CODES and check if any DTCs (any pending DTCs) are set.
HINT:
If O2S EVAL does not change to COMPL, and any pending DTCs fail to set, extend the driving time.

INSPECTION PROCEDURE

HINT:
Intelligent tester only:
Malfunctioning areas can be identified by performing the A/F CONTROL function provided in the ACTIVE TEST. The A/F CONTROL function can help to determine whether the Air-Fuel Ratio (A/F) sensor, Heated Oxygen (HO2) sensor and other potential trouble areas are malfunctioning.

The following instructions describe how to conduct the A/F CONTROL operation using an intelligent tester.

(a) Connect an intelligent tester to the DLC3.
(b) Start the engine and turn the tester ON.
(c) Warm up the engine at an engine speed of 2,500 rpm for approximately 90 seconds.
(d) On the tester, select the following menu items: DIAGNOSIS / ENHANCED OBD II / ACTIVE TEST / A/F CONTROL.
(e) Perform the A/F CONTROL operation with the engine idling (press the RIGHT or LEFT button to change the fuel injection volume).
(f) Monitor the voltage outputs of the A/F and HO2 sensors (AFS B1 S1 and O2S B1 S2) displayed on the tester.

HINT:

- The A/F CONTROL operation lowers the fuel injection volume by 12.5 % or increases the injection volume by 25 %.
- The sensors react in accordance with increases and decreases in the fuel injection volume.

Standard

Tester Display (Sensor)	Injection Volumes	Status	Voltages
AFS B1 S1 (A/F)	+25 %	Rich	Less than 3.0
	-12.5 %	Lean	More than 3.35
O2S B1 S2 (HO2)	+25 %	Rich	More than 0.5
	-12.5 %	Lean	Less than 0.4

NOTICE:
The A/F sensor has an output delay of a few seconds and the HO2 sensor has a maximum output delay of approximately 20 seconds.

Case	A/F Sensor (Sensor 1) Output Voltage		HO2 Sensor (Sensor 2) Output Voltage		Main Suspected Trouble Areas
1	Injection Volume +25 % -12.5 %		Injection Volume +25 % -12.5 %		-
	Output Voltage More than 3.35 V Less than 3.0 V	OK	Output Voltage More than 0.5 V Less than 0.4 V	OK	
2	Injection Volume +25 % -12.5 %		Injection Volume +25 % -12.5 %		• A/F sensor • A/F sensor heater • A/F sensor circuit
	Output Voltage Almost no reaction	NG	Output Voltage More than 0.5 V Less than 0.4 V	OK	
3	Injection Volume +25 % -12.5 %		Injection Volume +25 % -12.5 %		• HO2 sensor • HO2 sensor heater • HO2 sensor circuit
	Output Voltage More than 3.35 V Less than 3.0 V	OK	Output Voltage Almost no reaction	NG	
4	Injection volume +25 % -12.5 %		Injection Volume +25 % -12.5 %		• Injector • Fuel pressure • Gas leakage from exhaust system (Air-fuel ratio extremely lean or rich)
	Output Voltage Almost no reaction	NG	Output Voltage Almost no reaction	NG	

Following the A/F CONTROL procedure enables technicians to check and graph the voltage outputs of both the A/F and HO2 sensors.
To display the graph, select the following menu items on the tester: DIAGNOSIS / ENHANCED OBD II / ACTIVE TEST / A/F CONTROL / USER DATA / AFS B1 S1 and O2S B1 S2, and press the YES button and then the ENTER button followed by the F4 button.
HINT:

- Read freeze frame data using an intelligent tester. Freeze frame data record the engine condition when malfunctions are detected. When troubleshooting, freeze frame data can help determine if the vehicle was moving or stationary, if the engine was warmed up or not, if the air-fuel ratio was lean or rich, and other data, from the time the malfunction occurred.
- If the OX1B wire from the ECM connector is short-circuited to the +B wire, DTC P0138 will be set.

1 READ OUTPUT DTC

(a) Connect an intelligent tester to the DLC3.
(b) Turn the ignition switch to ON and turn the tester ON.
(c) Select the following menu items: DIAGNOSIS / ENHANCED OBD II / DTC INFO / CURRENT CODES.
(d) Read DTCs.

Result

Display (DTC output)	Proceed To
P0138	A
P0137	B
P0136	C

B → **Go to step 14**

C → **Go to step 7**

A

2 READ VALUE USING INTELLIGENT TESTER (OUTPUT VOLTAGE OF HEATED OXYGEN SENSOR)

(a) Connect the intelligent tester to the DLC3.
(b) Turn the ignition switch to ON and turn the tester ON.
(c) Select the following menu items: DIAGNOSIS / ENHANCED OBD II / DATA LIST / PRIMARY / O2S B1 S2.
(d) Allow the engine to idle.
(e) Read the Heated Oxygen (HO2) sensor output voltage while idling.

Result

HO2 Sensor Output Voltages	Proceed To
More than 1.2 V	A
Less than 1.0 V	B

B → **Go to step 5**

A

3 CHECK HARNESS AND CONNECTOR (CHECK FOR SHORT)

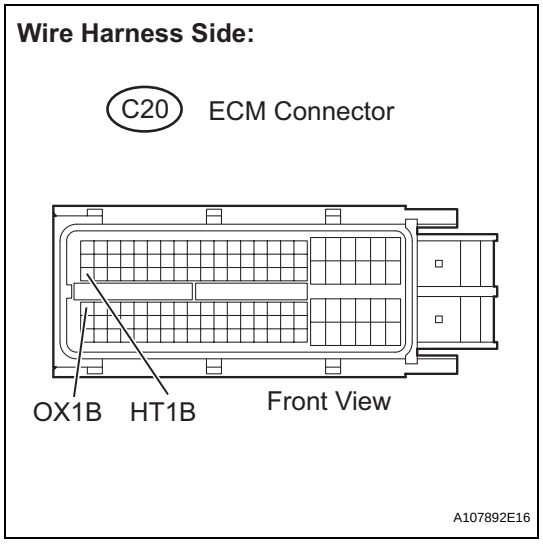

(a) Turn the ignition switch to OFF and wait for 5 minutes.
(b) Disconnect the C20 ECM connector.
(c) Check the resistance.
Standard resistance

Tester Connections	Specified Conditions
HT1B (C20-47) - OX1B (C20-64)	10 kΩ or higher

(d) Reconnect the ECM connector.

OK → **REPLACE ECM**

NG

4 INSPECT HEATED OXYGEN SENSOR (CHECK FOR SHORT)

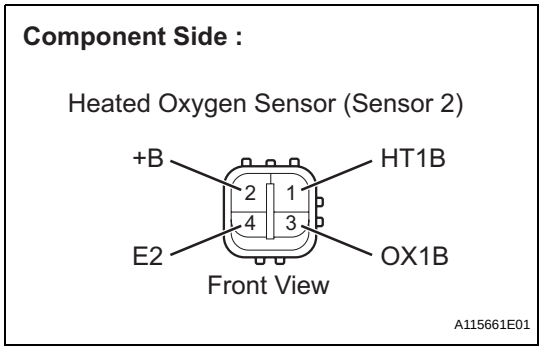

(a) Disconnect the D28 HO2 sensor connector.
(b) Check the resistance.
Standard resistance

Tester Connections	Specified Conditions
+B (2) - E2 (4)	10 kΩ or higher
+B (2) - OX1B (3)	

(c) Reconnect the HO2 sensor connector.

NG → **REPLACE HEATED OXYGEN SENSOR**

OK

REPAIR OR REPLACE HARNESS OR CONNECTOR

5 PERFORM CONFIRMATION DRIVING PATTERN

NEXT

6 CHECK WHETHER DTC OUTPUT RECURS (DTC P0138)

(a) On the intelligent tester, select the following menu items: DIAGNOSIS / ENHANCED OBD II / DTC INFO / CURRENT CODES.
(b) Read DTCs.

ES

Result

Display (DTC Output)	Proceed To
P0138	A
No output	B

B → **CHECK FOR INTERMITTENT PROBLEMS**

A

REPLACE HEATED OXYGEN SENSOR

7 READ VALUE USING INTELLIGENT TESTER (OUTPUT VOLTAGE OF HEATED OXYGEN SENSOR)

(a) Connect the intelligent tester to the DLC3.
(b) Turn the ignition switch to ON and turn the tester ON.
(c) Start the engine.
(d) Select the following menu items: DIAGNOSIS / ENHANCED OBD II / DATA LIST / PRIMARY / O2S B1 S2
(e) After warming up the engine, run the engine at an engine speed of 2,500 rpm for 3 minutes.
(f) Read the output voltage of the HO2 sensor when the engine rpm is suddenly increased.
HINT:
Quickly accelerate the engine to 4,000 rpm 3 times using the accelerator pedal.
Standard:
Fluctuates between 0.4 V or less and 0.5 V or more.

NG → **Go to step 14**

OK

8 PERFORM CONFIRMATION DRIVING PATTERN

NEXT

9 CHECK WHETHER DTC OUTPUT RECURS (DTC P0136)

(a) On the intelligent tester, select the following menu items: DIAGNOSIS / ENHANCED OBD II / DTC INFO / CURRENT CODES.
(b) Read DTCs.

Result

Display (DTC Output)	Proceed To
P0136	A
No output	B

B → **CHECK FOR INTERMITTENT PROBLEMS**

A

10	REPLACE HEATED OXYGEN SENSOR

NEXT

11	PERFORM CONFIRMATION DRIVING PATTERN

NEXT

ES

12	CHECK WHETHER DTC OUTPUT RECURS (DTC P0136)

(a) On the intelligent tester, select the following menu items: DIAGNOSIS / ENHANCED OBD II / DTC INFO / CURRENT CODES.
(b) Read DTCs.

Result

Display (DTC Output)	Proceed To
P0136	A
No output	B

B → **REPAIR COMPLETED**

A

13	PERFORM ACTIVE TEST USING INTELLIGENT TESTER (INJECTION VOLUME)

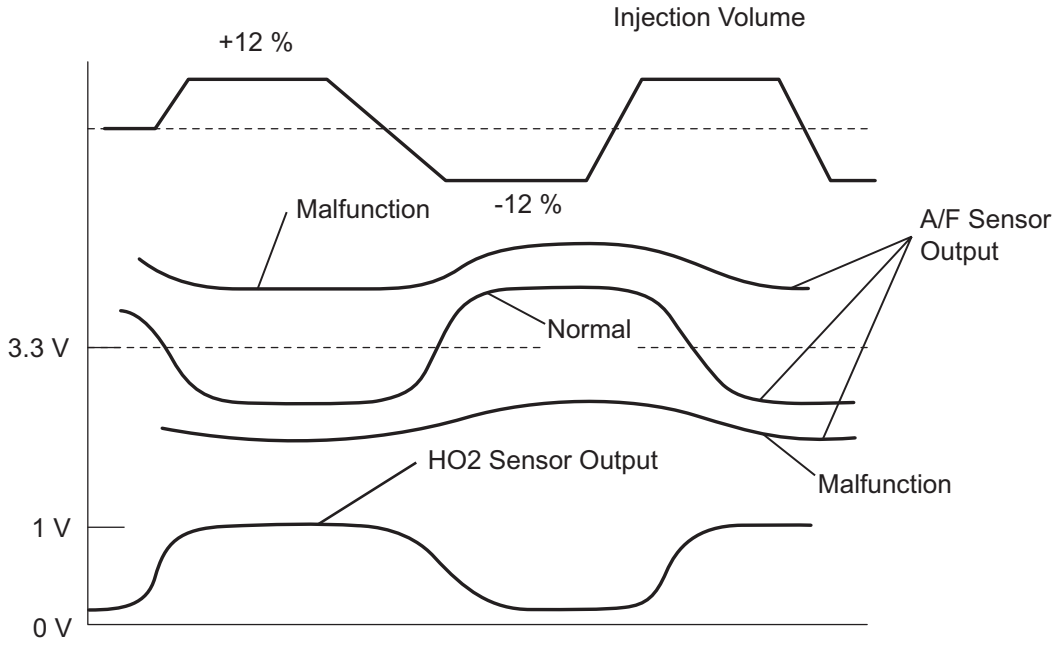

(a) Connect the intelligent tester to the DLC3.
(b) Start the engine and turn the tester ON.
(c) Warm up the engine.
(d) Select the following menu items: DIAGNOSIS / ENHANCED OBD II / ACTIVE TEST / INJ VOL.
(e) Change the fuel injection volume using the tester, monitoring the voltage output of Air-Fuel Ratio (A/F) and HO2 sensors displayed on the tester.

HINT:
- Change the fuel injection volume within the range of -12 % and +12 %. The injection volume can be changed in 1 % graduations within the range.
- The A/F sensor is displayed as AFS B1 S1, and the HO2 sensor is displayed as O2S B1 S2, on intelligent testers.

Result

Tester Display (Sensor)	Voltage Variations	Proceed To
AFS B1 S1 (A/F)	Alternates between more and less than 3.3 V	OK
	Remains at more than 3.3 V	NG
	Remains at less than 3.3 V	NG

HINT:
A normal HO2 sensor voltage (O2S B1 S2) reacts in accordance with increases and decreases in fuel injection volumes. When the A/F sensor voltage remains at either less or more than 3.3 V despite the HO2 sensor indicating a normal reaction, the A/F sensor is malfunctioning.

NG → **REPLACE AIR FUEL RATIO SENSOR**

OK

CHECK AND REPAIR EXTREMELY RICH OR LEAN ACTUAL AIR FUEL RATIO (INJECTOR,FUEL PRESSURE,GAS LEAKAGE FROM EXHAUST SYSTEM,ETC.)

14 CHECK FOR EXHAUST GAS LEAK

OK:
No gas leakage.

NG → **REPAIR OR REPLACE EXHAUST GAS LEAKAGE POINT**

OK

15 INSPECT HEATED OXYGEN SENSOR (HEATER RESISTANCE) (See page ES-83)

NG → **REPLACE HEATED OXYGEN SENSOR**

OK

16	INSPECT INTEGRATION RELAY (EFI RELAY) (See page ES-78)

NG → REPLACE INTEGRATION RELAY (EFI RELAY)

OK

17	CHECK HARNESS AND CONNECTOR (HEATED OXYGEN SENSOR - ECM)

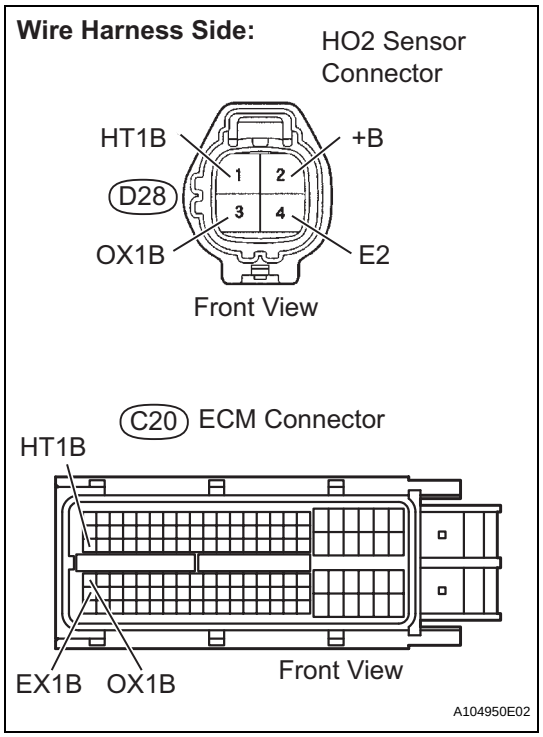

(a) Disconnect the D28 HO2 sensor connector.
(b) Turn the ignition switch to ON.
(c) Measure the voltage between the +B terminal of the HO2 sensor connector and body ground.

Standard voltage

Tester Connections	Specified Conditions
+B (D28-2) - Body ground	11 to 14 V

(d) Turn the ignition switch to OFF.
(e) Disconnect the C20 ECM connector.
(f) Check the resistance.

Standard resistance (Check for open)

Tester Connections	Specified Conditions
HT1B (D28-1) - HT1B (C20-47)	Below 1 Ω
OX1B (D28-3) - OX1B (C20-64)	
E2 (D28-4) - EX1B (C20-87)	

Standard resistance (Check for short)

Tester Connections	Specified Conditions
HT1B (D28-1) or HT1B (C20-47) - Body ground	10 kΩ or higher
OX1B (D28-3) or OX1B (C20-64) - Body ground	
E2 (D28-4) or EX1B (C20-87) - Body ground	

(g) Reconnect the HO2 sensor connector.
(h) Reconnect the ECM connector.

ES

Reference (System Diagram of Sensor 2):

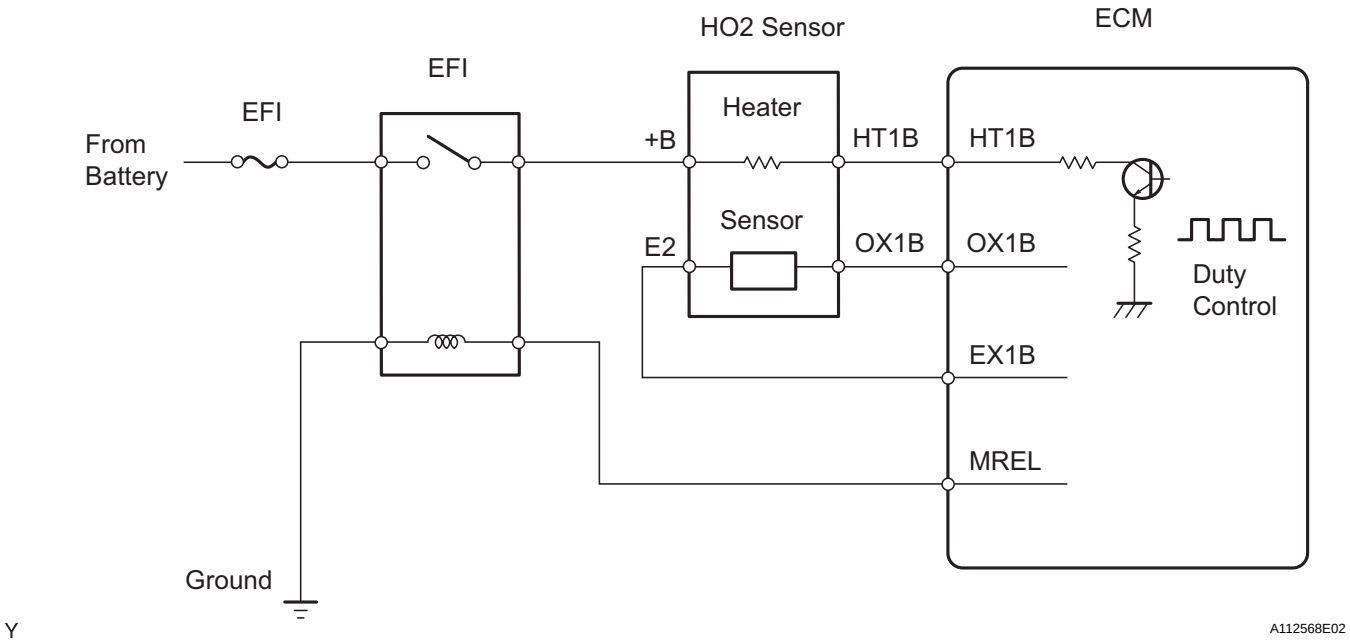

NG → **REPAIR OR REPLACE HARNESS OR CONNECTOR**

OK

REPLACE HEATED OXYGEN SENSOR

ES

DTC	P0171	System Too Lean (Bank 1)

DTC	P0172	System Too Rich (Bank 1)

DESCRIPTION

The fuel trim is related to the feedback compensation value, not to the basic injection time. The fuel trim consists of both the short-term and the long-term fuel trims.
The short-term fuel trim is fuel compensation that is used to constantly maintain the air-fuel ratio at stoichiometric levels. The signal from the Air-Fuel Ratio (A/F) sensor indicates whether the air-fuel ratio is rich or lean compared to the stoichiometric ratio. This triggers a reduction in the fuel injection volume if the air-fuel ratio is rich and an increase in the fuel injection volume if it is lean.
Factors such as individual engine differences, wear over time and changes in operating environment cause short-term fuel trim to vary from the central value. The long-term fuel trim, which controls overall fuel compensation, compensates for long-term deviations in the fuel trim from the central value caused by the short-term fuel trim compensation.
If both the short-term and long-term fuel trims are lean or rich beyond predetermined values, it is interpreted as a malfunction, and the ECM illuminates the MIL and sets a DTC.

DTC No.	DTC Detection Conditions	Trouble Areas
P0171	With warm engine and stable air-fuel ratio feedback, fuel trim considerably in error to lean side (2 trip detection logic)	• Air induction system • Injector blockage • Mass Air Flow (MAF) meter • Engine Coolant Temperature (ECT) sensor • Fuel pressure • Gas leakage from exhaust system • Open or short in A/F sensor (sensor 1) circuit • A/F sensor (sensor 1) • A/F sensor heater (sensor 1) • Integration relay (EFI relay) • A/F sensor heater and EFI relay circuits • PCV valve and hose • PCV hose connections • ECM
P0172	With warm engine and stable air-fuel ratio feedback, fuel trim considerably in error to rich side (2 trip detection logic)	• Injector leakage or blockage • MAF meter • ECT sensor • Ignition system • Fuel pressure • Gas leakage from exhaust system • Open or short in A/F sensor (sensor 1) circuit • A/F sensor (sensor 1) • A/F sensor heater (sensor 1) • Integration relay (EFI relay) • A/F sensor heater and EFI relay circuits • ECM

HINT:
- When DTC P0171 is set, the actual air-fuel ratio is on the lean side. When DTC P0172 is set, the actual air-fuel ratio is on the rich side.
- If the vehicle runs out of fuel, the air-fuel ratio is lean and DTC P0171 may be set. The MIL is then illuminated.
- When the total of the short-term and long-term fuel trim values is within 20 % (and the engine coolant temperature is more than 75°C [167°F]), the system is functioning normally.

MONITOR DESCRIPTION

Under closed-loop fuel control, fuel injection volumes that deviate from those estimated by the ECM cause changes in the long-term fuel trim compensation value. The long-term fuel trim is adjusted when there are persistent deviations in the short-term fuel trim values. Deviations from the ECM's estimated fuel injection volumes also affect the average fuel trim learning value, which is a combination of the average short-term fuel trim (fuel feedback compensation value) and the average long-term fuel trim (learning value of the air-fuel ratio). If the average fuel trim learning value exceeds the malfunction threshold, the ECM interprets this a fault in the fuel system and sets a DTC.
Example:
The average fuel trim learning value is +35 % or more or -35 % or less, the ECM interprets this as a fuel system malfunction.

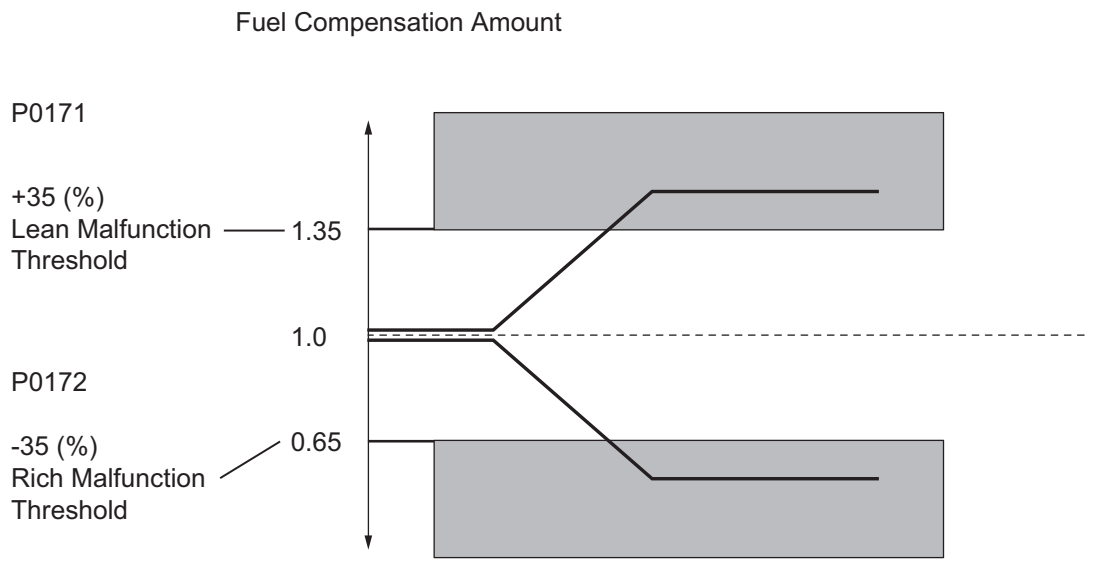

Y A121607E02

MONITOR STRATEGY

Related DTCs	P0171: Fuel trim lean P0172: Fuel trim rich
Required Sensors/Components (Main)	Fuel system
Required Sensors/Components (Related)	A/F sensor, Mass air flow meter, Crankshaft position sensor
Frequency of Operation	Continuous
Duration	Within 10 seconds
MIL Operation	2 driving cycles
Sequence of Operation	None

TYPICAL ENABLING CONDITIONS

Monitor runs whenever following DTCs not present	P0010 (VVT OCV) P0011 (VVT System 1 - Advance) P0012 (VVT System 1 - Retard) P0031, P0032 (A/F sensor heater - Sensor 1) P0100 - P0103 (MAF meter) P0115 - P0118 (ECT sensor) P0120 - P0223, P2135 (TP sensor) P0125 (Insufficient ECT for Closed Loop) P0335 (CKP sensor) P0340 (CMP sensor) P0351 - P0354 (Igniter) P0500 (VSS)
Fuel system status	Closed loop
Battery voltage	11 V or more
Either of following conditions 1 or 2 set	-
1. Engine RPM	Below 1,100 rpm
2. Intake air amount per revolution	0.15 g/rev or more
Catalyst monitor	Not executed

TYPICAL MALFUNCTION THRESHOLDS

Purge-cut	Executing
Either of following conditions 1 or 2 met	-
1. Average of short-term fuel trim and long-term fuel trim	35 % or more (varies with ECT)
2. Average of short-term fuel trim and long-term fuel trim	-35 % or less (varies with ECT)

WIRING DIAGRAM

Refer to DTC P2195 (See page ES-280).

INSPECTION PROCEDURE

HINT:

- Read freeze frame data using an intelligent tester. Freeze frame data record the engine condition when malfunctions are detected. When troubleshooting, freeze frame data can help determine if the vehicle was moving or stationary, if the engine was warmed up or not, if the air-fuel ratio was lean or rich, and other data, from the time the malfunction occurred.
- A low A/F sensor voltage could be caused by a rich air-fuel mixture. Check for conditions that would cause the engine to run rich.
- A high A/F sensor voltage could be caused by a lean air-fuel mixture. Check for conditions that would cause the engine to run lean.

1	CHECK ANY OTHER DTCS OUTPUT (IN ADDITION TO DTC P0171 OR P0172)

(a) Connect an intelligent tester to the DLC3.
(b) Turn the ignition switch to ON and turn the tester ON.
(c) Select the following menu items: DIAGNOSIS / ENHANCED OBD II / DTC INFO / CURRENT CODES.
(d) Read DTCs.

Result

Display (DTC Output)	Proceed To
P0171 or P0172	A
P0171 or P0172 and other DTCs	B

HINT:
If any DTCs other than P0171 or P0172 are output, troubleshoot those DTCs first.

B → **GO TO DTC CHART**

A

2 PERFORM ACTIVE TEST USING INTELLIGENT TESTER (A/F CONTROL)

(a) Connect the intelligent tester to the DLC3.
(b) Start the engine and turn the tester ON.
(c) Warm up the engine at an engine speed of 2,500 rpm for approximately 90 seconds.
(d) On the tester, select the following menu items: DIAGNOSIS / ENHANCED OBD II / ACTIVE TEST / A/F CONTROL.
(e) Perform the A/F CONTROL operation with the engine in an idling condition (press the RIGHT or LEFT button to change the fuel injection volume).
(f) Monitor the outputs voltages of A/F and HO2 sensors (AFS B1S1 and O2S B1S2) displayed on the tester.

Result:

The A/F sensor reacts in accordance with increases and decreases in the fuel injection volume:
+25 % = Rich output:
Less than 3.0 V
-12.5 % = Lean output:
More than 3.35 V

NOTICE:
The A/F sensor has an output delay of a few seconds and the HO2 sensor has a maximum output delay of approximately 20 seconds.

Case	A/F Sensor (Sensor 1) Output Voltage		HO2 Sensor (Sensor 2) Output Voltage		Main Suspected Trouble Areas
1	Injection Volume +25 % -12.5 %		Injection Volume +25 % -12.5 %		-
	Output Voltage More than 3.35 V Less than 3.0 V		Output Voltage More than 0.5 V Less than 0.4 V		
2	Injection Volume +25 % -12.5 %		Injection Volume +25 % -12.5 %		• A/F sensor • A/F sensor heater • A/F sensor circuit
	Output Voltage Almost no reaction		Output Voltage More than 0.5 V Less than 0.4 V		

ES

Case	A/F Sensor (Sensor 1) Output Voltage		HO2 Sensor (Sensor 2) Output Voltage		Main Suspected Trouble Areas
3	Injection volume +25 % -12.5 %		Injection Volume +25 % -12.5 %		Extremely rich or lean actual air-fuel ratio • Injector leakage or blockage • Gas leakage from exhaust system • Fuel pressure • MAF meter • ECT sensor • Air induction system • PCV hose connections
Output Voltage Almost no reaction	NG	Output Voltage Almost no reaction	NG		

Following the A/F CONTROL procedure enables technicians to check and graph the voltage outputs of both the A/F and HO2 sensors.
To display the graph, select the following menu items on the tester: DIAGNOSIS / ENHANCED OBD II / ACTIVE TEST / A/F CONTROL / USER DATA / AFS B1S1 and O2S B1S2, and press the YES button and then the ENTER button followed by the F4 button.

ES

Result

Result	Proceed To
Case 1	C
Case 2	B
Case 3	A

B → **Go to step 11**

C → **Go to step 15**

A

3 READ VALUE USING INTELLIGENT TESTER (MAF)

(a) Connect the intelligent tester to the DLC3.
(b) Turn the ignition switch to ON and turn the tester ON.
(c) Select the following menu items: DIAGNOSIS / ENHANCED OBD II / DATA LIST / PRIMARY / MAF and COOLANT TEMP.
(d) Allow the engine to idle until the COOLANT TEMP reaches 75°C (167°F) or more.
(e) Read the MAF with the engine in an idling condition and at an engine speed of 2,500 rpm.
Standard:
MAF while engine idling: 1 to 3 g/sec (shift position: N, A/C: OFF).
MAF at engine speed of 2,500 rpm: 2 to 6 g/sec (shift position: N, A/C: OFF).

NG → **REPLACE MASS AIR FLOW METER**

OK

ES

4	READ VALUE USING INTELLIGENT TESTER (COOLANT TEMP)

(a) Connect the intelligent tester to the DLC3.
(b) Turn the ignition switch to ON and turn the tester ON.
(c) Select the following menu items: DIAGNOSIS / ENHANCED OBD II / DATA LIST / PRIMARY / COOLANT TEMP.
(d) Read the COOLANT TEMP twice, when the engine is both cold and warmed up.
Standard:
With cold engine: Same as ambient air temperature.
With warm engine: 75°C to 100°C (167°F to 212°F).

NG → **REPLACE ENGINE COOLANT TEMPERATURE SENSOR**

OK

5	CHECK PCV HOSE CONNECTIONS

(a) Check for PCV hose connections.
OK:
PCV hose is connected correctly and is not damaged.

NG → **REPAIR OR REPLACE PCV HOSE**

OK

6	CHECK AIR INDUCTION SYSTEM

(a) Check the air induction system for vacuum leakage.
OK:
No leakage from air induction system.

NG → **REPAIR OR REPLACE AIR INDUCTION SYSTEM**

OK

7	CHECK FOR SPARKS AND IGNITION (See page ES-160)

NG → **REPAIR OR REPLACE IGNITION SYSTEM**

OK

8	CHECK FOR EXHAUST GAS LEAK

(a) Check for exhaust gas leakage.

OK:
No gas leakage.

NG → **REPAIR OR REPLACE EXHAUST SYSTEM**

OK

9	CHECK FUEL PRESSURE

(a) Check the fuel pressure (See page FU-7).
Standard:
304 to 343 kPa (3.1 to 3.5 kgf/cm^2, 44.1 to 49.7 psi)

NG → **REPAIR OR REPLACE FUEL SYSTEM**

ES

OK

10	INSPECT FUEL INJECTOR (INJECTION AND VOLUME)

(a) Check the injection volume (See page FU-16).
Standard:
45 to 58 cm^3 (2.9 to 3.5 cu in.) per 15 seconds

NG → **REPLACE FUEL INJECTOR**

OK

11	INSPECT AIR FUEL RATIO SENSOR (HEATER RESISTANCE) (See page ES-77)

NG → **REPLACE AIR FUEL RATIO SENSOR**

OK

12	INSPECT INTEGRATION RELAY (EFI RELAY) (See page ES-78)

NG → **REPLACE INTEGRATION RELAY**

OK

13	CHECK HARNESS AND CONNECTOR (A/F SENSOR - ECM) (See page ES-294)

NG → **REPAIR OR REPLACE HARNESS OR CONNECTOR**

OK

14	REPLACE AIR FUEL RATIO SENSOR

NEXT

15	PERFORM CONFIRMATION DRIVING PATTERN

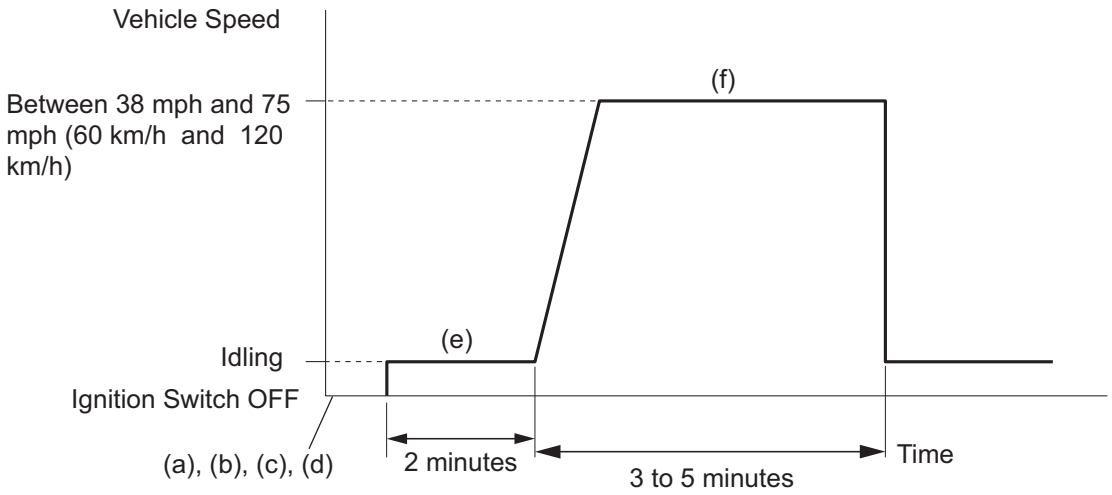

A115372E12

(a) Connect the intelligent tester to the DLC3.
(b) Turn the ignition switch to ON and turn the tester ON.
(c) Clear DTCs (See page ES-34).
(d) Switch the ECM from normal mode to check mode using the tester (See page ES-37).
(e) Start the engine and warm it up with all the accessories switched OFF.
(f) Drive the vehicle at between 38 mph and 75 mph (60 km/h and 120 km/h) and at an engine speed of between 1,400 rpm and 3,200 rpm for 3 to 5 minutes.
HINT:
If the system is still malfunctioning, the MIL will be illuminated during step (f).
NOTICE:
If the conditions in this test are not strictly followed, no malfunction will be detected.

NEXT

16	CHECK WHETHER DTC OUTPUT RECURS (DTC P0171 OR P0172)

(a) On the intelligent tester, select the following menu items: DIAGNOSIS / ENHANCED OBD II / DTC INFO / CURRENT CODES.
(b) Read DTCs.

Result

Display (DTC Output)	Proceed To
No output	A
P0171 or P0172	B

B → **Go to step 3**

A

END

DTC	P0300	Random / Multiple Cylinder Misfire Detected

DTC	P0301	Cylinder 1 Misfire Detected

DTC	P0302	Cylinder 2 Misfire Detected

DTC	P0303	Cylinder 3 Misfire Detected

DTC	P0304	Cylinder 4 Misfire Detected

ES

DESCRIPTION

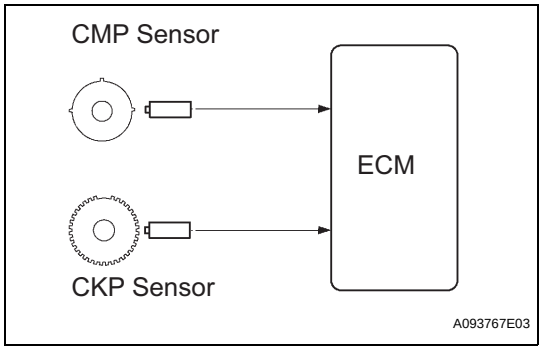

When the engine misfires, high concentrations of hydrocarbons (HC) enter the exhaust gas. Extremely high HC concentration levels can cause increases in exhaust emission levels. High concentrations of HC can also cause increases in the Three-Way Catalytic Converter (TWC) temperature, which may cause damage to the TWC. To prevent these increases in emissions and to limit the possibility of thermal damage, the ECM monitors the misfire rate. When the temperature of the TWC reaches the point of thermal degradation, the ECM blinks the MIL. To monitor misfires, the ECM uses both the Camshaft Position (CMP) sensor and the Crankshaft Position (CKP) sensor. The CMP sensor is used to identify any misfiring cylinders and the CKP sensor is used to measure variations in the crankshaft rotation speed. Misfires are counted as when the crankshaft rotation speed variations exceed predetermined thresholds. If the misfire rate exceeds the threshold level, and could cause emission deterioration, the ECM illuminates the MIL and sets a DTC.

DTC No.	DTC Detection Conditions	Trouble Areas
P0300	Simultaneous misfiring of several cylinders detected (2 trip detection logic)	• Open or short in engine wire harness • Connector connection • Vacuum hose connections • Ignition system • Injector • Fuel pressure • Mass Air Flow (MAF) meter • Engine Coolant Temperature (ECT) sensor • Compression pressure • Valve clearance • Valve timing • PCV valve and hose • PCV hose connections • Air induction system • ECM
P0301 P0302 P0303 P0304	Misfiring of specific cylinder detected (2 trip detection logic)	

When DTCs for misfiring cylinders are randomly set, but DTC P0300 is not set, it indicates that misfires have been detected in different cylinders at different times. DTC P0300 is only set when several misfiring cylinders are detected at the same time.

MONITOR DESCRIPTION

The ECM illuminates the MIL and sets a DTC when either of the following conditions, which could cause emission deterioration, is detected (2 trip detection logic).

- Within the first 1,000 crankshaft revolutions of the engine starting, an excessive misfiring rate (approximately 20 to 50 misfires per 1,000 crankshaft revolutions) occurs once.
- After the first 1,000 crankshaft revolutions, an excessive misfiring rate (approximately 20 to 50 misfires per 1,000 crankshaft revolutions) occurs 4 times in sequential crankshaft revolutions.

The ECM flashes the MIL and sets a DTC when either of the following conditions, which could cause Three-Way Catalytic Converter (TWC) damage, is detected (2 trip detection logic).

- In every 200 crankshaft revolutions at a high engine rpm, the threshold misfiring percentage is recorded once.
- In every 200 crankshaft revolutions at a normal engine rpm, the threshold misfiring percentage is recorded 3 times.

MONITOR STRATEGY

Related DTCs	P0300: Multiple cylinder misfire P0301: Cylinder 1 misfire P0302: Cylinder 2 misfire P0303: Cylinder 3 misfire P0304: Cylinder 4 misfire
Required Sensors/Components (Main)	Crankshaft position sensor and Camshaft position sensor
Required Sensors/Components (Related)	Engine coolant temperature and intake air temperature sensors and Mass air flow meter
Frequency of Operation	Continuous
Duration	1,000 to 4,000 crankshaft revolutions: Emission related misfire 200 to 600 crankshaft revolutions: Catalyst damaged misfire
MIL Operation	2 driving cycles: Emission related misfire MIL flashes immediately: Catalyst damaged misfire
Sequence of Operation	None

TYPICAL ENABLING CONDITIONS

Misfire:

Monitor runs whenever following DTCs not present	P0100 - P0103 (MAF meter) P0110 - P0113 (IAT sensor) P0115 - P0118 (ECT sensor) P0120 - P0223, P2135 (TP sensor) P0125 (Insufficient ECT for Closed Loop) P0327, P0328 (Knock sensor) P0335 (CKP sensor) P0340 (CMP sensor) P0500 (VSS)
Battery voltage	8 V or more
VVT system	Not operated by scan tool
Engine RPM	450 to 6,600 rpm
Either of following conditions (a) or (b) met	-
(a) ECT at engine start	More than -7°C (19°F)
(b) ECT	More than 20°C (68°F)
Fuel cut	OFF

Monitor period of emission-related-misfire:

First 1,000 revolutions after engine start, or Check Mode	Crankshaft 1,000 revolutions
Except above	Crankshaft 1,000 revolutions x 4

Monitor period of catalyst-damaged-misfire (MIL blinks):

All of following conditions 1, 2 and 3 met	Crankshaft 200 revolutions x 3
1. Driving cycles	1st

2. Check mode	OFF
3. Engine RPM	Less than 2,800 rpm
Except above	Crankshaft 200 revolutions

TYPICAL MALFUNCTION THRESHOLDS

Monitor period of emission-related-misfire:

Misfire rate	1.63 % or more

Monitor period of catalyst-damage-misfire (MIL blinks):

Number of misfire per 200 revolutions	101 or more (varies with intake air amount and RPM)

MONITOR RESULT

Refer to CHECKING MONITOR STATUS (See page ES-17).

WIRING DIAGRAM

Wiring diagram of the ignition system.

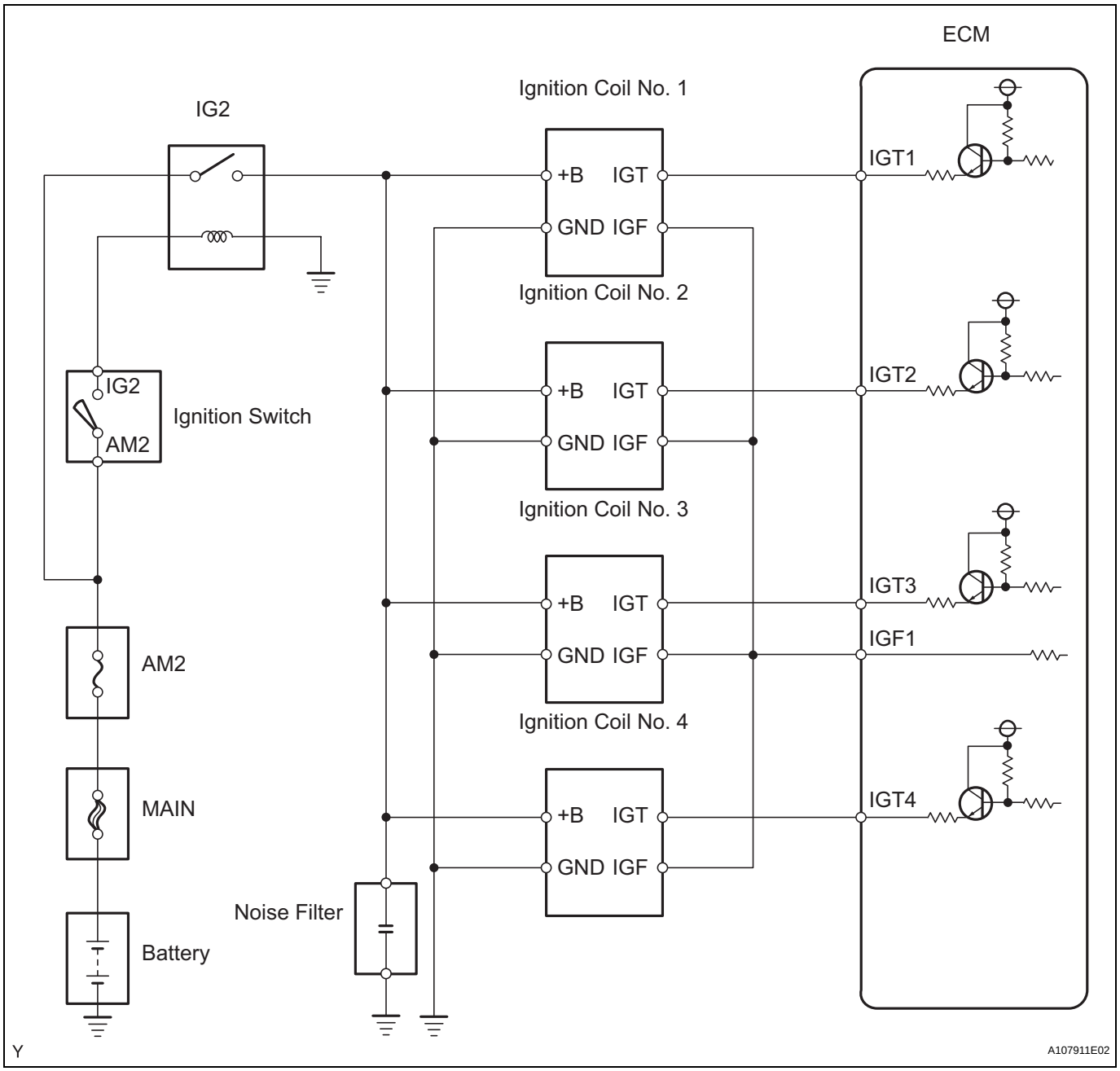

Wiring diagram of the injector circuit.

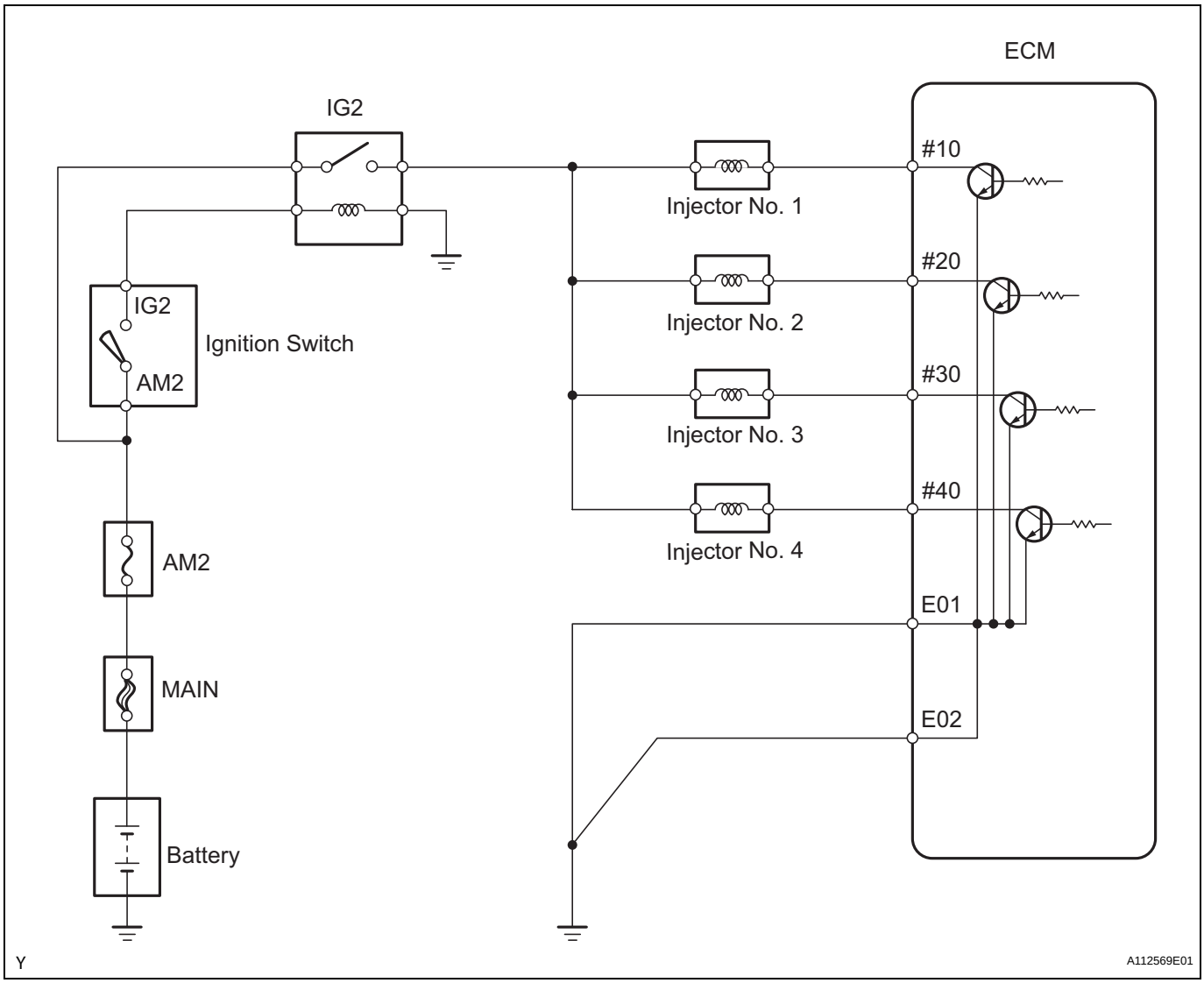

CONFIRMATION DRIVING PATTERN

1. Connect an intelligent tester to the DLC3.
2. Turn the ignition switch to ON.
3. Turn the tester ON.
4. Record the DTC(s) and freeze frame data.
5. Using the tester, switch the ECM from normal mode to check mode (See page ES-37).
6. Read the misfire counts of each cylinder (CYL #1 to #4) with the engine in an idling condition. If any misfire count is displayed, skip the following confirmation driving pattern.
7. Drive the vehicle several times with the conditions, such as engine rpm and engine load, shown in MISFIRE RPM and MISFIRE LOAD in the DATA LIST.
   HINT:
   In order to store misfire DTCs, it is necessary to drive the vehicle for the period of time shown in the table below, with the MISFIRE RPM and MISFIRE LOAD in the DATA LIST.

Engine RPM	Duration
Idling	3.5 minutes or more
1,000	3 minutes or more
2,000	1.5 minutes or more
3,000	1 minute or more

8. Check whether misfires have occurred by checking DTCs and freeze frame data.
   HINT:
   Do not turn the ignition switch to OFF until the stored DTC(s) and freeze frame data have been recorded. When the ECM returns to normal mode (default), the stored DTC(s), freeze frame data and other data will be erased.
9. Record the DTC(s), freeze frame data and misfire counts.
10. Turn the ignition switch to OFF and wait for at least 5 seconds.

INSPECTION PROCEDURE

HINT:

- If any DTCs other than misfire DTCs are output, troubleshoot those DTCs first.
- Read freeze frame data using an intelligent tester. Freeze frame data record the engine condition when malfunctions are detected. When troubleshooting, freeze frame data can help determine if the vehicle was moving or stationary, if the engine was warmed up or not, if the air-fuel ratio was lean or rich, and other data, from the time the malfunction occurred.
- If the misfire does not recur when the vehicle is brought to the workshop, reproduce the conditions stored in the freeze frame data.
- If the misfire still cannot be reproduced even though the conditions stored in the freeze frame data have been duplicated, one of the following factors is considered to be a possible cause of the problem:
  (a) The fuel level is low.
  (b) Improper fuel is used.
  (c) The spark plugs are dirty.
  (d) The problem is complex due to multiple factors.
- After finishing repairs, check that no misfires occur in each cylinder (CYL #1, #2, #3 and #4).
- Be sure to confirm that no misfiring cylinder DTCs are set again by conducting the confirmation driving pattern, after the repairs.
- For 6 and 8 cylinder engines, the ECM intentionally does not set the specific misfiring cylinder DTCs at high engine RPM. If misfires only occur during high engine RPM driving, only DTC P0300 is set.
  In the event of DTC P0300 being present, perform the following operations:
  (a) Clear the DTC (See page ES-34).
  (b) Start the engine and conduct the confirmation driving pattern.
  (c) Read the misfiring rates of each cylinder or DTC(s) using the tester.
  (d) Repair the cylinder(s) that has a high misfiring rate or is indicated by the DTC.
  (e) After finishing repairs, conduct the confirmation driving pattern again, in order to verify that DTC P0300 is not set.
- When either SHORT FT #1 or LONG FT #1 in the freeze frame data is outside the range of +-20 %, the air-fuel ratio may be rich (-20 % or less) or lean (+20 % or more).
- When the COOLANT TEMP in the freeze frame data is less than 75°C (167°F), the misfires occurred only while warming up the engine.

1	CHECK ANY OTHER DTCS OUTPUT (IN ADDITION TO MISFIRE DTCS)

(a) Connect an intelligent tester to the DLC3.
(b) Turn the ignition switch to ON.
(c) Turn the tester ON.
(d) Select the following menu items: DIAGNOSIS / ENHANCED OBD II / DTC INFO / CURRENT CODES.
(e) Read DTCs.

Result

Display (DTC Output)	Proceed To
P0300, P0301, P0302, P0303 and/or P0304	A
P0300, P0301, P0302, P0303 and/or P0304 and other DTCs	B

HINT:
If any DTCs other than P0300, P0301, P0302, P0303 and P0304 are output, troubleshoot those DTCs first.

B → **GO TO DTC CHART**

A

2	READ VALUE USING INTELLIGENT TESTER (MISFIRE RPM AND MISFIRE LOAD)

(a) Connect the intelligent tester to the DLC3.
(b) Turn the ignition switch to ON and turn the tester ON.
(c) Select the following menu items: DIAGNOSIS / ENHANCED OBD II / DATA LIST / MISFIRE / MISFIRE RPM and MISFIRE LOAD.
(d) Read and note the MISFIRE RPM and MISFIRE LOAD (engine load) values.
HINT:
The MISFIRE RPM and MISFIRE LOAD indicate the vehicle conditions under which the misfire occurred.

NEXT

3	CHECK PCV HOSE CONNECTIONS

OK:
PCV hose is connected correctly and is not damaged.

NG → **REPAIR OR REPLACE PCV HOSE**

OK

4	CHECK MISFIRE COUNT (CYL #1, #2, #3 AND #4)

(a) Connect the intelligent tester to the DLC3.
(b) Turn the ignition switch to ON.
(c) Turn the tester ON.
(d) Clear DTCs (See page ES-34).
(e) Select the following menu items: DIAGNOSIS / ENHANCED OBD II / DATA LIST / MISFIRE / CYL #1, #2, #3 and #4.
(f) Allow the engine to idle.
(g) Read each value for CYL #1 to #4 displayed on the tester. If no misfire counts occur in any cylinders, perform the following conditions:
(1) Shift the gear selector lever to the D position.
(2) Check the CYL #1 to #4.
(3) If misfire counts are still not displayed, perform steps (h) and (i) and then check the misfire counts again.
(h) Drive the vehicle with the MISFIRE RPM and MISFIRE LOAD noted in step 2.

(i) Read the CYL #1 to #4 or DTCs displayed on the tester.

Result

Misfire Count	Proceed To
Most misfires occur in only one or two cylinders	A
Three cylinders or more have equal misfire counts	B

HINT:
- If it is difficult to reproduce misfires for each cylinder, check the DATA LIST item called MISFIRE MARGIN. Try to find vehicle driving conditions that lower the MISFIRE MARGIN value. Values above 30 % are considered normal.
- If the freeze frame data's record of the ECT is below 75°C (167°F), the misfire may be detected only when the engine is cold.
- If the freeze frame data's record of the ENGINE RUN TIME is below 120 seconds, the misfire may be detected immediately after the engine is started.

B → **Go to step 14**

A

5 PERFORM ACTIVE TEST USING INTELLIGENT TESTER (FUEL CUT #1 TO #4)

(a) Allow the engine to idle.
(b) Select the following menu items: DIAGNOSIS / ENHANCED OBD II / ACTIVE TEST / FUEL CUT#1 (to #4).
(c) If a cylinder has a high misfire count, cut fuel to that cylinder. Compare the misfire count of the cylinder before fuel cut and after fuel cut.

Result

Misfire Count in Each Cylinder	Proceed To
Misfire count of cylinder before fuel cut and after fuel cut roughly same	A
Misfire count of cylinder before fuel cut lower than after fuel cut	B

NOTICE:
This ACTIVE TEST cannot be performed while the vehicle is being driven.
HINT:
If the misfire count of the cylinder before and after the fuel cut are roughly the same, the cylinder is misfiring.
If the misfire count of the cylinder before the fuel cut is lower than after the fuel cut, the cylinder misfires sometimes.

B → **Go to step 11**

A

6 CHECK SPARK PLUG

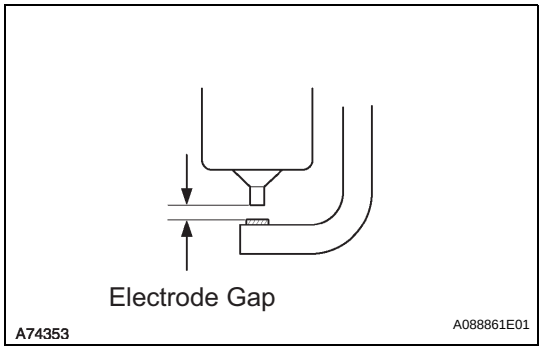

(a) Remove the ignition coil and the spark plug of the misfiring cylinder.
(b) Measure the spark plug electrode gap.
Standard:
1.0 to 1.1 mm (0.039 to 0.043 in.)
(c) Check the electrode for carbon deposits.
Recommended spark plug:

Manufactures	Products
DENSO	SK16R11
NGK	IFR5A11

NOTICE:
If the electrode gap is larger than standard, replace the spark plug. Do not adjust the electrode gap.

NG → **REPLACE SPARK PLUG**

OK

7 CHECK FOR SPARKS AND IGNITION

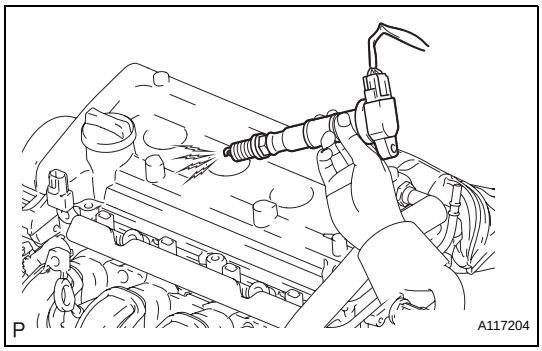

(a) Disconnect the injector connectors, in order to prevent the engine from starting.
(b) Install the spark plug onto the ignition coil.
(c) Attach the spark plug assembly to the cylinder head.
(d) Crank the engine for less than 2 seconds and check the spark.
OK:
Sparks jump across electrode gap.
(e) Reconnect the injector connectors.

NG → **Go to step 9**

OK

8 CHECK CYLINDER COMPRESSION PRESSURE OF MISFIRING CYLINDER

(a) Measure the cylinder compression pressure of the misfiring cylinder.

OK → **Go to step 10**

NG

CHECK ENGINE TO DETERMINE CAUSE OF LOW COMPRESSION

9	CHANGE NORMAL SPARK PLUG AND CHECK SPARK OF MISFIRING CYLINDER

(a) Change the installed spark plug to a spark plug that functions normally.
(b) Perform a spark test.
CAUTION:
Always disconnect all injector connectors.
NOTICE:
Do not crank the engine for more than 2 seconds.
(1) Install the spark plug to the ignition coil and connect the ignition coil connector.
(2) Disconnect the injector connector.
(3) Ground the spark plug.
(4) Check if sparks occur while the engine is being cranked.
OK:
Sparks jump across electrode gap.

NG → **REPLACE IGNITION COIL ASSEMBLY THEN CONFIRM THAT THERE IS NO MISFIRE**

OK

REPLACE SPARK PLUG

10	INSPECT ECM TERMINAL OF MISFIRING CYLINDER (#10, #20, #30, AND /OR #40 VOLTAGE)

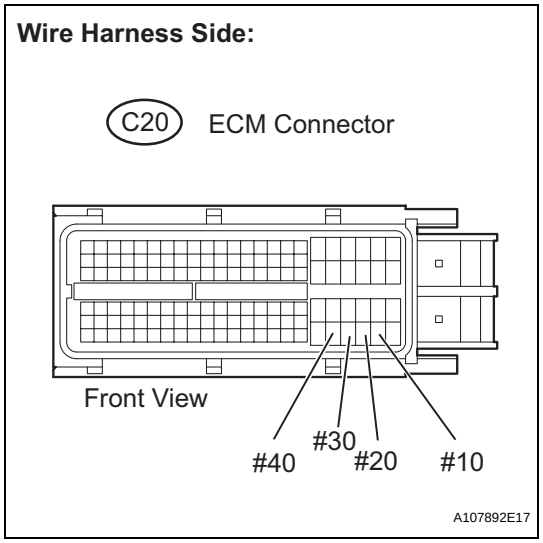

(a) Disconnect the C20 ECM connector.
(b) Turn the ignition switch to ON.
(c) Measure the voltage between the terminals of the ECM connector.
Standard voltage

Tester Connections	Specified Conditions
#10 (C20-108) - E01 (C20-45)	11 to 14 V
#20 (C20-107) - E01 (C20-45)	
#30 (C20-106) - E01 (C20-45)	
#40 (C20-105) - E01 (C20-45)	

(d) Reconnect the ECM connector.

OK → **Go to step 12**

NG

11 CHECK HARNESS AND CONNECTOR (INJECTOR - ECM)

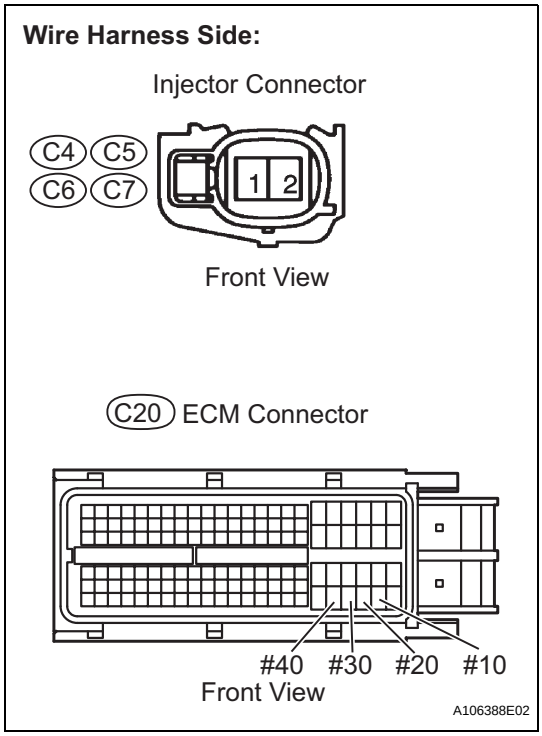

(a) Disconnect the injector connector (of the misfiring cylinder).
(b) Disconnect the C20 ECM connector.
(c) Turn the ignition switch to ON.
(d) Measure the resistance and voltage between the injector and the ECM connector terminals.

Standard voltage

Cylinder	Tester Connections	Specified Conditions
No. 1	C4-1 - Ground	11 to 14 V
No. 2	C5-1 - Ground	
No. 3	C6-1 - Ground	
No. 4	C7-1 - Ground	

Standard resistance

Cylinder	Tester Connections	Specified Conditions
No. 1	C4-2 - Ground	10 kΩ or higher
	C4-2 - C20-108 (#10)	Below 1 Ω
No. 2	C5-2 - Ground	10 kΩ or higher
	C5-2 - C20-107 (#20)	Below 1 Ω
No. 3	C6-2 - Ground	10 kΩ or higher
	C6-2 - C20-106 (#30)	Below 1 Ω
No. 4	C7-2 - Ground	10 kΩ or higher
	C7-2 - C20-105 (#40)	Below 1 Ω

(e) Reconnect the injector connector.
(f) Reconnect the ECM connector.

NG → **REPAIR OR REPLACE HARNESS OR CONNECTOR**

OK

12 CHECK FUEL INJECTOR OF MISFIRING CYLINDER

(a) Check the injector injection (whether fuel volume is high or low, and whether injection pattern is poor).

NG → **REPLACE FUEL INJECTOR ASSEMBLY**

OK

13 CHECK VALVE CLEARANCE OF MISFIRING CYLINDER

NG → **ADJUST VALVE CLEARANCE**

OK

14	CHECK AIR INDUCTION SYSTEM

(a) Check the air induction system for vacuum leakage.
OK:
No leakage from air induction system.

NG → **REPAIR OR REPLACE AIR INDUCTION SYSTEM**

OK ↓

15	CHECK VALVE TIMING (See page ES-71)

NG → **ADJUST VALVE TIMING**

OK ↓

16	CHECK FUEL PRESSURE

(a) Check the fuel pressure (See page FU-7).

NG → **CHECK AND REPLACE FUEL PUMP, PRESSURE REGULATOR, FUEL PIPE LINE AND FILTER**

OK ↓

17	READ VALUE USING INTELLIGENT TESTER (COOLANT TEMP) (See page ES-148)

NG → **REPLACE ENGINE COOLANT TEMPERATURE SENSOR**

OK ↓

18	READ VALUE USING INTELLIGENT TESTER (MAF) (See page ES-147)

NG → **REPLACE MASS AIR FLOW METER**

OK ↓

CHECK FOR INTERMITTENT PROBLEMS

ES

DTC	P0327	Knock Sensor 1 Circuit Low Input (Bank 1 or Single Sensor)

DTC	P0328	Knock Sensor 1 Circuit High Input (Bank 1 or Single Sensor)

DESCRIPTION

Flat type knock sensors (non-resonant type) have structures that can detect vibrations over a wide band of frequencies: between approximately 6 kHz and 15 kHz.
A knock sensor is fitted onto the engine block to detect engine knocking.
The knock sensor contains a piezoelectric element which generates a voltage when it becomes deformed. The voltage is generated when the engine block vibrates due to knocking. Any occurrence of engine knocking can be suppressed by delaying the ignition timing.

DTC No.	DTC Detection Conditions	Trouble Areas
P0327	Output voltage of knock sensor 0.5 V or less (1 trip detection logic)	• Short in knock sensor circuit • Knock sensor • ECM
P0328	Output voltage of knock sensor 4.5 V or more (1 trip detection logic)	• Open in knock sensor circuit • Knock sensor • ECM

HINT:
When any of DTCs P0327 and P0328 are set, the ECM enters fail-safe mode. During fail-safe mode, the ignition timing is delayed to its maximum retardation. Fail-safe mode continues until the ignition switch is turned to OFF.
Reference: Inspection using an oscilloscope

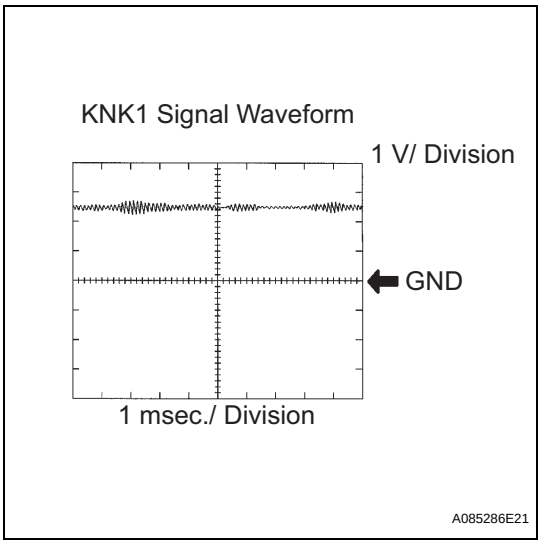

The correct waveform is as shown.

Items	Contents
Terminals	KNK1 - EKNK
Equipment Settings	1 V/Division 1 msec./Division
Conditions	Keep engine speed at 4,000 rpm with warm engine

MONITOR DESCRIPTION

If the output voltage transmitted by the knock sensor remains low or high for more than 1 second, the ECM interprets this as a malfunction in the sensor circuit, and sets a DTC.
The monitor for DTCs P0327 and P0328 begins to run when 5 seconds have elapsed since the engine was started.
If the malfunction is not repaired successfully, either DTC P0327 or P0328 is set 5 seconds after the engine is next started.

MONITOR STRATEGY

Related DTCs	P0327: Knock sensor range check (Low voltage) P0328: Knock sensor range check (High voltage)
Required Sensors/Components (Main)	Knock sensor
Required Sensors/Components (Related)	-
Frequency of Operation	Continuous
Duration	1 second
MIL Operation	Immediate
Sequence of Operation	None

TYPICAL ENABLING CONDITIONS

Monitor runs whenever following DTCs not present	None
Battery voltage	10.5 V or more
Time after engine start	5 seconds or more

TYPICAL MALFUNCTION THRESHOLDS

Knock Sensor Range Check (Low voltage) P0327:

Knock sensor voltage	Less than 0.5 V

Knock Sensor Range Check (High voltage) P0328:

Knock sensor voltage	More than 4.5 V

WIRING DIAGRAM

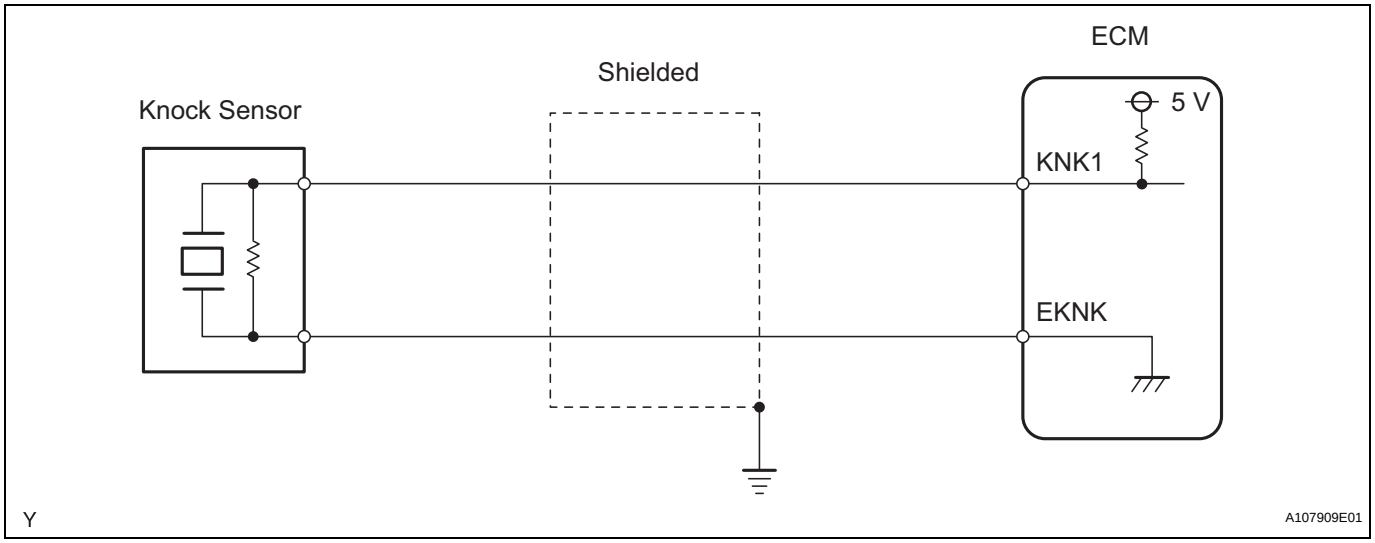

INSPECTION PROCEDURE

HINT:
Read freeze frame data using an intelligent tester. Freeze frame data record the engine condition when malfunctions are detected. When troubleshooting, freeze frame data can help determine if the vehicle was moving or stationary, if the engine was warmed up or not, if the air-fuel ratio was lean or rich, and other data, from the time the malfunction occurred.

ES

1 READ VALUE USING INTELLIGENT TESTER (KNOCK FB VAL)

(a) Connect an intelligent tester to the DLC3.
(b) Start the engine and turn the tester ON.
(c) Warm up the engine.
(d) Select the following menu items: DIAGNOSIS / ENHANCED OBD II / DATA LIST / USER DATA / KNOCK FB VAL.
(e) Read the values displayed on the tester while driving the vehicle.
Standard:
The values change.
HINT

Malfunction does not occur	Knock Feedback Values change
Malfunctions occur	Knock Feedback Values do not change

HINT:
The knock feedback value change can be confirmed by running the engine at high load, for example, by activating the air conditioning system and revving up the engine.

OK → **CHECK FOR INTERMITTENT PROBLEMS**

NG

2 CHECK HARNESS AND CONNECTOR (ECM - KNOCK SENSOR)

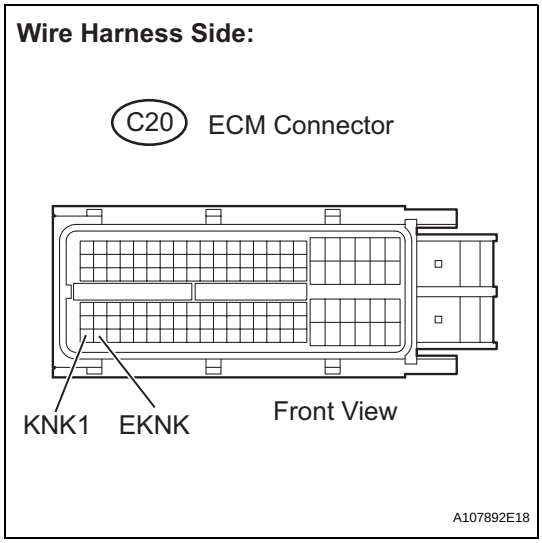

(a) Disconnect the C20 ECM connector.
(b) Measure the resistance between the terminals.
Standard resistance

Tester Connections	Specified Conditions
KNK1 (C20-110) - EKNK (C20-111)	120 to 280 kΩ at 20°C (68°F)

(c) Reconnect the ECM connector.

NG → **Go to step 4**

OK

3 INSPECT ECM (KNK1 VOLTAGE)

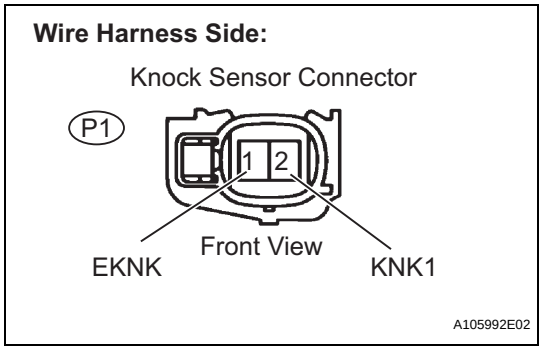

(a) Disconnect the P1 knock sensor connector.
(b) Turn the ignition switch to ON.
(c) Measure the voltage between the knock sensor terminals.
Standard voltage

Tester Connections	Specified Conditions
KNK1 (P1-2) - EKNK (P1-1)	4.5 to 5.5 V

(d) Reconnect the knock sensor connector.

NOTICE:
Fault may be intermittent. Check the wire harness and connectors carefully and retest.

NG → **REPLACE ECM**

OK

CHECK FOR INTERMITTENT PROBLEMS

4 INSPECT KNOCK SENSOR

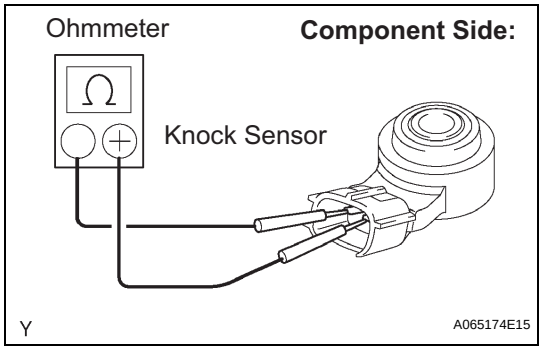

(a) Remove the knock sensor.
(b) Measure the resistance between the terminals.
Standard resistance

Tester Connections	Specified Conditions
KNK1 (2) - EKNK (1)	120 to 280 kΩ at 20°C (68°F)

(c) Reinstall the knock sensor.

NG → **REPLACE KNOCK SENSOR**

OK

REPAIR OR REPLACE HARNESS OR CONNECTOR

ES

DTC	P0335	Crankshaft Position Sensor "A" Circuit

DTC	P0339	Crankshaft Position Sensor "A" Circuit Intermittent

DESCRIPTION

The Crankshaft Position (CKP) sensor system consists of a CKP sensor plate and a pickup coil.
The sensor plate has 34 teeth and is installed on the crankshaft. The pickup coil is made of wound copper wire, an iron core and magnet. The sensor plate rotates and, as each tooth passes through the pickup coil, a pulse signal is created. The pickup coil generates 34 signals per engine revolution. Based on these signals, the ECM calculates the crankshaft position and engine RPM. Using these calculations, the fuel injection time and ignition timing are controlled.

DTC No.	DTC Detection Conditions	Trouble Areas
P0335	• No CKP sensor signal to ECM while cranking (1 trip detection logic) • No CKP sensor signal to ECM at engine speed of 600 rpm or more (1 trip detection logic)	• Open or short in CKP sensor circuit • CKP sensor • CKP sensor plate • ECM
P0339	Under conditions (a), (b) and (c), no CKP sensor signal to ECM for 0.05 seconds or more (1 trip detection logic): (a) Engine speed 1,000 rpm or more (b) Starter signal OFF (c) 3 seconds or more have elapsed since starter signal switched from ON to OFF	• Open or short in CKP sensor circuit • CKP sensor • CKP sensor plate • ECM

Reference: Inspection using an oscilloscope.

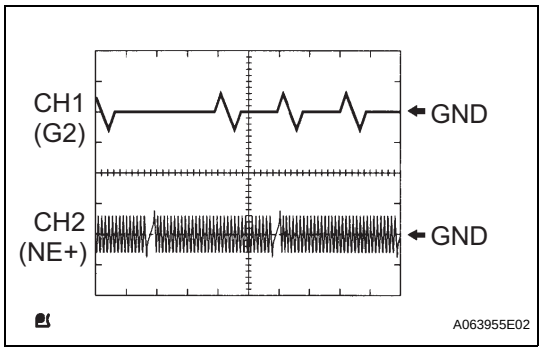

HINT:
- The correct waveform is as shown.
- G2+ stands for the Camshaft Position (CMP) sensor signal, and NE+ stands for the CKP sensor signal.
- Failure grounding of the shielded wire may causes noise in waveforms.

Items	Contents
Terminals	CH1: G2+ - NE- CH2: NE+ - NE-
Equipment Settings	5 V/Division, 20 msec./Division
Conditions	Cranking or idling

MONITOR DESCRIPTION

If there is no signal from the CKP sensor despite the engine revolving, the ECM interprets this as a malfunction of the sensor.
If the malfunction is not repaired successfully, a DTC is set 10 seconds after the engine is next started.

MONITOR STRATEGY

Related DTCs	P0335: CKP sensor range check or rationality
Required Sensors/Components (Main)	CKP sensor
Required Sensors/Components (Related)	CMP sensor
Frequency of Operation	Continuous
Duration	3 times
MIL Operation	Immediate
Sequence of Operation	None

TYPICAL ENABLING CONDITIONS

All:

Monitor runs whenever following DTCs not present	None

Case 1:

Time after starter OFF to ON	0.3 seconds or more
Number of CMP sensor signal pulse	6 times
Battery voltage	7 V or more
CMP sensor circuit fail	Not detected
Ignition switch	ON

Case 2:

Starter	OFF
Engine speed	More than 600 rpm
Time after starter from ON to OFF	3 seconds or more

TYPICAL MALFUNCTION THRESHOLDS

Case 1:

Number of CKP sensor signal pulse	132 or less, and 174 or more

Case 2:

Engine speed signal	No signal

COMPONENT OPERATING RANGE

CKP sensor	• CKP sensor output voltage fluctuates while crankshaft revolving • 34 CKP sensor signals per crankshaft revolution

WIRING DIAGRAM

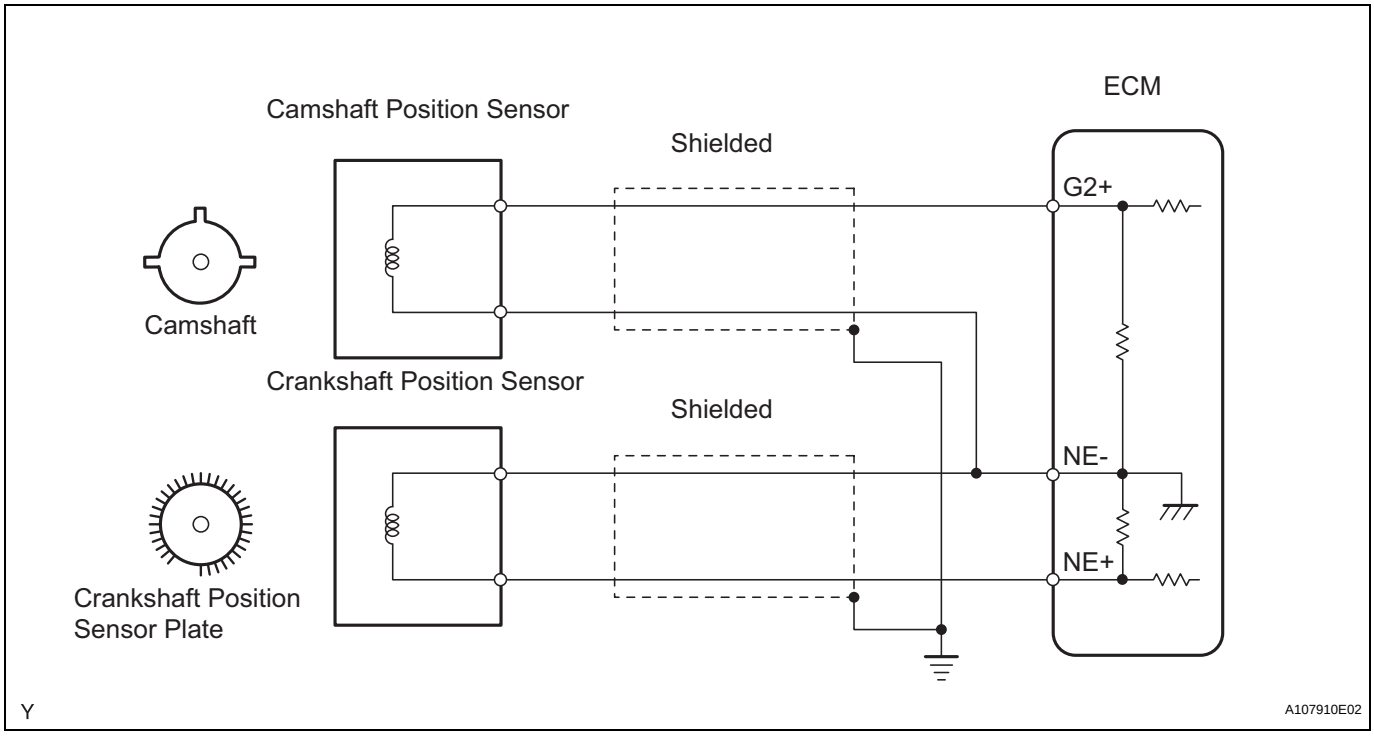

INSPECTION PROCEDURE

HINT:

- If no problem is found through this diagnostic troubleshooting procedure, troubleshooting the engine mechanical systems.
- Check the engine speed. The engine speed can be checked by using an intelligent tester. To check, follow the operation below:
  (a) Connect the intelligent tester to the DLC3.
  (b) Start the engine.
  (c) Turn the tester ON
  (d) Select the following menu items: DIAGNOSIS / ENHANCED OBD II / DATA LIST / PRIMARY / ENGINE SPD.
  The engine speed may be indicated as zero despite the engine revolving normally. This is caused by a lack of NE signals from the Crankshaft Position (CKP) sensor. Alternatively, the engine speed may be indicated as lower than the actual engine speed, if the CKP sensor output voltage is insufficient.
- Read freeze frame data using an intelligent tester. Freeze frame data record the engine condition when malfunctions are detected. When troubleshooting, freeze frame data can help determine if the vehicle was moving or stationary, if the engine was warmed up or not, if the air-fuel ratio was lean or rich, and other data, from the time the malfunction occurred.

1	READ VALUE USING INTELLIGENT TESTER (ENGINE SPD)

(a) Connect an intelligent tester to the DLC3.
(b) Turn the ignition switch to ON.
(c) Turn the tester ON.
(d) Select the following menu items: DIAGNOSIS / ENHANCED OBD II / DATA LIST / PRIMARY / ENGINE SPD.
(e) Start the engine.

(f) Read the values displayed on the tester while the engine is running.
Standard:
Correct values are displayed.
HINT:
- To check the engine speed change, display the graph on the tester.
- If the engine does not start, check the engine speed while cranking.
- If the engine speed indicated on the tester remains zero (0), there may be an open or short in the Crankshaft Position (CKP) sensor circuit.

OK → **CHECK FOR INTERMITTENT PROBLEMS**

ES

NG

2 INSPECT CRANKSHAFT POSITION SENSOR (RESISTANCE)

Component Side:

CKP Sensor

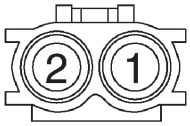

Front View

A078431E08

(a) Disconnect the C2 CKP sensor connector.
(b) Measure the resistance between terminals 1 and 2.
Standard resistance

Tester Connections	Conditions	Specified Conditions
1 - 2	Cold	985 to 1,600 Ω
1 - 2	Hot	1,265 to 1,890 Ω

HINT:
Terms cold and hot refer to the temperature of the coils.
Cold means approximately -10 to 50°C (14 to 122°F).
Hot means approximately 50 to 100°C (122 to 212°F).
(c) Reconnect the CKP sensor connector.

NG → **REPLACE CRANKSHAFT POSITION SENSOR**

OK

ES

3 CHECK HARNESS AND CONNECTOR (CRANKSHAFT POSITION SENSOR - ECM)

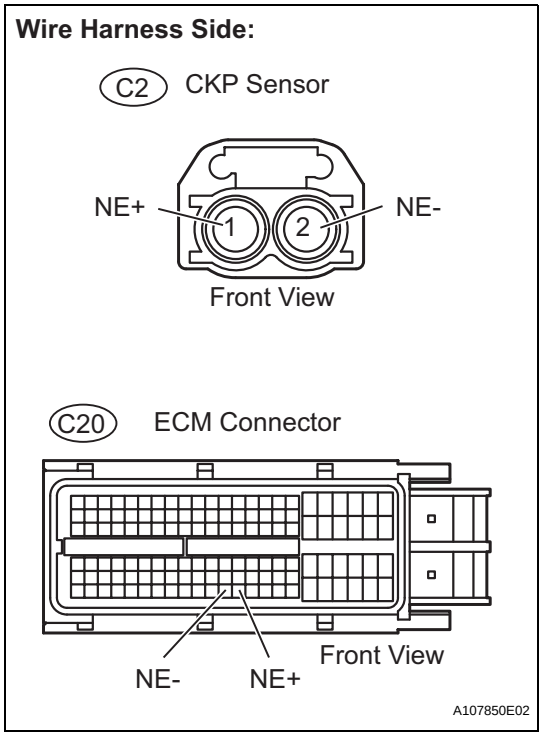

(a) Disconnect the C2 CKP sensor connector.
(b) Disconnect the C20 ECM connector.
(c) Check the resistance.

Standard resistance (Check for open)

Tester Connections	Specified Conditions
NE+ (C2-1) - NE+ (C20-122)	Below 1 Ω
NE- (C2-2) - NE- (C20-121)	

Standard resistance (Check for short)

Tester Connections	Specified Conditions
NE+ (C2-1) or NE+ (C20-122) - Body ground	10 kΩor higher
NE- (C2-2) or NE- (C20-121) - Body ground	

(d) Reconnect the ECM connector.
(e) Reconnect the CKP sensor connector.

NG → **REPAIR OR REPLACE HARNESS OR CONNECTOR**

OK

4 CHECK SENSOR INSTALLATION (CRANKSHAFT POSITION SENSOR)

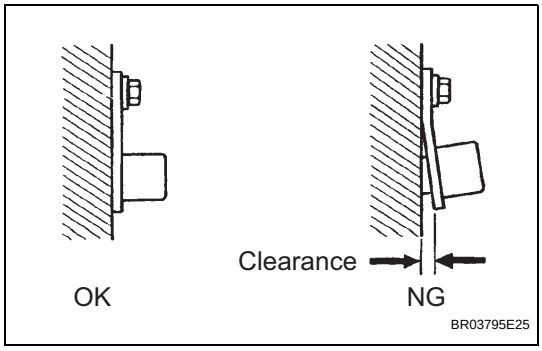

(a) Check the CKP sensor installation.
OK:
Sensor is installed correctly.

NG → **SECURELY REINSTALL SENSOR**

OK

5 CHECK CRANKSHAFT POSITION SENSOR PLATE (TEETH OF SENSOR PLATE)

(a) Check the teeth of the sensor plate.
OK:
Sensor plate does not have any cracks or deformation.

NG → **REPLACE CRANKSHAFT POSITION SENSOR PLATE**

OK

6	REPLACE CRANKSHAFT POSITION SENSOR

NEXT

7	CHECK WHETHER DTC OUTPUT RECURS

(a) Connect the intelligent tester to the DLC3.
(b) Turn the ignition switch to ON.
(c) Turn the tester ON.
(d) Clear DTCs (See page ES-34).
(e) Start the engine.
(f) Select the following menu items: DIAGNOSIS / ENHANCED OBD II / DTC INFO / CURRENT CODES.
(g) Read DTCs.

Result

Display (DTC Output)	Proceed To
No output	A
P0335 or P0339	B

HINT:
If the engine does not start, replace the ECM.

B → REPLACE ECM

A

END

DTC	P0340	Camshaft Position Sensor "A" Circuit (Bank 1 or Single Sensor)

DESCRIPTION

The Camshaft Position (CMP) sensor consists of a magnet and an iron core which is wrapped with copper wire, and is installed onto the cylinder head. When the camshaft rotates, each of 3 teeth on the camshaft passes through the CMP sensor. This activates the internal magnet in the sensor, generating a voltage in the copper wire. The camshaft rotation is synchronized with the crankshaft rotation. When the crankshaft turns twice, the voltage is generated 3 times in the CMP sensor. The generated voltage in the sensor acts as a signal, allowing the ECM to locate the camshaft position. This signal is then used to control ignition timing, fuel injection timing, and the VVT system.

ES

DTC No.	DTC Detection Conditions	Trouble Areas
P0340	Case 1 • No Camshaft Position (CMP) sensor signal to ECM while cranking (2 trip detection logic) Case 2 • Camshaft/Crankshaft misalignment detected at engine speed of 600 rpm or more (1 trip detection logic)	• Open or short in CMP sensor circuit • CMP sensor • Camshaft • Jumped tooth of timing chain • ECM

HINT:
DTC P0340 indicates a malfunction relating to the CMP sensor (+) circuit (the wire harness between the ECM and CMP sensor, and the CMP sensor itself).
Reference: Inspection using an oscilloscope

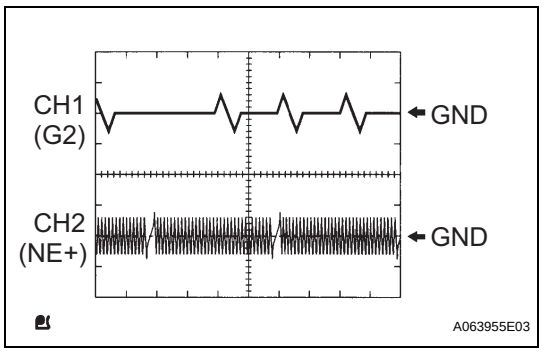

HINT:
- The correct waveform is as shown in the illustration.
- G2 stands for the CMP sensor signal, and NE+ stands for the Crankshaft Position (CKP) sensor signal.
- Grounding failure of the shielded wire may cause noise in waveforms.

Items	Contents
Terminals	CH1: G2 - NE- CH2: NE+ - NE-
Equipment Settings	5 V/Division, 20 ms/Division
Conditions	Cranking or idling

MONITOR DESCRIPTION

If no signal is transmitted by the CMP sensor despite the engine revolving, or the rotation of the camshaft and the crankshaft is not synchronized, the ECM interprets this as a malfunction of the sensor.
If the malfunction is not repaired successfully, a DTC is set 10 seconds after the engine is next started.

MONITOR STRATEGY

Related DTCs	P0340: Camshaft position sensor range check P0340: Camshaft position/crankshaft position misalignment
Required Sensors/Components (Main)	Camshaft Position (CMP) sensor

Required Sensors/Components (Related)	Crankshaft Position (CKP) sensor
Frequency of Operation	Continuous
Duration	4 seconds: CMP sensor range check 5 seconds: Camshaft position/crankshaft position misalignment
MIL Operation	2 driving cycles: CMP sensor range check Immediate: Camshaft position/crankshaft position misalignment
Sequence of Operation	None

TYPICAL ENABLING CONDITIONS

All:

Monitor runs whenever following DTCs not present	None

Camshaft Position Sensor Range Check:

Starter	ON
Minimal battery voltage while starter ON	Less than 11 V

Camshaft Position/Crankshaft Position Misalignment:

Engine speed	600 rpm or more
Starter	OFF

TYPICAL MALFUNCTION THRESHOLDS

Camshaft Position Sensor Range Check:

CMP sensor signal	No signal

Camshaft Position/Crankshaft Position Misalignment:

Camshaft position and crankshaft position phase	Misaligned

COMPONENT OPERATING RANGE

CMP sensor	• CMP sensor output voltage fluctuates while camshaft revolving • 3 CMP sensor signals per 2 crankshaft revolutions

WIRING DIAGRAM

Refer to DTC P0335 (See page ES-163).

INSPECTION PROCEDURE

HINT:

Read freeze frame data using an intelligent tester. Freeze frame data record the engine condition when malfunctions are detected. When troubleshooting, freeze frame data can help determine if the vehicle was moving or stationary, if the engine was warmed up or not, if the air-fuel ratio was lean or rich, and other data, from the time the malfunction occurred.

ES

1 INSPECT CAMSHAFT POSITION SENSOR (RESISTANCE)

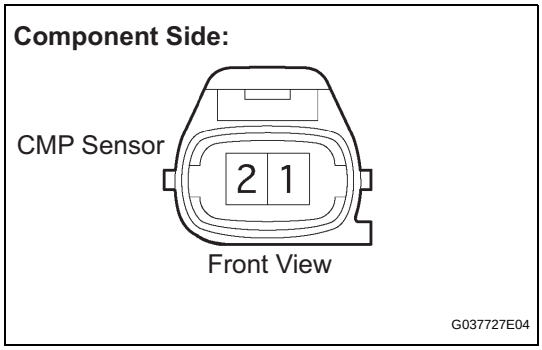

(a) Disconnect the C18 Camshaft Position (CMP) sensor connector.
(b) Measure the resistance between terminals 1 and 2.
Standard resistance

Tester Connections	Conditions	Specified Conditions
1 - 2	Cold	1,630 to 2,740 Ω
1 - 2	Hot	2,065 to 3,225 Ω

HINT:
Terms cold and hot refer to the temperature of the coils.
Cold means approximately -10° to 50°C (14 °to 122°F).
Hot means approximately 50° to 100°C (122°to 212°F).
(c) Reconnect the CMP sensor connector.

NG → **REPLACE CAMSHAFT POSITION SENSOR**

OK

2 CHECK HARNESS AND CONNECTOR (CAMSHAFT POSITION SENSOR - ECM)

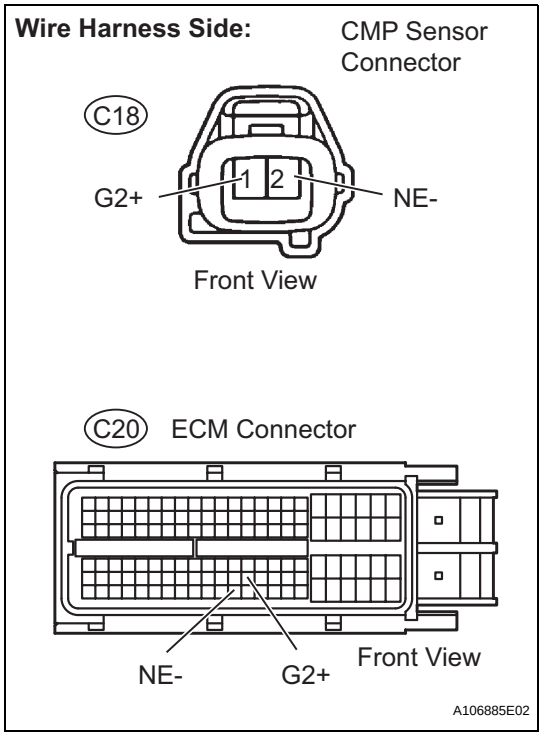

(a) Disconnect the C18 CMP sensor connector.
(b) Disconnect the C20 ECM connector.
(c) Check the resistance.
Standard resistance (Check for open)

Tester Connections	Specified Conditions
G2+ (C18-1) - G2+ (C20-99)	Below 1 Ω
NE- (C18-2) - NE- (C20-121)	

Standard resistance (Check for short)

Tester Connections	Specified Conditions
G2+ (C18-1) or G2+ (C20-99) - Body ground	10 kΩ or higher
NE- (C18-2) or NE- (C20-121) - Body ground	

(d) Reconnect the ECM connector.
(e) Reconnect the CMP sensor connector.

NG → **REPAIR OR REPLACE HARNESS OR CONNECTOR**

OK

3	CHECK SENSOR INSTALLATION (CAMSHAFT POSITION SENSOR)

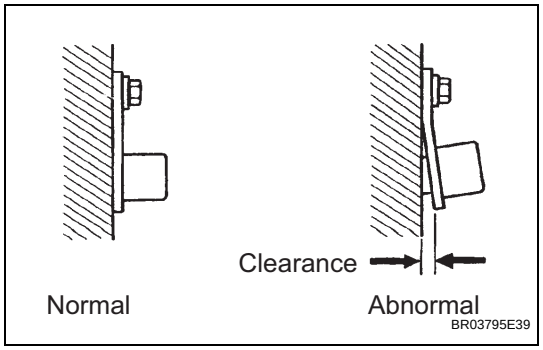

(a) Check the CMP sensor installation.
OK:
Sensor is installed correctly.

NG → **SECURELY REINSTALL SENSOR**

OK

4	CHECK VALVE TIMING (See page ES-71)

NG → **ADJUST VALVE TIMING**

OK

5	CHECK CAMSHAFT

(a) Check the teeth of the camshaft.
OK:
Camshaft teeth do not have any cracks or deformation.

NG → **REPLACE CAMSHAFT**

OK

6	REPLACE CAMSHAFT POSITION SENSOR

NEXT

7	CHECK WHETHER DTC OUTPUT RECURS

(a) Connect the intelligent tester to the DLC3.
(b) Turn the ignition switch to ON.
(c) Turn the tester ON.
(d) Clear DTCs (See page ES-34).
(e) Start the engine.
(f) Select the following menu items: DIAGNOSIS / ENHANCED OBD II / DTC INFO / PENDING CODES.
(g) Read DTCs.

Result

Display (DTC Output)	Proceed To
No output	A

ES

Display (DTC Output)	Proceed To
P0340	B

HINT:
If the engine does not start, replace the ECM.

B → **REPLACE ECM**

A

END

DTC	P0351	Ignition Coil "A" Primary / Secondary Circuit

DTC	P0352	Ignition Coil "B" Primary / Secondary Circuit

DTC	P0353	Ignition Coil "C" Primary / Secondary Circuit

DTC	P0354	Ignition Coil "D" Primary / Secondary Circuit

DESCRIPTION

HINT:

- These DTCs indicate malfunctions relating to the primary circuit.
- If DTC P0351 is set, check No. 1 ignition coil with igniter circuit.
- If DTC P0352 is set, check No. 2 ignition coil with igniter circuit.
- If DTC P0353 is set, check No. 3 ignition coil with igniter circuit.
- If DTC P0354 is set, check No. 4 ignition coil with igniter circuit.

A Direct Ignition System (DIS) is used on this vehicle.

The DIS is a 1-cylinder ignition system in which each cylinder is ignited by one ignition coil and one spark plug is connected to the end of each secondary wiring. A powerful voltage, generated in the secondary wiring, is applied directly to each spark plug. The sparks of the spark plugs pass from the center electrode to the ground electrodes.

The ECM determines the ignition timing and transmits the ignition (IGT) signals to each cylinder. Using the IGT signal, the ECM turns the power transistor inside the igniter on and off. The power transistor, in turn, switches on and off the current to the primary coil. When the current to the primary coil is cut off, a powerful voltage is generated in the secondary coil. This voltage is applied to the spark plugs, causing them to spark inside the cylinders. As the ECM cuts the current to the primary coil, the igniter sends back an ignition confirmation (IGF) signal to the ECM, for each cylinder ignition.

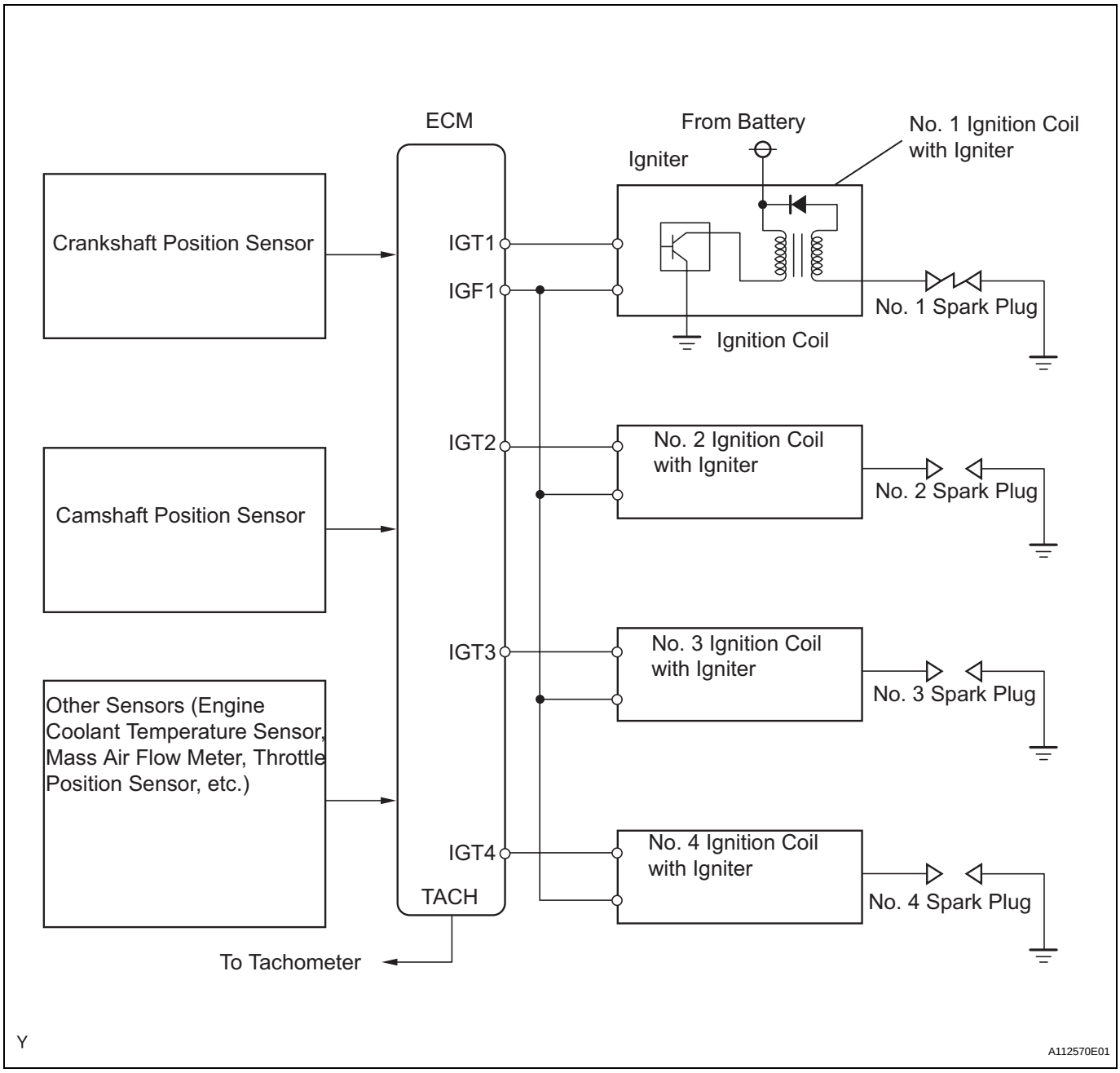

DTC No.	DTC Detection Conditions	Trouble Areas
P0351 P0352 P0353 P0354	No IGF signal to ECM while engine running (1 trip detection logic)	• Ignition system • Open or short in IGF1 or IGT circuit (1 to 4) between ignition coil with igniter and ECM • No. 1 to No. 4 ignition coils with igniters • ECM

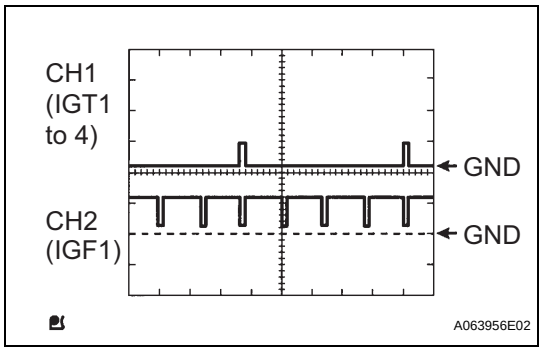

Reference: Inspection using an oscilloscope.
While cranking or idling the engine, check the waveform between terminals IGT (1 to 4) and E1, and IGF1 and E1 of the ECM connector.

Items	Contents
Terminals	CH1: IGT1, IGT2, IGT3, IGT4 - E1 CH2: IGF1 - E1
Equipment Settings	2 V/Division 20 msec./Division
Conditions	Cranking or idling

MONITOR DESCRIPTION

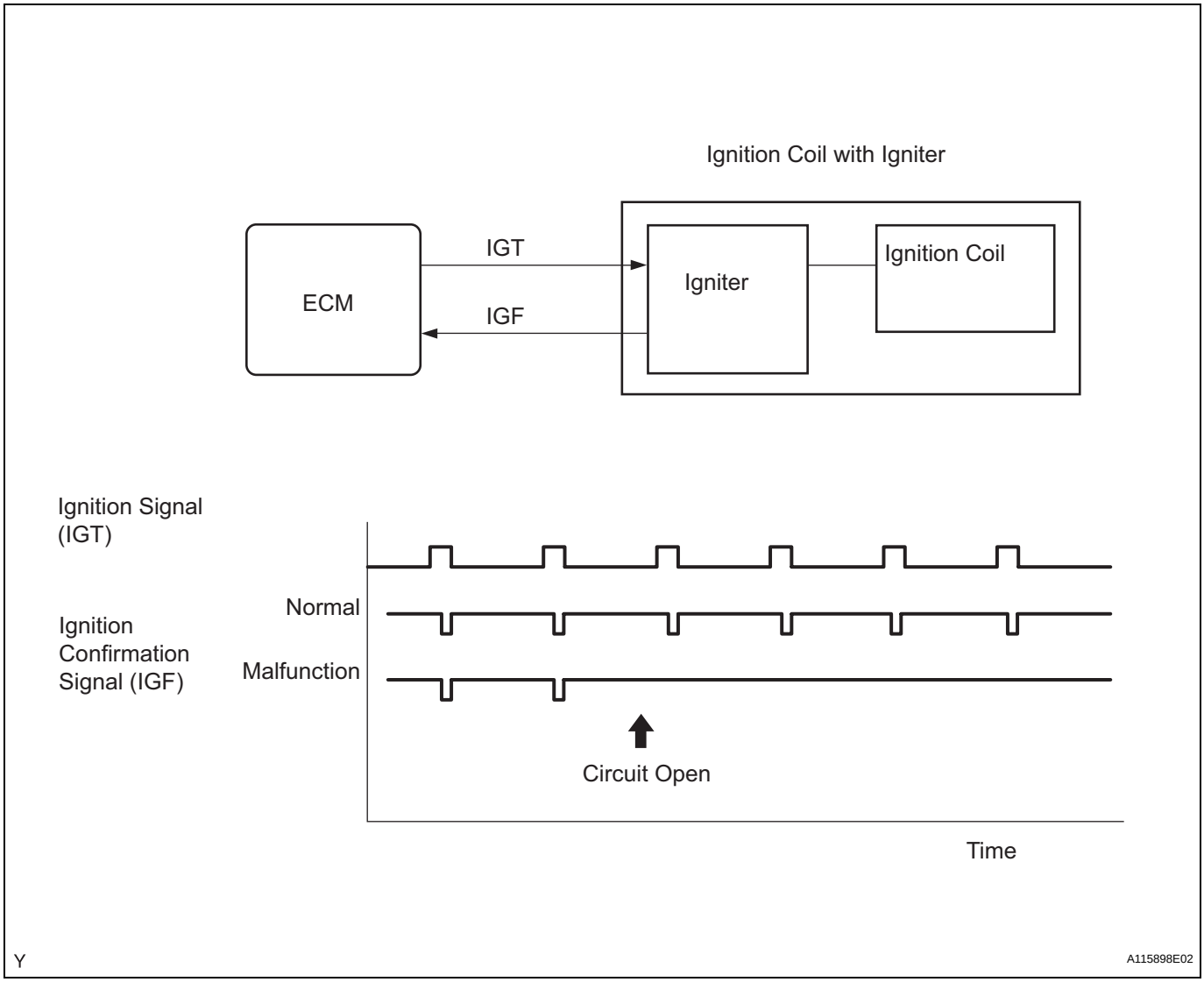

If the ECM does not receive any IGF signals despite transmitting the IGT signal, it interprets this as a fault in the igniter and sets a DTC.
If the malfunction is not repaired successfully, a DTC is set 1 second after the engine is next started.

MONITOR STRATEGY

Related DTCs	P0351: Igniter (cylinder 1) malfunction P0352: Igniter (cylinder 2) malfunction P0353: Igniter (cylinder 3) malfunction P0354: Igniter (cylinder 4) malfunction
Required Sensors/Components (Main)	Igniter
Required Sensors/Components (Related)	Crankshaft position sensor
Frequency of Operation	Continuous
Duration	0.256 seconds and 4 sparks
MIL Operation	Immediate
Sequence of Operation	None

TYPICAL ENABLING CONDITIONS

Monitor runs whenever following DTCs not present	None
Either of following conditions A or B met	-

A. Engine RPM	1,500 rpm or less
B. Starter	OFF
Either of following conditions C or D met	-
C. Both of following conditions (a) and (b) met	-
(a) Engine speed	500 rpm or less
(b) Battery voltage	6 V or more
D. All of following conditions (a), (b) and (c) met	-
(a) Engine speed	More than 500 rpm
(b) Battery voltage	10 V or more
(c) Number of sparks after CPU reset	5 sparks or more

TYPICAL MALFUNCTION THRESHOLDS

IGF signal	ECM does not receive any IGF signal despite ECM sending IGT signal to igniter

COMPONENT OPERATING RANGE

IGF signal	Igniter transmits IGF signal when it receives IGT signal from ECM

WIRING DIAGRAM

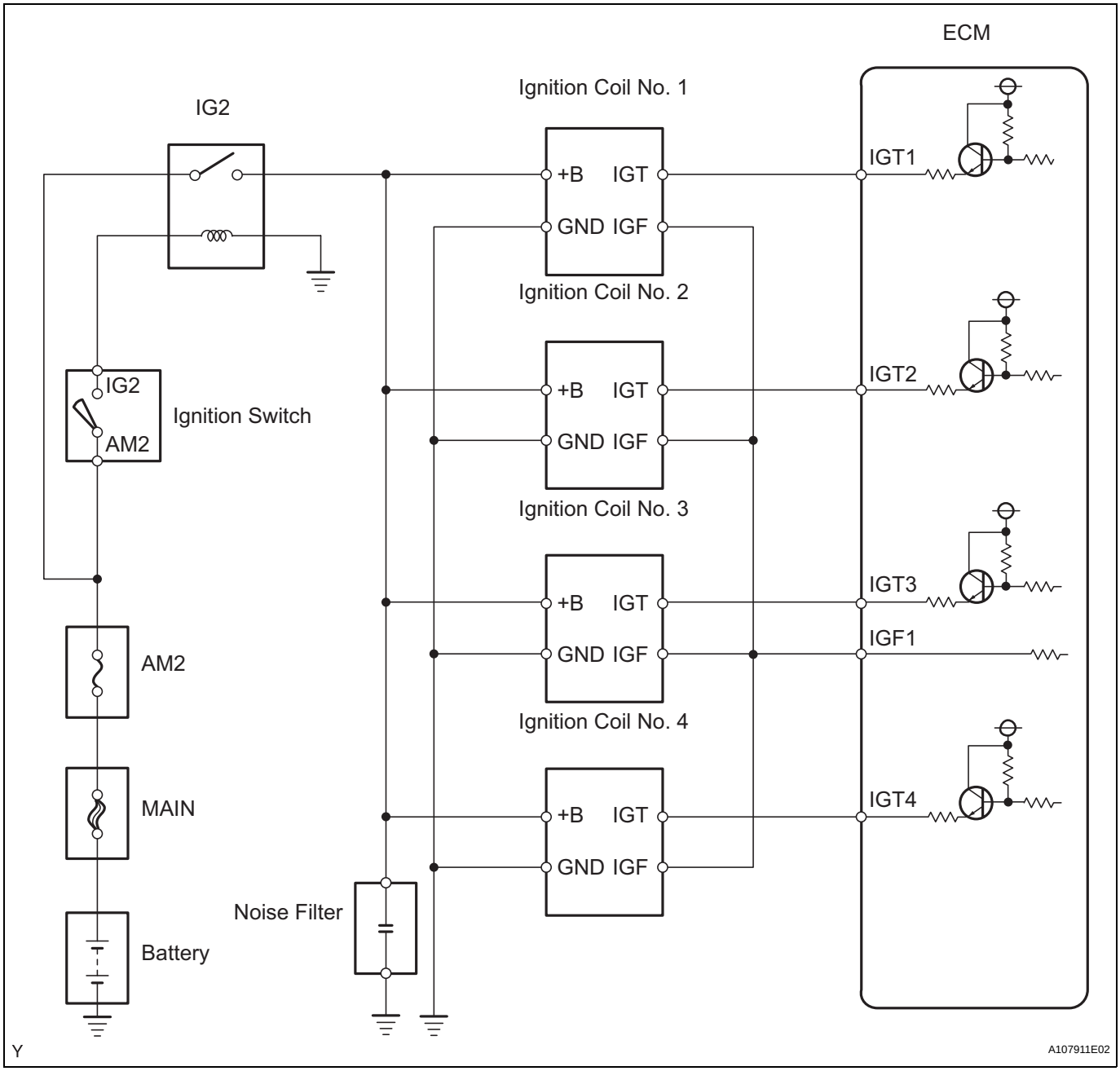

INSPECTION PROCEDURE

HINT:

Read freeze frame data using an intelligent tester. Freeze frame data record the engine condition when malfunctions are detected. When troubleshooting, freeze frame data can help determine if the vehicle was moving or stationary, if the engine was warmed up or not, if the air-fuel ratio was lean or rich, and other data, from the time the malfunction occurred.

1 INSPECT IGNITION COIL ASSEMBLY (POWER SOURCE)

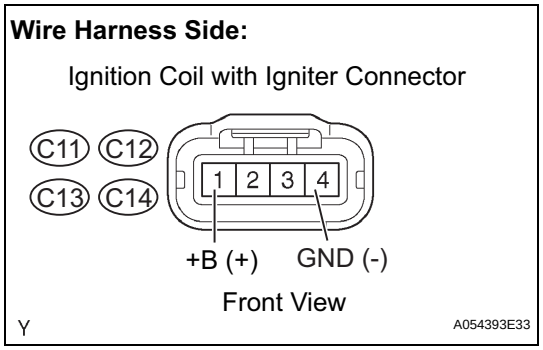

(a) Disconnect the ignition coil with igniter connector.
(b) Check the resistance.
Standard resistance (Check for open)

Tester Connections	Specified Conditions
GND (C11-4) - Body ground	Below 1 Ω
GND (C12-4) - Body ground	
GND (C13-4) - Body ground	
GND (C14-4) - Body ground	

(c) Turn the ignition switch to ON.
(d) Measure the voltage between the terminals of the wire harness side connector.
Standard voltage

Tester Connections	Specified Conditions
+B (C11-1) - GND (C11-4)	11 to 14 V
+B (C12-1) - GND (C12-4)	
+B (C13-1) - GND (C13-4)	
+B (C14-1) - GND (C14-4)	

(e) Reconnect the ignition coil with igniter connector.

NG → **REPAIR OR REPLACE HARNESS OR CONNECTOR**

OK

2 CHECK HARNESS AND CONNECTOR (IGNITION COIL ASSEMBLY - ECM)

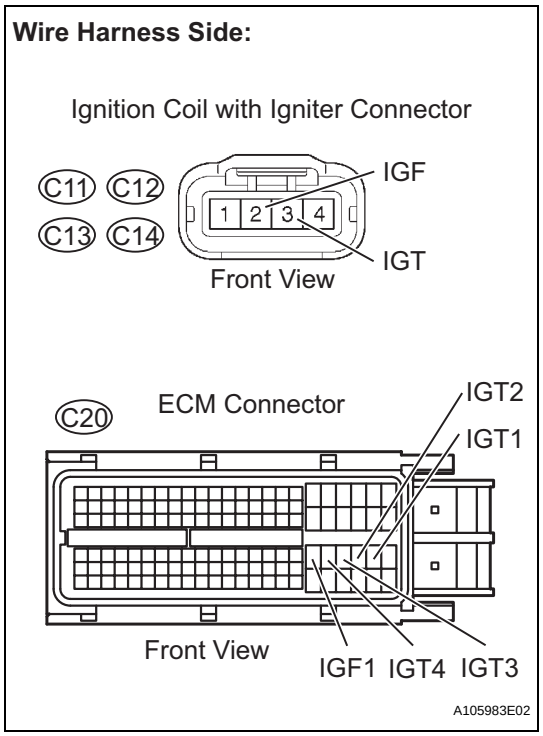

(a) Disconnect the ignition coil with connector.
(b) Disconnect the C20 ECM connector.
(c) Check the resistance.
Standard resistance (Check for open)

Tester Connections	Specified Conditions
IGF (C11-2) - IGF1 (C20-81)	Below 1 Ω
IGF (C12-2) - IGF1 (C20-81)	
IGF (C13-2) - IGF1 (C20-81)	
IGF (C14-2) - IGF1 (C20-81)	

Standard resistance (Check for open)

Tester Connections	Specified Conditions
IGT (C11-3) - IGT1 (C20-85)	Below 1 Ω
IGT (C12-3) - IGT2 (C20-84)	
IGT (C13-3) - IGT3 (C20-83)	
IGT (C14-3) - IGT4 (C20-82)	

ES

Standard resistance (Check for short)

Tester Connections	Specified Conditions
IGF (C11-2) or IGF1 (C20-81) - Body ground	10 kΩ or higher
IGF (C12-2) or IGF1 (C20-81) - Body ground	
IGF (C13-2) or IGF1 (C20-81) - Body ground	
IGF (C14-2) or IGF1 (C20-81) - Body ground	

Standard resistance (Check for short)

Tester Connections	Specified Conditions
IGT (C11-3) or IGT1 (C20-85) - Body ground	10 kΩ or higher
IGT (C12-3) or IGT2 (C20-84) - Body ground	
IGT (C13-3) or IGT3 (C20-83) - Body ground	
IGT (C14-3) or IGT4 (C20-82) - Body ground	

(d) Reconnect the ECM connector.
(e) Reconnect the ignition coil with igniter connector.

NG → **REPAIR OR REPLACE HARNESS OR CONNECTOR**

OK

3 CHECK WHETHER DTC OUTPUT RECURS (DTC P0351, P0352, P0353 OR P0354)

(a) Connect an intelligent tester to the DLC3.
(b) Turn the ignition switch to ON and turn the tester ON.
(c) Clear DTCs (See page ES-34).
(d) Shuffle arrangement of the ignition coils with igniters (among No. 1 to No. 4 cylinders).
NOTICE:
Do not shuffle the connectors.
(e) Perform a simulation test.
(f) Check DTCs displayed on the tester.

Result

Display (DTC Output)	Proceed To
Same DTC output	A
Different ignition coil DTC output	B

B → **REPLACE IGNITION COIL ASSEMBLY**

A

REPLACE ECM

DTC	P0420	Catalyst System Efficiency Below Threshold (Bank 1)

MONITOR DESCRIPTION

The ECM uses sensors mounted in front of and behind the Three-Way Catalytic Converter (TWC) to monitor its efficiency.
The first sensor, the Air-Fuel Ratio (A/F) sensor, sends pre-catalyst information to the ECM. The second sensor, the Heated Oxygen (HO2) sensor, sends post-catalyst information to the ECM.
In order to detect any deterioration in the TWC, the ECM calculates the Oxygen Storage Capacity (OSC) of the TWC. This calculation is based on the voltage output of the HO2 sensor while performing active air-fuel ratio control, rather than the conventional detecting method, which uses the locus ratio.
The OSC value is an indication of the oxygen storage capacity of the TWC. When the vehicle is being driven with a warm engine, active air-fuel ratio control is performed for approximately 15 to 20 seconds. When it is performed, the ECM deliberately sets the air-fuel ratio to lean or rich levels. If the rich-lean cycle of the HO2 sensor is long, the OSC becomes greater. There is a direct correlation between the OSCs of the HO2 sensor and the TWC.
The ECM uses the OSC value to determine the state of the TWC. If any deterioration has occurred, it illuminates the MIL and sets the DTC.

DTC No.	DTC Detection Conditions	Trouble Areas
P0420	OSC value smaller than standard value under active air-fuel ratio control (2 trip detection logic)	• Front exhaust pipe (with TWC) • Gas leakage from exhaust system • Air-Fuel Ratio (A/F) sensor (sensor 1) • Heated Oxygen (HO2) sensor (sensor 2)

MONITOR STRATEGY

Related DTCs	P0420: Catalyst Deterioration
Required Sensors/Components (Main)	A/F sensor and HO2 sensor
Required Sensors/Components (Related)	Intake air temperature sensor, mass air flow meter, crankshaft position sensor and engine coolant temperature sensor
Frequency of Operation	Once per driving cycle
Duration	About 30 seconds
MIL Operation	2 driving cycles
Sequence of Operation	None

TYPICAL ENABLING CONDITIONS

Monitor runs whenever following DTCs not present	P0011 (VVT System 1 - Advance) P0012 (VVT System 1 - Retard) P0031, 32 (A/F Sensor heater - Sensor 1) P0037, 38 (O2 Sensor heater - Sensor 2) P0100 - P0103 (MAF meter) P0115 - P0118 (ECT sensor) P0120 - P0223, P2135 (TP sensor) P0125 (Insufficient ECT for Closed Loop) P0136 (O2 Sensor - Sensor 2) P0171, P0172 (Fuel system) P0300 - P0304 (Misfire) P0335 (CKP sensor) P0340 (CMP sensor) P0351 - P0354 (Igniter) P0500 (VSS) P2196 (A/F Sensor - rationality) P2A00 (A/F Sensor - slow response)
Battery voltage	11 V or more
Intake air temperature	-10°C (14°F) or more

Engine coolant temperature	75°C (167°F) or more
Atmospheric pressure	76 kPa (570 mmHg) or more
Idling	OFF
Engine RPM	Less than 4,000 rpm
A/F sensor status	Activated
Fuel system status	Closed loop
Engine load	10 to 80 %
All of following conditions (a), (b) and (c) met	-
(a) Mass air flow rate	2.5 to 27 g/sec
(b) Estimated front catalyst temperature	620° to 800°C (1,148° to 1,472°F)
(c) Estimated rear catalyst temperature	400° to 900°C (752° to 1,652°F)
Rear HO2 sensor heater monitor	Completed
Shift position	4th or 5th (M/T) 3rd or 4th (A/T)

TYPICAL MALFUNCTION THRESHOLDS

Oxygen Storage Capacity (OSC) of Three-Way Catalytic Converter (TWC)	Less than 0.046875 g

MONITOR RESULT

Refer to CHECKING MONITOR STATUS (See page ES-17).

CONFIRMATION DRIVING PATTERN

HINT:
Performing this confirmation pattern will activate the catalyst monitor. This is very useful for verifying the completion of a repair.

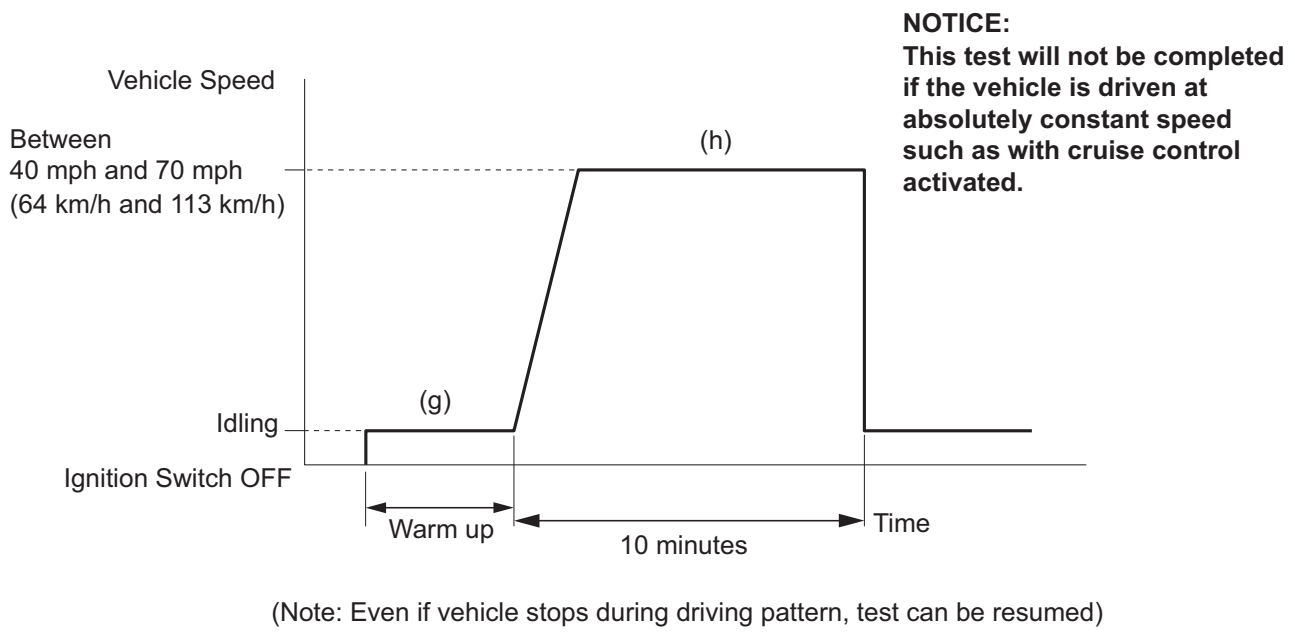

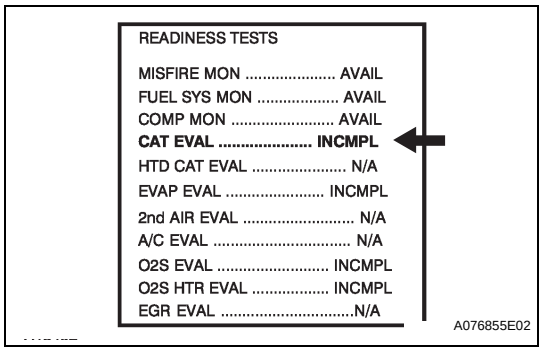

(a) Connect the intelligent tester to the DLC3.
(b) Turn the ignition switch to ON.
(c) Turn the tester ON.
(d) Clear DTCs (where set) (See page ES-34).
(e) Select the following menu items: DIAGNOSIS / CARB OBD II / READINESS TESTS.
(f) Check that CAT EVAL is INCMPL (incomplete).
(g) Start the engine and warm it up.
(h) Drive the vehicle at between 40 mph and 70 mph (64 km/h and 113 km/h) for at least 10 minutes.
(i) Note the state of the Readiness Tests items. Those items will change to COMPL (complete) as CAT EVAL monitor operates.
(j) On the tester, select the following menu items: DIAGNOSIS / ENHANCED OBD II / DTC INFO / PENDING CODES and check if any DTCs (any pending DTCs) are set.
HINT:
If CAT EVAL does not change to COMPL, and any pending DTCs fail to set, extend the driving time.

CONDITIONING FOR SENSOR TESTING

HINT:
Perform the operation with the engine speeds and time durations described below prior to checking the waveforms of the A/F and HO2 sensors. This is in order to activate the sensors sufficiently to obtain the appropriate inspection results.

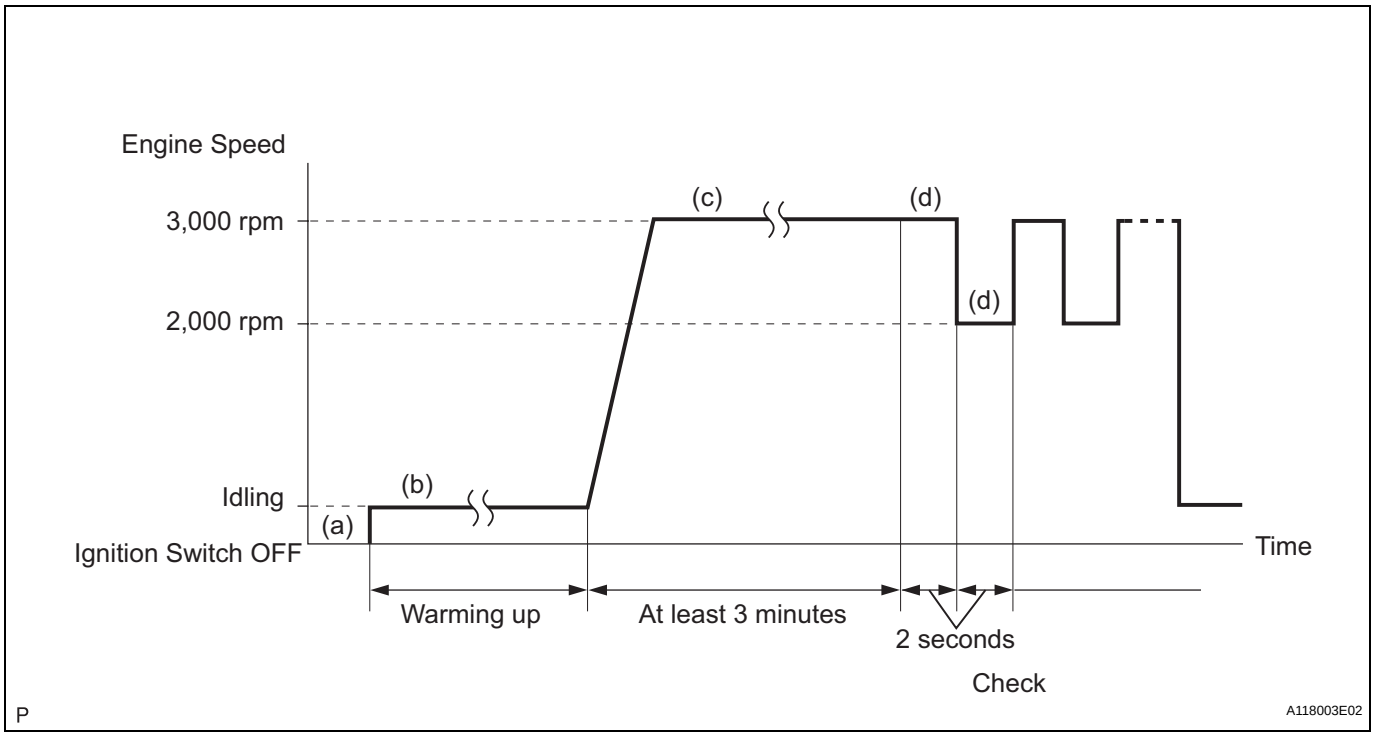

(a) Connect an intelligent tester to the DLC3.

(b) Start the engine and warm it up with all the accessories switched OFF, until the engine coolant temperature stabilizes.
(c) Run the engine at an engine speed of between 2,500 rpm and 3,000 rpm for at least 3 minutes.
(d) While running the engine at 3,000 rpm and 2,000 rpm alternating at 2 second intervals, check the waveforms of the A/F and HO2 sensors using the tester.
HINT:
- If either voltage output of the Air-Fuel Ratio (A/F) or Heated Oxygen (HO2) sensor does not fluctuate, or there is a noise in the waveform of either sensor the sensor may be malfunctioning.
- If the voltage outputs of both the sensors remain lean or rich, the air-fuel ratio may be extremely lean or rich. In such cases, perform the following A/F CONTROL using an intelligent tester.
- If the Three-Way Catalytic Converter (TWC) has deteriorated, the HO2 sensor (located behind the TWC) voltage output fluctuates up and down frequently, even under normal driving conditions (active air-fuel ratio control is not performed).

Voltage output when active air-fuel ratio control not performed:

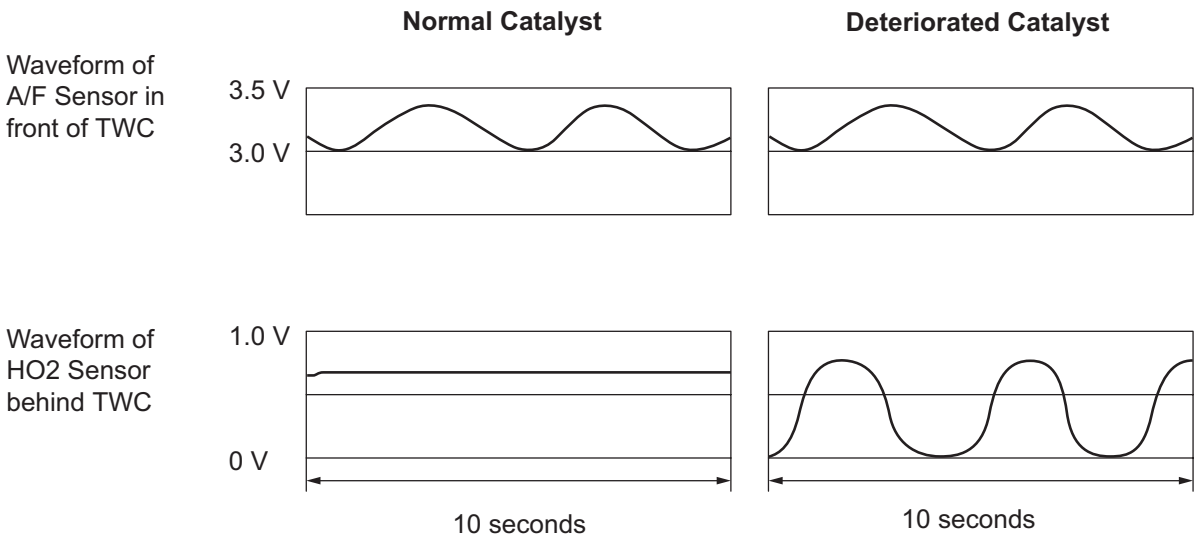

Y A121610E02

INSPECTION PROCEDURE

HINT:
Read freeze frame data using an intelligent tester. Freeze frame data record the engine condition when malfunctions are detected. When troubleshooting, freeze frame data can help determine if the vehicle was moving or stationary, if the engine was warmed up or not, if the air-fuel ratio was lean or rich, and other data, from the time the malfunction occurred.

1	CHECK ANY OTHER DTCS OUTPUT (IN ADDITION TO DTC P0420)

(a) Connect an intelligent tester to the DLC3.
(b) Turn the ignition switch to ON and turn the tester ON.
(c) Select the following menu items: DIAGNOSIS / ENHANCED OBD II / DTC INFO / CURRENT CODES.
(d) Read DTCs.

Result

Display (DTC Output)	Proceed To
P0420	A

Display (DTC Output)	Proceed To
P0420 and other DTCs	B

HINT:
If any DTCs other than P0420 are output, troubleshoot those DTCs first.

B → **GO TO DTC CHART**

A

2 PERFORM ACTIVE TEST USING INTELLIGENT TESTER (A/F CONTROL)

ES

(a) Connect the intelligent tester to the DLC3.
(b) Start the engine and turn the tester ON.
(c) Warm up the engine at an engine speed of 2,500 rpm for approximately 90 seconds.
(d) On the tester, select the following menu items: DIAGNOSIS / ENHANCED OBD II / ACTIVE TEST / A/F CONTROL.
(e) Perform the A/F CONTROL operation with the engine in an idling condition (press the RIGHT or LEFT button to change the fuel injection volume).
(f) Monitor the voltage outputs of the A/F and HO2 sensors (AFS B1 S1 and O2S B1 S2) displayed on the tester.
Result:
A/F sensor reacts in accordance with increases and decreases in fuel injection volume:
+25 % = Rich output:
Less than 3.0 V
-12.5 % = Lean output:
More than 3.35 V

NOTICE:
The A/F sensor has an output delay of a few seconds and the HO2 sensor has a maximum output delay of approximately 20 seconds.

Case	A/F Sensor (Sensor 1) Output Voltage		HO2 Sensor (Sensor 2) Output Voltage		Main Suspected Trouble Areas
1	Injection Volume +25 % -12.5 %		Injection Volume +25 % -12.5 %		• Catalyst • Exhaust gas leakage
	Output Voltage More than 3.35 V Less than 3.0 V	OK	Output Voltage More than 0.5 V Less than 0.4 V	OK	
2	Injection Volume +25 % -12.5 %		Injection Volume +25 % -12.5 %		• A/F sensor • A/F sensor heater • A/F sensor circuit
	Output Voltage Almost no reaction	NG	Output Voltage More than 0.5 V Less than 0.4 V	OK	

Case	A/F Sensor (Sensor 1) Output Voltage		HO2 Sensor (Sensor 2) Output Voltage		Main Suspected Trouble Areas
3	Injection Volume +25 % -12.5 %		Injection Volume +25 % -12.5 %		• HO2 sensor • HO2 sensor heater • HO2 sensor circuit
	Output Voltage More than 3.35 V Less than 3.0 V	OK	Output Voltage Almost no reaction	NG	
4	Injection volume +25 % -12.5 %		Injection Volume +25 % -12.5 %		Extremely rich or lean actual air-fuel ratio • Injector • Fuel pressure • Gas leakage from exhaust system
	Output Voltage Almost no reaction	NG	Output Voltage Almost no reaction	NG	

ES

Following the A/F CONTROL procedure enables technicians to check and graph the voltage outputs of both the A/F and HO2 sensors.
To display the graph, select the following menu items on the tester: DIAGNOSIS / ENHANCED OBD II / ACTIVE TEST / A/F CONTROL / USER DATA / AFS B1 S1 and O2S B1 S2, and press the YES button and then the ENTER button followed by the F4 button.

Result

Result	Proceed To
Case 1	A
Case 2	B
Case 3	C
Case 4	D

B → **REPLACE AIR FUEL RATIO SENSOR**

C → **Go to step 4**

D → **CHECK AND REPLACE EXTREMELY RICH OR LEAN ACTUAL AIR-FUEL RATIO, AND GO TO STEP 3**

A

3 CHECK FOR EXHAUST GAS LEAKAGE

OK:
No gas leakage.

NG → **REPAIR OR REPLACE EXHAUST GAS LEAKAGE POINT**

OK

REPLACE THREE-WAY CATALYTIC CONVERTER (BOTH FRONT AND REAR CATALYSTS (FRONT EXHAUST PIPE))

4	CHECK FOR EXHAUST GAS LEAKAGE

OK:
No gas leakage.

NG → **REPAIR OR REPLACE EXHAUST GAS LEAKAGE POINT**

OK

REPLACE HEATED OXYGEN SENSOR

DTC	P043E	Evaporative Emission System Reference Orifice Clog Up

DTC	P043F	Evaporative Emission System Reference Orifice High Flow

DTC SUMMARY

DTCs	Monitoring Items	Malfunction Detection Conditions	Trouble Areas	Detection Timings	Detection Logic
P043E	Reference orifice clogged	P043E, P043F, P2401, P2402 and P2419 present when one of following conditions met during key-off EVAP monitor: • EVAP pressure just after reference pressure measurement greater than -1 kPa-g (-7.5 mmHg-g) • Reference pressure less than -4.85 kPa-g (-36.4 mmHg-g) • Reference pressure greater than -1.057 kPa-g (-7.93 mmHg-g) • Reference pressure not saturated • Reference pressure difference between first and second 0.7 kPa-g (5.25 mmHg-g) or more HINT: Typical example values	• Canister pump module (Reference orifice, leak detection pump, vent valve) • Connector/wire harness (Canister pump module - ECM) • EVAP system hose (pipe from air inlet port to canister pump module, canister filter, fuel tank vent hose) • ECM	While ignition switch OFF	2 trip
P043F	Reference orifice high-flow		• Canister pump module (Reference orifice, leak detection pump, vent valve) • Connector/wire harness (Canister pump module - ECM) • EVAP system hose (pipe from air inlet port to canister pump module, canister filter, fuel tank vent hose) • ECM	While ignition switch OFF	2 trip

HINT:
The reference orifice is located inside the canister pump module.

DESCRIPTION

The description can be found in the EVAP (Evaporative Emission) System (See page ES-319).

INSPECTION PROCEDURE

Refer to the EVAP System (See page ES-324).

MONITOR DESCRIPTION

5 hours* after the ignition switch is turned to OFF, the leak detection pump creates negative pressure (vacuum) in the EVAP system. The ECM monitors for leaks and actuator malfunctions based on the EVAP pressure.
HINT:
*: If the engine coolant temperature is not below 35°C (95°F) 5 hours after the ignition switch is turned to OFF, the monitor check starts 2 hours later. If it is still not below 35°C (95°F) 7 hours after the ignition switch is turned to OFF, the monitor check starts 2.5 hours later.

Sequence	Operations	Descriptions	Duration
-	ECM activation	Activated by soak timer, 5 hours (7 or 9.5 hours) after ignition switch turned to OFF.	-

Sequence	Operations	Descriptions	Duration
A	Atmospheric pressure measurement	Vent valve turned OFF (vent) and EVAP system pressure measured by ECM in order to register atmospheric pressure. If pressure in EVAP system not between 76 kPa-a and 110 kPa-a (570 mmHg-a and 825 mmHg-a), ECM cancels EVAP system monitor.	10 seconds
B	First reference pressure measurement	In order to determine reference pressure, leak detection pump creates negative pressure (vacuum) through reference orifice and then ECM checks if leak detection pump and vent valve operate normally.	60 seconds
C	EVAP system pressure measurement	Vent valve turned ON (closed) to shut EVAP system. Negative pressure (vacuum) created in EVAP system, and EVAP system pressure then measured. Write down measured value as will be used in leak check. If EVAP pressure does not stabilize within 15 minutes, ECM cancels EVAP system monitor.	15 minutes*
D	Purge VSV monitor	Purge VSV opened and then EVAP system pressure measured by ECM. Large increase indicates normality.	10 seconds
E	Second reference pressure measurement	After second reference pressure measurement, leak check performed by comparing first and second reference pressure. If stabilized system pressure higher than second reference pressure, ECM determines that EVAP system leaking.	60 seconds
F	Final check	Atmospheric pressure measured and then monitoring result recorded by ECM.	-

* If only a small amount of fuel is in the fuel tank, it takes longer for the EVAP pressure to stabilize.

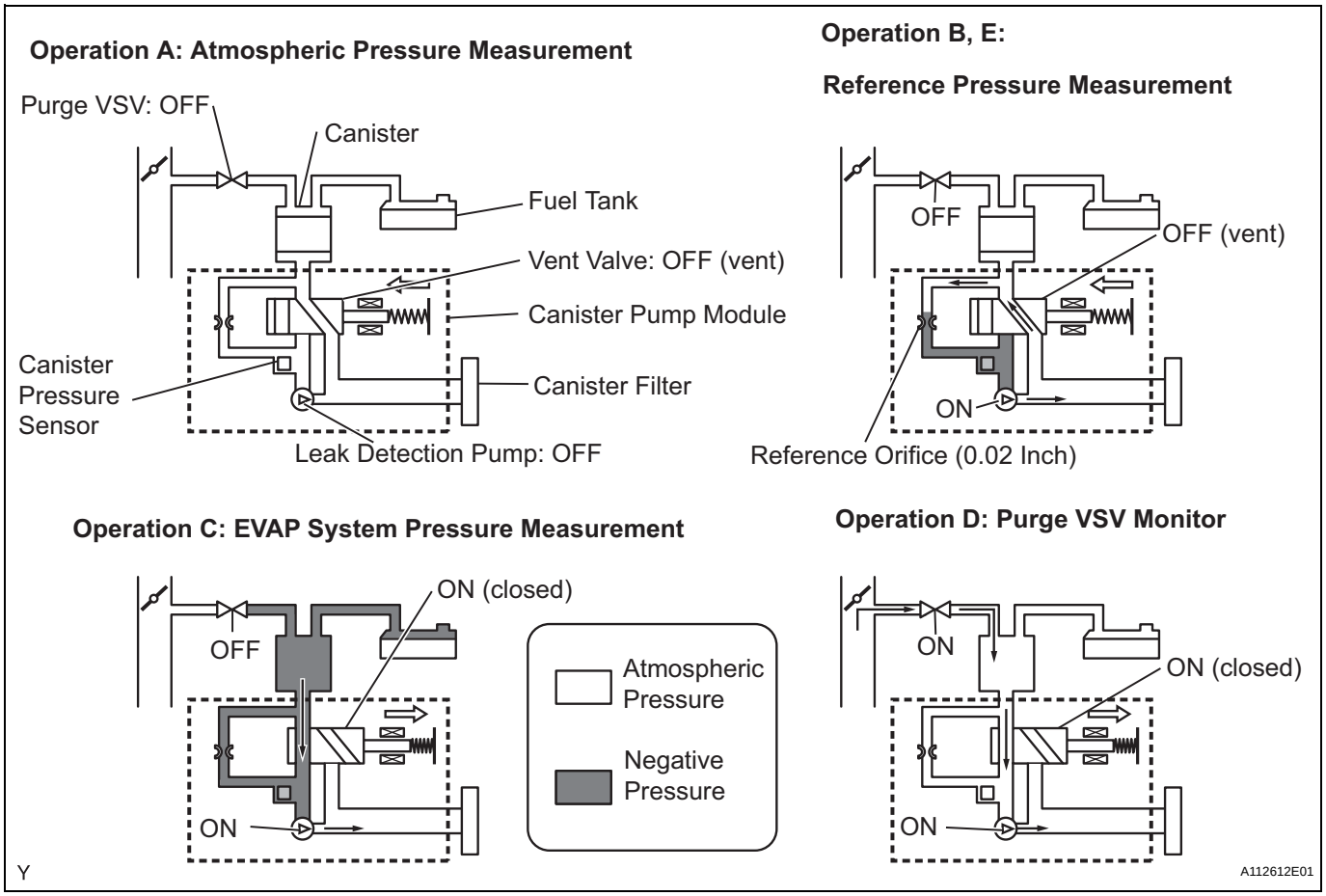

(a) P043E: Reference orifice clogged

In operation B, the leak detection pump creates negative pressure (vacuum) through the reference orifice. The EVAP system pressure is then measured by the ECM, using the canister pressure sensor, to determine the reference pressure. If the pressure is lower than -4.85 kPa-g (-36.4 mmHg-g), the ECM interprets this as a clog malfunction in the reference orifice, and stops the EVAP system monitor.
The ECM then illuminates the MIL and sets the DTC (2 trip detection logic).

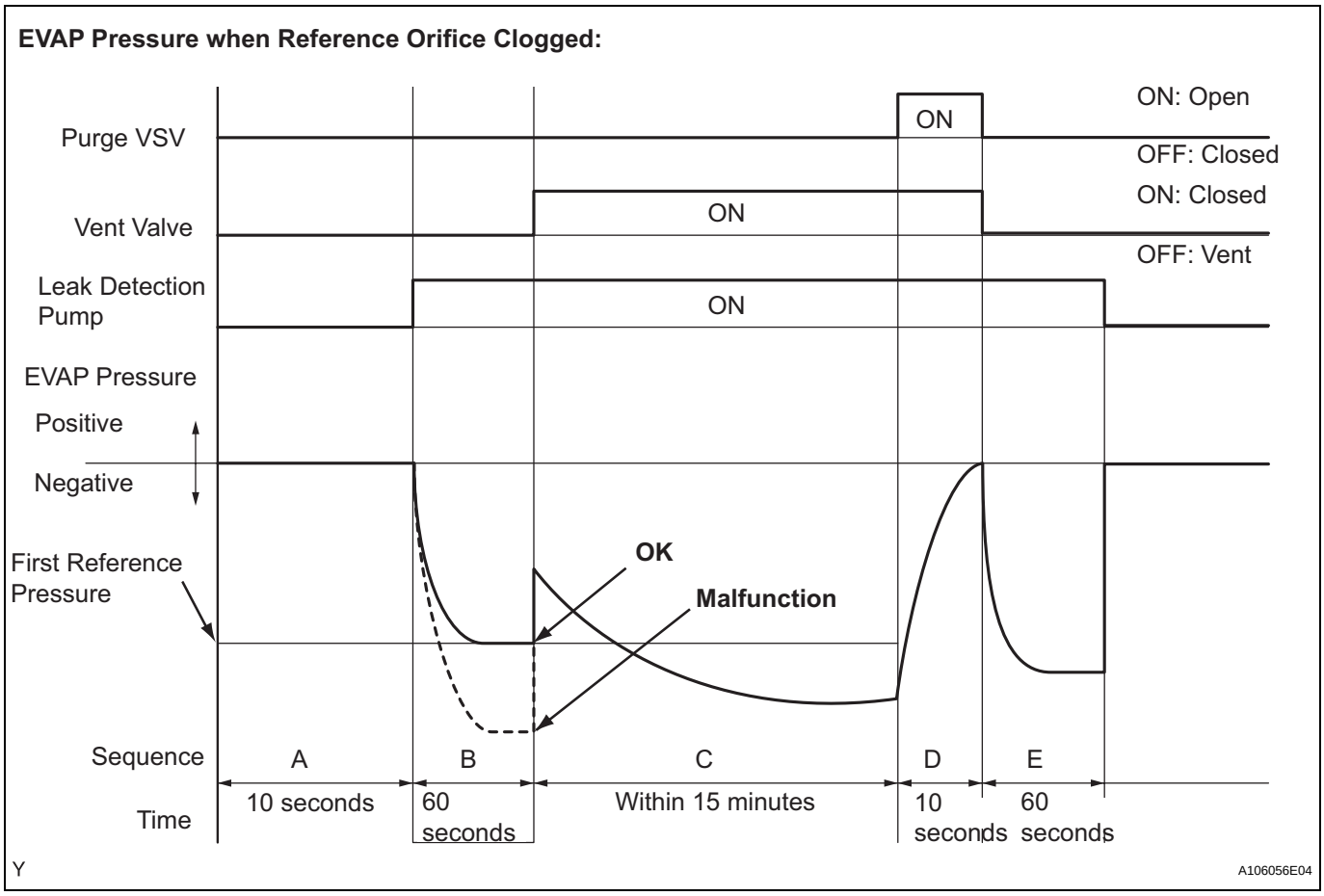

(b) P043F: Reference orifice high-flow

In operation B, the leak detection pump creates negative pressure (vacuum) through the reference orifice. The EVAP system pressure is then measured by the ECM using the canister pressure sensor to determine the reference pressure. If the pressure is higher than -1.057 kPa-g (-7.93 mmHg-g), the ECM interprets this as a high-flow malfunction in the reference orifice, and stops the EVAP system monitor. The ECM then illuminates the MIL and sets the DTC (2 trip detection logic).

EVAP Pressure when Reference Orifice High-flow Malfunction:

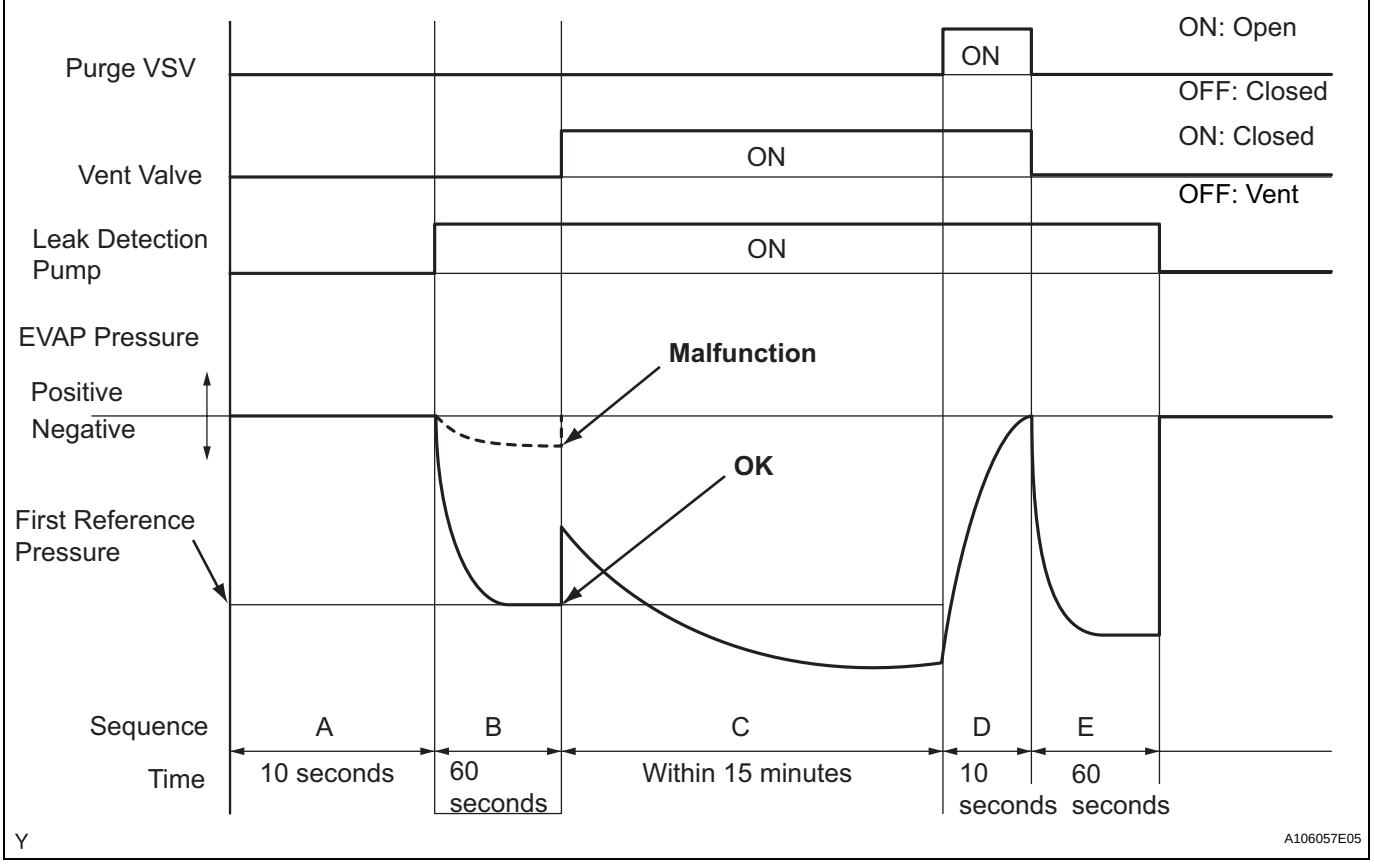

MONITOR STRATEGY

Required Sensors/Components	Canister pump module
Frequency of Operation	Once per driving cycle
Duration	Within 2 minutes
MIL Operation	2 driving cycles
Sequence of Operation	None

TYPICAL ENABLING CONDITIONS

Monitor runs whenever following DTCs not present	None
EVAP key-off monitor runs when all of following conditions met	-
Atmospheric pressure	76 to 110 kPa-a (570 to 825 mmHg-a)
Battery voltage	10.5 V or more
Vehicle speed	Below 2.5 mph (4 km/h)
Ignition switch	OFF
Time after key off	5 or 7 or 9.5 hours
Canister pressure sensor malfunction (P0450, P0451, P0452 and P0453)	Not detected
Purge VSV	Not operated by scan tool
Vent valve	Not operated by scan tool
Leak detection pump	Not operated by scan tool
Both of following conditions met before key off	Conditions 1 and 2
1. Duration that vehicle driven	5 minutes or more
2. EVAP purge operation	Performed

ES

ECT	4.4° to 35°C (40° to 95°F)
IAT	4.4°to 35°C (40° to 95°F)

1. Key-off monitor sequence 1 to 8

1. Atmospheric pressure measurement

Next sequence run if following condition set	-
Atmospheric pressure change	Less than 0.3 kPa-g (2.25 mmHg-g) in 1 second

2. First reference pressure measurement

Next sequence run if all of following conditions set	Condition 1, 2 and 3
1. EVAP pressure just after reference pressure measurement start	-1 kPa-g (-7.5 mmHg-g) or less
2. Reference pressure	-4.85 to -1.057 kPa-g (-36.4 to -7.93 mmHg-g)
3. Reference pressure	Saturated within 60 seconds

3. Vent valve stuck closed check

Next sequence run if following condition set	-
EVAP pressure change after vent valve ON (closed)	0.3 kPa-g (2.25 mmHg-g) or more

4. Vacuum introduction

Next sequence run if following condition set	-
EVAP pressure	Saturated within 15 minutes

5. Purge VSV stuck closed check

Next sequence run if following condition set	-
EVAP pressure change after purge VSV ON (open)	0.3 kPa-g (2.25 mmHg-g) or more

6. Second reference pressure measurement

Next sequence run if all of following conditions set	Condition 1, 2, 3 and 4
1. EVAP pressure just after reference pressure	-1 kPa-g (-7.5 mmHg-g) or less
2. Reference pressure	-4.85 to -1.057 kPa-g (-36.4 to -7.93 mmHg-g)
3. Reference pressure	Saturated within 60 seconds
4. Reference pressure difference between first and second	Less than 0.7 kPa-g (5.25 mmHg-g)

7. Leak check

Next sequence run if following condition set	-
EVAP pressure when vacuum introduction complete	Second reference pressure or less

8. Atmospheric pressure measurement

EVAP monitor complete if following condition set	-
Atmospheric pressure difference between sequence 1 and 8	Within 0.3 kPa-g (2.25 mmHg-g)

TYPICAL MALFUNCTION THRESHOLDS

"Saturated" indicates that the EVAP pressure change is less than 0.286 kPa-g (2.14 mmHg-g) in 60 seconds.

One of following conditions met	-
EVAP pressure just after reference pressure measurement start	More than -1 kPa-g (-7.5 mmHg-g)
Reference pressure	Less than -4.85 kPa-g (-36.4 mmHg-g)
Reference pressure	-1.057 kPa-g (-7.93 mmHg-g) or more
Reference pressure	Not saturated within 60 seconds
Reference pressure difference between first and second	0.7 kPa-g (5.25 mmHg-g) or more

MONITOR RESULT

Refer to CHECKING MONITOR STATUS (See page ES-17).

DTC	P0441	Evaporative Emission Control System Incorrect Purge Flow

DTC SUMMARY

DTC	Monitoring Items	Malfunction Detection Conditions	Trouble Areas	Detection Timings	Detection Logic
P0441	Purge VSV (Vacuum Switching Valve) stuck open	Leak detection pump creates negative pressure (vacuum) in EVAP system and EVAP system pressure measured. Reference pressure measured at start and at end of leak check. If stabilized pressure higher than [second reference pressure x 0.2], ECM determines that purge VSV stuck open	• Purge VSV • Connector/wire harness (Purge VSV - ECM) • ECM • Canister pump module • Leakage from EVAP system	While ignition switch OFF	2 trip
	Purge VSV stuck closed	After EVAP leak check performed, purge VSV turned ON (open), and atmospheric air introduced into EVAP system. Reference pressure measured at start and at end of check. If pressure does not return to near atmospheric pressure, ECM determines that purge VSV stuck closed	• Purge VSV • Connector/wire harness (Purge VSV - ECM) • ECM • Canister pump module • Leakage from EVAP system	While ignition switch OFF	2 trip
	Purge flow	While engine running, following conditions successively met: • Negative pressure not created in EVAP system when purge VSV turned ON (open) • EVAP system pressure change less than 0.5 kPa-g (3.75 mmHg-g) when vent valve turned ON (closed) • Atmospheric pressure change before and after purge flow monitor less than 0.1 kPa-g (0.75 mmHg-g)	• Purge VSV • Connector/wire harness (Purge VSV - ECM) • Leakage from EVAP line (Purge VSV - Intake manifold) • ECM	While engine running	2 trip

ES

DESCRIPTION

The description can be found in the EVAP (Evaporative Emission) System (See page ES-319).

INSPECTION PROCEDURE

Refer to the EVAP System (See page ES-324).

MONITOR DESCRIPTION

The two monitors, Key-Off and Purge Flow, are used to detect malfunctions relating to DTC P0441. The Key-Off monitor is initiated by the ECM internal timer, known as the soak timer, 5 hours* after the ignition switch is turned to OFF. The purge flow monitor runs while the engine is running.

1. KEY-OFF MONITOR

   5 hours* after the ignition switch is turned to OFF, the leak detection pump creates negative pressure (vacuum) in the EVAP system. The ECM monitors for leaks and actuator malfunctions based on the EVAP pressure.

   HINT:

   *: If the engine coolant temperature is not below 35°C (95°F) 5 hours after the ignition switch is turned to OFF, the monitor check starts 2 hours later. If it is still not below 35°C (95°F) 7 hours after the ignition switch is turned to OFF, the monitor check starts 2.5 hours later.

Sequence	Operations	Descriptions	Duration
-	ECM activation	Activated by soak timer, 5 hours (7 or 9.5 hours) after ignition switch turned to OFF.	-

Sequence	Operations	Descriptions	Duration
A	Atmospheric pressure measurement	Vent valve turned OFF (vent) and EVAP system pressure measured by ECM in order to register atmospheric pressure. If pressure in EVAP system not between 76 kPa-a and 110 kPa-a (570 mmHg-a and 825 mmHg-a), ECM cancels EVAP system monitor.	10 seconds
B	First reference pressure measurement	In order to determine reference pressure, leak detection pump creates negative pressure (vacuum) through reference orifice and then ECM checks if leak detection pump and vent valve operate normally.	60 seconds
C	EVAP system pressure measurement	Vent valve turned ON (closed) to shut EVAP system. Negative pressure (vacuum) created in EVAP system, and EVAP system pressure then measured. Write down measured value as will be used in leak check. If EVAP pressure does not stabilize within 15 minutes, ECM cancels EVAP system monitor.	15 minutes*
D	Purge VSV monitor	Purge VSV opened and then EVAP system pressure measured by ECM. Large increase indicates normality.	10 seconds
E	Second reference pressure measurement	After second reference pressure measurement, leak check performed by comparing first and second reference pressure. If stabilized system pressure higher than second reference pressure, ECM determines that EVAP system leaking.	60 seconds
F	Final check	Atmospheric pressure measured and then monitoring result recorded by ECM.	-

* If only a small amount of fuel is in the fuel tank, it takes longer for the EVAP pressure to stabilize.

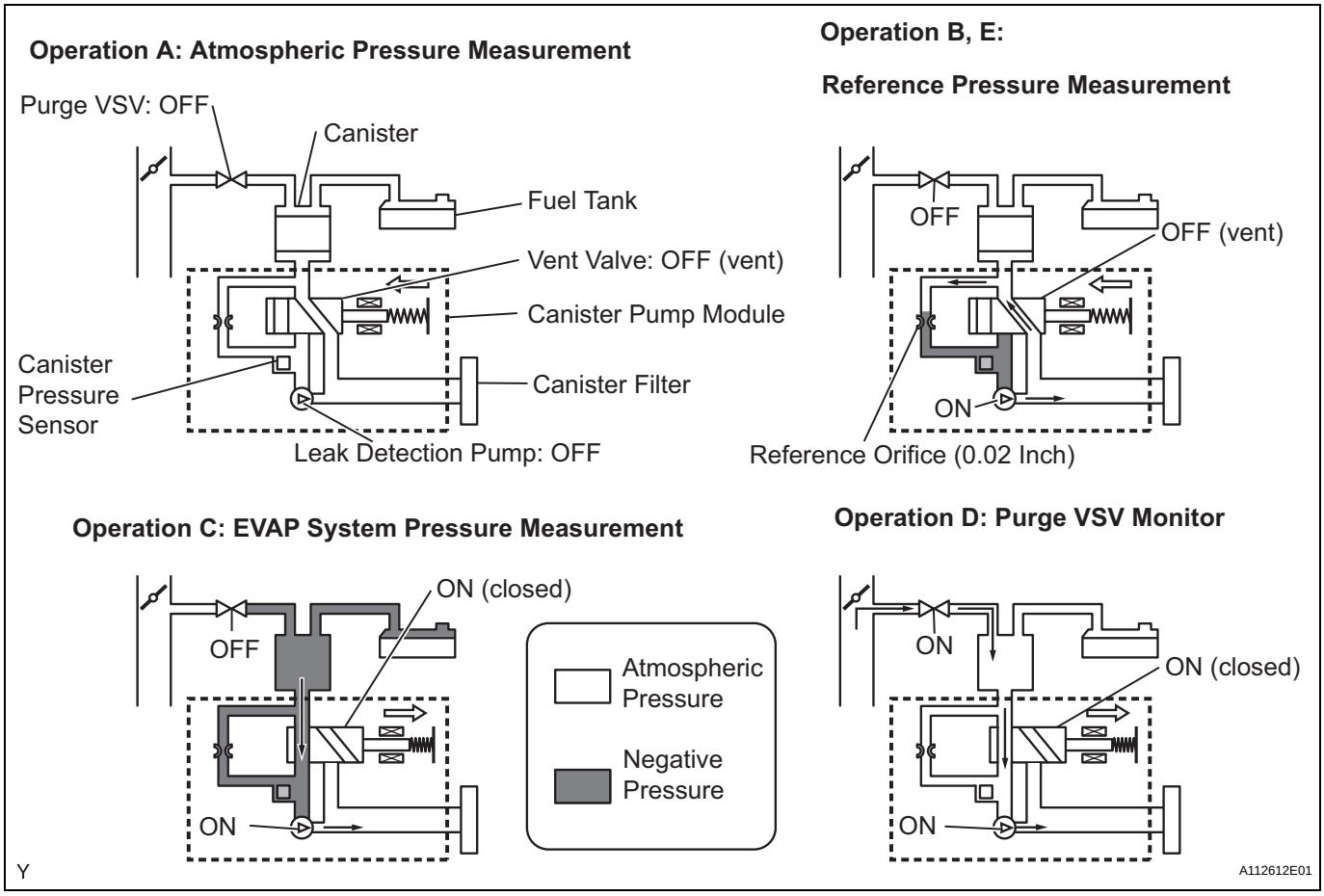

(a) Purge VSV stuck open

In operation C, the leak detection pump creates negative pressure (vacuum) in the EVAP system. The EVAP system pressure is then measured by the ECM using the canister pressure sensor. If the stabilized system pressure is higher than [second reference pressure x 0.2], the ECM interprets this as the purge VSV (Vacuum Switching Valve) being stuck open. The ECM illuminates the MIL and sets the DTC (2 trip detection logic).

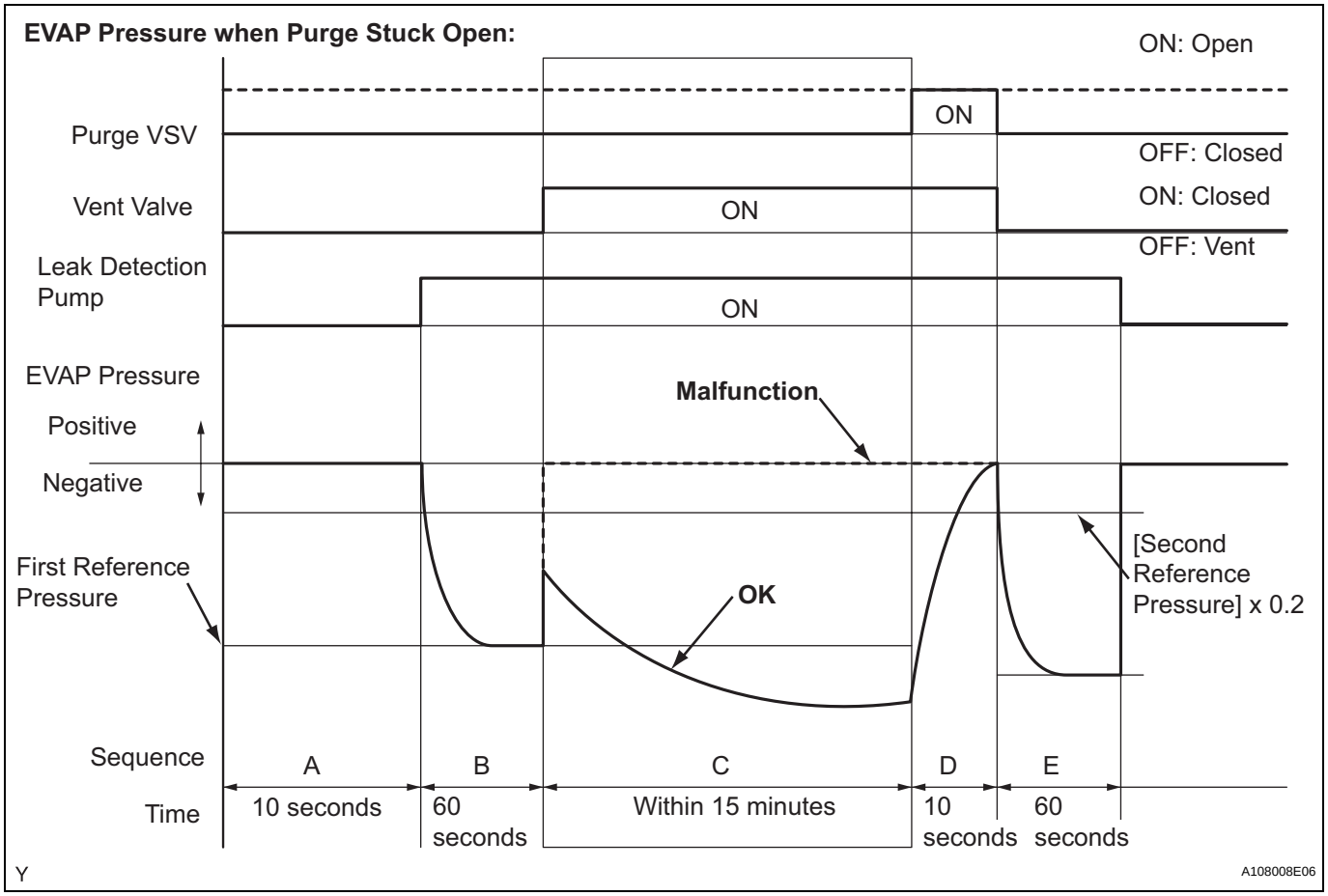

ES

(b) Purge VSV stuck closed

In operation D, the canister pressure sensor measures the EVAP system pressure. The pressure measurement for purge VSV monitor is begun when the purge VSV is turned ON (open) after the EVAP leak check. When the measured pressure indicates an increase of 0.3 kPa-g (2.25 mmHg-g) or more, the purge VSV is functioning normally. If the pressure does not increase, the ECM interprets this as the purge VSV being stuck closed. The ECM illuminates the MIL and sets the DTC (2 trip detection logic).

EVAP Pressure when Purge VSV Stuck Closed:

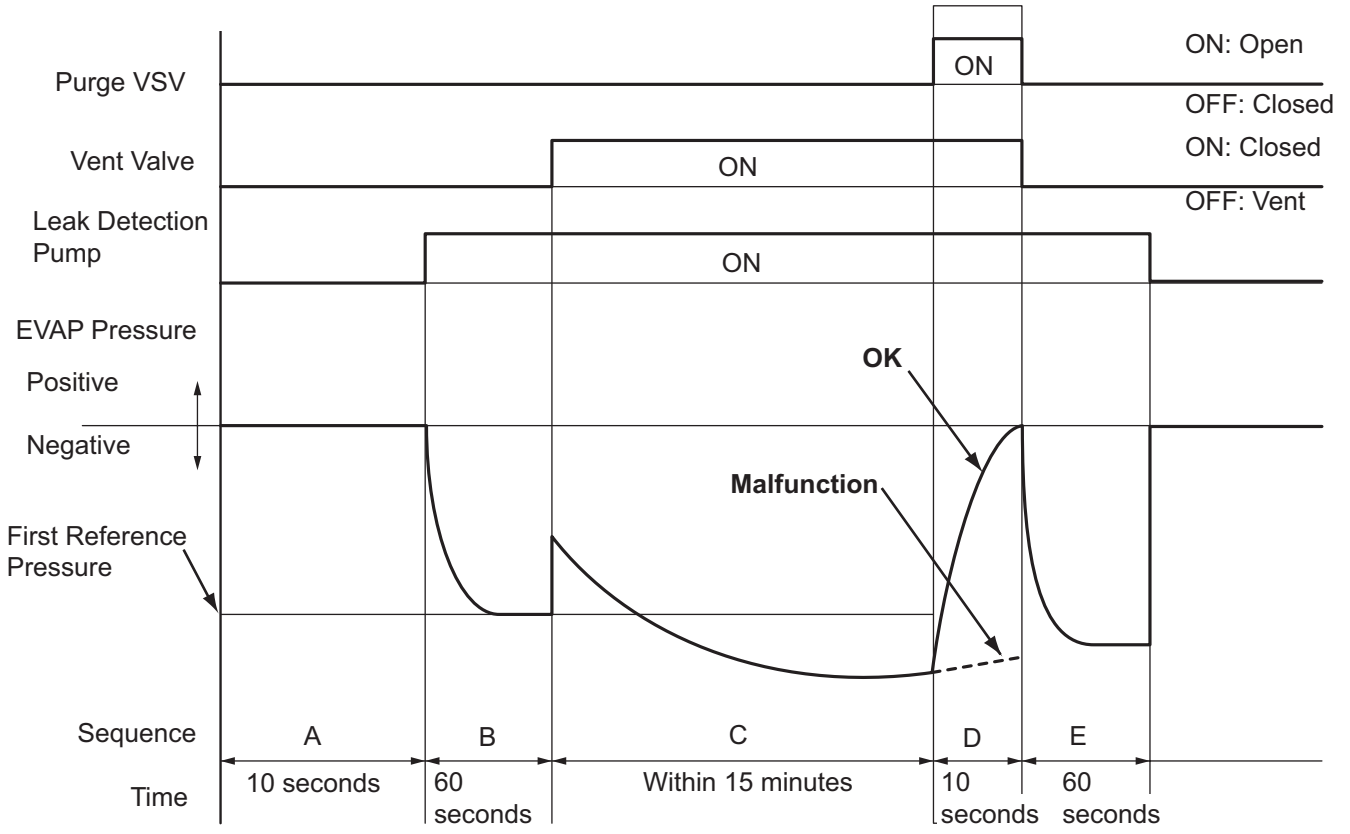

Y A106059E06

2. PURGE FLOW MONITOR

EVAP Pressure During Purge Flow Monitor:

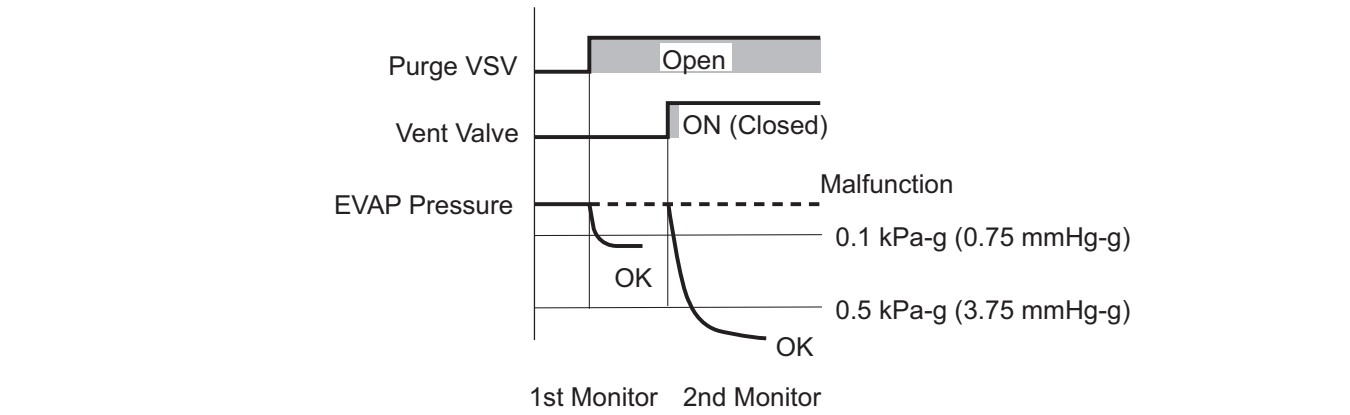

Y A112640E01

The purge flow monitor consists of the two step monitors. The 1st monitor is conducted every time and the 2nd monitor is activated if necessary.

- The 1st monitor
  While the engine is running and the purge VSV is ON (open), the ECM monitors the purge flow by measuring the EVAP pressure change. If negative pressure is not created, the ECM begins the 2nd monitor.
- The 2nd monitor
  The vent valve is turned ON (closed) and the EVAP pressure is then measured. If the variation in the pressure is less than 0.5 kPa-g (3.75 mmHg-g), the ECM interprets this as the purge VSV being stuck closed, and illuminates the MIL and sets DTC P0441 (2 trip detection logic).

Atmospheric pressure check:
In order to ensure reliable malfunction detection, the variation between the atmospheric pressures, before and after conduction of the purge flow monitor, is measured by the ECM.

OBD II MONITOR SPECIFICATIONS

1. Key-off Monitor

Monitor Strategy

Required Sensors/Components	Purge VSV and canister pump module
Frequency of Operation	Once per driving cycle
Duration	Within 15 minutes (varies with fuel in tank)
MIL Operation	2 driving cycles
Sequence of Operation	None

Typical Enabling Conditions

EVAP key-off monitor runs when all of following conditions met	-
Atmospheric pressure	76 to 110 kPa-a (570 to 825 mmHg-a)
Battery voltage	10.5 V or more
Vehicle speed	Below 2.5 mph (4 km/h)
Ignition switch	OFF
Time after key off	5 or 7 or 9.5 hours
Canister pressure sensor malfunction (P0450, P0451, P0452 and P0453)	Not detected
Purge VSV	Not operated by scan tool
Vent valve	Not operated by scan tool
Leak detection pump	Not operated by scan tool
Both of following conditions met before key off	Conditions 1 and 2
1. Duration that vehicle driven	5 minutes or more
2. EVAP purge operation	Performed
ECT	4.4° to 35°C (40° to 95°F)
IAT	4.4°to 35°C (40° to 95°F)

2. Key-off monitor sequence 1 to 8

1. Atmospheric pressure measurement

Next sequence run if following condition set	-
Atmospheric pressure change	Less than 0.3 kPa-g (2.25 mmHg-g) in 1 second

2. First reference pressure measurement

Next sequence run if all of following conditions set	Condition 1, 2 and 3
1. EVAP pressure just after reference pressure measurement start	-1 kPa-g (-7.5 mmHg-g) or less
2. Reference pressure	-4.85 to -1.057 kPa-g (-36.4 to -7.93 mmHg-g)
3. Reference pressure	Saturated within 60 seconds

3. Vent valve stuck closed check

Next sequence run if following condition set	-
EVAP pressure change after vent valve ON (closed)	0.3 kPa-g (2.25 mmHg-g) or more

4. Vacuum introduction

Next sequence run if following condition set	-
EVAP pressure	Saturated within 15 minutes

5. Purge VSV stuck closed check

Next sequence run if following condition set	-
EVAP pressure change after purge VSV ON (open)	0.3 kPa-g (2.25 mmHg-g) or more

6. Second reference pressure measurement

Next sequence run if all of following conditions set	Condition 1, 2, 3 and 4
1. EVAP pressure just after reference pressure	-1 kPa-g (-7.5 mmHg-g) or less
2. Reference pressure	-4.85 to -1.057 kPa-g (-36.4 to -7.93 mmHg-g)
3. Reference pressure	Saturated within 60 seconds
4. Reference pressure difference between first and second	Less than 0.7 kPa-g (5.25 mmHg-g)

7. Leak check

Next sequence run if following condition set	-
EVAP pressure when vacuum introduction complete	Second reference pressure or less

8. Atmospheric pressure measurement

EVAP monitor complete if following condition set	-
Atmospheric pressure difference between sequence 1 and 8	Within 0.3 kPa-g (2.25 mmHg-g)

Typical Malfunction Thresholds

Purge VSV stuck open:	-
EVAP pressure when vacuum introduction complete	Higher than reference pressure x 0.2

Purge VSV stuck closed:	-
EVAP pressure change after purge VSV ON (open)	Less than 0.3 kPa-g (2.25 mmHg-g)

OBD II MONITOR SPECIFICATIONS

1. Purge Flow Monitor

Monitor Strategy

Required Sensors/Components	Purge VSV and canister pump module
Frequency of Operation	Once per driving cycle
Duration	Within 30 seconds
MIL Operation	2 driving cycles
Sequence of Operation	None

Typical Enabling Conditions

Monitor runs whenever following DTCs not present	P0011 (VVT System 1 - Advance) P0012 (VVT System 1 - Retard) P0100 - P0103 (MAF meter) P0110 - P0113 (IAT sensor) P0115 - P0118 (ECT sensor) P0120 - P0223, P2135 (TP sensor) P0125 (Insufficient ECT for Closed Loop) P0171, P0172 (Fuel system) P0300 - P0304 (Misfire) P0335 (CKP sensor) P0340 (CMP sensor) P0351 - P0354 (Igniter) P0450 - P0453 (EVAP press sensor) P0500 (VSS)
Engine	Running
ECT	4.4°C (40°F) or more
IAT	4.4°C (40°F) or more

Canister pressure sensor malfunction	Not detected
Purge VSV	Not operated by scan tool
EVAP system check	Not operated by scan tool
Battery voltage	10 V or more
Purge duty cycle	8 % or more

Typical Malfunction Thresholds

Both of following conditions met	Conditions 1 and 2
1. EVAP pressure change when purge operation started	Less than 0.1 kPa-g (0.75 mmHg-g)
2. EVAP pressure change during purge operation when vent valve closed	Less than 0.5 kPa-g (3.75 mmHg-g)

MONITOR RESULT

Refer to CHECKING MONITOR STATUS (See page ES-17).

DTC	P0450	Evaporative Emission Control System Pressure Sensor / Switch

DTC	P0451	Evaporative Emission Control System Pressure Sensor Range / Performance

DTC	P0452	Evaporative Emission Control System Pressure Sensor / Switch Low Input

DTC	P0453	Evaporative Emission Control System Pressure Sensor / Switch High Input

DTC SUMMARY

DTC	Monitoring Items	Malfunction Detection Conditions	Trouble Areas	Detection Timings	Detection Logic
P0450	Canister pressure sensor voltage fluctuation abnormal	Sensor output voltage rapidly fluctuates beyond upper and lower malfunction thresholds for 0.5 seconds.	• Canister pump module • EVAP system hose (pipe from air inlet port to canister pump module, canister filter, fuel tank vent hose) • ECM	• EVAP monitoring (ignition OFF) • Ignition ON	1 trip
P0451	Canister pressure sensor noise	Sensor output voltage fluctuates frequently within certain time period.	• Canister pump module • Connector/wire harness (Canister pump module - ECM) • EVAP system hose (pipe from air inlet port to canister pump module, canister filter, fuel tank vent hose) • ECM	• EVAP monitoring (ignition OFF) • Engine running	2 trip
	Canister pressure sensor signal becomes fixed/flat	Sensor output voltage does not vary within certain time period.	• Canister pump module • Connector/wire harness (Canister pump module - ECM) • EVAP system hose (pipe from air inlet port to canister pump module, canister filter, fuel tank vent hose) • ECM	• EVAP monitoring (ignition OFF)	2 trip
P0452	Canister pressure sensor voltage low	Sensor output voltage less than 0.45 V for 0.5 seconds.	• Canister pump module • Connector/wire harness (Canister pump module - ECM) • EVAP system hose (pipe from air inlet port to canister pump module, canister filter, fuel tank vent hose) • ECM	• Ignition ON • EVAP monitoring (ignition OFF)	1 trip

DTC	Monitoring Items	Malfunction Detection Conditions	Trouble Areas	Detection Timings	Detection Logic
P0453	Canister pressure sensor voltage high	Sensor output voltage more than 4.9 V for 0.5 seconds.	• Canister pump module • Connector/wire harness (Canister pump module - ECM) • EVAP system hose (pipe from air inlet port to canister pump module, canister filter, fuel tank vent hose) • ECM	• Ignition ON • EVAP monitoring (ignition OFF)	1 trip

HINT:
The canister pressure sensor is built into the canister pump module.

ES

DESCRIPTION

The description can be found in the EVAP (Evaporative Emission) System (See page ES-319).

MONITOR DESCRIPTION

Canister Pressure Sensor Specification:

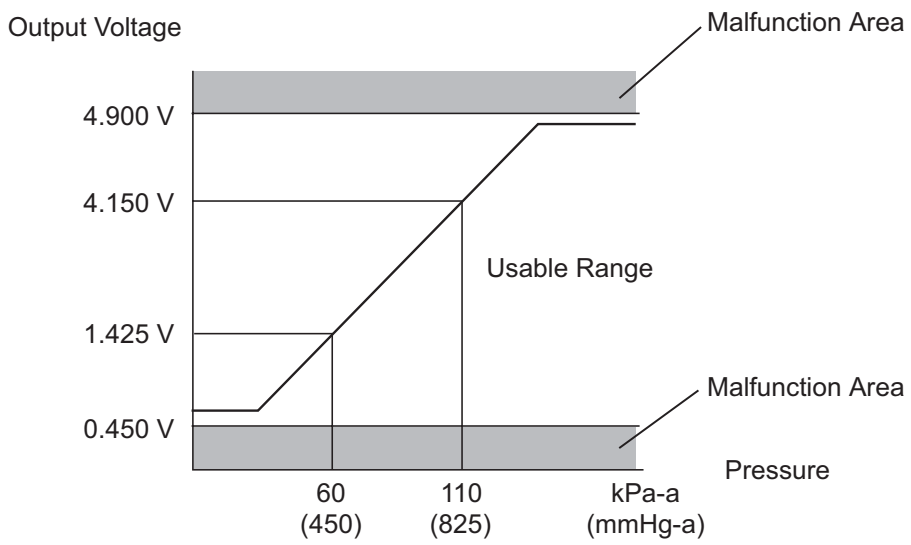

HINT:

Standard atmospheric pressure is 101.3 kPa-a (760 mmHg-a)

A115543E05

1. DTC P0450: Canister pressure sensor voltage abnormal fluctuation
   If the canister pressure sensor voltage output [pressure] rapidly fluctuates between less than 0.45 V [42.1 kPa-a (315.9 mmHg-a)] and more than 4.9 V [123.8 kPa-a (928.4 mmHg-a)], the ECM interprets this as an open or short circuit malfunction in the canister pressure sensor or its circuit, and stops the EVAP (Evaporative Emission) system monitor. The ECM then illuminates the MIL and sets the DTC (1 trip detection logic).

2. DTC P0451: Canister pressure sensor noise or fixed/flat
   If the canister pressure sensor voltage output fluctuates rapidly for 10 seconds, the ECM stops the EVAP system monitor. The ECM interprets this as noise from the canister pressure sensor, and stops the EVAP system monitor. The ECM then illuminates the MIL and sets the DTC.
   Alternatively, if the sensor voltage output does not change for 10 seconds, the ECM interprets this as the sensor being fixed/flat, and stops the monitor. The ECM then illuminates the MIL and sets the DTC. (Both the malfunctions are detected by 2 trip detection logic).
3. DTC P0452: Canister pressure sensor voltage low
   If the canister pressure sensor voltage output [pressure] is below 0.45 V [42.1 kPa-a (315.9 mmHg-a)], the ECM interprets this as an open or short circuit malfunction in the canister pressure sensor or its circuit, and stops the EVAP system monitor. The ECM then illuminates the MIL and sets the DTC (1 trip detection logic).
4. DTC P0453: Canister pressure sensor voltage high
   If the canister pressure sensor voltage output [pressure] is 4.9 V [123.8 kPa-a (928.4 mmHg-a)] or more, the ECM interprets this as an open or short circuit malfunction in the canister pressure sensor or its circuit, and stops the EVAP system monitor. The ECM then illuminates the MIL and sets the DTC (1 trip detection logic).

MONITOR STRATEGY

Required Sensors/Components	Canister pump module
Frequency of Operation	Once per driving cycle: P0451 sensor fixed/flat Continuous: P0451 sensor noise, P0450, P0452 and P0453
Duration	0.5 seconds: P0450, P0452 and P0453 10 seconds: P0451
MIL Operation	Immediate: P0450, P0452 and P0453 2 driving cycles: P0451
Sequence of Operation	None

TYPICAL ENABLING CONDITIONS

P0451 (Noise monitor):

Monitor runs whenever following DTCs not present	None
Atmospheric pressure (absolute pressure)	76 to 110 kPa-a (570 to 825 mmHg-a)
Battery voltage	10.5 V or more
Intake air temperature	4.4°to 35°C (40° to 95°F)
Canister pressure sensor malfunction (P0450, P0452, 0453)	Not detected
Either of following conditions met	A or B
A. Engine condition	Running
B. Time after key off	5 or 7 or 9.5 hours

P0451 (Fixed/flat monitor):

Monitor runs whenever following DTCs not present	None
Battery voltage	10.5 V or more
Intake air temperature	4.4°to 35°C (40° to 95°F)
Canister pressure sensor malfunction (P0450, P0452, 0453)	Not detected
Atmospheric pressure (absolute pressure)	76 to 110 kPa-a (570 to 825 mmHg-a)
Time after key off	5 or 7 or 9.5 hours

P0450, P0452 and P0453:

Monitor runs whenever following DTCs not present	None
Either of following conditions met	(a) or (b)
(a) Ignition switch	ON
(b) Soak timer	ON

TYPICAL MALFUNCTION THRESHOLDS

P0450: Canister pressure sensor chattering

EVAP pressure	Less than 42.1 kPa-a (315.9 mmHg-a), or more than 123.8 kPa-a (928.4 mmHg-a)

P0451: Canister pressure sensor noise

Frequency that EVAP pressure change 0.3 kPa-g (2.25 mmHg-g) or more	10 times or more in 10 seconds

P0451: Canister pressure sensor fixed/flat

EVAP pressure change during reference pressure	Less than 0.65 kPa-g (4.87 mmHg-g)

P0452: Canister pressure sensor low voltage

EVAP pressure	Less than 42.1 kPa-a (315.9 mmHg-a)

P0453: Canister pressure sensor high voltage

EVAP pressure	More than 123.8 kPa-a (928.4 mmHg-a)

WIRING DIAGRAM

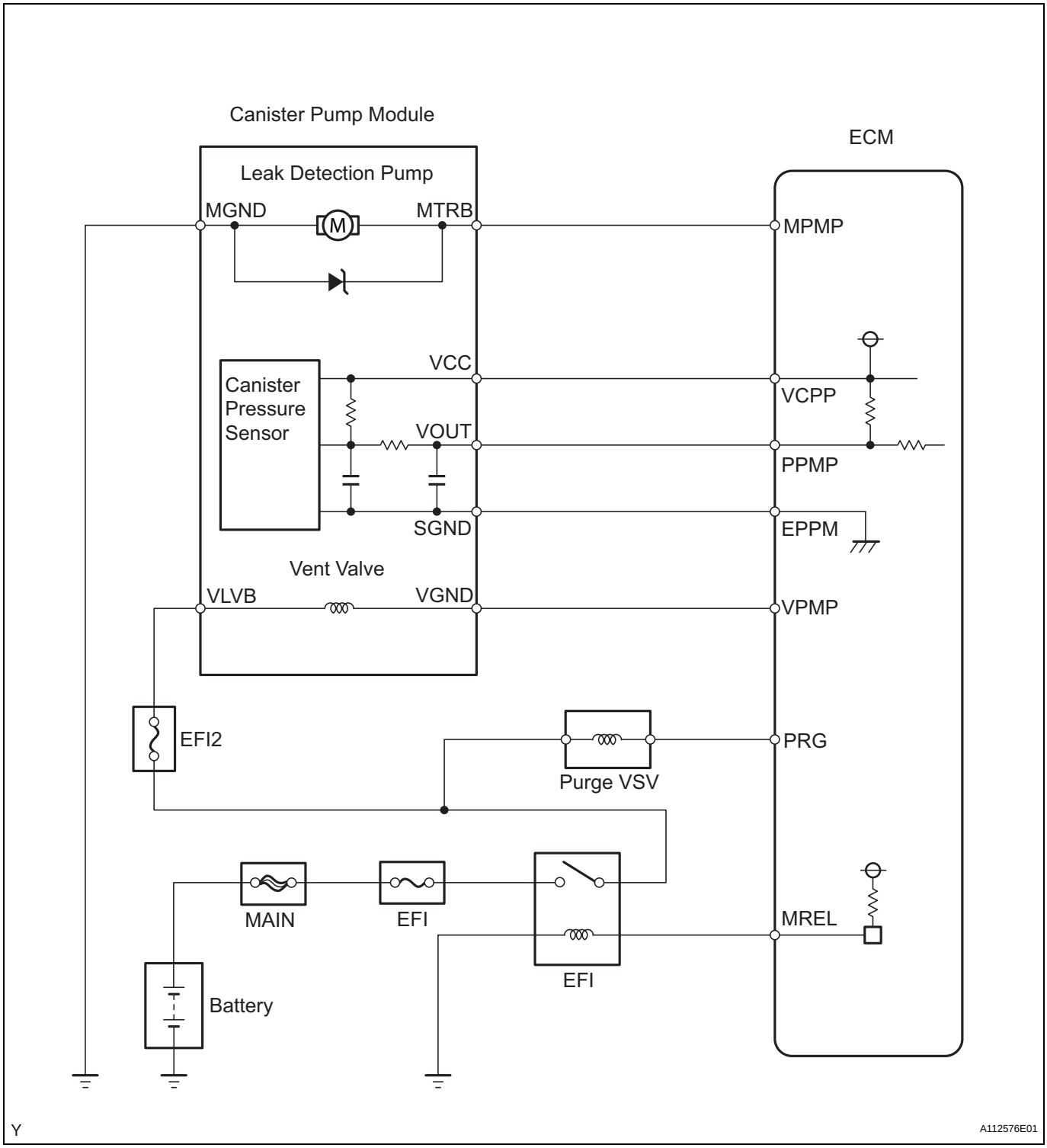

INSPECTION PROCEDURE

NOTICE:

- **When a vehicle is brought into the workshop, leave it as it is. Do not change the vehicle condition. For example, do not tighten the fuel cap.**
- **Do not disassemble the canister pump module.**
- **An intelligent tester is required to conduct the following diagnostic troubleshooting procedure.**

1 CONFIRM DTC AND EVAP PRESSURE

(a) Connect an intelligent tester to the DLC3.
(b) Turn the ignition switch to ON (do not start the engine).
(c) Turn the tester ON.
(d) Select the following menu items: DIAGNOSIS / ENHANCED OBD II / DTC INFO / CURRENT CODES.
(e) Read DTCs.
(f) Select the following menu items: DIAGNOSIS / ENHANCED OBD II / DATA LIST / EVAP / VAPOR PRESS.
(g) Read the EVAP (Evaporative Emission) pressure displayed on the tester.

Result

Display (DTC Output)	Test Results	Suspected Trouble Areas	Proceed To
P0451	-	Canister pressure sensor	C
P0452	Less than 45 kPa-a (430 mmHg-a)	• Wire harness/connector (ECM - Canister pressure sensor) • Canister pressure sensor • Short in ECM circuit	A
P0453	More than 120 kPa-a (900 mmHg-a)	• Wire harness/connector (ECM - Canister pressure sensor) • Canister pressure sensor • Open in ECM circuit	B

B → Go to step 4

C → GO TO EVAP SYSTEM

A

2 CHECK HARNESS AND CONNECTOR (CANISTER PUMP MODULE - ECM)

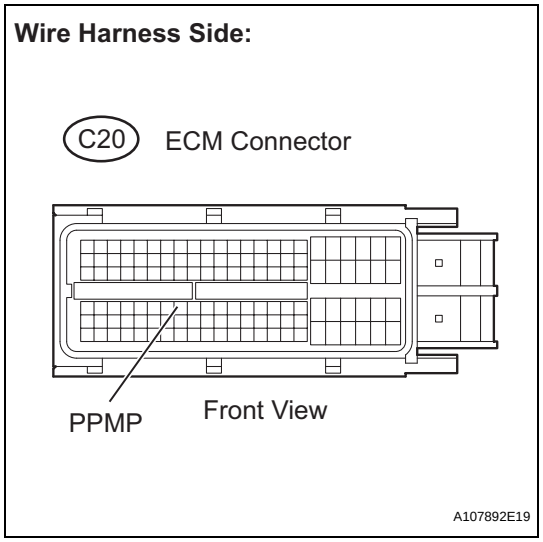

(a) Turn the ignition switch to OFF.
(b) Disconnect the C20 ECM connector.
(c) Check the resistance between PPMP terminal of the ECM connector and the body ground.

Result

Test Results	Suspected Trouble Areas	Proceed To
10 Ω or less	• **Wire harness/connector (ECM - Canister pressure sensor)** • **Short in canister pressure sensor circuit**	**A**
10 kΩ or more	• **Wire harness/connector (ECM - Canister pressure sensor)** • **Short in ECM circuit**	**B**

(d) Reconnect the ECM connector.

B → **Go to step 7**

A

3 CHECK HARNESS AND CONNECTOR (CANISTER PUMP MODULE - ECM)

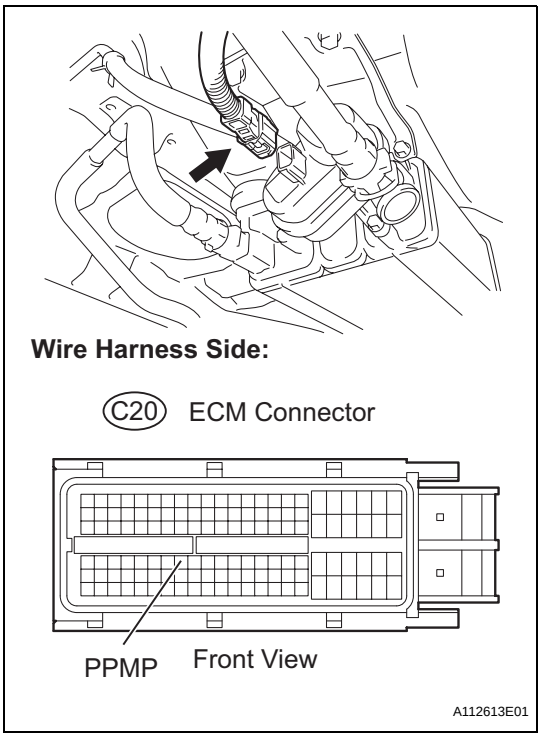

(a) Disconnect the J25 canister pump module connector.
(b) Disconnect the C20 ECM connector.
(c) Check the resistance between PPMP terminal of the ECM connector and the body ground.

Result

Test Results	Suspected Trouble Areas	Proceed To
10 kΩ or more	**Short in canister pressure sensor circuit**	**A**
10 Ω or less	**Short in wire harness/connector (ECM - Canister pressure sensor)**	**B**

(d) Reconnect the canister pump module connector.
(e) Reconnect the ECM connector.

A → **Go to step 5**

B → **Go to step 6**

4 CHECK HARNESS AND CONNECTOR (CANISTER PUMP MODULE - ECM)

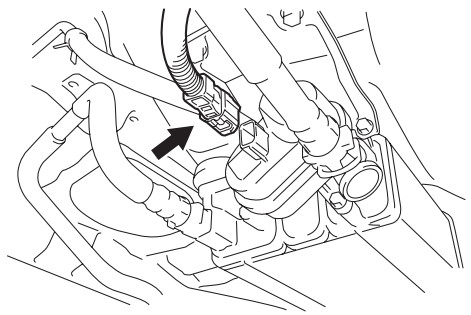

Wire Harness Side:

Canister Pump Module Connector

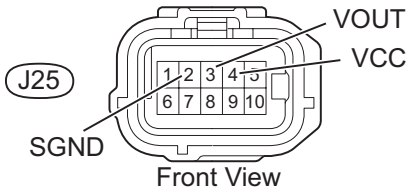

A112614E01

(a) Disconnect the J25 canister pump module connector.
(b) Turn the ignition switch to ON.
(c) Measure the voltage and resistance of the canister connector.

Standard

Tester Connections	Specified Conditions
VCC (J25-4) - Body ground	4.5 to 5.5 V
VOUT (J25-3) - Body ground	
SGND (J25-2) - Body ground	100 Ω or less

ES

Result

Test Results	Suspected Trouble Areas	Proceed To
Voltage and resistance within standard ranges	Open in canister pressure sensor circuit	A
Voltage and resistance outside standard ranges	Open in wire harness/connector (ECM - Canister pressure sensor)	B

(d) Reconnect the canister pump module connector.

A	Go to step 5
B	Go to step 6

5 REPLACE CHARCOAL CANISTER ASSEMBLY

(a) Replace the canister assembly (See page EC-7).
NOTICE:
When replacing the canister, check the canister pump module interior and related pipes for water, fuel and other liquids. If liquids are present, check for disconnections and/or cracks in the following: 1) the pipe from the air inlet port to the canister pump module; 2) the canister filter; and 3) the fuel tank vent hose.

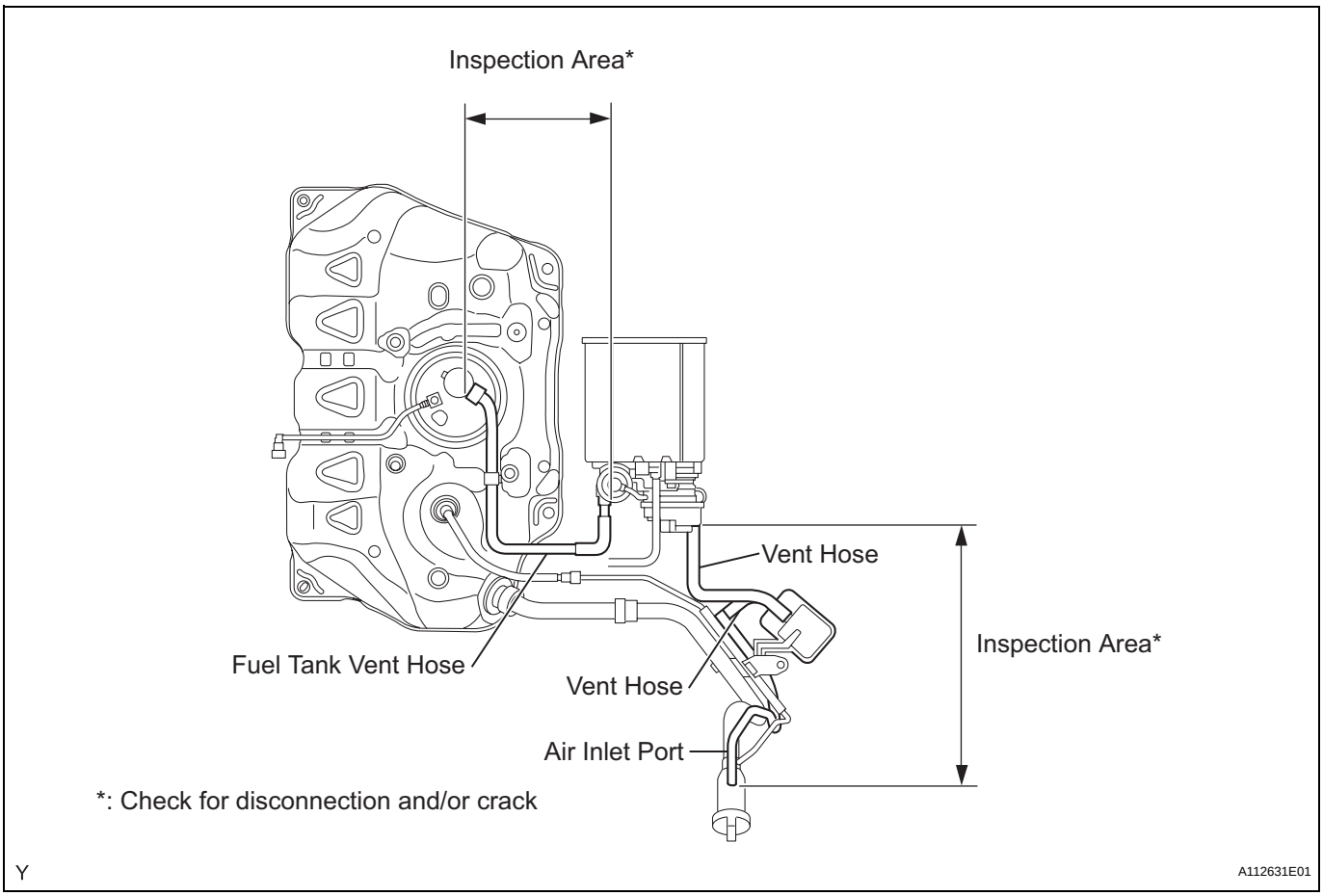

NEXT → **Go to step 8**

6	**REPAIR OR REPLACE HARNESS OR CONNECTOR**

HINT:
If the exhaust tail pipe has been removed, go to the next step before reinstalling it.

NEXT → **Go to step 8**

7	**REPLACE ECM**

(a) Replace the ECM (See page ES-431).

NEXT → **Go to step 8**

8	**CHECK WHETHER DTC OUTPUT RECURS (AFTER REPAIR)**

(a) Connect the intelligent tester to the DLC3.
(b) Turn the ignition switch to ON and turn the tester ON.
(c) Wait for at least 60 seconds.
(d) On the tester, select the following menu items: DIAGNOSIS / ENHANCED OBD II / DTC INFO / PENDING CODES.

HINT:
If no pending DTCs are displayed on the tester, the repair has been successfully completed.

NEXT

COMPLETED

DTC	P0455	Evaporative Emission Control System Leak Detected (Gross Leak)

DTC	P0456	Evaporative Emission Control System Leak Detected (Very Small Leak)

DTC SUMMARY

DTCs	Monitoring Items	Malfunction Detection Conditions	Trouble Areas	Detection Timings	Detection Logic
P0455	EVAP gross leak	Leak detection pump creates negative pressure (vacuum) in EVAP system and EVAP system pressure measured. Reference pressure measured at start and at end of leak check. If stabilized pressure higher than [second reference pressure x 0.2], ECM determines that EVAP system has large leak.	• Fuel cap (loose) • Leakage from EVAP line (Canister - Fuel tank) • Leakage from EVAP line (Purge VSV - Canister) • Canister pump module • Leakage from fuel tank • Leakage from canister	While ignition switch OFF	2 trip
P0456	EVAP small leak	Leak detection pump creates negative pressure (vacuum) in EVAP system and EVAP system pressure measured. Reference pressure measured at start and at end of leak check. If stabilized pressure higher than second reference pressure, ECM determines that EVAP system has small leak.	• Fuel cap (loose) • Leakage from EVAP line (Canister - Fuel tank) • Leakage from EVAP line (Purge VSV - Canister) • Canister pump module • Leakage from fuel tank • Leakage from canister	While ignition switch OFF	2 trip

DESCRIPTION

The description can be found in the EVAP (Evaporative Emission) System (See page ES-319).

INSPECTION PROCEDURE

Refer to the EVAP System (See page ES-324).

MONITOR DESCRIPTION

5 hours* after the ignition switch is turned to OFF, the leak detection pump creates negative pressure (vacuum) in the EVAP system. The ECM monitors for leaks and actuator malfunctions based on the EVAP pressure.

HINT:

*: If the engine coolant temperature is not below 35°C (95°F) 5 hours after the ignition switch is turned to OFF, the monitor check starts 2 hours later. If it is still not below 35°C (95°F) 7 hours after the ignition switch is turned to OFF, the monitor check starts 2.5 hours later.

Sequence	Operations	Descriptions	Duration
-	ECM activation	Activated by soak timer, 5 hours (7 or 9.5 hours) after ignition switch turned to OFF.	-
A	Atmospheric pressure measurement	Vent valve turned OFF (vent) and EVAP system pressure measured by ECM in order to register atmospheric pressure. If pressure in EVAP system not between 76 kPa-a and 110 kPa-a (570 mmHg-a and 825 mmHg-a), ECM cancels EVAP system monitor.	10 seconds
B	First reference pressure measurement	In order to determine reference pressure, leak detection pump creates negative pressure (vacuum) through reference orifice and then ECM checks if leak detection pump and vent valve operate normally.	60 seconds

Sequence	Operations	Descriptions	Duration
C	EVAP system pressure measurement	Vent valve turned ON (closed) to shut EVAP system. Negative pressure (vacuum) created in EVAP system, and EVAP system pressure then measured. Write down measured value as will be used in leak check. If EVAP pressure does not stabilize within 15 minutes, ECM cancels EVAP system monitor.	15 minutes*
D	Purge VSV monitor	Purge VSV opened and then EVAP system pressure measured by ECM. Large increase indicates normality.	10 seconds
E	Second reference pressure measurement	After second reference pressure measurement, leak check performed by comparing first and second reference pressure. If stabilized system pressure higher than second reference pressure, ECM determines that EVAP system leaking.	60 seconds
F	Final check	Atmospheric pressure measured and then monitoring result recorded by ECM.	-

* If only a small amount of fuel is in the fuel tank, it takes longer for the EVAP pressure to stabilize.

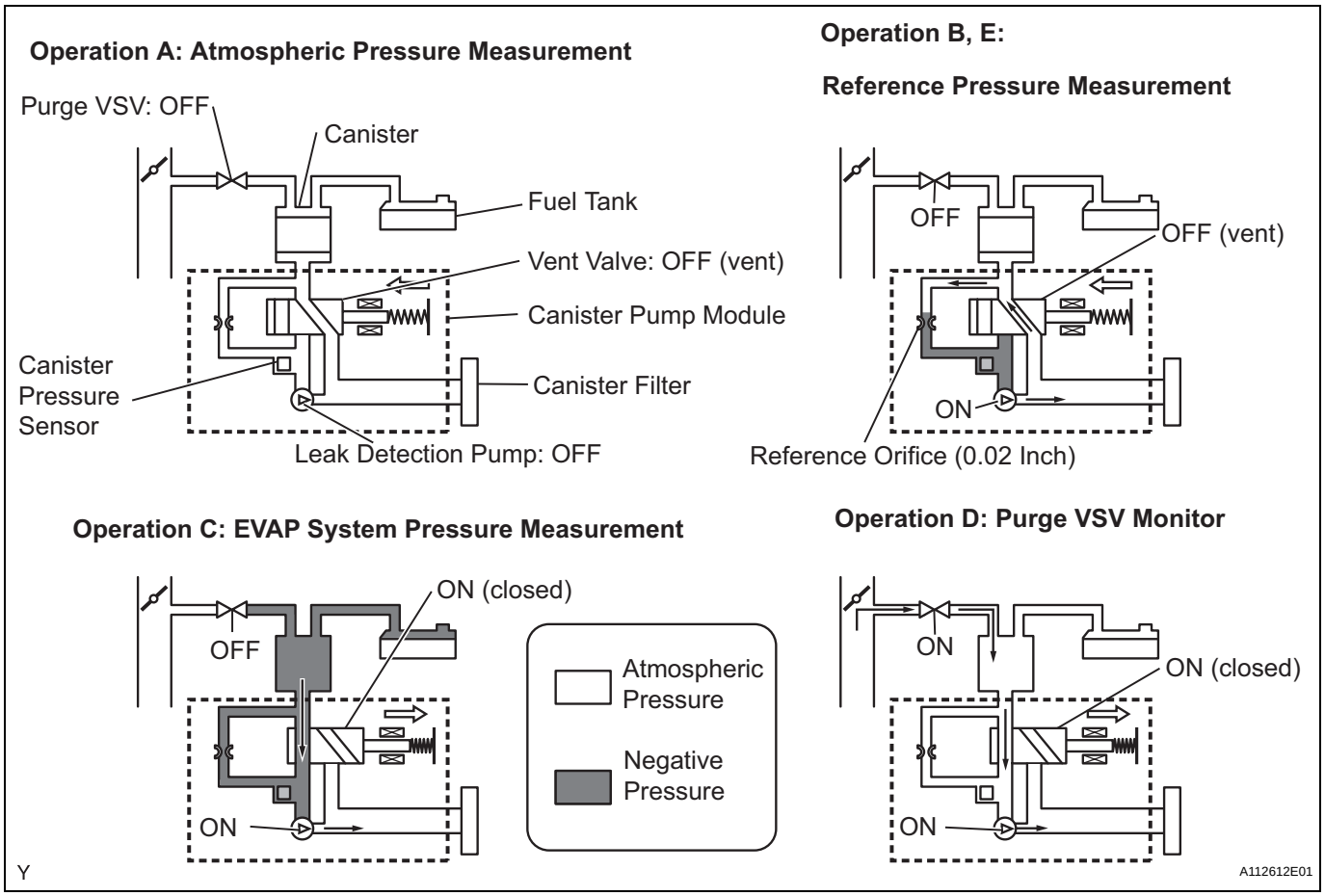

(a) P0455: EVAP gross leak

In operation C, the leak detection pump creates negative pressure (vacuum) in the EVAP system and the EVAP system pressure is measured. If the stabilized system pressure is higher than [second reference pressure x 0.2] (near atmospheric pressure), the ECM determines that the EVAP system has a large leakage, illuminates the MIL and sets the DTC (2 trip detection logic).

(b) P0456: EVAP very small leak
In operation C, the leak detection pump creates negative pressure (vacuum) in the EVAP system and the EVAP system pressure is measured. If the stabilized system pressure is higher than the second reference pressure, the ECM determines that the EVAP system has a small leakage, illuminates the MIL and sets the DTC (2 trip detection logic).

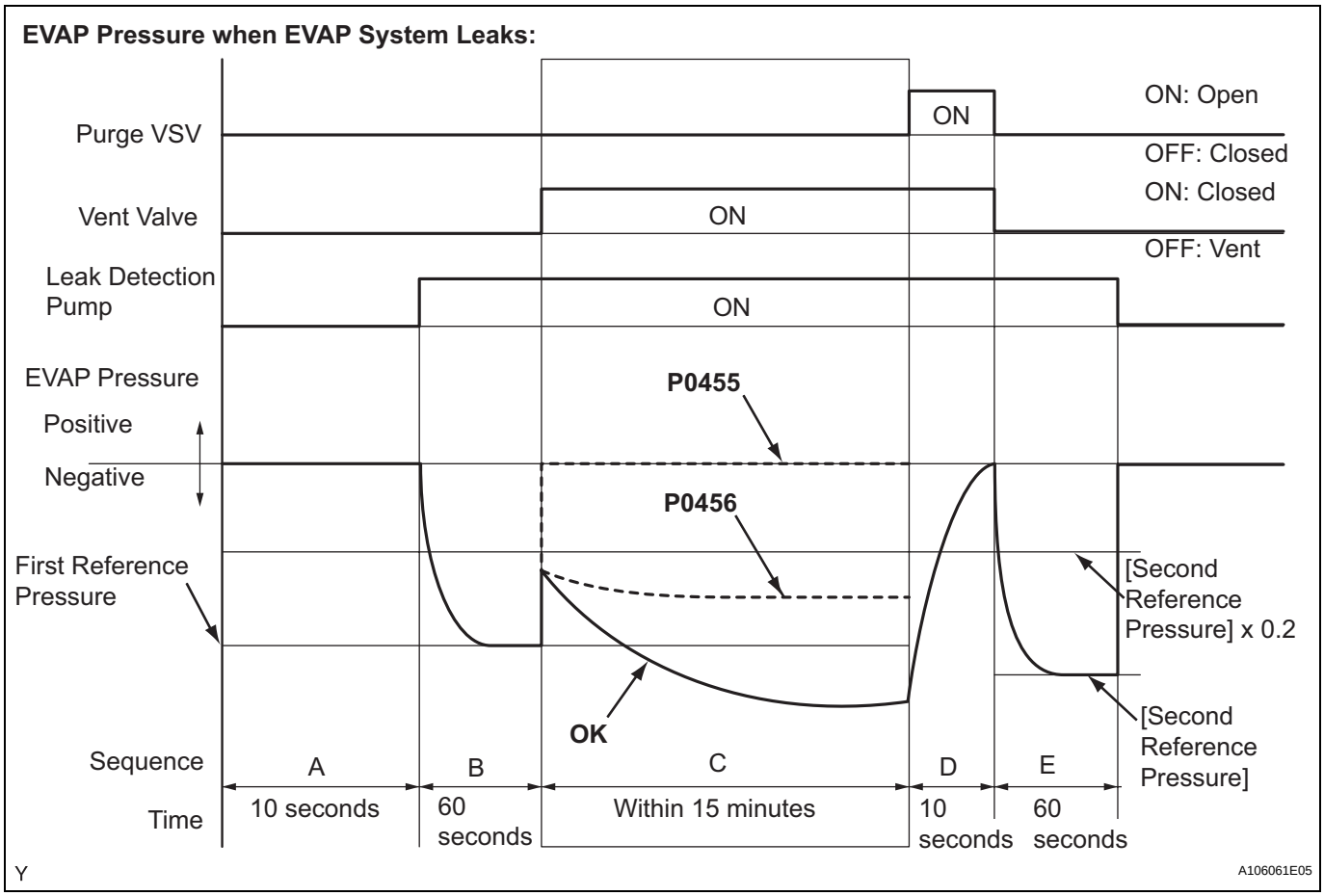

MONITOR STRATEGY

Required Sensors/Components	Purge VSV and canister pump module
Frequency of Operation	Once per driving cycle
Duration	Within 15 minutes (varies with amount of fuel in tank)
MIL Operation	2 driving cycles
Sequence of Operation	None

TYPICAL ENABLING CONDITIONS

Monitor runs whenever following DTCs not present	None
EVAP key-off monitor runs when all of following conditions met	-
Atmospheric pressure	76 to 110 kPa-a (570 to 825 mmHg-a)
Battery voltage	10.5 V or more
Vehicle speed	Below 2.5 mph (4 km/h)
Ignition switch	OFF
Time after key off	5 or 7 or 9.5 hours
Canister pressure sensor malfunction (P0450, P0451, P0452 and P0453)	Not detected
Purge VSV	Not operated by scan tool
Vent valve	Not operated by scan tool

Leak detection pump	Not operated by scan tool
Both of following conditions met before key off	Conditions 1 and 2
1. Duration that vehicle driven	5 minutes or more
2. EVAP purge operation	Performed
ECT	4.4° to 35°C (40° to 95°F)
IAT	4.4°to 35°C (40° to 95°F)

1. Key-off monitor sequence 1 to 8

1. Atmospheric pressure measurement

Next sequence run if following condition set	-
Atmospheric pressure change	Less than 0.3 kPa-g (2.25 mmHg-g) in 1 second

2. First reference pressure measurement

Next sequence run if all of following conditions set	Condition 1, 2 and 3
1. EVAP pressure just after reference pressure measurement start	-1 kPa-g (-7.5 mmHg-g) or less
2. Reference pressure	-4.85 to -1.057 kPa-g (-36.4 to -7.93 mmHg-g)
3. Reference pressure	Saturated within 60 seconds

3. Vent valve stuck closed check

Next sequence run if following condition set	-
EVAP pressure change after vent valve ON (closed)	0.3 kPa-g (2.25 mmHg-g) or more

4. Vacuum introduction

Next sequence run if following condition set	-
EVAP pressure	Saturated within 15 minutes

5. Purge VSV stuck closed check

Next sequence run if following condition set	-
EVAP pressure change after purge VSV ON (open)	0.3 kPa-g (2.25 mmHg-g) or more

6. Second reference pressure measurement

Next sequence run if all of following conditions set	Condition 1, 2, 3 and 4
1. EVAP pressure just after reference pressure	-1 kPa-g (-7.5 mmHg-g) or less
2. Reference pressure	-4.85 to -1.057 kPa-g (-36.4 to -7.93 mmHg-g)
3. Reference pressure	Saturated within 60 seconds
4. Reference pressure difference between first and second	Less than 0.7 kPa-g (5.25 mmHg-g)

7. Leak check

Next sequence run if following condition set	-
EVAP pressure when vacuum introduction complete	Second reference pressure or less

8. Atmospheric pressure measurement

EVAP monitor complete if following condition set	-
Atmospheric pressure difference between sequence 1 and 8	Within 0.3 kPa-g (2.25 mmHg-g)

TYPICAL MALFUNCTION THRESHOLDS

P0455: EVAP gross leak

EVAP pressure when vacuum introduction complete	Higher than reference pressure x 0.2

P0456: EVAP small leak

EVAP pressure when vacuum introduction complete	Between reference pressure and reference pressure x 0.2

MONITOR RESULT

Refer to CHECKING MONITOR STATUS (See page ES-17).

DTC	P0500	Vehicle Speed Sensor "A"

DESCRIPTION

The vehicle speed is detected using the No. 1 vehicle speed sensor. The No. 1 vehicle speed sensor transmits a 4-pluse signal for every revolution of the rotor shaft, which is rotated by the transaxle output shaft via the driven gear. The 4-pluse signal is converted into a more precise rectangular waveform by the waveform shaping circuit inside the combination meter. The signal is then transmitted to the ECM. The ECM determines the vehicle speed based on the frequency of the pulse signal.

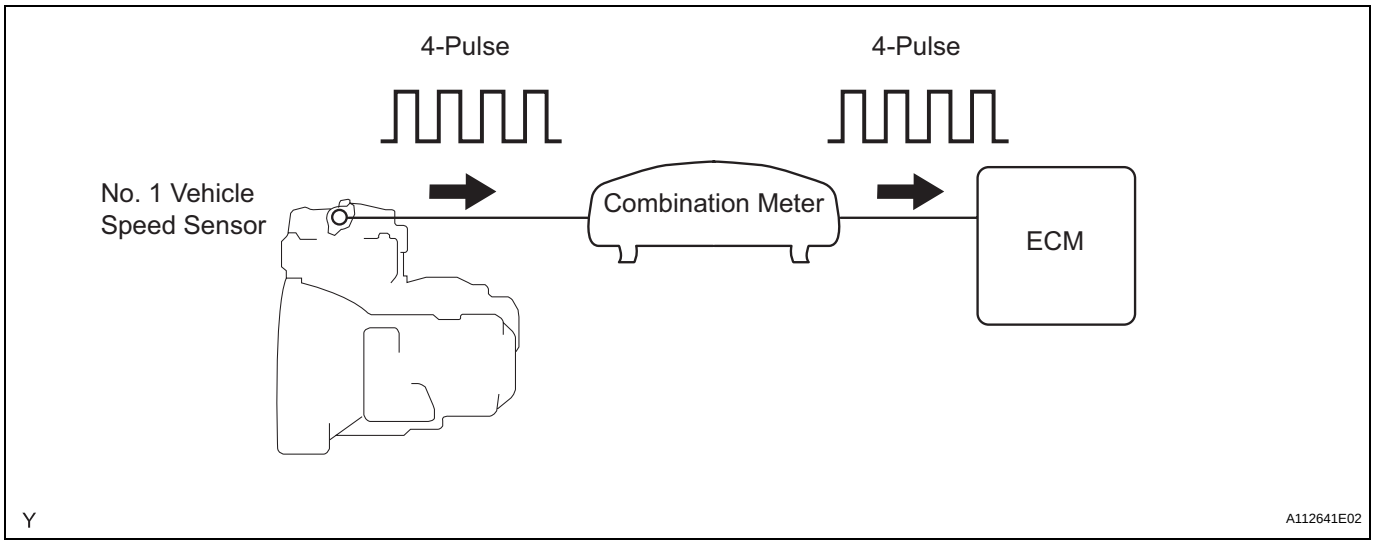

DTC No.	DTC Detection Conditions	Trouble Areas
P0500	While vehicle being driven, no vehicle speed sensor signal transmitted to ECM (1 trip detection logic: Automatic transaxle) (2 trip detection logic: Manual transaxle)	• Open or short in speed signal circuit • Vehicle speed sensor • Combination meter • ECM • Skid control ECU

MONITOR DESCRIPTION

Automatic Transaxle Models

The ECM assumes that the vehicle is being driven, when the indicated engine speed is more than 2,300 rpm and 30 seconds have elapsed since the Park/Neutral Position (PNP) switch was turned OFF. If there is no speed signal from the combination meter, despite these conditions being met, the ECM interprets this as a malfunction in the speed signal circuit. The ECM then illuminates the MIL and sets the DTC.

Manual Transaxle Models

The ECM assumes that the vehicle is being driven, when a high engine load or fuel-cut with the accelerator pedal released continues for 5 seconds or more. If there is no speed signal from the combination meter, despite this condition being met, the ECM interprets this as a malfunction in the speed signal circuit. The ECM then illuminates the MIL and sets the DTC.

MONITOR STRATEGY

Related DTCs	P0500: Vehicle speed sensor "A" pulse input error
Required Sensors/Components (Main)	Vehicle Speed Sensor (VSS), Combination meter and Skid control ECU
Required Sensors/Components (Related)	Park/Neutral Position (PNP) switch, Engine Coolant Temperature (ECT) sensor, Crankshaft Position (CKP) sensor, Throttle Position (TP) sensor and Mass Air Flow (MAF) meter
Frequency of Operation	Continuous

Duration	2 seconds: Automatic transaxle, Intake air temperature -10°C (14°F) or more 8 seconds: Automatic transaxle, Intake air temperature less than -10°C (14°F) 8 seconds: Manual transaxle Case 1 4.25 seconds: Manual transaxle Case 2
MIL Operation	Immediate: Automatic transaxle 2 driving cycles: Manual transaxle
Sequence of Operation	None

TYPICAL ENABLING CONDITIONS

M/T Case 1:

Monitor runs whenever following DTCs not present	P0100 - P0113 (MAF meter) P0115 - P0118 (ECT sensor) P0125 (Insufficient ECT for Closed Loop)
Engine coolant temperature	70°C (158°F) or more
Engine speed	2,000 to 5,000 rpm
Engine load	34.9 % or more
Fuel cut at high engine speed	Not executing

M/T Case 2:

Monitor runs whenever following DTCs not present	P0100 - P0113 (MAF meter) P0115 - P0118 (ECT sensor) P0125 (Insufficient ECT for Closed Loop)
Idle	ON
Fuel cut	ON

A/T:

Monitor runs whenever following DTCs not present	P0120 - P0223, P2135 (TP sensor)
Either of following condition (a) or (b) met:	-
(a) Following conditions 1 and 2 met:	-
1. ECT and ECT sensor	20°C (68°F) or more, and sensor does not malfunction (P0115 or P0116)
2. Time after PNP switch turned OFF	10 seconds or more
(b) Following conditions 1 and 2 met:	-
1. ECT and ECT sensor	Less than 20°C (68°F), and sensor malfunction (P0115 or P0116)
2. Time after PNP switch turned OFF	30 seconds or more
Engine speed	2,080 rpm or more (varies with throttle valve opening angle)
Fuel cut at high engine speed	Not executing
Time after ignition switch turned to ON	0.5 seconds or more
TP sensor learning	Completed

TYPICAL MALFUNCTION THRESHOLDS

Vehicle speed sensor signal	No pulse input

WIRING DIAGRAM

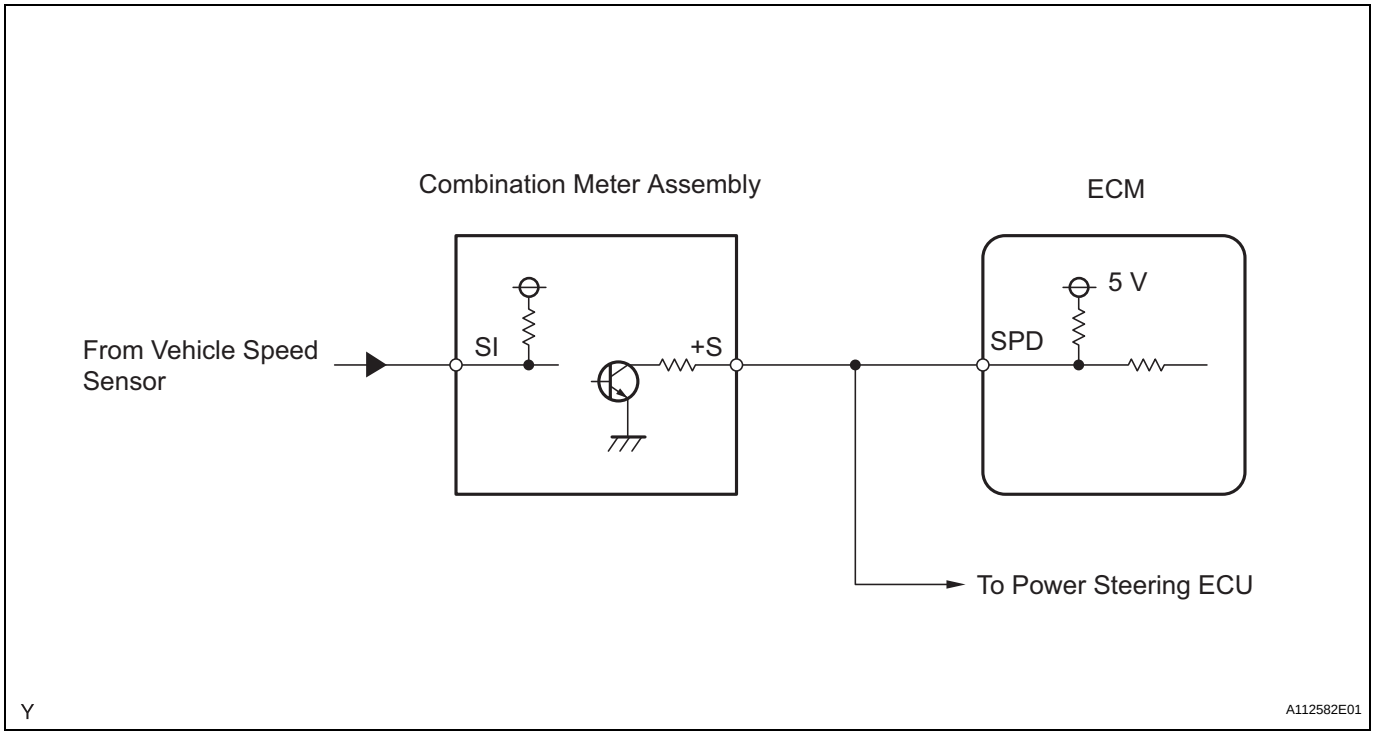

INSPECTION PROCEDURE

HINT:
Read freeze frame data using an intelligent tester. Freeze frame data record the engine condition when malfunctions are detected. When troubleshooting, freeze frame data can help determine if the vehicle was moving or stationary, if the engine was warmed up or not, if the air-fuel ratio was lean or rich, and other data, from the time the malfunction occurred.

1	CHECK OPERATION OF SPEEDOMETER

(a) Drive the vehicle and check whether the operation of the speedometer in the combination meter is normal.
HINT:
- The vehicle speed sensor is operating normally if the speedometer reading is normal.
- If the speedometer does not operate, check it by following the procedure described in Speedometer Malfunction for Hatchback (See page ME-100) or Sedan (See page ME-36).

NG → **GO TO MALFUNCTION IN SPEEDOMETER**

OK

2	READ VALUE USING INTELLIGENT TESTER (VEHICLE SPD)

(a) Connect an intelligent tester to the DLC3.
(b) Turn the ignition switch to ON.
(c) Turn the tester ON.

(d) Select the following menu items: DIAGNOSIS / ENHANCED OBD II / DATA LIST / PRIMARY / VEHICLE SPD.
(e) Drive the vehicle.
(f) Read the value displayed on the tester.
OK:
Vehicle speeds displayed on tester and speedometer display are equal.

OK → **CHECK FOR INTERMITTENT PROBLEMS**

NG

ES

3 CHECK COMBINATION METER ASSEMBLY (+S VOLTAGE)

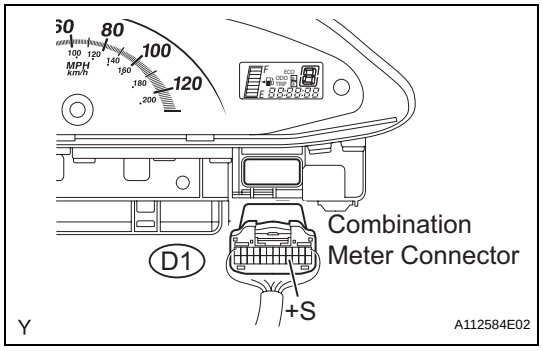

(a) Disconnect the D1 combination meter connector.
(b) Turn the ignition switch to ON.
(c) Measure the voltage between the terminal of the combination meter and the body ground.
Standard voltage

Tester Connections	Specified Conditions
+S (D1-16) - Body ground	4.5 to 5.5 V

(d) Reconnect the combination meter connector.

NG → **Go to step 5**

OK

4 CHECK COMBINATION METER ASSEMBLY (SPD SIGNAL WAVEFORM)

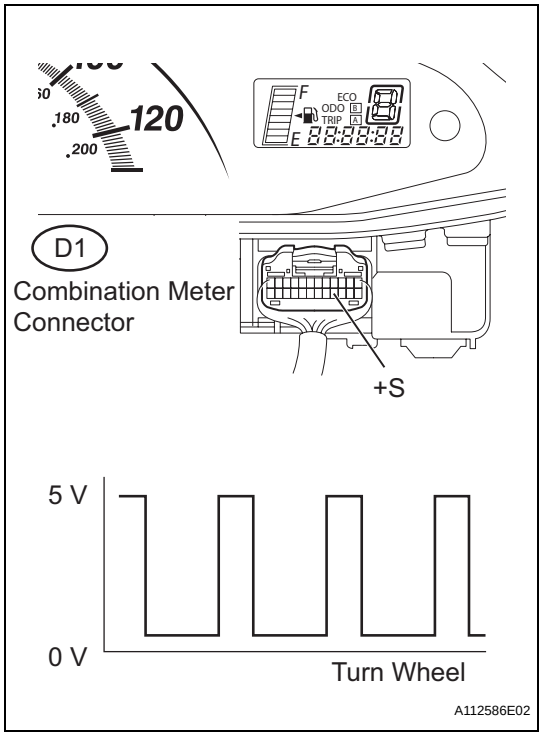

(a) Shift the transmission gear selector lever to the neutral position.
(b) Jack up the vehicle.
(c) Turn the ignition switch to ON.
(d) Check the voltage between the terminal of the combination meter and the body ground while the wheel is turned slowly.
Standard voltage

Tester Connections	Specified Conditions
+S (D1-16) - Body ground	Voltage generated intermittently

HINT:
The output voltage should fluctuate up and down, similarly to the diagram, when the wheel is turned slowly.

NG → **REPLACE COMBINATION METER ASSEMBLY**

OK

5	CHECK HARNESS AND CONNECTOR (COMBINATION METER ASSEMBLY - ECM)

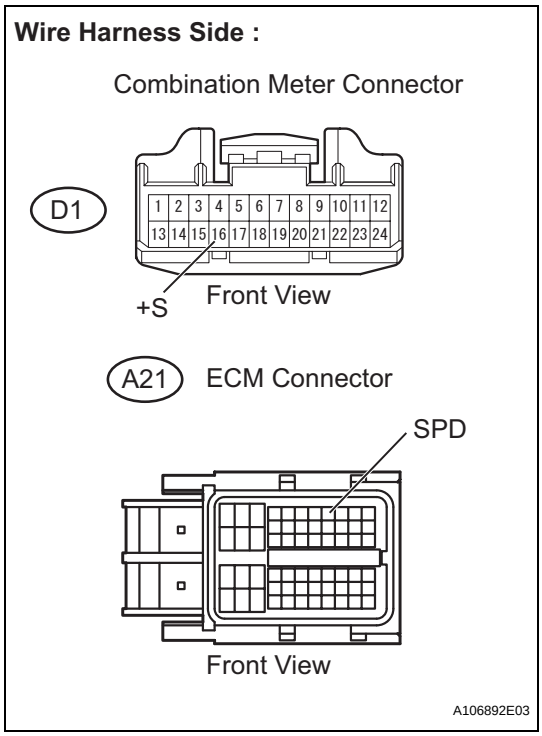

(a) Disconnect the D1 combination meter connector.
(b) Disconnect the A21 ECM connector.
(c) Check the resistance.

Standard resistance (check for open)

Tester Connections	Specified Conditions
+S (D1-16) - SPD (A21-8)	Below 1 Ω

Standard resistance (check for short)

Tester Connections	Specified Conditions
+S (D1-16) or SPD (A21-8) - Body ground	10 kΩ or higher

(d) Reconnect the combination meter connector.
(e) Reconnect the ECM connector.

NG → **REPAIR OR REPLACE HARNESS OR CONNECTOR**

OK

REPLACE ECM

ES

DTC	P0504	Brake Switch "A" / "B" Correlation

DESCRIPTION

The stop light switch is a duplex system that transmits two signals: STP and ST1-. These two signals are used by the ECM to monitor whether or not the brake system is working properly. If the signals, which indicate the brake pedal is being depressed and released, are detected simultaneously, the ECM interprets this as a malfunction in the stop light switch and sets the DTC.

HINT:

The normal conditions are as shown in the table below. The signals can be read using an intelligent tester.

Signals	Brake Pedal Released	In Transition	Brake Pedal Depressed
STP	OFF	ON	ON
ST1-	ON	ON	OFF

DTC No.	DTC Detection Conditions	Trouble Areas
P0504	Conditions (a), (b) and (c) continue for 0.5 seconds or more (1 trip detection logic): (a) Ignition switch ON (b) Brake pedal released (c) STP signal OFF when ST1- signal OFF	• Short in stop light switch signal circuit • STOP fuse • IGN fuse • Stop light switch • ECM

WIRING DIAGRAM

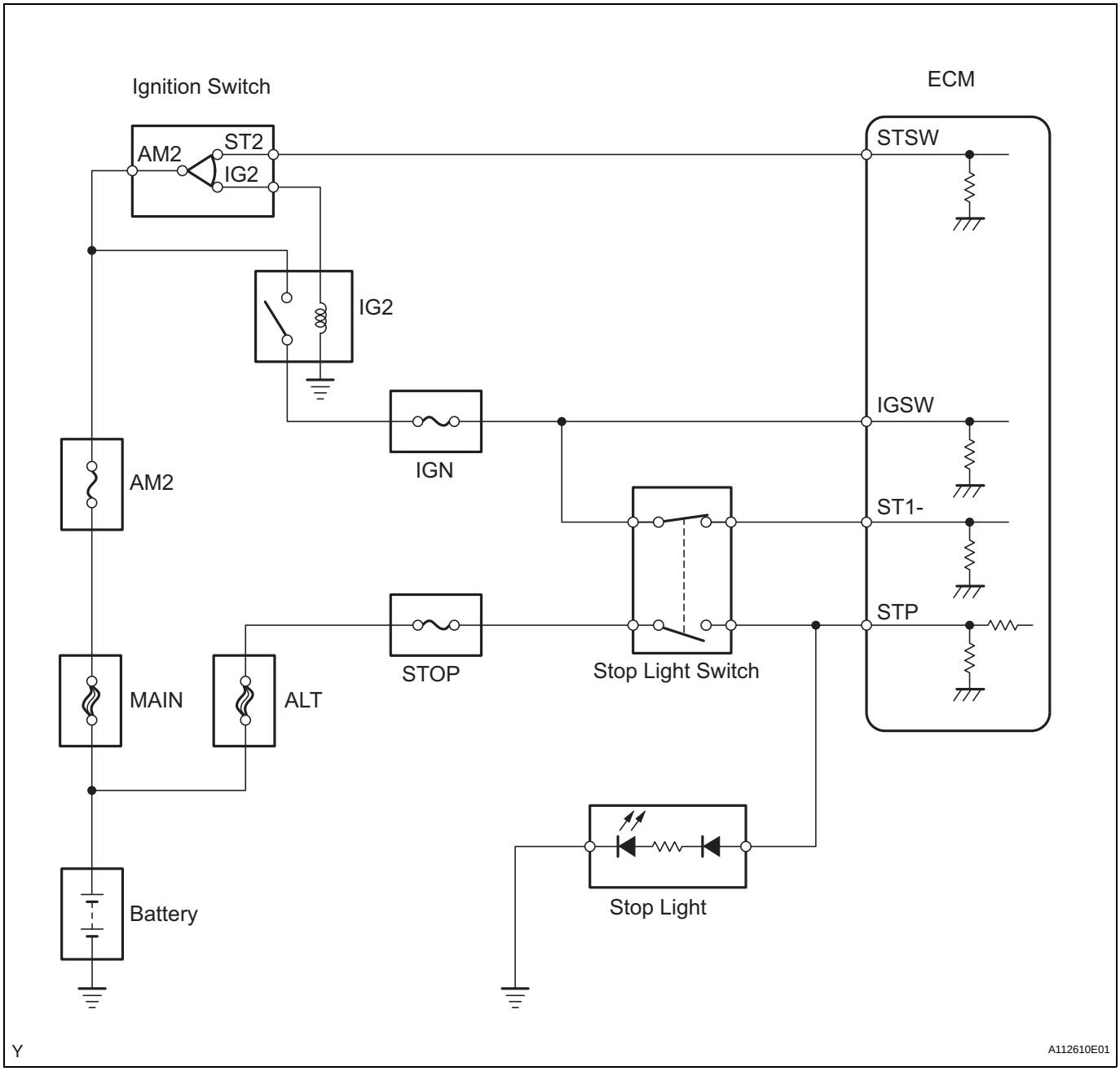

INSPECTION PROCEDURE

HINT:

- Read freeze frame data using an intelligent tester. Freeze frame data record the engine condition when malfunctions are detected. When troubleshooting, freeze frame data can help determine if the vehicle was moving or stationary, if the engine was warmed up or not, if the air-fuel ratio was lean or rich, and other data, from the time the malfunction occurred.
- STP signal conditions can be checked using an intelligent tester.
  (a) Connect the intelligent tester to the DLC3.
  (b) Turn the ignition switch to ON.
  (c) Turn the tester ON.
  (d) Select the following menu items: DIAGNOSIS / ENHANCED OBD II / DATA LIST / PRIMARY / STOP LIGHT SW.
  (e) Check the STP signal when the brake pedal is depressed and released.

Brake Pedal Operation	Specified Conditions
Depressed	STP signal ON
Released	STP signal OFF

1 CHECK STOP LIGHT SWITCH ASSEMBLY (TERMINAL B VOLTAGE)

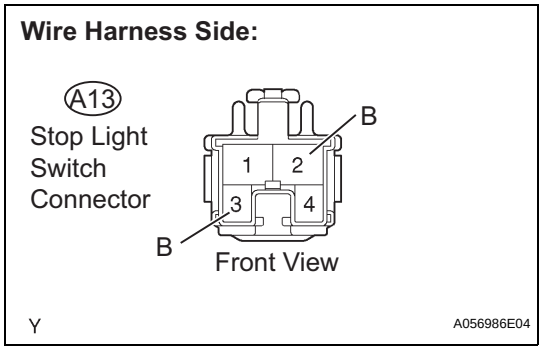

(a) Disconnect the A13 stop light switch connector.
(b) Turn the ignition switch to ON.
(c) Measure the voltage between the terminals of the A13 stop light switch connector and body ground.
Standard voltage

Tester Connections	Specified Conditions
B (A13-2) - Body ground	11 to 14 V
B (A13-3) - Body ground	

(d) Reconnect the stop light switch connector.

NG → **Go to step 4**

OK

2 INSPECT STOP LIGHT SWITCH ASSEMBLY

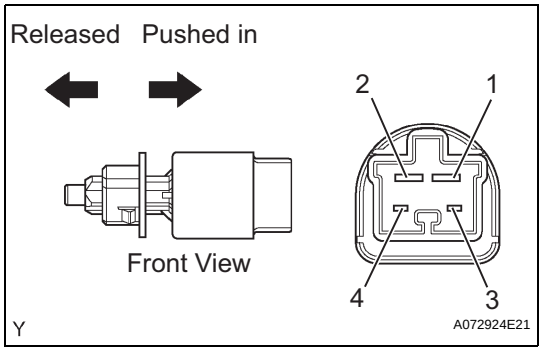

(a) Remove the stop light switch assembly.
(b) Check the resistance.
Standard resistance

Tester Connections	Switch Positions	Specified Conditions
1 - 2	Switch pin released	Below 1 Ω
	Switch pin pushed in	10 kΩ or higher
3 - 4	Switch pin released	10 kΩ or higher
	Switch pin pushed in	Below 1 Ω

(c) Reinstall the stop light switch assembly.

NG → **REPLACE STOP LIGHT SWITCH ASSEMBLY**

OK

ES

3 CHECK ECM (STP AND ST1 - VOLTAGE)

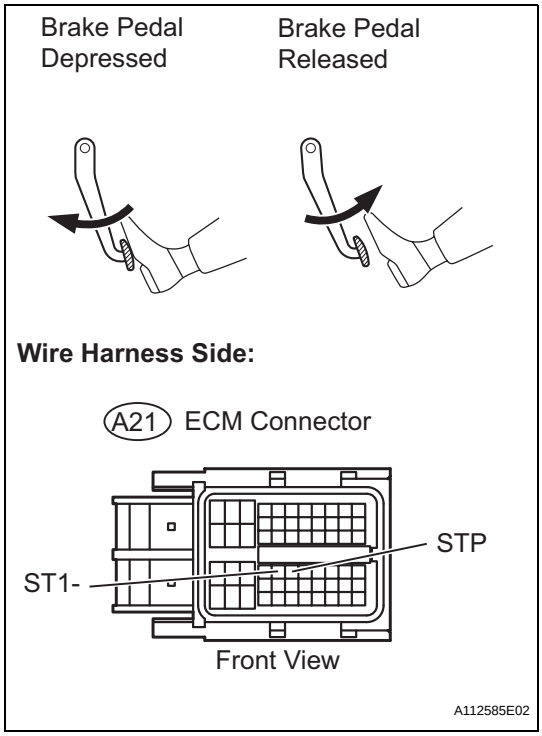

(a) Disconnect the A21 ECM connector.
(b) Turn the ignition switch to ON.
(c) Measure the voltage between the terminals ST1- and STP of the A21 ECM connector and body ground.
Standard voltage

Tester Connections	Brake Pedal Operations	Specified Conditions
ST1- (A21-35) - Body ground	Released	11 to 14 V
	Depressed	0 to 3 V
STP (A21-36) - Body ground	Released	0 to 3 V
	Depressed	11 to 14 V

(d) Reconnect the ECM connector.

NG → **REPAIR OR REPLACE HARNESS OR CONNECTOR**

OK

REPLACE ECM

4 INSPECT FUSE (STOP AND IGN FUSE)

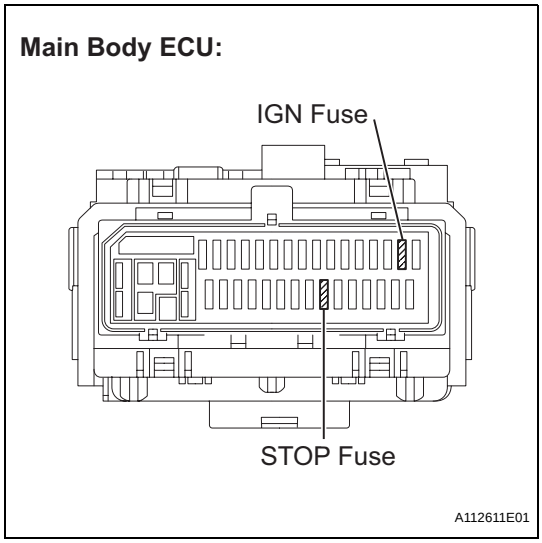

(a) Remove the STOP and IGN fuses from the main body ECU.
(b) Check the resistance.
Standard resistance:
Below 1 Ω
(c) Reinstall the STOP and IGN fuses.

NG → **CHECK FOR SHORTS IN ALL HARNESSES AND CONNECTORS CONNECTED TO FUSE AND REPLACE FUSE**

OK

REPAIR OR REPLACE HARNESS OR CONNECTOR

DTC	P0505	Idle Control System Malfunction

DESCRIPTION

The idling speed is controlled by the ETCS (Electronic Throttle Control System). The ETCS is comprised of: 1) the one valve type throttle body; 2) the throttle actuator, which operates the throttle valve; 3) the Throttle Position (TP) sensor, which detects the opening angle of the throttle valve; 4) the Accelerator Pedal Position (APP) sensor, which detects the accelerator pedal position; and 5) the ECM, which controls the ETCS. Based on the target idling speed, the ECM controls the throttle actuator to provide the proper throttle valve opening angle.

DTC No.	DTC Detection Conditions	Trouble Areas
P0505	Idling speed continues to vary greatly from target idling speed (2 trip detection logic)	• ETCS • Air induction system • PCV hose connections • ECM

MONITOR DESCRIPTION

The ECM monitors the idling speed and idling air flow volume to conduct Idle Speed Control (ISC). The ECM determines that the ISC system is malfunctioning if the following conditions apply:

- The learned idling air flow volume remains at the maximum or minimum volume 5 times or more during a drive cycle.
- After driving at 6.25 mph (10 km/h) or more, the actual engine idling speed varies from the target idling speed by between 100 rpm and 200 rpm, 5 times or more during a drive cycle.

Example:

If the actual idling speed varies from the target idling speed by more than 200 rpm* 5 times during a drive cycle, the ECM illuminates the MIL and sets the DTC.

HINT:

*: Threshold idling speed varies with engine load.

Example:

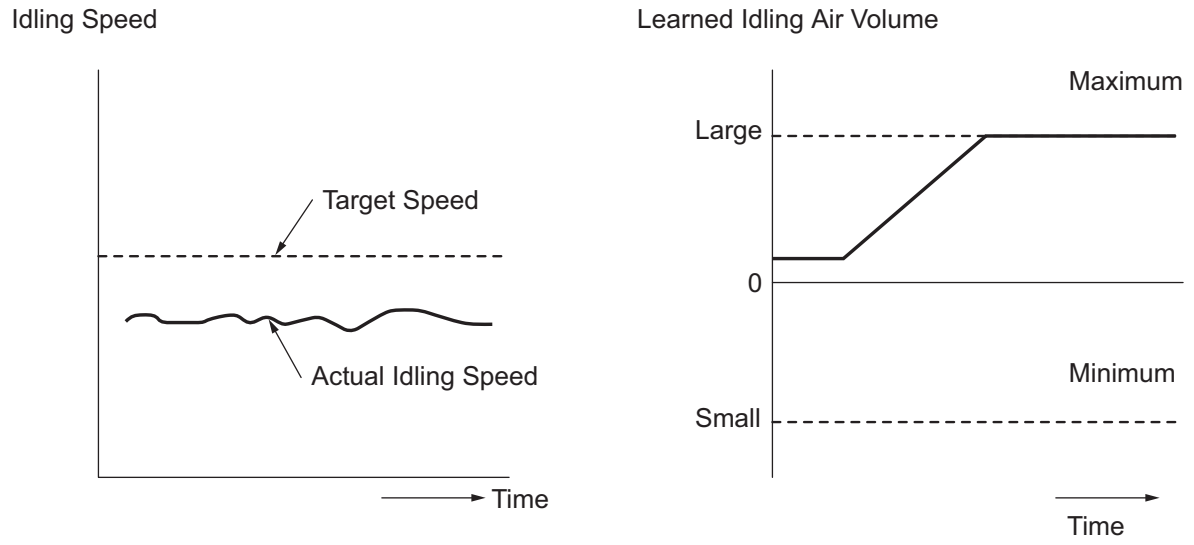

Y

A121611E02

MONITOR STRATEGY

Related DTCs	P0505: ISC function
Required Sensors/Components (Main)	ETCS
Required Sensors/Components (Related)	Crankshaft position sensor, Engine coolant temperature sensor, and Vehicle speed sensor
Frequency of Operation	Once per driving cycle: Functional check Continuous: Range check
Duration	10 minutes: Functional check 10 seconds: Range check
MIL Operation	2 driving cycles: Functional check Immediate: Range check
Sequence of Operation	None

TYPICAL ENABLING CONDITIONS

Functional check:

Engine	Running

Range check:

Time after first missing voltage change	10 seconds or more
Output signal duty	10 to 90 %
Battery voltage	11 V or more

TYPICAL MALFUNCTION THRESHOLDS

Functional check:

Either of following conditions 1 or 2 met	-
1. Frequency that both of following conditions (a) and (b) set	5 times or more
(a) Engine rpm - Target engine rpm	Less than -100 rpm, or more than 150 rpm
(b) Vehicle condition	Stop after vehicle was driven by 6.25 mph (10 km/h) or more
2. Frequency that both of following conditions (c) and (d) set	Once
(c) Engine rpm - Target engine rpm	Less than -100 rpm, or more than 150 rpm
(d) IAC flow rate learning value	0.55 L/sec or less, or 3.82 L/sec

Range check:

Number of missing output voltage changes	2,000 times or more

ES

INSPECTION PROCEDURE

HINT:

- The following conditions may also cause DTC P0505 to be set:
  (a) The floor carpet overlapping slightly onto the accelerator pedal, causing the accelerator pedal to be slightly depressed and therefore the throttle valve position to be slightly open.
  (b) The accelerator pedal being not fully released.
- Read freeze frame data using an intelligent tester. Freeze frame data record the engine condition when malfunctions are detected. When troubleshooting, freeze frame data can help determine if the vehicle was moving or stationary, if the engine was warmed up or not, if the air-fuel ratio was lean or rich, and other data, from the time the malfunction occurred.

1 CHECK ANY OTHER DTCS OUTPUT (IN ADDITION TO DTC P0505)

(a) Connect an intelligent tester to the DLC3.
(b) Turn the ignition switch to ON.
(c) Turn the tester ON.
(d) Select the following the menu items: DIAGNOSIS / ENHANCED OBD II / DTC INFO / CURRENT CODES.
(e) Read DTCs.

Result

Display (DTC Output)	Proceed To
P0505	A
P0505 and other DTCs	B

HINT:
If any DTCs other than P0505 are output, troubleshoot those DTCs first.

B → **GO TO DTC CHART**

A

2 CHECK PCV HOSE CONNECTIONS

OK:
PCV hose is connected correctly and is not damaged.

NG → **REPAIR OR REPLACE PCV HOSE**

OK

3	CHECK AIR INDUCTION SYSTEM

(a) Check the air induction system for vacuum leakage.
OK:
No leakage from air induction system.

NG → **REPAIR OR REPLACE AIR INDUCTION SYSTEM**

OK

ES

4	CHECK THROTTLE VALVE

(a) Check the throttle valve condition.

NG → **REPLACE THROTTLE BODY ASSEMBLY**

OK

REPLACE ECM

DTC	P050A	Cold Start Idle Air Control System Performance

DTC	P050B	Cold Start Ignition Timing Performance

DESCRIPTION

The Electronic Throttle Control System (ETCS) controls the engine idling speed. The ETCS operates the throttle actuator to open and close the throttle valve, and adjusts the intake air amount to achieve the target idling speed.
In addition, the ECM retards the ignition timing and the ETCS increases the intake air amount to quickly increase the catalyst temperature at cold start to reduce emissions.

DTC No.	DTC Detection Conditions	Trouble Areas
P050A	Accumulated intake air amount during 10 seconds of idling after cold start, less than threshold (2 trip detection logic)	• Throttle body assembly • Mass air flow meter • Air induction system • PCV hose connections • VVT system • Air cleaner filter element • ECM
P050B	Ignition timing retard value insufficient for 5 seconds or more during 10 seconds of P050A monitoring duration at cold start (2 trip detection logic)	• Throttle body assembly • Mass air flow meter • Air induction system • PCV hose connections • VVT system • Air cleaner filter element • ECM

ES

MONITOR DESCRIPTION

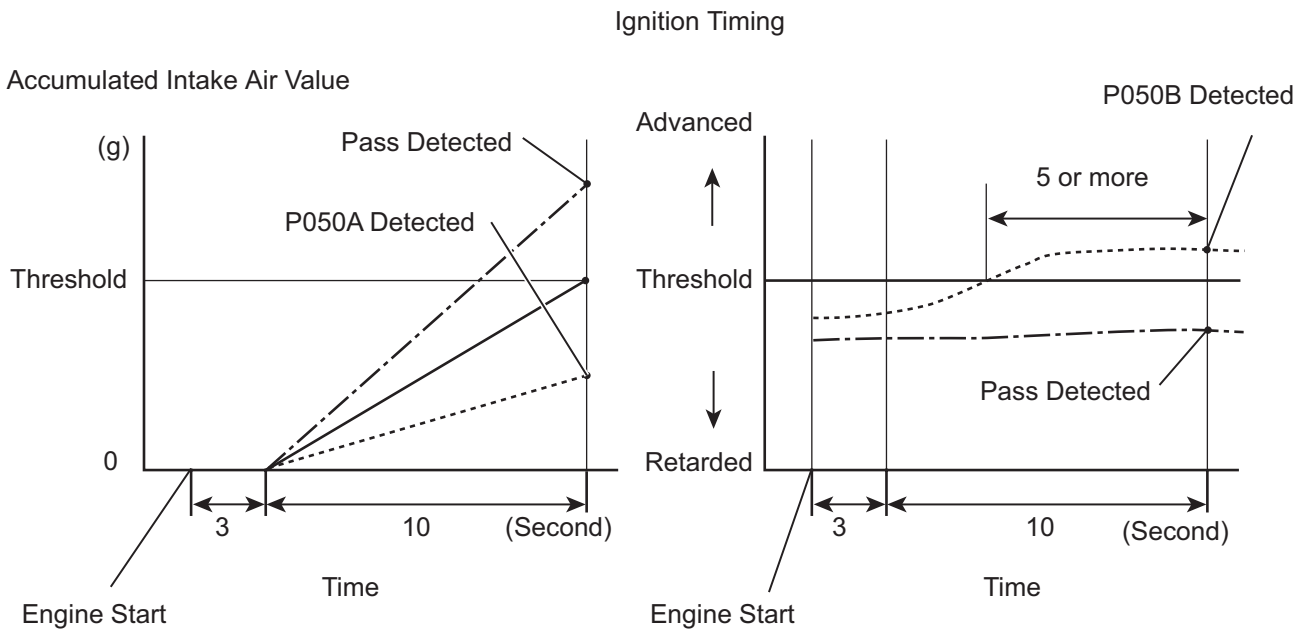

The ECM monitors the intake air amount during idling and the ignition timing.
When the Engine Coolant Temperature (ECT) is between -10°C and 50 °C (14°F and 122°F), the ECM calculates the idling intake air amount for 10 seconds, beginning 3 seconds after the engine starts.
When the accumulated value is below the threshold, the ECM interprets this as a malfunction in the Idle Speed Control (ISC) system at cold start.
The ECM also monitors the ignition timing at cold start, and judges it to be incorrect when it is advanced to the same value for a warm engine for 5 seconds or more of the 10 second monitoring period.
Example:
P050A is detected when all conditions below are met (2 trip detection logic).
1. The ECT is between -10°C and 50 °C (14°F and 122°F) when the engine starts.
2. The engine idles for 13 seconds after engine start.
3. The accumulated intake air amount is below the threshold.

The ECM sets the DTC and illuminates the MIL 13 seconds after the engine is next started.

NOTICE:
When the negative battery terminal is disconnected during inspection or repairs, the ISC learning values are cleared. The ISC learning must be performed by warming up the engine and idling for 5 minutes with the ECT at 75°C (167°F) or more because DTCs cannot be detected with the ISC learning values cleared.

MONITOR STRATEGY

Related DTCs	P050A: Idle speed control problem at cold P050B: Idle ignition timing problem at cold
Required Sensors/Components (Main)	Mass air flow meter
Required Sensors/Components (Related)	Engine Coolant Temperature (ECT) sensor, Throttle position sensor, Vehicle speed sensor
Frequency of Operation	Once per driving cycle
Duration	10 seconds
MIL Operation	2 driving cycles
Sequence of Operation	None

TYPICAL ENABLING CONDITIONS

P050A:

Battery voltage	8 V or more
Time after engine start	3 seconds or more
Starter	OFF
ECT at engine start	-10°C (14°F) or more
ECT	-10°C to 50°C (14°F to 122°F)
Engine idling time	3 seconds or more
Fuel-cut	OFF
Vehicle speed	Less than 1.875 mph (3 km/h)
Time after shift position changed (A/T)	1 second or more
Atmospheric pressure	76 kPa (570 mmHg) or more

P050B:

Battery voltage	8 V or more
Time after engine start	3 seconds or more
Starter	OFF
ECT at engine start	-10°C (14°F) or more
ECT	-10°C to 50°C (14°F to 122°F)
Engine idling time	3 seconds or more
Fuel-cut	OFF
Vehicle speed	Less than 1.875 mph (3 km/h)

TYPICAL MALFUNCTION THRESHOLDS

P050A:

Accumulated air flow amount (M/T)	Varies with ECT (Example: Less than 13.75 g)
Accumulated air flow amount (A/T)	Varies with ECT (Example: Less than 17.5 g)

P050B:

Accumulated time when ignition timing retard value insufficient	5 seconds or more

INSPECTION PROCEDURE

HINT:
Read freeze frame data using an intelligent tester. Freeze frame data record the engine condition when malfunctions are detected. When troubleshooting, freeze frame data can help determine if the vehicle was moving or stationary, if the engine was warmed up or not, if the air-fuel ratio was lean or rich, and other data, from the time the malfunction occurred.

1 CHECK ANY OTHER DTCS OUTPUT (IN ADDITION TO DTC P050A AND/OR P050B)

(a) Connect an intelligent tester to the DLC3.
(b) Turn the ignition switch to ON.
(c) Turn the tester ON.
(d) Select the following the menu items: DIAGNOSIS / ENHANCED OBD II / DTC INFO / CURRENT CODES.
(e) Read the DTCs.

Result

Display (DTC Output)	Proceed To
P050A and/or P050B	A
P050A and/or P050B and other DTCs	B

HINT:
If any DTCs other than P050A and P050B are output, troubleshoot those DTCs first.

B → **GO TO DTC CHART**

A

2 READ VALUE USING INTELLIGENT TESTER (FUEL TRIM)

HINT:
Calculate the total fuel trim values to check the characteristic deviation of the mass air flow meter.
(a) Connect the intelligent tester to the DLC3.
(b) Turn the ignition switch to ON.
(c) Turn the tester ON.
(d) Select the following menu items: DIAGNOSIS / ENHANCED OBD II / DATA LIST / PRIMARY / SHORT FT #1 and LONG FT #1.
(e) Read the values displayed on the tester.
(f) Add together the SHORT FT #1 and LONG FT #1 values to obtain the total FUEL TRIM.

OK:
Total of SHORT FT #1 and LONG FT #1 values is between -20 % and 20 %.

OK → **Go to step 12**

NG

3 PERFORM ACTIVE TEST USING INTELLIGENT TESTER (OPERATE OCV)

(a) Connect the intelligent tester to the DLC3.
(b) Start the engine and turn the tester ON.
(c) Warm up the engine.
(d) Select the following menu items: DIAGNOSIS / ENHANCED OBD II / ACTIVE TEST / VVT CTRL B1.
(e) Check the engine speed while operating the Oil Control Valve (OCV) using the tester.

OK

Tester Operations	Specified Conditions
OCV OFF	Normal engine speed
OCV ON	Engine idles roughly or stalls (soon after OCV switched from OFF to ON)

NG → **Go to step 8**

OK

4 CHECK PCV HOSE CONNECTIONS

OK:
PCV hose is connected correctly and is not damaged.

NG → **Go to step 9**

OK

5 CHECK AIR INDUCTION SYSTEM

(a) Check the air induction system for vacuum leakage.
OK:
No leakage from air induction system.

NG → **Go to step 10**

OK

6 CHECK AIR CLEANER FILTER ELEMENT SUB-ASSEMBLY

(a) Visually check that the air cleaner filter element is not excessively contaminated with dirt or oil.
OK:
Air cleaner filter element is not excessively contaminated with dirt or oil.

NG → Go to step 11

OK

7	REPLACE MASS AIR FLOW METER

NEXT → Go to step 15

8	CHECK AND REPAIR VVT SYSTEM

NEXT → Go to step 15

ES

9	REPAIR OR REPLACE PCV HOSE

NEXT → Go to step 15

10	REPAIR OR REPLACE AIR INDUCTION SYSTEM

NEXT → Go to step 15

11	REPLACE AIR CLEANER FILTER ELEMENT SUB-ASSEMBLY

NEXT → Go to step 15

12	CHECK THROTTLE VALVE

(a) Check for deposits around the throttle valve and throttle valve condition.
OK:
No deposits around throttle valve and throttle valve moves smoothly.

NG → Go to step 14

OK

13	REPLACE ECM

NEXT → Go to step 15

14	REPAIR OR REPLACE THROTTLE BODY ASSEMBLY

NEXT → Go to step 15

15	CHECK WHETHER DTC OUTPUT RECURS (DTC P050A AND/OR P050B)

NOTICE:
In this operation, the engine must be cold (the same level as the engine coolant temperature recorded in the freeze frame data).

(a) Connect the intelligent tester to the DLC3.
(b) Turn the ignition switch to ON.
(c) Turn the tester ON.
(d) Clear DTCs (See page ES-34).
(e) Switch the ECM from normal mode to check mode using the tester (See page ES-37).
(f) Start the engine to idle for a minute.
OK:
Stable fast idling.
(g) Read DTCs.
OK:
No DTC output.

NEXT

END

DTC	P0560	System Voltage

DESCRIPTION

The battery supplies electricity to the ECM even when the ignition switch is in the OFF position. This power allows the ECM to store data such as DTC history, freeze frame data and fuel trim values. If the battery voltage falls below a minimum level, these memories are cleared and the ECM determines that there is a malfunction in the power supply circuit. When the engine is next started, the ECM illuminates the MIL and sets the DTC.

DTC No.	DTC Detection Conditions	Trouble Areas
P0560	Open in ECM back up power source circuit (1 trip detection logic)	• Open in back up power source circuit • Battery • Battery terminals • EFI fuse • ECM

HINT:
If DTC P0560 is set, the ECM does not store other DTCs or the data stored in the ECM are partly eraced.

MONITOR STRATEGY

Related DTCs	P0560: ECM system voltage
Required Sensors/Components (Main)	ECM
Required Sensors/Components (Related)	-
Frequency of Operation	Continuous
Duration	3 seconds
MIL Operation	Immediate (MIL illuminated after next engine start)
Sequence of Operation	None

TYPICAL ENABLING CONDITIONS

Monitor runs whenever following DTCs not present	None

TYPICAL MALFUNCTION THRESHOLDS

ECM power source	Less than 3.5 V

WIRING DIAGRAM

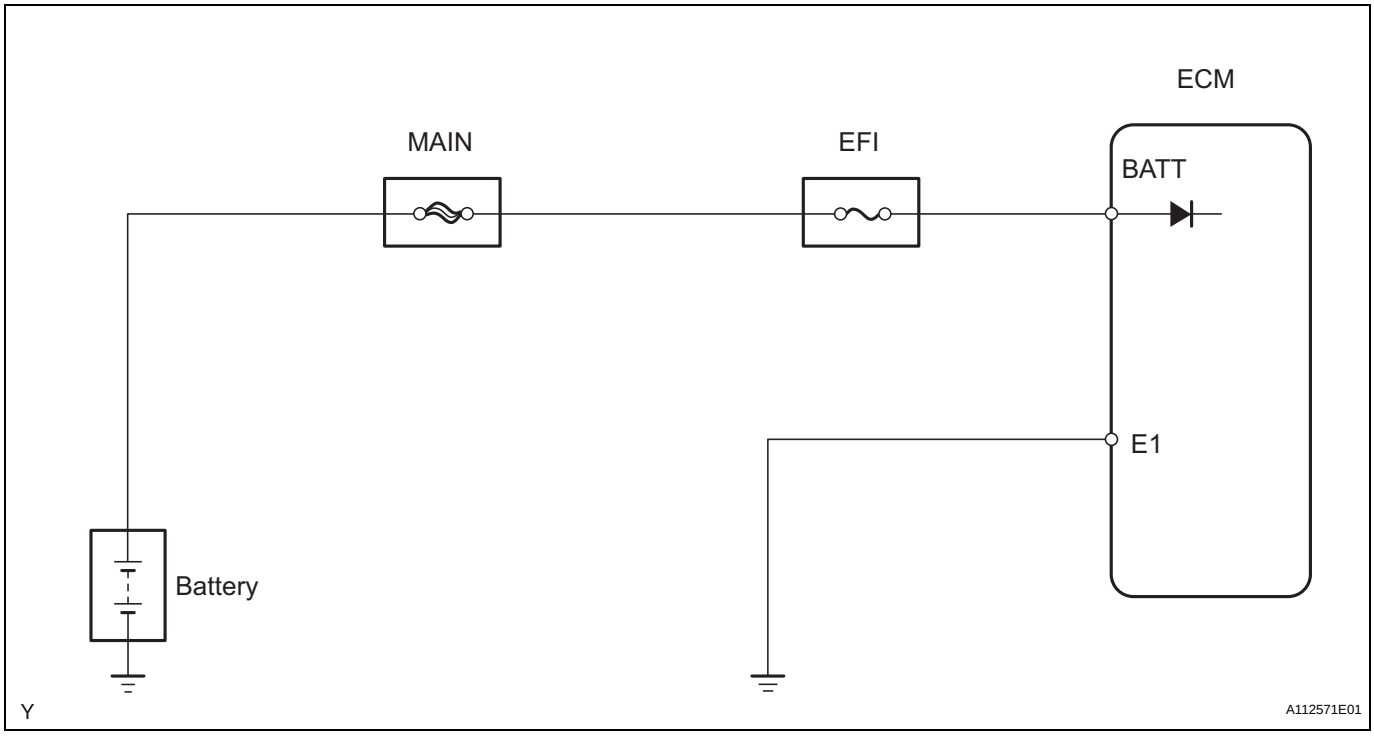

INSPECTION PROCEDURE

HINT:
Read freeze frame data using an intelligent tester. Freeze frame data record the engine condition when malfunctions are detected. When troubleshooting, freeze frame data can help determine if the vehicle was moving or stationary, if the engine was warmed up or not, if the air-fuel ratio was lean or rich, and other data, from the time the malfunction occurred.

1	CHECK FUSE (EFI FUSE)

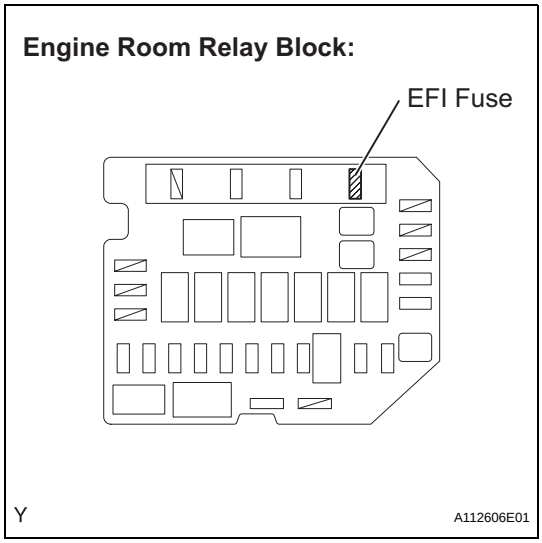

(a) Remove the EFI fuse from the engine room relay block.
(b) Check the resistance of the EFI fuse.
Standard resistance:
Below 1 Ω
(c) Reinstall the EFI fuse.

NG → **CHECK FOR SHORTS IN ALL HARNESSES AND CONNECTORS CONNECTED TO FUSE AND REPLACE FUSE**

OK

2 CHECK HARNESS AND CONNECTOR (ECM - EFI FUSE, EFI FUSE - BATTERY)

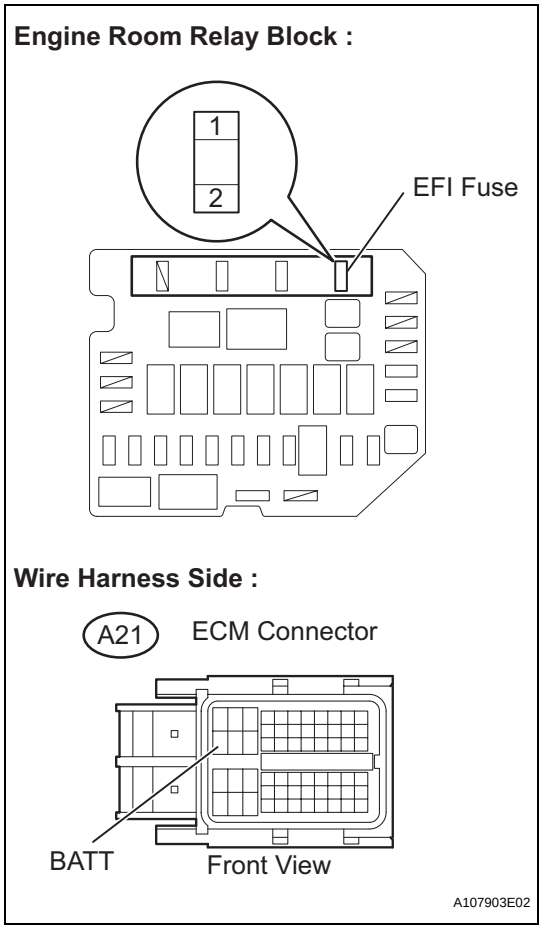

(a) Check the harness and the connector between the EFI fuse and ECM.
  (1) Remove the EFI fuse from the engine room relay block.
  (2) Disconnect the A21 ECM connector.
  (3) Check the resistance.
  Standard resistance (Check for open)

Tester Connections	Specified Conditions
EFI fuse (2) - BATT (A21-20)	Below 1 Ω

Standard resistance (Check for short)

Tester Connections	Specified Conditions
EFI fuse (2) or BATT (A21-20) - Body ground	10 kΩ or higher

  (4) Reconnect the ECM connector.
  (5) Reinstall the EFI fuse.

(b) Check the harness and the connector between the EFI fuse and battery.
  (1) Remove the EFI fuse from the engine room relay block.
  (2) Disconnect the positive battery terminal.
  (3) Check the resistance.
  Standard resistance (Check for open)

Tester Connections	Specified Conditions
Battery positive terminal - EFI fuse (1)	Below 1 Ω

Standard resistance (Check for short)

Tester Connections	Specified Conditions
Battery positive terminal or EFI fuse (1) - Body ground	10 kΩ or higher

  (4) Reconnect the positive battery terminal.
  (5) Reinstall the EFI fuse.

NG → **REPAIR OR REPLACE HARNESS OR CONNECTOR**

OK

3 INSPECT BATTERY

(a) Check that the battery is not depleted.
OK:
Battery is not depleted

NG → **REPLACE BATTERY**

OK

ES

4	CHECK BATTERY TERMINAL

(a) Check that the battery terminals are not loose or corroded.
OK:
Battery terminals are not loose or corroded

NG → **REPAIR OR REPLACE BATTERY TERMINAL**

OK

ES

5	CHECK WHETHER DTC OUTPUT RECURS

(a) Connect the intelligent tester to the DLC3.
(b) Turn the ignition switch to ON and turn the tester ON.
(c) Clear DTCs (See page ES-34).
(d) Turn the ignition switch to OFF and turn the tester OFF.
(e) Start the engine and turn the tester ON.
(f) Select the following menu items: DIAGNOSIS / ENHANCED OBD II / DTC INFO / CURRENT CODES.
(g) Read DTCs.

Result

Display (DTC Output)	Proceed To
P0560	A
No output	B

B → **CHECK FOR INTERMITTENT PROBLEMS**

A

REPLACE ECM

DTC	P0604	Internal Control Module Random Access Memory (RAM) Error

DTC	P0606	ECM / PCM Processor

DTC	P0607	Control Module Performance

DTC	P0657	Actuator Supply Voltage Circuit / Open

DESCRIPTION

The ECM continuously monitors its own internal memory status, internal circuits, and output signals transmitted to the throttle actuator. This self-check ensures that the ECM is functioning properly. If any malfunction is detected, the ECM sets the appropriate DTC and illuminates the MIL.
The ECM memory status is diagnosed by internal mirroring of the main CPU and the sub CPU to detect Random Access Memory (RAM) errors. The two CPUs also perform continuous mutual monitoring. The ECM illuminates the MIL and sets a DTC if: 1) outputs from the two CPUs are different or deviate from the standards, 2) the signals sent to the throttle actuator deviate from the standards, 3) a malfunction is found in the throttle actuator supply voltage, and 4) any other ECM malfunction is found.

DTC No.	DTC Detection Conditions	Trouble Areas
P0604 P0606 P0607 P0657	ECM internal error (1 trip detection logic)	ECM

MONITOR STRATEGY

Related DTCs	P0604: ECM RAM error P0606: ECM range check P0607: ECM CPU malfunction P0657: ETCS power supply
Required Sensors/Components (Main)	ECM
Required Sensors/Components (Related)	-
Frequency of Operation	Once per driving cycle: P0657 Continuous: P0604, P0606 and P0607
Duration	Within 1 second
MIL Operation	Immediate
Sequence of Operation	None

TYPICAL ENABLING CONDITIONS

Monitor runs whenever following DTCs not present	None

TYPICAL MALFUNCTION THRESHOLDS

ECM RAM errors (P0604):

RAM mirror check	Fail

ECM CPU range check (P0606):

Either of following conditions met:	-
Difference between throttle valve position of main CPU and throttle valve position of sub CPU	0.3 V or more
Difference between accelerator pedal position of main CPU and accelerator pedal position of sub CPU	0.3 V or more

ECM CPU malfunction (P0607):

Either A or B met	-
A. All of following conditions (a), (b) and (c) met	-
(a) CPU reset	1 time or more
(b) Learned TP - learned APP	0.4 V or more
(c) Electronic throttle actuator	OFF
B. CPU reset	2 times or more

ETCS power supply (P0657):

ETCS power supply when ignition switch turned to ON	7 V or more

INSPECTION PROCEDURE

Read freeze frame data using an intelligent tester. Freeze frame data record the engine condition when malfunctions are detected. When troubleshooting, freeze frame data can help determine if the vehicle was moving or stationary, if the engine was warmed up or not, if the air-fuel ratio was lean or rich, and other data, from the time the malfunction occurred.

1	**CHECK ANY OTHER DTCS OUTPUT (IN ADDITION TO DTC P0604, P0606, P0607 or P0657)**

(a) Connect an intelligent tester to the DLC3.
(b) Turn the ignition switch to ON.
(c) Turn the tester ON.
(d) Select the following menu items: DIAGNOSIS / ENHANCED OBD II / DTC INFO / CURRENT CODES.
(e) Read DTCs.

Result

Display (DTC Output)	Proceed To
P0604, P0606, P0607 or P0657	A
P0604, P0606, P0607 or P0657 and other DTCs	B

B → **GO TO DTC CHART**

A

REPLACE ECM

DTC	P0617	Starter Relay Circuit High

DESCRIPTION

The cranking holding control system provides a current to the starter when the ECM detects the ignition switch's start signal (STSW). When the ECM judges that the engine has started, the system cuts the current to the starter. When the ECM receives the STSW signal, it turns on the ACC (Accessory) relay, which prevents flickering of the combination meter, clock and audio system. Also, the ECM sends a signal to the ECM's STAR terminal. Then the STAR output signal travels through the Park/Neutral Position (PNP) switch to the ST relay, causing the starter to activate. When the engine is cranking, the starter operation signal is sent to the ECM's STA terminal.

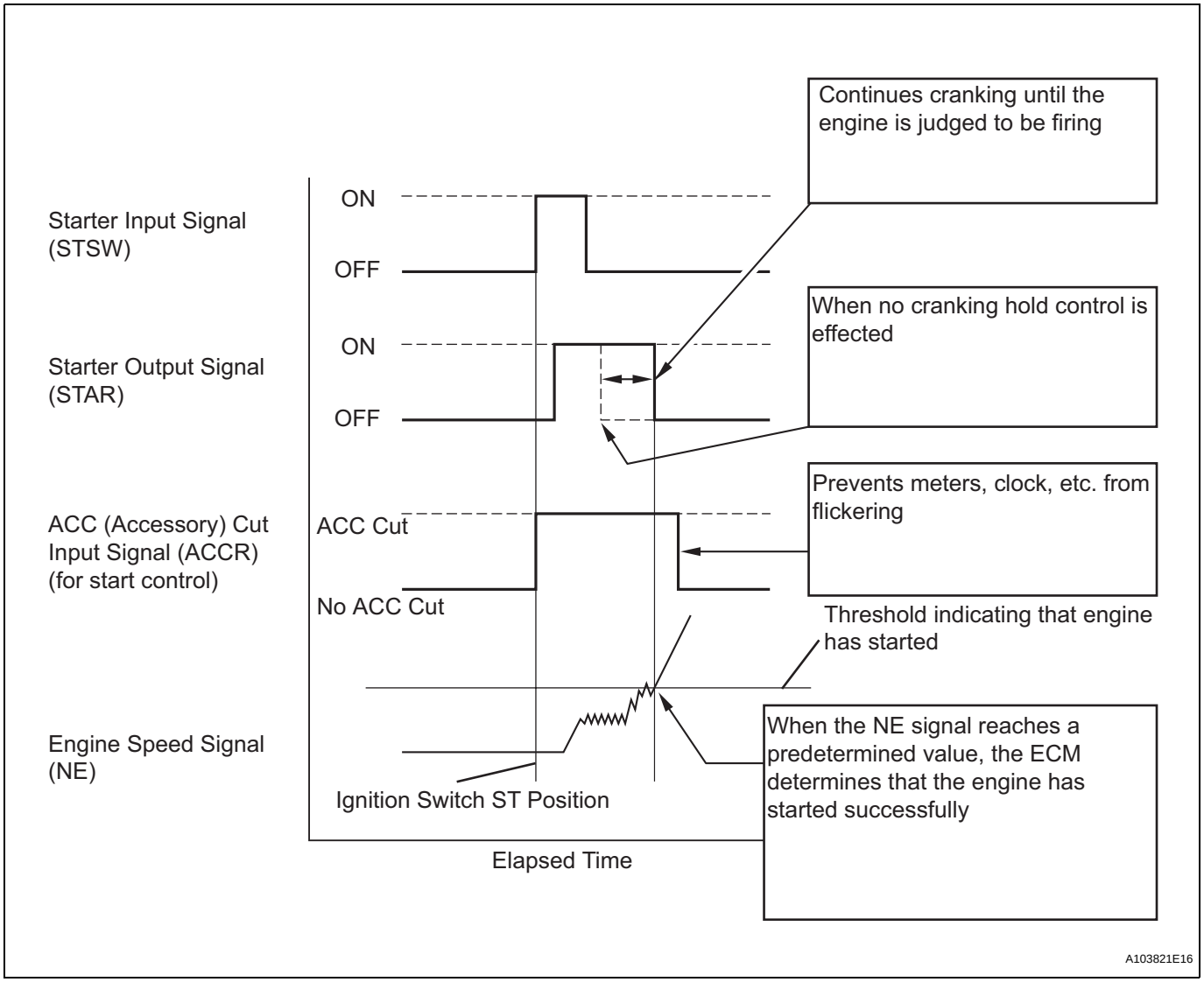

While the engine is being cranked, the positive battery voltage is applied to terminal STA of the ECM. If the ECM detects the Starter Control (STA) signal while the vehicle is being driven, it determines that there is a malfunction in the STA circuit. The ECM then illuminates the MIL and sets the DTC.
This monitor runs when the vehicle is driven at 12.43 mph (20 km/h) for over 20 seconds.

DTC No.	DTC Detection Conditions	Trouble Areas
P0617	When conditions (a), (b) and (c) met for 20 seconds (1 trip detection logic): (a) Vehicle speed more than 12.43 mph (20 km/h) (b) Engine speed more than 1,000 rpm (c) STA signal ON	• Park/Neutral Position (PNP) switch (A/T*) • Clutch start switch (M/T*) • Starter relay circuit • Ignition switch • ECM

*: A/T denotes Automatic Transaxle models and M/T denotes Manual Transaxle models.

MONITOR STRATEGY

Related DTCs	P0617: Starter signal
Required Sensors/Components (Main)	STARTER relay, PNP switch, Clutch start switch and Ignition switch
Required Sensors/Components (Related)	Vehicle Speed Sensor (VSS), Crankshaft Position (CKP) sensor
Frequency of Operation	Continuous
Duration	20 seconds
MIL Operation	Immediate
Sequence of Operation	None

TYPICAL ENABLING CONDITIONS

Monitor runs whenever following DTCs not present	None
Battery voltage	10.5 V or more
Vehicle speed	12.43 mph (20 km/h) or more
Engine speed	1,000 rpm or more

TYPICAL MALFUNCTION THRESHOLDS

Starter signal	ON

WIRING DIAGRAM

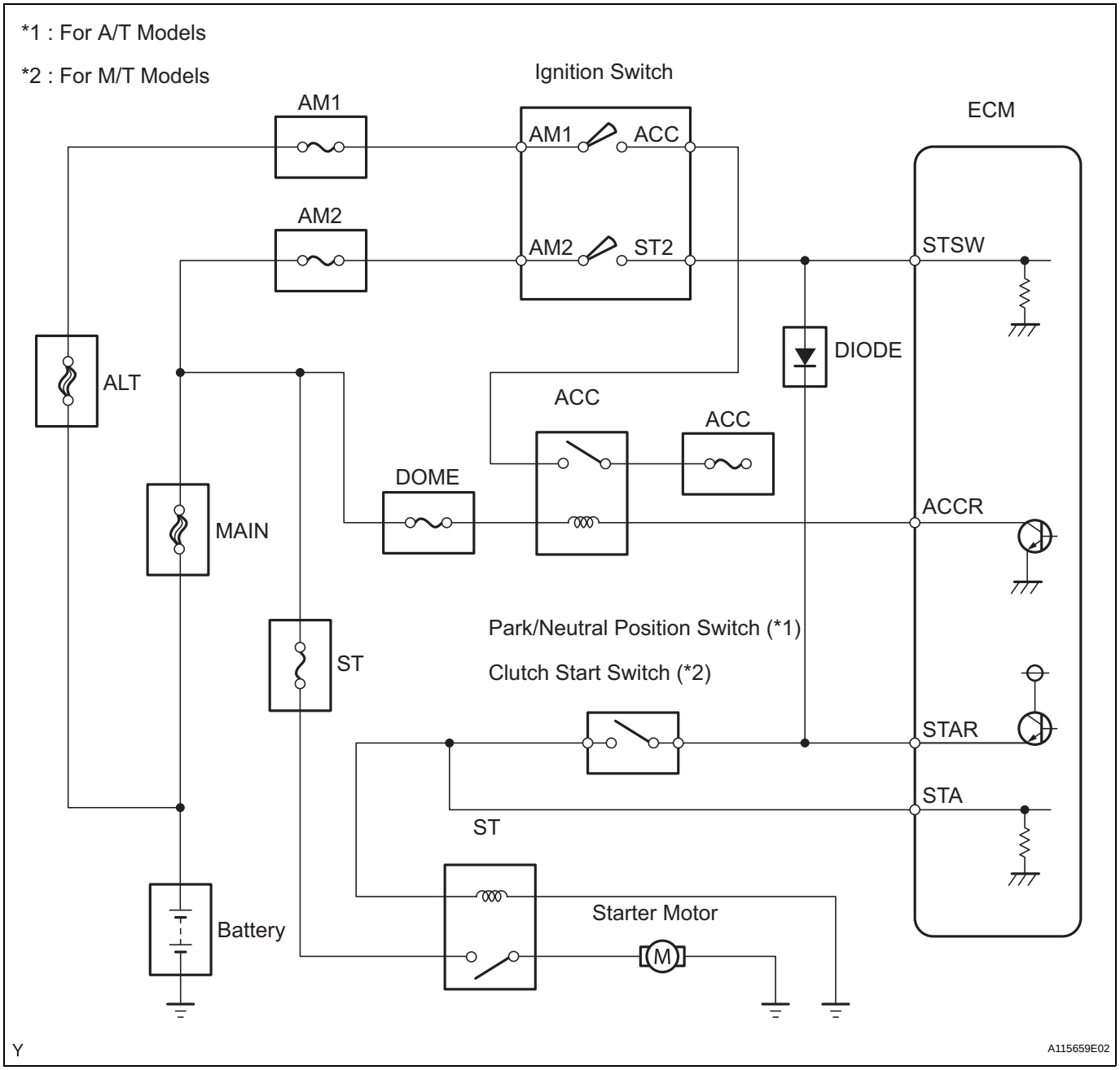

INSPECTION PROCEDURE

HINT:

- The following troubleshooting flowchart is based on the premise that the engine is cranked normally. If the engine will not crank, proceed to the problem symptoms table (See page ES-24).
- Read freeze frame data using an intelligent tester. Freeze frame data record the engine condition when malfunctions are detected. When troubleshooting, freeze frame data can help determine if the vehicle was moving or stationary, if the engine was warmed up or not, if the air-fuel ratio was lean or rich, and other data, from the time the malfunction occurred.

1	READ VALUE USING INTELLIGENT TESTER (STARTER SIGNAL)

(a) Connect an intelligent tester to the DLC3.
(b) Turn the ignition switch to ON and turn the tester ON.

(c) Select the following menu items: DIAGNOSIS / ENHANCED OBD II / DATA LIST / PRIMARY / STARTER SIG.

(d) Check the value displayed on the tester when the ignition switch is turned to the ON and START positions.

OK

Ignition Switch Positions	STARTER SIG
ON	OFF
START	ON

OK → **CHECK FOR INTERMITTENT PROBLEMS**

ES

NG

2 INSPECT PARK / NEUTRAL POSITION SWITCH (A/T) OR CLUTCH SWITCH ASSEMBLY (M/T)

Component Side:

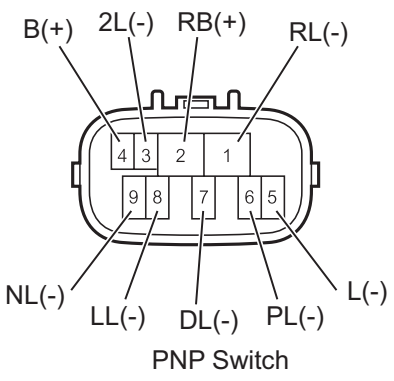

A107908E01

(a) Inspect the Park/Neutral Position (PNP) switch (for A/T models).
  (1) Disconnect the C27 PNP switch connector.
  (2) Check the resistance when the transmission gear selector lever is moved to each position.
  Standard resistance

Gear Selector Lever Positions	Tester Connections	Specified Conditions
P	2 - 6, 4 - 5	Below 1 Ω
R	1 - 2	
N	2 - 9, 4 - 5	
D	2 - 7	
2	2 - 3	
L	2 - 8	

  (3) Reconnect the PNP switch connector.

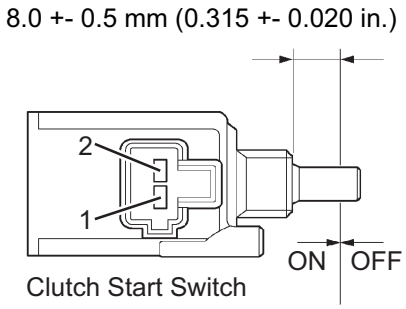

A082259E15

(b) Inspect the clutch start switch (for M/T models).
  (1) Disconnect the A16 clutch start switch connector.
  (2) Check the resistance when the clutch start switch is ON and OFF.
  Standard resistance

Switch Positions	Tester Connections	Specified Conditions
ON (pushed)	1 - 2	Below 1 Ω
OFF (free)	1 - 2	10 kΩ or higher

  (3) Reconnect the clutch start switch connector.

OK → **Go to step 5**

NG

3 REPLACE PARK / NEUTRAL POSITION SWITCH (A/T) OR CLUTCH SWITCH ASSEMBLY (M/T)

NEXT

4 READ VALUE USING INTELLIGENT TESTER (STARTER SIGNAL)

(a) Connect the intelligent tester to the DLC3.
(b) Turn the ignition switch to ON and turn the tester ON.
(c) Select the following menu items: DIAGNOSIS / ENHANCED OBD II / DATA LIST / PRIMARY / STARTER SIG.
(d) Check the value displayed on the tester when the ignition switch is turned to the ON and START positions.

OK

Ignition Switch Positions	STARTER SIG
ON	OFF
START	ON

ES

OK → **SYSTEM OK**

NG

5 INSPECT IGNITION OR STARTER SWITCH ASSEMBLY

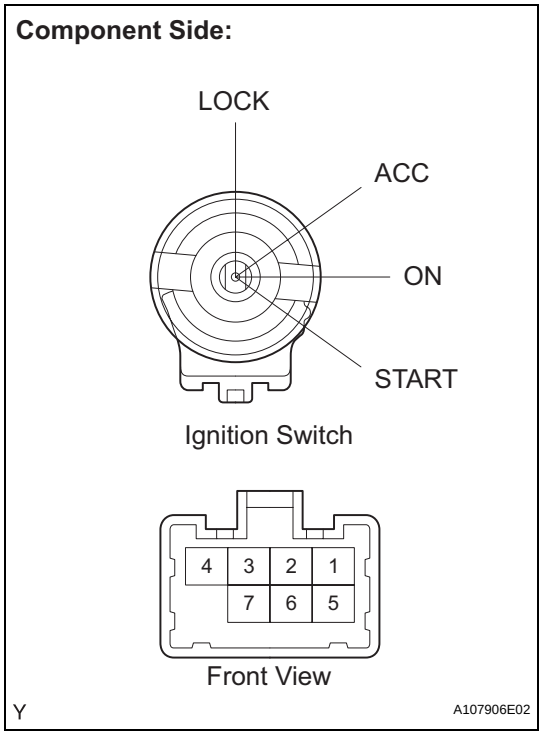

(a) Disconnect the D8 ignition switch connector.
(b) Check the resistance.
Standard resistance

Ignition Switch Positions	Tester Connectinos	Specified Conditions
LOCK	All Terminals	10 kΩ or higher
ACC	2-4	Below 1 Ω
ON	1-4, 1-6, 2-4, 3-4, 5-6	
START	1-4, 3-4, 5-6, 5-7	

(c) Reconnect the ignition switch connector.

OK → **Go to step 7**

NG

6 REPLACE IGNITION OR STARTER SWITCH ASSEMBLY

NEXT

7	READ VALUE USING INTELLIGENT TESTER (STARTER SIGNAL)

(a) Connect the intelligent tester to the DLC3.
(b) Turn the ignition switch to ON and turn the tester ON.
(c) Select the following menu items: DIAGNOSIS / ENHANCED OBD II / DATA LIST / PRIMARY / STARTER SIG.
(d) Check the value displayed on the tester when the ignition switch is turned to the ON and START positions.

OK

ES

Ignition Switch Positions	STARTER SIG
ON	OFF
START	ON

OK → **SYSTEM OK**

NG ↓

8	REPAIR OR REPLACE HARNESS OR CONNECTOR (PNP SWITCH OR CLUTCH START SWITCH - STA TERMINAL OF ECM)

NEXT ↓

9	CHECK WHETHER DTC OUTPUT RECURS

(a) Connect the intelligent tester to the DLC3.
(b) Turn the ignition switch to ON.
(c) Turn the tester ON.
(d) Clear DTCs (See page ES-34).
(e) Drive the vehicle at more than 12.43 mph (20 km/h) for over 20 seconds.
(f) Select the following menu items: DIAGNOSIS / ENHANCED OBD II / DTC INFO / CURRENT CODES.
(g) Read DTCs.

Result

Display (DTC Output)	Proceed To
P0617	A
No DTC	B

B → **SYSTEM OK**

A ↓

REPLACE ECM

DTC	P0630	VIN not Programmed or Mismatch - ECM / PCM

DESCRIPTION

DTC P0630 is set when the Vehicle Identification Number (VIN) is not stored in the Engine Control Module (ECM) or the input VIN is incorrect. Input the VIN with the intelligent tester.

DTC No.	DTC Detection Conditions	Trouble Areas
P0630	• VIN not stored in ECM • Input VIN incorrect	ECM

MONITOR STRATEGY

Related DTCs	P0630: VIN not programmed
Required Sensors/Components (Main)	ECM
Required Sensors/Components (Related)	-
Frequency of Operation	Continuous
Duration	0.325 seconds
MIL Operation	Immediate
Sequence of Operation	None

ES

TYPICAL ENABLING CONDITIONS

Battery voltage	8 V or more
Ignition switch	ON
Starter	OFF

TYPICAL MALFUNCTION THRESHOLDS

VIN code	Not programmed

COMPONENT OPERATING RANGE

VIN code	Programmed

INSPECTION PROCEDURE

1	READ CURRENT DTC

(a) Connect an intelligent tester to the DLC3.
(b) Turn the ignition switch to ON and turn the tester ON.
(c) Select the following menu items: DIAGNOSIS / ENHANCED OBD II / DTC INFO / CURRENT CODES.
(d) Read DTCs.

Result

Display (DTC Output)	Proceed To
P0630	**A**
P0630 and other DTCs	**B**

If any DTCs other than P0630 are output, troubleshoot those DTCs first.

NOTICE:
If P0630 is set, the VIN must be input to the ECM using the intelligent tester. However, all DTCs are cleared automatically by the tester when the VIN is input. If DTCs other than P0630 are set, check them first.

B → **GO TO DTC CHART**

A

2	**INPUT VIN WITH INTELLIGENT TESTER**

Refer to the REGISTRATION (See page ES-14).

NEXT

END

DTC	P0724	Brake Switch "B" Circuit High

DESCRIPTION

The purpose of this circuit is to prevent the engine from stalling when brakes are suddenly applied while driving in lock-up condition.
When the brake pedal is depressed, this switch sends a signal to the ECM. Then the ECM cancels the operation of the lock-up clutch while braking is in progress.

DTC No.	DTC Detection Conditions	Trouble Areas
P0724	Stop light switch remains ON even when vehicle repeats 5 cycles of STOP (less than 1.86 mph (3 km/h)) and GO (18.65 mph (30 km/h)or more) (2 trip detection logic)	• Short in stop light switch signal circuit • Stop light switch • ECM

MONITOR DESCRIPTION

This DTC indicates that the stop light switch remains ON. When the stop light switch remains ON during "stop and go" driving, the ECM interprets this as a fault in the stop light switch and the MIL comes on and the ECM stores the DTC. The vehicle must stop (less than 1.86 mph (3 km/h)) and go (18.65 mph (30 km/h) or more) 5 times during 2 driving cycles, in order to detect a malfunction.

MONITOR STRATEGY

Related DTCs	P0724: Stop light switch/Range check/Rationality
Required sensors/Components (Main)	Stop light switch
Required sensors/Components (Related)	Speed sensor
Frequency of Operation	Continuous
Duration	5 times
MIL Operation	2 driving cycles
Sequence of Operation	None

TYPICAL ENABLING CONDITIONS

The stop light switch remains ON during GO and STOP 5 times.
GO and STOP are defined as follows;

Monitor runs whenever following DTCs not present	None
GO: Vehicle speed	18.65 mph (30 km/h) or more
STOP: Vehicle speed	Less than 1.86 mph (3 km/h)

TYPICAL MALFUNCTION THRESHOLDS

Stop light switch status	Stuck ON

WIRING DIAGRAM

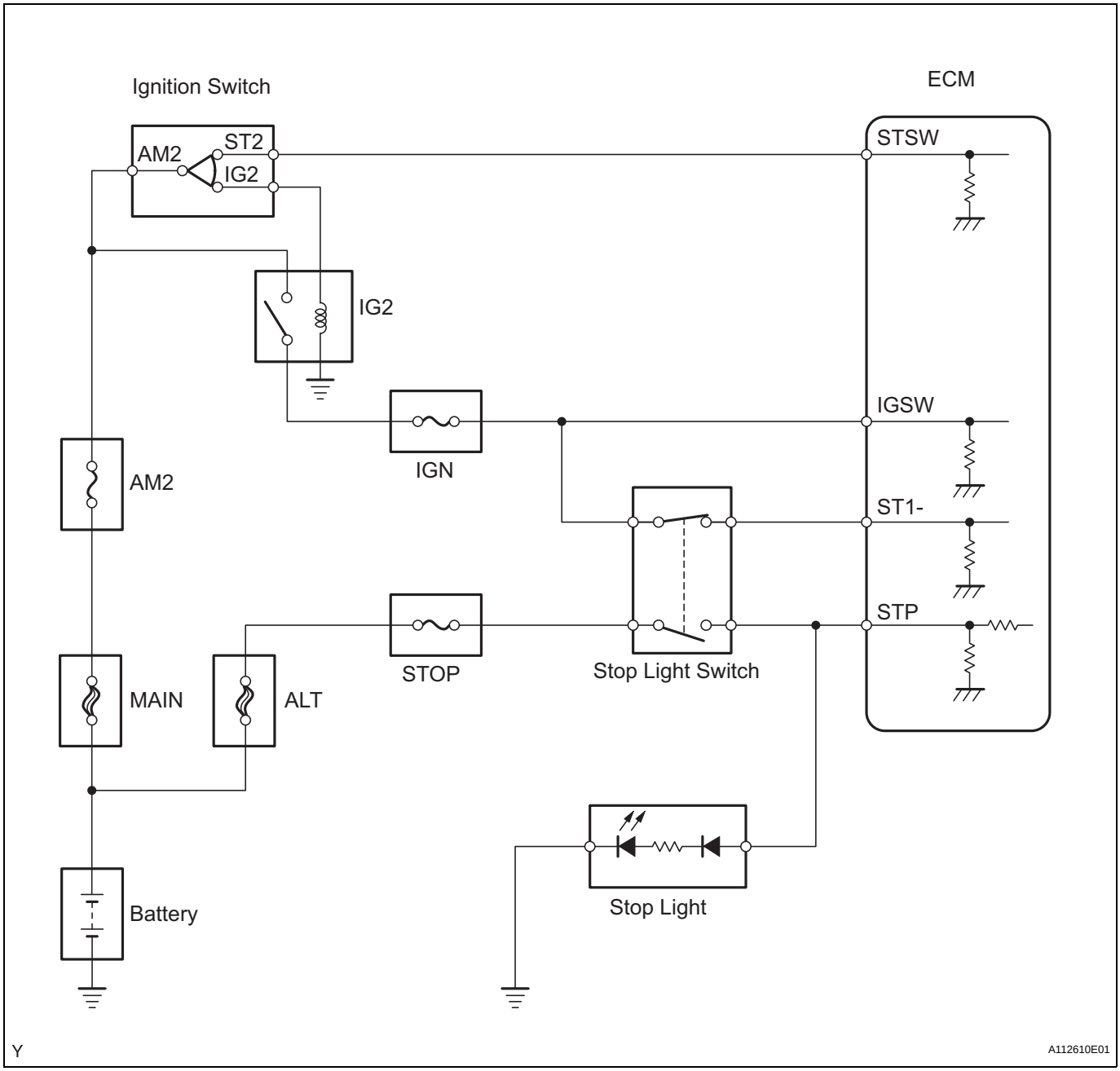

INSPECTION PROCEDURE

HINT:
Read freeze frame data using an intelligent tester. Freeze frame data record the engine condition when malfunctions are detected. When troubleshooting, freeze frame data can help determine if the vehicle was moving or stationary, if the engine was warmed up or not, if the air-fuel ratio was lean or rich, and other data, from the time the malfunction occurred.

1	READ VALUE USING INTELLIGENT TESTER (STOP LIGHT SW)

(a) Connect an intelligent tester to the DLC3.
(b) Turn the ignition switch to ON and turn the tester ON.

(c) Select the following menu items: DIAGNOSIS / ENHANCED OBD II / DATA LIST / PRIMARY / STOP LIGHT SW.
(d) Read the values displayed on the tester.

OK

Item	Measurement Item: Range (display)	Normal Condition
STOP LIGHT SW	Stop light switch status: ON or OFF	• ON: Brake pedal is depressed • OFF: Brake pedal is released

OK → **CHECK FOR INTERMITTENT PROBLEMS**

NG

2 INSPECT STOP LIGHT SWITCH ASSEMBLY (See page ES-227)

NG → **REPLACE STOP LIGHT SWITCH ASSEMBLY**

OK

3 CHECK HARNESS AND CONNECTOR (STOP LIGHT SWITCH - ECM)

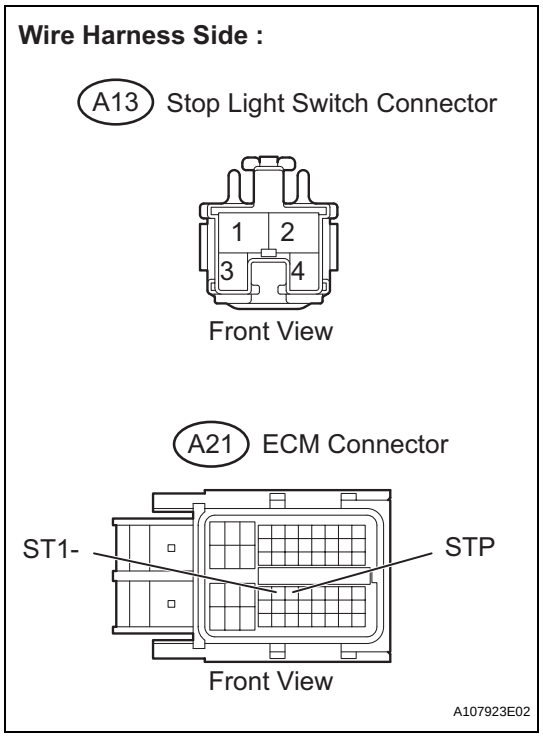

(a) Disconnect the A21 ECM connector.
(b) Disconnect the A13 stop light switch connector.
(c) Check the resistance.

Standard resistance (Check for open)

Tester Connections	Specified Conditions
STP (A21-36) - Stop light switch (A13-1)	Below 1Ω
ST1- (A21-35) - Stop light switch (A13-4)	

Standard resistance (Check for short)

Tester Connections	Specified Conditions
STP (A21-36) or Stop light switch (A13-1) - Body ground	10 kΩ or higher
ST1- (A21-35) or Stop light switch (A13-4) - Body ground	

(d) Reconnect the ECM connector.
(e) Reconnect the stop light switch connector.

NG → **REPAIR OR REPLACE HARNESS OR CONNECTOR**

OK

REPLACE ECM

DTC	P2102	Throttle Actuator Control Motor Circuit Low

DTC	P2103	Throttle Actuator Control Motor Circuit High

DESCRIPTION

The throttle actuator is operated by the ECM and opens and closes the throttle valve using gears.
The opening angle of the throttle valve is detected by the Throttle Position (TP) sensor, which is mounted on the throttle body. The TP sensor provides feedback to the ECM. This feedback allows the ECM to appropriately control the throttle actuator and monitor the throttle opening angle as the ECM responds to driver inputs.
HINT:
This ETCS (Electronic Throttle Control System) does not use a throttle cable.

ES

DTC No.	DTC Detection Conditions	Trouble Areas
P2102	Conditions (a) and (b) continue for 2.0 seconds (1 trip detection logic): (a) Throttle actuator duty ratio 80 % or more (b) Throttle actuator current 0.5 A or less	• Open in throttle actuator circuit • Throttle actuator • ECM
P2103	Either of following conditions met (1 trip detection logic): • Throttle actuator current 10 A or more for 0.1 seconds • Throttle actuator current 7 A or more for 0.6 seconds	• Short in throttle actuator circuit • Throttle actuator • Throttle valve • Throttle body assembly • ECM

MONITOR DESCRIPTION

The ECM monitors the electrical current through the electronic actuator, and detects malfunctions and open circuits in the throttle actuator based on this value. If the current is outside the standard range, the ECM determines that there is a malfunction in the throttle actuator. In addition, if the throttle valve does not function properly (for example, stuck on), the ECM determines that there is a malfunction. The ECM then illuminates the MIL and sets a DTC.
Example:
When the electrical current is more than 10 A, or less than 0.5 A and the throttle actuator duty ratio exceeds 80 %, the ECM interprets this as the current being outside the standard range, and illuminates the MIL and sets a DTC.
If the malfunction is not repaired successfully, a DTC is set when the engine is quickly revved to a high rpm several times after the engine has idled for 5 seconds after engine start.

MONITOR STRATEGY

Related DTCs	P2102: Throttle actuator current (low current) P2103: Throttle actuator current (high current)
Required Sensors/Components (Main)	Throttle actuator (throttle body)
Required Sensors/Components (Related)	None
Frequency of Operation	Continuous
Duration	2 seconds: P2102 0.1 seconds or 0.6 seconds: P2103
MIL Operation	Immediate
Sequence of Operation	None

TYPICAL ENABLING CONDITIONS

Monitor runs whenever following DTCs not present	None

P2102:

Throttle actuator	Activated

Duty-cycle ratio to open throttle actuator	80 % or more
Throttle actuator power supply	8 V or more

P2103:

Throttle actuator	Activated
Throttle actuator power supply	8 V or more
Battery voltage	8 V or more
Starter	OFF

TYPICAL MALFUNCTION THRESHOLDS

P2102:

Throttle actuator current	Less than 0.5 A

P2103:

Hybrid IC current limiter port	Fail

FAIL-SAFE

When either of these DTCs, or other DTCs relating to ETCS (Electronic Throttle Control System) malfunctions, are set, the ECM enters fail-safe mode. During fail-safe mode, the ECM cuts the current to the throttle actuator off, and the throttle valve is returned to a 6° throttle angle by the return spring. The ECM then adjusts the engine output by controlling the fuel injection (intermittent fuel-cut) and ignition timing, in accordance with the accelerator pedal opening angle, to allow the vehicle to continue at a minimal speed. If the accelerator pedal is depressed firmly and gently, the vehicle can be driven slowly. Fail-safe mode continues until a pass condition is detected, and the ignition switch is then turned to OFF.

WIRING DIAGRAM

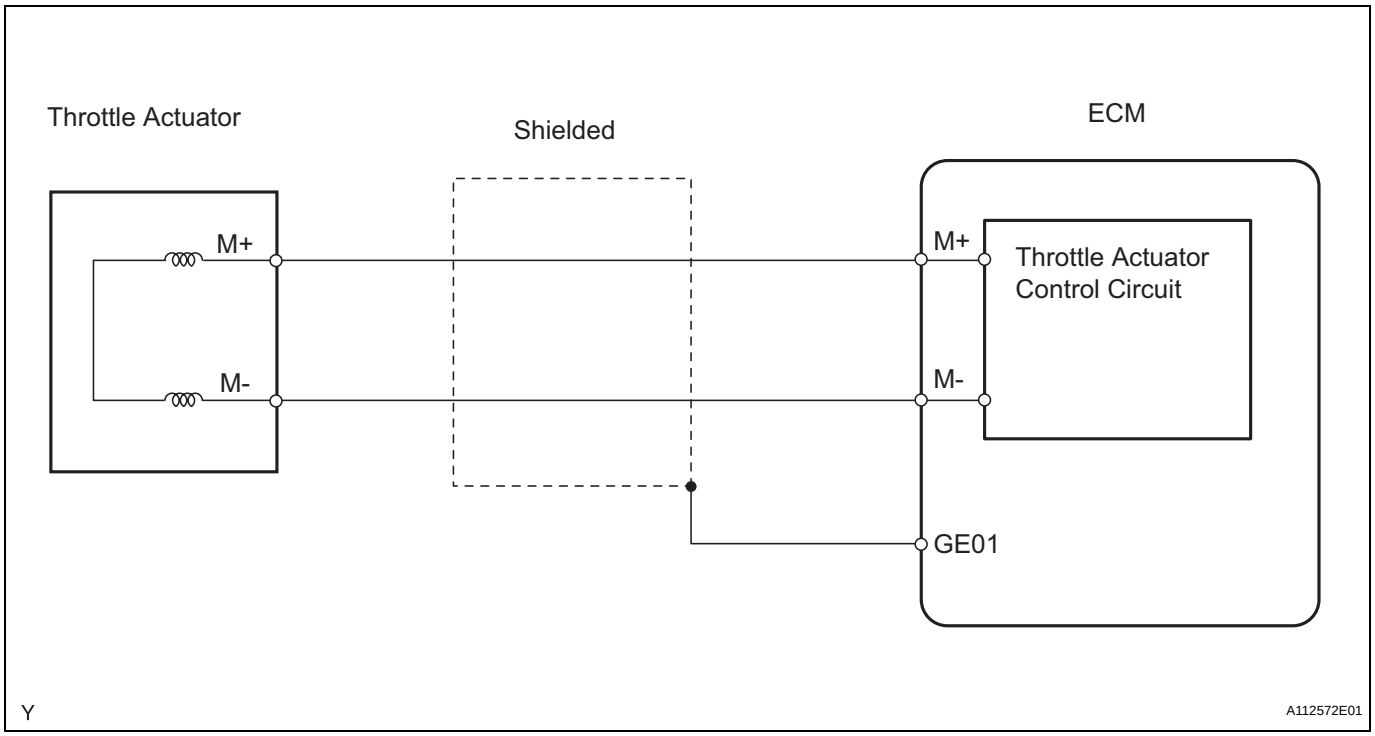

INSPECTION PROCEDURE

HINT:

- Read freeze frame data using an intelligent tester. Freeze frame data record the engine condition when malfunctions are detected. When troubleshooting, freeze frame data can help determine if the vehicle was moving or stationary, if the engine was warmed up or not, if the air-fuel ratio was lean or rich, and other data, from the time the malfunction occurred.
- The throttle actuator current (THROTTLE MOT) and the throttle actuator duty ratio (THROTTLE OPN / THROTTLE CLS) can be read using the intelligent tester. However the ECM shuts off the throttle actuator current when the ETCS malfunctions.

1 INSPECT THROTTLE BODY (RESISTANCE OF THROTTLE ACTUATOR)

ES

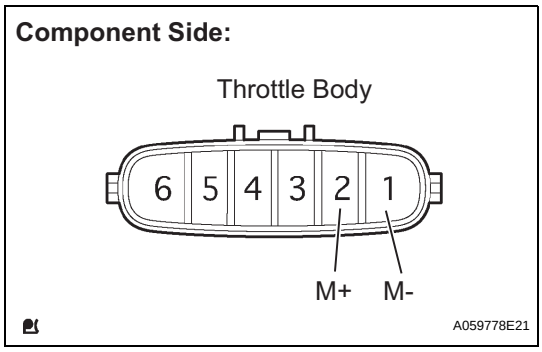

(a) Disconnect the C17 throttle body connector.
(b) Measure the resistance of the throttle actuator.
Standard resistance

Tester Connections	Specified Conditions
M+ (2) - M- (1)	0.3 to 100 Ω at 20°C (68°F)

(c) Reconnect the throttle body connector.

NG → **REPLACE THROTTLE BODY ASSEMBLY**

OK

2 CHECK HARNESS AND CONNECTOR (THROTTLE ACTUATOR - ECM)

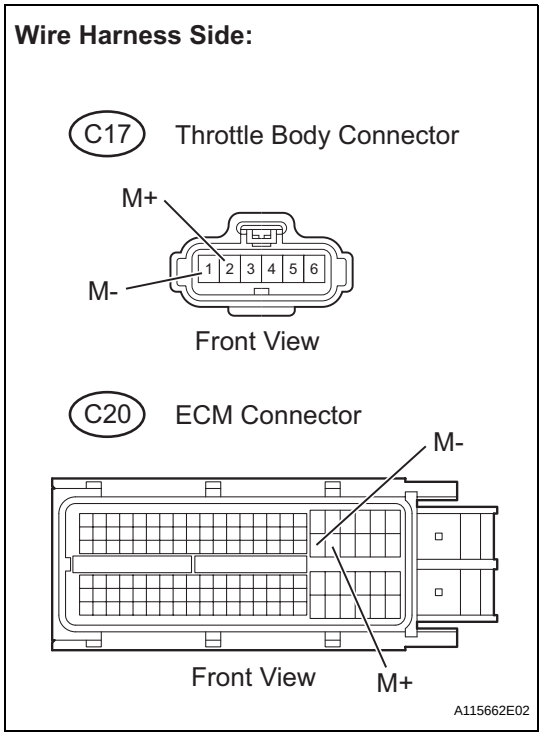

(a) Disconnect the C17 throttle body connector.
(b) Disconnect the C20 ECM connector.
(c) Check the resistance.
Standard resistance (Check for open)

Tester Connections	Specified Conditions
M+ (C17-2) - M+ (C20-42)	Below 1 Ω
M- (C17-1) - M- (C20-41)	

Standard resistance (Check for short)

Tester Connections	Specified Conditions
M+ (C17-2) or M+ (C20-42) - Body ground	10 kΩ or higher
M- (C17-1) or M- (C20-41) - Body ground	

(d) Reconnect the throttle body connector.
(e) Reconnect the ECM connector.

NG → **REPAIR OR REPLACE HARNESS OR CONNECTOR**

OK

3	INSPECT THROTTLE BODY ASSEMBLY

(a) Check for foreign objects between the throttle valve and the housing.
OK:
No foreign objects between throttle valve and housing.

NG → **REMOVE FOREIGN OBJECT AND CLEAN THROTTLE BODY**

OK

4	INSPECT THROTTLE VALVE

(a) Check if the throttle valve opens and closes smoothly.
OK:
Throttle valve opens and closes smoothly.

NG → **REPLACE THROTTLE BODY ASSEMBLY**

OK

REPLACE ECM

DTC	P2111	Throttle Actuator Control System - Stuck Open

DTC	P2112	Throttle Actuator Control System - Stuck Closed

DESCRIPTION

The throttle actuator is operated by the ECM, and opens and closes the throttle valve using gears. The opening angle of the throttle valve is detected by the Throttle Position (TP) sensor, which is mounted on the throttle body. The TP sensor provides feedback to the ECM in order that it can control the throttle actuator, and therefore the throttle valve, appropriately in response to driver inputs.

HINT:

ES

This ETCS (Electronic Throttle Control System) does not use a throttle cable.

DTC No.	DTC Detection Conditions	Trouble Areas
P2111	Throttle actuator does not close when signaled by ECM (1 trip detection logic)	• Throttle actuator • Throttle body assembly • Throttle valve
P2112	Throttle actuator does not open when signaled by ECM (1 trip detection logic)	• Throttle actuator • Throttle body assembly • Throttle valve

MONITOR DESCRIPTION

The ECM determines that there is a malfunction in the ETCS when the throttle valve remains at a fixed angle despite a high drive current from the ECM. The ECM illuminates the MIL and sets a DTC.

If the malfunction is not repaired successfully, a DTC is set when the accelerator pedal is fully depressed and released quickly (to fully open and close the throttle valve) after the engine is next started.

MONITOR STRATEGY

Related DTCs	P2111: Throttle actuator stuck open P2112: Throttle actuator stuck closed
Required Sensors/Components (Main)	Throttle actuator
Required Sensors/Components (Related)	-
Frequency of Operation	Continuous
Duration	0.5 seconds
MIL Operation	Immediate
Sequence of Operation	None

TYPICAL ENABLING CONDITIONS

All:

Monitor runs whenever following DTCs not present	None

P2111 (Throttle actuator stuck open):

All of following conditions met	-
Throttle actuator current	2 A or more
Duty cycle to close throttle	80 % or more

P2112 (Throttle actuator stuck closed):

All of following conditions met	-
Throttle actuator current	2 A or more
Duty cycle to open throttle	80 % or more

TYPICAL MALFUNCTION THRESHOLDS

P2111 (Throttle actuator stuck open):

TP sensor voltage change	No change

P2112 (Throttle actuator stuck closed):

TP sensor voltage change	No change

FAIL-SAFE

When either of these DTCs, or other DTCs relating to ETCS (Electronic Throttle Control System) malfunctions, are set, the ECM enters fail-safe mode. During fail-safe mode, the ECM cuts the current to the throttle actuator off, and the throttle valve is returned to a 6° throttle angle by the return spring. The ECM then adjusts the engine output by controlling the fuel injection (intermittent fuel-cut) and ignition timing, in accordance with the accelerator pedal opening angle, to allow the vehicle to continue at a minimal speed. If the accelerator pedal is depressed firmly and gently, the vehicle can be driven slowly. Fail-safe mode continues until a pass condition is detected, and the ignition switch is then turned to OFF.

WIRING DIAGRAM

Refer to DTC P2102 (See page ES-250).

INSPECTION PROCEDURE

HINT:
Read freeze frame data using an intelligent tester. Freeze frame data record the engine condition when malfunctions are detected. When troubleshooting, freeze frame data can help determine if the vehicle was moving or stationary, if the engine was warmed up or not, if the air-fuel ratio was lean or rich, and other data, from the time the malfunction occurred.

1	CHECK ANY OTHER DTCS OUTPUT (IN ADDITION TO DTC P2111 OR P2112)

(a) Connect an intelligent tester to the DLC3.
(b) Turn the ignition switch to ON.
(c) Turn the tester ON.
(d) Select the following menu items: DIAGNOSIS / ENHANCED OBD II / DTC INFO / CURRENT CODES.
(e) Read DTCs.

Result

Display (DTC Output)	Proceed To
P2111 or P2112	A
P2111 or P2112 and other DTCs	B

HINT:
If any DTCs other than P2111 or P2112 are output, troubleshoot those DTCs first.

B → **GO TO DTC CHART**

A

2	INSPECT THROTTLE BODY ASSEMBLY (VISUALLY CHECK THROTTLE VALVE)

(a) Check for contamination between the throttle valve and the housing. If necessary, clean the throttle body. And check that the throttle valve moves smoothly.

OK:
Throttle valve is not contaminated with foreign objects and moves smoothly.

NG → **REPLACE THROTTLE BODY ASSEMBLY**

OK

3	CHECK WHETHER DTC OUTPUT RECURS (DTC P2111 OR P2112)

(a) Connect the intelligent tester to the DLC3.
(b) Turn the ignition switch to ON.
(c) Turn the tester ON.
(d) Clear DTCs (See page ES-34).
(e) Start the engine, and fully depress and release the accelerator pedal quickly (to fully open and close the throttle valve).
(f) Select the following menu items: DIAGNOSIS / ENHANCED OBD II / DTC INFO / CURRENT CODES.
(g) Read DTCs.

Result

Display (DTC Output)	Proceed To
No DTC	A
P2111 or P2112	B

B → **REPLACE ECM**

A

CHECK FOR INTERMITTENT PROBLEMS

DTC	P2118	Throttle Actuator Control Motor Current Range / Performance

DESCRIPTION

The ETCS (Electronic Throttle Control System) has a dedicated power supply circuit. The voltage (+BM) is monitored and when it is low (less than 4 V), the ECM determines that there is a malfunction in the ETCS and cuts off the current to the throttle actuator.
When the voltage becomes unstable, the ETCS itself becomes unstable. For this reason, when the voltage is low, the current to the throttle actuator is cut. If repairs are made and the system returns to normal, turn the ignition switch to OFF. The ECM then allows the current to flow to the throttle actuator so that it can be restarted.
HINT:
The ETCS does not use a throttle cable.

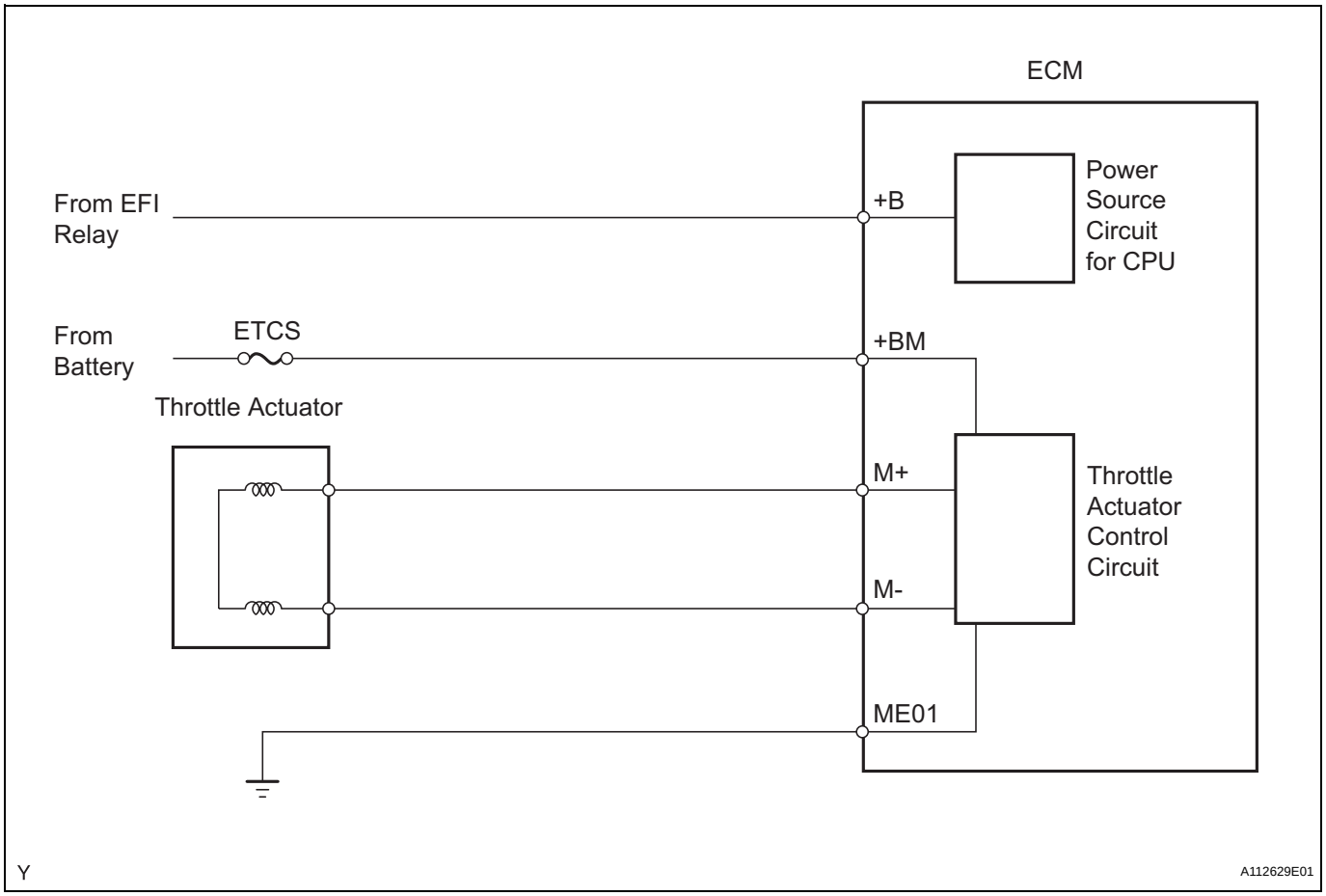

DTC No.	DTC Detection Conditions	Trouble Areas
P2118	Open in ETCS power source (+BM) circuit (1 trip detection logic)	• Open in ETCS power source circuit • Battery • Battery terminals • ETCS fuse • ECM

MONITOR DESCRIPTION

The ECM monitors the battery supply voltage applied to the throttle actuator.
When the power supply voltage (+BM) drops below 4 V for 0.8 seconds or more, the ECM interprets this as an open in the power supply circuit (+BM). The ECM illuminates the MIL and sets the DTC.
If the malfunction is not repaired successfully, the DTC is set 5 seconds after the engine is next started.

MONITOR STRATEGY

Related DTCs	P2118: Throttle actuator power supply
Required Sensors/Components (Main)	Throttle actuator, throttle valve, ETCS fuse
Required Sensors/Components (Related)	None
Frequency of Operation	Continuous
Duration	0.8 seconds
MIL Operation	Immediate
Sequence of Operation	None

TYPICAL ENABLING CONDITIONS

Monitor runs whenever following DTCs not present	None
Battery voltage	8 V or more
Electronic throttle actuator power	ON

TYPICAL MALFUNCTION THRESHOLDS

Throttle actuator power supply voltage (+BM)	Less than 4 V

COMPONENT OPERATING RANGE

Throttle actuator power supply voltage (+BM)	11 to 14 V

FAIL-SAFE

When this DTC, or other DTCs relating to ETCS (Electronic Throttle Control System) malfunctions, are set, the ECM enters fail-safe mode. During fail-safe mode, the ECM cuts the current to the throttle actuator off, and the throttle valve is returned to a 6° throttle angle by the return spring. The ECM then adjusts the engine output by controlling the fuel injection (intermittent fuel-cut) and ignition timing, in accordance with the accelerator pedal opening angle, to allow the vehicle to continue at a minimal speed. If the accelerator pedal is depressed firmly and gently, the vehicle can be driven slowly.
Fail-safe mode continues until a pass condition is detected, and the ignition switch is then turned to OFF.

WIRING DIAGRAM

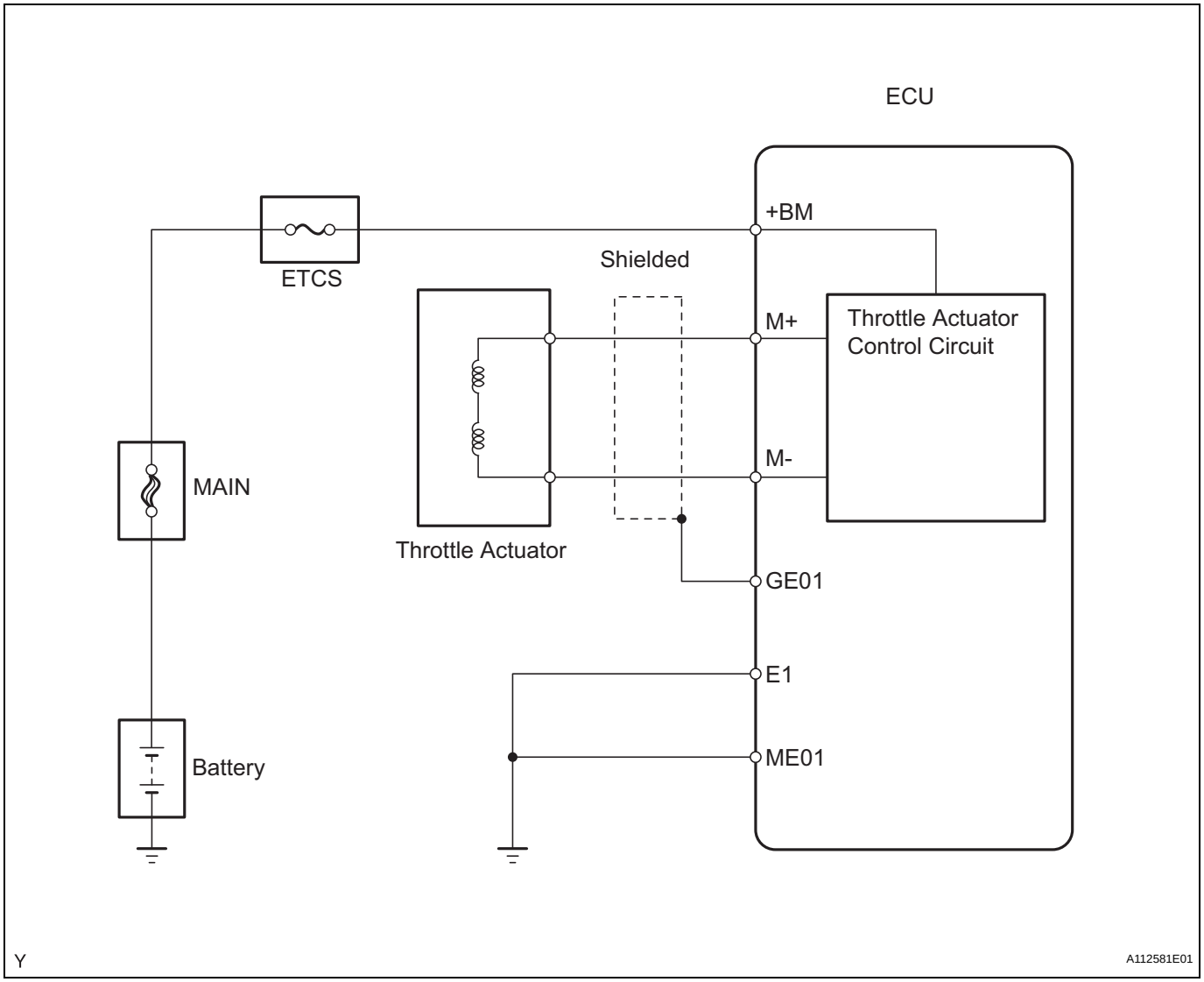

INSPECTION PROCEDURE

HINT:
Read freeze frame data using an intelligent tester. Freeze frame data record the engine condition when malfunctions are detected. When troubleshooting, freeze frame data can help determine if the vehicle was moving or stationary, if the engine was warmed up or not, if the air-fuel ratio was lean or rich, and other data, from the time the malfunction occurred.

1	READ VALUE USING INTELLIGENT TESTER (+BM VOLTAGE)

(a) Connect an intelligent tester to the DLC3.
(b) Turn the ignition switch to ON.
(c) Turn the tester ON.
(d) Select the following menu items: DIAGNOSIS / ENHANCED OBD II / DATA LIST / +BM VOLTAGE.
(e) Read the value displayed on the tester.
Standard voltage:
11 to 14 V

ES

OK → **Go to step 5**

NG

2	CHECK FUSE (ETCS FUSE)

Engine Room Relay Block:

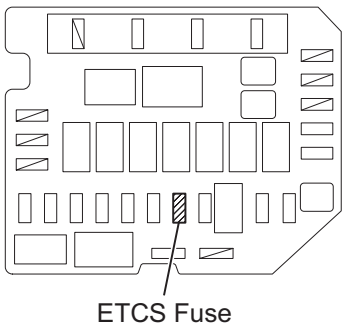

A112591E01

(a) Remove the ETCS fuse from the engine room relay block.
(b) Check the ETCS fuse resistance.
Standard resistance:
Below 1 Ω
(c) Reinstall the ETCS fuse.

NG → **CHECK FOR SHORTS IN ALL HARNESSES AND CONNECTORS CONNECTED TO FUSE AND REPLACE FUSE**

OK

3	CHECK HARNESS AND CONNECTOR (ECM - ETCS FUSE, ETCS FUSE - BATTERY)

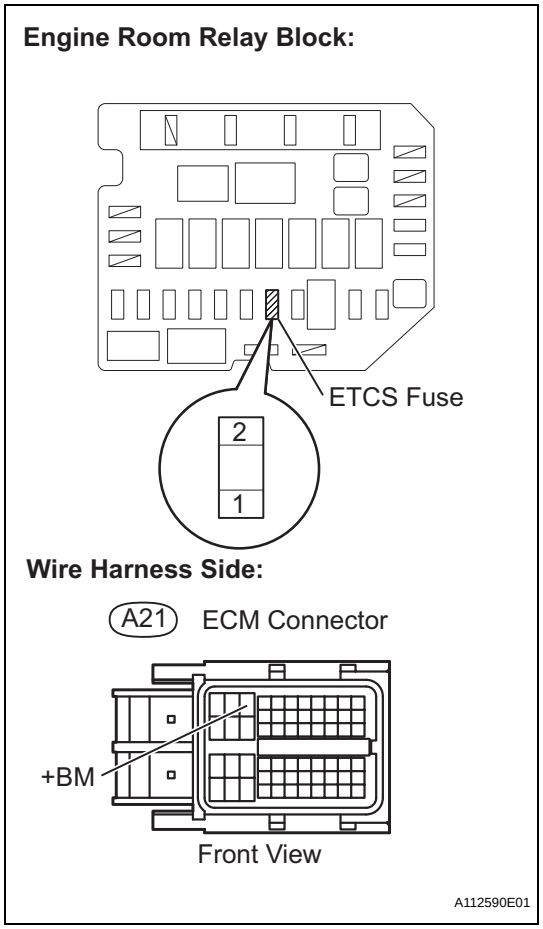

(a) Check the harness and connector between the ETCS fuse and ECM.
  (1) Remove the ETCS fuse from the engine room relay block.
  (2) Disconnect the A21 ECM connector.
  (3) Check the resistance.

Standard resistance (Check for open)

Tester Connections	Specified Conditions
ETCS fuse (2) - +BM (A21-3)	Below 1 Ω

Standard resistance (Check for short)

Tester Connections	Specified Conditions
ETCS fuse (2) or +BM (A21-3) - Body ground	10 kΩ or higher

  (4) Reinstall the ETCS fuse.
  (5) Reconnect the ECM connector.

(b) Check the harness and connector between the ETCS fuse and positive battery cable.
  (1) Remove the ETCS fuse from the engine room relay block.
  (2) Disconnect the positive battery cable.
  (3) Check the resistance.

Standard resistance (Check for open)

Tester Connections	Specified Conditions
Positive battery cable - ETCS fuse (1)	Below 1 Ω

Standard resistance (Check for short)

Tester Connections	Specified Conditions
Positive battery cable or ETCS fuse (1) - Body ground	10 kΩ or higher

  (4) Reinstall the ETCS fuse.
  (5) Reconnect the positive battery cable.

NG → **REPAIR OR REPLACE HARNESS OR CONNECTOR**

OK

ES

ES

4	INSPECT ECM (+BM VOLTAGE)

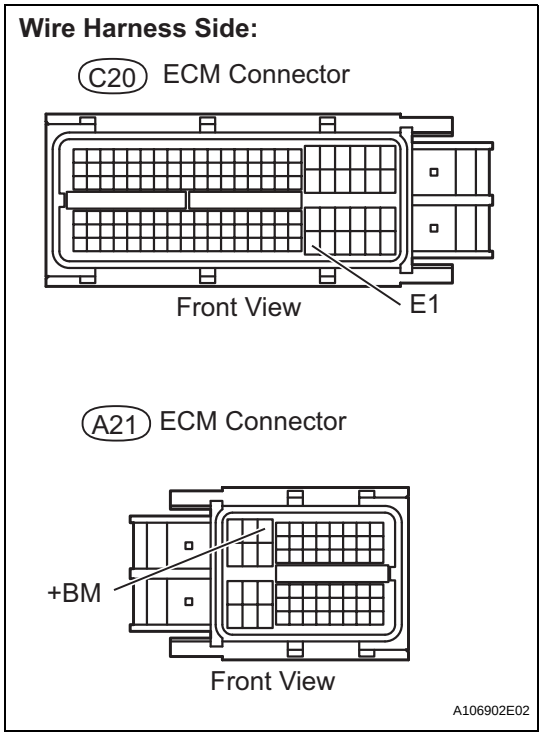

(a) Disconnect the A21 and C20 ECM connectors.
(b) Measure the voltage between the terminals of the A21 and C20 ECM connectors.
Standard voltage

Tester Connections	Specified Conditions
+BM (A21-3) - E1 (C20-104)	11 to 14 V

(c) Reconnect the ECM connectors.

NG → **REPAIR OR REPLACE HARNESS OR CONNECTOR (TERMINAL E1 - BODY GROUND)**

OK

REPLACE ECM

5	INSPECT BATTERY

(a) Check that the battery is not depleted.
OK:
Battery is not depleted

NG → **REPLACE BATTERY**

OK

6	CHECK BATTERY TERMINAL

(a) Check that the battery terminals and ECM ground are not loose or corroded.
OK:
Battery terminals and ECM ground are not loose or corroded

NG → **REPAIR OR REPLACE BATTERY TERMINAL**

OK

CHECK FOR INTERMITTENT PROBLEMS

DTC	P2119	Throttle Actuator Control Throttle Body Range / Performance

DESCRIPTION

The Electronic Throttle Control System (ETCS) is composed of the throttle actuator, Throttle Position (TP) sensor, Accelerator Pedal Position (APP) sensor, and ECM. The ECM operates the throttle actuator to regulate the throttle valve in response to driver inputs. The TP sensor detects the opening angle of the throttle valve, and provides the ECM with feedback so that the throttle valve can be appropriately controlled by the ECM.

DTC No.	DTC Detection Conditions	Trouble Areas
P2119	Throttle valve opening angle continues to vary greatly from target opening angle (1 trip detection logic)	• ETCS • ECM

MONITOR DESCRIPTION

The ECM determines the actual opening angle of the throttle valve from the TP sensor signal. The actual opening angle is compared to the target opening angle commanded by the ECM. If the difference between these two values is outside the standard range, the ECM interprets this as a malfunction in the ETCS. The ECM then illuminates the MIL and sets the DTC.
If the malfunction is not repaired successfully, the DTC is set when the accelerator pedal is quickly released (to close the throttle valve) after the engine speed reaches 5,000 rpm by the accelerator pedal being fully depressed (fully open the throttle valve).

MONITOR STRATEGY

Related DTCs	P2119: ETCS malfunction
Required Sensors/Components (Main)	Throttle actuator
Required Sensors/Components (Related)	-
Frequency of Operation	Continuous
Duration	Within 1 second
MIL Operation	Immediate
Sequence of Operation	None

TYPICAL ENABLING CONDITIONS

Monitor runs whenever following DTCs not present	None

TYPICAL MALFUNCTION THRESHOLDS

Either of following conditions A or B met	-
A. Difference between commanded closed throttle position and current closed throttle position	0.3 V or more for 1 second
B. Difference between commanded open throttle position and current open throttle position	0.3 V or more for 0.6 seconds

FAIL-SAFE

When this DTC, or other DTCs relating to ETCS (Electronic Throttle Control System) malfunctions, are set, the ECM enters fail-safe mode. During fail-safe mode, the ECM cuts the current to the throttle actuator off, and the throttle valve is returned to a 6° throttle angle by the return spring. The ECM then adjusts the engine output by controlling the fuel injection (intermittent fuel-cut) and ignition timing, in accordance with the accelerator pedal opening angle, to allow the vehicle to continue at a minimal speed. If the accelerator pedal is depressed firmly and gently, the vehicle can be driven slowly.

Fail-safe mode continues until a pass condition is detected, and the ignition switch is then turned to OFF.

WIRING DIAGRAM

Refer to DTC P2102 (See page ES-250).

INSPECTION PROCEDURE

HINT:
Read freeze frame data using an intelligent tester. Freeze frame data record the engine condition when malfunctions are detected. When troubleshooting, freeze frame data can help determine if the vehicle was moving or stationary, if the engine was warmed up or not, if the air-fuel ratio was lean or rich, and other data, from the time the malfunction occurred.

1	CHECK ANY OTHER DTCS OUTPUT (IN ADDITION TO DTC P2119)

(a) Connect an intelligent tester to the DLC3.
(b) Turn the ignition switch to ON.
(c) Turn the tester ON.
(d) Select the following menu items: DIAGNOSIS / ENHANCED OBD II / DTC INFO / CURRENT CODES.
(e) Read DTCs.

Result

Display (DTC Output)	Proceed To
P2119	A
P2119 and other DTCs	B

HINT:
If any DTCs other than P2119 are output, troubleshoot those DTCs first.

B → GO TO DTC CHART

A

2	CHECK WHETHER DTC OUTPUT RECURS (DTC P2119)

(a) Connect the intelligent tester to the DLC3.
(b) Turn the ignition switch to ON.
(c) Turn the tester ON.
(d) Clear DTCs (See page ES-34).
(e) Allow the engine to idle for 15 seconds.
CAUTION:
Exercise extreme care and take precautions in steps (f) and (g) below. Failure to do so may result in the vehicle unexpectedly rolling away.
(f) Securely apply the parking brake and move the gear selector lever to the D position.
(g) While depressing the brake pedal securely, fully depress the accelerator pedal for 5 seconds.
(h) On the tester, select the following menu items: DIAGNOSIS / ENHANCED OBD II / DTC INFO / CURRENT CODES.

(i) Read DTCs.
HINT:
The output voltage of the throttle position sensor can be checked during step (g) using the intelligent tester. Variations in the output voltage indicate that the throttle actuator is in operation. To check the output voltage using the intelligent tester, select the following menu items: DIAGNOSIS / ENHANCED OBD II / DATA LIST / ETCS / THROTTLE POS #1.
OK:
No DTC output.

NG → **REPLACE THROTTLE BODY ASSEMBLY**

OK

CHECK FOR INTERMITTENT PROBLEMS

DTC	P2120	Throttle / Pedal Position Sensor / Switch "D" Circuit
DTC	P2122	Throttle / Pedal Position Sensor / Switch "D" Circuit Low Input
DTC	P2123	Throttle / Pedal Position Sensor / Switch "D" Circuit High Input
DTC	P2125	Throttle / Pedal Position Sensor / Switch "E" Circuit
DTC	P2127	Throttle / Pedal Position Sensor / Switch "E" Circuit Low Input
DTC	P2128	Throttle / Pedal Position Sensor / Switch "E" Circuit High Input
DTC	P2138	Throttle / Pedal Position Sensor / Switch "D" / "E" Voltage Correlation

HINT:
These DTCs relate to the Accelerator Pedal Position (APP) sensor.

DESCRIPTION

HINT:
This ETCS (Electronic Throttle Control System) does not use a throttle cable.
The APP sensor is mounted on the accelerator pedal bracket and has 2 sensor circuits: VPA (main) and VPA2 (sub). This sensor is a non-contact type, and uses Hall-effect elements, in order to yield accurate signals, even in extreme driving conditions, such as at high speeds as well as very low speeds. The voltage, which is applied to terminals VPA and VPA2 of the ECM, varies between 0 V and 5 V in proportion to the operating angle of the accelerator pedal (throttle valve). A signal from VPA indicates the actual accelerator pedal opening angle (throttle valve opening angle) and is used for engine control. A signal from VPA2 conveys the status of the VPA circuit and is used to check the APP sensor itself.
The ECM monitors the actual accelerator pedal opening angle (throttle valve opening angle) through the signals from VPA and VPA2, and controls the throttle actuator according to these signals.

ES

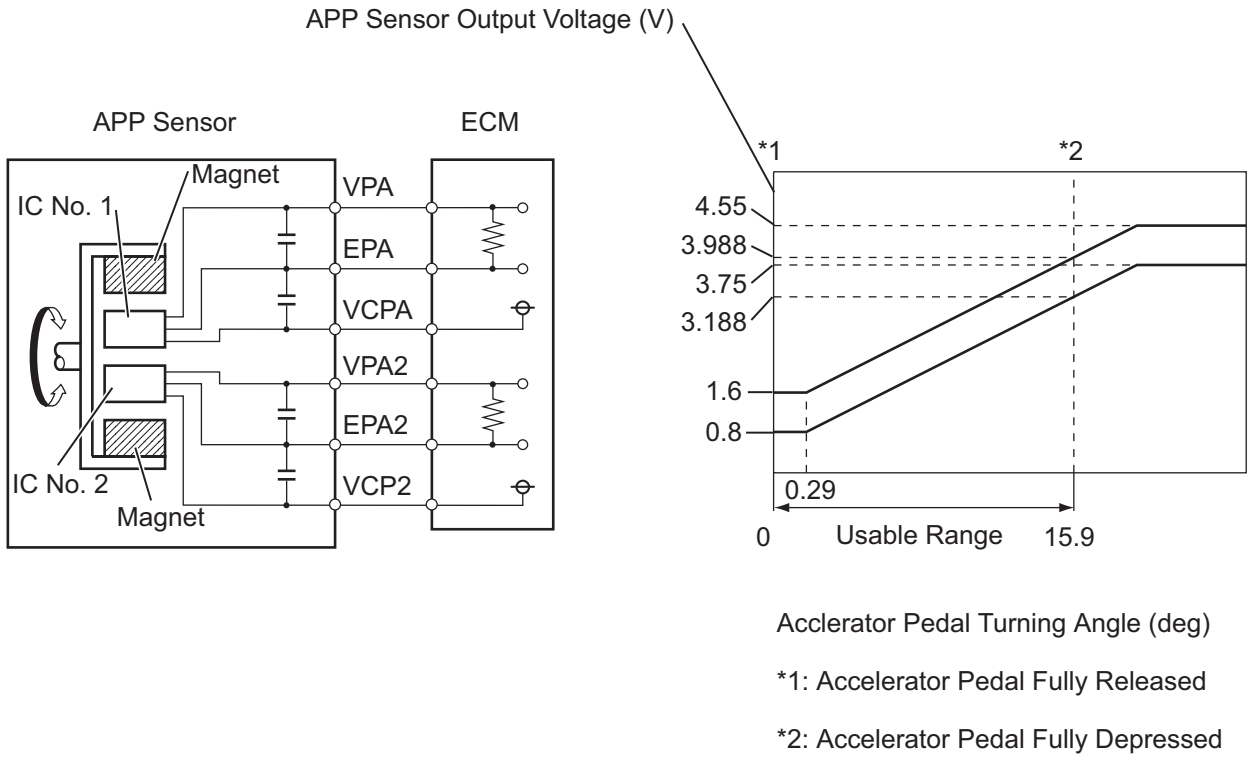

Y

A112620E01

DTC No.	DTC Detection Conditions	Trouble Areas
P2120	VPA fluctuates rapidly beyond upper and lower malfunction thresholds for 0.5 seconds or more (1 trip detection logic)	• APP sensor • ECM
P2122	VPA 0.4 V or less for 0.5 seconds or more when accelerator pedal fully released (1 trip detection logic)	• APP sensor • Open in VCP1 circuit • Open or ground short in VPA circuit • ECM
P2123	VPA 4.8 V or more for 2.0 seconds or more (1 trip detection logic)	• APP sensor • Open in EPA circuit • ECM
P2125	VPA2 fluctuates rapidly beyond upper and lower malfunction thresholds for 0.5 seconds or more (1 trip detection logic)	• APP sensor • ECM
P2127	VPA2 1.2 V or less for 0.5 seconds or more when accelerator pedal fully released (1 trip detection logic)	• APP sensor • Open in VCP2 circuit • Open or ground short in VPA2 circuit • ECM
P2128	Conditions (a) and (b) continue for 2.0 seconds or more (1 trip detection logic): (a) VPA2 4.8 V or more (b) VPA between 0.4 V and 3.45 V	• APP sensor • Open in EPA2 circuit • ECM
P2138	Condition (a) or (b) continues for 2.0 seconds or more (1 trip detection logic): (a) Difference between VPA and VPA2 0.02 V or less (b) VPA 0.4 V or less and VPA2 1.2 V or less	• Short between VPA and VPA2 circuits • APP sensor • ECM

HINT:
When any of these DTCs are set, check the APP sensor voltage by selecting the following menu items on an intelligent tester: DIAGNOSIS / ENHANCED OBD II / DATA LIST / PRIMARY / ACCEL POS #1 and ACCEL POS #2.

Trouble Areas	ACCEL POS #1 When AP Released	ACCEL POS #2 When AP Released	ACCEL POS #1 When AP Depressed	ACCEL POS #2 When AP Depressed
VCP circuit open	0 to 0.2 V	0 to 0.2 V	0 to 0.2 V	0 to 0.2 V
Open or ground short in VPA circuit	0 to 0.2 V	1.2 to 2.0 V	0 to 0.2 V	3.4 to 5.0 V
Open or ground short in VPA2 circuit	0.5 to 1.1 V	0 to 0.2 V	2.6 to 4.5 V	0 to 0.2 V
EPA circuit open	4.5 to 5.0 V	4.5 to 5.0 V	4.5 to 5.0 V	4.5 to 5.0 V
Normal condition	0.5 to 1.1 V	1.2 to 2.0 V	2.6 to 4.5 V	3.4 to 5.0 V

HINT:
- Accelerator pedal positions are expressed as voltages.
- AP denotes for Accelerator Pedal.

ES

MONITOR DESCRIPTION

When either output voltage of VPA or VPA2 deviates from the standard range, or the difference between the output voltages of the 2 sensor circuits is less than the threshold, the ECM determines that there is a malfunction in the APP sensor. The ECM then illuminates the MIL and sets a DTC.
Example:
When the output voltage of VPA drops below 0.4 V for more than 0.5 seconds when the accelerator pedal is fully depressed, DTC P2122 is set.
If the malfunction is not repaired successfully, a DTC is set 2 seconds after the engine is next started.

MONITOR STRATEGY

Related DTCs	P2120: APP sensor 1 range check (fluctuating) P2122: APP sensor 1 range check (low voltage) P2123: APP sensor 1 range check (high voltage) P2125: APP sensor 2 range check (fluctuating) P2127: APP sensor 2 range check (low voltage) P2128: APP sensor 2 range check (high voltage) P2138: APP sensor range check (correlation)
Required Sensors/Components (Main)	APP sensor
Required Sensors/Components (Related)	-
Frequency of Operation	Continuous
Duration	0.5 seconds: P2120, P2122, P2125 and P2127 2.0 seconds: P2123, P2128 and P2138
MIL Operation	Immediate
Sequence of Operation	None

TYPICAL ENABLING CONDITIONS

Monitor runs whenever following DTCs not present	None
Either of following conditions 1 or 2 met:	-
1. Ignition switch	ON
2. Throttle actuator power	ON

TYPICAL MALFUNCTION THRESHOLDS

P2120:

Either of following conditions 1 or 2 met:	-
1. VPA voltage when VPA2 voltage 0.04 V or more	0.4 V or less
2. VPA voltage	4.8 V or more

P2122:

VPA voltage when VPA2 voltage 0.04 V or more	0.4 V or less

P2123:

VPA voltage	4.8 V or more

P2125:

Either of following conditions 1 or 2 met:	-
1. VPA2 voltage when VPA voltage 0.04 V or more	1.2 V or less
2. VPA2 voltage when VPA 0.4 to 3.45 V	4.8 V or more

P2127:

VPA2 voltage when VPA voltage 0.04 V or more	1.2 V or less

P2128:

VPA2 voltage when VPA 0.4 to 3.45 V	4.8 V or more

P2138:

Either of following conditions A or B met:	-
Condition A	-
Difference between VPA and VPA 2 voltages	0.02 V or less
Condition B	-
VPA voltage	0.4 V or less
VPA2 voltage	1.2 V or less

COMPONENT OPERATING RANGE

VPA voltage	0.5 V to 4.5 V
VPA2 voltage	1.2 V to 5.0 V
Difference between VPA and VPA2 voltages	More than 0.02 V

FAIL-SAFE

When any of DTCs P2120, P2121, P2122, P2123, P2125, P2127, P2128 and P2138 are set, the ECM enters fail-safe mode. If either of the 2 sensor circuit malfunctions, the ECM uses the remaining circuit to calculate the accelerator pedal position to allow the vehicle to continue driving. If both of the circuits malfunction, the ECM regards the accelerator pedal as being released. As a result, the throttle valve is closed and the engine idles.
Fail-safe mode continues until a pass condition is detected, and the ignition switch is turned to OFF.

WIRING DIAGRAM

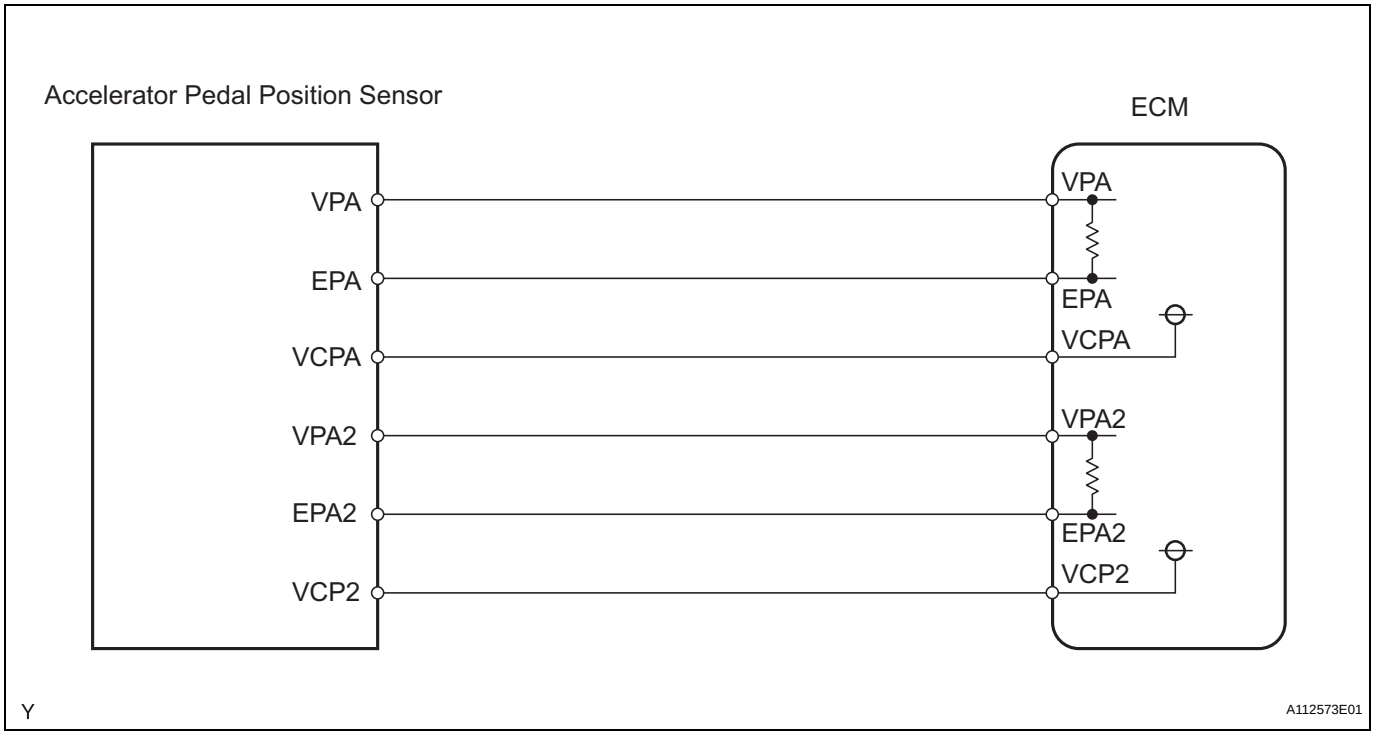

INSPECTION PROCEDURE

HINT:
Read freeze frame data using an intelligent tester. Freeze frame data record the engine condition when malfunctions are detected. When troubleshooting, freeze frame data can help determine if the vehicle was moving or stationary, if the engine was warmed up or not, if the air-fuel ratio was lean or rich, and other data, from the time the malfunction occurred.

1	READ VALUE USING INTELLIGENT TESTER (ACCEL POS #1 AND ACCEL POS #2)

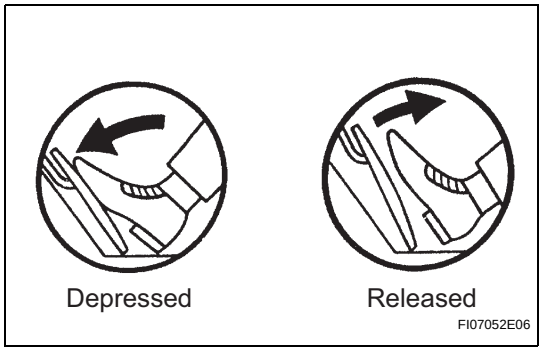

(a) Connect an intelligent tester to the DLC3.
(b) Turn the ignition switch to ON and turn the tester ON.
(c) Select the following menu items: DIAGNOSIS / ENHANCED OBD II / DATA LIST / ETCS / ACCEL POS #1 and ACCEL POS #2.
(d) Read the value displayed on the tester.
Standard voltage

Accelerator Pedal Operations	ACCEL POS #1	ACCEL POS #2
Released → Depressed → Released	0.5 to 4.5 V	1.2 to 5.0 V
	Difference between ACCEL POS #1 and ACCEL POS #2 is greater than 0.02 V	Difference between ACCEL POS #1 and ACCEL POS #2 is greater than 0.02 V

OK → **Go to step 5**

NG

ES

2	CHECK HARNESS AND CONNECTOR (ACCELERATOR PEDAL POSITION SENSOR - ECM)

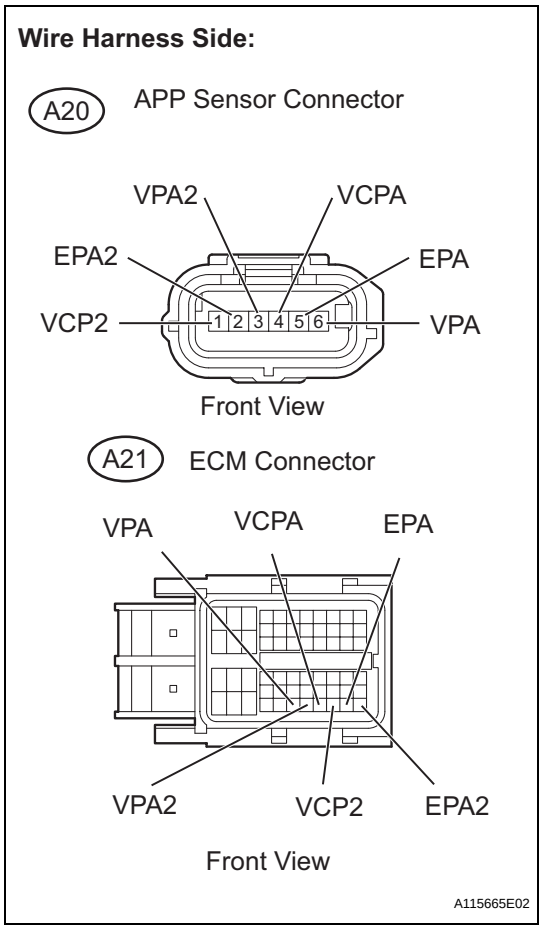

(a) Disconnect the A20 Accelerator Pedal Position (APP) sensor connector.
(b) Disconnect the A21 ECM connector.
(c) Check the resistance.

Standard resistance (Check for open)

Tester Connections	Specified Conditions
VPA (A20-6) - VPA (A21-55)	Below 1 Ω
EPA (A20-5) - EPA (A21-59)	
VCPA (A20-4) - VCPA (A21-57)	
VPA2 (A20-3) - VPA2 (A21-56)	
EPA2 (A20-2) - EPA2 (A21-60)	
VCP2 (A20-1) - VCP2 (A21-58)	

Standard resistance (Check for short)

Tester Connections	Specified Conditions
VPA (A20-6) or VPA (A21-55) - body ground	10 kΩ or higher
EPA (A20-5) or EPA (A21-59) - body ground	
VCPA (A20-4) or VCPA (A21-57) - body ground	
VPA2 (A20-3) or VPA2 (A21-56) - body ground	
EPA2 (A20-2) or EPA2 (A21-60) - body ground	
VCP2 (A20-1) or VCP2 (A21-58) - body ground	

(d) Reconnect the APP sensor connector.
(e) Reconnect the ECM connector.

NG → **REPAIR OR REPLACE HARNESS OR CONNECTOR**

OK

3	INSPECT ECM (VCPA AND VCP2 VOLTAGE)

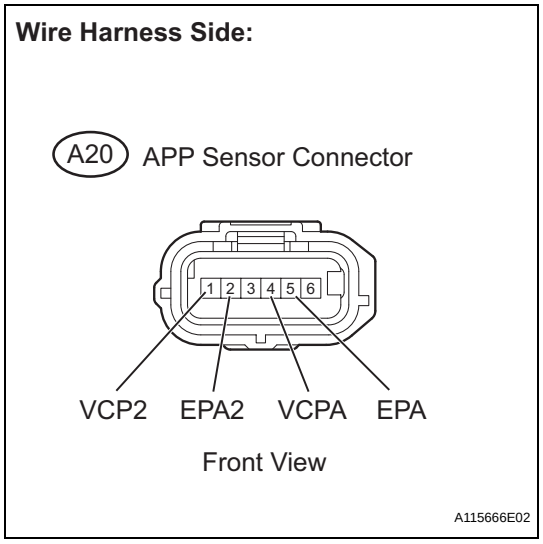

(a) Disconnect the A20 APP sensor connector.
(b) Turn the ignition switch to ON.
(c) Measure the voltage between the terminals of the A20 APP sensor connector.
Standard voltage

Tester Connections	Specified Conditions
VCPA (A20-4) - EPA (A20-5)	4.5 to 5.5 V
VCP2 (A20-1) - EPA2 (A20-2)	

(d) Reconnect the APP sensor connector.

NG → **REPLACE ECM**

OK

4	REPLACE ACCELERATOR PEDAL ASSEMBLY

NEXT

5	CHECK WHETHER DTC OUTPUT RECURS (ACCELERATOR PEDAL POSITION SENSOR DTCS)

(a) Connect the intelligent tester to the DLC3.
(b) Turn the ignition switch to ON and turn the tester ON.
(c) Clear DTCs (See page ES-34).
(d) Start the engine.
(e) Allow the engine to idle for 15 seconds.
(f) Select the following menu items: DIAGNOSIS / ENHANCED OBD II / DTC INFO / CURRENT CODES.
(g) Read DTCs.

Result

Display (DTC Output)	Proceed To
P2120, P2122, P2123, P2125, P2127, P2128, and/or P2138	A
No output	B

B → **SYSTEM OK**

A

REPLACE ECM

ES

DTC	P2121	Throttle / Pedal Position Sensor / Switch "D" Circuit Range / Performance

DESCRIPTION

HINT:

Refer to DTC P2120 (See page ES-266).

DTC No.	DTC Detection Conditions	Trouble Areas
P2121	Difference between VPA and VPA2 less than 0.4 V, or more than 1.2 V for 0.5 seconds (1 trip detection logic)	• Accelerator Pedal Position (APP) sensor • ECM

ES

MONITOR DESCRIPTION

When the difference between the output voltages of VPA and VPA2 deviates from the standard, the ECM determines that the Accelerator Pedal Position (APP) sensor is malfunctioning. The ECM turns on the MIL and the DTC is set.

MONITOR STRATEGY

Related DTCs	P2121: APP sensor rationality
Required Sensors/Components (Main)	APP sensor
Required Sensors/Components (Related)	-
Frequency of Operation	Continuous
Duration	0.5 seconds
MIL Operation	Immediate
Sequence of Operation	None

TYPICAL ENABLING CONDITIONS

Monitor runs whenever following DTCs not present	None
Either of following conditions 1 or 2 met:	-
1. Ignition switch	ON
2. Throttle actuator power	ON

TYPICAL MALFUNCTION THRESHOLDS

Difference between VPA voltage (learned value) and VPA2 voltage (learned value)	Less than 0.4 V, or more than 1.2 V

FAIL-SAFE

The APP sensor has two (main and sub) sensor circuits. If a malfunction occurs in either of the sensor circuits, the ECM detects the abnormal signal voltage difference between the two sensor circuits and switches to limp mode. In limp mode, the functioning circuit is used to calculate the accelerator pedal opening angle to allow the vehicle to continue driving. If both circuits malfunction, the ECM regards the opening angle of the accelerator pedal as being fully closed. In this case, the throttle valve remains closed as if the engine is idling.

If a pass condition is detected and then the ignition switch is turned to OFF, the fail-safe operation stops and the system returns to a normal condition.

WIRING DIAGRAM

Refer to DTC P2120 (See page ES-270).

INSPECTION PROCEDURE

HINT:
Read freeze frame data using an intelligent tester. Freeze frame data record the engine condition when malfunctions are detected. When troubleshooting, freeze frame data can help determine if the vehicle was moving or stationary, if the engine was warmed up or not, if the air-fuel ratio was lean or rich, and other data, from the time the malfunction occurred.

1 CHECK ANY OTHER DTCS OUTPUT (IN ADDITION TO DTC P2121)

(a) Connect an intelligent tester to the DLC3.
(b) Turn the ignition switch to ON.
(c) Turn the tester ON.
(d) Select the following menu items: DIAGNOSIS / ENHANCED OBD II / DTC INFO / CURRENT CODES.
(e) Read DTCs.

Result

Display (DTC Output)	Proceed To
P2121	A
P2121 and other DTCs	B

HINT:
If any DTCs other than P2121 are output, troubleshoot those DTCs first.

B → **GO TO DTC CHART**

A

2 READ VALUE USING INTELLIGENT TESTER (ACCEL POS #1 AND ACCEL POS #2)

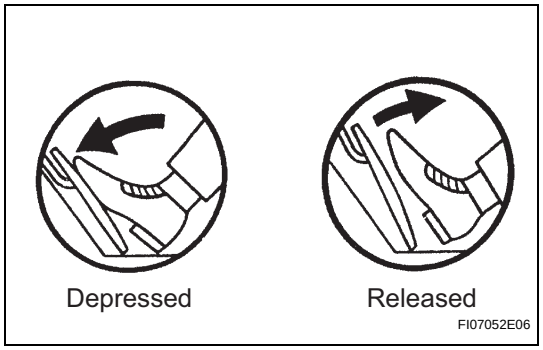

(a) Connect the intelligent tester to the DLC3.
(b) Turn the ignition switch to ON and turn the tester ON.
(c) Select the following menu items: DIAGNOSIS / ENHANCED OBD II / DATA LIST / PRIMARY / ACCEL POS #1 and ACCEL POS #2.
(d) Read the values displayed on the tester.
Standard voltage

Accelerator Pedal Operations	ACCEL POS #1	ACCEL POS #2
Released	0.5 to 1.1 V	1.2 to 2.0 V
Depressed	2.6 to 4.5 V	3.4 to 5.0 V

OK → **CHECK FOR INTERMITTENT PROBLEMS**

NG

3 REPLACE ACCELERATOR PEDAL ASSEMBLY

NEXT

4	CHECK WHETHER DTC OUTPUT RECURS (DTC P2121)

(a) Connect the intelligent tester to the DLC3.
(b) Turn the ignition switch to ON and turn the tester ON.
(c) Clear DTCs (See page ES-34).
(d) Start the engine.
(e) Allow the engine to idle for 15 seconds.
(f) Select the following menu items: DIAGNOSIS / ENHANCED OBD II / DTC INFO / CURRENT CODES.
(g) Read DTCs.

Result

Display (DTC Output)	Proceed To
P2121	A
No output	B

B → **SYSTEM OK**

A

REPLACE ECM

DTC	P2195	Oxygen (A/F) Sensor Signal Stuck Lean (Bank 1 Sensor 1)

DTC	P2196	Oxygen (A/F) Sensor Signal Stuck Rich (Bank 1 Sensor 1)

HINT:
- Although the DTC titles say oxygen sensor, these DTCs relate to the Air-Fuel Ratio (A/F) sensor.
- Sensor 1 refers to the sensor mounted in front of the Three-Way Catalytic Converter (TWC) and located near the engine assembly.

DESCRIPTION

The A/F sensor generates a voltage* that corresponds to the actual air-fuel ratio. This sensor voltage is used to provide the ECM with feedback so that it can control the air-fuel ratio. The ECM determines the deviation from the stoichiometric air-fuel ratio level, and regulates the fuel injection time. If the A/F sensor malfunctions, the ECM is unable to control the air-fuel ratio accurately.
The A/F sensor is of the planar type and is integrated with the heater, which heats the solid electrolyte (zirconia element). This heater is controlled by the ECM. When the intake air volume is low (the exhaust gas temperature is low), a current flows into the heater to heat the sensor, in order to facilitate accurate air-fuel ratio detection. In addition, the sensor and heater portions are narrower than the conventional type. The heat generated by the heater is conducted to the solid electrolyte through the alumina, therefore the sensor activation is accelerated.
In order to obtain a high purification rate of the carbon monoxide (CO), hydrocarbon (HC) and nitrogen oxide (NOx) components in the exhaust gas, a TWC is used. For the most efficient use of the TWC, the air-fuel ratio must be precisely controlled so that it is always close to the stoichiometric level.
*: Value changes inside the ECM. Since the A/F sensor is the current output element, a current is converted into a voltage inside the ECM. Any measurements taken at the A/F sensor or ECM connectors will show a constant voltage.

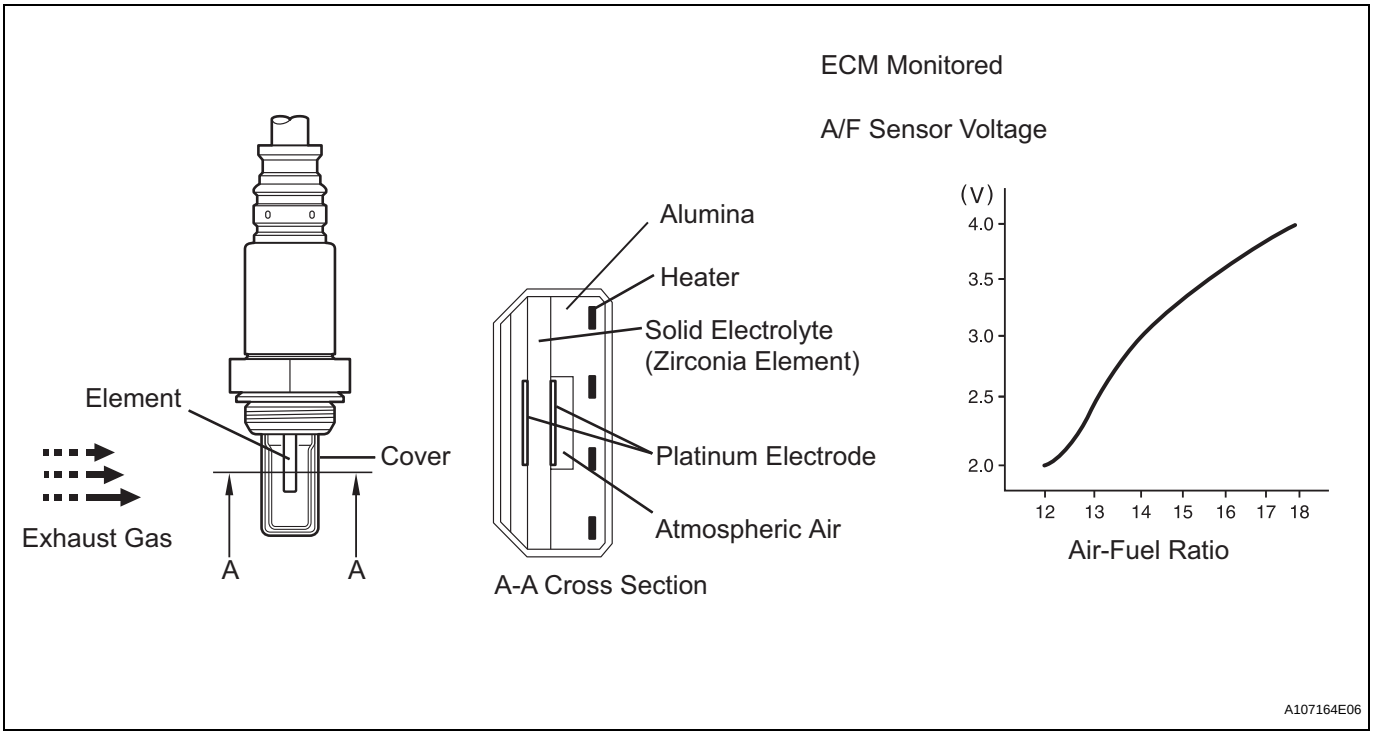

DTC No.	DTC Detection Conditions	Trouble Areas
P2195	Conditions (a) and (b) continue for 10 seconds or more (2 trip detection logic): (a) A/F sensor voltage more than 3.8 V (b) Heated Oxygen (HO2) sensor voltage 0.15 V or more	• Open or short in A/F sensor (sensor 1) circuit • A/F sensor (sensor 1) • A/F sensor heater (sensor 1) • Integration relay (EFI relay) • A/F sensor heater and EFI relay circuits • ECM
	While fuel-cut operation performed (during vehicle deceleration), A/F sensor current 3.6 mA or more for 3 seconds (2 trip detection logic)	• A/F sensor • ECM
P2196	Conditions (a) and (b) continue for 10 seconds or more (2 trip detection logic): (a) A/F sensor voltage less than 2.8 V for 10 seconds (b) HO2 sensor voltage less than 0.6 V	• Open or short in A/F sensor (sensor 1) circuit • A/F sensor (sensor 1) • A/F sensor heater (sensor 1) • Integration relay (EFI relay) • A/F sensor heater and EFI relay circuits • ECM
	While fuel-cut operation performed (during vehicle deceleration), A/F sensor current less than 1.0 mA for 3 seconds (2 trip detection logic)	• A/F sensor • ECM

ES

HINT:
- When either of these DTCs is set, check the A/F sensor output voltage by selecting the following menu items on an intelligent tester: DIAGNOSIS / ENHANCED OBD II / DATA LIST / PRIMARY / AFS B1 S1.
- Short-term fuel trim values can also be read using an intelligent tester.
- The ECM regulates the voltages at the A1A+ and A1A- terminals of the ECM to a constant level. Therefore, the A/F sensor output voltage cannot be confirmed without using an intelligent tester.
- If the A/F sensor is malfunctioning, the ECM sets the DTC P2195 or P2196.

MONITOR DESCRIPTION

Sensor voltage detection monitor

Under the air-fuel ratio feedback control, if the A/F sensor output voltage indicates rich or lean for a certain period of time, the ECM determines that there is a malfunction in the A/F sensor. The ECM illuminates the MIL and sets a DTC.

Example:

If the A/F sensor output voltage is less than 2.8 V (very rich condition) for 10 seconds, despite the rear HO2 sensor output voltage being less than 0.6 V, the ECM sets DTC P2196. Alternatively, if the A/F sensor output voltage is more than 3.8 V (very lean condition) for 10 seconds, despite the rear HO2 sensor output voltage being 0.15 V or more, DTC P2195 is set.

Sensor current detection monitor

A rich air-fuel mixture causes a low A/F sensor current, and a lean air-fuel mixture causes a high A/F sensor current. Therefore, the sensor output becomes low during acceleration, and it becomes high during deceleration with the throttle valve fully closed. The ECM monitors the A/F sensor current during fuel-cut and detects any abnormal current values.

If the A/F sensor output is 3.6 mA or more for more than 3 seconds of cumulative time, the ECM interprets this as a malfunction in the A/F sensor and sets DTC P2195 (high-side stuck). If the A/F sensor output is less than 1.0 mA for more than 3 seconds of cumulative time, the ECM sets DTC P2196 (low-side stuck).

A/F Sensor Current Monitor:

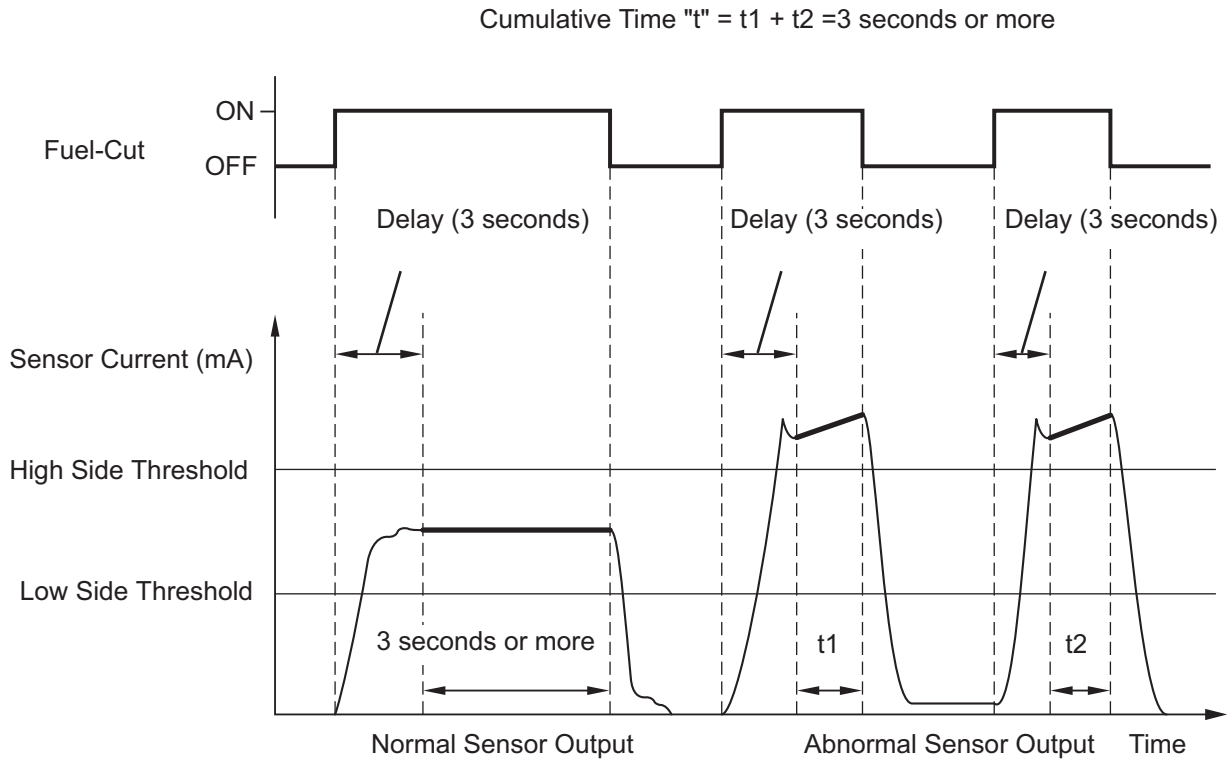

N

A107165E03

ES

MONITOR STRATEGY

Related DTCs	P2195: A/F sensor signal stuck lean P2196: A/F sensor signal stuck rich
Required Sensors/Components (Main)	A/F sensor
Required Sensors/Components (Related)	HO2 sensor
Frequency of Operation	Continuous
Duration	10 seconds: Sensor voltage detection monitor 3 seconds: Sensor current detection monitor
MIL Operation	2 driving cycles
Sequence of Operation	None

TYPICAL ENABLING CONDITIONS

All

Monitor runs whenever following DTCs not present	P0031, P0032 (A/F sensor heater - Sensor 1) P0037, P0038 (O2 sensor heater - Sensor 2) P0100 - P0103 (MAF meter) P0110 - P0113 (IAT sensor) P0115 - P0118 (ECT sensor) P0120 - P0223, P2135 (TP sensor) P0125 (Insufficient ECT for Closed Loop) P0136 (O2 Sensor - Sensor 2) P0171, P0172 (Fuel system) P0300 - P0304 (Misfire) P0335 (CKP sensor) P0340 (CMP sensor) P0455, P0456 (EVAP system) P0500 (VSS)

Sensor voltage detection monitor (Lean side malfunction P2195):

Duration while all of following conditions met	2 seconds or more
Rear HO2 sensor voltage	0.15 V or more
Time after engine start	30 seconds or more
A/F sensor status	Activated
Fuel system status	Closed-loop
Engine	Running

Sensor voltage detection monitor (Rich side malfunction P2196):

Duration while all of following conditions met	2 seconds or more
Rear HO2 sensor voltage	Below 0.6 V
Time after engine start	30 seconds or more
A/F sensor status	Activated
Fuel system status	Closed-loop
Engine	Running

Sensor current detection monitor P2195 and P2196

Battery voltage	11 V or more
Atmospheric pressure	76 kPa (570 mmHg) or more
A/F sensor status	Activated
Continuous time of fuel cut	3 to 10 seconds
ECT	75°C (167°F) or more

TYPICAL MALFUNCTION THRESHOLDS

Sensor voltage detection monitor (Lean side malfunction P2195):

A/F sensor voltage	More than 3.8 V for 10 seconds

Sensor voltage detection monitor (Rich side malfunction P2196):

A/F sensor voltage	Less than 2.8 V for 10 seconds

Sensor current detection monitor (High side malfunction P2195):

A/F sensor current during fuel cut	3.6 mA or more

Sensor current detection monitor (Rich side malfunction P2196):

A/F sensor current during fuel cut	Less than 1 mA

MONITOR RESULT

Refer to CHECKING MONITOR STATUS (See page ES-17).

WIRING DIAGRAM

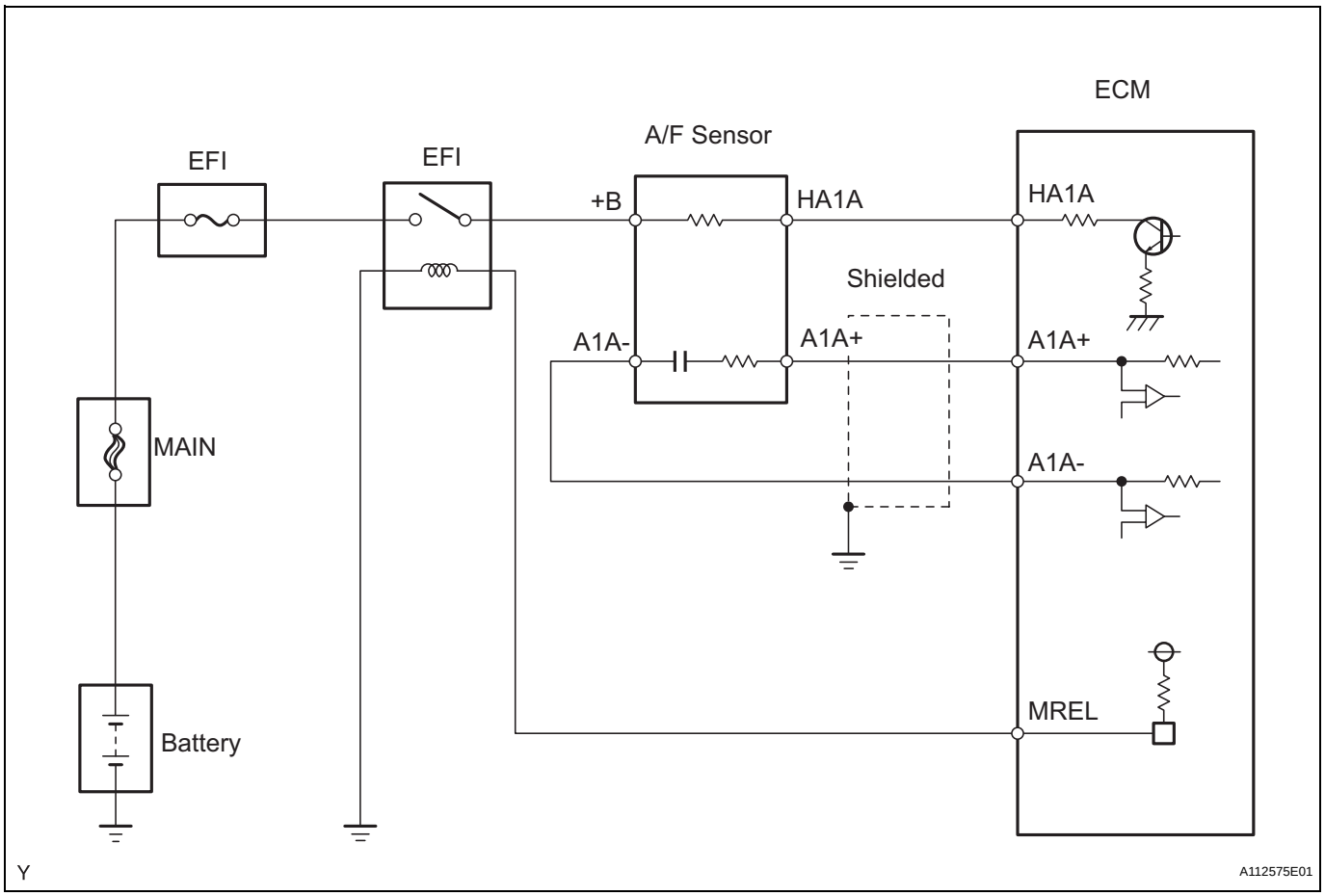

CONFIRMATION DRIVING PATTERN

This confirmation driving pattern is used in the "PERFORM CONFIRMATION DRIVING PATTERN" procedure of the following diagnostic troubleshooting procedure.

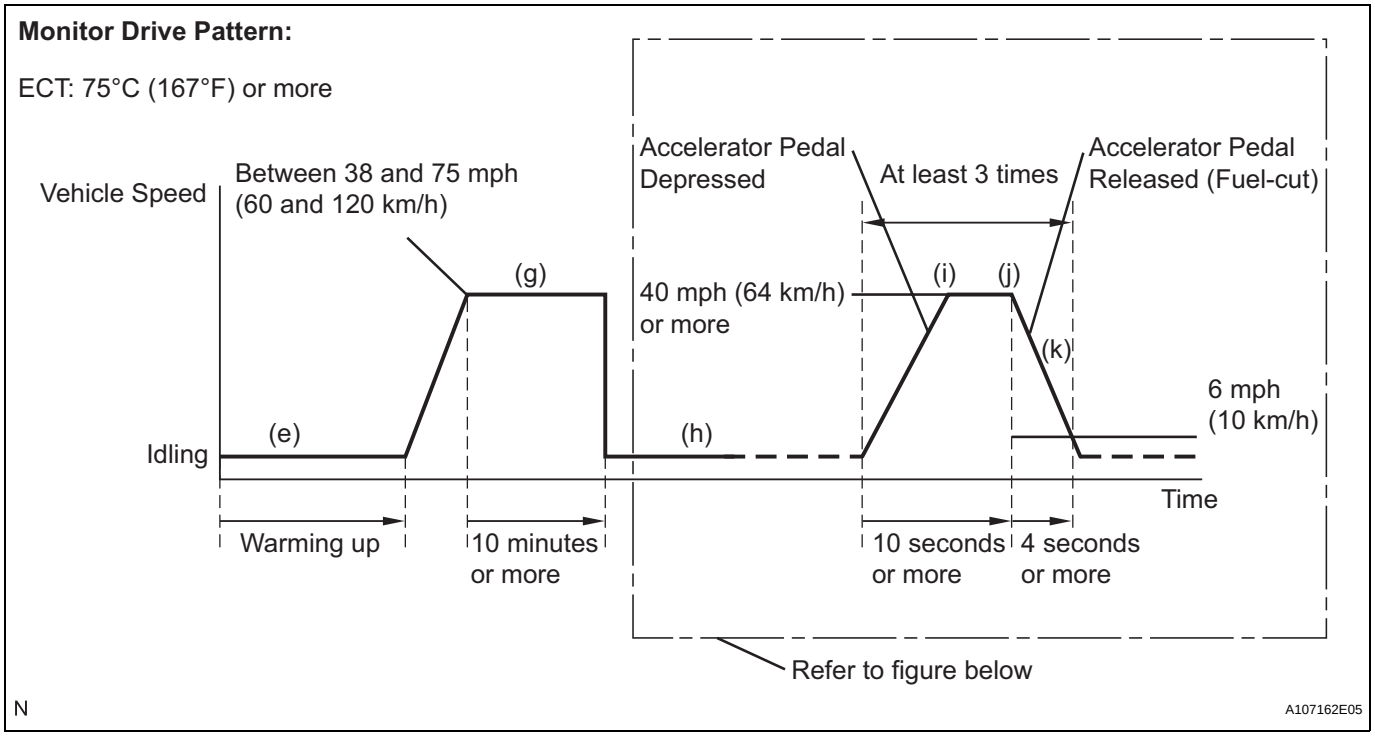

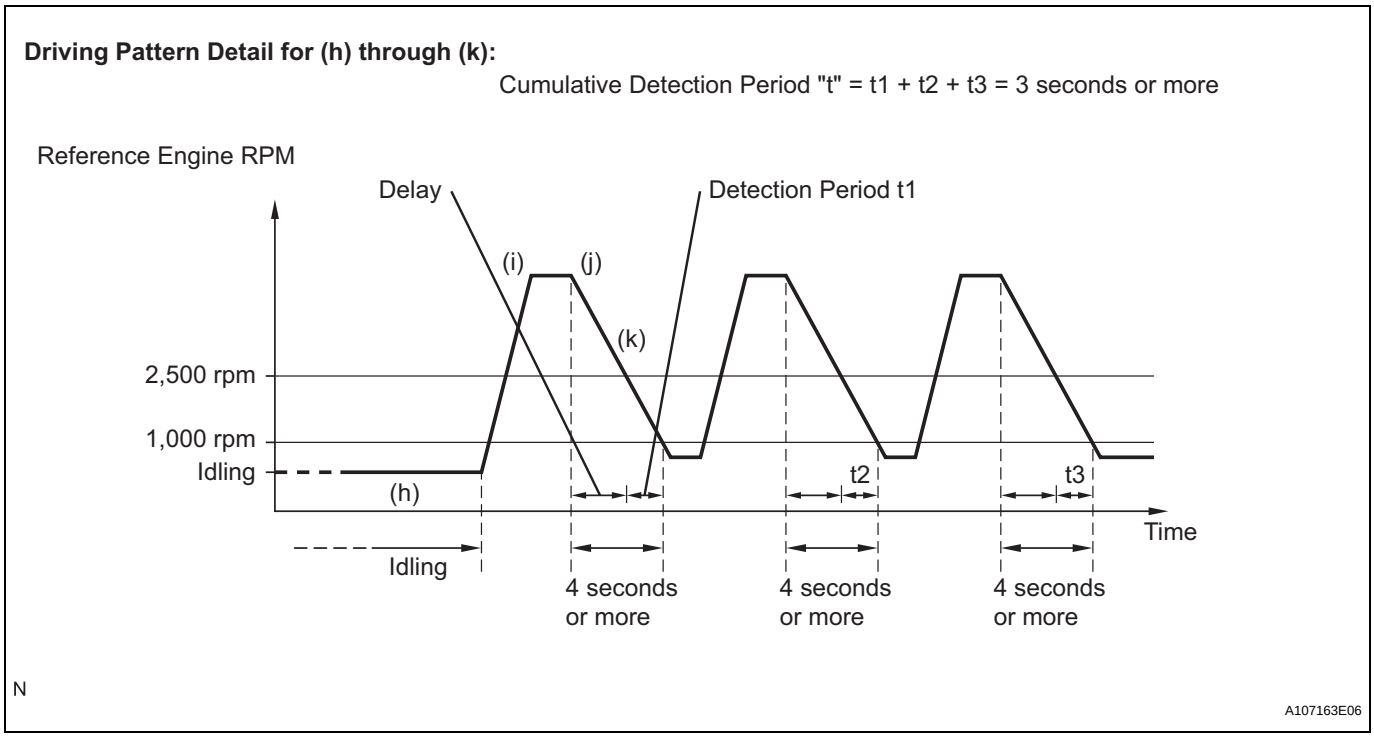

(a) Connect an intelligent tester to the DLC3.
(b) Turn the ignition switch to ON.
(c) Turn the tester ON.
(d) Clear DTCs (See page ES-34).
(e) Start the engine, and warm it up until the ECT reaches 75°C (167°F) or higher.
(f) On the intelligent tester, select the following menu items to check the fuel-cut status: DIAGNOSIS / ENHANCED OBD II / DATA LIST / USER DATA / FC IDLE.
(g) Drive the vehicle at between 38 mph (60 km/h) and 75 mph (120 km/h) for at least 10 minutes.
(h) Change the transmission to 2nd gear.
(i) Drive the vehicle at proper vehicle speed to perform fuel-cut operation (refer to the following HINT).
HINT:
Fuel-cut is performed when the following conditions are met:
- Accelerator pedal fully released.
- Engine speed is 2,500 rpm or more (fuel injection returns at 1,000 rpm).

(j) Accelerate the vehicle to 40 mph (64 km/h) or more by depressing the accelerator pedal for at least 10 seconds.
(k) Soon after performing step (j) above, release the accelerator pedal for at least 4 seconds without depressing the brake pedal, in order to execute fuel-cut control.
(l) Allow the vehicle to decelerate until the vehicle speed declines to less than 6 mph (10 km/h).
(m) Repeat steps from (h) through (k) above at least 3 times in one driving cycle.
HINT:
Completion of all A/F sensor monitors is required to change the value in TEST RESULT.
CAUTION:
Strictly observe posted speed limits, traffic laws, and road conditions when performing these drive patterns.

INSPECTION PROCEDURE

HINT:
Intelligent tester only:
Malfunctioning areas can be identified by performing the A/F CONTROL function provided in the ACTIVE TEST. The A/F CONTROL function can help to determine whether the Air-fuel Ratio (A/F) sensor, Heated Oxygen (HO2) sensor and other potential trouble areas are malfunctioning.

The following instructions describe how to conduct the A/F CONTROL operation using the intelligent tester.
(a) Connect the intelligent tester to the DLC3.
(b) Start the engine and turn the tester ON.
(c) Warm up the engine at an engine speed of 2,500 rpm for approximately 90 seconds.
(d) On the tester, select the following menu items: DIAGNOSIS / ENHANCED OBD II / ACTIVE TEST / A/F CONTROL.
(e) Perform the A/F CONTROL operation with the engine idling (press the RIGHT or LEFT button to change the fuel injection volume).
(f) Monitor the output voltages of the A/F and HO2 sensors (AFS B1 S1 and O2S B1 S2) displayed on the tester.
HINT:
- The A/F CONTROL operation lowers the fuel injection volume by 12.5 % or increases the injection volume by 25 %.
- The sensors react in accordance with increases and decreases in the fuel injection volume.

Standard

Tester Display (Sensor)	Injection Volume	Status	Voltages
AFS B1 S1 (A/F)	+25 %	Rich	Less than 3.0
	-12.5 %	Lean	More than 3.35
O2S B1 S2 (HO2)	+25 %	Rich	More than 0.5
	-12.5 %	Lean	Less than 0.4

NOTICE:
The A/F sensor has an output delay of a few seconds and the HO2 sensor (sensor 2) output has a maximum output delay of approximately of 20 seconds.

Case	A/F Sensor (Sensor 1) Output Voltage		HO2 Sensor (Sensor 2) Output Voltage		Main Suspected Trouble Areas
1	Injection Volume +25 % -12.5 %		Injection Volume +25 % -12.5 %		-
	Output Voltage More than 3.35 V Less than 3.0 V		Output Voltage More than 0.5 V Less than 0.4 V		
2	Injection Volume +25 % -12.5 %		Injection Volume +25 % -12.5 %		• A/F sensor • A/F sensor heater • A/F sensor circuit
	Output Voltage Almost no reaction		Output Voltage More than 0.5 V Less than 0.4 V		
3	Injection Volume +25 % -12.5 %		Injection Volume +25 % -12.5 %		• HO2 sensor • HO2 sensor heater • HO2 sensor circuit
	Output Voltage More than 3.35 V Less than 3.0 V		Output Voltage Almost no reaction	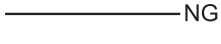	
4	Injection volume +25 % -12.5 %		Injection Volume +25 % -12.5 %		• Injector • Fuel pressure • Gas leakage from exhaust system (Air-fuel ratio extremely lean or rich)
	Output Voltage Almost no reaction	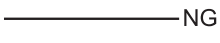	Output Voltage Almost no reaction	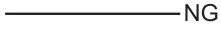	

Following the A/F CONTROL procedure enables technicians to check and graph the voltage outputs of both the A/F and HO2 sensors.
To display the graph, select the following menu items on the tester: DIAGNOSIS / ENHANCED OBD II / ACTIVE TEST / A/F CONTROL / USER DATA / AFS B1 S1 and O2S B1 S2, and press the YES button and then the ENTER button followed by the F4 button.
HINT:
- DTC P2A00 may be set, when the air-fuel ratio is stuck rich or lean.
- Read freeze frame data using an intelligent tester. Freeze frame data record the engine condition when malfunctions are detected. When troubleshooting, freeze frame data can help determine if the vehicle was moving or stationary, if the engine was warmed up or not, if the air-fuel ratio was lean or rich, and other data, from the time the malfunction occurred.
- A low A/F sensor voltage could be caused by a rich air-fuel mixture. Check for conditions that would cause the engine to run rich.
- A high A/F sensor voltage could be caused by a lean air-fuel mixture. Check for conditions that would cause the engine to run lean.

1 CHECK ANY OTHER DTCS OUTPUT (IN ADDITION TO P2195 OR P2196)

(a) Connect an intelligent tester to the DLC3.
(b) Turn the ignition switch to ON.
(c) Turn the tester ON.
(d) Select the following menu items: DIAGNOSIS / ENHANCED OBD II / DTC INFO / CURRENT CODES.
(e) Read DTCs.

Result

Display (DTC Output)	Proceed To
P2195 or P2196	A
P2195 or P2196 and other DTCs	B

HINT:
If any DTCs relating to the A/F sensor (DTCs for the A/F sensor heater or A/F sensor admittance) are output, troubleshoot those DTCs first.

B → **GO TO DTC CHART**

A

2 READ VALUE USING INTELLIGENT TESTER (TEST VALUE OF A/F SENSOR)

(a) Connect the intelligent tester to the DLC3.
(b) Turn the ignition switch to ON and turn the tester ON.
(c) Clear DTCs (See page ES-34).
(d) Drive the vehicle in accordance with the drive pattern described in the CONFIRMATION DRIVING PATTERN.
(e) Select the following menu items: DIAGNOSIS / ENHANCED OBD II / MONITOR INFO / MONITOR STATUS.
(f) Check that the status of O2S MON is COMPL.
If the status is still INCMPL, drive the vehicle according to the driving pattern again.
HINT:
- AVAIL indicates that the component has not been monitored yet.

- COMPL indicates that the component is functioning normally.
- INCMPL indicates that the component is malfunctioning.

(g) Select the following menu items: DIAGNOSIS / ENHANCED OBD II / MONITOR INFO / TEST RESULT / RANGE B1 S1, then press the ENTER button.

(h) Check the test value of the A/F sensor output current during fuel-cut.

Result

Test Value	Proceed To
Within normal range (1.0 mA or more, and less than 3.6 mA)	A
Outside normal range (Less than 1.0 mA, or 3.6 mA or more)	B

B → **Go to step 12**

A

3 READ VALUE USING INTELLIGENT TESTER (OUTPUT VOLTAGE OF A/F SENSOR)

(a) Connect the intelligent tester to the DLC3.

(b) Start the engine.

(c) Turn the tester ON.

(d) Warm up the A/F sensor at an engine speed of 2,500 rpm for 90 seconds.

(e) On the tester, select the following menu items: DIAGNOSIS / ENHANCED OBD II / SNAPSHOT / MANUAL SNAPSHOT / USER DATA / AFS B1 S1 and ENGINE SPD.

(f) Check the A/F sensor voltage three times, when the engine is in each of the following conditions:
(1) While idling (check for at least 30 seconds)
(2) At an engine speed of approximately 2,500 rpm (without any sudden changes in engine speed)
(3) Raise the engine speed to 4,000 rpm and then quickly release the accelerator pedal so that the throttle valve is fully closed.

Standard voltage

Conditions	A/F Sensor Voltage Variations	Reference
(1) and (2)	Remains at approximately 3.3 V	Between 3.1 V and 3.5 V
(3)	Increases to 3.8 V or more	This occurs during engine deceleration (when fuel-cut performed)

HINT:
- For more information, see the diagrams below.

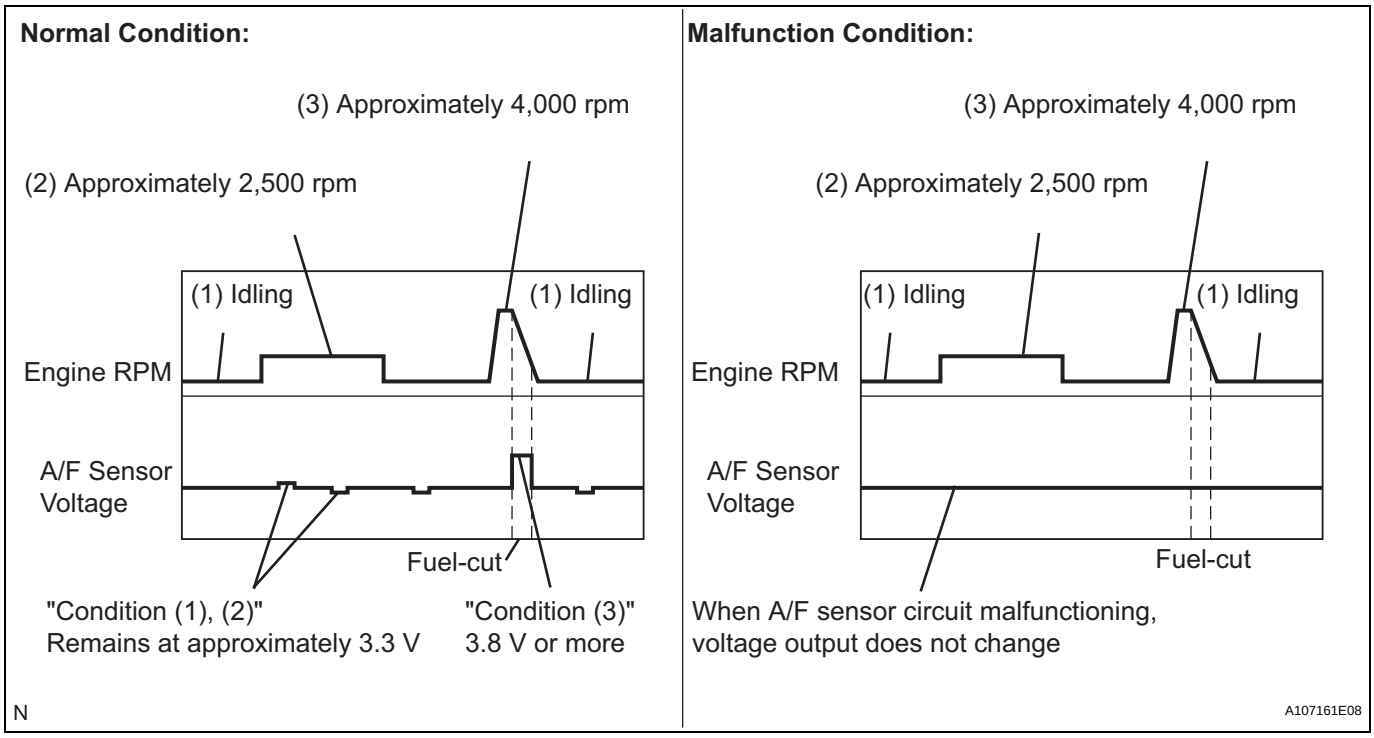

- If the output voltage of the A/F sensor remains at approximately 3.3 V (see Malfunction Condition diagram) under any conditions, including those above, the A/F sensor may have an open circuit. (This will also happen if the A/F sensor heater has an open circuit.)
- If the output voltage of the A/F sensor remains at either approximately 3.8 V or more, or 2.8 V or less (see Malfunction Condition diagram) under any conditions, including those above, the A/F sensor may have a short circuit.
- The ECM stops fuel injection (fuel cut) during engine deceleration. This causes a lean condition and result in a momentary increase in the A/F sensor output voltage.
- The ECM must establish a closed throttle valve position learning value to perform fuel cut. If the battery terminal has been reconnected, the vehicle must be driven over 10 mph (16 km/h) to allow the ECM to learn the closed throttle valve position.
- When the vehicle is driven:
  The output voltage of the A/F sensor may be below 2.8 V during fuel enrichment. For the vehicle, this translates to a sudden increase in speed with the accelerator pedal fully depressed when trying to overtake another vehicle. The A/F sensor is functioning normally.
- The A/F sensor is a current output element; therefore, the current is converted into a voltage inside the ECM. Measuring the voltage at the connectors of the A/F sensor or ECM will show a constant voltage result.

NG	**Go to step 9**

OK

4	PERFORM CONFIRMATION DRIVING PATTERN

NEXT

5	CHECK WHETHER DTC OUTPUT RECURS (DTC P2195 OR P2196)

(a) Read DTCs using the intelligent tester.
(b) Select the following menu items: DIAGNOSIS / ENHANCED OBD II / DTC INFO / PENDING CODES.

ES

Result

Display (DTC Output)	Proceed To
P2195 or P2196	A
No output	B

B → END

A

6	REPLACE AIR FUEL RATIO SENSOR

NEXT

7	PERFORM CONFIRMATION DRIVING PATTERN

NEXT

8	CHECK WHETHER DTC OUTPUT RECURS (DTC P2195 OR P2196)

(a) Read DTCs using the intelligent tester.
(b) Select the following menu items: DIAGNOSIS / ENHANCED OBD II / DTC INFO / PENDING CODES.

Result

Display (DTC Output)	Proceed To
No output	A
P2195 or P2196	B

B → REPLACE ECM

A

END

9	INSPECT AIR FUEL RATIO SENSOR (HEATER RESISTANCE) (See page ES-77)

NG → REPLACE AIR FUEL RATIO SENSOR

OK

10	INSPECT INTEGRATION RELAY (EFI RELAY) (See page ES-78)

NG → REPLACE INTEGRATION RELAY (EFI RELAY)

ES

OK

11	CHECK HARNESS AND CONNECTOR (A/F SENSOR - ECM)

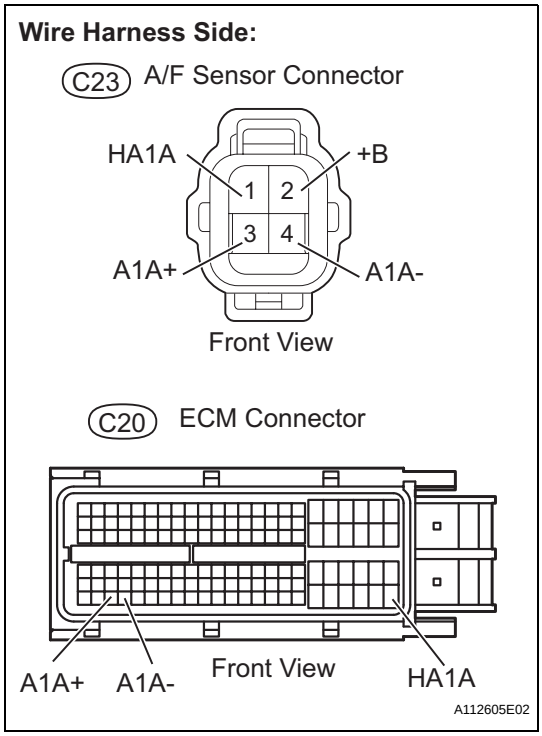

(a) Disconnect the C23 A/F sensor connector.
(b) Turn the ignition switch to ON.
(c) Check the voltage between the +B terminal of the A/F sensor connector and body ground.

Standard voltage

Tester Connections	Specified Conditions
+B (C23-2) - Body ground	11 to 14 V

(d) Turn the ignition switch to OFF.
(e) Disconnect the C20 ECM connector.
(f) Check the resistance.

Standard resistance (Check for open)

Tester Connections	Specified Conditions
HA1A (C23-1) - HA1A (C20-109)	Below 1 Ω
A1A+ (C23-3) - A1A+ (C20-112)	
A1A- (C23-4) - A1A- (C20-113)	

Standard resistance (Check for short)

Tester Connections	Specified Conditions
HA1A (C23-1) or HA1A (C20-109) - Body ground	10 kΩ or higher
A1A+ (C23-3) or A1A+ (C20-112) - Body ground	
A1A- (C23-4) or A1A- (C20-113) - Body ground	

(g) Reconnect the ECM connector.
(h) Reconnect the A/F sensor connector.

Reference (System Diagram of Sensor 1):

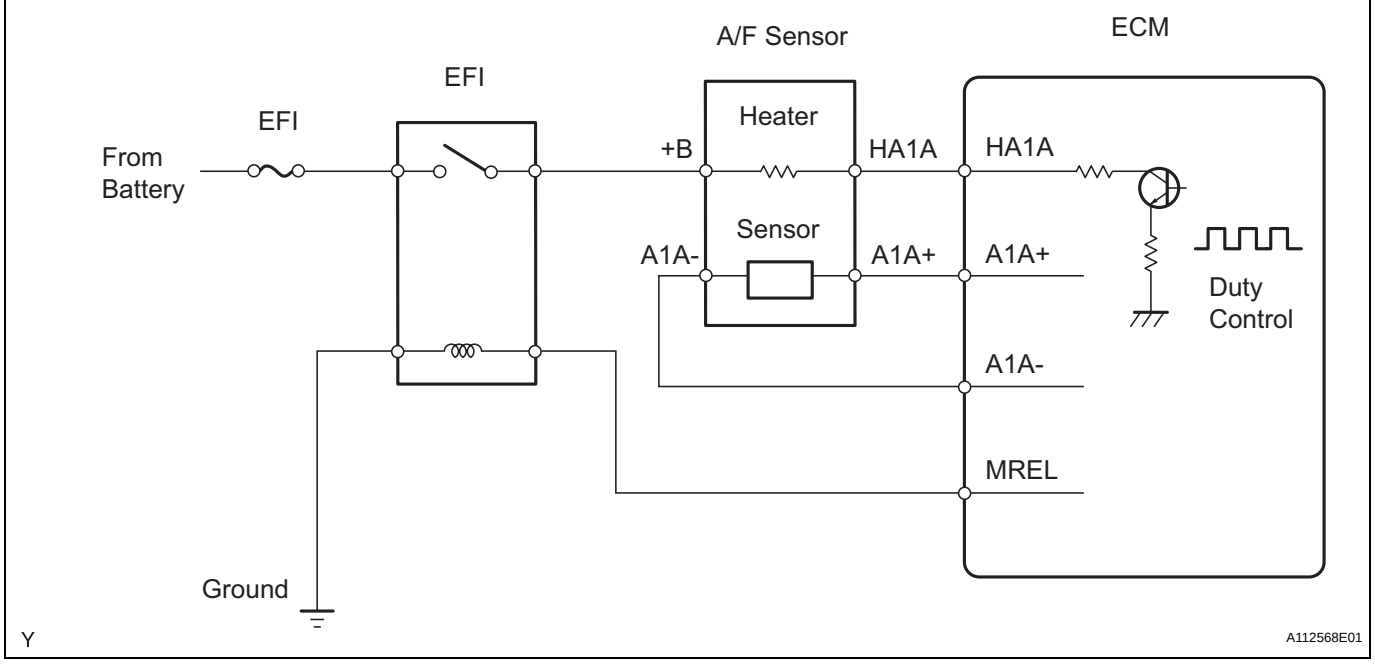

NG → **REPAIR OR REPLACE HARNESS OR CONNECTOR**

OK

12	REPLACE AIR FUEL RATIO SENSOR

NEXT

13	PERFORM CONFIRMATION DRIVING PATTERN

NEXT

14	CHECK WHETHER DTC OUTPUT RECURS (DTC P2195 OR P2196)

(a) Read DTCs using the intelligent tester.
(b) Select the following menu items: DIAGNOSIS / ENHANCED OBD II / DTC INFO / PENDING CODES.

Result

Display (DTC Output)	Proceed To
No output	A
P2195 or P2196	B

B → **REPLACE ECM**

ES

A

END

DTC	P2238	Oxygen (A/F) Sensor Pumping Current Circuit Low (Bank 1 Sensor 1)

DTC	P2239	Oxygen (A/F) Sensor Pumping Current Circuit High (Bank 1 Sensor 1)

DTC	P2252	Oxygen (A/F) Sensor Reference Ground Circuit Low (Bank 1 Sensor 1)

DTC	P2253	Oxygen (A/F) Sensor Reference Ground Circuit High (Bank 1 Sensor 1)

HINT:
- Although the DTC titles say oxygen sensor, these DTCs relate to the Air-Fuel Ratio (A/F) sensor.
- Sensor 1 refers to the sensor mounted in front of the Three-Way Catalytic Converter (TWC) and located near the engine assembly.

DESCRIPTION

Refer to DTC P2195 (See page ES-276).

DTC No.	DTC Detection Conditions	Trouble Areas
P2238	• Case 1: Condition (a) or (b) continues for 5.0 seconds or more (2 trip detection logic): (a) AF+ voltage 0.5 V or less (b) (AF+) - (AF-) = 0.1 V or less • Case 2: A/F sensor admittance: Less than 0.022 1/Ω (2 trip detection logic)	• Open or short in A/F sensor (sensor 1) circuit • A/F sensor (sensor 1) • A/F sensor heater (sensor 1) • Integration relay (EFI relay) • A/F sensor heater and EFI relay circuits • ECM
P2239	AF+ voltage more than 4.5 V for 5.0 seconds or more (2 trip detection logic)	• Open or short in A/F sensor (sensor 1) circuit • A/F sensor (sensor 1) • A/F sensor heater (sensor 1) • Integration relay (EFI relay) • A/F sensor heater and EFI relay circuits • ECM
P2252	AF- voltage 0.5 V or less for 5.0 seconds or more (2 trip detection logic)	• Open or short in A/F sensor (sensor 1) circuit • A/F sensor (sensor 1) • A/F sensor heater (sensor 1) • Integration relay (EFI relay) • A/F sensor heater and EFI relay circuits • ECM
P2253	AF- voltage more than 4.5 V for 5.0 seconds or more (2 trip detection logic)	• Open or short in A/F sensor (sensor 1) circuit • A/F sensor (sensor 1) • A/F sensor heater (sensor 1) • Integration relay (EFI realy) • A/F sensor heater and EFI relay circuits • ECM

MONITOR DESCRIPTION

The Air-Fuel Ratio (A/F) sensor varies its output voltage in proportion to the air-fuel ratio. If the A/F sensor impedance (alternating current resistance) or output voltage deviates greatly from the standard range, the ECM determines that there is an open or short in the A/F sensor circuit.

MONITOR STRATEGY

Related DTCs	P2238: A/F sensor open circuit between AF+ and AF- P2238: A/F sensor short circuit between AF+ and AF- P2238: A/F sensor short circuit between AF+ and GND P2239: A/F sensor short circuit between AF+ and +B P2252: A/F sensor short circuit between AF- and GND P2253: A/F sensor short circuit between AF- and +B
Required Sensors/Components (Main)	A/F sensor
Required Sensors/Components (Related)	Engine Coolant Temperature (ECT) sensor, Crankshaft position sensor
Frequency of Operation	Once per driving cycle
Duration	10 seconds: A/F sensor open circuit between AF+ and AF- 5 seconds: Others
MIL Operation	2 driving cycles
Sequence of Operation	None

ES

TYPICAL ENABLING CONDITIONS

Monitor runs whenever following DTCs not present	P0031, P0032 (A/F sensor heater - Sensor 1) P0100 - P0103 (MAF meter) P0110 - P0113 (IAT sensor) P0115 - P0118 (ECT sensor) P0120 - P0223, P2135 (TP sensor) P0125 (Insufficient ECT for Closed Loop) P0171, P0172 (Fuel system) P0300 - P0304 (Misfire) P0335 (CKP sensor) P0340 (CMP sensor) P0455, P0456 (EVAP system) P0500 (VSS)

P2238 (open circuit between AF+ and AF-):

AF+ terminal voltage	0.5 to 4.5 V
AF- terminal voltage	0.5 to 4.5 V
Difference between AF+ and AF- terminal voltages	0.1 to 0.8 V
ECT	5°C (41°F) or more (varies with ECT at engine start)
Engine	Running
Fuel-cut	OFF
Time after fuel-cut OFF	5 seconds or more
A/F sensor heater	ON
Battery voltage	11 V or more
Ignition switch	ON
Time after ignition switch is OFF to ON	5 seconds or more

Others:

Battery voltage	11 V or more
Ignition switch	ON
Time after ignition switch is OFF to ON	5 seconds or more

TYPICAL MALFUNCTION THRESHOLDS

P2238 (Open circuit between AF+ and AF-):

A/F sensor admittance	Below 0.022 1/Ω

P2238 (Short circuit between AF+ and GND):

AF+ terminal voltage	0.5 V or less

P2238 (Short circuit between AF+ and AF-):

Difference between AF+ and AF- terminal voltages	0.1 V or less

P2239 (Short circuit between AF+ and +B):

AF+ terminal voltage	More than 4.5 V

P2252 (Short circuit between AF- and GND):

AF- terminal voltage	0.5 V or less

P2253 (Short circuit between AF- and +B):

AF- terminal voltage	More than 4.5 V

WIRING DIAGRAM

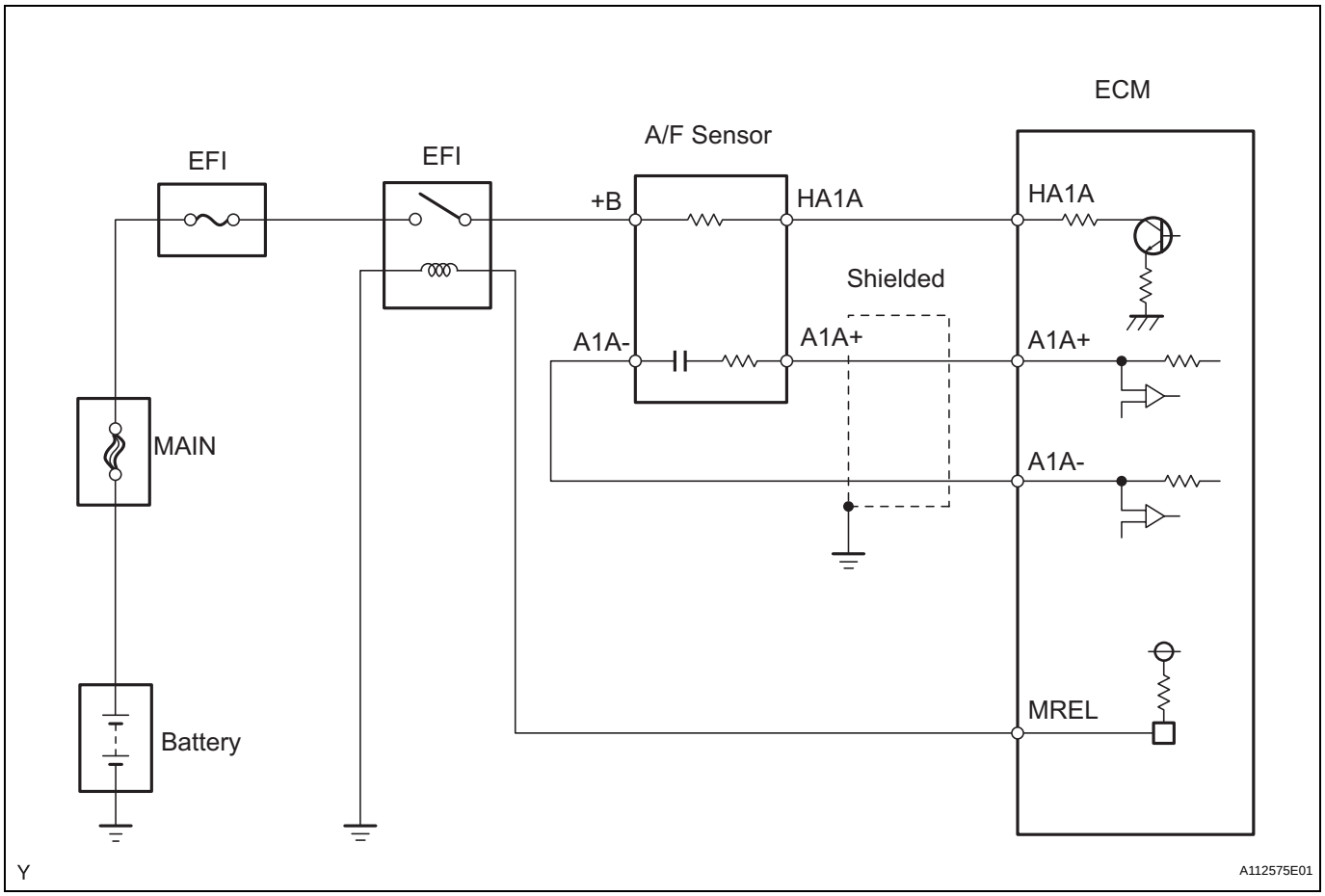

INSPECTION PROCEDURE

HINT:
Intelligent tester only:
Malfunctioning areas can be identified by performing the A/F CONTROL function provided in the ACTIVE TEST. The A/F CONTROL function can help to determine whether the Air-Fuel Ratio (A/F) sensor, Heated Oxygen (HO2) sensor and other potential trouble areas are malfunctioning.
The following instructions describe how to conduct the A/F CONTROL operation using the intelligent tester.
(a) Connect the intelligent tester to the DLC3.
(b) Start the engine and turn the tester ON.
(c) Warm up the engine at an engine speed of 2,500 rpm for approximately 90 seconds.
(d) On the tester, select the following menu items: DIAGNOSIS / ENHANCED OBD II / ACTIVE TEST / A/F CONTROL.
(e) Perform the A/F CONTROL operation with the engine idling (press the RIGHT or LEFT button to change the fuel injection volume).

(f) Monitor the output voltages of the A/F and HO2 sensors (AFS B1 S1 and O2S B1 S2) displayed on the tester.
HINT:
- The A/F CONTROL operation lowers the fuel injection volume by 12.5 % or increases the injection volume by 25 %.
- The sensors react in accordance with increases and decreases in the fuel injection volume.

Standard

Tester Display (Sensor)	Injection Volume	Status	Voltages
AFS B1 S1 (A/F)	+25 %	Rich	Less than 3.0
	-12.5 %	Lean	More than 3.35
O2S B1 S2 (HO2)	+25 %	Rich	More than 0.5
	-12.5 %	Lean	Less than 0.4

NOTICE:
The A/F sensor has an output delay of a few seconds and the HO2 sensor has a maximum output delay of approximately 20 seconds.

Case	A/F Sensor (Sensor 1) Output Voltage		HO2 Sensor (Sensor 2) Output Voltage		Main Suspected Trouble Areas
1	Injection Volume +25 % -12.5 %		Injection Volume +25 % -12.5 %		-
	Output Voltage More than 3.35 V Less than 3.0 V		Output Voltage More than 0.5 V Less than 0.4 V		
2	Injection Volume +25 % -12.5 %		Injection Volume +25 % -12.5 %		• A/F sensor • A/F sensor heater • A/F sensor circuit
	Output Voltage Almost no reaction		Output Voltage More than 0.5 V Less than 0.4 V		
3	Injection Volume +25 % -12.5 %		Injection Volume +25 % -12.5 %		• HO2 sensor • HO2 sensor heater • HO2 sensor circuit
	Output Voltage More than 3.35 V Less than 3.0 V		Output Voltage Almost no reaction		
4	Injection volume +25 % -12.5 %		Injection Volume +25 % -12.5 %		• Injector • Fuel pressure • Gas leakage from exhaust system (Air-fuel ratio extremely lean or rich)
	Output Voltage Almost no reaction		Output Voltage Almost no reaction		

Following the A/F CONTROL procedure enables technicians to check and graph the output voltages of both the A/F and HO2 sensors.
To display the graph, select the following menu items on the tester: DIAGNOSIS / ENHANCED OBD II / ACTIVE TEST / A/F CONTROL / USER DATA / AFS B1 S1 and O2S B1 S2, and press the YES button and then the ENTER button followed by the F4 button.

HINT:
Read freeze frame data using an intelligent tester. Freeze frame data record the engine condition when malfunctions are detected. When troubleshooting, freeze frame data can help determine if the vehicle was moving or stationary, if the engine was warmed up or not, if the air-fuel ratio was lean or rich, and other data, from the time the malfunction occurred.

1 **INSPECT AIR FUEL RATIO SENSOR (HEATER RESISTANCE) (See page ES-77)**

NG → **REPLACE AIR FUEL RATIO SENSOR**

OK

2 **INSPECT INTEGRATION RELAY (EFI RELAY) (See page ES-78)**

NG → **REPLACE INTEGRATION RELAY (EFI RELAY)**

OK

3 **CHECK HARNESS AND CONNECTOR (A/F SENSOR - ECM) (See page ES-294)**

NG → **REPAIR OR REPLACE HARNESS OR CONNECTOR**

OK

4 **REPLACE AIR FUEL RATIO SENSOR**

NEXT

5 **CHECK WHETHER DTC OUTPUT RECURS**

(a) Connect the intelligent tester to the DLC3.
(b) Turn the ignition switch to ON and turn the tester ON.
(c) Clear DTCs (See page ES-34).
(d) Start the engine.
(e) Allow the engine to idle for 5 minutes or more.
(f) Select the following menu items: DIAGNOSIS / ENHANCED OBD II / DTC INFO / PENDING CODES.
(g) Read pending DTCs.

Result

Display (DTC Output)	Proceed To
No output	A
P2238, P2239, P2252 or P2253	B

B → **REPLACE ECM**

A

END

DTC	P2401	Evaporative Emission Leak Detection Pump Stuck OFF

DTC	P2402	Evaporative Emission Leak Detection Pump Stuck ON

DTC SUMMARY

DTCs	Monitoring Items	Malfunction Detection Conditions	Trouble Areas	Detection Timings	Detection Logic
P2401	Leak detection pump stuck OFF	P043E, P043F, P2401, P2402 and P2419 present when one of following conditions met during key-off EVAP monitor: • EVAP pressure just after reference pressure measurement greater than -1 kPa-g (-7.5 mmHg-g) • Reference pressure less than -4.85 kPa-g (-36.4 mmHg-g) • Reference pressure greater than -1.057 kPa-g (-7.93 mmHg-g) • Reference pressure not saturated • Reference pressure difference between first and second 0.7 kPa-g (5.25 mmHg-g) or more HINT: Typical example values	• Canister pump module (Reference orifice, leak detection pump, vent valve) • Connector/wire harness (Canister pump module - ECM) • EVAP system hose (pipe from air inlet port to canister pump module, canister filter, fuel tank vent hose) • ECM	While ignition switch OFF	2 trip
P2402	Leak detection pump stuck ON		• Canister pump module (Reference orifice, leak detection pump, vent valve) • Connector/wire harness (Canister pump module - ECM) • EVAP system hose (pipe from air inlet port to canister pump module, canister filter, fuel tank vent hose) • ECM	While ignition switch OFF	2 trip

HINT:
The leak detection pump is built into the canister pump module.

DESCRIPTION

The description can be found in the EVAP (Evaporative Emission) System (See page ES-319).

INSPECTION PROCEDURE

Refer to the EVAP System (See page ES-324).

MONITOR DESCRIPTION

5 hours* after the ignition switch is turned to OFF, the leak detection pump creates negative pressure (vacuum) in the EVAP system. The ECM monitors for leaks and actuator malfunctions based on the EVAP pressure.
HINT:
*: If the engine coolant temperature is not below 35°C (95°F) 5 hours after the ignition switch is turned to OFF, the monitor check starts 2 hours later. If it is still not below 35°C (95°F) 7 hours after the ignition switch is turned to OFF, the monitor check starts 2.5 hours later.

Sequence	Operations	Descriptions	Duration
-	ECM activation	Activated by soak timer, 5 hours (7 or 9.5 hours) after ignition switch turned to OFF.	-

Sequence	Operations	Descriptions	Duration
A	Atmospheric pressure measurement	Vent valve turned OFF (vent) and EVAP system pressure measured by ECM in order to register atmospheric pressure. If pressure in EVAP system not between 76 kPa-a and 110 kPa-a (570 mmHg-a and 825 mmHg-a), ECM cancels EVAP system monitor.	10 seconds
B	First reference pressure measurement	In order to determine reference pressure, leak detection pump creates negative pressure (vacuum) through reference orifice and then ECM checks if leak detection pump and vent valve operate normally.	60 seconds
C	EVAP system pressure measurement	Vent valve turned ON (closed) to shut EVAP system. Negative pressure (vacuum) created in EVAP system, and EVAP system pressure then measured. Write down measured value as will be used in leak check. If EVAP pressure does not stabilize within 15 minutes, ECM cancels EVAP system monitor.	15 minutes*
D	Purge VSV monitor	Purge VSV opened and then EVAP system pressure measured by ECM. Large increase indicates normality.	10 seconds
E	Second reference pressure measurement	After second reference pressure measurement, leak check performed by comparing first and second reference pressure. If stabilized system pressure higher than second reference pressure, ECM determines that EVAP system leaking.	60 seconds
F	Final check	Atmospheric pressure measured and then monitoring result recorded by ECM.	-

* If only a small amount of fuel is in the fuel tank, it takes longer for the EVAP pressure to stabilize.

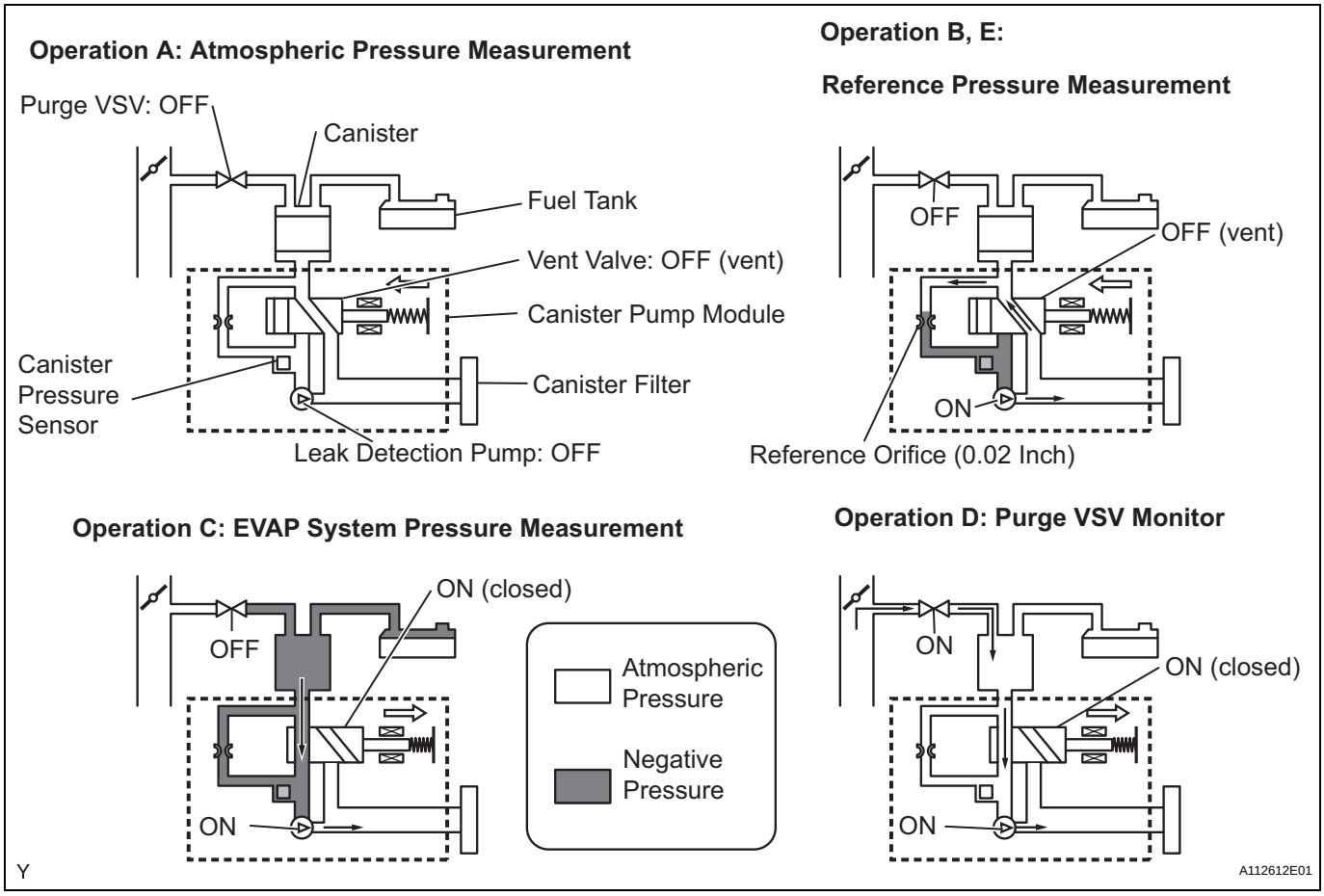

1. P2401: Leak detection pump stuck OFF
   In operation B, the leak detection pump creates negative pressure (a vacuum) through the reference orifice. The EVAP system pressure is then measured by the ECM, using the canister pressure sensor, to determine the reference pressure. If the pressure is higher than -1.057 kPa-g (-7.93 mmHg-g), or lower than -4.85 kPa-g (-36.4 mmHg-g), the ECM interprets this as the leak detection pump being stuck OFF (not operating). The ECM illuminates the MIL and sets the DTC (2 trip detection logic).

EVAP Pressure when Leak Detection Pump Stuck OFF:

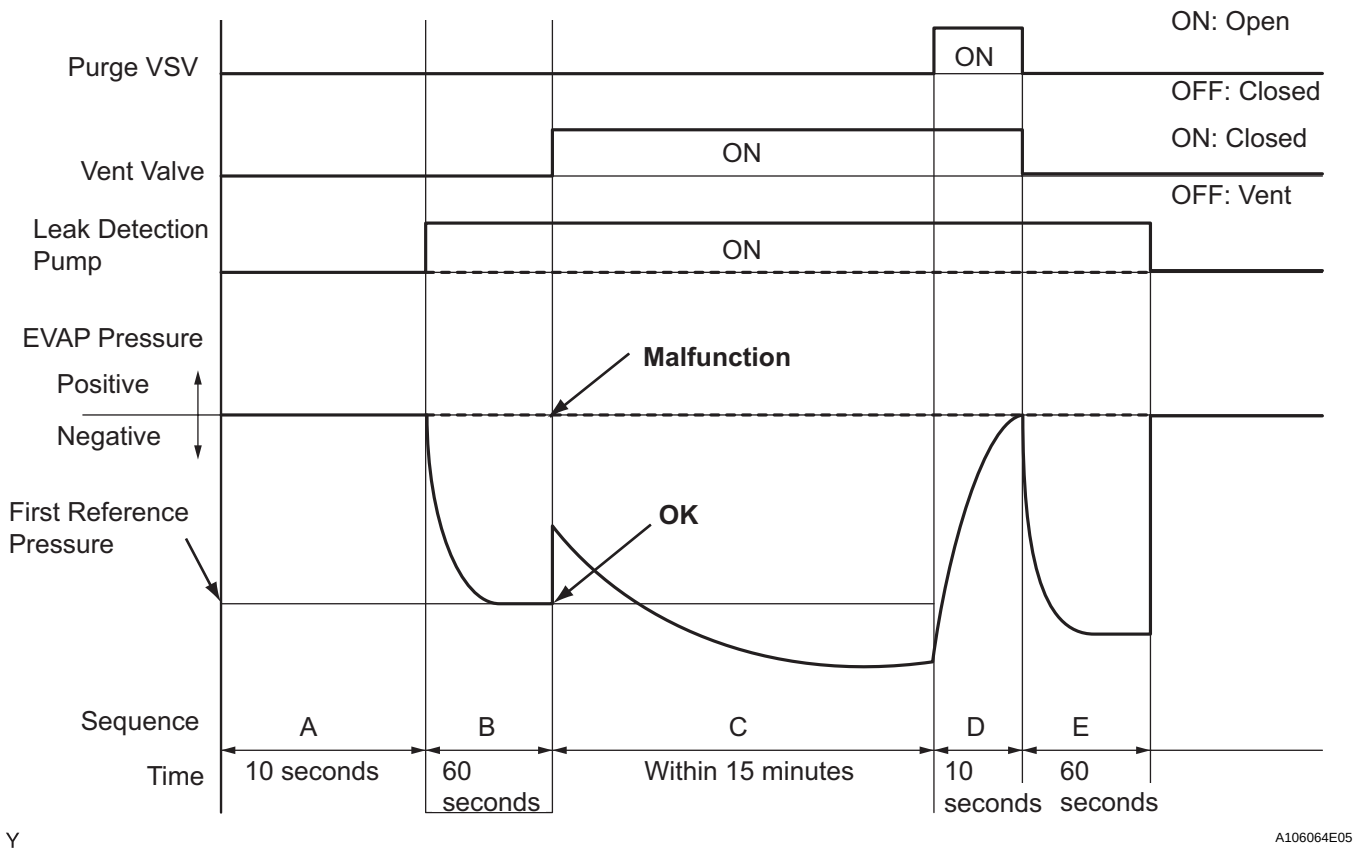

ES

2. P2402: Leak detection pump stuck ON
   In operation B, the leak detection pump creates negative pressure (a vacuum) through the reference orifice. The EVAP (Evaporative Emission) system pressure is then measured by the ECM, using the canister pressure sensor, to determine the reference pressure. If the pressure is higher than -1.057 kPa-g (-7.93 mmHg-g), or lower than -4.85 kPa-g (-36.4 mmHg-g), the ECM interprets this as the leak detection pump being stuck ON (remaining ON all the time). The ECM illuminates the MIL and sets the DTC (2 trip detection logic).

EVAP Pressure when Leak Detection Pump Stuck ON:

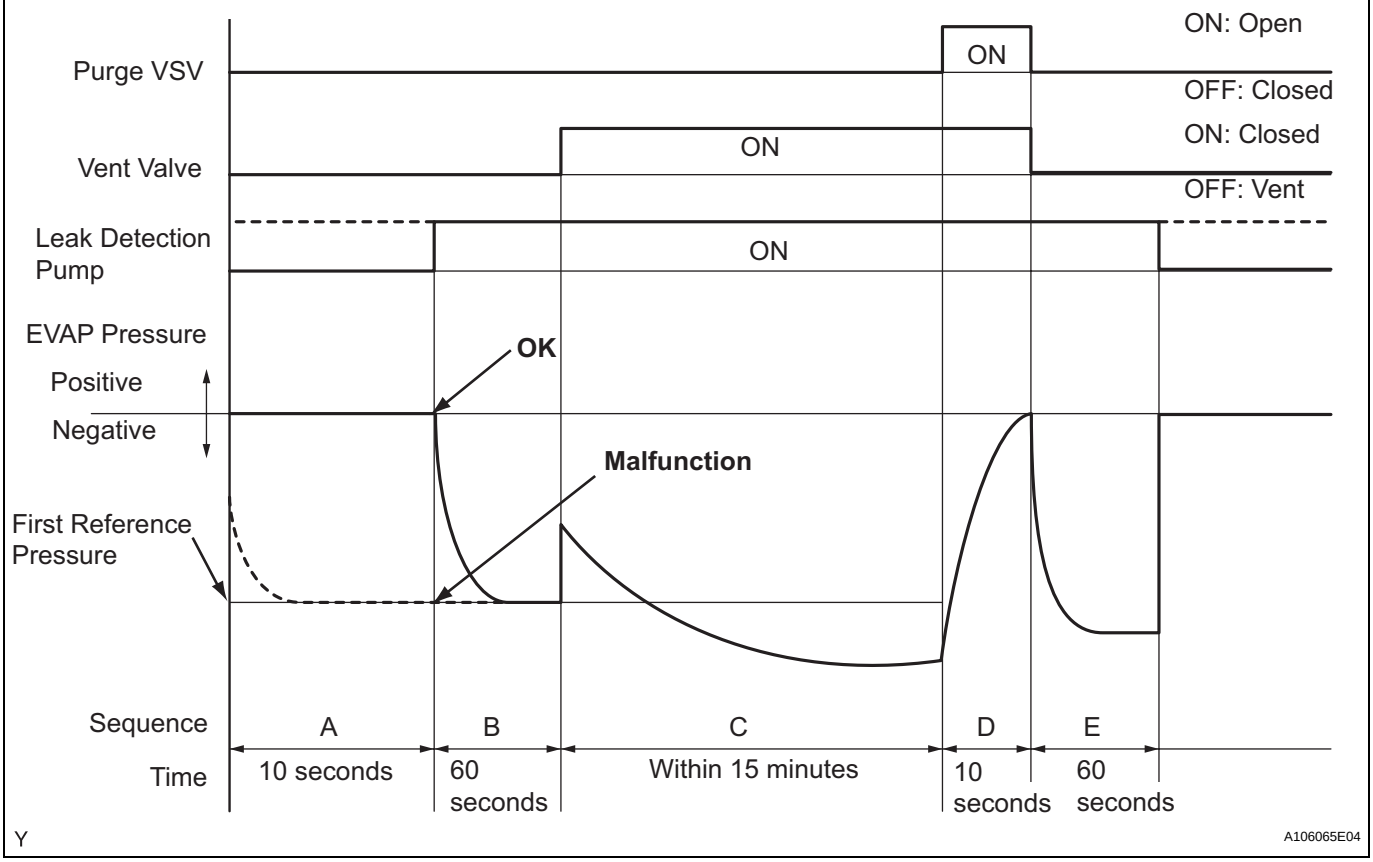

HINT:
The detection logic of DTCs P2401 and P2402 is the same because in both cases the reference pressure measured in operation B is compared to the atmospheric pressure registered in operation A. The ECM calculates the difference between these pressures by deducting [the reference pressure] from [the stored atmospheric pressure], and uses this to monitor the EVAP system pressure change.

MONITOR STRATEGY

Required Sensors/Components	Purge VSV and canister pump module
Frequency of Operation	Once per driving cycle
Duration	Within 2 minutes (varies with amount of fuel in tank)
MIL Operation	2 driving cycles
Sequence of Operation	None

TYPICAL ENABLING CONDITIONS

Monitor runs whenever following DTCs not present	None
EVAP key-off monitor runs when all of following conditions met	-
Atmospheric pressure	76 to 110 kPa-a (570 to 825 mmHg-a)
Battery voltage	10.5 V or more

Vehicle speed	Below 2.5 mph (4 km/h)
Ignition switch	OFF
Time after key off	5 or 7 or 9.5 hours
Canister pressure sensor malfunction (P0450, P0451, P0452 and P0453)	Not detected
Purge VSV	Not operated by scan tool
Vent valve	Not operated by scan tool
Leak detection pump	Not operated by scan tool
Both of following conditions met before key off	Conditions 1 and 2
1. Duration that vehicle driven	5 minutes or more
2. EVAP purge operation	Performed
ECT	4.4° to 35°C (40° to 95°F)
IAT	4.4°to 35°C (40° to 95°F)

1. Key-off monitor sequence 1 to 8

1. Atmospheric pressure measurement

Next sequence run if following condition set	-
Atmospheric pressure change	Less than 0.3 kPa-g (2.25 mmHg-g) in 1 second

2. First reference pressure measurement

Next sequence run if all of following conditions set	Condition 1, 2 and 3
1. EVAP pressure just after reference pressure measurement start	-1 kPa-g (-7.5 mmHg-g) or less
2. Reference pressure	-4.85 to -1.057 kPa-g (-36.4 to -7.93 mmHg-g)
3. Reference pressure	Saturated within 60 seconds

3. Vent valve stuck closed check

Next sequence run if following condition set	-
EVAP pressure change after vent valve ON (closed)	0.3 kPa-g (2.25 mmHg-g) or more

4. Vacuum introduction

Next sequence run if following condition set	-
EVAP pressure	Saturated within 15 minutes

5. Purge VSV stuck closed check

Next sequence run if following condition set	-
EVAP pressure change after purge VSV ON (open)	0.3 kPa-g (2.25 mmHg-g) or more

6. Second reference pressure measurement

Next sequence run if all of following conditions set	Condition 1, 2, 3 and 4
1. EVAP pressure just after reference pressure	-1 kPa-g (-7.5 mmHg-g) or less
2. Reference pressure	-4.85 to -1.057 kPa-g (-36.4 to -7.93 mmHg-g)
3. Reference pressure	Saturated within 60 seconds
4. Reference pressure difference between first and second	Less than 0.7 kPa-g (5.25 mmHg-g)

7. Leak check

Next sequence run if following condition set	-
EVAP pressure when vacuum introduction complete	Second reference pressure or less

8. Atmospheric pressure measurement

EVAP monitor complete if following condition set	-
Atmospheric pressure difference between sequence 1 and 8	Within 0.3 kPa-g (2.25 mmHg-g)

TYPICAL MALFUNCTION THRESHOLDS

"Saturated" indicates that the EVAP pressure change is less than 0.286 kPa-g (2.14 mmHg-g) in 60 seconds.

One of following conditions met	-
EVAP pressure just after reference pressure measurement start	More than -1 kPa-g (-7.5 mmHg-g)
Reference pressure	Less than -4.85 kPa-g (-36.4 mmHg-g)
Reference pressure	-1.057 kPa-g (-7.93 mmHg-g) or more
Reference pressure	Not saturated within 60 seconds
Reference pressure difference between first and second	0.7 kPa-g (5.25 mmHg-g) or more

MONITOR RESULT

Refer to CHECKING MONITOR STATUS (See page ES-17).

DTC	P2419	Evaporative Emission System Switching Valve Control Circuit Low

DTC	P2420	Evaporative Emission System Switching Valve Control Circuit High

DTC SUMMARY

DTCs	Monitoring Items	Malfunction Detection Conditions	Trouble Areas	Detection Timings	Detection Logic
P2419	Vent valve stuck closed	P043E, P043F, P2401, P2402 and P2419 present when one of following conditions met during key-off EVAP monitor: • EVAP pressure just after reference pressure measurement greater than -1 kPa-g (-7.5 mmHg-g) • Reference pressure less than -4.85 kPa-g (-36.4 mmHg-g) • Reference pressure greater than -1.057 kPa-g (-7.93 mmHg-g) • Reference pressure not saturated • Reference pressure difference between first and second 0.7 kPa-g (5.25 mmHg-g) or more HINT: Typical example values	• Canister pump module (Reference orifice, leak detection pump, vent valve) • Connector/wire harness (Canister pump module - ECM) • EVAP system hose (pipe from air inlet port to canister pump module, canister filter, fuel tank vent hose) • ECM	While ignition switch OFF	2 trip
P2420	Vent valve stuck open (vent)	Following condition met during key-off EVAP monitor: • EVAP pressure change when vent valve closed (ON) less than 0.3 kPa-g (2.25 mmHg-g)	• Canister pump module (Reference orifice, leak detection pump, vent valve) • Connector/wire harness (Canister pump module - ECM) • ECM	While ignition switch OFF	2 trip

HINT:
The vent valve is built into the canister pump module.

DESCRIPTION

The description can be found in the EVAP (Evaporative Emission) System (See page ES-319).

INSPECTION PROCEDURE

Refer to the EVAP System (See page ES-324).

MONITOR DESCRIPTION

5 hours* after the ignition switch is turned to OFF, the leak detection pump creates negative pressure (vacuum) in the EVAP system. The ECM monitors for leaks and actuator malfunctions based on the EVAP pressure.
HINT:
*: If the engine coolant temperature is not below 35°C (95°F) 5 hours after the ignition switch is turned to OFF, the monitor check starts 2 hours later. If it is still not below 35°C (95°F) 7 hours after the ignition switch is turned to OFF, the monitor check starts 2.5 hours later.

Sequence	Operations	Descriptions	Duration
-	ECM activation	Activated by soak timer, 5 hours (7 or 9.5 hours) after ignition switch turned to OFF.	-

ES

Sequence	Operations	Descriptions	Duration
A	Atmospheric pressure measurement	Vent valve turned OFF (vent) and EVAP system pressure measured by ECM in order to register atmospheric pressure. If pressure in EVAP system not between 76 kPa-a and 110 kPa-a (570 mmHg-a and 825 mmHg-a), ECM cancels EVAP system monitor.	10 seconds
B	First reference pressure measurement	In order to determine reference pressure, leak detection pump creates negative pressure (vacuum) through reference orifice and then ECM checks if leak detection pump and vent valve operate normally.	60 seconds
C	EVAP system pressure measurement	Vent valve turned ON (closed) to shut EVAP system. Negative pressure (vacuum) created in EVAP system, and EVAP system pressure then measured. Write down measured value as will be used in leak check. If EVAP pressure does not stabilize within 15 minutes, ECM cancels EVAP system monitor.	15 minutes*
D	Purge VSV monitor	Purge VSV opened and then EVAP system pressure measured by ECM. Large increase indicates normality.	10 seconds
E	Second reference pressure measurement	After second reference pressure measurement, leak check performed by comparing first and second reference pressure. If stabilized system pressure higher than second reference pressure, ECM determines that EVAP system leaking.	60 seconds
F	Final check	Atmospheric pressure measured and then monitoring result recorded by ECM.	-

* If only a small amount of fuel is in the fuel tank, it takes longer for the EVAP pressure to stabilize.

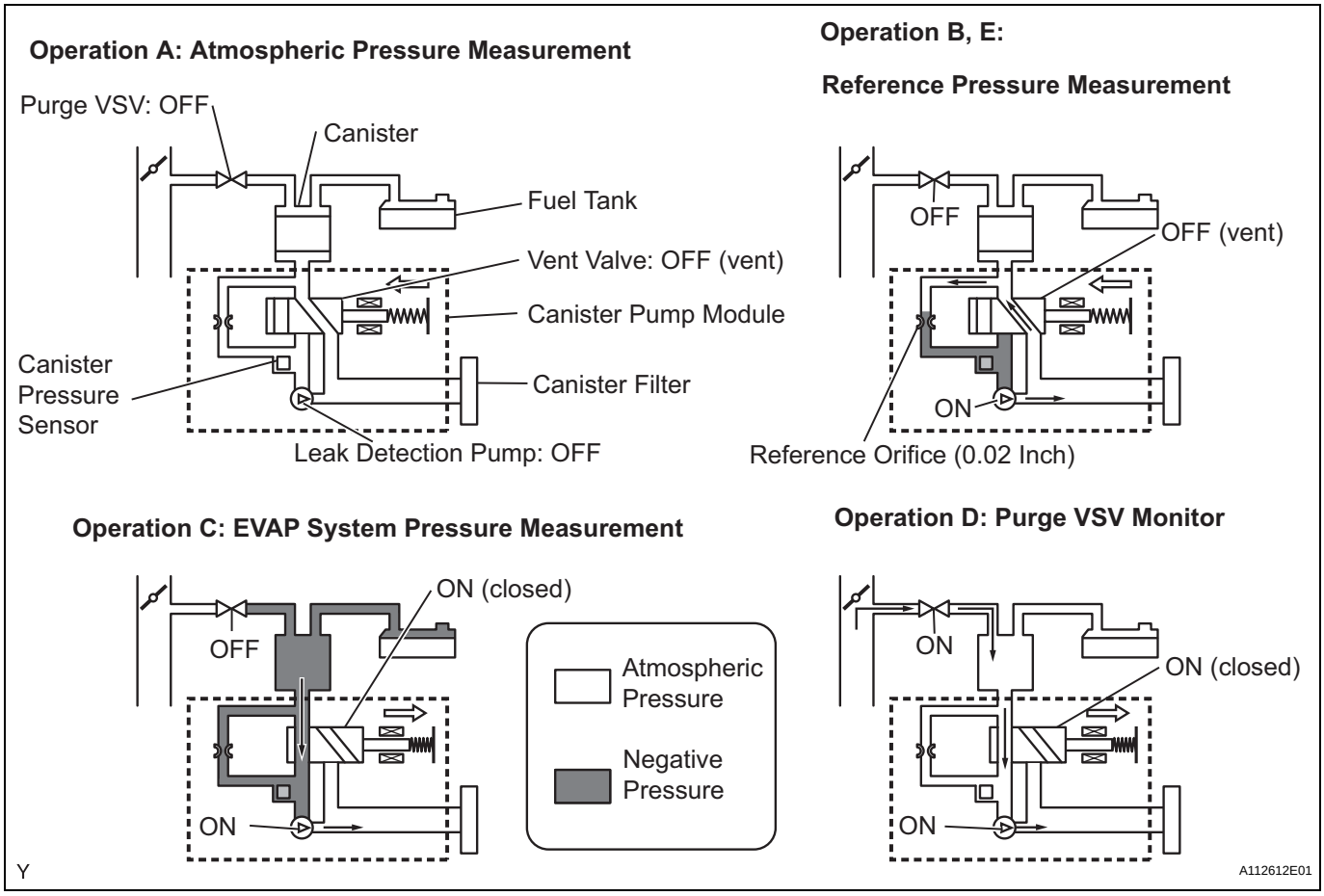

1. P2419: Vent valve stuck closed
   In operation B, the leak detection pump creates negative pressure (a vacuum) through the reference orifice. The EVAP system pressure is then measured by the ECM, using the canister pressure sensor, to determine the reference pressure. If the pressure exceeds -1.057 kPa-g (-7.93 mmHg-g) 4 seconds after the leak detection pump is turned ON, the ECM interprets this as the vent valve being stuck closed.
   The ECM illuminates the MIL and sets the DTC (2 trip detection logic).

EVAP Pressure when Vent Valve Stuck ON:

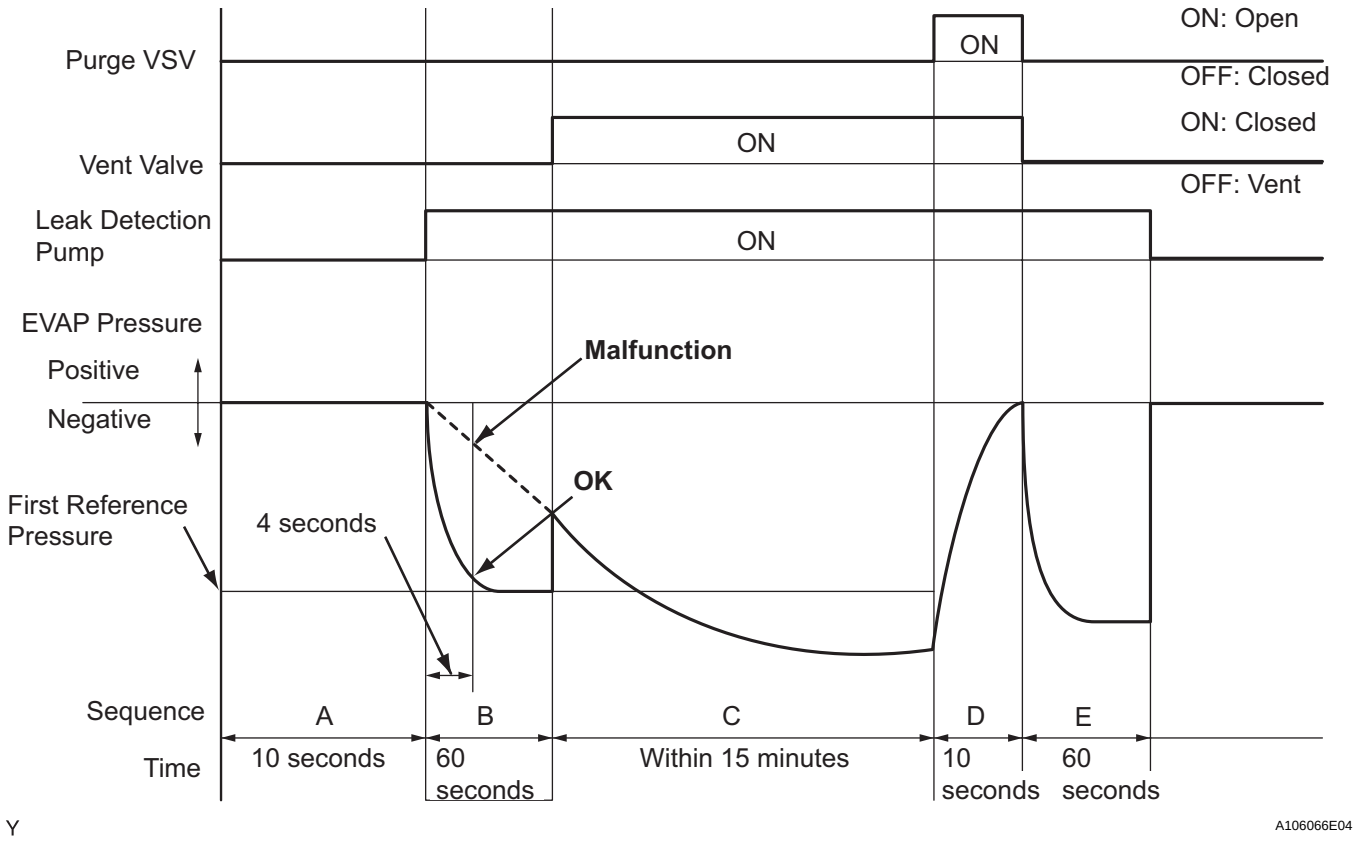

2. P2420: Vent valve stuck open (vent)
   In operation C, the vent valve turns ON (closes) and the EVAP system pressure is then measured by the ECM, using the canister pressure sensor, to conduct an EVAP leak check. If the pressure does not increase when the vent valve is open, the ECM interprets this as the vent valve being stuck open. The ECM illuminates the MIL and sets the DTC.

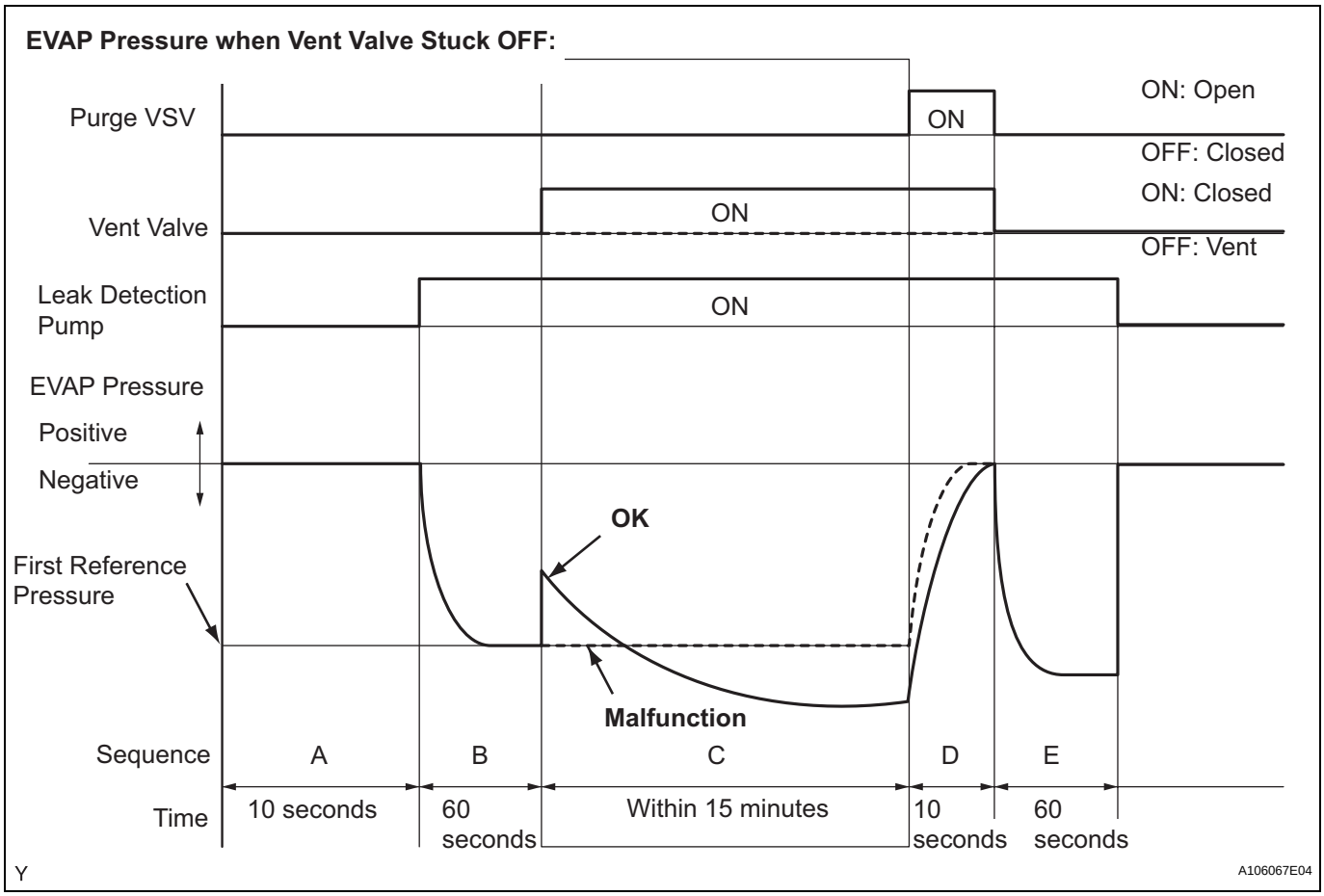

MONITOR STRATEGY

Required Sensors/Components	Purge VSV and canister pump module
Frequency of Operation	Once per driving cycle
Duration	Within 15 minutes (varies with amount of fuel in tank)
MIL Operation	2 driving cycles
Sequence of Operation	None

TYPICAL ENABLING CONDITIONS

Monitor runs whenever following DTCs not present	None
EVAP key-off monitor runs when all of following conditions met	-
Atmospheric pressure	76 to 110 kPa-a (570 to 825 mmHg-a)
Battery voltage	10.5 V or more
Vehicle speed	Below 2.5 mph (4 km/h)
Ignition switch	OFF
Time after key off	5 or 7 or 9.5 hours
Canister pressure sensor malfunction (P0450, P0451, P0452 and P0453)	Not detected
Purge VSV	Not operated by scan tool
Vent valve	Not operated by scan tool

Leak detection pump	Not operated by scan tool
Both of following conditions met before key off	Conditions 1 and 2
1. Duration that vehicle driven	5 minutes or more
2. EVAP purge operation	Performed
ECT	4.4° to 35°C (40° to 95°F)
IAT	4.4°to 35°C (40° to 95°F)

1. Key-off monitor sequence 1 to 8

1. Atmospheric pressure measurement

Next sequence run if following condition set	-
Atmospheric pressure change	Less than 0.3 kPa-g (2.25 mmHg-g) in 1 second

2. First reference pressure measurement

Next sequence run if all of following conditions set	Condition 1, 2 and 3
1. EVAP pressure just after reference pressure measurement start	-1 kPa-g (-7.5 mmHg-g) or less
2. Reference pressure	-4.85 to -1.057 kPa-g (-36.4 to -7.93 mmHg-g)
3. Reference pressure	Saturated within 60 seconds

ES

3. Vent valve stuck closed check

Next sequence run if following condition set	-
EVAP pressure change after vent valve ON (closed)	0.3 kPa-g (2.25 mmHg-g) or more

4. Vacuum introduction

Next sequence run if following condition set	-
EVAP pressure	Saturated within 15 minutes

5. Purge VSV stuck closed check

Next sequence run if following condition set	-
EVAP pressure change after purge VSV ON (open)	0.3 kPa-g (2.25 mmHg-g) or more

6. Second reference pressure measurement

Next sequence run if all of following conditions set	Condition 1, 2, 3 and 4
1. EVAP pressure just after reference pressure	-1 kPa-g (-7.5 mmHg-g) or less
2. Reference pressure	-4.85 to -1.057 kPa-g (-36.4 to -7.93 mmHg-g)
3. Reference pressure	Saturated within 60 seconds
4. Reference pressure difference between first and second	Less than 0.7 kPa-g (5.25 mmHg-g)

7. Leak check

Next sequence run if following condition set	-
EVAP pressure when vacuum introduction complete	Second reference pressure or less

8. Atmospheric pressure measurement

EVAP monitor complete if following condition set	-
Atmospheric pressure difference between sequence 1 and 8	Within 0.3 kPa-g (2.25 mmHg-g)

TYPICAL MALFUNCTION THRESHOLDS

"Saturated" indicates that the EVAP pressure change is less than 0.286 kPa-g (2.14 mmHg-g) in 60 seconds.

P2419: Vent valve stuck closed

One of following conditions set	-
EVAP pressure just after reference pressure measurement start	More than -1 kPa-g (-7.5 mmHg-g)
Reference pressure	Less than -4.85 kPa-g (-36.4 mmHg-g)
Reference pressure	-1.057 kPa-g (-7.93 mmHg-g) or more
Reference pressure	Not saturated within 60 seconds

Reference pressure difference between first and second	0.7 kPa-g (5.25 mmHg-g) or more

P2420: Vent valve stuck open (vent)

EVAP pressure change after EVAP canister vent valve ON	Less than 0.3 kPa-g (2.25 mmHg-g)

MONITOR RESULT

Refer to CHECKING MONITOR STATUS (See page ES-17).

DTC	P2610	ECM / PCM Internal Engine Off Timer Performance

DTC SUMMARY

DTC	Monitoring Items	Malfunction Detection Conditions	Trouble Areas	Detection Timings	Detection Logic
P2610	Soak timer (built into ECM)	ECM internal malfunction	ECM	Engine running	2 trip

DESCRIPTION

To ensure the accuracy of the EVAP (Evaporative Emission) monitor values, the soak timer, which is built into the ECM, measures 5 hours (+-15 minutes) from when the ignition switch is turned to OFF, before the monitor is run. This allows the fuel to cool down, which stabilizes the EVAP pressure. When 5 hours have elapsed, the ECM turns on.

ES

Soak Timer Circuit:

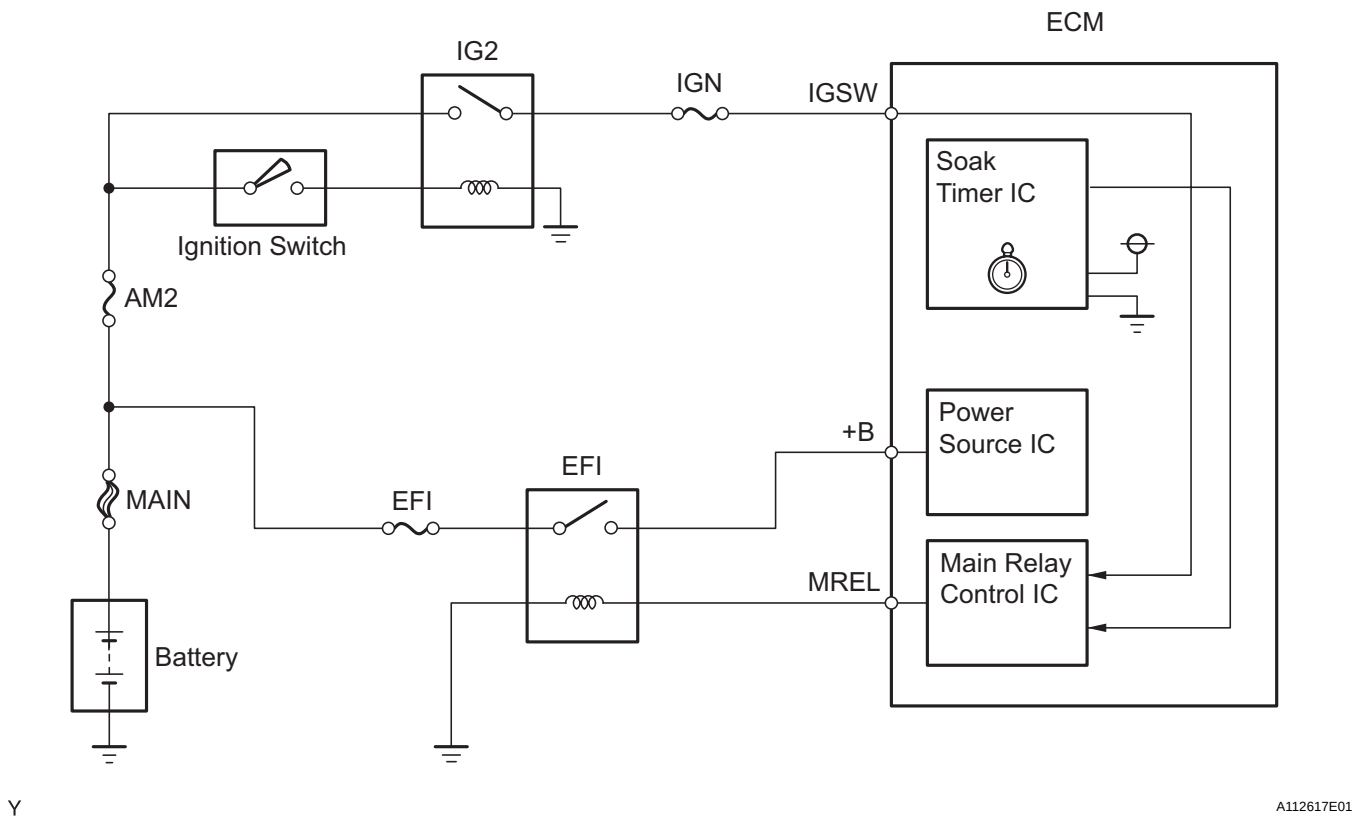

MONITOR DESCRIPTION

5 hours after the ignition switch is turned to OFF, the soak timer activates the ECM to begin the EVAP system monitor. While the engine is running, the ECM monitors the synchronization of the soak timer and the CPU clock. If these two are not synchronized, the ECM interprets this as a malfunction, illuminates the MIL and sets the DTC (2 trip detection logic).

MONITOR STRATEGY

Required Sensors/Components	ECM
Frequency of Operation	Once per driving cycle

Duration	10 minutes
MIL Operation	2 driving cycles
Sequence of Operation	None

TYPICAL ENABLING CONDITIONS

Monitor runs whenever following DTC not present	None
Ignition switch	ON
Engine	Running
Battery voltage	8 V or more
Starter	OFF

TYPICAL MALFUNCTION THRESHOLDS

Soak timer measurement when ECM CPU clock counts 10 minutes	Less than 7 minutes, or more than 13 minutes

INSPECTION PROCEDURE

HINT:

- DTC P2610 is set if an internal ECM problem is detected. Diagnostic procedures are not required. ECM replacement is necessary.
- Read freeze frame data using an intelligent tester. Freeze frame data record the engine condition when malfunctions are detected. When troubleshooting, freeze frame data can help determine if the vehicle was moving or stationary, if the engine was warmed up or not, if the air-fuel ratio was lean or rich, and other data, from the time the malfunction occurred.

1	REPLACE ECM

(a) Replace the ECM (See page ES-431).

NEXT

2	CHECK WHETHER DTC OUTPUT RECURS

(a) Connect an intelligent tester to the DLC3.
(b) Turn the ignition switch to ON.
(c) Turn the tester ON.
(d) Clear DTCs (See page ES-34).
(e) Start the engine and wait for 10 minutes or more.
(f) On the tester, select the following menu items: DIAGNOSIS / ENHANCED OBD II / DTC INFO / PENDING CODES.
(g) If no pending DTC is displayed, the repair has been successfully completed.

NEXT

END

DTC	P2A00	A/F Sensor Circuit Slow Response (Bank 1 Sensor 1)

HINT:
Sensor 1 refers to the sensor mounted in front of the Three-Way Catalytic Converter (TWC) and located near the engine assembly.

DESCRIPTION

Refer to DTC P2195 (See page ES-276).

DTC No.	DTC Detection Conditions	Trouble Areas
P2A00	Calculated value of air-fuel ratio (A/F) sensor response rate deterioration level less than threshold (2 trip detection logic)	• Open or short in A/F sensor circuit • A/F sensor • ECM

ES

MONITOR DESCRIPTION

After the engine is warmed up, the ECM performs air-fuel ratio feedback control to maintain the air-fuel ratio at the stoichiometric level. In addition, active A/F control is performed for approximately 10 seconds after the preconditions are met in order to measure the A/F sensor response rate. During active A/F control, the ECM forcibly increases and decreases the injection volume a certain amount, based on the stoichiometric air-fuel ratio learned during normal air-fuel ratio control, and measures the A/F sensor response rate. The ECM receives a signal from the A/F sensor while performing active A/F control and uses it to calculate the A/F sensor response rate deterioration level.
If the A/F sensor response rate deterioration level is less than the threshold, the ECM interprets this as a malfunction and sets the DTC.

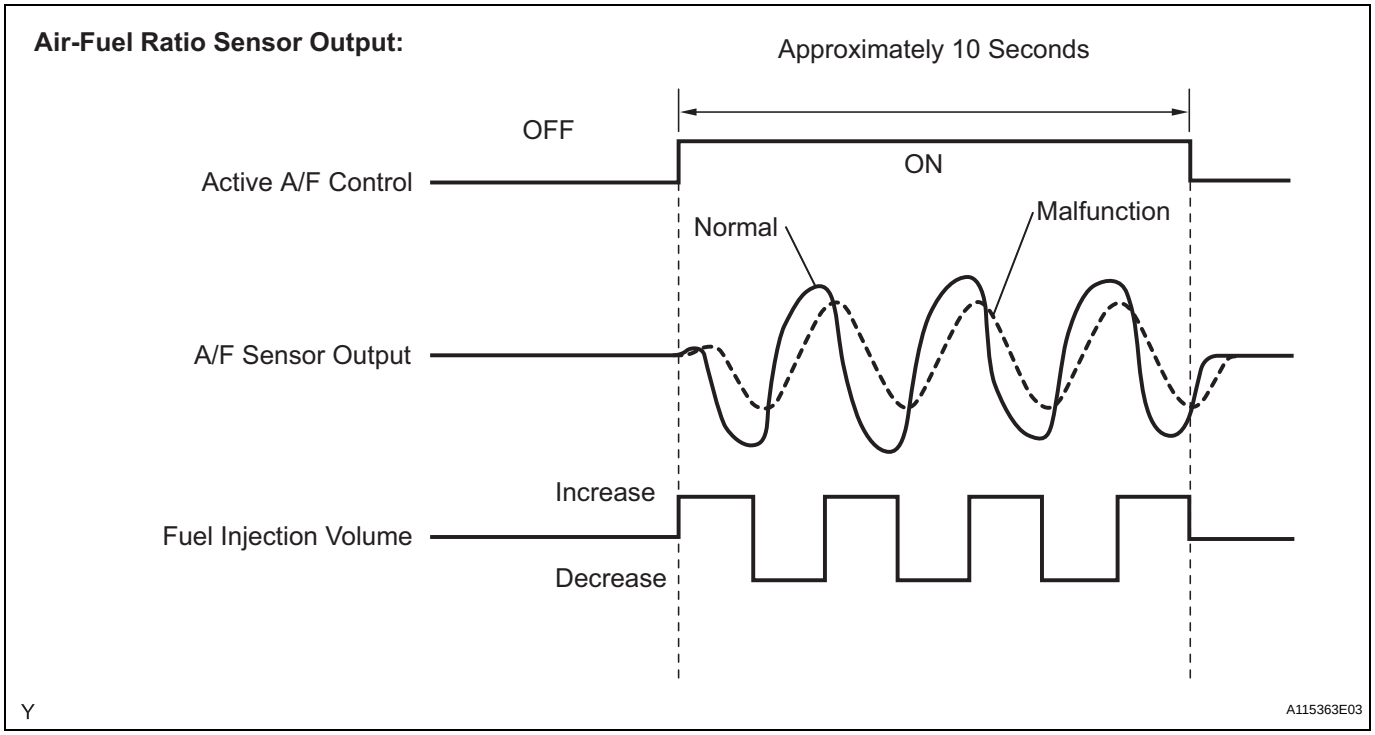

CONFIRMATION DRIVING PATTERN

HINT:
Performing this confirmation pattern will activate the A/F sensor response monitor.

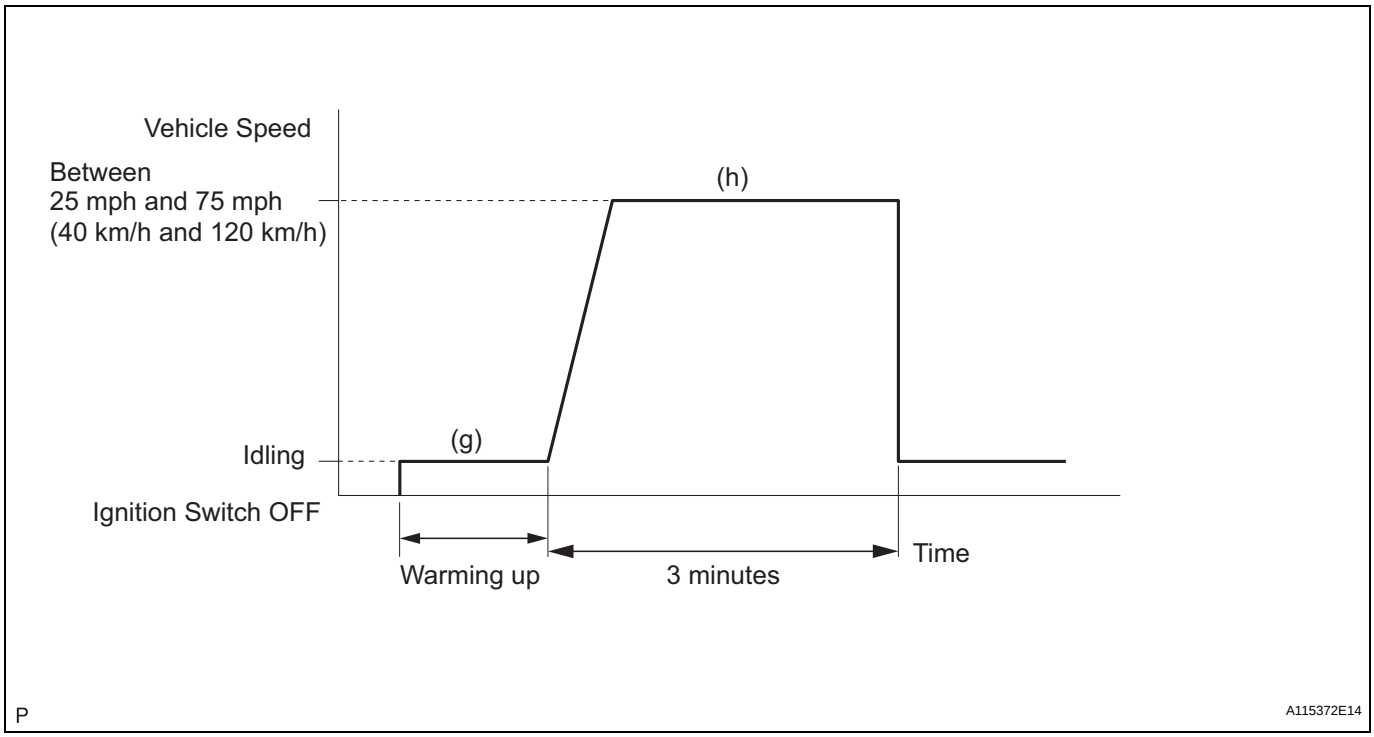

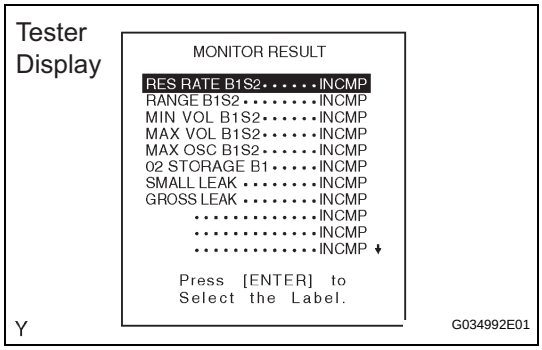

(a) Connect an intelligent tester to the DLC3.
(b) Turn the ignition switch to ON.
(c) Turn the tester ON.
(d) Clear DTCs (where set) (See page ES-34).
(e) Select the following menu items: DIAGNOSIS / ENHANCED OBD II / MONITOR INFO / MONITOR RESULT.
(f) Check that RES RATE B1S1 is INCOMP.
(g) Start the engine and warm it up.
(h) Drive the vehicle at a constant speed of between 25 mph and 75 mph (40 km/h and 120 km/h) for 3 minutes.
(i) Check the monitor result values on the intelligent tester by selecting the following menu items: DIAGNOSIS / ENHANCED OBD II / MONITOR INFO / MONITOR RESULT / RES RATE B1S1.
(j) If the values indicated on the tester do not change, perform READINESS MONITOR DRIVE PATTERN for the A/F sensor and the heated oxygen sensor (See page ES-19).
HINT:
Completion of all A/F sensor monitors is required to change the value in RES RATE B1S1.
(k) Note the value of the RES RATE B1S1.
(l) Select the following menu items: DIAGNOSIS / ENHANCED OBD II / DTC INFO / PENDING CODES.
(m) Check if any DTCs (any pending DTCs) are set.

MONITOR STRATEGY

Related DTCs	P2A00: Air-Fuel Ratio (A/F) sensor slow response
Required Sensors/Components (Main)	A/F sensor
Required Sensors/Components (Related)	Vehicle speed sensor, Crankshaft position sensor
Frequency of Operation	Once per driving cycle
Duration	10 to 15 seconds
MIL Operation	2 driving cycles
Sequence of Operation	None

TYPICAL ENABLING CONDITIONS

Monitor runs whenever following DTCs not present	P0031, 32 (A/F Sensor heater - Sensor 1) P0100 - P0103 (MAF meter) P0110 - P0113 (IAT sensor) P0115 - P0118 (ECT sensor) P0120 - P0223, P2135 (TP sensor) P0125 (Insufficient ECT for Closed Loop) P0171, P0172 (Fuel system) P0300 - P0304 (Misfire) P0335 (CKP sensor) P0340 (CMP sensor) P0455, P0456 (EVAP system) P0500 (VSS) P2196 (A/F Sensor - rationality)
Active A/F control	Performing
Active A/F control performed when following conditions met	-
Engine coolant temperature	75°C (167°F) or more
Battery voltage	11 V or more
Idle	OFF
Engine RPM	Less than 4,000 rpm
A/F sensor status	Activated
Fuel-cut	OFF
Engine load	10 to 70 %
Shift position	2 or more
Catalyst monitor	Not yet
Intake air amount	4 to 17 g/sec

TYPICAL MALFUNCTION THRESHOLDS

Response rate deterioration level	Less than 0.15 V

MONITOR RESULT

Refer to CHECKING MONITOR STATUS (See page ES-17).

ES

WIRING DIAGRAM

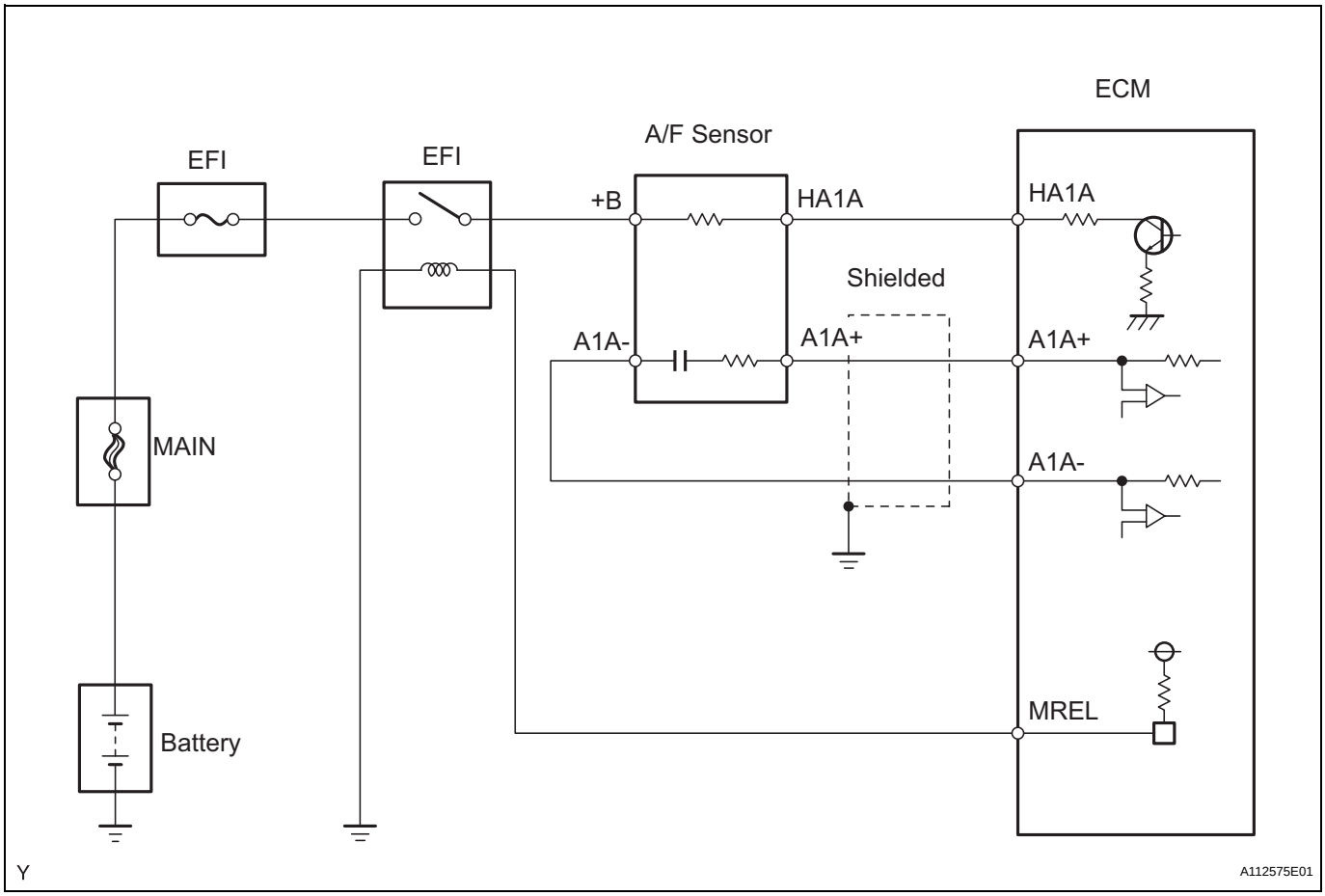

INSPECTION PROCEDURE

HINT:
Intelligent tester only:
Malfunctioning areas can be identified by performing the A/F CONTROL function provided in the ACTIVE TEST. The A/F CONTROL function can help to determine whether the Air-Fuel Ratio (A/F) sensor, Heated Oxygen (HO2) sensor and other potential trouble areas are malfunctioning.
The following instructions describe how to conduct the A/F CONTROL operation using an intelligent tester.
(a) Connect an intelligent tester to the DLC3.
(b) Start the engine and turn the tester ON.
(c) Warm up the engine at an engine speed of 2,500 rpm for approximately 90 seconds.
(d) On the tester, select the following menu items: DIAGNOSIS / ENHANCED OBD II / ACTIVE TEST / A/F CONTROL.
(e) Perform the A/F CONTROL operation with the engine idling (press the RIGHT or LEFT button to change the fuel injection volume).
(f) Monitor the voltage outputs of the A/F and HO2 sensors (AFS B1 S1 and O2S B1 S2) displayed on the tester.
HINT:
- The A/F CONTROL operation lowers the fuel injection volume by 12.5 % or increases the injection volume by 25 %.

- The sensors react in accordance with increases and decreases in the fuel injection volume.

Standard

Tester Display (Sensor)	Injection Volumes	Status	Voltages
AFS B1 S1 (A/F)	+25 %	Rich	Less than 3.0
	-12.5 %	Lean	More than 3.35
O2S B1 S2 (HO2)	+25 %	Rich	More than 0.5
	-12.5 %	Lean	Less than 0.4

NOTICE:
The A/F sensor has an output delay of a few seconds and the HO2 sensor has a maximum output delay of approximately 20 seconds.

Case	A/F Sensor (Sensor 1) Output Voltage		HO2 Sensor (Sensor 2) Output Voltage		Main Suspected Trouble Areas
1	Injection Volume +25 % -12.5 %		Injection Volume +25 % -12.5 %		-
	Output Voltage More than 3.35 V Less than 3.0 V	OK	Output Voltage More than 0.5 V Less than 0.4 V	OK	
2	Injection Volume +25 % -12.5 %		Injection Volume +25 % -12.5 %		• A/F sensor • A/F sensor heater • A/F sensor circuit
	Output Voltage Almost no reaction	NG	Output Voltage More than 0.5 V Less than 0.4 V	OK	
3	Injection Volume +25 % -12.5 %		Injection Volume +25 % -12.5 %		• HO2 sensor • HO2 sensor heater • HO2 sensor circuit
	Output Voltage More than 3.35 V Less than 3.0 V	OK	Output Voltage Almost no reaction	NG	
4	Injection volume +25 % -12.5 %		Injection Volume +25 % -12.5 %		• Injector • Fuel pressure • Gas leakage from exhaust system (Air-fuel ratio extremely lean or rich)
	Output Voltage Almost no reaction	NG	Output voltage Almost no reaction	NG	

Following the A/F CONTROL procedure enables technicians to check and graph the voltage outputs of both the A/F and HO2 sensors.
To display the graph, select the following menu items on the tester: DIAGNOSIS / ENHANCED OBD II / ACTIVE TEST / A/F CONTROL / USER DATA / AFS B1 S1 and O2S B1 S2, and press the YES button and then the ENTER button followed by the F4 button.
HINT:
- DTC P2A00 may be set, when the air-fuel ratio is stuck rich or lean.
- A low A/F sensor voltage could be caused by a rich air-fuel mixture. Check for conditions that would cause the engine to run rich.
- A high A/F sensor voltage could be caused by a lean air-fuel mixture. Check for conditions that would cause the engine to run lean.

- Read freeze frame data using an intelligent tester. Freeze frame data record the engine condition when malfunctions are detected. When troubleshooting, freeze frame data can help determine if the vehicle was moving or stationary, if the engine was warmed up or not, if the air-fuel ratio was lean or rich, and other data, from the time the malfunction occurred.

1 CHECK ANY OTHER DTCS OUTPUT (IN ADDITION TO DTC P2A00)

(a) Connect an intelligent tester to the DLC3.
(b) Turn the ignition switch to ON.
(c) Turn the tester ON.
(d) Select the following menu items: DIAGNOSIS / ENHANCED OBD II / DTC INFO / CURRENT CODES.
(e) Read DTCs.

Result

Display (DTC Output)	Proceed To
P2A00	A
P2A00 and other DTCs	B

If any DTCs relating to the A/F sensor (DTCs for the A/F sensor heater or A/F sensor admittance) are output, troubleshoot those DTCs first.

B → **GO TO DTC CHART**

A

2 INSPECT AIR FUEL RATIO SENSOR (HEATER RESISTANCE) (See page ES-77)

NG → **REPLACE AIR FUEL RATIO SENSOR**

OK

3 CHECK HARNESS AND CONNECTOR (ECM - AIR FUEL RATIO SENSOR) (See page ES-294)

NG → **REPAIR OR REPLACE HARNESS OR CONNECTOR**

OK

4 PERFORM CONFIRMATION DRIVING PATTERN

NEXT

5 CHECK WHETHER DTC OUTPUT RECURS (DTC P2A00)

(a) Connect the intelligent tester to the DLC3.
(b) Turn the ignition switch to ON and turn the tester ON.
(c) Select the following menu items: DIAGNOSIS / ENHANCED OBD II / DTC INFO / PENDING CODES.

(d) Read pending DTCs.

Result

Display (DTC Output)	Proceed To
P2A00	A
No output	B

B → **CHECK FOR INTERMITTENT PROBLEMS**

A

6 REPLACE AIR FUEL RATIO SENSOR

NEXT

7 PERFORM CONFIRMATION DRIVING PATTERN

NEXT

8 CHECK WHETHER DTC OUTPUT RECURS (DTC P2A00)

(a) Connect the intelligent tester to the DLC3.
(b) Turn the ignition switch to ON and turn the tester ON.
(c) Select the following menu items: DIAGNOSIS / ENHANCED OBD II / DTC INFO / PENDING CODES.
(d) Read pending DTCs.

Result

Display (DTC Output)	Proceed To
No output	A
P2A00	B

B → **REPLACE ECM**

A

END

EVAP System

RELATED DTCS

DTCs	Monitoring Items	See page
P043E	Reference orifice clogged (built into canister pump module)	ES-187
P043F	Reference orifice high-flow (built into canister pump module)	
P0441	• Purge VSV (Vacuum Switching Valve) stuck closed • Purge VSV stuck open • Purge flow	ES-192
P0450	Canister pressure sensor (built into canister pump module) voltage abnormal fluctuation	ES-199
P0451	• Canister pressure sensor (built into canister pump module) noise • Canister pressure sensor (built into canister pump module) signal becomes fixed/flat	
P0452	Canister pressure sensor (built into canister pump module) voltage low	
P0453	Canister pressure sensor (built into canister pump module) voltage high	
P0455	EVAP gross leak	ES-209
P0456	EVAP small leak	
P2401	Leak detection pump stuck OFF (built into canister pump module)	ES-296
P2402	Leak detection pump stuck ON (built into canister pump module)	
P2419	Vent valve stuck closed (built into canister pump module)	ES-302
P2420	Vent valve stuck open (vent) (built into canister pump module)	
P2610	Soak timer (built into ECM)	ES-308

If any EVAP system DTCs are set, the malfunctioning area can be determined using the table below.

Malfunctioning Areas \ DTCs	P043E P043F	P0441	P0450	P0451	P0452	P0453	P0455	P0456	P2401 P2402	P2419	P2420
Reference orifice clogged	●								●	●	
Reference orifice high-flow	●								●	●	
Purge VSV stuck open		●					●				
Purge VSV stuck closed		●									
Canister pressure sensor fixed output				●							
Canister pressure sensor noise				●							
Canister pressure sensor low output			●		●						
Canister pressure sensor high output			●			●					
Gross leak		●					●				
Small leak								●			
Leak detection pump stuck OFF	●								●	●	
Leak detection pump stuck ON	●								●	●	
Vent valve stuck closed	●								●	●	
Vent valve stuck open (vent)											●

Y

A106731E11

NOTICE:
If the reference pressure difference between the first and second checks is greater than the specification, all the DTCs relating to the reference pressure (P043E, P043F, P2401, P2402 and P2419) are stored.

ES

DESCRIPTION

Location of EVAP (Evaporative Emission) System:

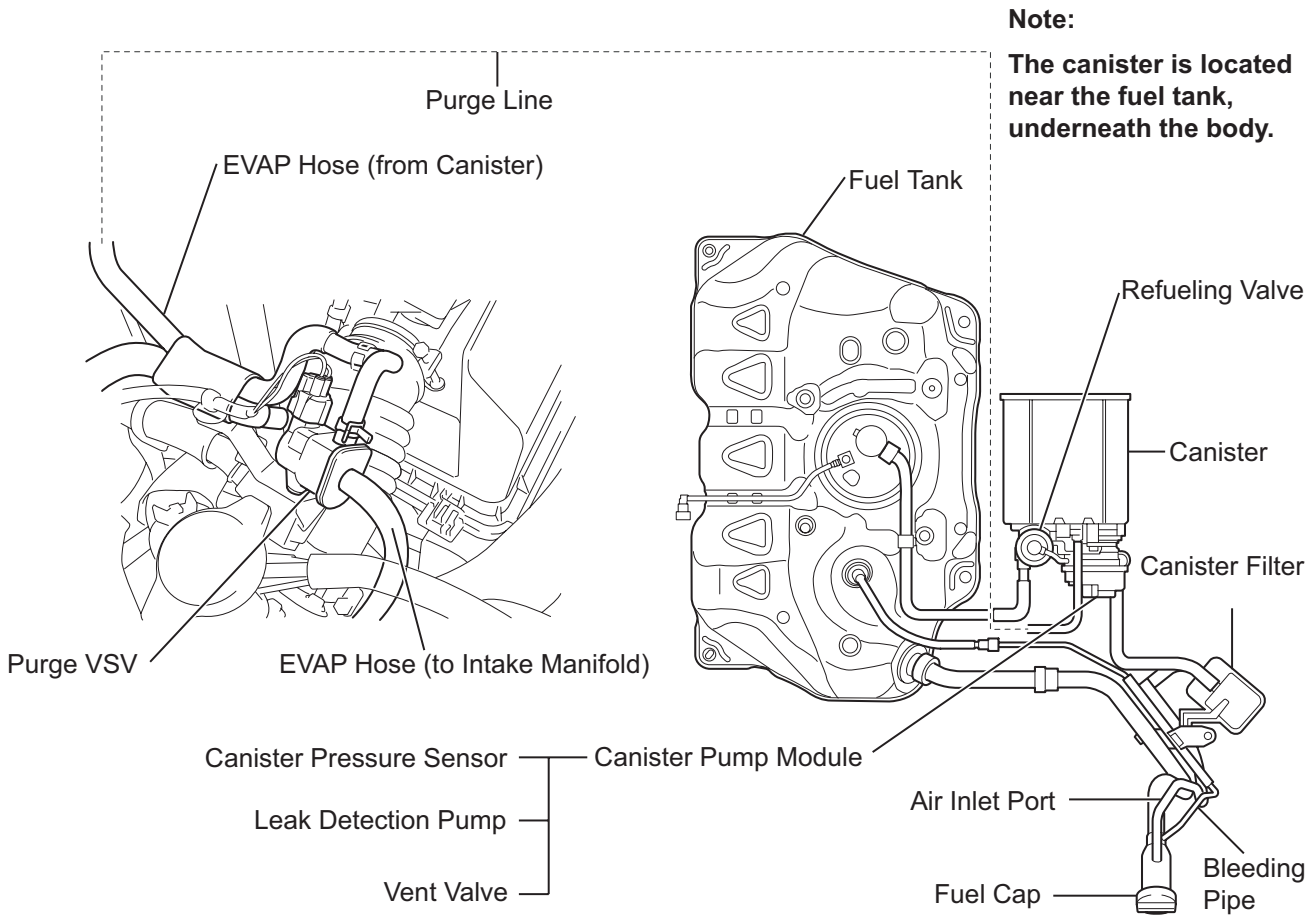

Y

A112623E01

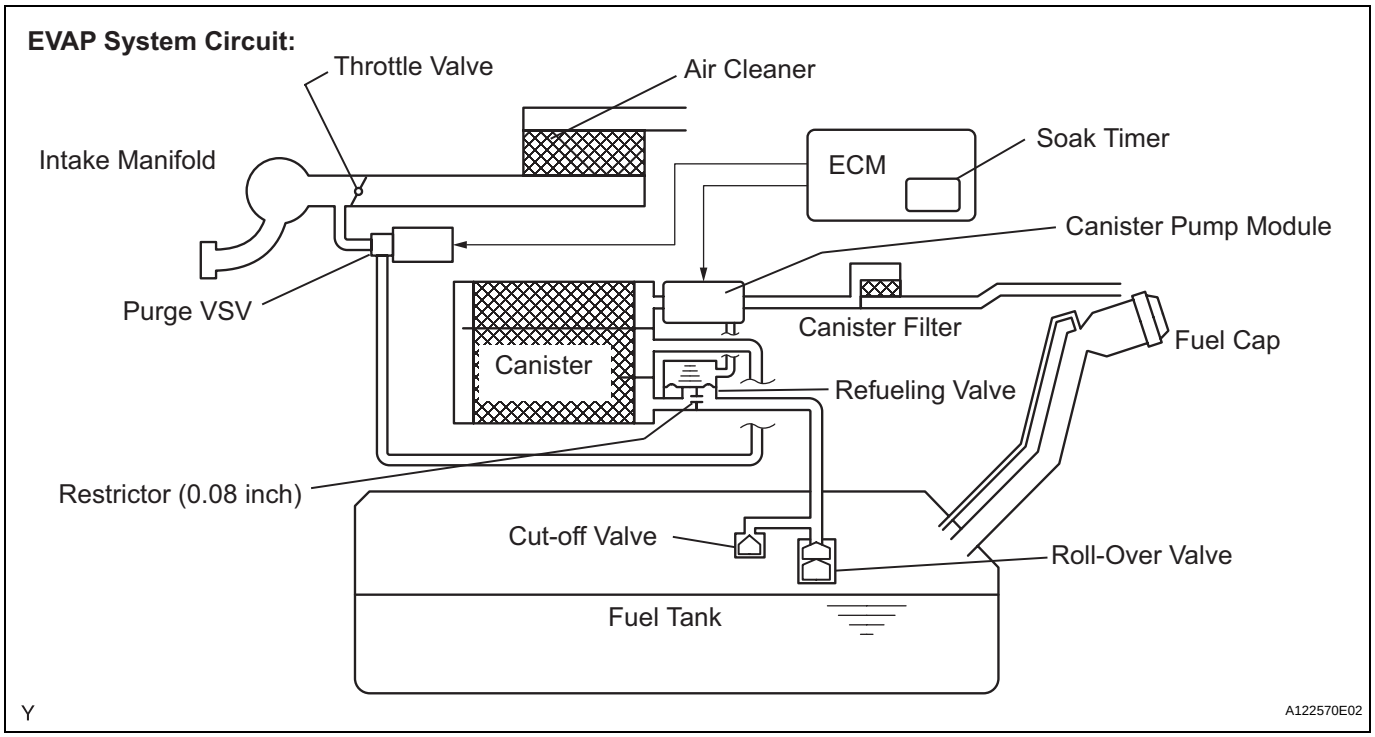

NOTICE:
In this vehicle's EVAP system, turning ON the vent valve does not seal off the EVAP system. To check for leaks in the EVAP system, disconnect the air inlet vent hose and apply pressure from the atmospheric side of the canister.
While the engine is running, if a predetermined condition (closed-loop etc.) is met, the purge VSV is opened by the ECM and stored fuel vapors in the canister are purged into the intake manifold. The ECM changes the duty cycle ratio of the purge VSV to control purge flow volume.
The purge flow volume is also determined by the intake manifold pressure. Atmospheric pressure is allowed into the canister through the vent valve to ensure that the purge flow is maintained when the negative pressure (vacuum) is applied to the canister.
The following two monitors run to confirm the appropriate EVAP system operation.

1. **Key-off monitor**
   This monitor checks for EVAP (Evaporative Emission) system leaks and canister pump module malfunctions. The monitor starts 5 hours* after the ignition switch is turned to OFF. At least 5 hours are required for the fuel to cool down to stabilize the EVAP pressure, thus making the EVAP system monitor more accurate.
   The leak detection pump creates negative pressure (vacuum) in the EVAP system and the pressure is measured. Finally, the ECM monitors for leaks from the EVAP system, and malfunctions in both the canister pump module and purge VSV, based on the EVAP pressure.
   HINT:
   *: If the engine coolant temperature is not below 35°C (95°F) 5 hours after the ignition switch is turned off, the monitor check starts 2 hours later. If it is still not below 35°C (95°F) 7 hours after the ignition switch is turned off, the monitor check starts 2.5 hours later.
2. **Purge flow monitor**
   The purge flow monitor consists of the two monitors. The 1st monitor is conducted every time and the 2nd monitor is activated if necessary.
   - The 1st monitor
     While the engine is running and the purge VSV (Vacuum Switching Valve) is ON (open), the ECM monitors the purge flow by measuring the EVAP pressure change. If negative pressure is not created, the ECM begins the 2nd monitor.

ES

- The 2nd monitor
  The vent valve is turned OFF (open) and the EVAP pressure is measured. If the variation in the pressure is less than 0.5 kPa-g (3.75 mmHg-g), the ECM interprets this as the purge VSV being stuck closed, and illuminates the MIL and sets DTC P0441 (2 trip detection logic).

Atmospheric pressure check:
In order to ensure reliable malfunction detection, the variation between the atmospheric pressures, before and after conduction of the purge flow monitor, is measured by the ECM.

EVAP Purge Flow:

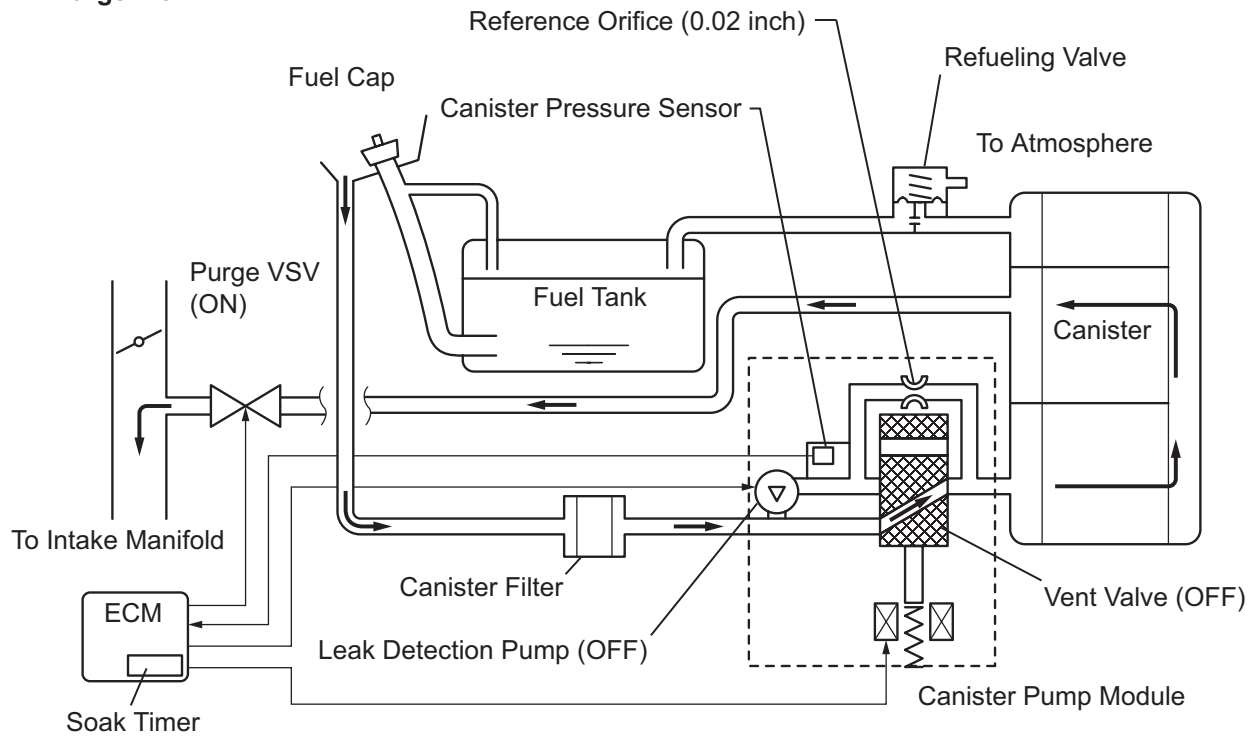

Y

A122571E02

Components	Operations
Canister	Contains activated charcoal to absorb EVAP (Evaporative Emissions) generated in fuel tank.
Cut-off valve	Located in fuel tank. Valve floats and closes when fuel tank 100 % full.
Purge VSV (Vacuum Switching Valve)	Opens or closes line between canister and intake manifold. ECM uses purge VSV to control EVAP purge flow. In order to discharge EVAP absorbed by canister to intake manifold, ECM opens purge VSV. EVAP discharge volume to intake manifold controlled by purge VSV duty cycle ratio (current-carrying time). (Open: ON, Closed: OFF)
Refueling valve	Controls EVAP pressure from fuel tank to canister. Valve consists of diaphragm, spring and restrictor (diameter: 0.08 inch). When fuel vapor and pressure inside fuel tank increase, valve opens. While EVAP purged, valve closes and restrictor prevents large amount of vacuum from affecting pressure in fuel tank. Valve opened while refueling.
Roll-over valve	Located in fuel tank. Valve closed by its own weight when vehicle overturns to prevent fuel from spilling out.
Soak timer	Built into ECM. To ensure accurate EVAP monitor, measures 5 hours (+- 15 min) after ignition switch turned to OFF. This allows fuel to cool down, stabilizing EVAP pressure. When approximately 5 hours elapsed, ECM activates (refer to fig. 3).
Canister pump module	Consists of (a) to (d) below. Canister pump module cannot be disassembled.
(a) Vent valve	Vents and closes EVAP system. When ECM turns valve ON, EVAP system closed. When, ECM turns valve OFF, EVAP system vented. Negative pressure (vacuum) created in EVAP system to check for EVAP leaks by closing purge VSV, turning on vent valve (closed) and operating leak detection pump (refer to fig. 1).
(b) Canister pressure sensor	Indicates pressure as voltages. ECM supplies regulated 5 V to canister pressure sensor, and uses feedback from sensor to monitor EVAP system pressure (refer to fig. 2).

Components	Operations
(c) Leak detection pump	Creates negative pressure (vacuum) in EVAP system for leak check.
(d) Reference orifice	Has opening with 0.02 inch diameter. Vacuum produced through orifice by closing purge VSV, turning off vent valve and operating leak detection pump, to monitor reference pressure. Reference pressure indicates small leak of EVAP.

Canister Pump Module (fig. 1):

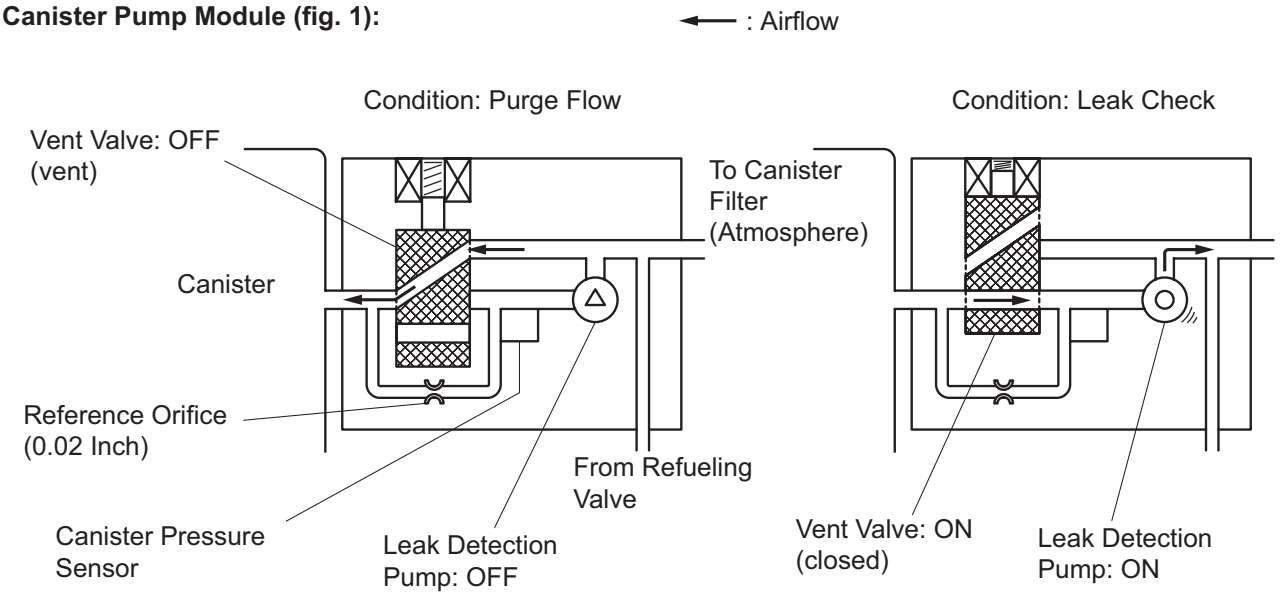

Y

A115902E02

Canister Pressure Sensor Specification (fig. 2):

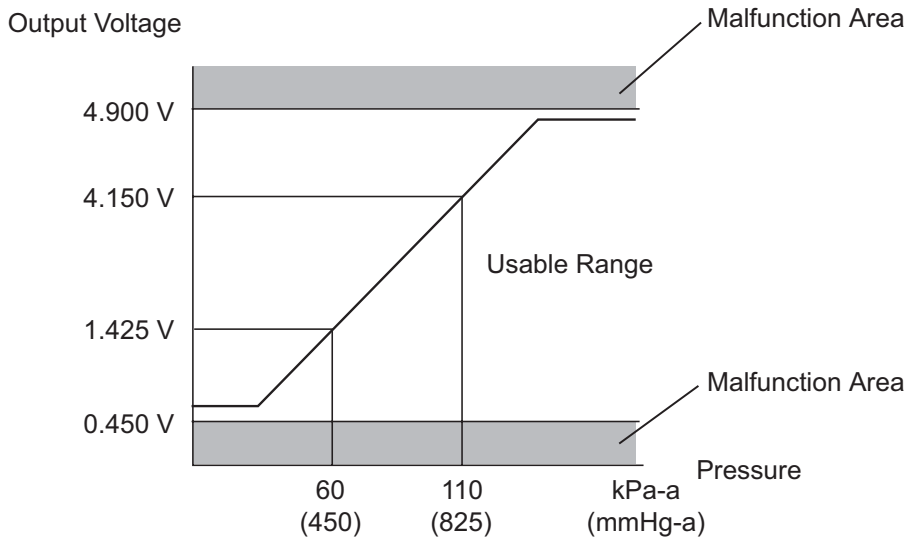

HINT:

Standard atmospheric pressure is 101.3 kPa-a (760 mmHg-a)

A115543E06

ES

Soak Timer Circuit (fig. 3):

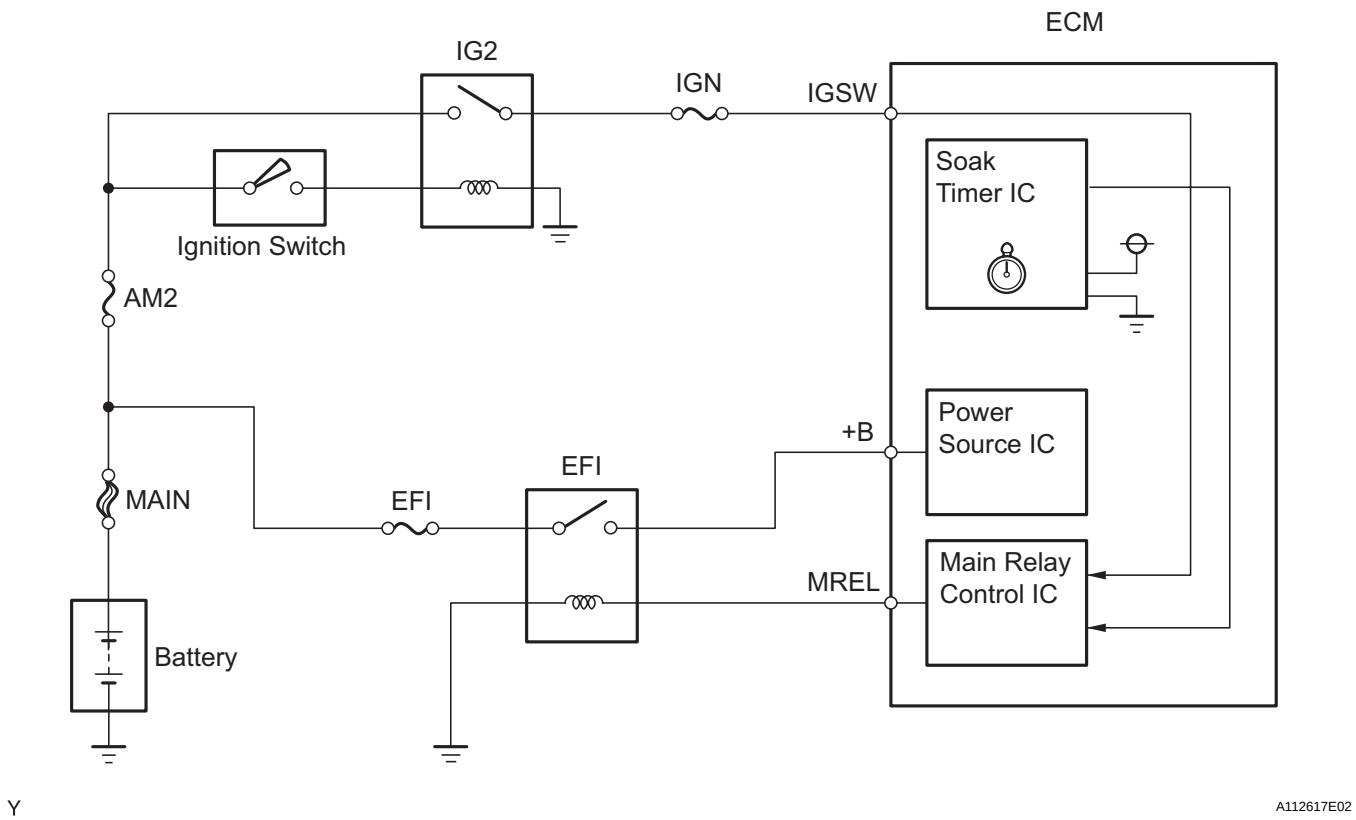

WIRING DIAGRAM

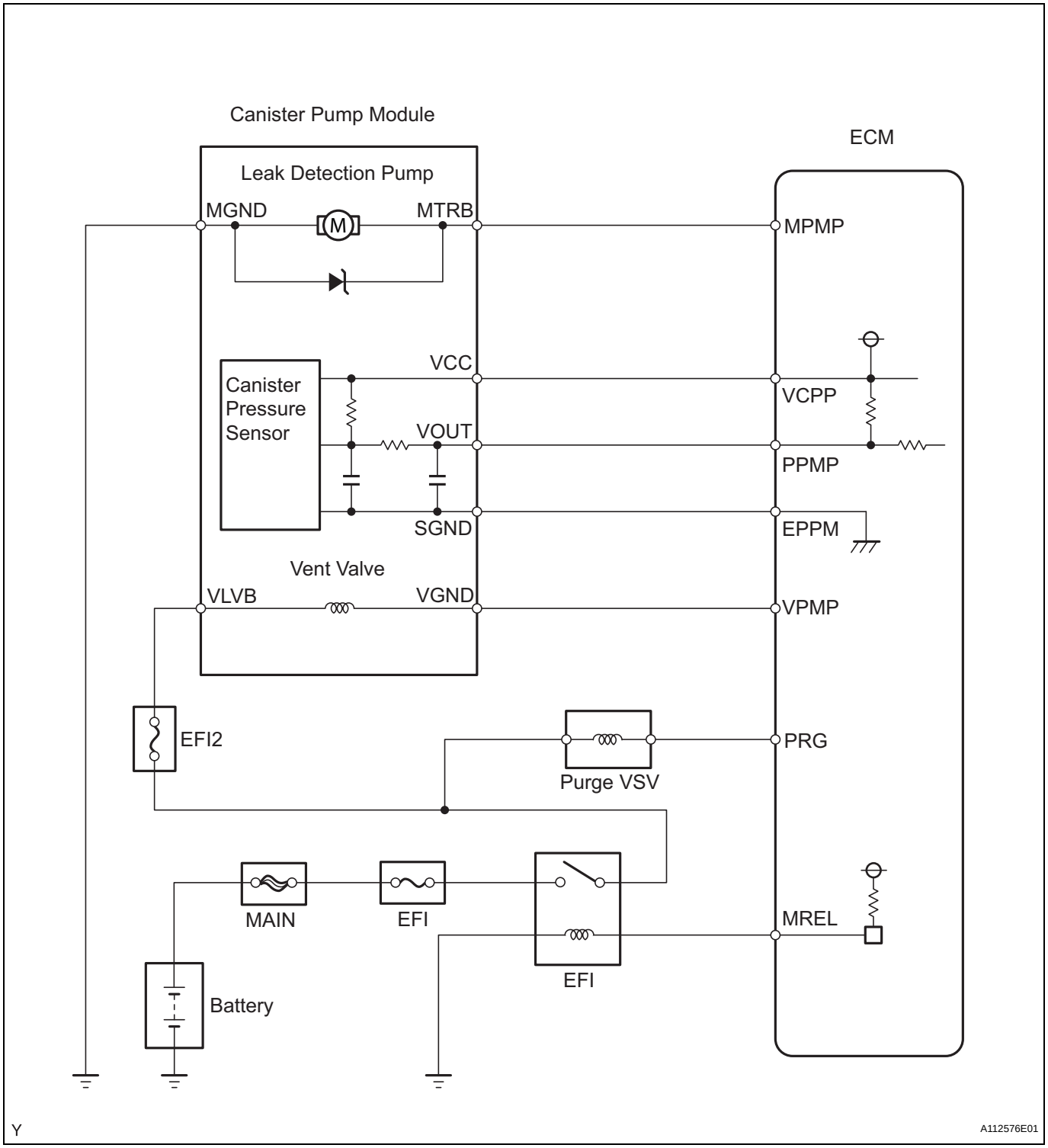

INSPECTION PROCEDURE

NOTICE:

An intelligent tester is required to conduct the following diagnostic troubleshooting procedure.

HINT:

- Using intelligent tester monitor results enables the EVAP (Evaporative Emission) system to be confirmed.

- Read freeze frame data using an intelligent tester. Freeze frame data record the engine condition when malfunctions are detected. When troubleshooting, freeze frame data can help determine if the vehicle was moving or stationary, if the engine was warmed up or not, if the air-fuel ratio was lean or rich, and other data, from the time the malfunction occurred.

1	CONFIRM DTC

(a) Turn the ignition switch to OFF and wait for 10 seconds.
(b) Turn the ignition switch to ON.
(c) Turn the ignition switch to OFF and wait for 10 seconds.
(d) Connect an intelligent tester to the DLC3.
(e) Turn the ignition switch to ON and turn the tester ON.
(f) Select the following menu items: DIAGNOSIS / ENHANCED OBD II / DTC INFO / CURRENT CODES.
(g) Confirm DTCs and freeze frame data.
If any EVAP system DTCs are set, the malfunctioning area can be determined using the table below.
NOTICE:
If the reference pressure difference between the first and second checks is greater than the specification, all the DTCs relating to the reference pressure (P043E, P043F, P2401, P2402 and P2419) are stored.

Malfunctioning Areas \ DTCs	P043E P043F	P0441	P0450	P0451	P0452	P0453	P0455	P0456	P2401 P2402	P2419	P2420
Reference orifice clogged	●								●	●	
Reference orifice high-flow	●								●	●	
Purge VSV stuck open		●					●				
Purge VSV stuck closed		●									
Canister pressure sensor fixed output				●							
Canister pressure sensor noise				●							
Canister pressure sensor low output			●		●						
Canister pressure sensor high output			●			●					
Gross leak		●					●				
Small leak								●			
Leak detection pump stuck OFF	●								●	●	
Leak detection pump stuck ON	●								●	●	
Vent valve stuck closed	●								●	●	
Vent valve stuck open (vent)											●

Y A106731E11

ES

NEXT

2	PERFORM EVAP SYSTEM CHECK (AUTO OPERATION)

NOTICE:

- **The EVAP SYSTEM CHECK (AUTO OPERATION) consists of five steps performed automatically by the intelligent tester. It takes a maximum of approximately 18 minutes.**
- **Do not perform the EVAP SYSTEM CHECK when the fuel tank is more than 90% full because the cut-off valve may be closed, making the fuel tank leak check unavailable.**
- **Do not run the engine during this operation.**
- **When the temperature of the fuel is 35°C (95°F) or more, a large amount of vapor forms and any check results become inaccurate. When performing the EVAP SYSTEM CHECK, keep the temperature below 35°C (95°F).**

(a) Clear DTCs (See page ES-34).

(b) On the tester, select the following menu items: DIAGNOSIS / ENHANCED OBD II / SYSTEM CHECK / EVAP SYS CHECK / AUTO OPERATION.

(c) After the EVAP SYSTEM CHECK is completed, check for pending DTCs by selecting the following menu items: DIAGNOSIS / ENHANCED OBD II / DTC INFO / PENDING CODES.
HINT:
If no pending DTCs are displayed, perform the MONITOR CONFIRMATION (see "Diagnostic Help" menu). After this confirmation, check for pending DTCs. If no DTCs are displayed, the EVAP system is normal.

ES

NEXT

3	PERFORM EVAP SYSTEM CHECK (MANUAL OPERATION)

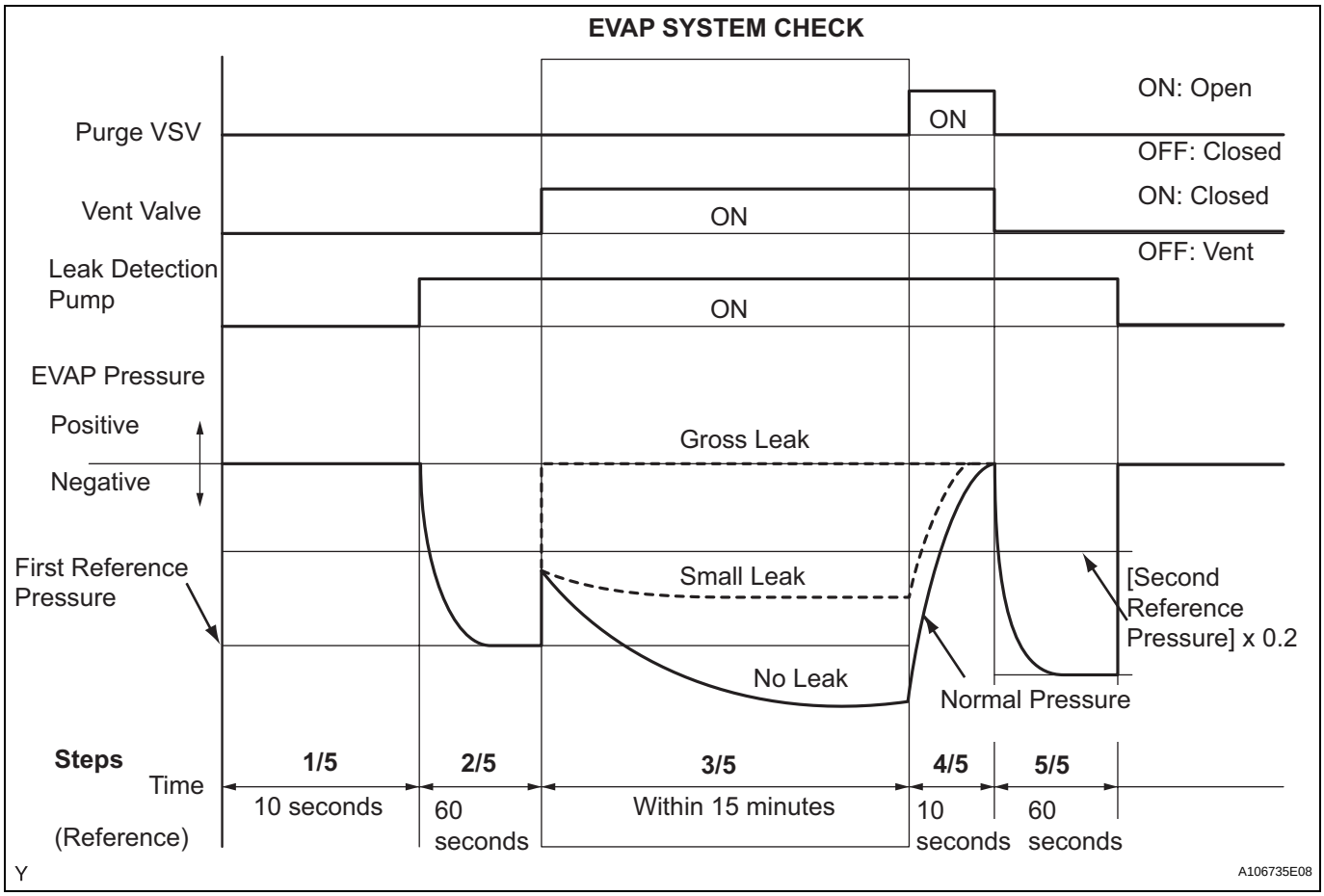

NOTICE:

- **In the EVAP SYSTEM CHECK (MANUAL OPERATION), perform the series of 5 EVAP SYSTEM CHECK steps manually using the intelligent tester.**
- **Do not perform the EVAP SYSTEM CHECK when the fuel tank is more than 90% full because the cut-off valve may be closed, making the fuel tank leak check unavailable.**
- **Do not run the engine during this operation.**

- **When the temperature of the fuel is 35°C (95°F) or more, a large amount of vapor forms and any check results become inaccurate. When performing the EVAP SYSTEM CHECK, keep the temperature below 35°C (95°F).**

(a) Clear DTCs (See page ES-34).

(b) Select the following menu items: DIAGNOSIS / ENHANCED OBD II / SYSTEM CHECK / EVAP SYS CHECK / MANUAL OPERATION.

NEXT

4	PERFORM EVAP SYSTEM CHECK (STEP 1/5)

ES

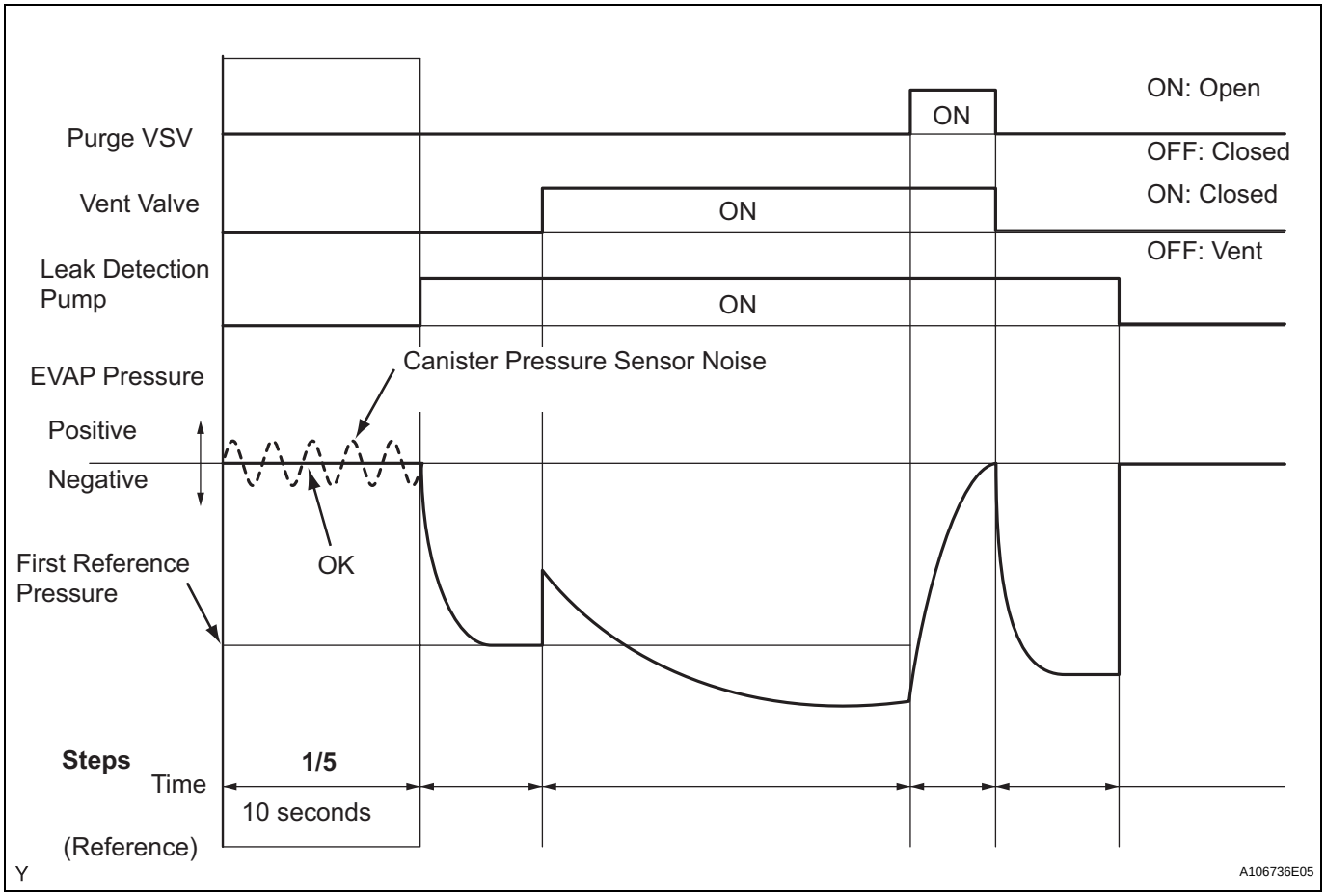

(a) Check the EVAP pressure in step 1/5.

Result

DTCs*	Test Results	Suspected Trouble Areas	Proceed To
-	Virtually no variation in EVAP pressure	Not yet determined	A
P0451	EVAP pressure fluctuates by +-0.3 kPa-g (2.25 mmHg-g) or more	Canister pressure sensor noise	B

*: These DTCs are already present in the ECM when the vehicle arrives and are confirmed in step 1.

B → **Go to step 29**

A

5	PERFORM EVAP SYSTEM CHECK (STEP 1/5 TO 2/5)

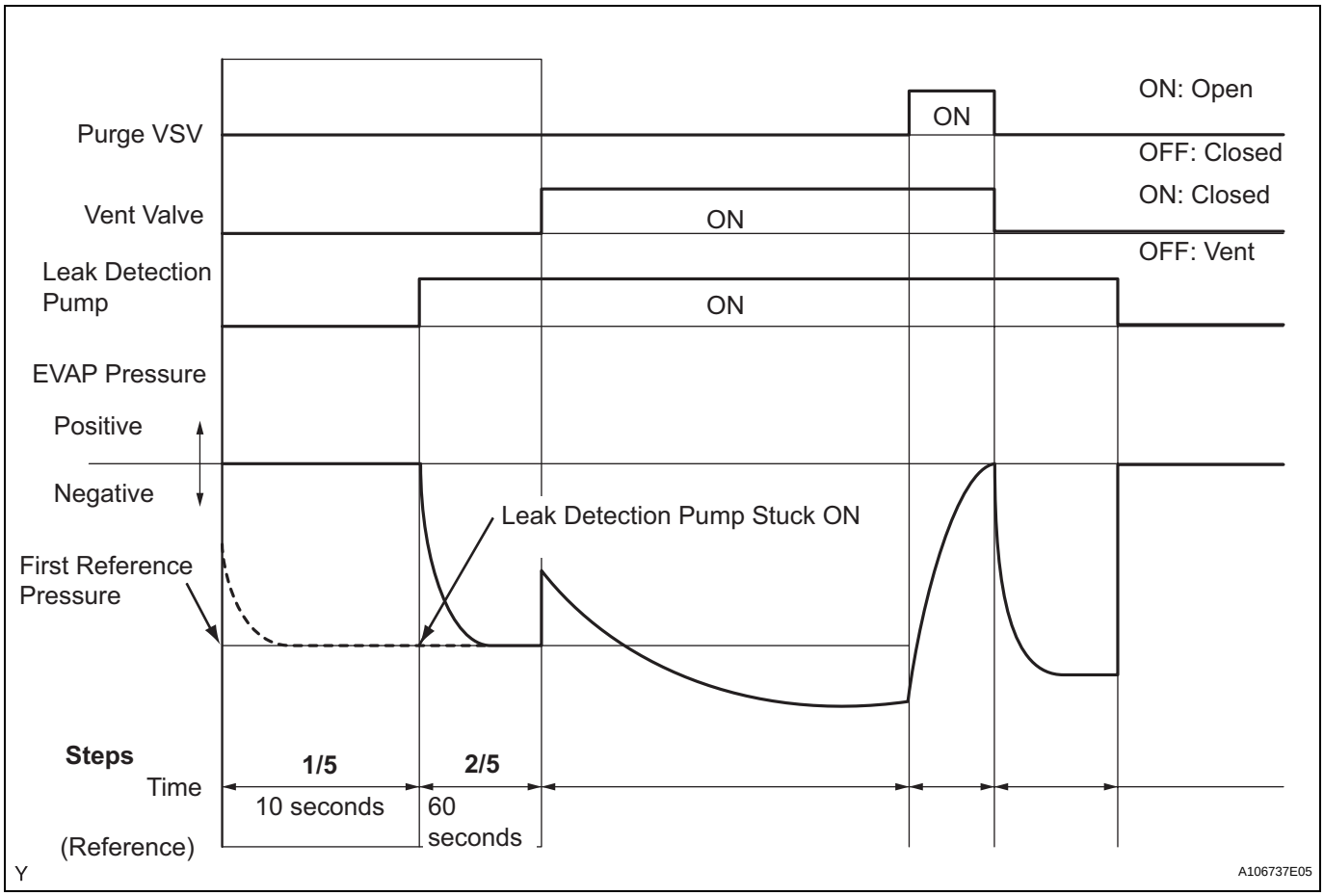

(a) Check the EVAP pressure in steps 1/5 and 2/5.

Result

DTCs*	Test Results	Suspected Trouble Areas	Proceed To
-	Virtually no variation in EVAP pressure during step 1/5. Then decreases to reference pressure	Not yet determined	A
P2402	Small difference between EVAP pressures during steps 1/5 and 2/5	Leak detection pump stuck ON	B

*: These DTCs are already present in the ECM when the vehicle arrives and are confirmed in step 1.
HINT:
The first reference pressure is the value determined in step 2/5.

B → **Go to step 22**

A

6	PERFORM EVAP SYSTEM CHECK (STEP 2/5)

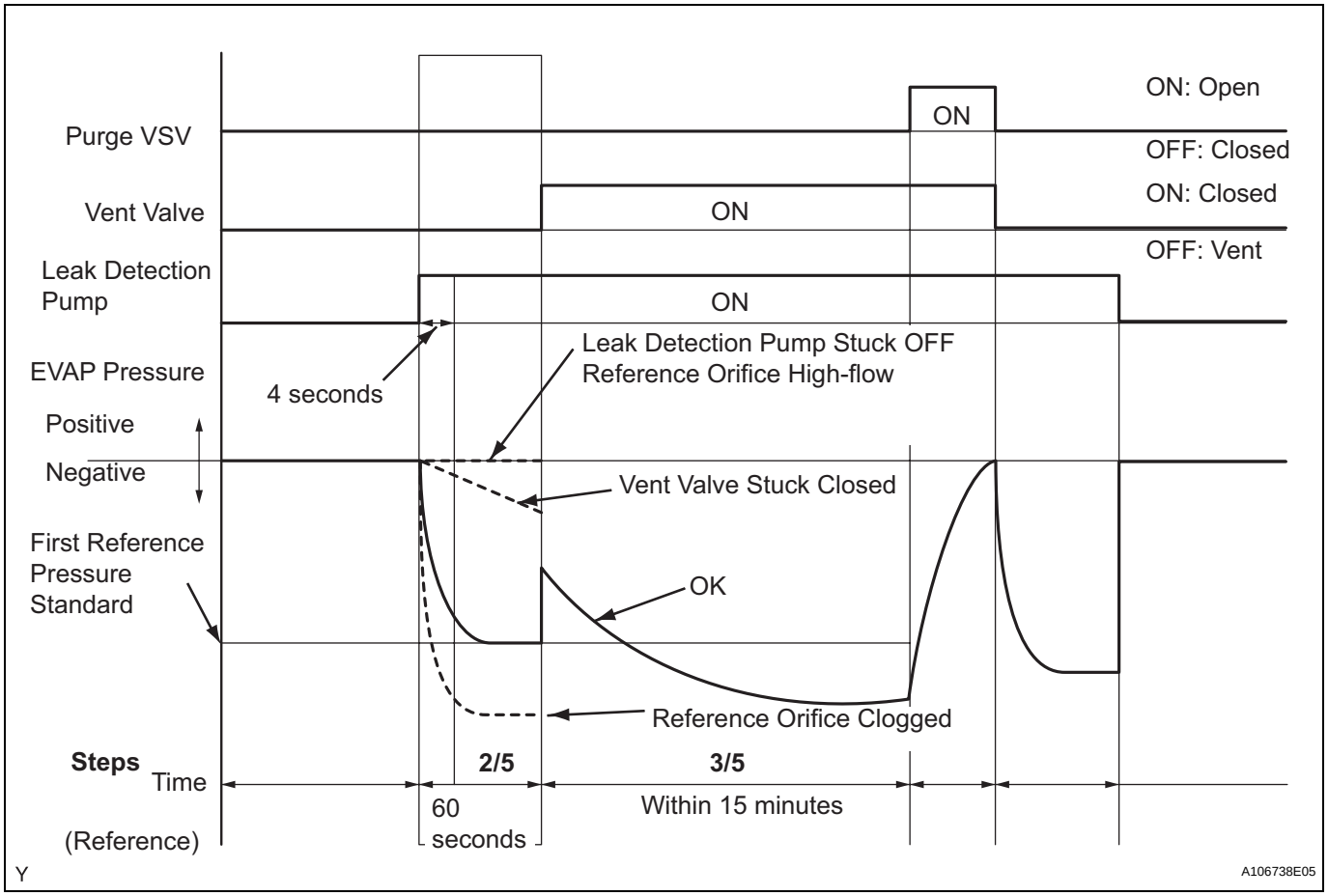

HINT:
Make a note of the pressures checked in steps (a) and (b) below.
(a) Check the EVAP pressure 4 seconds after the leak detection pump is activated*.
*: The leak detection pump begins to operate as step 1/5 finishes and step 2/5 starts.
(b) Check the EVAP pressure again when it has stabilized. This pressure is the reference pressure.

Result

DTCs*	Test Results	Suspected Trouble Areas	Proceed To
-	EVAP pressure in step (b) between -4.85 kPa-g and -1.057 kPa-g (-36.4 mmHg-g and -7.93 mmHg-g)	Not yet determined	A
P043F and P2401	EVAP pressure in step (b) -1.057 kPa-g (-7.93 mmHg-g) or more	• Reference orifice high-flow • Leak detection pump stuck OFF	B
P043E	EVAP pressure in step (b) below -4.85 kPa-g (-36.4 mmHg-g)	Reference orifice clogged	C
P2419	EVAP pressure in step (a) more than -1.057 kPa-g (-7.93 mmHg-g)	Vent valve stuck closed	D

*: These DTCs are already present in the ECM when the vehicle arrives and are confirmed in step 1.

B	Go to step 11
C	Go to step 29
D	Go to step 20

A

7	PERFORM EVAP SYSTEM CHECK (STEP 2/5 TO 3/5)

ES

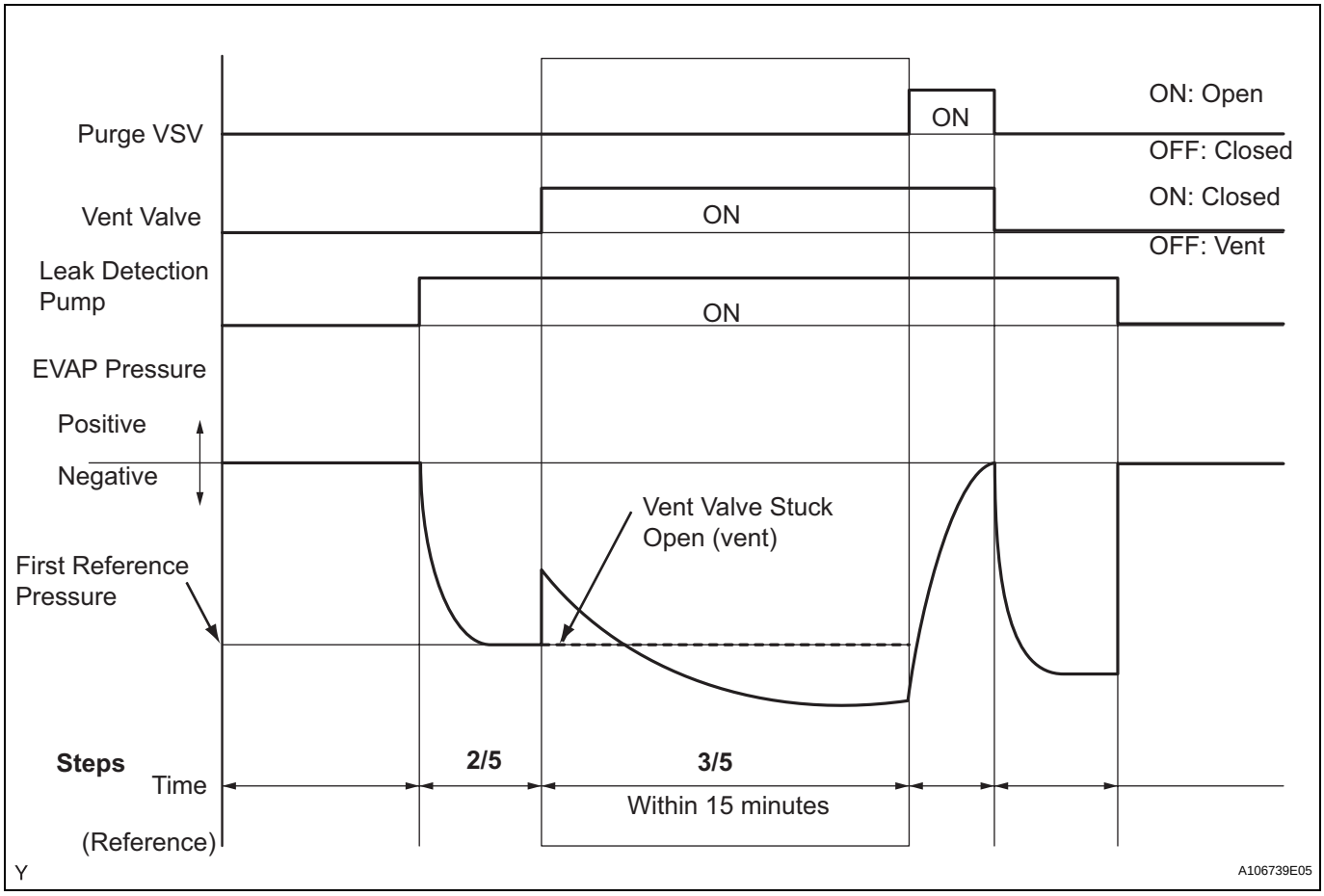

(a) Check the EVAP pressure increase in step 3/5.

Result

DTCs*	Test Results	Suspected Trouble Areas	Proceed To
-	EVAP pressure increases by 0.3 kPa-g (2.25 mmHg-g) or more within 10 seconds of proceeding from step 2/5 to step 3/5	Not yet determined	A
P2420	No variation in EVAP pressure despite proceeding from step 2/5 to step 3/5	Vent valve stuck open (vent)	B
P0451	No variation in EVAP pressure during steps 1/5 through 3/5	Canister pressure sensor malfunction fixed	C

*: These DTCs are already present in the ECM when the vehicle arrives and are confirmed in step 1.

B	Go to step 19

C → Go to step 29

A

8	PERFORM EVAP SYSTEM CHECK (STEP 3/5)

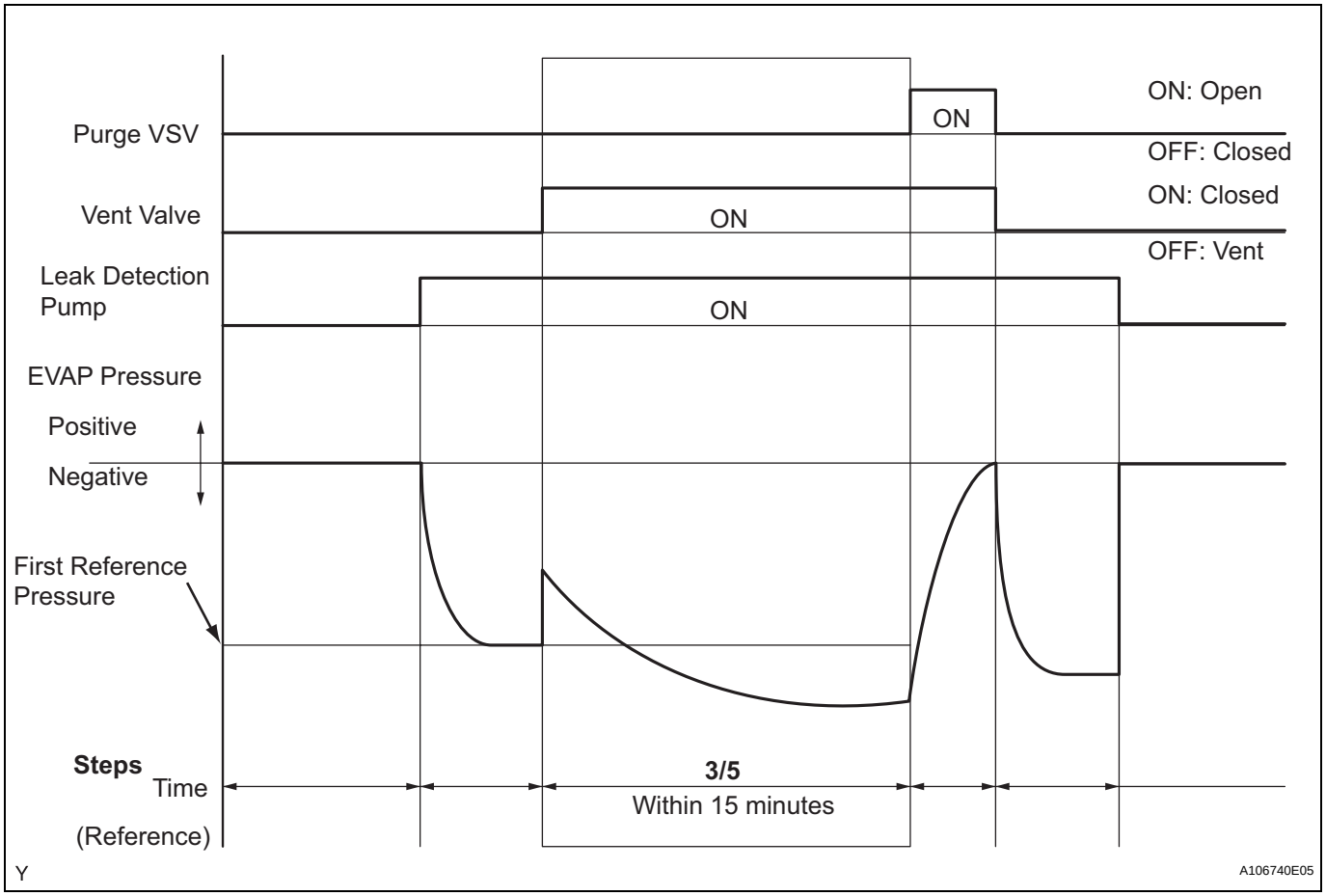

(a) Wait until the EVAP pressure change is less than 0.1 kPa-g (0.75 mmHg-g) for 30 seconds.

(b) Measure the EVAP pressure and record it.
HINT:
A few minutes are required for the EVAP pressure to become saturated. When there is little fuel in the fuel tank, it takes up to 15 minutes.

NEXT

ES

9	PERFORM EVAP SYSTEM CHECK (STEP 4/5)

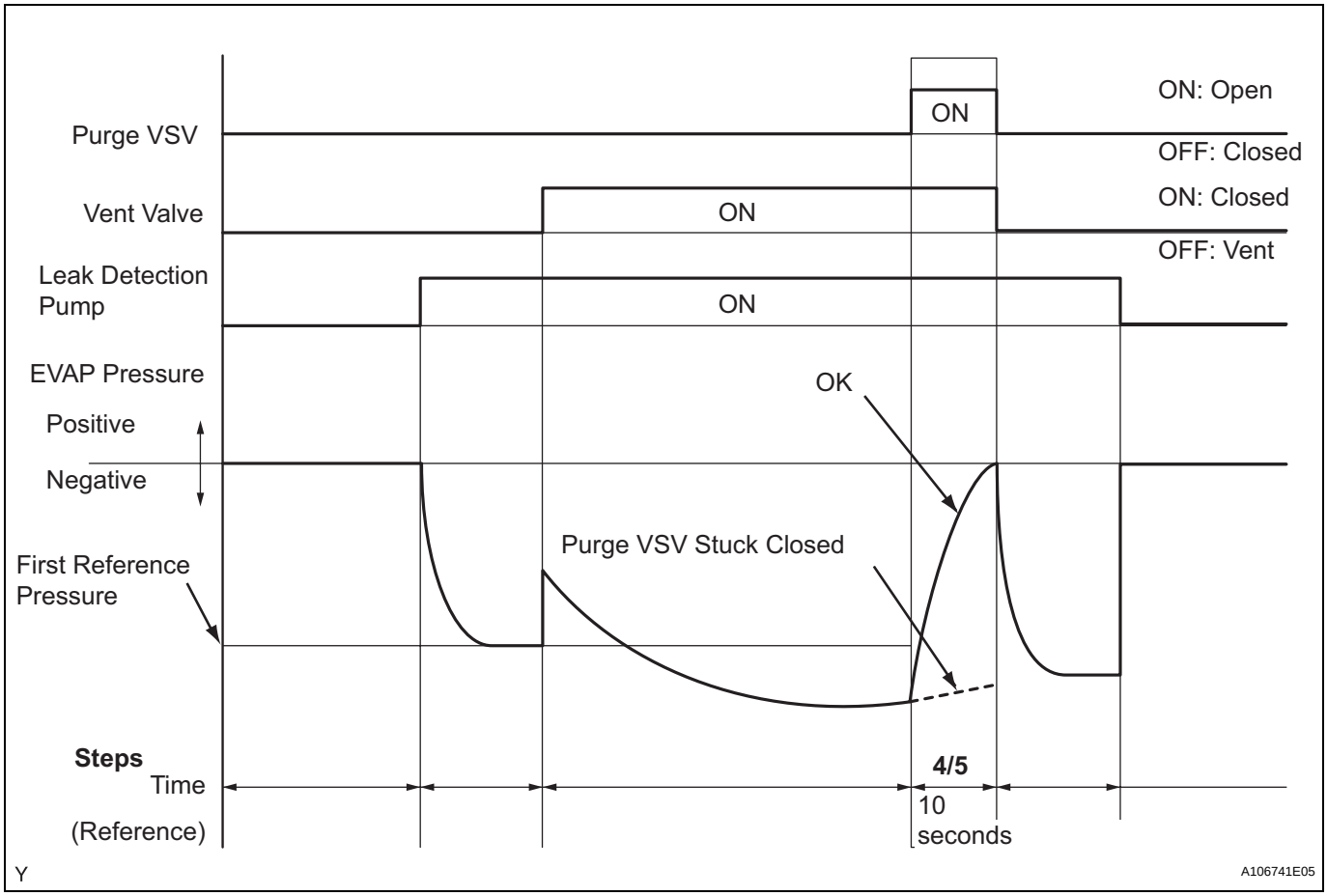

(a) Check the EVAP pressure in step 4/5.

Result

DTCs*	Test Results	Suspected Trouble Areas	Proceed To
-	EVAP pressure increases by 0.3 kPa-g (2.25 mmHg-g) or more within 10 seconds of proceeding from step 3/5 to step 4/5	Not yet determined	A
P0441	EVAP pressure increases by 0.3 kPa-g (2.25 mmHg-g) or more within 10 seconds of proceeding from step 3/5 to step 4/5	Problems in EVAP hose between purge VSV and intake manifold	B
P0441	Variation in EVAP pressure less than 0.3 kPa-g (2.25 mmHg-g) for 10 seconds, after proceeding from step 3/5 to step 4/5	Purge VSV stuck closed	C

*: These DTCs are already present in the ECM when the vehicle arrives and are confirmed in step 1.

B → **Go to step 15**

C → **Go to step 12**

A

10	PERFORM EVAP SYSTEM CHECK (STEP 5/5)

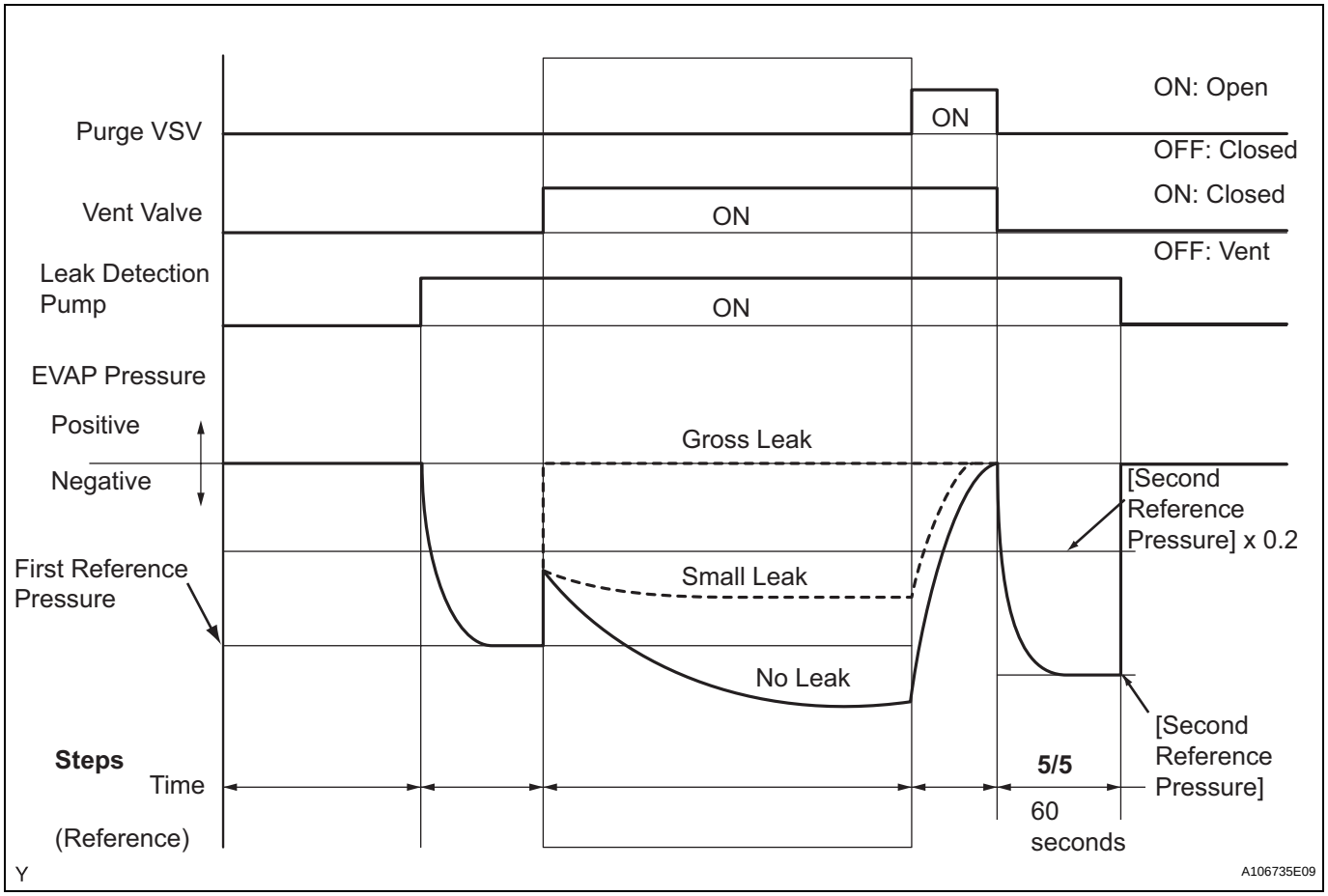

(a) Check the EVAP pressure in step 5/5.
(b) Compare the EVAP pressure in step 3/5 and the second reference pressure (step 5/5).

Result

DTCs*	Test Results	Suspected Trouble Areas	Proceed To
-	EVAP pressure (step 3/5) lower than second reference pressure (step 5/5)	Not yet determined (no leakage from EVAP system)	A
P0441 and P0455	EVAP pressure (step 3/5) higher than [second reference pressure (step 5/5) x 0.2]	• Purge VSV stuck open • EVAP gross leak	B
P0456	EVAP pressure (step 3/5) higher than second reference pressure (step 5/5)	EVAP small leak	B

*: These DTCs are already present in the ECM when the vehicle arrives and are confirmed in step 1.

A	Go to step 35
B	Go to step 12

ES

11	PERFORM EVAP SYSTEM CHECK (STEP 3/5)

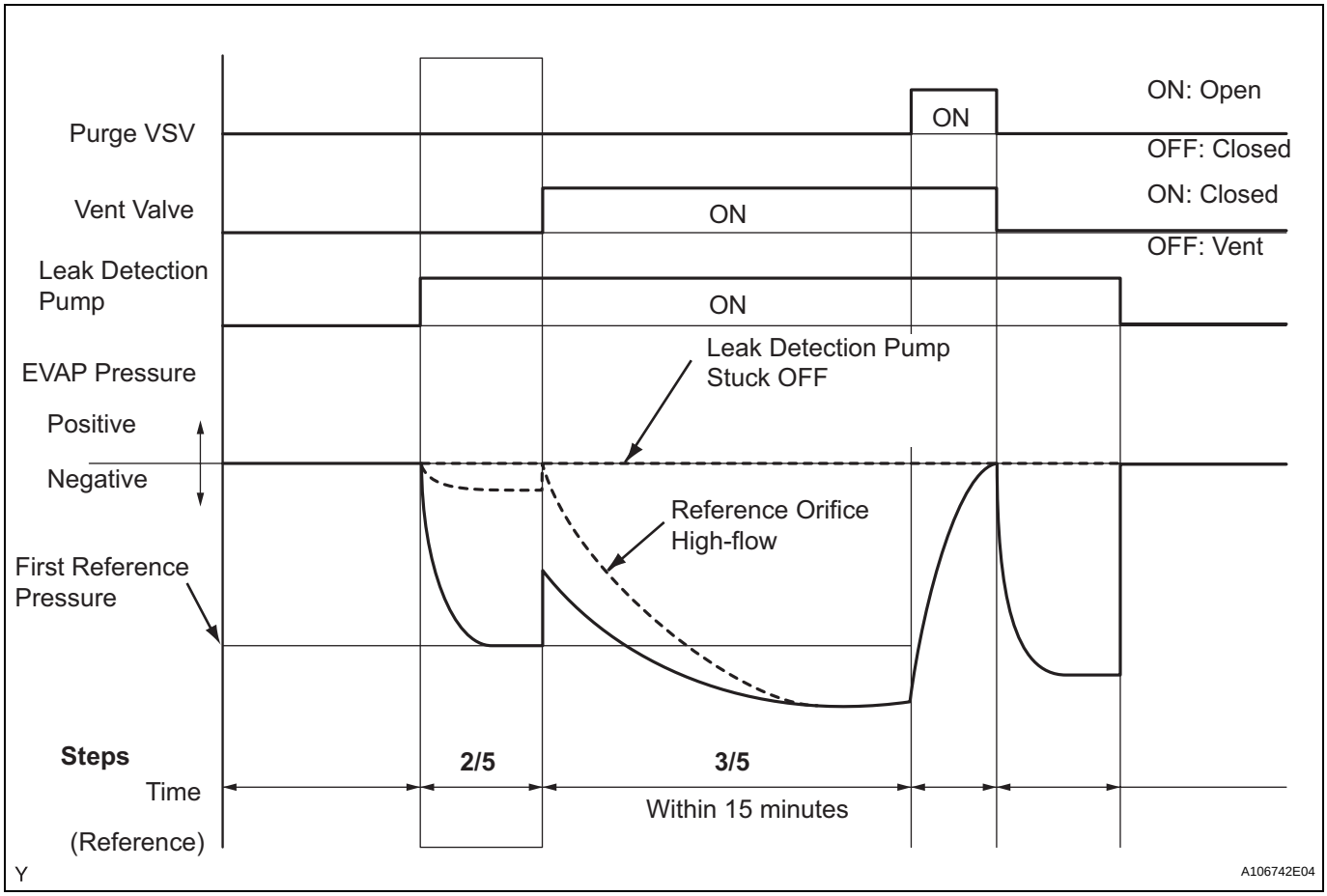

(a) Check the EVAP pressure in step 3/5.

Result

DTCs*	Test Results	Suspected Trouble Areas	Proceed To
P043F	EVAP pressure less than [reference pressure] measured at 2/5	Reference orifice high-flow	A
P2401	EVAP pressure almost same as [reference pressure] measured at 2/5	Leak detection pump stuck OFF	B

*: These DTCs are already present in the ECM when the vehicle arrives and are confirmed in step 1.
HINT:
The first reference pressure is the value determined in step 2/5.

A	Go to step 29
B	Go to step 22

12 PERFORM ACTIVE TEST USING INTELLIGENT TESTER (PURGE VSV)

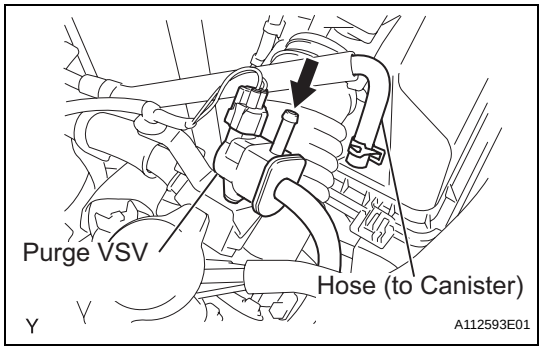

(a) On the intelligent tester, select the following menu items: DIAGNOSIS / ENHANCED OBD II / ACTIVE TEST / EVAP VSV.
(b) Disconnect the hose (connected to the canister) from the purge VSV.
(c) Start the engine.
(d) Using the tester, turn off the purge VSV (EVAP VSV: OFF).
(e) Use your finger to confirm that the purge VSV has no suction.
(f) Using the tester, turn on the purge VSV (EVAP VSV: ON).
(g) Use your finger to confirm that the purge VSV has suction.

Result

Test Results	Suspected Trouble Areas	Proceed To
No suction when purge VSV turned OFF, and suction applied when turned ON	**Purge VSV normal**	**A**
Suction applied when purge VSV turned OFF	**Purge VSV stuck open**	**B**
No suction when purge VSV turned ON	• **Purge VSV stuck closed** • **Problems with EVAP hose between purge VSV and intake manifold**	**C**

(h) Reconnect the hose.

B → **Go to step 14**

C → **Go to step 15**

A

13 CHECK FUEL CAP ASSEMBLY

(a) Check that the fuel cap is correctly installed and confirm the fuel cap meets OEM specifications.
  (1) Tighten the fuel cap until a few click sounds are heard.
  HINT:
  If an EVAP tester is available, check the fuel cap using the tester.
(b) Remove the fuel cap and install it onto a fuel cap adapter.
(c) Connect an EVAP tester pump hose to the adapter, and pressurize the cap to 3.2 to 3.7 kPa (24 to 28 mmHg) using an EVAP tester pump.
(d) Seal the adapter and wait for 2 minutes.
(e) Check the pressure. If the pressure is 2 kPa (15 mmHg) or more, the fuel cap is normal.

Result

Test Results	Suspected Trouble Areas	Proceed To
Fuel cap correctly installed	**-**	**A**

ES

Test Results	Suspected Trouble Areas	Proceed To
Fuel cap loose	• Fuel cap improperly installed • Defective fuel cap • Fuel cap does not meet OEM specifications	B
No fuel cap	-	C

(f) Reinstall the fuel cap.

A	Go to step 28
B	Go to step 26
C	Go to step 27

14 INSPECT DUTY VACUUM SWITCHING VALVE (PURGE VSV)

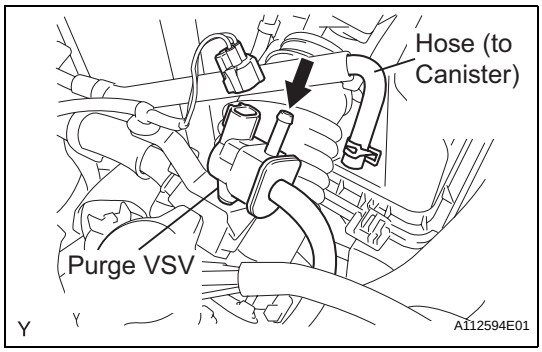

(a) Turn the ignition switch to OFF.
(b) Disconnect the C3 purge VSV connector.
(c) Disconnect the hose (connected to the canister) from the purge VSV.
(d) Start the engine.
(e) Use your finger to confirm that the purge VSV has no suction.

Result

Test Results	Suspected Trouble Areas	Proceed To
No suction	ECM	A
Suction applied	Purge VSV	B

(f) Reconnect the purge VSV connector.
(g) Reconnect the hose.

A	Go to step 34
B	Go to step 30

15 CHECK EVAP HOSE (PURGE VSV - INTAKE MANIFOLD)

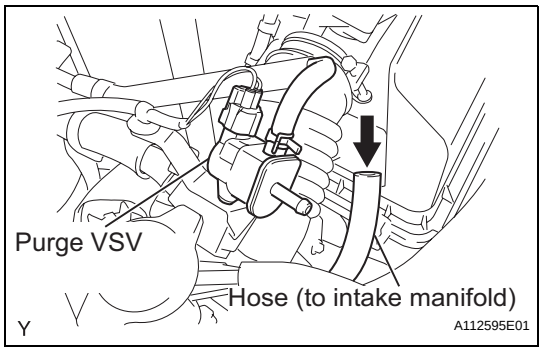

(a) Disconnect the hose (connected to the intake manifold) from the purge VSV.
(b) Start the engine.
(c) Use your finger to confirm that the hose has suction.

Result

Test Results	Suspected Trouble Areas	Proceed To
Suction applied	**EVAP hose between purge VSV and intake manifold normal**	**A**
No suction	• **Intake manifold port** • **EVAP hose between purge VSV and intake manifold**	**B**

(d) Reconnect the hose.

B → **Go to step 25**

A

16 INSPECT DUTY VACUUM SWITCHING VALVE (PURGE VSV)

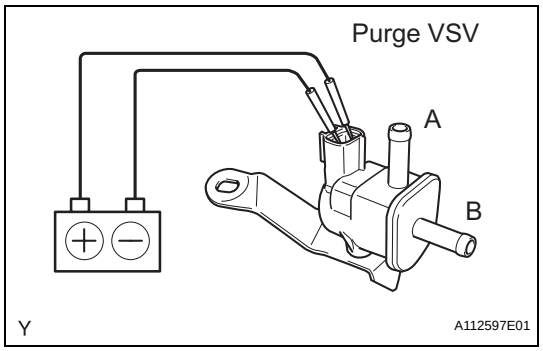

(a) Remove the purge VSV.
(b) Apply the battery voltage to the terminals of the purge VSV.
(c) Using an air gun, confirm that air flows from port A to port B.

Result

Test Results	Suspected Trouble Areas	Proceed To
Air flows	**Purge VSV normal**	**A**
No air flow	**Purge VSV**	**B**

(d) Install the purge VSV.

B → **Go to step 30**

A

17 CHECK HARNESS AND CONNECTOR (POWER SOURCE OF PURGE VSV)

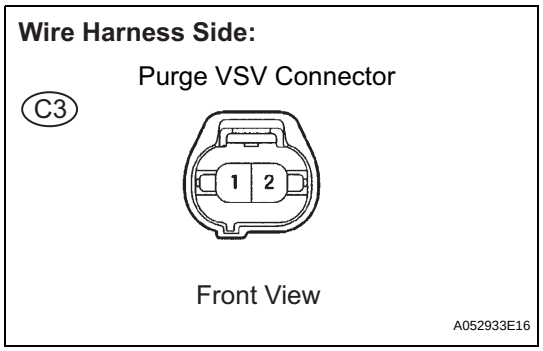

(a) Disconnect the C3 purge VSV connector.
(b) Turn the ignition switch to ON.
(c) Measure the voltage between terminal 2 of the purge VSV connector and the body ground.

Result

Test Results	Suspected Trouble Areas	Proceed To
11 to 14 V	**Normal**	**A**
Other than result above	**Wire harness or connectors between purge VSV and ECM**	**B**

ES

(d) Reconnect the purge VSV connector.

B → **Go to step 31**

A

18 CHECK HARNESS AND CONNECTOR (PURGE VSV - ECM)

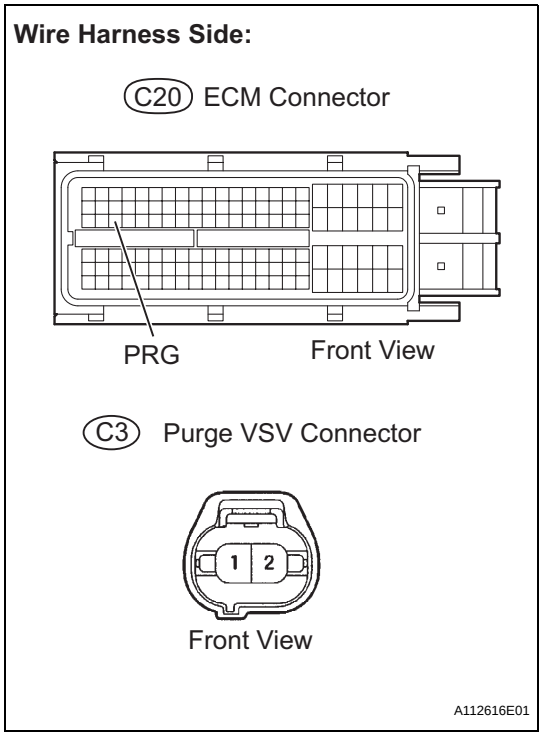

(a) Disconnect the C20 ECM connector and the C3 purge VSV connector.
(b) Check the resistance.
Standard resistance

Tester Connections	Specified Conditions
PRG (C20-49) - Purge VSV (C3-1)	Below 1 Ω
PRG (C20-49) - Body ground	10 kΩ or higher
Purge VSV (C3-1) - Body ground	

(c) Reconnect the purge VSV connector.
(d) Reconnect the ECM connector.

OK → **Go to step 34**

NG → **Go to step 31**

ES

19 INSPECT CANISTER PUMP MODULE (POWER SOURCE FOR VENT VALVE)

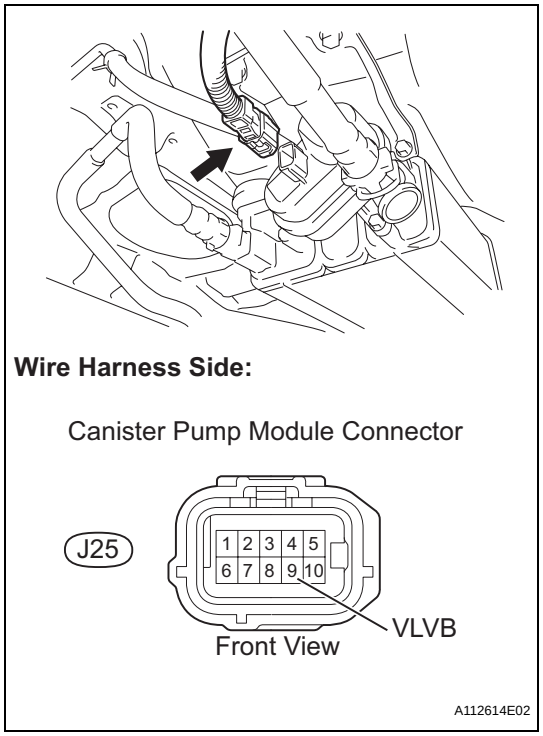

(a) Turn the ignition switch to OFF.
(b) Disconnect the J25 canister pump module connector.
(c) Turn the ignition switch to ON.
(d) Measure the voltage between VLVB terminal of the canister pump module connector and the body ground.

ES

Result

Test Results	Suspected Trouble Areas	Proceed To
11 to 14 V	**1. Wire harness between vent valve and ECM 2. Vent valve 3. ECM**	**A**
Below 3 V	**Power source wire harness of vent valve**	**B**

(e) Reconnect the canister pump module connector.

B → **Go to step 31**

A

20 INSPECT CANISTER PUMP MODULE (VENT VALVE OPERATION)

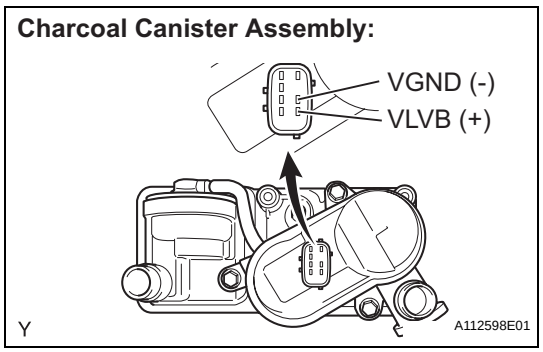

(a) Turn the ignition switch to OFF.
(b) Disconnect the J25 canister pump module connector.
(c) Apply the battery voltage to VLVB and VGND terminals of the canister pump module.
(d) Touch the canister pump module to confirm the vent valve operation.

Result

Test Results	Suspected Trouble Areas	Proceed To
Operating	**1. Wire harness between vent valve and ECM 2. ECM**	**A**

Test Results	Suspected Trouble Areas	Proceed To
Not operating	Vent valve	B

(e) Reconnect the canister connector.

B → **Go to step 29**

A

21 CHECK HARNESS AND CONNECTOR (ECM - CANISTER PUMP MODULE)

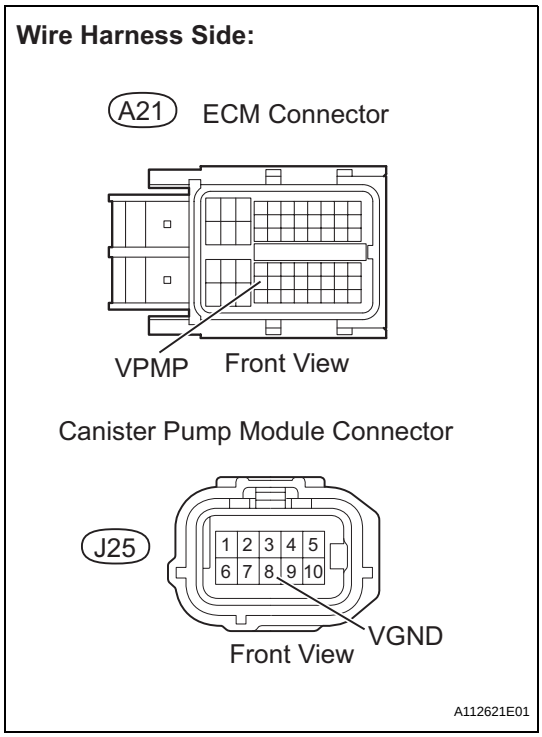

(a) Disconnect the A21 ECM connector.
(b) Disconnect the J25 canister pump module connector.
(c) Check the resistance between VPMP terminal of the ECM connector and VGND terminal of the canister pump module connector.

Result

Test Results	Suspected Trouble Areas	Proceed To
Below 1 Ω	ECM	A
10 kΩ or higher	Wire harness between ECM and canister pump module	B

(d) Reconnect the ECM connector.
(e) Reconnect the canister pump module connector.

A → **Go to step 34**

B → **Go to step 31**

22	PERFORM ACTIVE TEST USING INTELLIGENT TESTER (VACUUM PUMP (ALONE))

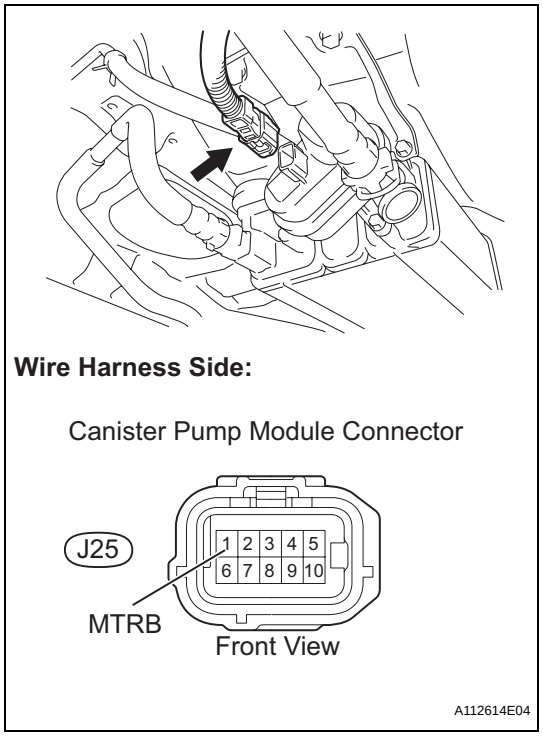

(a) Turn the ignition switch to OFF.
(b) Disconnect the J25 canister pump module connector.
(c) Turn the ignition switch to ON.
(d) On the intelligent tester, select the following menu items: DIAGNOSIS / ENHANCED OBD II / ACTIVE TEST / VACUUM PUMP (ALONE).
(e) Measure the voltage between MTRB terminal 1 of the canister pump module connector and the body ground when the leak detection pump is turned ON and OFF using the tester.

ES

Result

Test Results	Suspected Trouble Areas	Proceed To
Below 3 V when OFF **11 to 14 V when ON**	**1. Wire harness between leak detection pump and body ground** **2. Leak detection pump**	**A**
Below 3 V when OFF and ON	**1. Wire harness between leak detection pump and ECM** **2. ECM**	**B**

B → **Go to step 24**

A

23	CHECK HARNESS AND CONNECTOR (CANISTER PUMP MODULE - BODY GROUND)

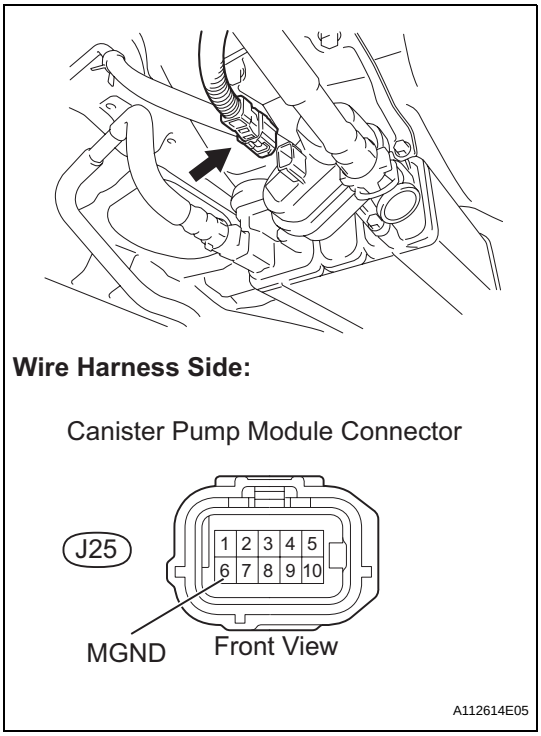

(a) Turn the ignition switch to OFF.
(b) Disconnect the J25 canister pump module connector.
(c) Check the resistance between MGND terminal of the canister pump module connector and the body ground.

ES

Result

Test Results	Suspected Trouble Areas	Proceed To
Below 1 Ω	**Leak detection pump**	**A**
10 kΩ or higher	**Wire harness between canister pump module and body ground**	**B**

(d) Reconnect the canister pump module connector.

A	**Go to step 29**
B	**Go to step 31**

24 CHECK HARNESS AND CONNECTOR (ECM - CANISTER PUMP MODULE)

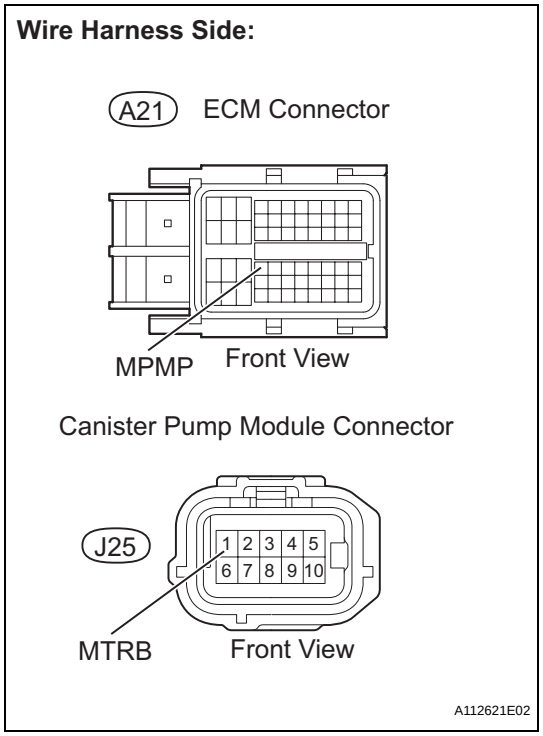

(a) Turn the ignition switch to OFF.
(b) Disconnect the J25 canister pump module connector.
(c) Disconnect the A21 ECM connector.
(d) Check the resistance between MPMP terminal of the ECM connector and MTRB terminal of the canister pump module connector.

ES

Result

Test Results	Suspected Trouble Areas	Proceed To
Below 1 Ω	ECM	A
10 kΩ or higher	Wire harness between ECM and canister pump module	B

(e) Reconnect the canister pump module connector.
(f) Reconnect the ECM connector.

A → **Go to step 34**

B → **Go to step 31**

25 INSPECT INTAKE MANIFOLD (EVAP PURGE PORT)

(a) Stop the engine.
(b) Disconnect the EVAP hose from the intake manifold.
(c) Start the engine.
(d) Use your finger to confirm that the port of the intake manifold has suction.

Result

Test Results	Suspected Trouble Areas	Proceed To
Suction applied	EVAP hose between intake manifold and purge VSV	A
No suction	Intake manifold	B

(e) Reconnect the EVAP hose.

A → **Go to step 32**

B → **Go to step 33**

26	CORRECTLY REINSTALL OR REPLACE FUEL CAP

HINT:
- When reinstalling the fuel cap, tighten it until a few click sounds are heard.
- When replacing the fuel cap, use a fuel cap that meets OEM specifications, and install it until a few click sounds are heard.

NEXT → **Go to step 36**

ES

27	REPLACE FUEL CAP

HINT:
When installing the fuel cap, tighten it until a few click sounds are heard.

NEXT → **Go to step 36**

28	LOCATE EVAP LEAK PART

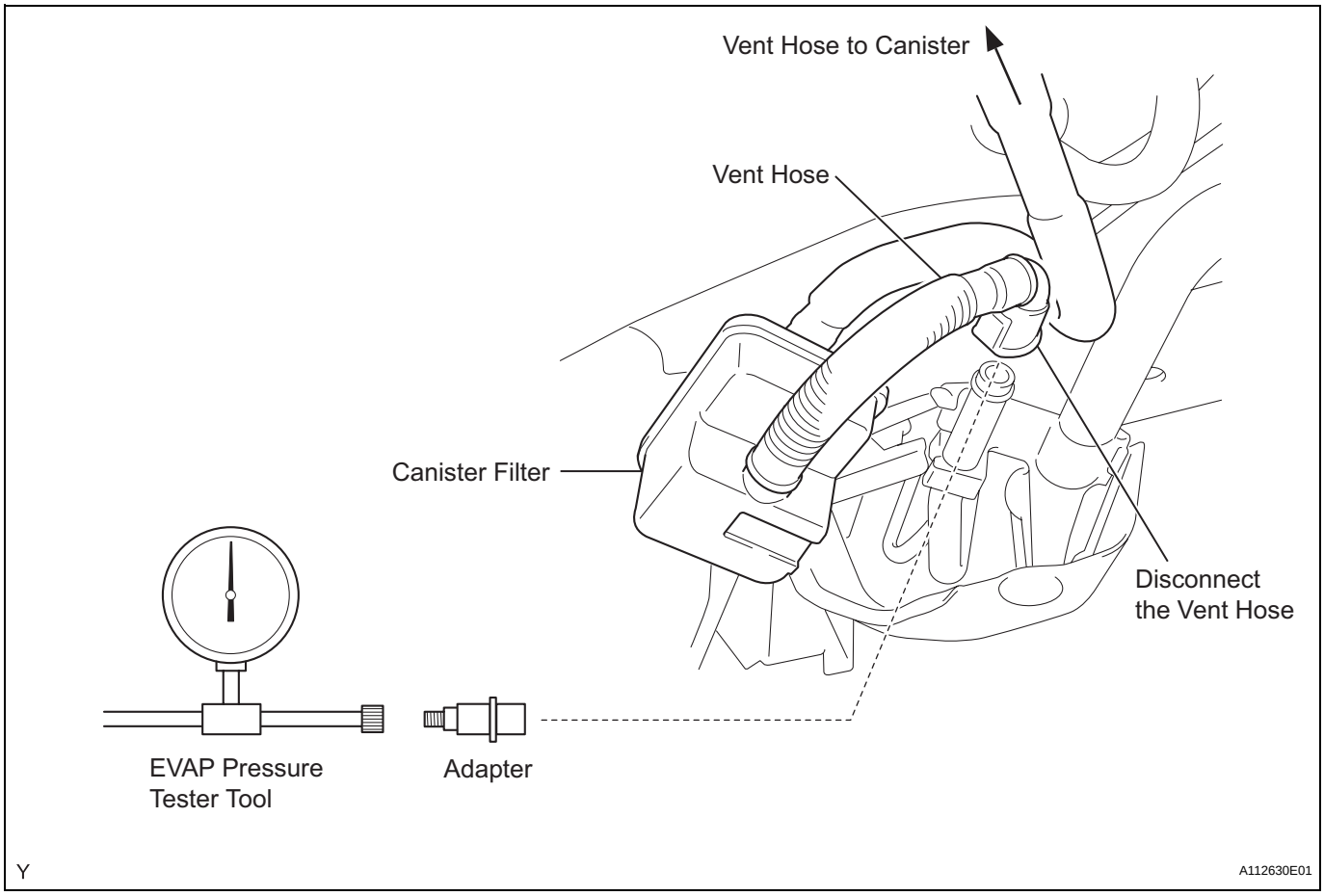

(a) Disconnect the vent hose.
(b) Connect the EVAP pressure tester tool to the vent hose with the adapter.

(c) Pressurize the EVAP system to 3.2 to 3.7 kPa (24 to 28 mmHg).
(d) Apply soapy water to the piping and connecting parts of the EVAP system.
(e) Look for areas where bubbles appear. This indicates the leak point.
(f) Repair or replace the leak point.
HINT:
Disconnect the hose between the canister and the fuel tank from the canister. Block the canister side and conduct an inspection. In this way, the fuel tank can be excluded as an area suspected of causing fuel leaks.

NEXT **Go to step 36**

ES

29	REPLACE CHARCOAL CANISTER ASSEMBLY

(a) Replace the canister assembly (See page EC-7).
NOTICE:
When replacing the canister, check the canister pump module interior and related pipes for water, fuel and other liquids. If liquids are present, check for disconnections and/or cracks in the following: 1) the pipe from the air inlet port to the canister pump module; 2) the canister filter; and 3) the fuel tank vent hose.

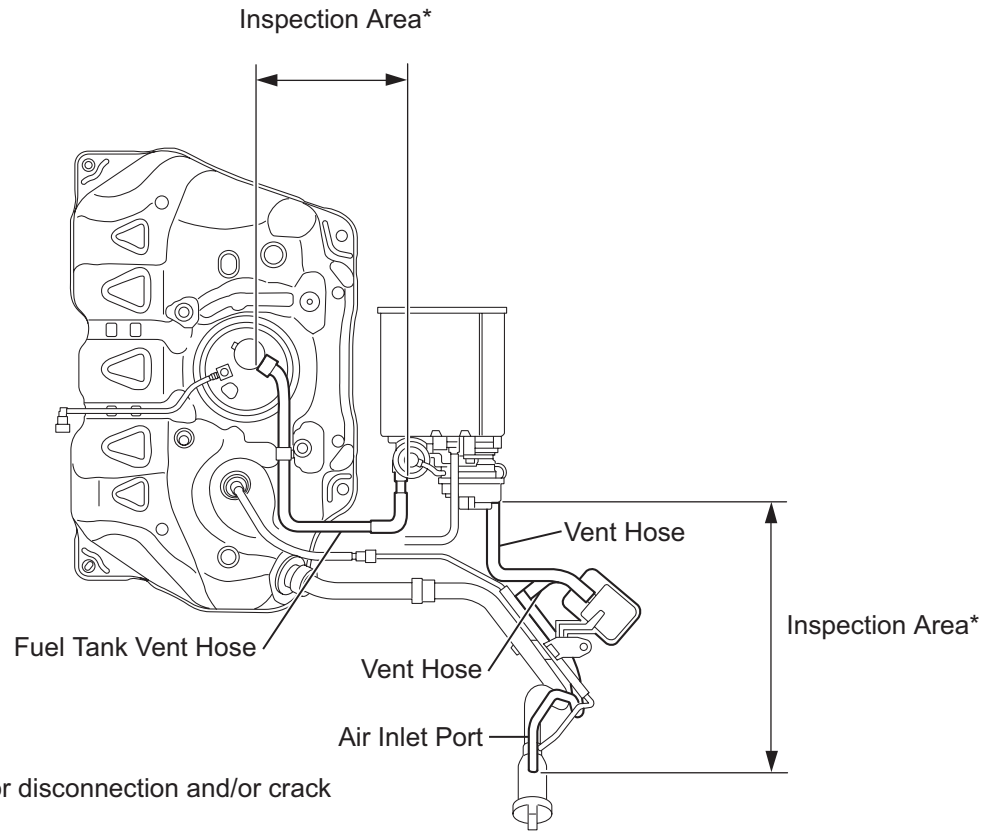

NEXT → Go to step 36

30 REPLACE DUTY VACUUM SWITCHING VALVE (PURGE VSV)

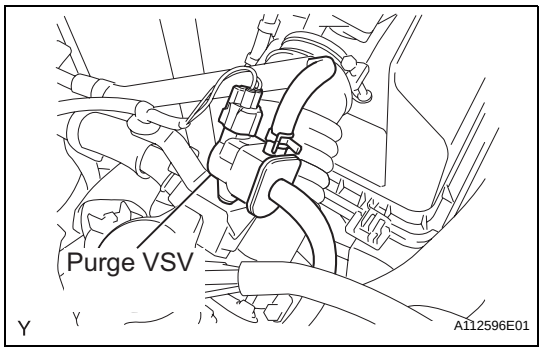

(a) Disconnect the connector and the hoses from the purge VSV.
(b) Remove the purge VSV.
(c) Install a new purge VSV.
(d) Reconnect the connector and hoses.

NEXT → Go to step 36

31 REPAIR OR REPLACE HARNESS OR CONNECTOR

NEXT → Go to step 36

32 REPLACE EVAP HOSE (INTAKE MANIFOLD - PURGE VSV)

NEXT → Go to step 36

33 INSPECT INTAKE MANIFOLD (EVAP PURGE PORT)

(a) Check that the EVAP purge port of the intake manifold is not clogged. If necessary, replace the intake manifold.

NEXT → Go to step 36

34 REPLACE ECM

(a) Replace the ECM (See page ES-431).

NEXT → Go to step 36

35 REPAIR OR REPLACE PARTS AND COMPONENTS INDICATED BY OUTPUT DTCS

(a) Repair the malfunctioning areas indicated by the DTCs that had been confirmed when the vehicle was brought in.

NEXT → Go to step 36

36	PERFORM EVAP SYSTEM CHECK (AUTO OPERATION)

NOTICE:

- **The EVAP SYSTEM CHECK (AUTO OPERATION) consists of five steps performed automatically by the intelligent tester. It takes a maximum of approximately 18 minutes.**
- **Do not perform the EVAP SYSTEM CHECK when the fuel tank is more than 90% full because the cut-off valve may be closed, making the fuel tank leak check unavailable.**
- **Do not run the engine in this step.**
- **When the temperature of the fuel is 35°C (95°F) or more, a large amount of vapor forms and any check results become inaccurate. When performing an EVAP SYSTEM CHECK, keep the temperature below 35°C (95°F).**

(a) Clear DTCs (See page ES-34).

(b) On the intelligent tester, select the following menu items: DIAGNOSIS / ENHANCED OBD II / SYSTEM CHECK / EVAP SYS CHECK / AUTO OPERATION.

(c) After the SYSTEM CHECK is completed, check for pending DTCs by selecting the following menu items: DIAGNOSIS / ENHANCED OBD II / DTC INFO / PENDING CODES.
HINT:
If no pending DTCs are found, the repair has been successfully completed.

ES

NEXT

COMPLETED

CONFIRMATION DRIVING PATTERN

HINT:
After a repair, check Monitor Status by performing the Key-Off Monitor Confirmation and Purge Flow Monitor Confirmation described below.

1. KEY-OFF MONITOR CONFIRMATION

(a) Preconditions
The monitor will not run unless:
- The vehicle has been driven for 10 minutes or more (in a city area or on a free way)
- The fuel tank is less than 90 % full
- The altitude is less than 8,000 ft (2,400 m)
- The Engine Coolant Temperature (ECT) is between 4.4°C and 35°C (40°F and 95°F)
- The Intake Air Temperature (IAT) is between 4.4°C and 35°C (40°F and 95°F)
- The vehicle remains stationary (the vehicle speed is 0 mph [0 km/h])

(b) Monitor Conditions
1. Allow the engine to idle for at least 5 minutes.
2. Turn the ignition switch to OFF and wait for 6 hours (8 or 10.5 hours).
HINT:
Do not start the engine until checking MONITOR STATUS. If the engine is started, the steps described above must be repeated.

(c) Monitor Status
1. Connect an intelligent tester to the DLC3.
2. Turn the ignition switch to ON and turn the tester ON.
3. Select the following menu items: DIAGNOSIS / ENHANCED OBD II / MONITOR STATUS.
4. Check the Monitor Status displayed on the tester.
HINT:
If INCMP is displayed, the monitor is not complete. Make sure that the preconditions have been met, and perform the Monitor Conditions again.

2. PURGE FLOW MONITOR CONFIRMATION (P0441)

HINT:
Perform this monitor confirmation after the Key-Off Monitor Confirmation shows COMPL (complete).

(a) Preconditions
The monitor will not run unless:
- The vehicle has been driven for 10 minutes or more (in a city area or on a free way)
- The ECT is between 4.4°C and 35°C (40°F and 95°F)
- The IAT is between 4.4°C and 35°C (40°F and 95°F)

(b) Monitor Conditions
1. Release the pressure from the fuel tank by removing and reinstalling the fuel cap.
2. Warm the engine up until the ECT reaches more than 75°C (167°F).
3. Increase the engine speed to 3,000 rpm once.
4. Allow the engine to idle and turn A/C ON for 1 minute.

(c) Monitor Status
1. Turn the ignition switch to OFF (where ON or the engine is running).
2. Connect an intelligent tester to the DLC3.
3. Turn the ignition switch to ON and turn the tester ON.
4. Select the following menu items: DIAGNOSIS / ENHANCED OBD II / MONITOR STATUS.
5. Check the Monitor Status displayed on the tester.
HINT:
If INCMP is displayed, the monitor is not complete. Make sure that the preconditions have been met, and perform the Monitor Conditions again.

MONITOR RESULT

Refer to CHECKING MONITOR STATUS (See page ES-17).
The test value and test limit information are described in the following table. This information is included under MONITOR RESULT in the emissions-related DTC sections:
- MID (Monitor Identification Data) is assigned to each emissions-related component.
- TID (Test Identification Data) is assigned to each test value.
- Scaling is used to calculate the test value indicated on generic OBD II scan tools.

EVAP - Key-off Type

MID	TID	Scaling	Unit	Description
$3D	$C9	Multiply by 0.001	kPa	Test value for small leak (P0456) Refer to pressure D*
$3D	$CA	Multiply by 0.001	kPa	Test value for gross leak (P0455) Refer to pressure E*
$3D	$CB	Multiply by 0.001	kPa	Test value for leak detection pump stuck OFF (P2401) Refer to pressure A*
$3D	$CD	Multiply by 0.001	kPa	Test value for leak detection pump stuck ON (P2402) Refer to pressure A*
$3D	$CE	Multiply by 0.001	kPa	Test value for vent valve stuck OFF (vent) (P2420) Refer to pressure C*
$3D	$CF	Multiply by 0.001	kPa	Test value for vent valve stuck ON (P2419) Refer to pressure A*
$3D	$D0	Multiply by 0.001	kPa	Test value for reference orifice low flow (P043E) Refer to pressure B*

MID	TID	Scaling	Unit	Description
$3D	$D1	Multiply by 0.001	kPa	Test value for reference orifice high flow (P043F) Refer to pressure A*
$3D	$D4	Multiply by 0.001	kPa	Test value for purge VSV stuck closed (P0441) Refer to pressure F*
$3D	$D5	Multiply by 0.001	kPa	Test value for purge VSV stuck open (P0441) Refer to pressure E*
$3D	$D7	Multiply by 0.001	kPa	Test value for purge flow insufficient (P0441) Refer to pressure G*

* Pressures A to G are indicated in the diagram below.

ES

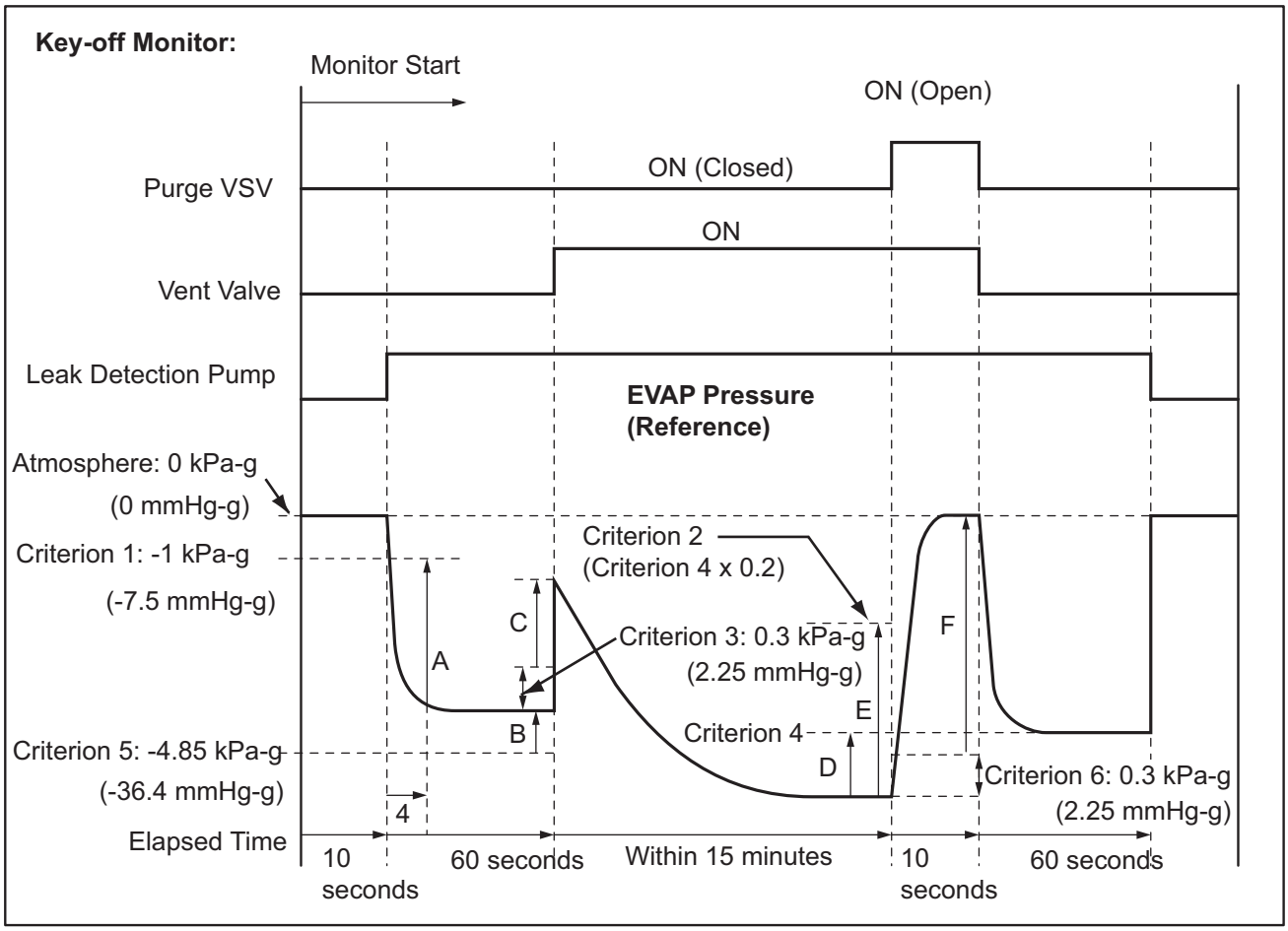

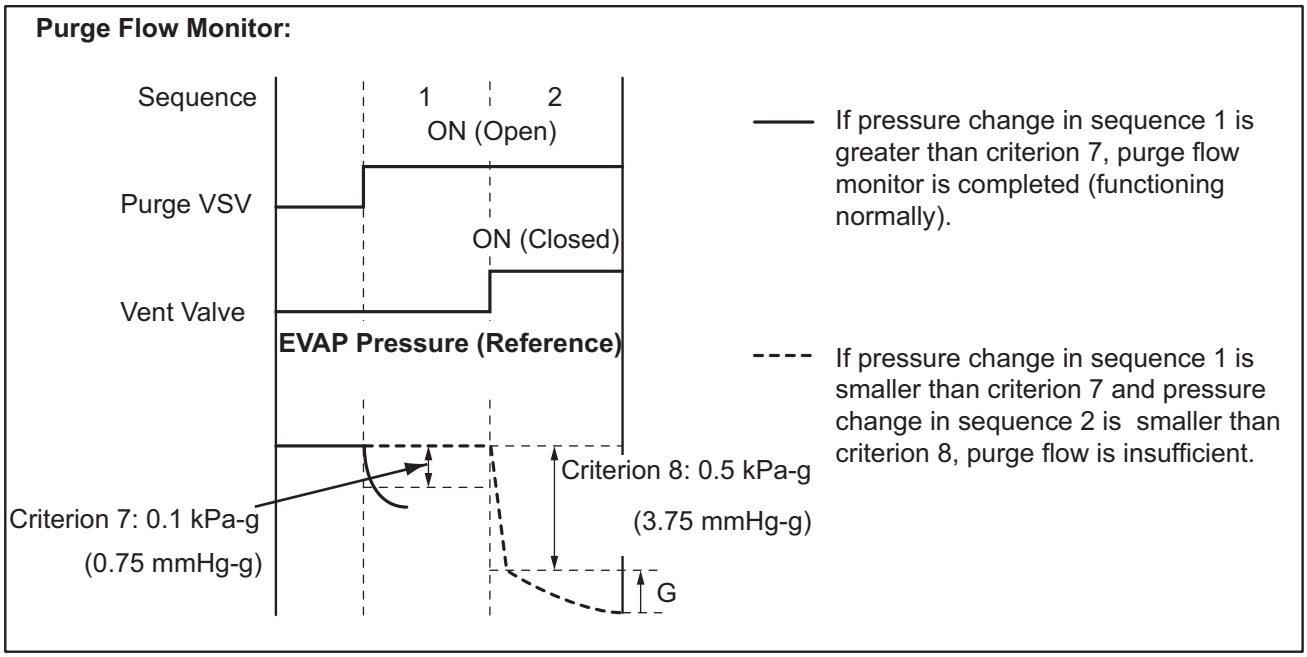

Y

A106747E07

ECM Power Source Circuit

DESCRIPTION

When the ignition switch is turned to ON, the battery voltage is applied to the IGSW of the ECM. The output signal from the MREL terminal of the ECM causes a current to flow to the coil, closing the contacts of the integration relay (EFI relay) and supplying power to either terminal +B or +B2 of the ECM.

WIRING DIAGRAM

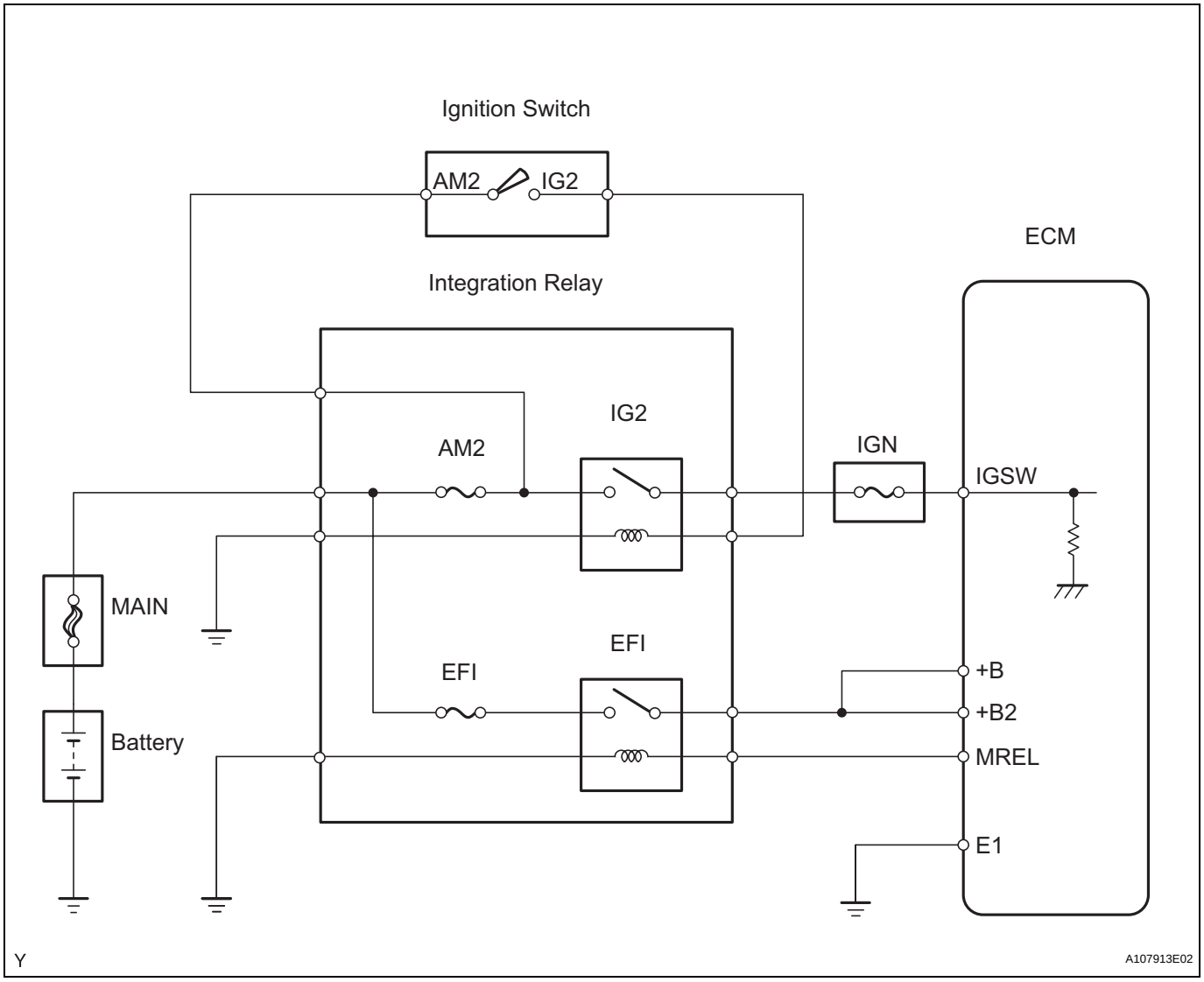

INSPECTION PROCEDURE

1 INSPECT INTEGRATION RELAY (INTEGRATION RELAY - BODY GROUND)

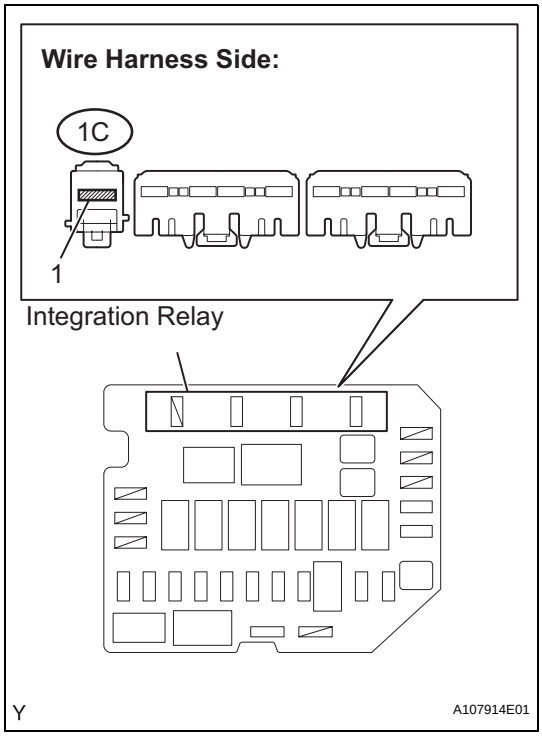

(a) Remove the integration relay from the engine room relay block.

(b) Measure the voltage between the terminal of the integration relay and body ground.

Standard voltage

Tester Connections	Specified Conditions
Engine room relay block (1C-1) - Body ground	11 to 14 V

(c) Reinstall the integration relay.

NG → **REPAIR OR REPLACE HARNESS OR CONNECTOR**

OK

2 INSPECT INTEGRATION RELAY (EFI RELAY AND IG2 RELAY)

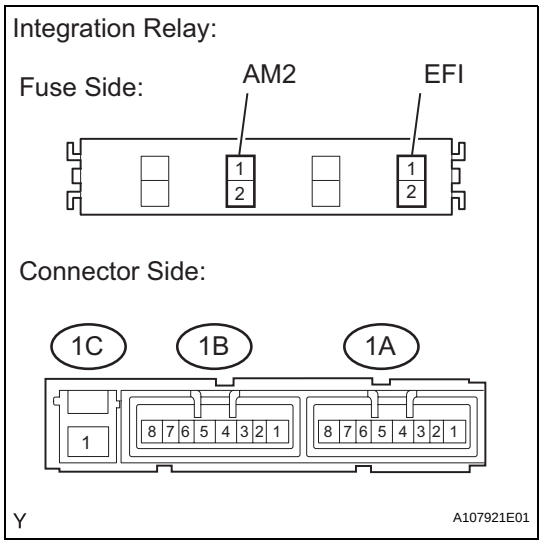

(a) Remove the integration relay from the engine room relay block.

(b) Inspect the EFI fuse and the AM2 fuse.
  (1) Remove the EFI fuse and AM2 fuse from the integration relay.
  (2) Check the resistance of the EFI fuse and AM2 fuse.
  Standard resistance:
  Below 1 Ω
  (3) Reinstall the EFI fuse and the AM2 fuse.

(c) Inspect the EFI relay and the IG2 relay.
  (1) Check the resistance between the terminals shown below.
  Standard resistance

Tester Connections	Specified Conditions
1C-1 - 1A-4	10 kΩ or higher
	Below 1 Ω (when battery voltage is applied to terminals 1A-2 and 1A-3)
1C-1 - 1B-4	10 kΩ or higher
	Below 1 Ω (when battery voltage is applied to terminals 1A-2 and 1A-3)
1C-1 - 1B-1	Below 1 Ω

(2) Reinstall the integration relay.

NG → **REPLACE INTEGRATION RELAY**

OK

3 CHECK HARNESS AND CONNECTOR (+B, +B2 AND MREL CIRCUIT)

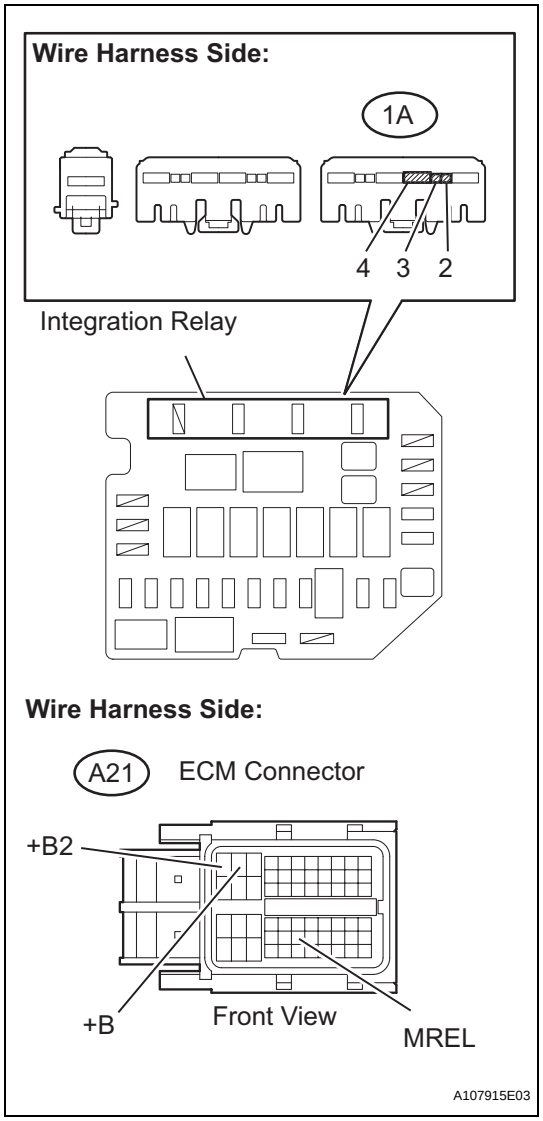

(a) Check the harness and the connectors between the integration relay and the ECM.
   (1) Remove the integration relay from the engine room relay block.
   (2) Disconnect the A21 ECM connector.
   (3) Check the resistance.

Standard resistance (Check for open)

Tester Connections	Specified Conditions
MREL (A21-44) - Engine room relay block (1A-2)	Below 1 Ω
+B (A21-2) - Engine room relay block (1A-4)	
+B2 (A21-1) - Engine room relay block (1A-4)	

Standard resistance (Check for short)

Tester Connections	Specified Conditions
MREL (A21-44) or Engine room relay block (1A-2) - Body ground	10 kΩ or higher
+B (A21-2) or Engine room relay block (1A-4) - Body ground	
+B2 (A21-1) or Engine room relay block (1A-4) - Body ground	

(b) Check the harness and the connectors between the integration relay and body ground.
   (1) Check the resistance.

Standard resistance (Check for open)

Tester Connections	Specified Conditions
Engine room relay block (1A-3) - Body ground	Below 1 Ω

(c) Reinstall the integration relay.
(d) Reconnect the ECM connector.

NG → **REPAIR OR REPLACE HARNESS OR CONNECTOR**

OK

ES

ES

4 CHECK HARNESS AND CONNECTOR (ECM - BODY GROUND)

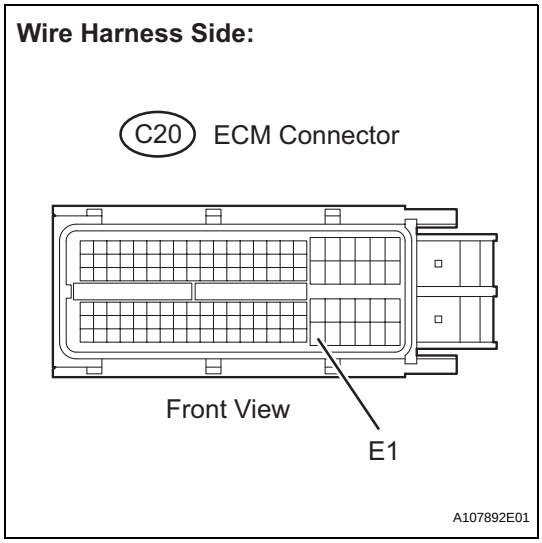

(a) Disconnect the C20 ECM connector.
(b) Check the resistance.
Standard resistance (Check for open)

Tester Connections	Specified Conditions
E1 (C20-104) - Body ground	Below 1 Ω

(c) Reconnect the ECM connector.

NG → **REPAIR OR REPLACE HARNESS OR CONNECTOR**

OK

5 INSPECT ECM (IGSW VOLTAGE)

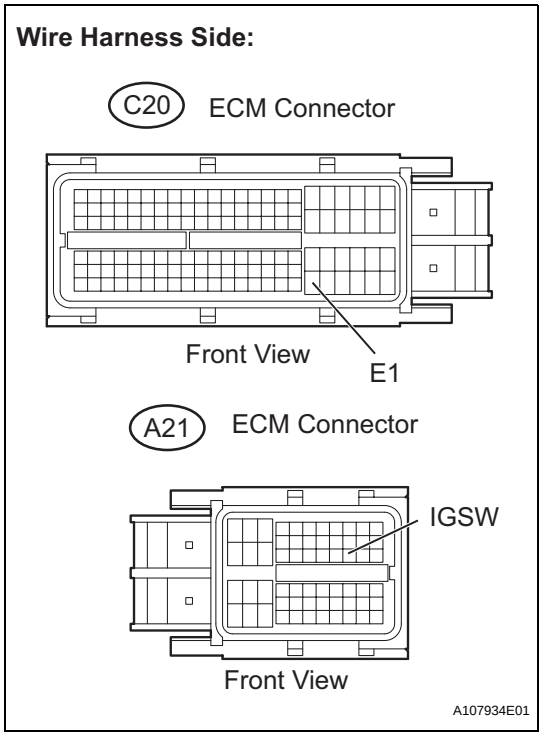

(a) Disconnect the C20 and A21 ECM connectors.
(b) Turn the ignition switch to ON.
(c) Measure the voltage between the terminals of the C20 and A21 ECM connectors.
Standard voltage

Tester Connections	Specified Conditions
IGSW (A21-28) - E1 (C20-104)	11 to 14 V

(d) Reconnect the ECM connectors.

OK → **REPLACE ECM**

NG

6	INSPECT FUSE (IGN FUSE)

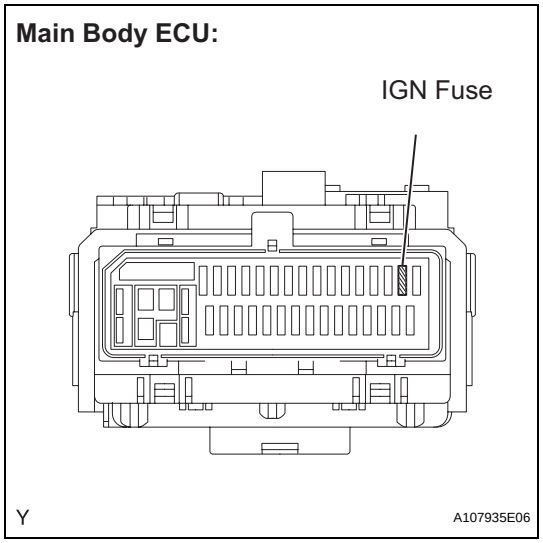

(a) Remove the IGN fuse from the main body ECU.
(b) Check the IGN fuse resistance.
Standard resistance:
Below 1 Ω
(c) Reinstall the IGN fuse.

NG → **CHECK FOR SHORTS IN ALL HARNESSES AND CONNECTORS CONNECTED TO FUSE AND REPLACE FUSE**

OK

ES

7	CHECK HARNESS AND CONNECTOR (INTEGRATION RELAY - ECM, INTEGRATION RELAY - BODY GROUND)

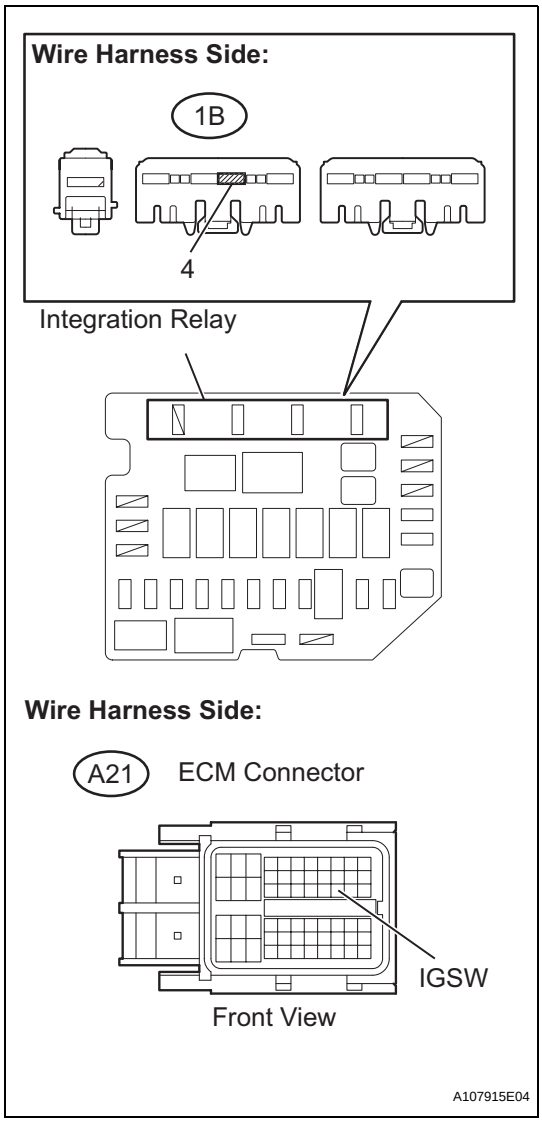

(a) Remove the integration relay from the engine room relay block.
(b) Disconnect the A21 ECM connector.
(c) Check the resistance.

Standard resistance (Check for open)

Tester Connections	Specified Conditions
Engine room relay block (1B-4) - IGSW (A21-28)	Below 1 Ω

Standard resistance (Check for short)

Tester Connections	Specified Conditions
Engine room relay block (1B-4) or IGSW (A21-28) - Body ground	10 kΩ or higher

(d) Reinstall the integration relay.
(e) Reconnect the ECM connector.

NG → **REPAIR OR REPLACE HARNESS OR CONNECTOR**

OK

8	CHECK HARNESS AND CONNECTOR (INTEGRATION RELAY - IGNITION SWITCH ASSEMBLY)

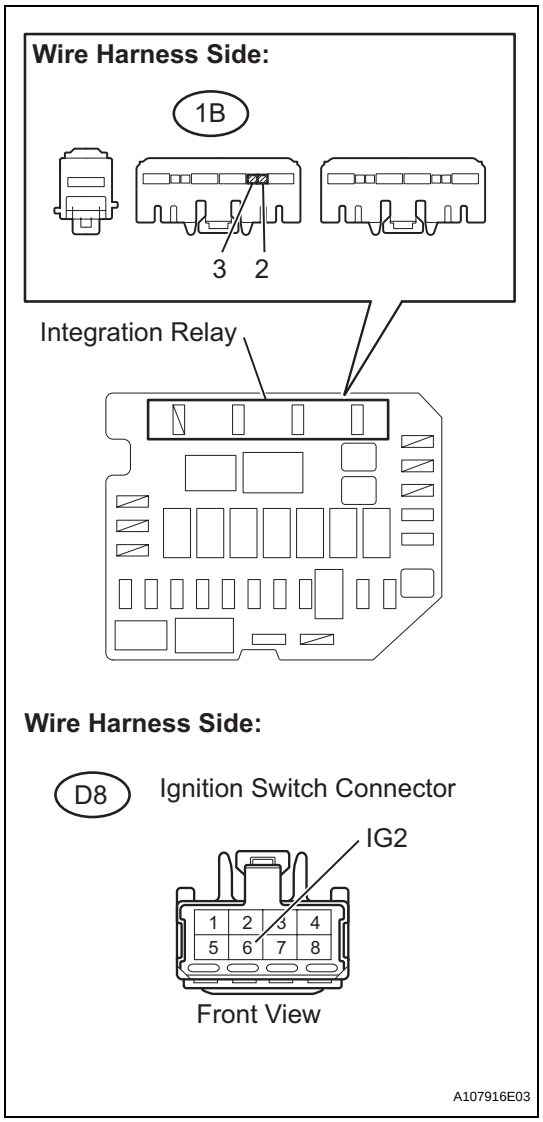

(a) Check the harness and the connectors between the integration relay and the ignition switch.
  (1) Remove the integration relay from the engine room relay block.
  (2) Disconnect the D8 ignition switch connector.
  (3) Check the resistance.
  Standard resistance (Check for open)

Tester Connections	Specified Conditions
Engine room relay block (1B-2) - IG2 (D8-6)	Below 1 Ω

Standard resistance (Check for short)

Tester Connections	Specified Conditions
Engine room relay block (1B-2) or IG2 (D8-6) - Body ground	10 kΩ or higher

(b) Check the harness and the connectors between the integration relay and body ground.
  (1) Check the resistance.
  Standard resistance (Check for open)

Tester Connections	Specified Conditions
Engine room relay block (1B-3) - Body ground	Below 1 Ω

(c) Reinstall the integration relay.
(d) Reconnect the ignition switch connector.

NG → **REPAIR OR REPLACE HARNESS OR CONNECTOR**

OK

ES

9	INSPECT IGNITION OR STARTER SWITCH ASSEMBLY

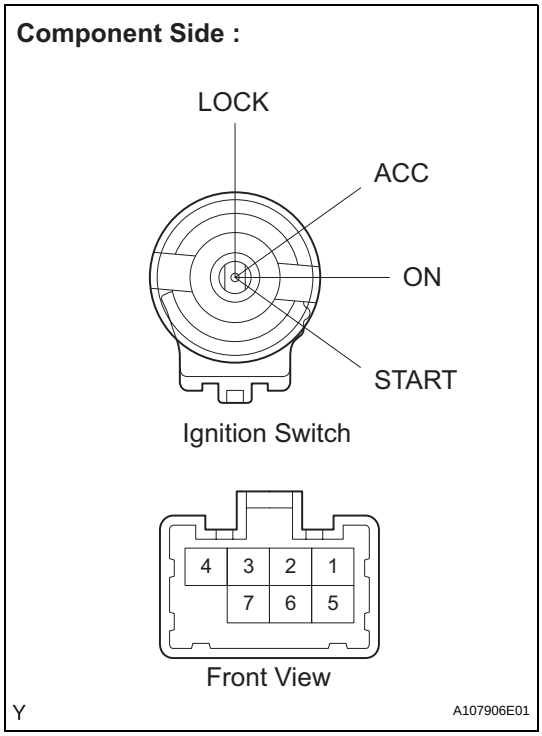

(a) Disconnect the D8 ignition switch connector.

(b) Check the resistance between the terminals shown below.

Standard resistance

Key Positions	Tester Connections	Specified Conditions
LOCK	-	10 kΩ or higher
ACC	2-4	Below 1 Ω
ON	1-2-4	
	5-6	
START	1-3-4	
	5-6-7	

(c) Reconnect the ignition switch connector.

NG → **REPLACE IGNITION OR STARTER SWITCH ASSEMBLY**

OK

REPAIR OR REPLACE HARNESS OR CONNECTOR

VC Output Circuit

DESCRIPTION

The ECM constantly generates 5 V power from the battery voltages supplied to the +B (BATT) terminal to operate the microprocessor. The ECM also provides this power to the sensors through the VC output circuit.

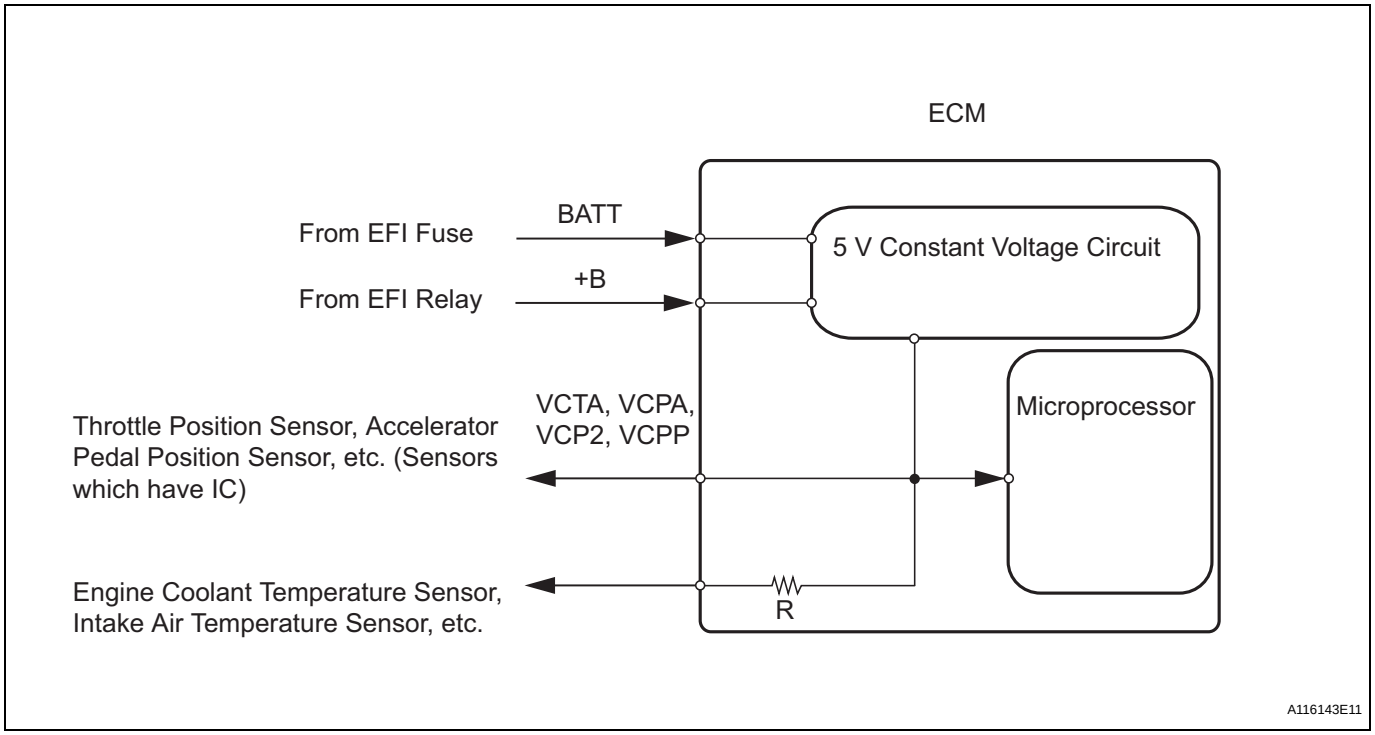

When the VC circuit is short-circuited, the microprocessor in the ECM and sensors that are supplied with power through the VC circuit are inactivated because the power is not supplied from the VC circuit. Under this condition, the system does not start up and the MIL does not illuminate even if the system malfunctions.

HINT:

Under normal conditions, the MIL is illuminated for several seconds when the ignition switch is first turned to ON. The MIL goes off when the engine is started.

WIRING DIAGRAM

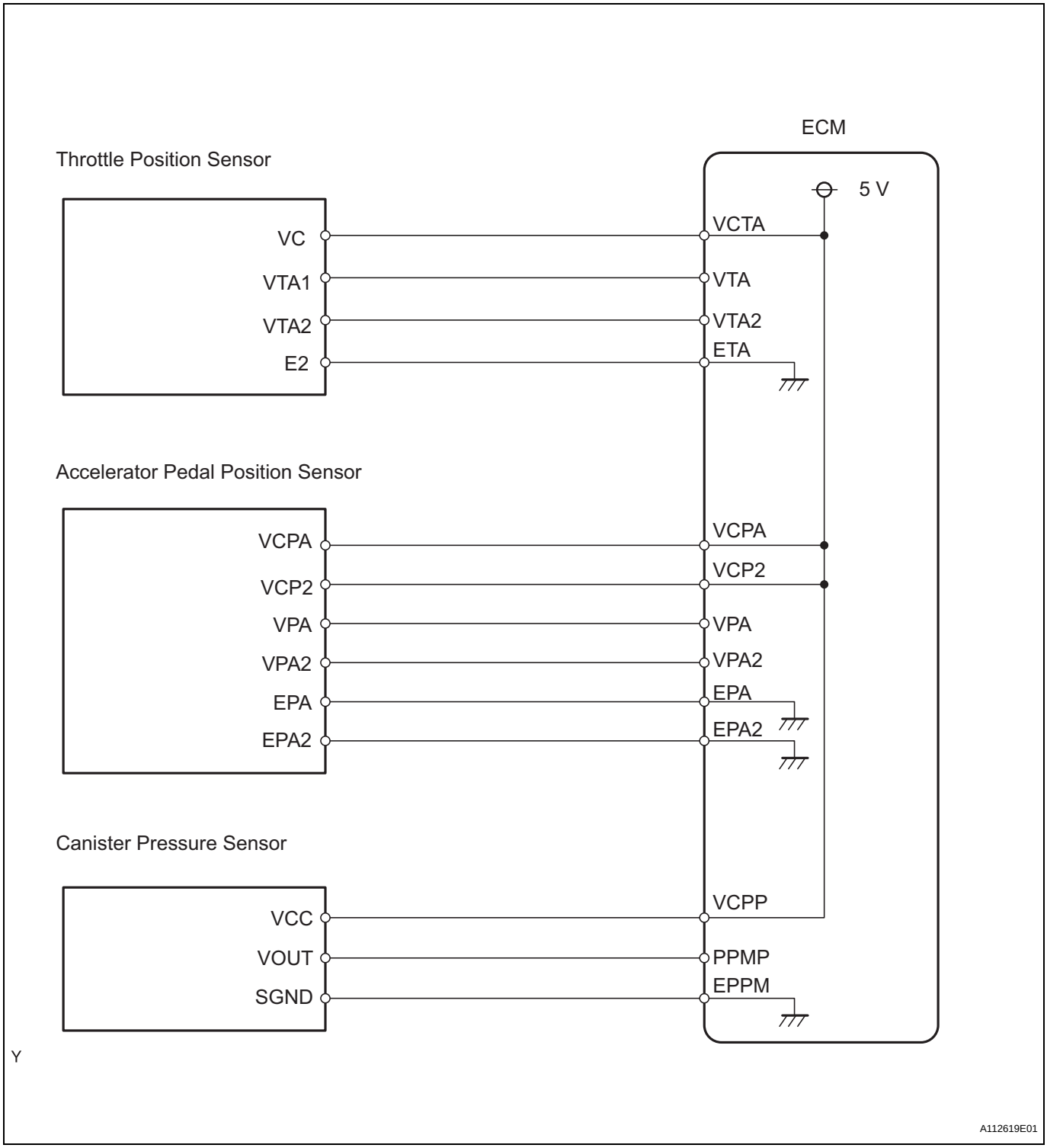

INSPECTION PROCEDURE

1	CHECK MIL

(a) Check that Malfunction Indicator Lamp (MIL) lights up when turning the ignition switch ON.

OK:
MIL lights up

OK → **SYSTEM OK**

NG

2 CHECK COMMUNICATION BETWEEN INTELLIGENT TESTER AND ECM

(a) Connect the intelligent tester to the DLC3.
(b) Turn the ignition switch to ON and tester ON.
(c) Check the communication between the tester and ECM.

Result

Result	Proceed To
Communication is possible	A
Communication is not possible	B

A → **GO TO MIL CIRCUIT**

B

3 CHECK MIL (THROTTLE POSITION SENSOR)

(a) Disconnect the C17 throttle body connector.
(b) Turn the ignition switch to ON.
(c) Check the MIL.

Result

Result	Proceed To
MIL illuminates	A
MIL does not illuminate	B

(d) Reconnect the throttle body connector.

A → **REPLACE THROTTLE BODY ASSEMBLY**

B

4 CHECK MIL (ACCELERATOR PEDAL POSITION SENSOR)

(a) Disconnect the A20 accelerator pedal position sensor connector.
(b) Turn the ignition switch to ON.
(c) Check the MIL.

Result

Result	Proceed To
MIL illuminates	A
MIL does not illuminate	B

(d) Reconnect the accelerator pedal position sensor connector.

A → **REPLACE ACCELERATOR PEDAL POSITION SENSOR**

B

5 CHECK MIL (CANISTER PUMP MODULE)

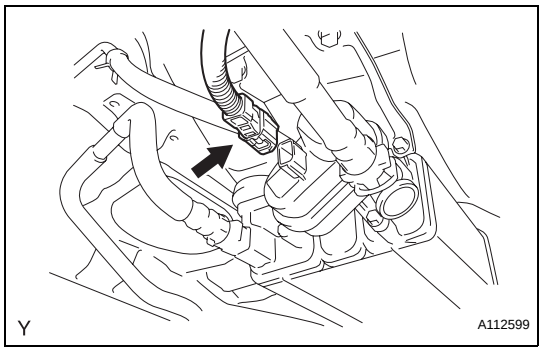

(a) Disconnect the J25 canister pump module connector.
(b) Turn the ignition switch to ON.
(c) Check the MIL.

Result

Result	Proceed To
MIL illuminates	A
MIL does not illuminate	B

(d) Reconnect the canister pump module connector.

A → **REPLACE CHARCOAL CANISTER ASSEMBLY**

B

6 CHECK HARNESS AND CONNECTOR

(a) Disconnect the C17 throttle body connector.
(b) Disconnect the A20 accelerator pedal position sensor connector.
(c) Disconnect the J25 canister pump module connector.

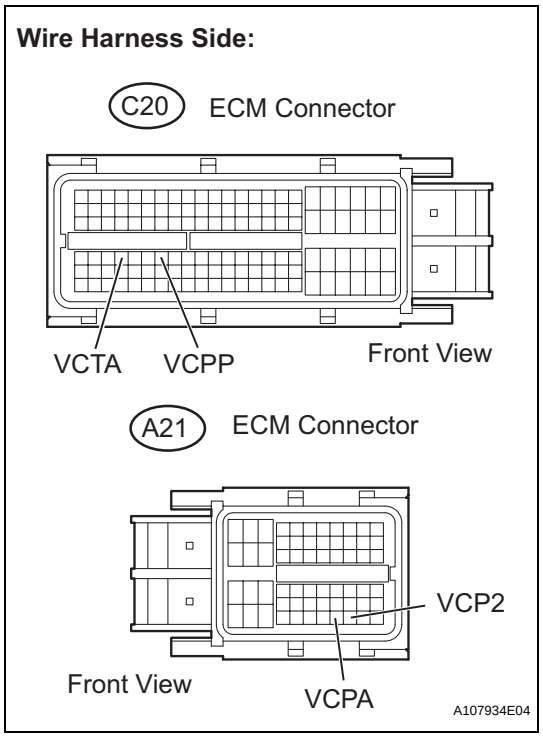

(d) Disconnect the A21 and C20 ECM connectors.
(e) Check the resistance.

Standard resistance (Check for short)

Tester Connections	Specified Conditions
VCTA (C20-67) - Body ground	10 kΩ or higher
VCPA (A21-57) - Body ground	
VCP2 (A21-58) - Body ground	
VCPP (C20-70) - Body ground	

(f) Reconnect the throttle body connector.
(g) Reconnect the accelerator pedal position sensor connector.
(h) Reconnect the canister pump module connector.
(i) Reconnect the ECM connectors.

NG → **REPAIR OR REPLACE HARNESS OR CONNECTOR**

OK

REPLACE ECM

ES

ES

Fuel Pump Control Circuit

DESCRIPTION

When the engine is cranked, the starter relay drive signal output from the STAR terminal of the ECM is input into the STA terminal of the ECM, and NE signal generated by the crankshaft position sensor is also input into the NE+ terminal. Thus, the ECM interprets that the engine is cranked, and turns the transistor Tr1 in the ECM internal circuit ON. The current flows to the C/OPN (Circuit Opening) relay by turning the Tr1 ON. Then, the fuel pump operates.
While the NE signal is input into the ECM, when engine is running, the ECM turns the Tr1 on continuously.

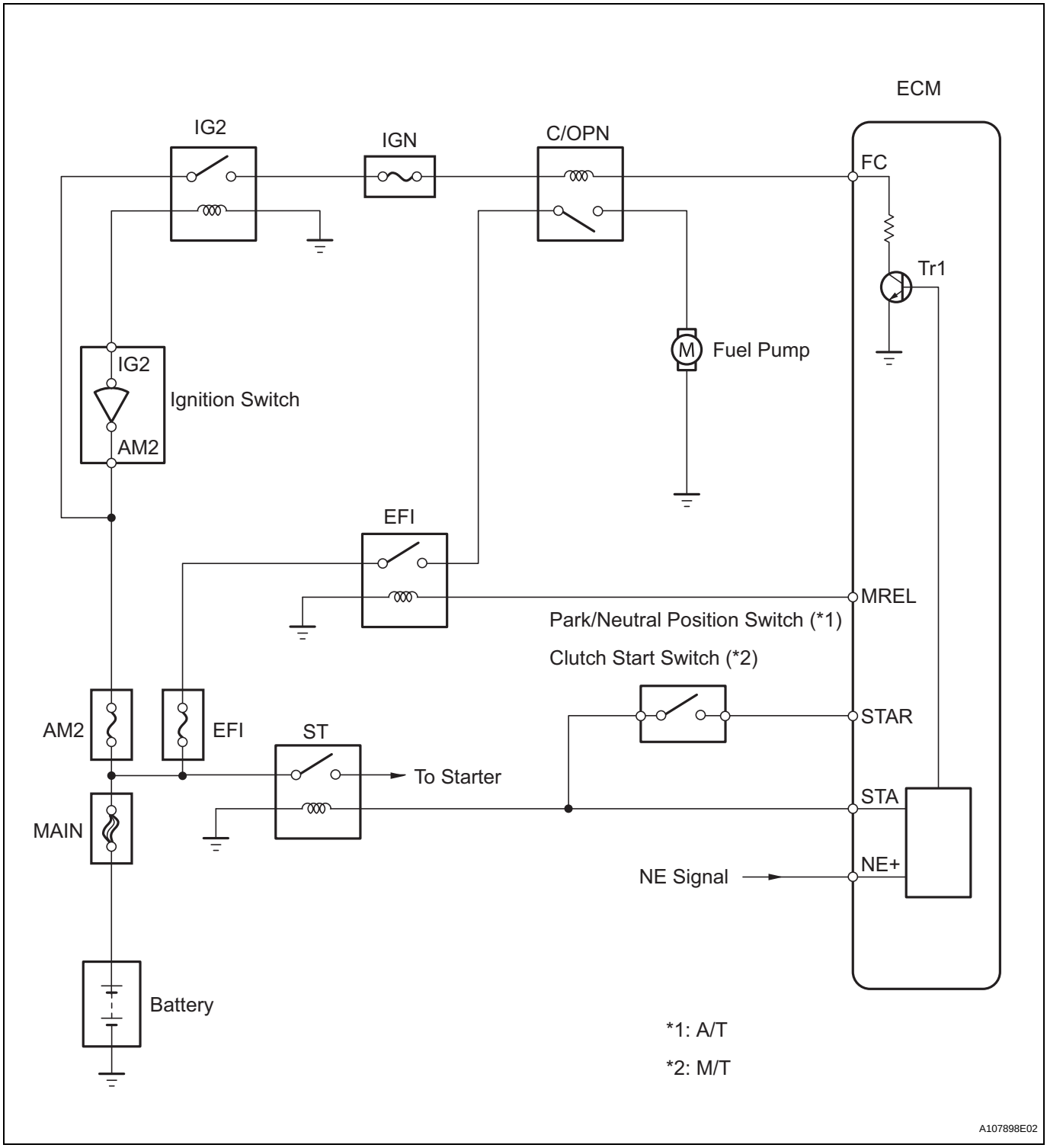

WIRING DIAGRAM

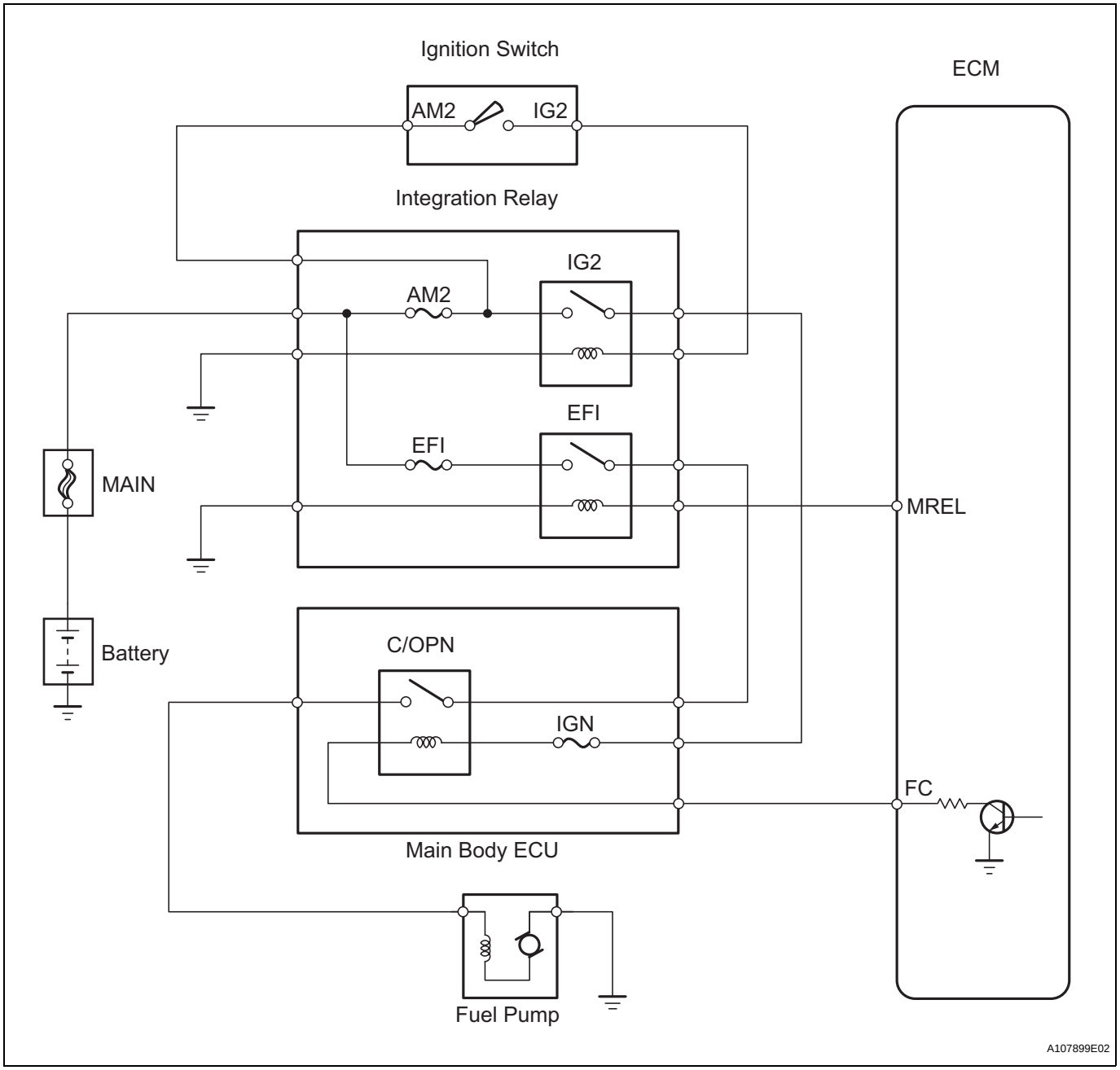

INSPECTION PROCEDURE

1	PERFORM ACTIVE TEST USING INTELLIGENT TESTER (FUEL PUMP/SPD)

(a) Connect an intelligent tester to the DLC3.
(b) Turn the ignition switch to ON and turn the tester ON.
(c) Select the following menu items: DIAGNOSIS / ENHANCED OBD II / ACTIVE TEST / FUEL PUMP/ SPD.
(d) Check whether the fuel pump operating sound occurs when perform the Active Test on the tester.
OK:
Fuel pump operating sound occurs.

ES

OK → Go to step 8

NG

2 INSPECT MAIN BODY ECU (C/OPN RELAY INPUT VOLTAGE)

Main Body ECU:

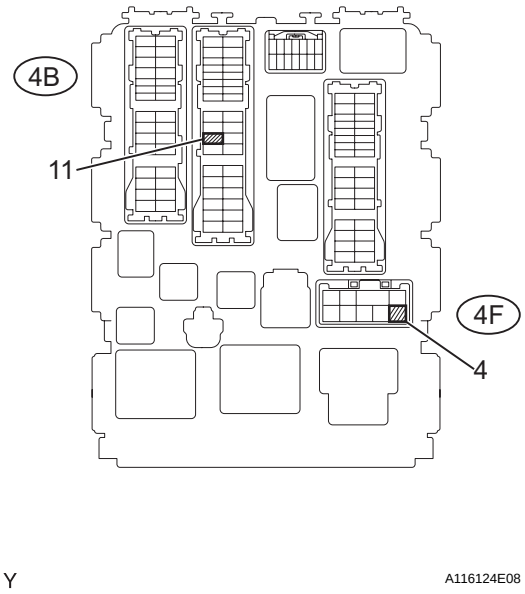

(a) Measure the voltage between the terminal of the main body ECU and the body ground when the ignition switch is turned to ON and OFF.

Standard voltage

Tester Connections	Ignition Switch Conditions	Specified Conditions
4B-11 - Body ground	OFF	Below 1 V
4F-4 - Body ground		
4B-11 - Body ground	ON	11 to 14 V
4F-4 - Body ground		

OK → Go to step 4

NG

3	CHECK HARNESS AND CONNECTOR (MAIN BODY ECU - INTEGRATION RELAY)

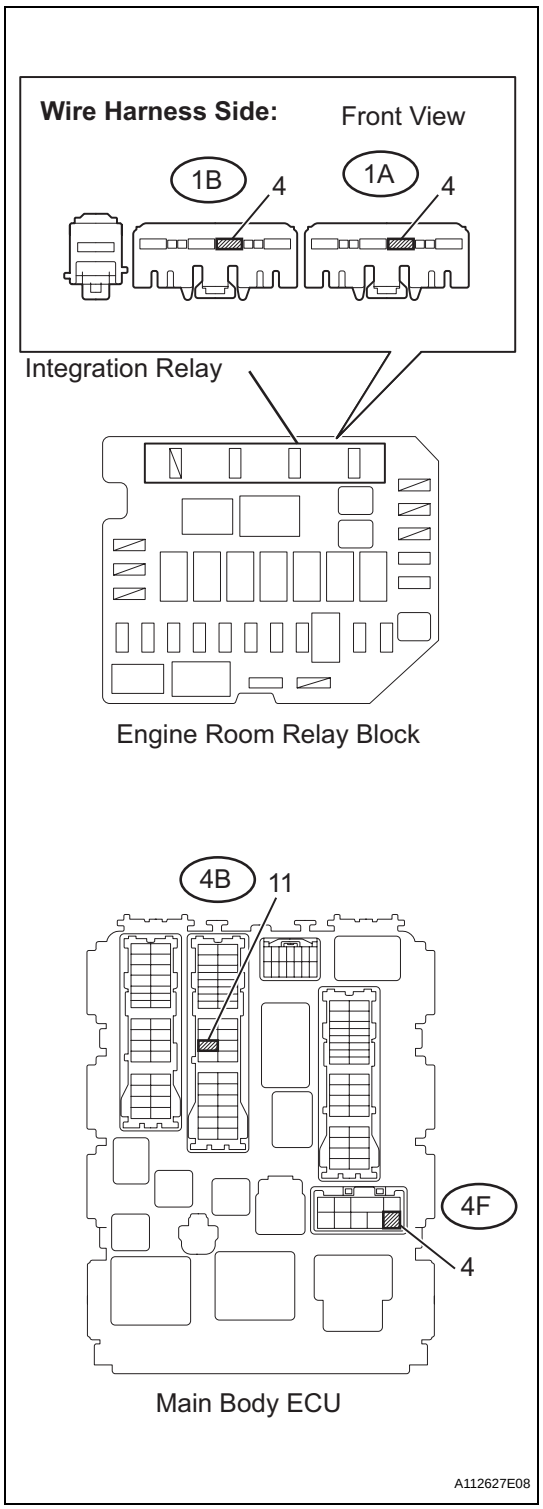

(a) Remove the integration relay from the engine room relay block.
(b) Disconnect the main body ECU connector.
(c) Check the resistance.

Standard resistance (Check for open)

Tester Connections	Specified Conditions
1B-4 - 4F-4	Below 1 Ω
1A-4 - 4B-11	

Standard resistance (Check for short)

Tester Connections	Specified Conditions
4F-4 - Body ground	10 kΩ or higher
4B-11 - Body ground	

(d) Reinstall the integration relay.
(e) Reconnect the main body ECU connector.

NG → **REPAIR OR REPLACE HARNESS OR CONNECTOR**

OK

GO TO ECM POWER SOURCE CIRCUIT

ES

4	INSPECT MAIN BODY ECU (C/OPN RELAY)

Main Body ECU:

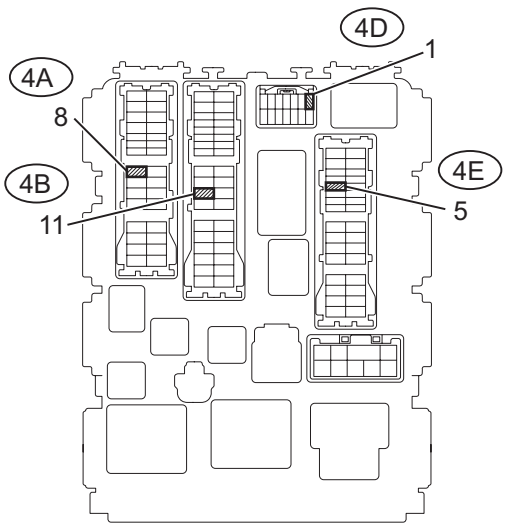

Y A116124E07

(a) Remove the main body ECU.
(b) Check the C/OPN relay resistance.
Standard resistance

Tester Connections	Specified Conditions
4B-11 - 4A-8	10 kΩ or higher
	Below 1 Ω (when battery voltage is applied to terminals 4D-1 and 4E-5)

HINT:
Relay coil circuit between 4D-1 and 4E-5 is not through IGN fuse.

(c) Reinstall the main body ECU.

NG → **REPLACE MAIN BODY ECU**

OK

ES

5 CHECK HARNESS AND CONNECTOR (MAIN BODY ECU - ECM)

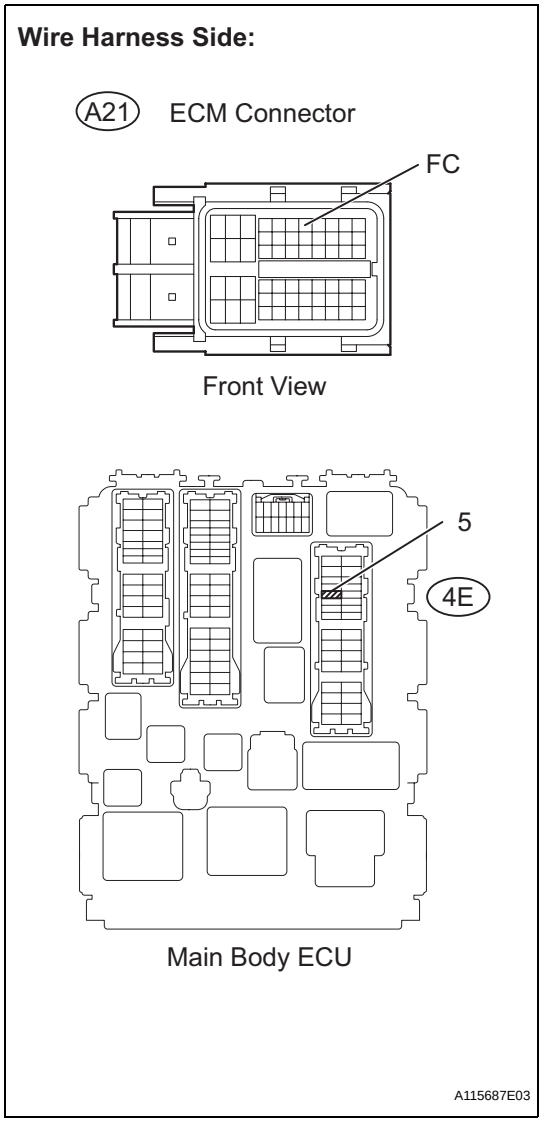

(a) Disconnect the A21 ECM connector.
(b) Disconnect the 4E connector from main body ECU.
(c) Check the resistance.

Standard resistance (Check for open)

Tester Connections	Specified Conditions
Main Body ECU (4E-5) - FC (A21-7)	Below 1 Ω

Standard resistance (Check for short)

Tester Connections	Specified Conditions
Main body ECU (4E-5) or FC (A21-7) - Body ground	10 kΩ or higher

(d) Reconnect the main body ECU and the ECM connectors.

NG → **REPAIR OR REPLACE HARNESS OR CONNECTOR**

OK

ES

ES

6 CHECK HARNESS AND CONNECTOR (C/OPN RELAY - FUEL PUMP - BODY GROUND)

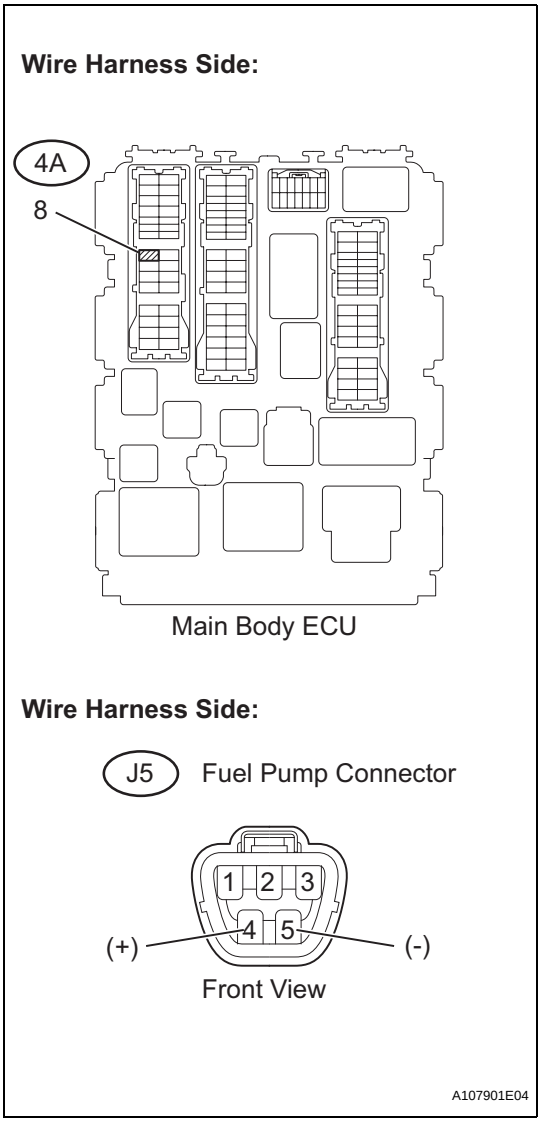

(a) Check the harness and the connectors between the main body ECU and the fuel pump.
  (1) Disconnect the 4A main body ECU connector.
  (2) Disconnect the J5 fuel pump connector.
  (3) Check the resistance.
  Standard resistance (Check for open)

Tester Connections	Specified Conditions
Main body ECU (4A-8) - Fuel pump (J5-4)	Below 1 Ω

Standard resistance (Check for short)

Tester Connections	Specified Conditions
Main body ECU (4A-8) or Fuel pump (J5-4) - Body ground	10 kΩ or higher

(b) Check the harness and the connectors between the fuel pump and the body ground.
  (1) Disconnect the J5 fuel pump connector.
  (2) Check the resistance.
  Standard resistance (Check for open)

Tester Connections	Specified Conditions
Fuel pump (J5-5) - Body ground	Below 1 Ω

(c) Reconnect the main body ECU connector.
(d) Reconnect the fuel pump connector.

NG → **REPAIR OR REPLACE HARNESS OR CONNECTOR**

OK

7 INSPECT FUEL PUMP

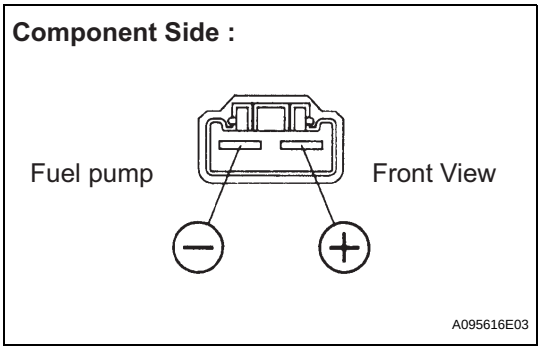

(a) Inspect fuel pump resistance.
  (1) Measure the resistance between the terminals.
  Standard resistance:
  0.2 to 3.0 Ω at 20°C (68°F)

(b) Inspect fuel pump operation.
  (1) Apply the battery voltage to both the terminals. Check that the pump operates.
  NOTICE:
  - **These tests must be done quickly (within 10 seconds) to prevent the coil from burning out.**
  - **Keep the fuel pump as far away from the battery as possible.**

- **Always switch at the battery side.**

NG → **REPLACE FUEL PUMP**

OK

REPLACE ECM

8 READ VALUE USING INTELLIGENT TESTER (STARTER SIG)

(a) Connect the intelligent tester to the DLC3.
(b) Turn the ignition switch to ON and turn the tester ON.
(c) Select the following menu items: DIAGNOSIS / ENHANCED OBD II / DATA LIST / PRIMARY / STARTER SIG.
(d) Check the result when the ignition switch is turned to ON and START.
Standard

Ignition Switch Position	ON	START
Starter Signal	OFF	ON

NG → **REPAIR OR REPLACE STARTING SYSTEM**

OK

9 READ VALUE USING INTELLIGENT TESTER (ENGINE SPD)

(a) Connect the intelligent tester to the DLC3.
(b) Turn the ignition switch to ON and turn the tester ON.
(c) Select the following menu items: DIAGNOSIS / ENHANCED OBD II / DATA LIST / PRIMARY / ENGINE SPD.
(d) Read the values displayed on the tester while cranking.
Standard:
Values are displayed continuously.

NG → **REPAIR OR REPLACE CRANKSHAFT POSITION SENSOR CIRCUIT**

OK

REPLACE ECM

ES

Cranking Holding Function Circuit

DESCRIPTION

The cranking holding control system provides a current to the starter when the ECM detects the ignition switch's start signal (STSW). When the ECM judges that the engine has started, the system cuts the current to the starter. When the ECM receives the STSW signal, it turns on the ACC (Accessory) relay, which prevents flickering of the combination meter, clock and audio system. Also, the ECM sends a signal to the ECM's STAR terminal. Then the STAR output signal travels through the Park/Neutral Position (PNP) switch to the ST relay, causing the starter to activate. When the engine is cranking, the starter operation signal is sent to the ECM's STA terminal.

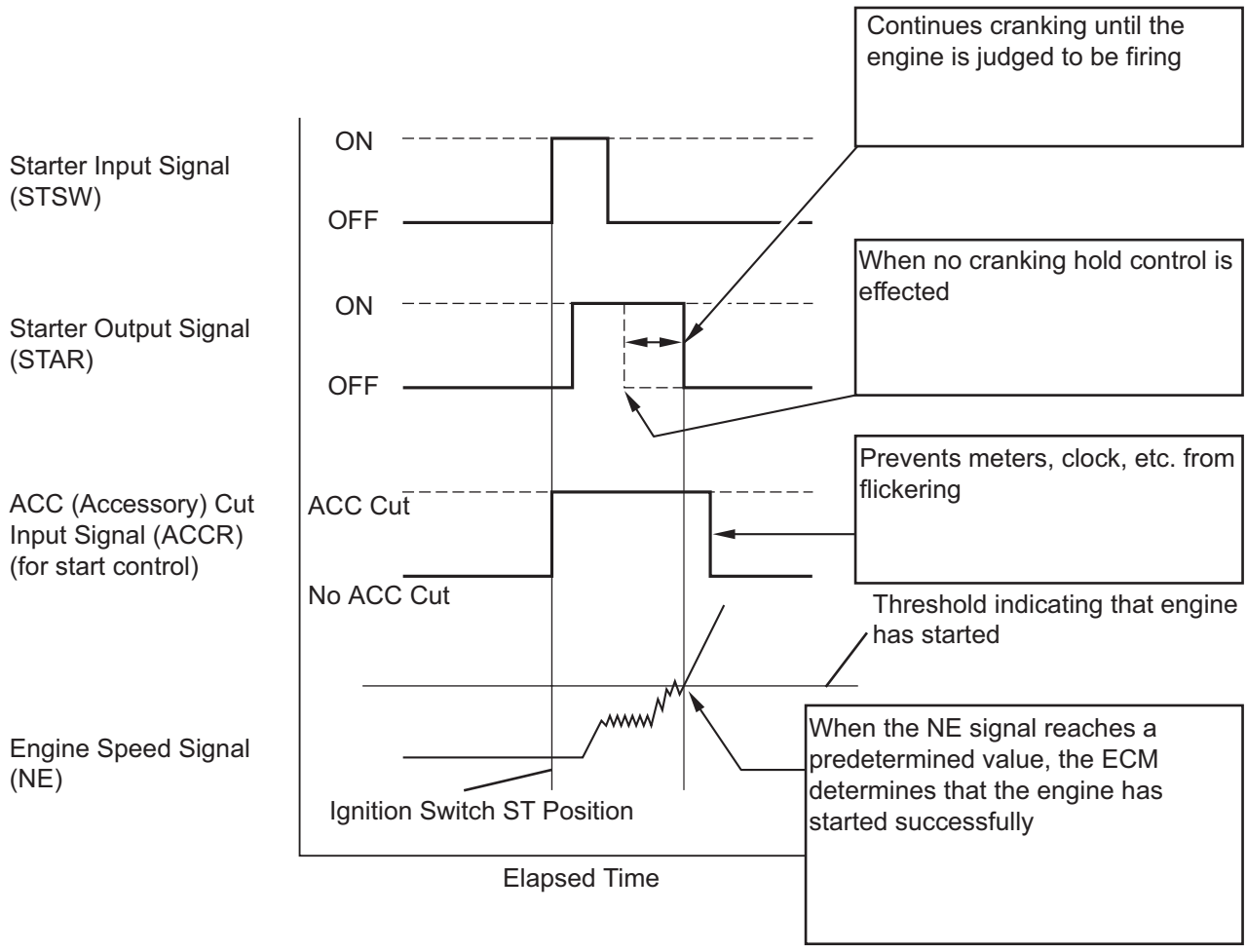

A103821E16

WIRING DIAGRAM

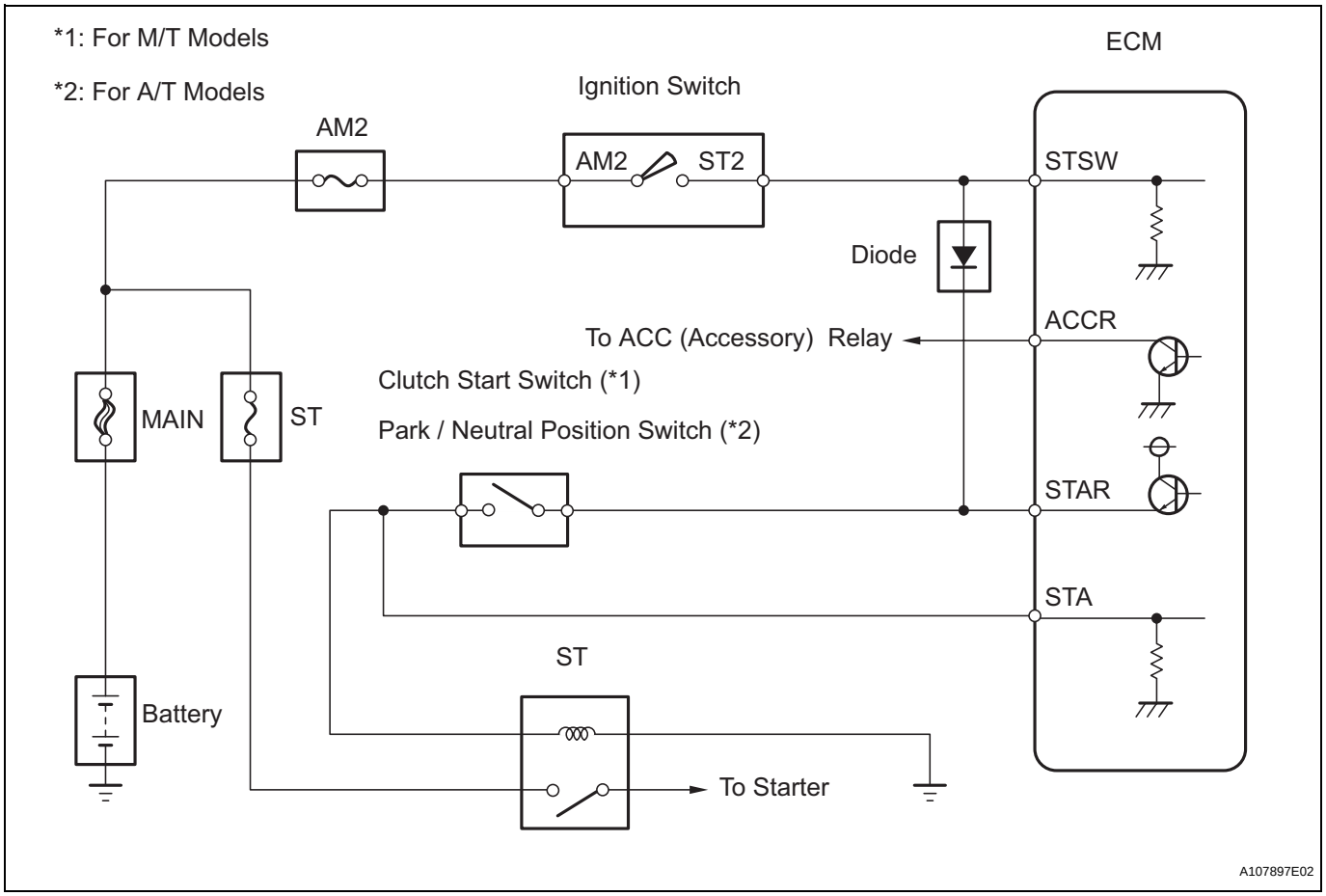

INSPECTION PROCEDURE

1	READ VALUE USING INTELLIGENT TESTER (STARTER SIG)

(a) Connect an intelligent tester to the DLC3.
(b) Turn the ignition switch to ON and turn the tester ON.
(c) Select the following menu items: DIAGNOSIS / ENHANCED OBD II / DATA LIST / PRIMARY / STARTER SIG.
(d) Check the result when the ignition switch is turned to ON and START.
OK

Ignition Switch Position	ON	START
Starter Signal	OFF	ON

OK → **Go to step 12**

NG

ES

ES

2 INSPECT ECM (STSW VOLTAGE)

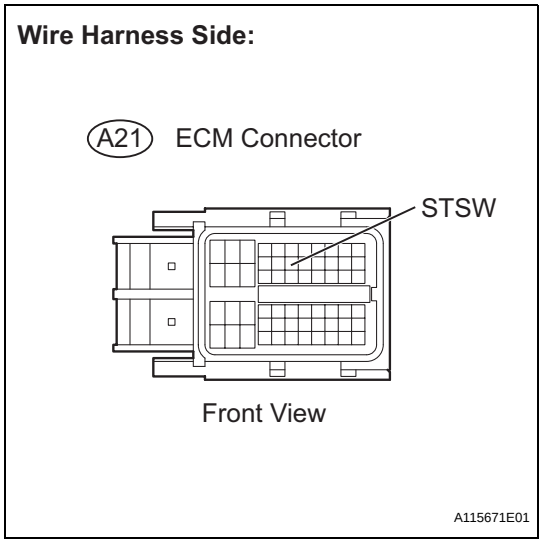

(a) Disconnect the A21 ECM connector.
(b) Measure the voltage between the terminals of the ECM connector and body ground while cranking the engine.
Standard voltage

Tester Connections	Specified Conditions
STSW (A21-14) - Body ground	11 to 14 V

Result

Result	Proceed To
Within standard range(A/T)	A
Within standard range (M/T)	B
Outside standard range	C

(c) Reconnect the ECM connector.

B → **Go to step 6**

C → **Go to step 9**

A

3 INSPECT ECM (STAR VOLTAGE)

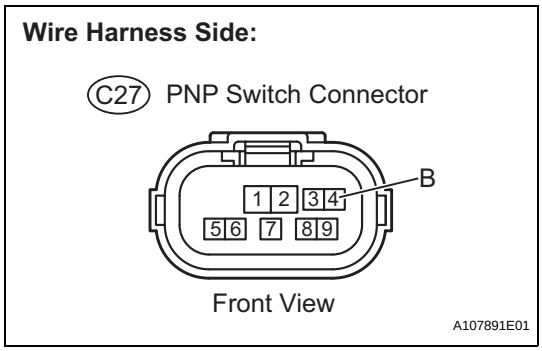

(a) Disconnect the C27 Park/Neutral Position (PNP) switch connector.
(b) Measure the voltage between the terminals of the PNP switch connector and body ground while cranking the engine.
Standard voltage

Tester Connections	Specified Conditions
B (C27-4) - Body ground	11 to 14 V

(c) Reconnect the PNP switch connector.

NG → **Go to step 10**

OK

4 INSPECT PARK/NEUTRAL POSITION SWITCH ASSEMBLY

Component Side:

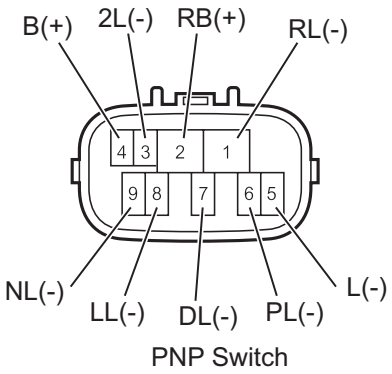

A107908E01

(a) Disconnect the C27 PNP switch connector.
(b) Check the resistance between each terminal shown below when the shift lever is moved to each range.

Standard resistance

Shift Position	Tester Connections	Specified Conditions
P	PL (6) - RB (2)	Below 1 Ω
	L (5) - B (4)	
R	RL (1) - RB (2)	
N	NL (9) - RB (2)	
	L (5) - B (4)	
D	DL (7) - RB (2)	
2	2L (3) - RB (2)	
L	LL (8) - RB (2)	

(c) Reconnect the PNP switch connector.

NG → **REPLACE PARK / NEUTRAL POSITION SWITCH**

OK

5 CHECK HARNESS AND CONNECTOR (PARK/NEUTRAL POSITION SWITCH - ECM)

Wire Harness Side:

C27 PNP Switch Connector

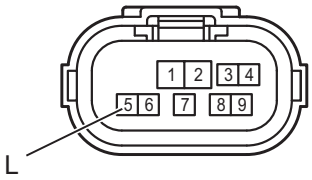

Front View

A21 ECM Connector

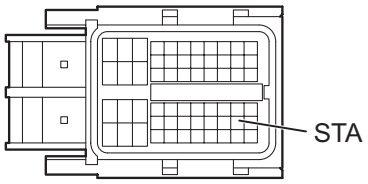

Front View

A115685E01

(a) Disconnect the C27 PNP switch connector.
(b) Disconnect the A21 ECM connector.
(c) Check the resistance.

Standard resistance (Check for open)

Tester Connections	Specified Conditions
L (C27-5) - STA (A21-48)	Below 1 Ω

Standard resistance (Check for short)

Tester Connections	Specified Conditions
L (C27-5) or STA (A21-48) - Body ground	10 kΩ or higher

(d) Reconnect the PNP switch connector.
(e) Reconnect the ECM connector.

NG → **REPAIR OR REPLACE HARNESS OR CONNECTOR**

ES

OK

REPLACE ECM

6 INSPECT ECM (STAR VOLTAGE)

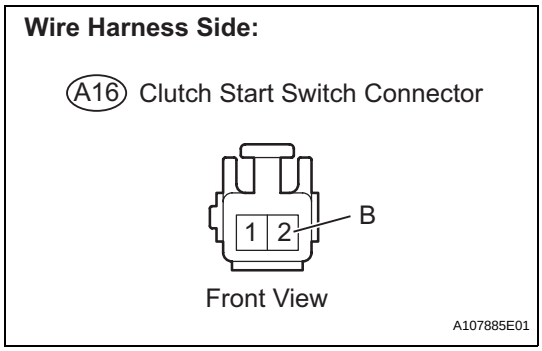

(a) Disconnect the A16 clutch start switch connector.
(b) Measure the voltage between the terminals of the clutch start switch connector and body ground while cranking the engine.
Standard voltage

Tester Connections	Specified Conditions
B (A16-2) - Body ground	11 to 14 V

(c) Reconnect the clutch start switch connector.

NG → **Go to step 11**

OK

7 INSPECT CLUTCH START SWITCH ASSEMBLY

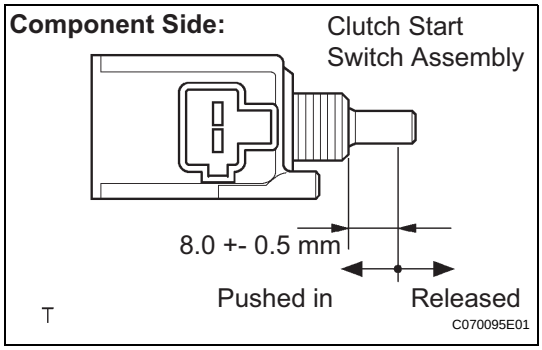

(a) Disconnect the A16 clutch start switch connector.
(b) Check the resistance between the terminals of the clutch start switch.
Standard resistance

Switch Positions	Specified Conditions
Pushed in	Below 1 Ω
Released	10 kΩ or higher

(c) Reconnect the clutch start switch connector.

NG → **REPLACE CLUTCH START SWITCH**

OK

8	CHECK HARNESS AND CONNECTOR (CLUTCH START SWITCH - ECM)

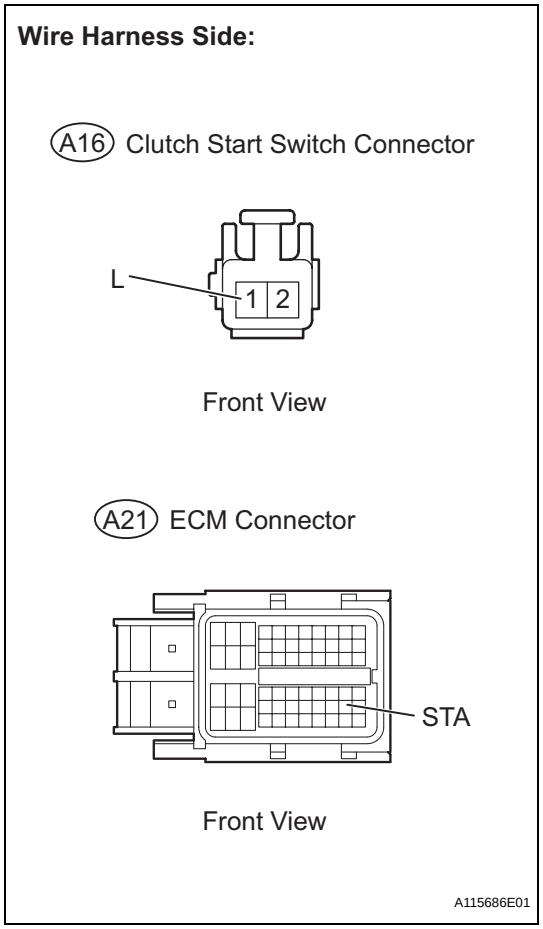

(a) Disconnect the A16 clutch start switch connector.
(b) Disconnect the A21 ECM connector.
(c) Check the resistance.

Standard resistance (Check for open)

Tester Connections	Specified Conditions
L (A16-1) - STA (A21-48)	Below 1 Ω

Standard resistance (Check for short)

Tester Connections	Specified Conditions
L (A16-1) or STA (A21-48) - Body ground	10 kΩ or higher

(d) Reconnect the clutch start switch connector.
(e) Reconnect the ECM connector.

NG → **REPAIR OR REPLACE HARNESS OR CONNECTOR**

OK

REPLACE ECM

ES

ES

9 INSPECT IGNITION SWITCH

Component Side:

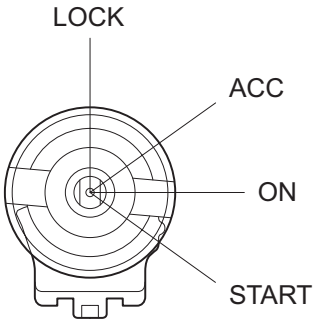

Ignition Switch

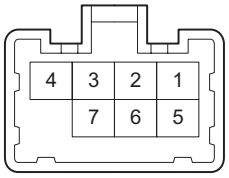

Front View

Y A107906E02

(a) Disconnect the D8 ignition switch connector.

(b) Check the resistance between the terminals shown below.

Standard resistance

Key Positions	Tester Connections	Specified Conditions
LOCK	-	10 kΩ or higher
ACC	2 - 4	Below 1 Ω
ON	1 - 2 - 4	
	5 - 6	
START	1 - 3 - 4	
	5 - 6 - 7	

(c) Reconnect the ignition switch connector.

NG → **REPLACE IGNITION SWITCH**

OK

REPAIR OR REPLACE HARNESS OR CONNECTOR (ECM - IGNITION SWITCH - BATTERY)

10	CHECK HARNESS AND CONNECTOR (IGNITION SWITCH - PARK/NEUTRAL POSITION SWITCH - ECM)

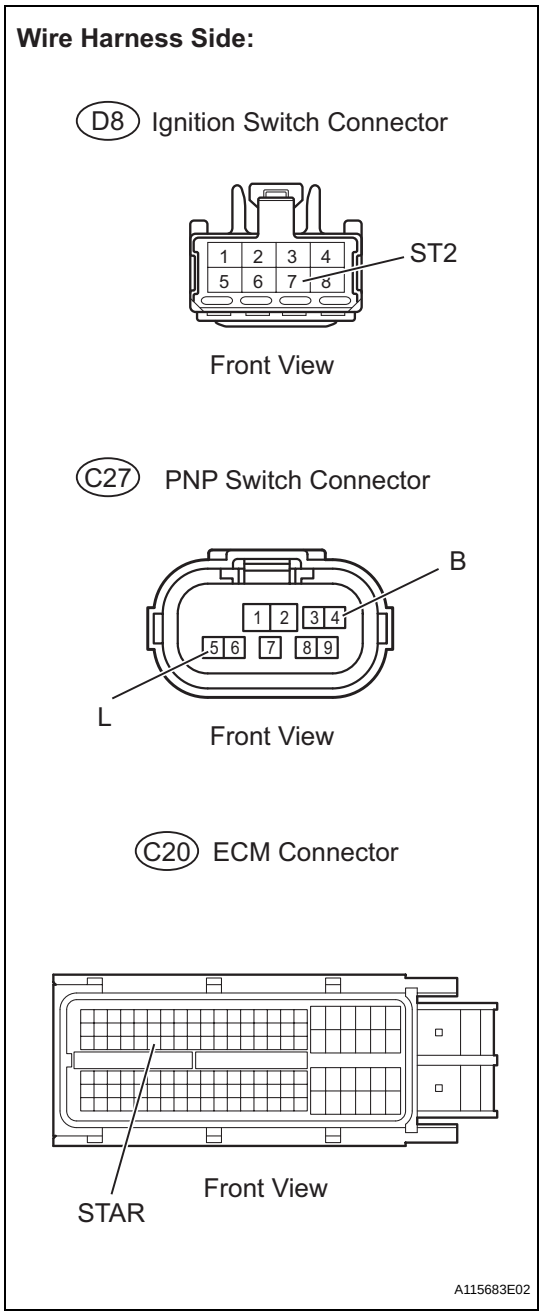

(a) Disconnect the D8 ignition switch connector.
(b) Disconnect the C27 PNP switch connector.
(c) Disconnect the C20 ECM connector.
(d) Check the resistance.

Standard resistance (Check for open)

Tester Connections	Specified Conditions
ST2 (D8-7) - B (C27-4)	Below 1 Ω
STAR (C20-52) - B (C27-4)	
STAR (C20-52) - L (C27-5)	

Standard resistance (Check for short)

Tester Connections	Specified Conditions
ST2 (D8-7) or B (C27-4) - Body ground	10 kΩ or higher
STAR (C20-52) or B (C27-4) - Body ground	
STAR (C20-52) or L (C27-5) - Body ground	

(e) Reconnect the ignition switch connector.
(f) Reconnect the PNP switch connector.
(g) Reconnect the ECM connector.

NG → **REPAIR OR REPLACE HARNESS OR CONNECTOR**

OK

REPLACE ECM

ES

ES

11	CHECK HARNESS AND CONNECTOR (IGNITION SWITCH - CLUTCH START SWITCH - ECM)

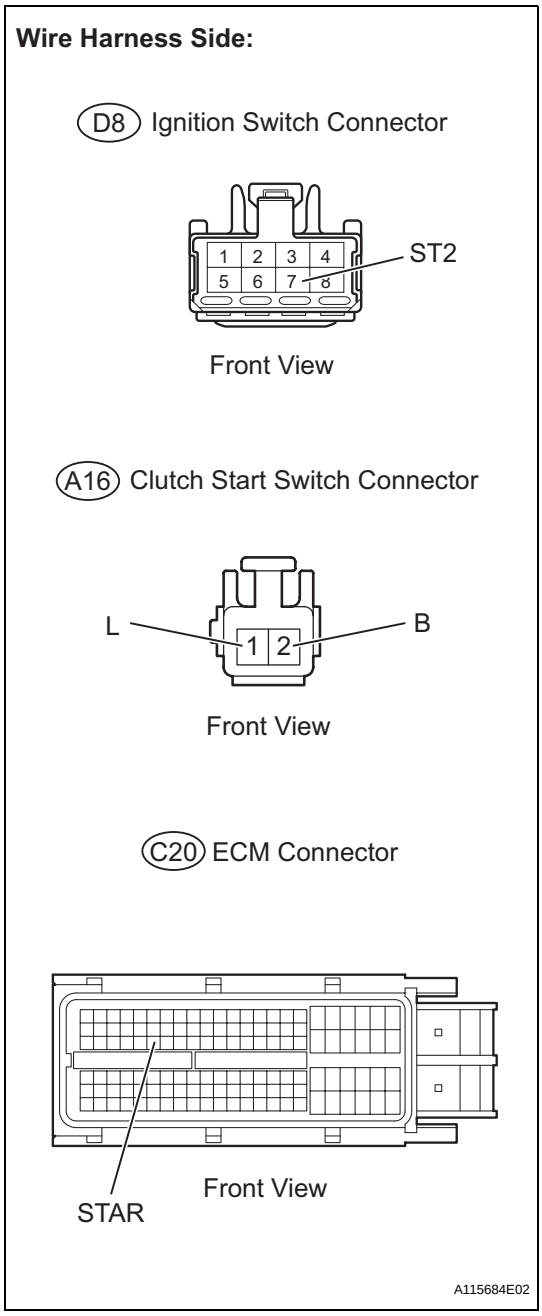

(a) Disconnect the D8 ignition switch connector.
(b) Disconnect the A16 clutch start switch connector.
(c) Disconnect the C20 ECM connector.
(d) Check the resistance.

Standard resistance (Check for open)

Tester Connections	Specified Conditions
ST2 (D8-7) - B (A16-2)	Below 1 Ω
STAR (C20-52) - B (A16-2)	
STAR (C20-52) - L (A16-1)	

Standard resistance (Check for short)

Tester Connections	Specified Conditions
ST2 (D8-7) or B (A16-2) - Body ground	10 kΩ or higher
STAR (C20-52) or B (A16-2) - Body ground	
STAR (C20-52) or L (A16-1) - Body ground	

(e) Reconnect the ignition switch connector.
(f) Reconnect the clutch start switch connector.
(g) Reconnect the ECM connector.

NG → **REPAIR OR REPLACE HARNESS OR CONNECTOR**

OK

REPLACE ECM

12	INSPECT BATTERY

(a) Check that the battery is not depleted.
OK:
Battery is not depleted.

NG → **REPLACE BATTERY**

OK

13	CHECK BATTERY TERMINAL

(a) Check that the battery terminals are not loose or corroded.
OK:
Battery terminals are not loose or corroded.

NG → **REPAIR OR REPLACE BATTERY TERMINAL**

OK

ES

14	CHECK HARNESS AND CONNECTOR (PNP SWITCH OR CLUTCH START SWITCH - ST RELAY)

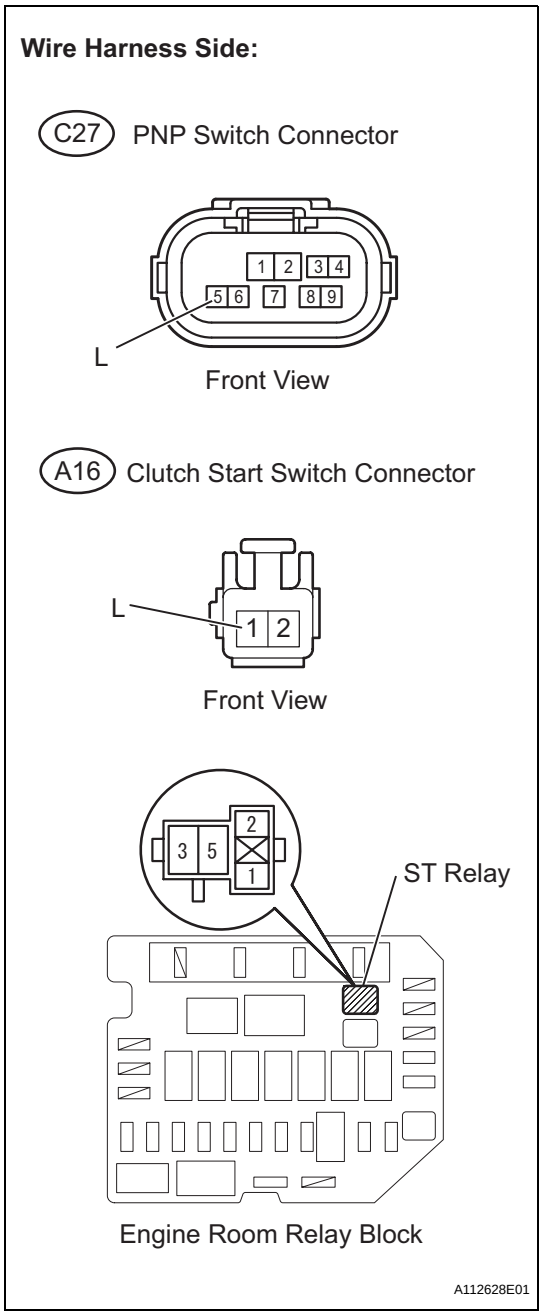

(a) Remove the ST relay from the engine room relay block.
(b) Disconnect the C27 PNP switch connector (A/T).
(c) Disconnect the A16 clutch start switch connector (M/T).
(d) Check the resistance.

Standard resistance (Check for open)

Tester Connections	Specified Conditions
L (C27-5) - ST relay (2)	Below 1 Ω
L (A16-1) - ST relay (2)	
ST relay (1) - Body ground	

Standard resistance (Check for short)

Tester Connections	Specified Conditions
L (C27-5) or ST relay (2) - Body ground	10 kΩ or higher
L (A16-1) or ST relay (2) - Body ground	

(e) Reinstall the ST relay.
(f) Reconnect the PNP switch connector (A/T).
(g) Reconnect the clutch start switch connector (M/T).

NG → **REPAIR OR REPLACE HARNESS OR CONNECTOR**

OK

CHECK AND REPLACE STARTER RELAY AND STARTER

MIL Circuit

DESCRIPTION

The MIL (Malfunction Indicator Lamp) is used to indicate vehicle malfunction detections by the ECM. When the ignition switch is turned to ON, power is supplied to the MIL circuit, and the ECM provides the circuit ground which illuminates the MIL.
The MIL operation can be checked visually: When the ignition switch is first turned to ON, the MIL should be illuminated and should then turn off. If the MIL remains illuminated or is not illuminated, conduct the following troubleshooting procedure using an intelligent tester.

WIRING DIAGRAM

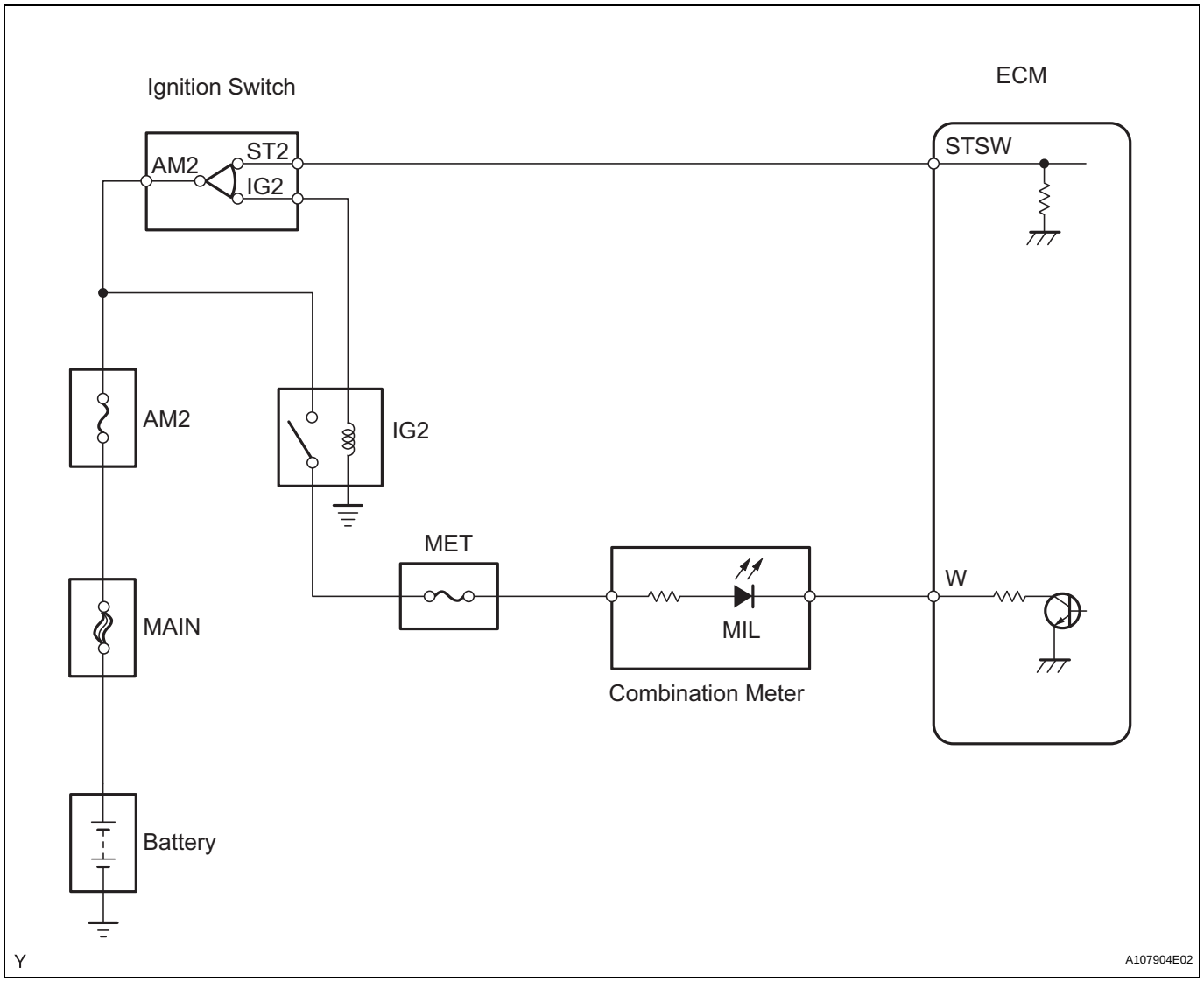

INSPECTION PROCEDURE

1 CHECK THAT MIL IS ILLUMINATED

(a) Perform troubleshooting in accordance with the table below.

Conditions	Proceed To
MIL remains ON	A
MIL does not illuminate	B

B → **Go to step 5**

ES

A

2 CHECK WHETHER MIL TURNS OFF

(a) Connect an intelligent tester to the DLC3.
(b) Turn the ignition switch to ON and turn the tester ON.
(c) Select the following menu items: DIAGNOSIS / ENHANCED OBD II / DTC INFO / CURRENT CODES.
(d) Check if any DTCs have been stored. Note down any DTCs.
(e) Clear DTCs (See page ES-34).
(f) Check if the MIL goes off.
Standard:
MIL should go off.

OK → **REPAIR CIRCUITS INDICATED BY OUTPUT DTCS**

NG

3 CHECK HARNESS AND CONNECTOR (CHECK FOR SHORT IN WIRE HARNESS)

Wire Harness Side:

A21 ECM Connector

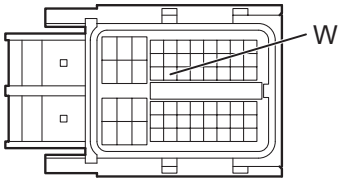

Front View

A115671E03

(a) Disconnect the A21 ECM connector.
(b) Turn the ignition switch to ON.
(c) Check that the MIL is not illuminated.
OK:
MIL is not illuminated.
(d) Reconnect the ECM connector.

OK → **REPLACE ECM**

NG

4 CHECK HARNESS AND CONNECTOR (COMBINATION METER - ECM)

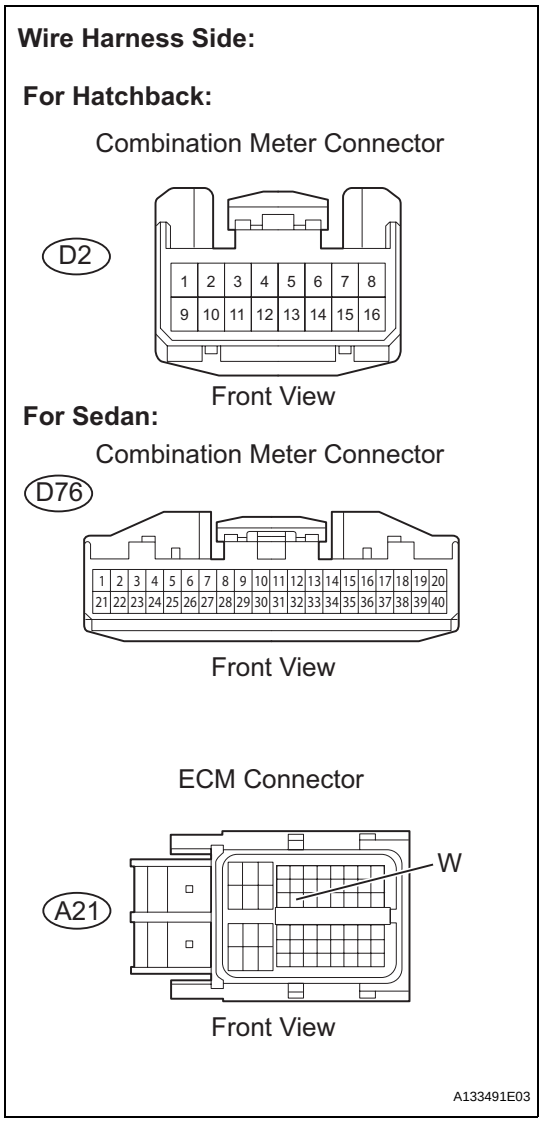

(a) Disconnect the A21 ECM connector.
(b) Disconnect the D2 combination meter connector (for Hatchback).
(c) Disconnect the D76 combination meter connector (for Sedan).
(d) Check the resistance.
Standard resistance (Check for short)

Tester Connections	Specified Conditions
W (A21-24) or combination meter (D2-4) - Body ground	10 kΩ or higher
W (A21-24) or combination meter (D76-4) - Body ground	

(e) Reconnect the ECM connector.
(f) Reconnect the combination meter connector.

OK → **REPAIR OR REPLACE COMBINATION METER ASSEMBLY**

ES

NG

REPAIR OR REPLACE HARNESS OR CONNECTOR

5 CHECK THAT MIL IS ILLUMINATED

(a) Check if the MIL is illuminated when the ignition switch is turned to ON.
OK:
MIL should be illuminated.

OK → **SYSTEM OK**

NG

6	CHECK THAT ENGINE STARTS

(a) Turn the ignition switch to ON.
(b) Start the engine.

Result	Proceed To
Engine starts	A
Engine does not start*	B

HINT:
*: The intelligent tester cannot communicate with the ECM.

B → **GO TO VC OUTPUT CIRCUIT**

A

7	INSPECT COMBINATION METER ASSEMBLY (MIL CIRCUIT)

- Check the MIL circuit for Hatchback (See page ME-76).
- Check the MIL circuit for Sedan (See page ME-12).

NG → **REPAIR OR REPLACE COMBINATION METER ASSEMBLY**

OK

CHECK AND REPLACE HARNESS OR CONNECTOR (COMBINATION METER - ECM)

MASS AIR FLOW METER

COMPONENTS

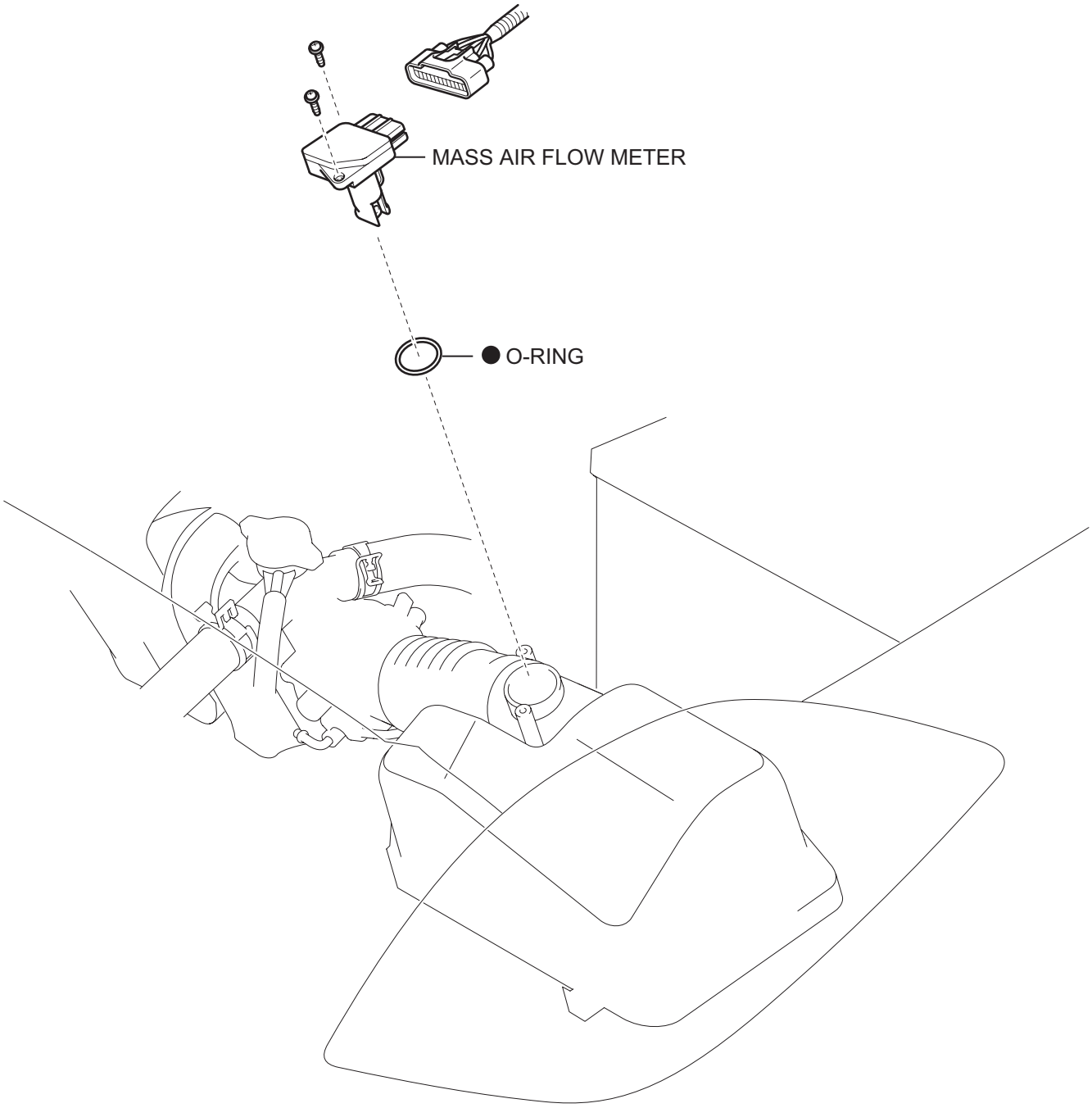

● Non-reusable part

T

A115142E01

ON-VEHICLE INSPECTION

NOTICE:

- **Perform the mass air flow meter inspection according to the procedures below.**
- **Only replace the mass air flow meter when both the LONG FT#1 value and MAF value in the DATA LIST (with the engine stopped) are not within the normal operating range.**

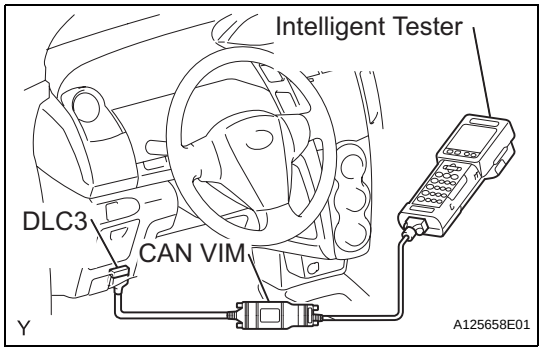

1. INSPECT MASS AIR FLOW METER

(a) Perform confirmation driving pattern.

(1) Connect the intelligent tester to the DLC3.

(2) Turn the ignition switch to ON.

(3) Turn the tester ON.

(4) Clear the DTCs (see pageES-34).

(5) Start the engine and warm it up with all the accessory switches OFF (until the engine coolant temperature is 75°C (167°F) or more).

(6) Drive the vehicle at 50 km/h (31 mph) or more for 3 to 5 minutes *1.

(7) Allow the engine to idle for 2 minutes *2.

(8) Perform steps *1 and *2 at least 3 times.

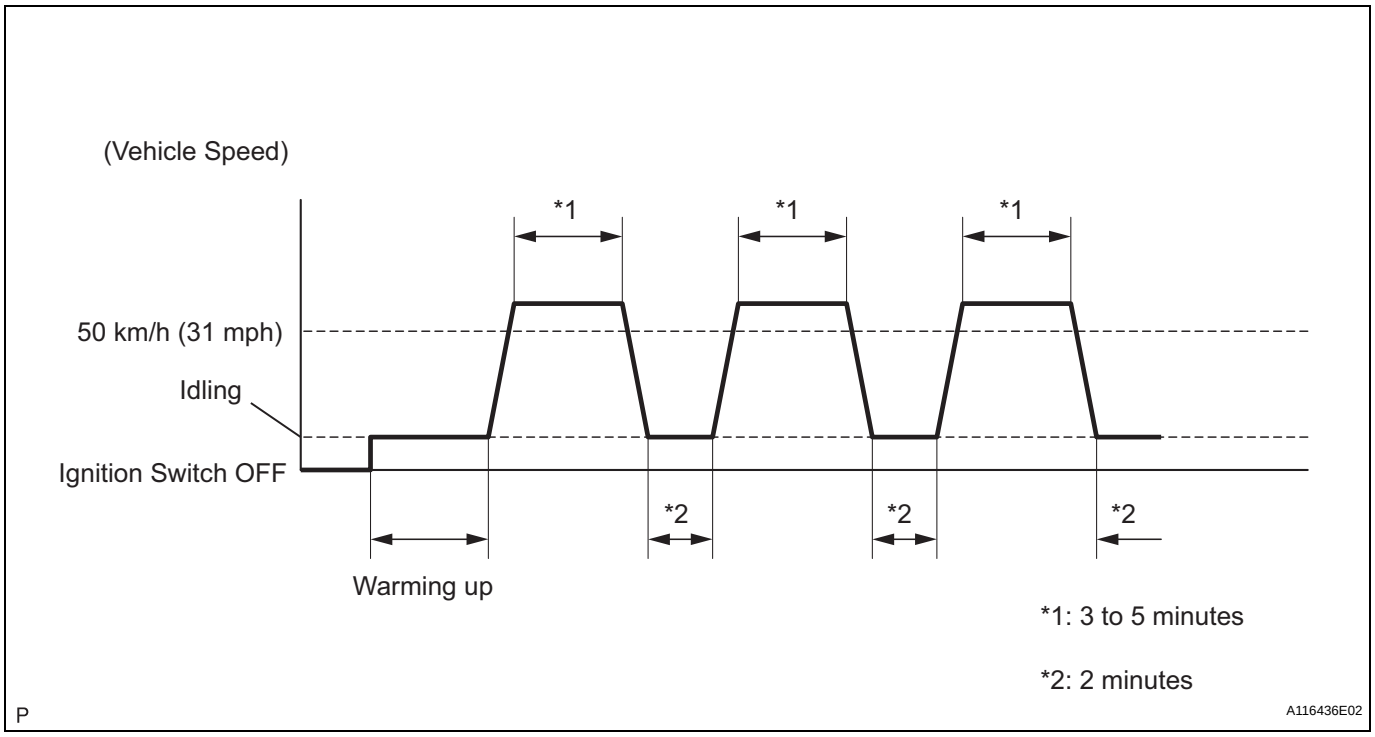

(b) Read the value using the intelligent tester (LONG FT#1).

(1) Select the following menu items: DIAGNOSIS / ENHANCED OBD II / DATA LIST / PRIMARY / LONG FT #1.

(2) Read the values displayed on the tester.

Standard value:

Within -15 to +15 %

If the result is not within the specified range, perform the inspection below.

ES

(c) Read the value using the intelligent tester (MAF).

NOTICE:

- **Turn off the engine.**
- **Perform the inspection with the vehicle indoors and on a level surface.**
- **Perform the inspection of the mass air flow meter while it is installed into the air cleaner case (installed on the vehicle).**
- **During the test, do not use the exhaust air duct to perform suction on the exhaust pipe.**

(1) Turn the ignition switch to ACC.

(2) Turn the ignition switch ON (do not run the engine).

(3) Turn the tester ON.

(4) Select the following menu items: DIAGNOSIS / ENHANCED OBD II / DATA LIST / PRIMARY / MAF.

(5) Wait 30 seconds, and read the values on the intelligent tester.

Standard condition:

Less than 0.28g/sec

- If the result is not as specified, replace the mass air flow meter.
- If the result is within the specified range, investigate the cause of the extremely rich or lean air fuel ratio (see page ES-136).

REMOVAL

1. DISCONNECT CABLE FROM NEGATIVE BATTERY TERMINAL

2. REMOVE MASS AIR FLOW METER

(a) Disconnect the wire harness clamp and mass air flow meter connector.

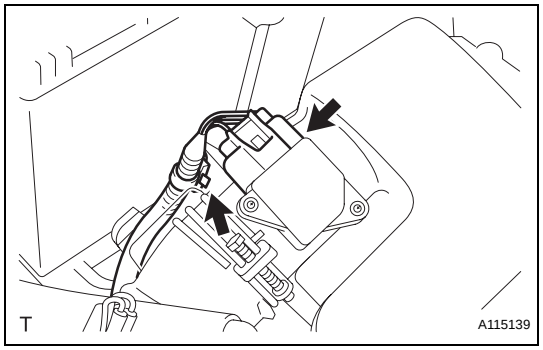

(b) Remove the 2 screws and the mass air flow meter.

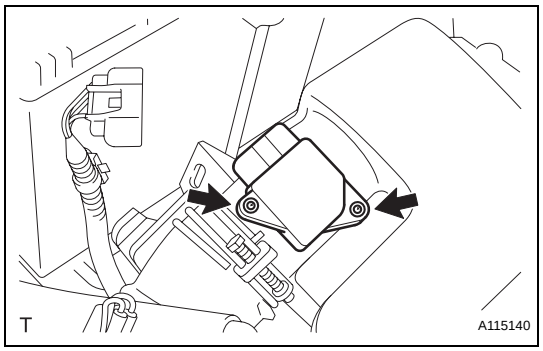

(c) Remove the O-ring from the mass air flow meter.

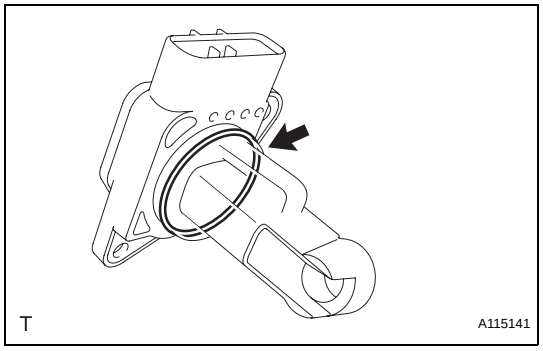

INSTALLATION

1. INSTALL MASS AIR FLOW METER

(a) Install a new O-ring onto the mass air flow meter.

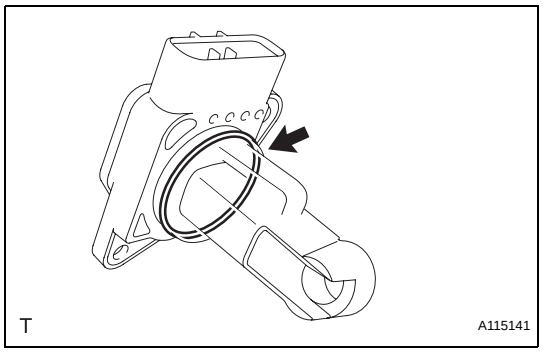

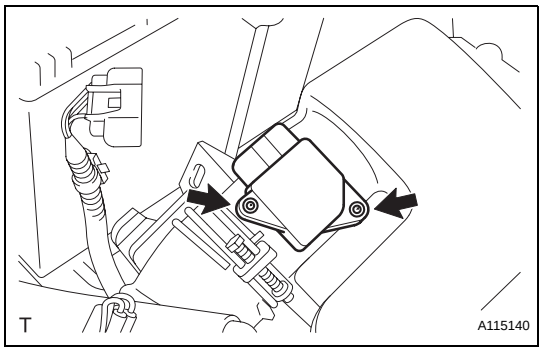

(b) Install the mass air flow meter with the 2 screws.

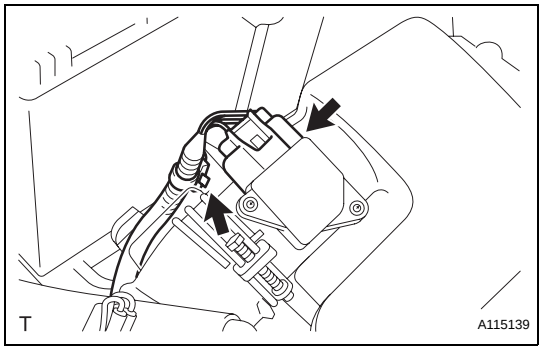

(c) Connect the wire harness clamp and mass air flow meter connector.

2. CONNECT CABLE TO NEGATIVE BATTERY TERMINAL
Torque: 5.4 N*m (55 kgf*cm, 48 in.*lbf)

CAMSHAFT TIMING OIL CONTROL VALVE ASSEMBLY

COMPONENTS

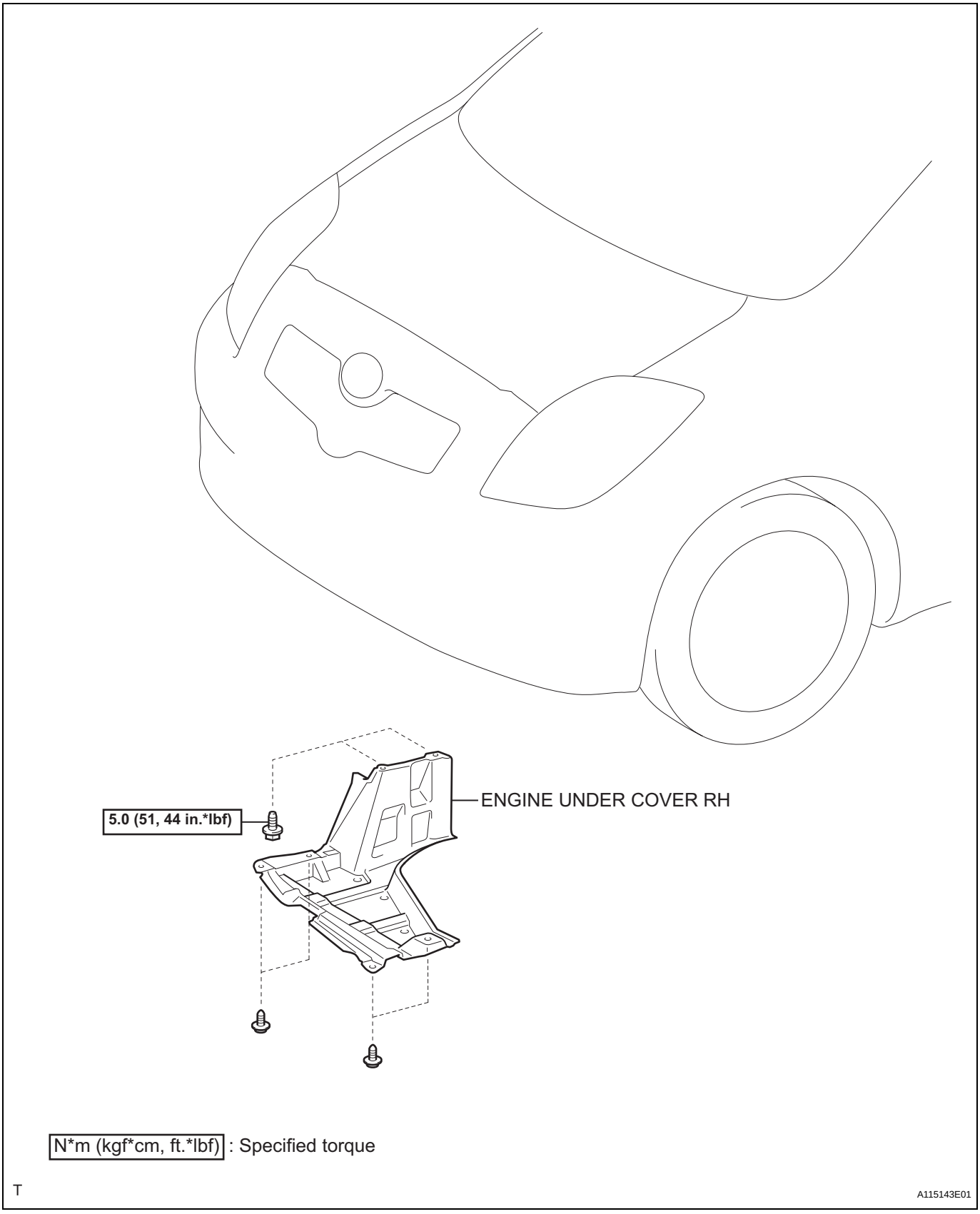

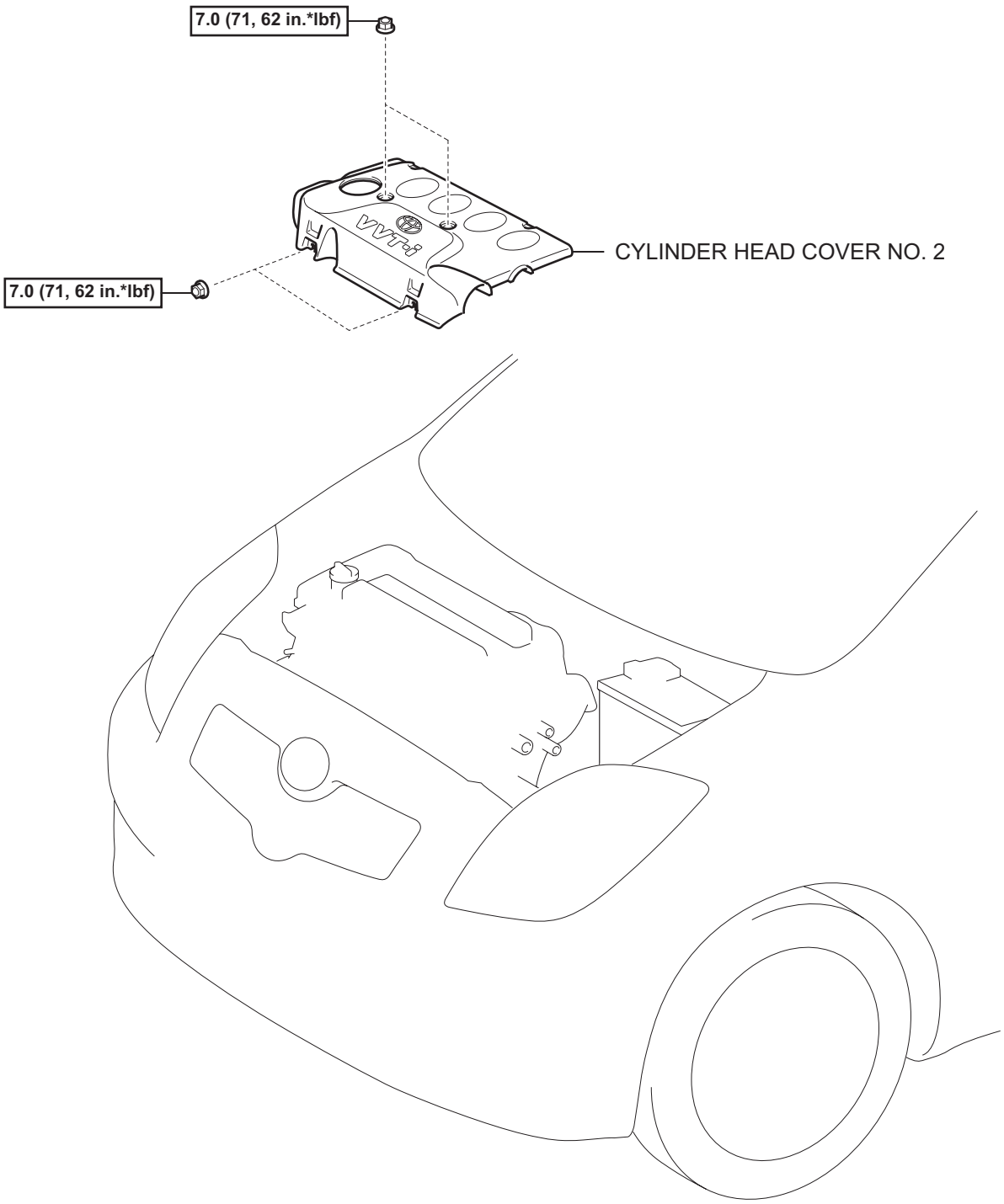

N*m (kgf*cm, ft.*lbf) : Specified torque

T

A115136E01

ES

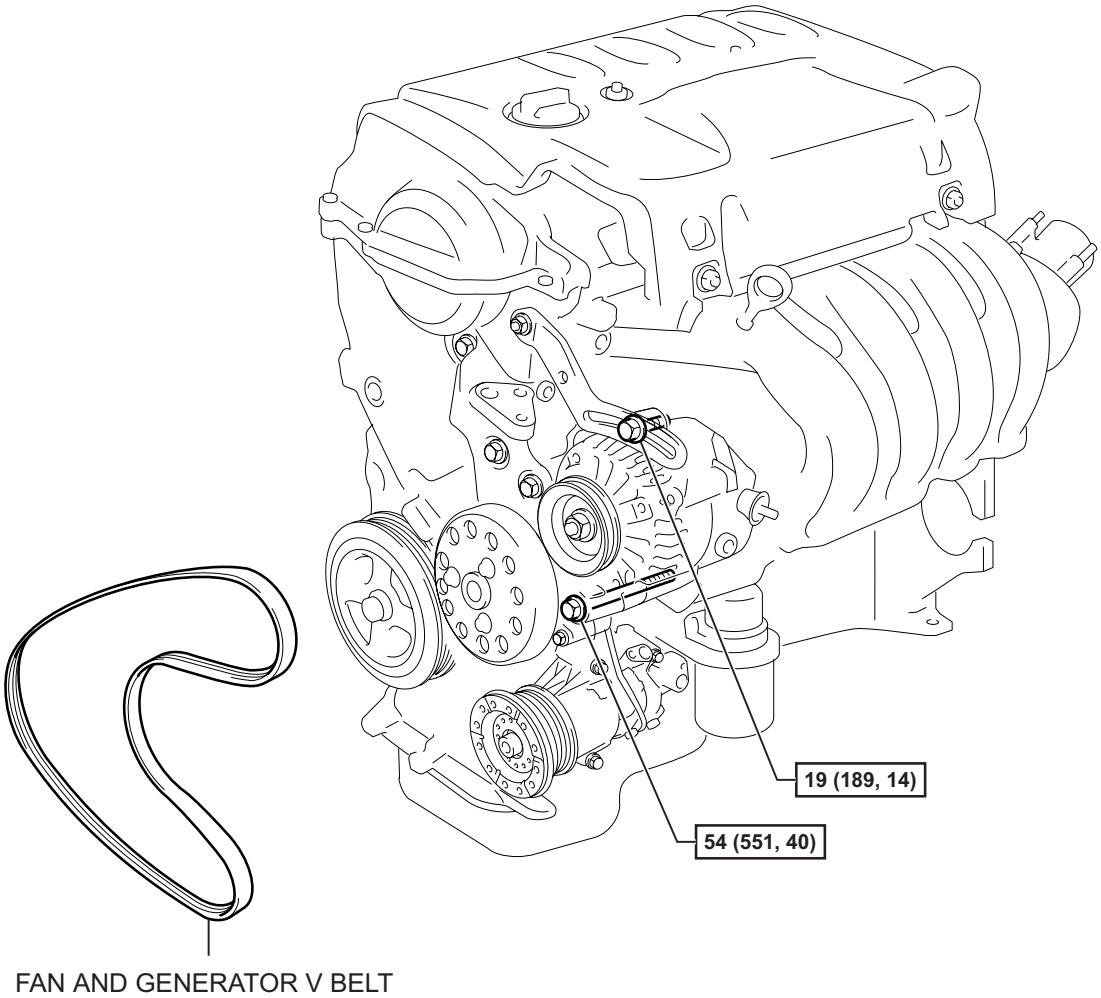

N*m (kgf*cm, ft.*lbf) : Specified torque

T

A116199E01

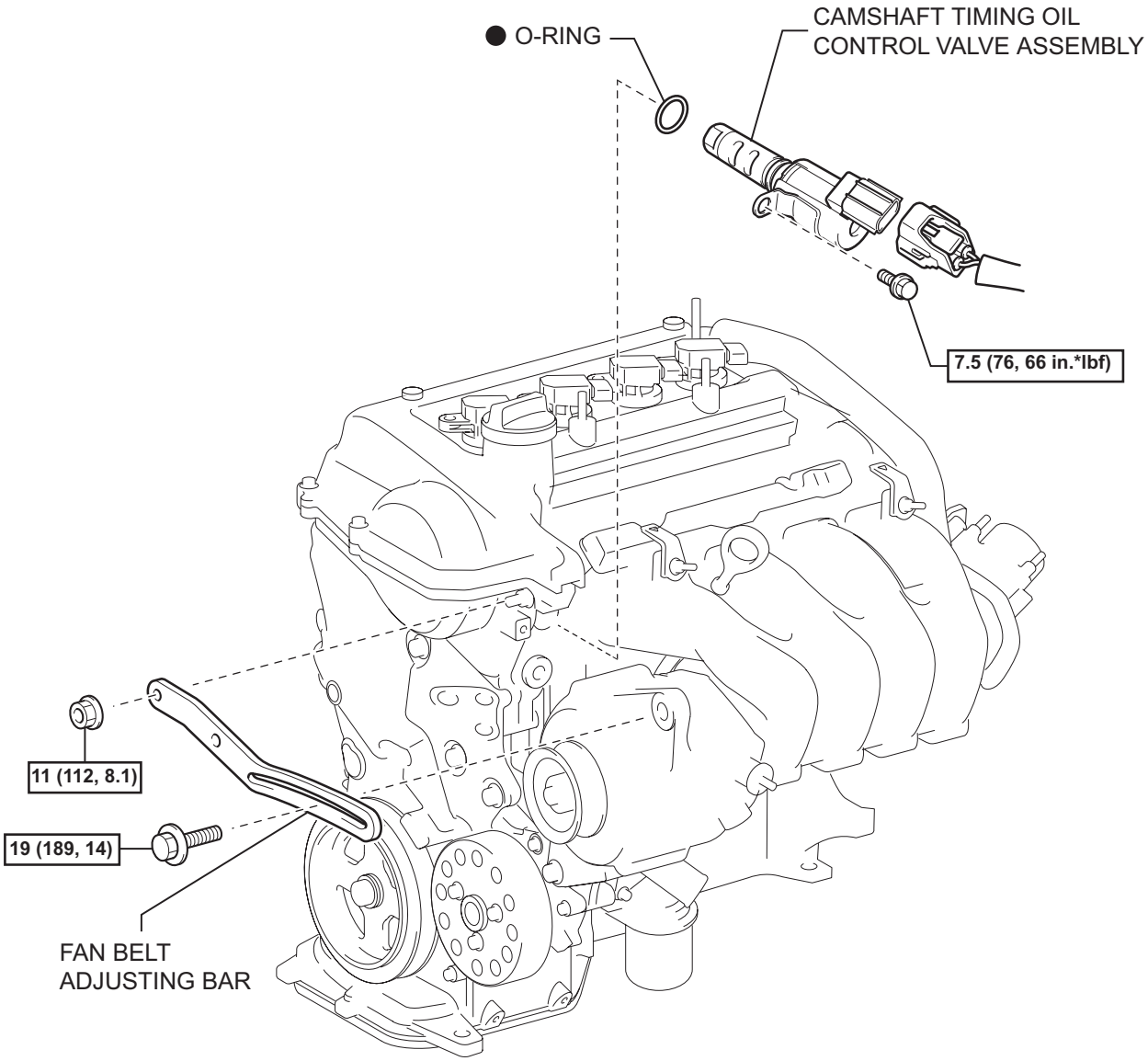

N*m (kgf*cm, ft.*lbf) : Specified torque

● Non-reusable part

T

A116180E01

ES

REMOVAL

1. **DISCONNECT CABLE FROM NEGATIVE BATTERY TERMINAL**
2. **REMOVE ENGINE UNDER COVER RH**
3. **REMOVE CYLINDER HEAD COVER NO. 2 (See page IG-9)**
4. **REMOVE FAN AND GENERATOR V BELT (See page EM-7)**
5. **REMOVE FAN BELT ADJUSTING BAR**
   (a) Remove the bolt and nut and remove the fan belt adjusting bar.

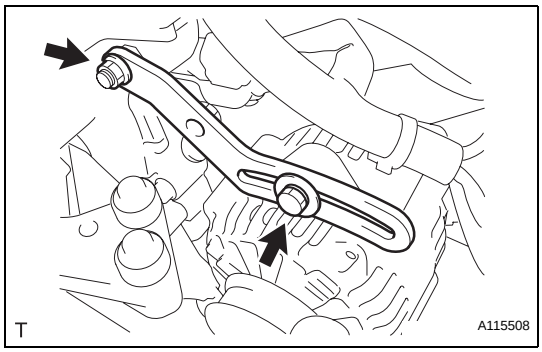

6. **REMOVE CAMSHAFT TIMING OIL CONTROL VALVE ASSEMBLY**
   (a) Disconnect the camshaft timing oil control valve assembly connector.

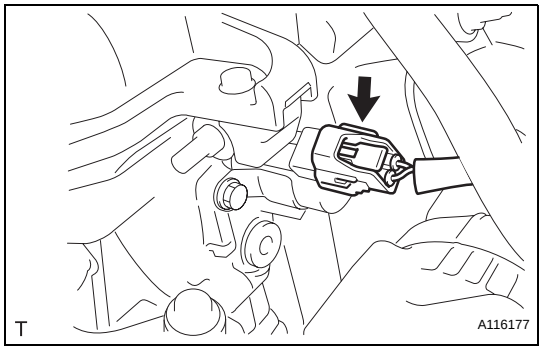

   (b) Remove the bolt and nut and remove the camshaft timing oil control valve assembly.

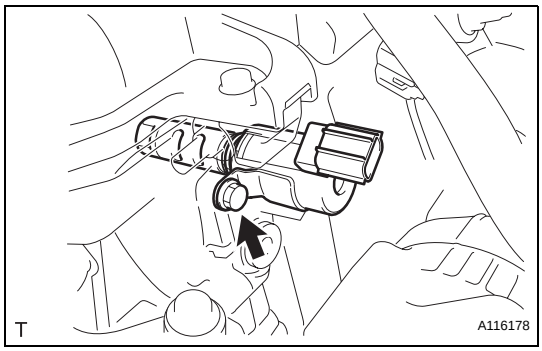

   (c) Remove the O-ring from the camshaft timing oil control valve assembly.

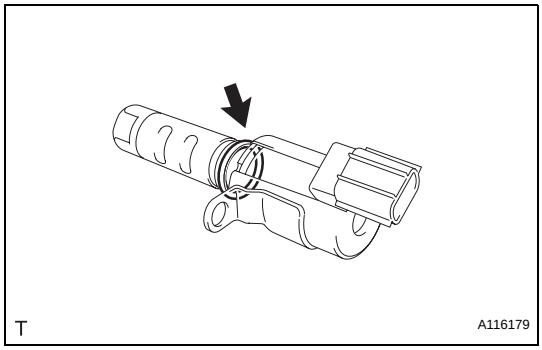

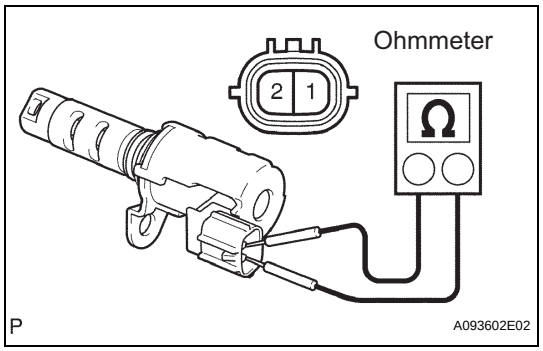

INSPECTION

1. INSPECT CAMSHAFT TIMING OIL CONTROL VALVE ASSEMBLY

(a) Check the resistance.

(1) Measure the resistance between the terminals.

Standard resistance:

6.9 to 7.9 Ω at 20 °C (68°F)

If the result is not as specified, replace the oil control valve assembly.

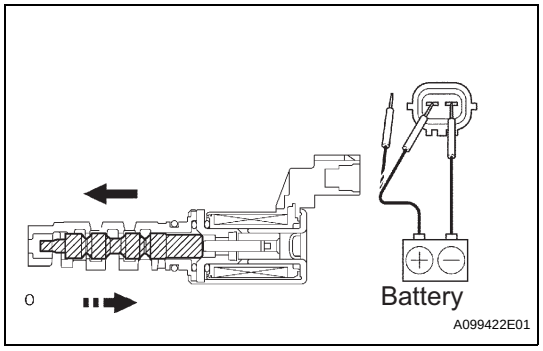

(b) Check the operation.

(1) Connect the positive (+) battery lead to terminal 1 and the negative (-) lead to terminal 2, and check the movement of the valve.

Standard

Condition	Specified Condition
Battery positive (+) voltage applied	Valve moves to the left as shown in the illustration
Battery positive (+) voltage cut off	Valve moves to the right as shown in the illustration

If the result is not as specified, replace the oil control valve.

NOTICE:

If the valve does not return properly because of foreign matter intrusion, a small amount of leakage in the advanced direction may occur and a DTC may be output.

INSTALLATION

1. INSTALL CAMSHAFT TIMING OIL CONTROL VALVE ASSEMBLY

(a) Apply a light coat of engine oil to a new O-ring and install it onto the camshaft timing oil control valve assembly.

NOTICE:

Do not twist the O-ring.

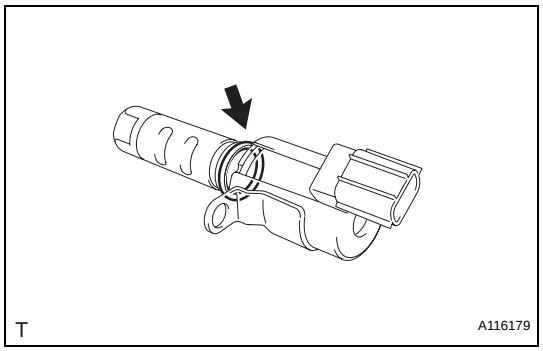

(b) Install the camshaft timing oil control valve assembly with the bolt.

Torque: 7.5 N*m (76 kgf*cm, 66 in.*lbf)

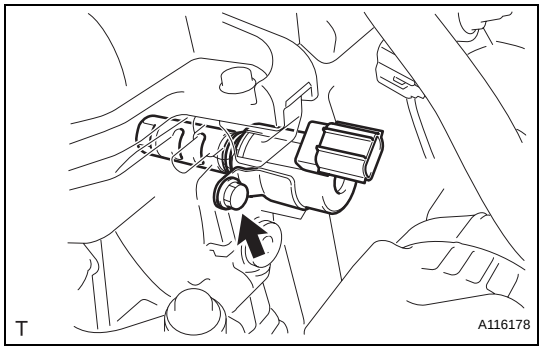

ES

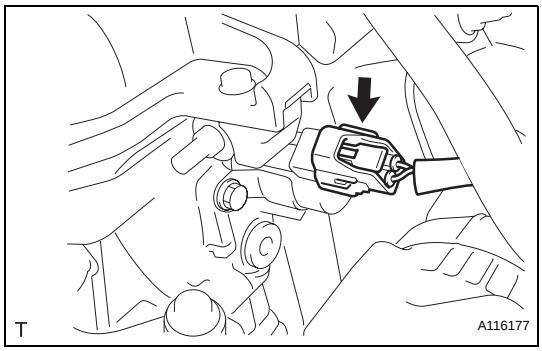

(c) Connect the camshaft timing oil control valve assembly connector.

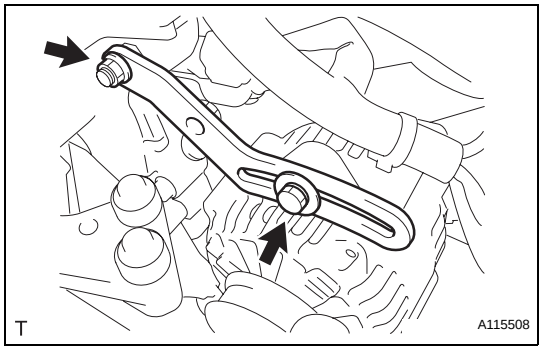

2. INSTALL FAN BELT ADJUSTING BAR

(a) Provisionally install the fan belt adjusting bar with the bolt and nut.

(b) Tighten the nut to the specified torque.
Torque: 11 N*m (112 kgf*cm, 8.1 ft.*lbf)

3. INSTALL FAN AND GENERATOR V BELT (See page EM-7)

4. ADJUST FAN AND GENERATOR V BELT (See page EM-7)

5. INSPECT FAN AND GENERATOR V BELT (See page EM-8)

6. CONNECT CABLE TO NEGATIVE BATTERY TERMINAL
Torque: 5.4 N*m (55 kgf*cm, 48 in.*lbf)

7. CHECK FOR ENGINE OIL LEAKAGE

8. INSTALL CYLINDER HEAD COVER NO. 2 (See page IG-10)

9. INSTALL ENGINE UNDER COVER RH

CAMSHAFT POSITION SENSOR

COMPONENTS

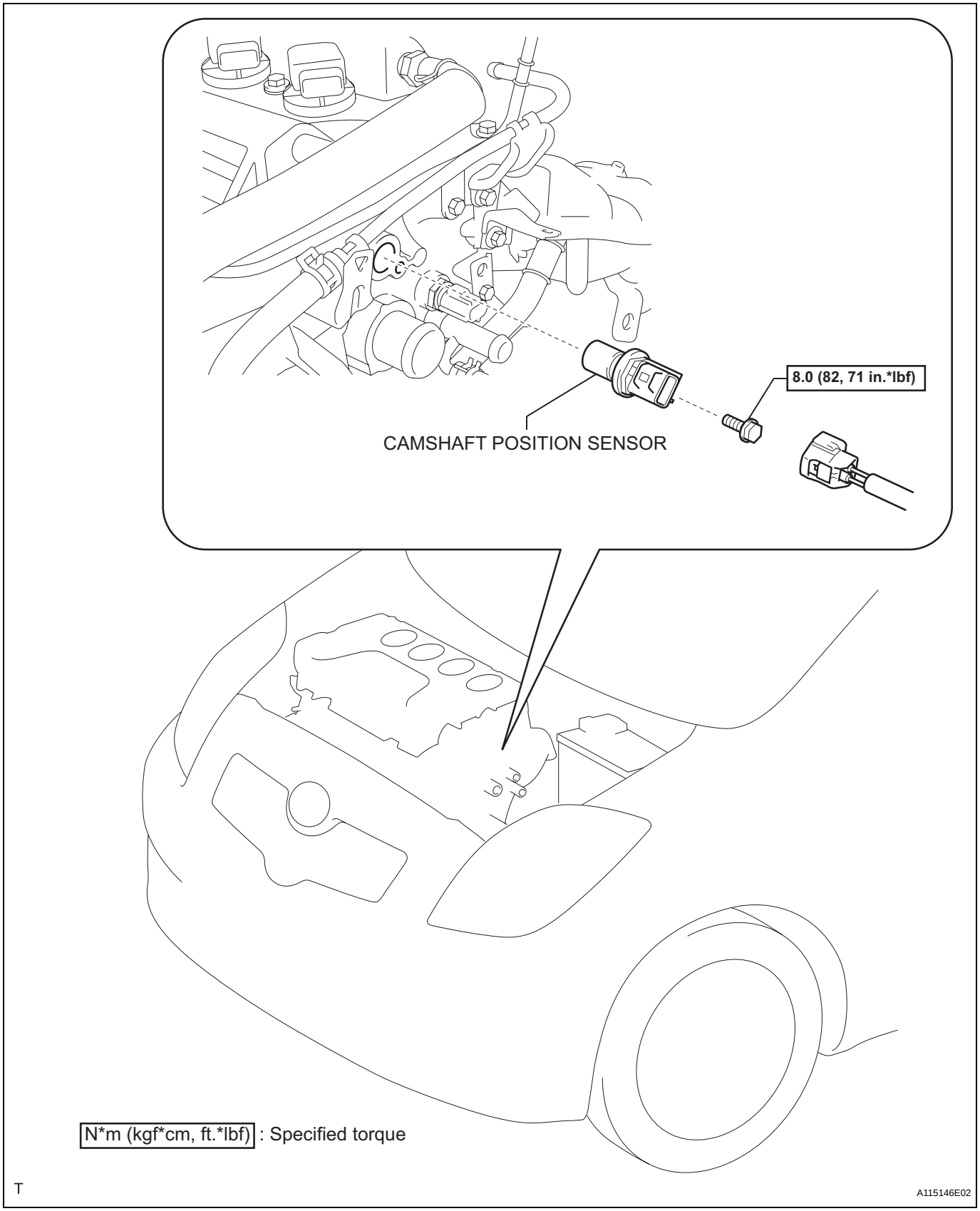

REMOVAL

1. DISCONNECT CABLE FROM NEGATIVE BATTERY TERMINAL

2. REMOVE CAMSHAFT POSITION SENSOR

(a) Disconnect the camshaft position sensor connector.

(b) Remove the bolt and remove the camshaft position sensor.

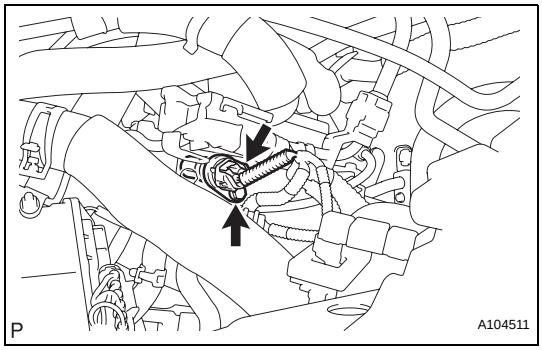

INSPECTION

1. INSPECT CAMSHAFT POSITION SENSOR

(a) Check the resistance.

(1) Using an ohmmeter, measure the resistance between the terminals.

Standard resistance

Temperature	Specified Condition
Cold	**1,630 to 2,740 Ω**
Hot	**2,065 to 3,225 Ω**

HINT:
In the table above, the terms Cold and Hot refer to the temperature of the coils. Cold means approximately -10 to 50 °C (14 to 122 °F). Hot means approximately 50 to 100 °C (122 to 212 °F).
If the resistance is not as specified, replace the camshaft position sensor.

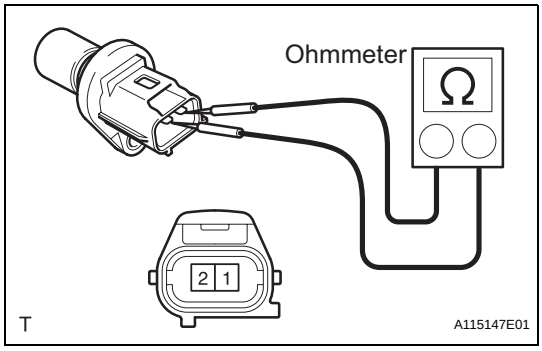

INSTALLATION

1. INSTALL CAMSHAFT POSITION SENSOR

(a) Apply a light coat of engine oil to the O-ring on the camshaft position sensor.

(b) Install the camshaft position sensor with the bolt.
Torque: 8.0 N*m (82 kgf*cm, 71 in.*lbf)
NOTICE:
Do not twist the O-ring.

(c) Connect the camshaft position sensor connector.

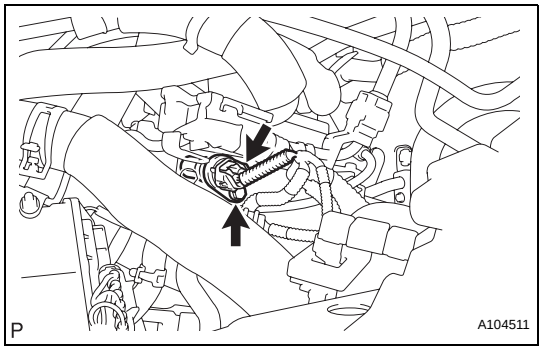

2. CONNECT CABLE TO NEGATIVE BATTERY TERMINAL
Torque: 5.4 N*m (55 kgf*cm, 48 in.*lbf)

3. CHECK FOR ENGINE OIL LEAKAGE

CRANKSHAFT POSITION SENSOR

COMPONENTS

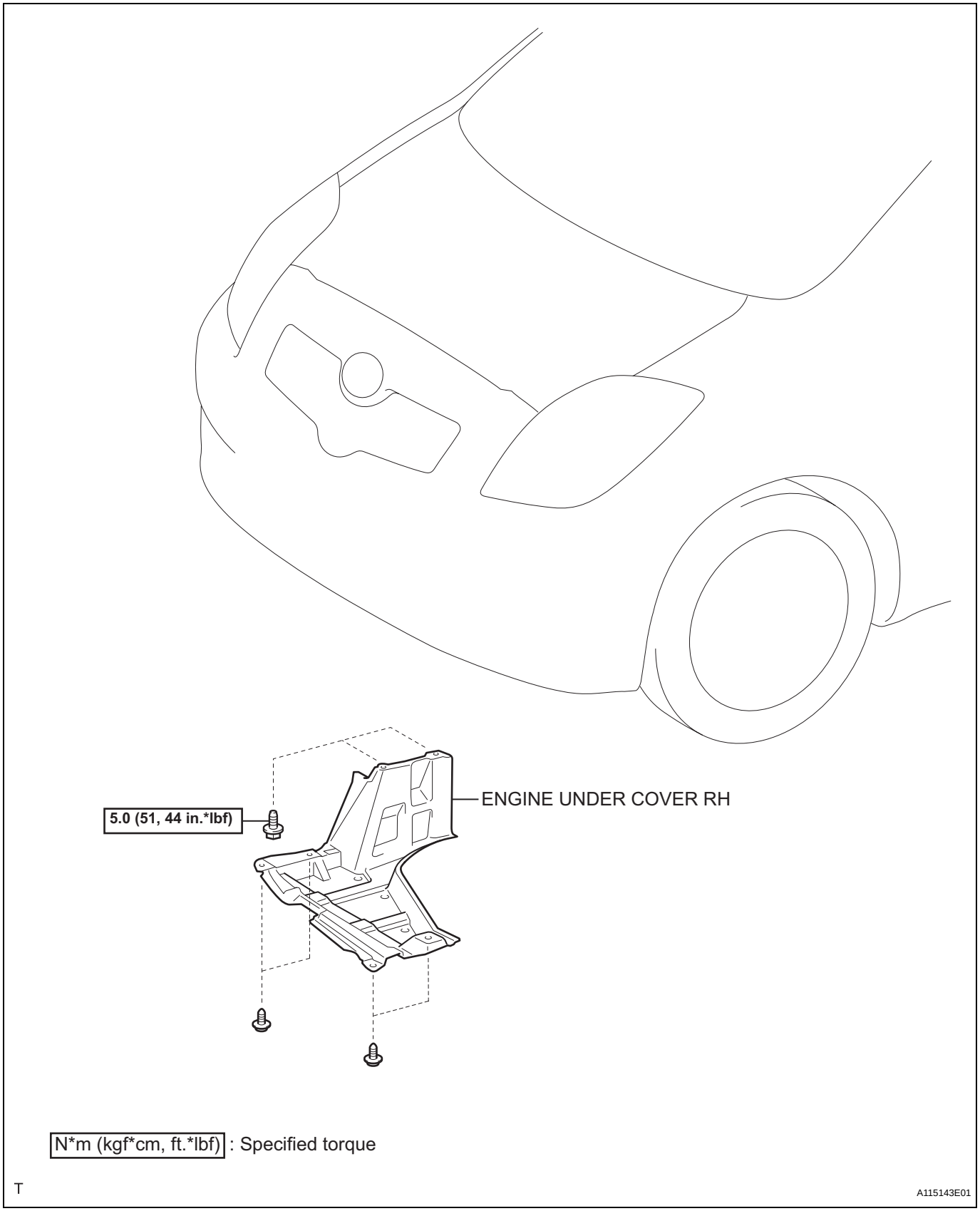

ES

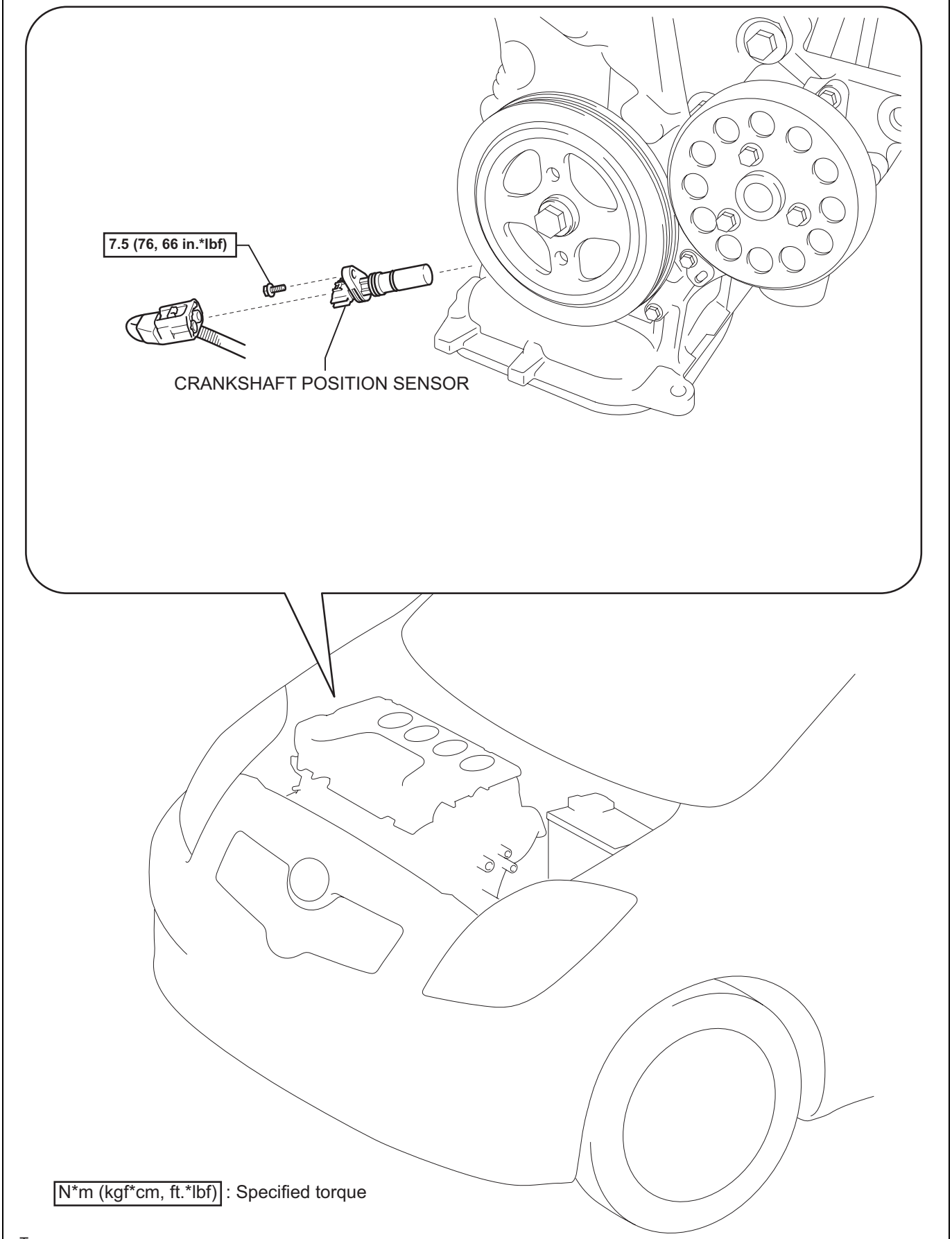

T

A115144E01

REMOVAL

1. **DISCONNECT CABLE FROM NEGATIVE BATTERY TERMINAL**
2. **REMOVE ENGINE UNDER COVER RH**
3. **REMOVE CRANKSHAFT POSITION SENSOR**
   (a) Disconnect the crankshaft position sensor connector.
   (b) Remove the bolt and remove the crankshaft position sensor.

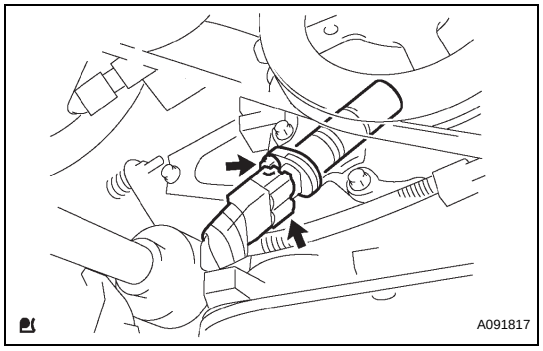

INSPECTION

1. **INSPECT CRANKSHAFT POSITION SENSOR**
   (a) Check the resistance.
      (1) Using an ohmmeter, measure the resistance between the terminals.
      Standard resistance

Temperature	Specified Condition
Cold	985 to 1,600 Ω
Hot	1,265 to 1,890 Ω

HINT:
In the table above, the terms Cold and Hot refer to the temperature of the coils. Cold means approximately -10 to 50 °C (14 to 122 °F). Hot means approximately 50 to 100 °C (122 to 212 °F).
If the resistance is not as specified, replace the crankshaft position sensor.

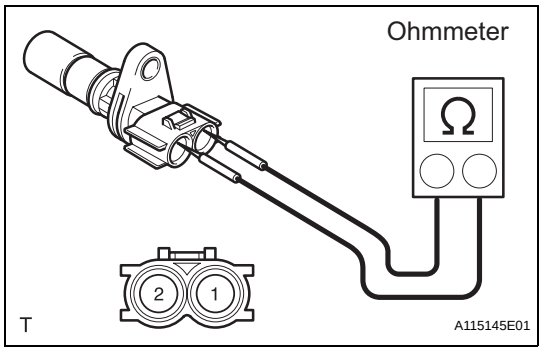

INSTALLATION

1. **INSTALL CRANKSHAFT POSITION SENSOR**
   (a) Apply a light coat of engine oil to the O-ring on the crankshaft position sensor.
   (b) Install the crankshaft position sensor with the bolt.
   Torque: 7.5 N*m (76 kgf*cm, 66 in.*lbf)
   NOTICE:
   Do not twist the O-ring.
   (c) Connect the crankshaft position sensor connector.
2. **CONNECT CABLE TO NEGATIVE BATTERY TERMINAL**
   Torque: 5.4 N*m (55 kgf*cm, 48 in.*lbf)
3. **CHECK FOR ENGINE OIL LEAKAGE**
4. **INSTALL ENGINE UNDER COVER RH**

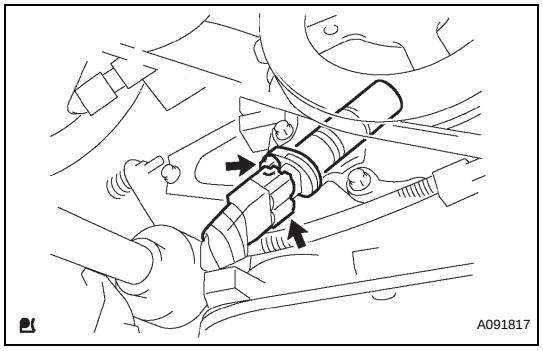

ENGINE COOLANT TEMPERATURE SENSOR

COMPONENTS

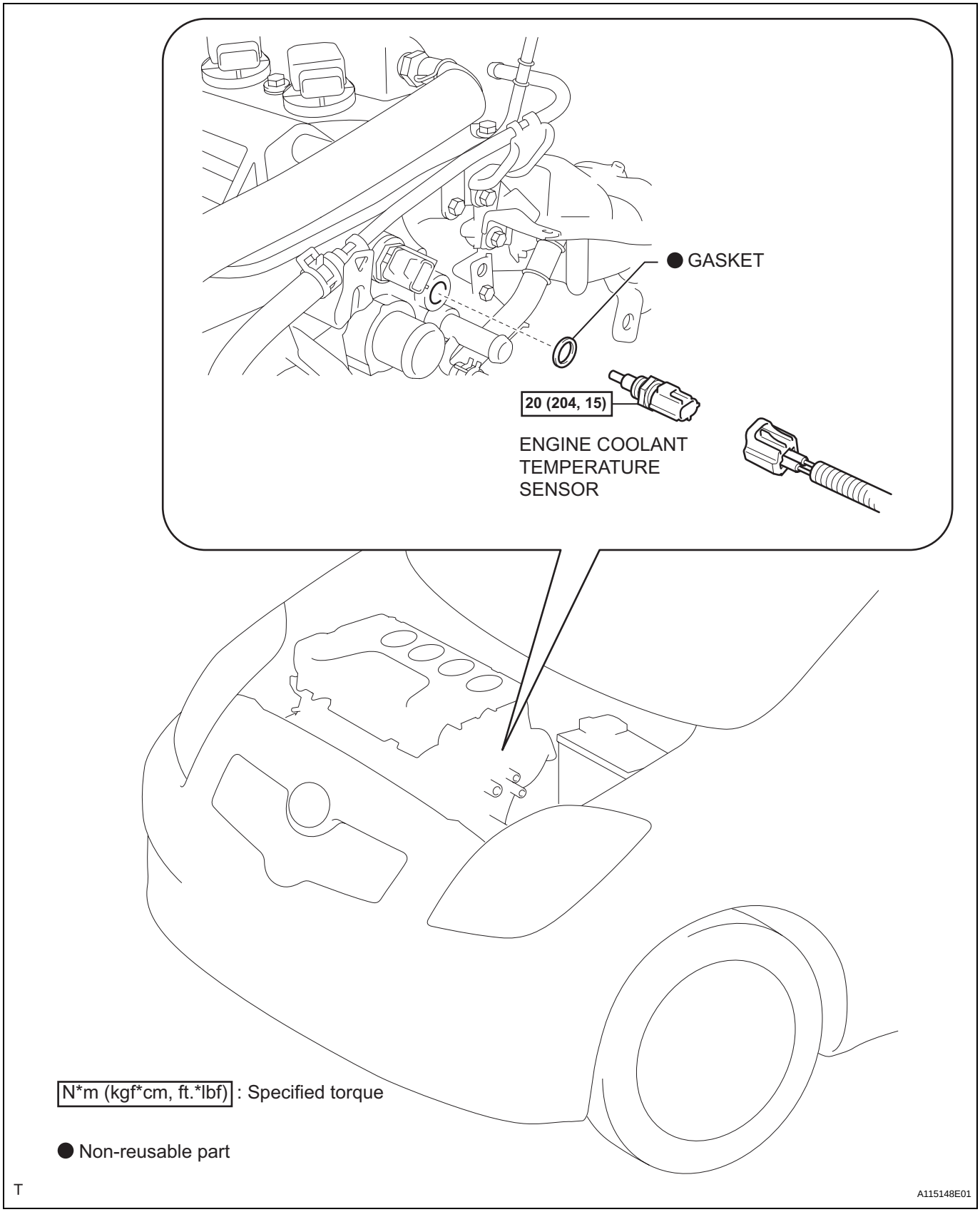

ES

REMOVAL

1. **DISCONNECT CABLE FROM NEGATIVE BATTERY TERMINAL**
2. **DRAIN ENGINE COOLANT (See page CO-8)**
3. **REMOVE ENGINE COOLANT TEMPERATURE SENSOR**
   (a) Disconnect the engine coolant temperature sensor connector.

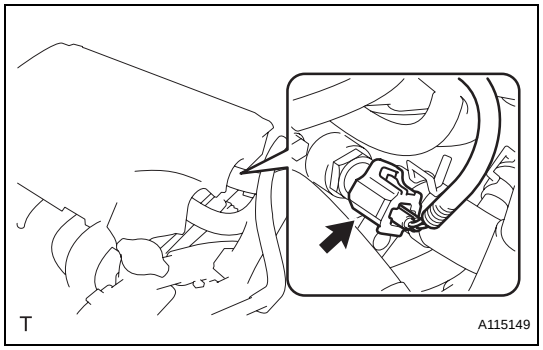

   (b) Using SST, remove the engine coolant temperature sensor.
   SST 09817-33190

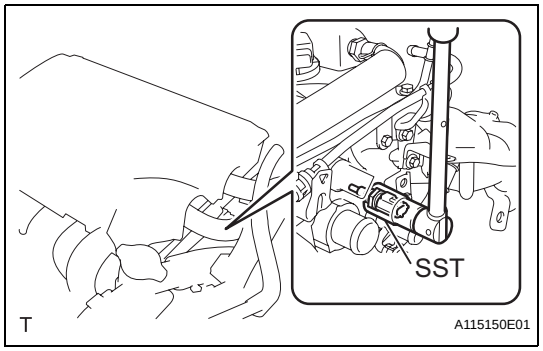

INSPECTION

1. **INSPECT ENGINE COOLANT TEMPERATURE SENSOR**
   (a) Check the resistance.
      (1) Using an ohmmeter, measure the resistance between the terminals.
      Standard resistance

Condition	Specified Condition
Approximately 20°C (68°F)	2.32 to 2.59 kΩ
Approximately 80°C (176°F)	0.310 to 0.326 kΩ

NOTICE:
When checking the engine coolant temperature sensor in water, keep the terminals dry. After the check, wipe the sensor dry.
If the resistance is not as specified, replace the engine coolant temperature sensor.

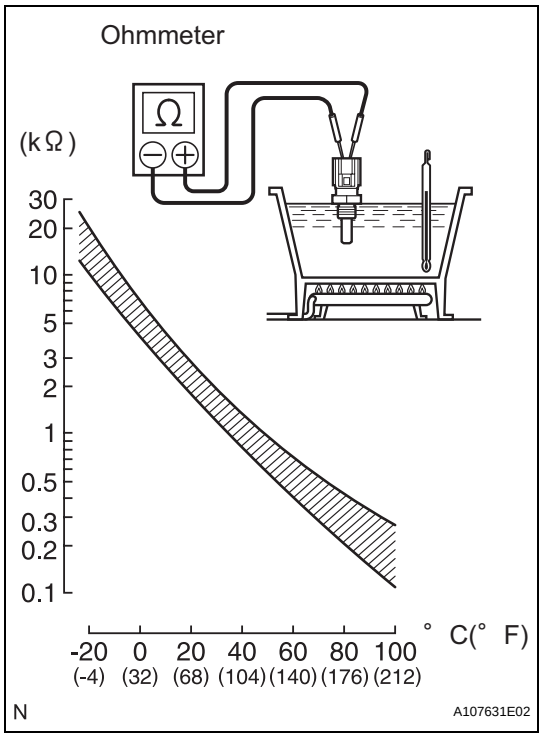

INSTALLATION

1. INSTALL ENGINE COOLANT TEMPERATURE SENSOR

(a) Provisionally install the engine coolant temperature sensor through a new gasket.

(b) Using SST, tighten the engine coolant temperature sensor.
SST 09817-33190
Torque: 20 N*m (204 kgf*cm, 15 ft.*lbf)

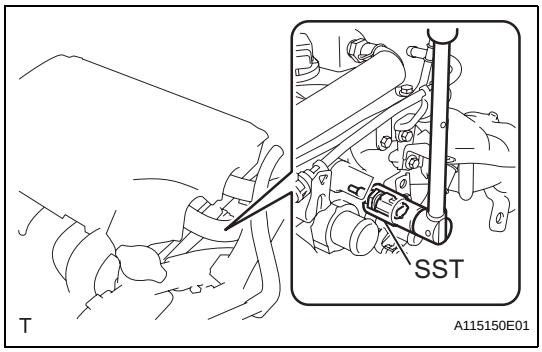

(c) Connect the engine coolant temperature sensor connector.

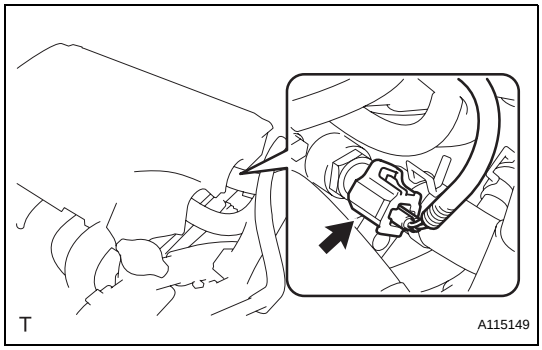

2. CONNECT CABLE TO NEGATIVE BATTERY TERMINAL
Torque: 5.4 N*m (55 kgf*cm, 48 in.*lbf)

3. ADD ENGINE COOLANT (See page CO-8)

4. CHECK FOR ENGINE COOLANT LEAKAGE (See page CO-1)

ES

THROTTLE BODY

COMPONENTS

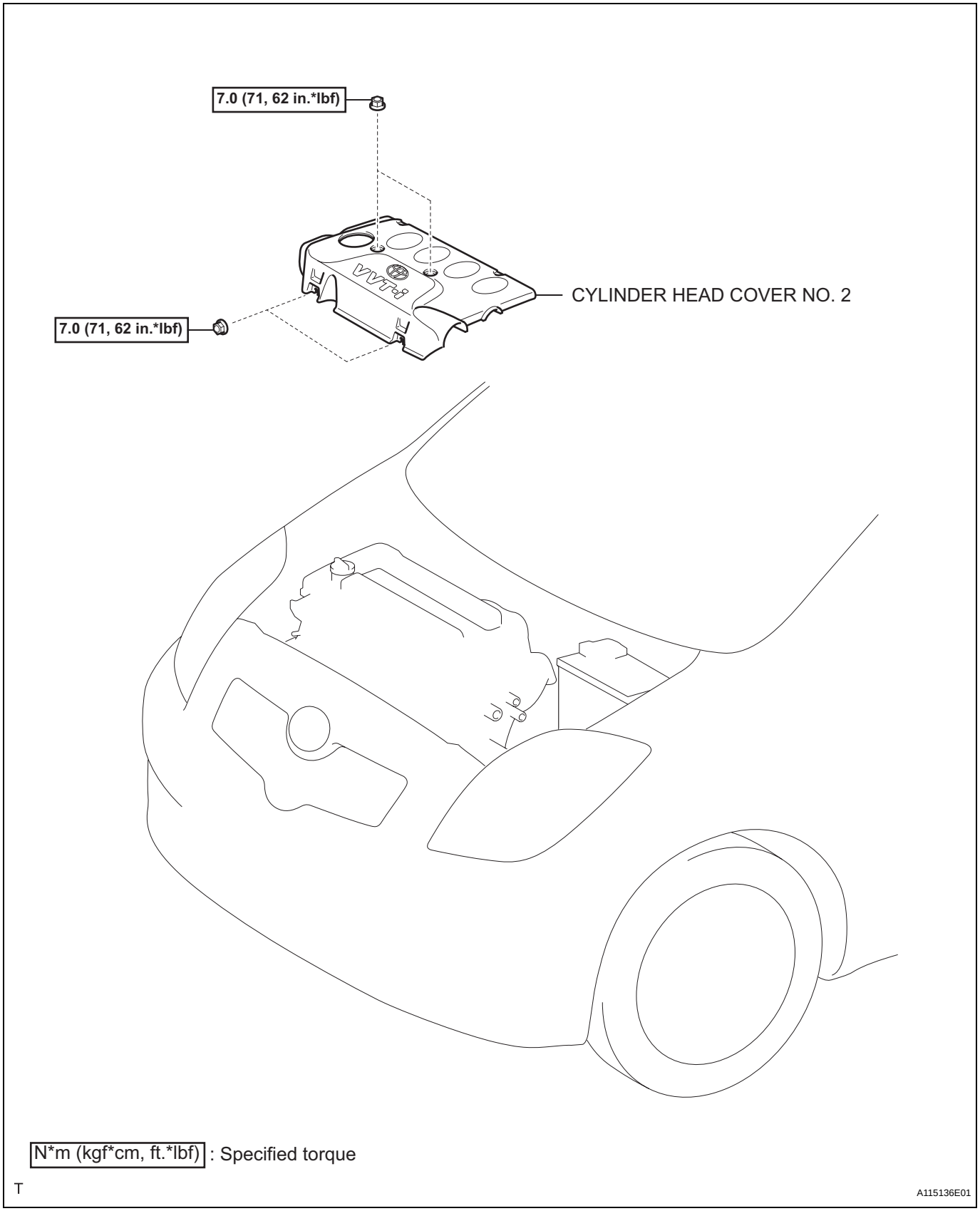

ES

ES

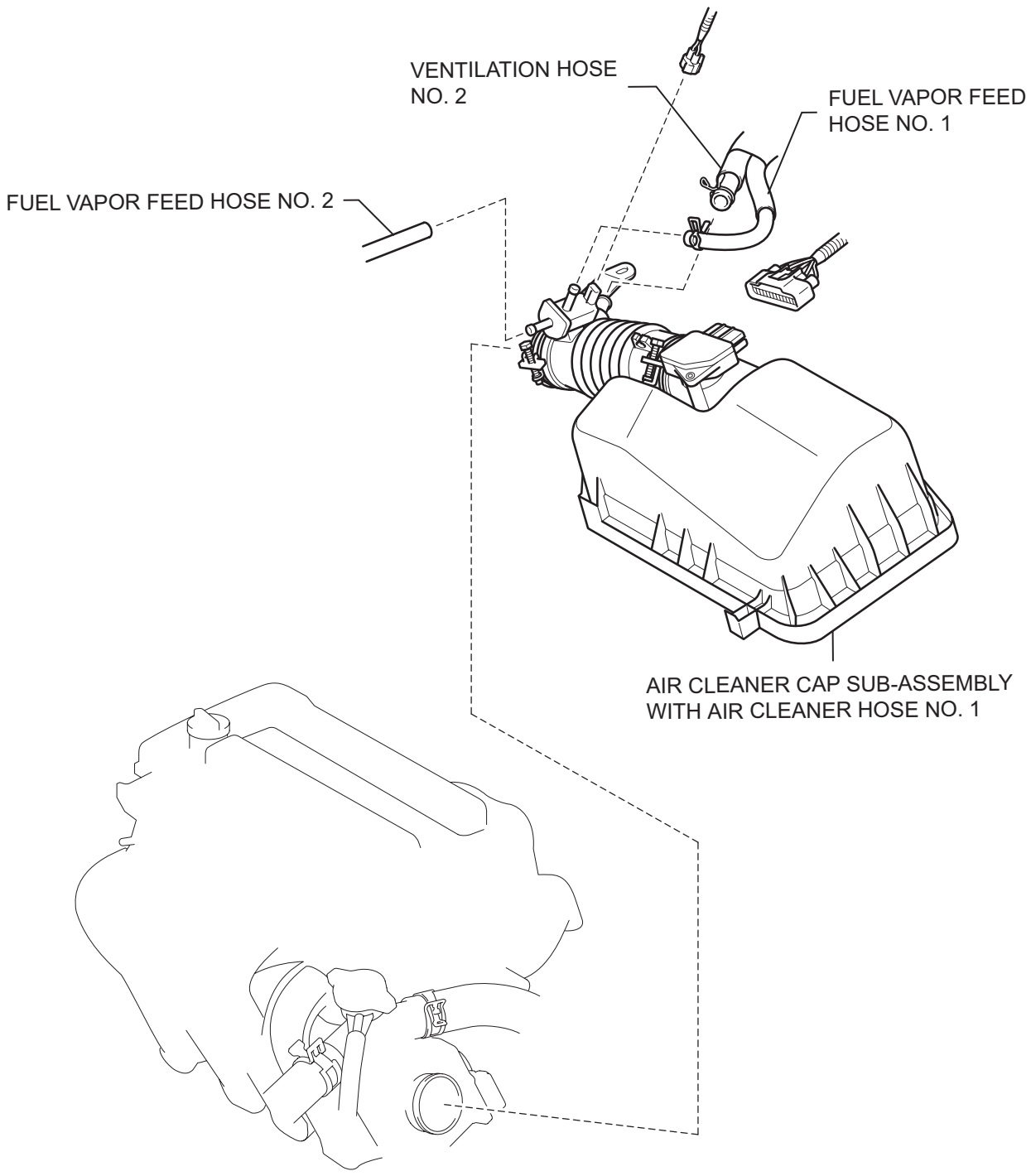

T

A133592E01

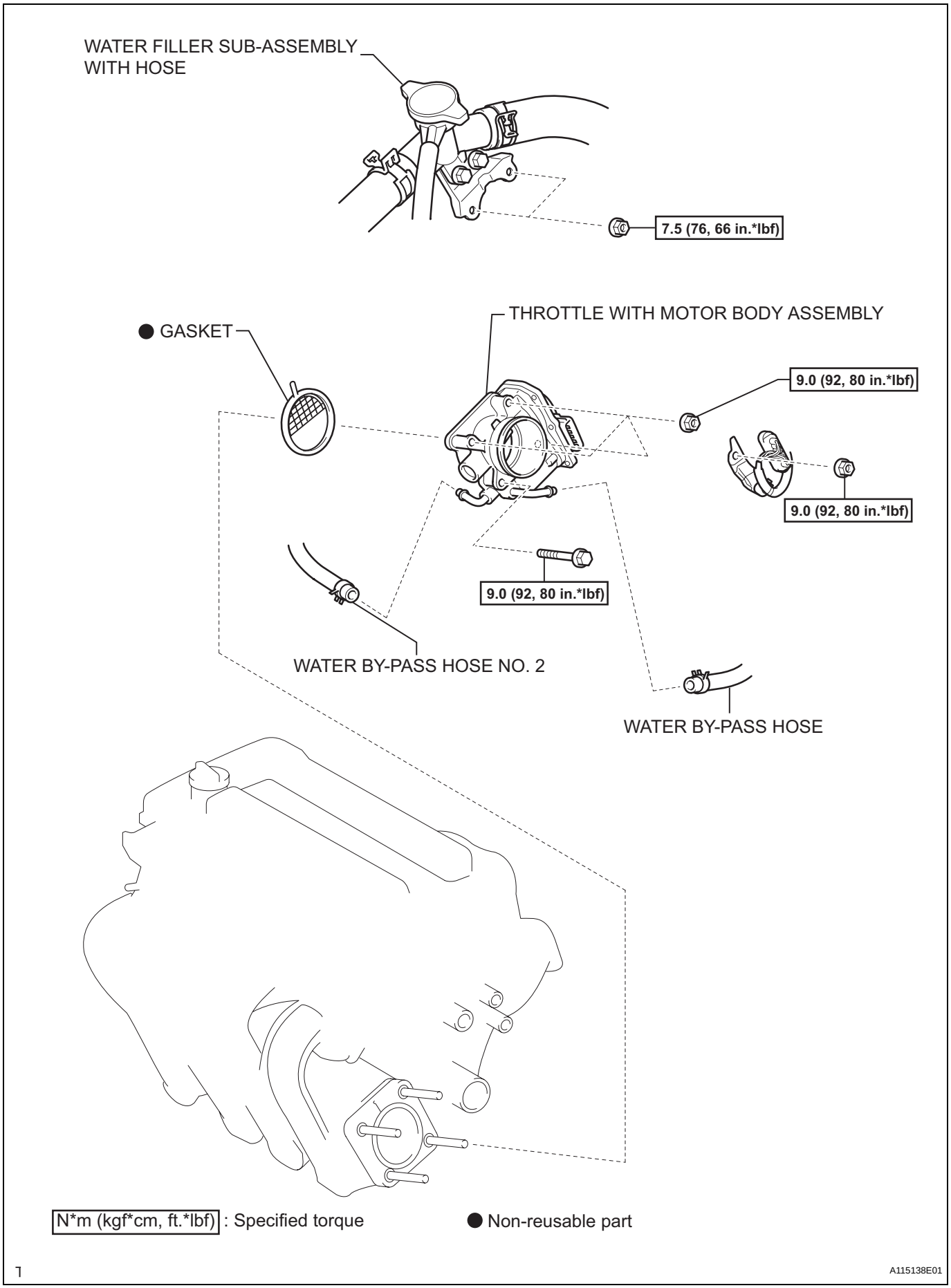
WATER FILLER SUB-ASSEMBLY WITH HOSE
7.5 (76, 66 in.*lbf)
THROTTLE WITH MOTOR BODY ASSEMBLY
● GASKET
9.0 (92, 80 in.*lbf)
9.0 (92, 80 in.*lbf)
9.0 (92, 80 in.*lbf)
WATER BY-PASS HOSE NO. 2
WATER BY-PASS HOSE
N*m (kgf*cm, ft.*lbf) : Specified torque
● Non-reusable part
A115138E01

ES

ON-VEHICLE INSPECTION

1. INSPECT THROTTLE WITH MOTOR BODY ASSEMBLY

(a) Check the throttle control motor operating sounds.
  (1) Turn the ignition switch to ON.
  (2) When pressing the accelerator pedal, listen for sounds of the motor running. Make sure no friction noise comes from the motor.

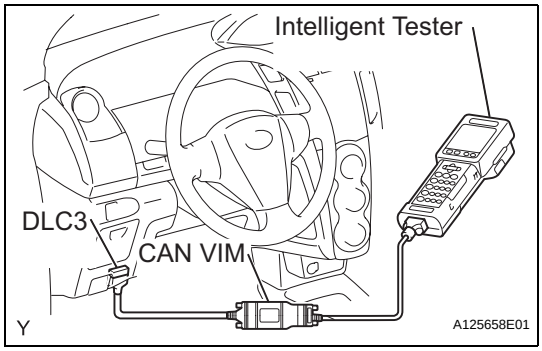

(b) Check the throttle position sensor.
  (1) Connect an intelligent tester to the DLC3.
  (2) Turn the ignition switch to ON.
  (3) Push the intelligent tester main switch ON.
  (4) Select the following menu items:
  DIAGNOSIS / ENHANCED OBD II / DATA LIST / THROTTLE POS.
  (5) Depress the accelerator pedal. When the throttle valve is fully open, check that the value of the "THROTTLE POS" is within the specifications.
  Standard throttle valve opening percentage: 60 % or more
  NOTICE:
  When checking the standard throttle valve opening percentage, the shift lever should be in the neutral position.
  If the percentage is less than 60 %, replace the throttle with motor body assembly.

REMOVAL

1. **DISCONNECT CABLE FROM NEGATIVE BATTERY TERMINAL**
2. **DRAIN ENGINE COOLANT (See page CO-8)**
3. **REMOVE CYLINDER HEAD COVER NO. 2 (See page IG-9)**
4. **REMOVE AIR CLEANER CAP SUB-ASSEMBLY WITH AIR CLEANER HOSE NO. 1**
   (a) Disconnect fuel vapor feed hose No. 1 and fuel vapor feed hose No. 2 from the vacuum switching valve assembly.
   (b) Disconnect the vacuum switching valve assembly connector and wire harness clamp.

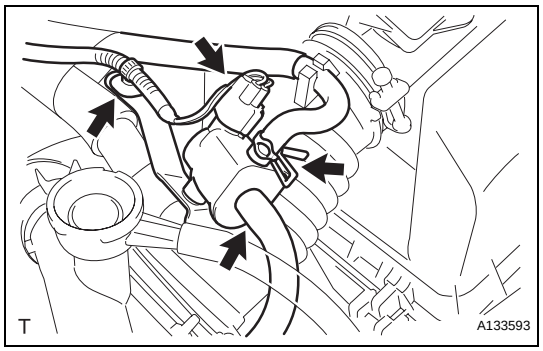

   (c) Disconnect ventilation hose No. 2.

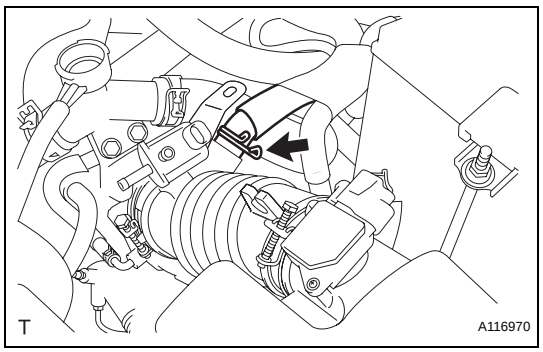

   (d) Disconnect the wire harness clamp and mass air flow meter connector.

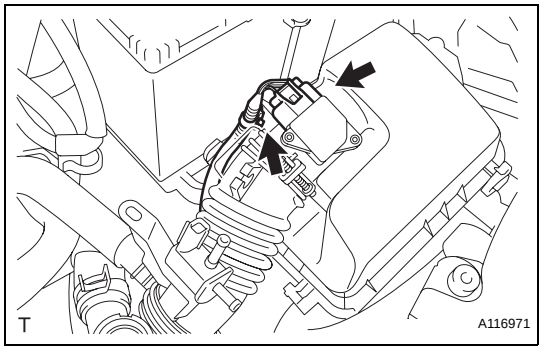

   (e) Loosen the hose clamp, unlock the air cleaner assembly clamp and remove air cleaner cap sub-assembly with air cleaner hose No. 1.

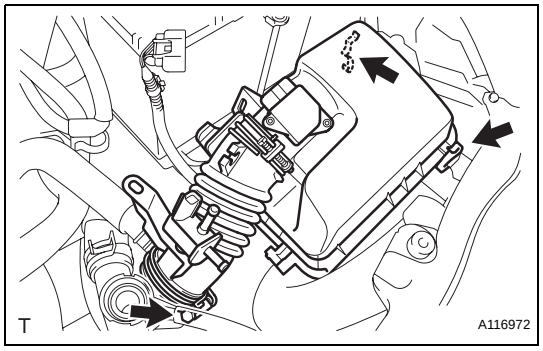

ES

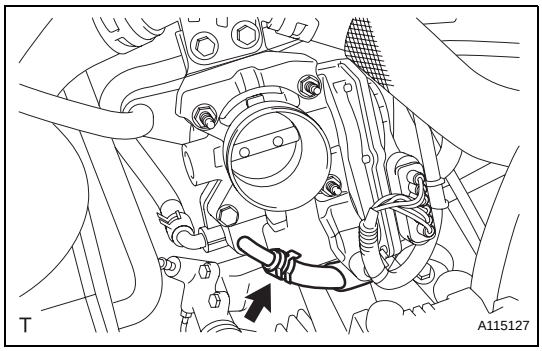

5. DISCONNECT WATER BY-PASS HOSE

(a) Disconnect the water by-pass hose.

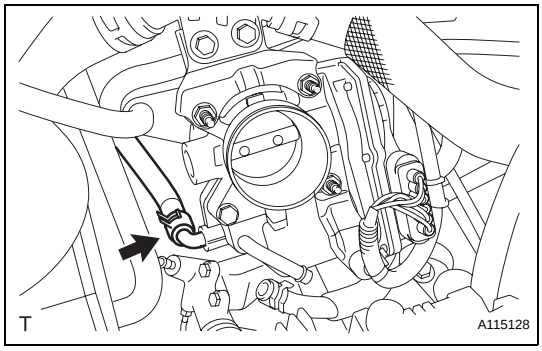

6. DISCONNECT WATER BY-PASS HOSE NO. 2

(a) Disconnect water by-pass hose No. 2.

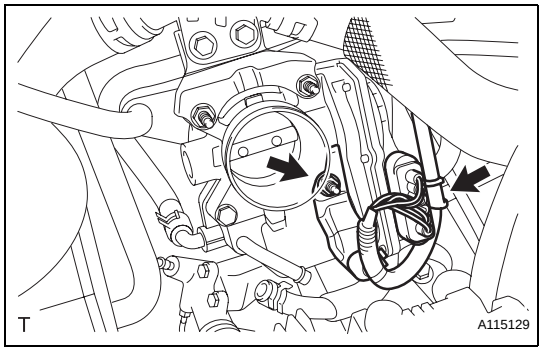

7. REMOVE THROTTLE WITH MOTOR BODY ASSEMBLY

(a) Disconnect the throttle with motor body assembly connector.

(b) Remove the nut and remove the wire harness with bracket.

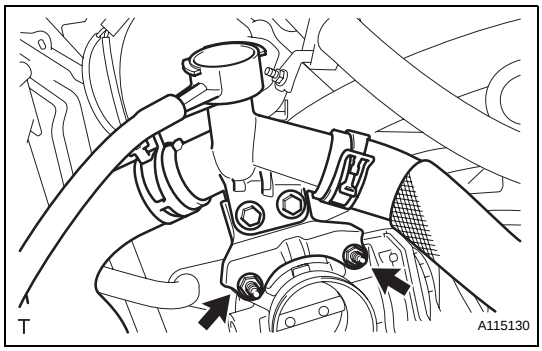

(c) Remove the 2 nuts and remove the water filler sub-assembly with hose.

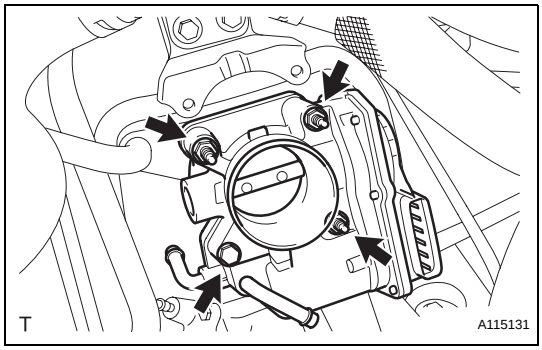

(d) Remove the bolt and 3 nuts and remove the throttle with motor body assembly.

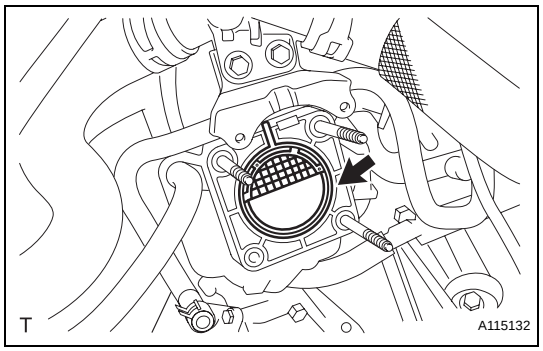

(e) Remove the gasket from the intake manifold.

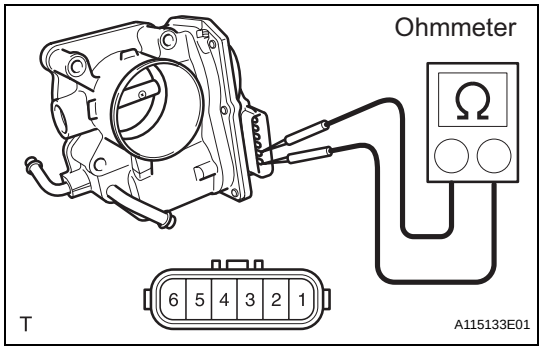

INSPECTION

1. INSPECT THROTTLE WITH MOTOR BODY ASSEMBLY

(a) Check the resistance.

(1) Using an ohmmeter, measure the resistance between the terminals.

Standard resistance

Tester Connection	Specified Condition
1 (M-) - 2 (M+)	0.3 to 100 Ω at 20°C (68°F)

If the result is not as specified, replace the throttle with motor body assembly.

INSTALLATION

1. INSTALL THROTTLE WITH MOTOR BODY ASSEMBLY

(a) Install a new gasket onto the intake manifold.

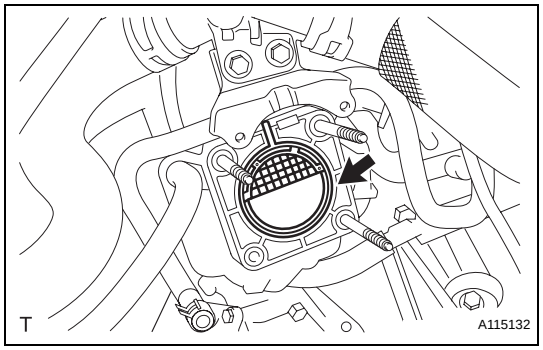

(b) Install the throttle with motor body assembly using the bolt and 3 nuts.

Torque: 9.0 N*m (92 kgf*cm, 80 in.*lbf)

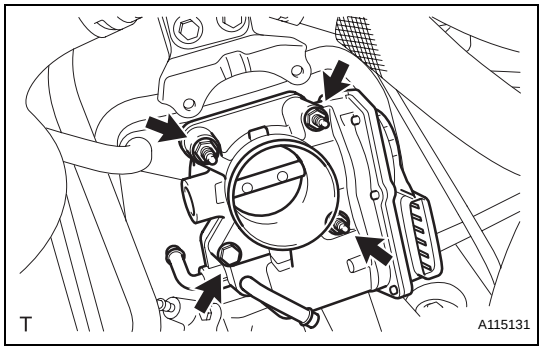

ES

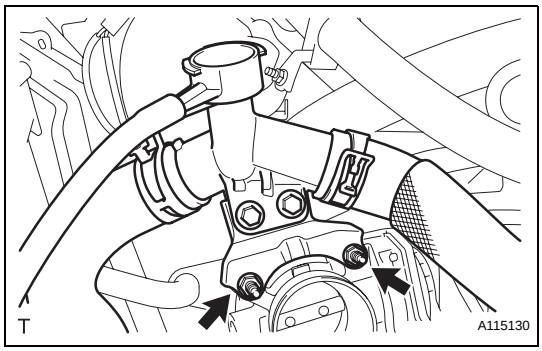

(c) Install the water filler sub-assembly with hose using the 2 nuts.
Torque: 7.5 N*m (76 kgf*cm, 66 in.*lbf)

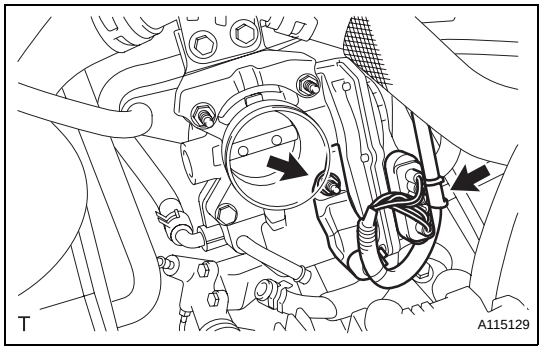

(d) Install the wire harness with bracket using the nut.
Torque: 9.0 N*m (92 kgf*cm, 80 in.*lbf)
(e) Connect the throttle with motor body assembly connector.

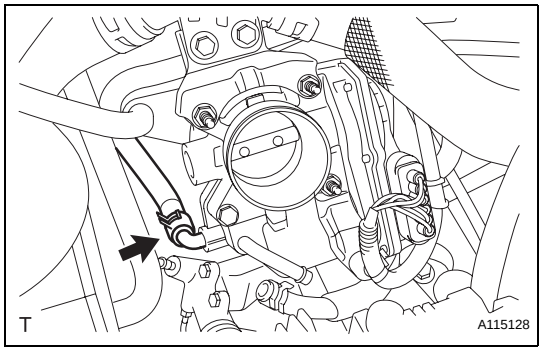

2. CONNECT WATER BY-PASS HOSE NO. 2
(a) Connect water by-pass hose No. 2.

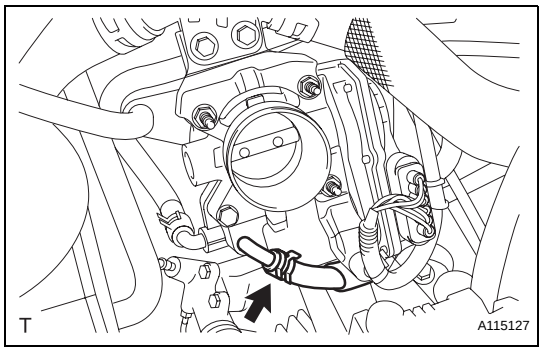

3. CONNECT WATER BY-PASS HOSE
(a) Connect the water by-pass hose.

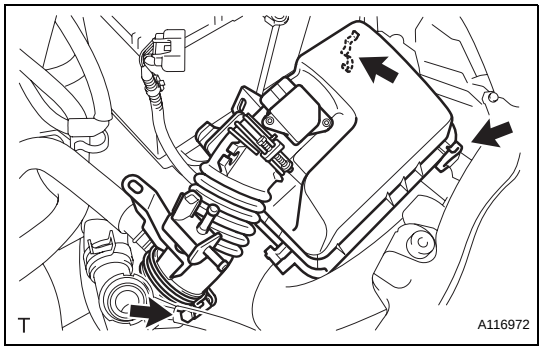

4. INSTALL AIR CLEANER CAP SUB-ASSEMBLY WITH AIR CLEANER HOSE NO. 1
(a) Install air cleaner cap sub-assembly with air cleaner hose No. 1.
(b) Tighten the hose clamp to the specified torque.
Torque: 3.0 N*m (31 kgf*cm, 27 in.*lbf)

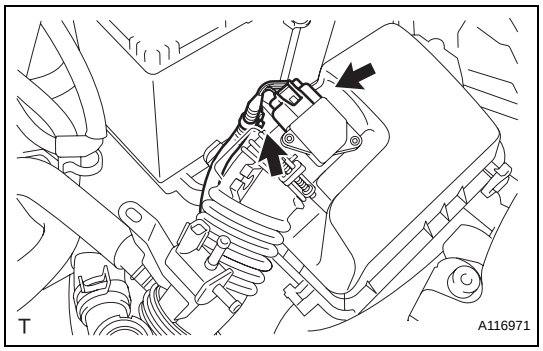

(c) Connect the wire harness clamp and mass air flow meter connector.

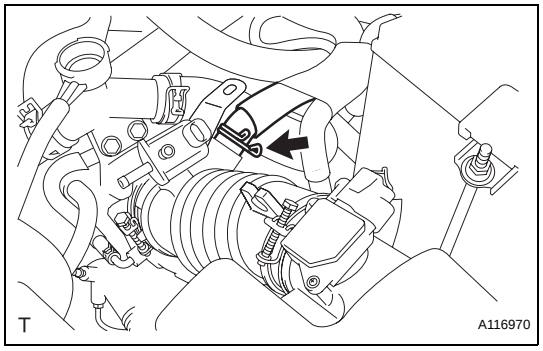

(d) Connect ventilation hose No. 2.

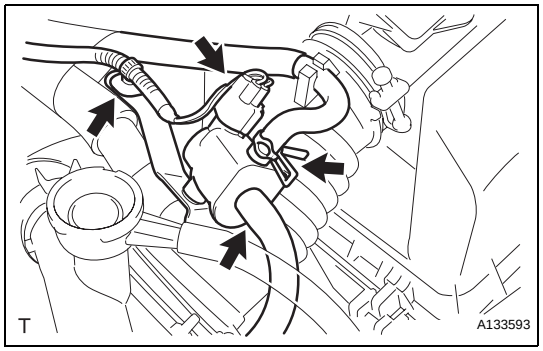

(e) Connect the vacuum switching valve assembly connector and wire harness clamp.
(f) Connect fuel vapor feed hose No. 1 and fuel vapor feed hose No. 2 to the vacuum switching valve assembly.

5. CONNECT CABLE TO NEGATIVE BATTERY TERMINAL
Torque: 5.4 N*m (55 kgf*cm, 48 in.*lbf)

6. ADD ENGINE COOLANT (See page CO-8)

7. CHECK FOR ENGINE COOLANT LEAKAGE (See page CO-1)

8. INSTALL CYLINDER HEAD COVER NO. 2 (See page IG-10)

ES

KNOCK SENSOR

COMPONENTS

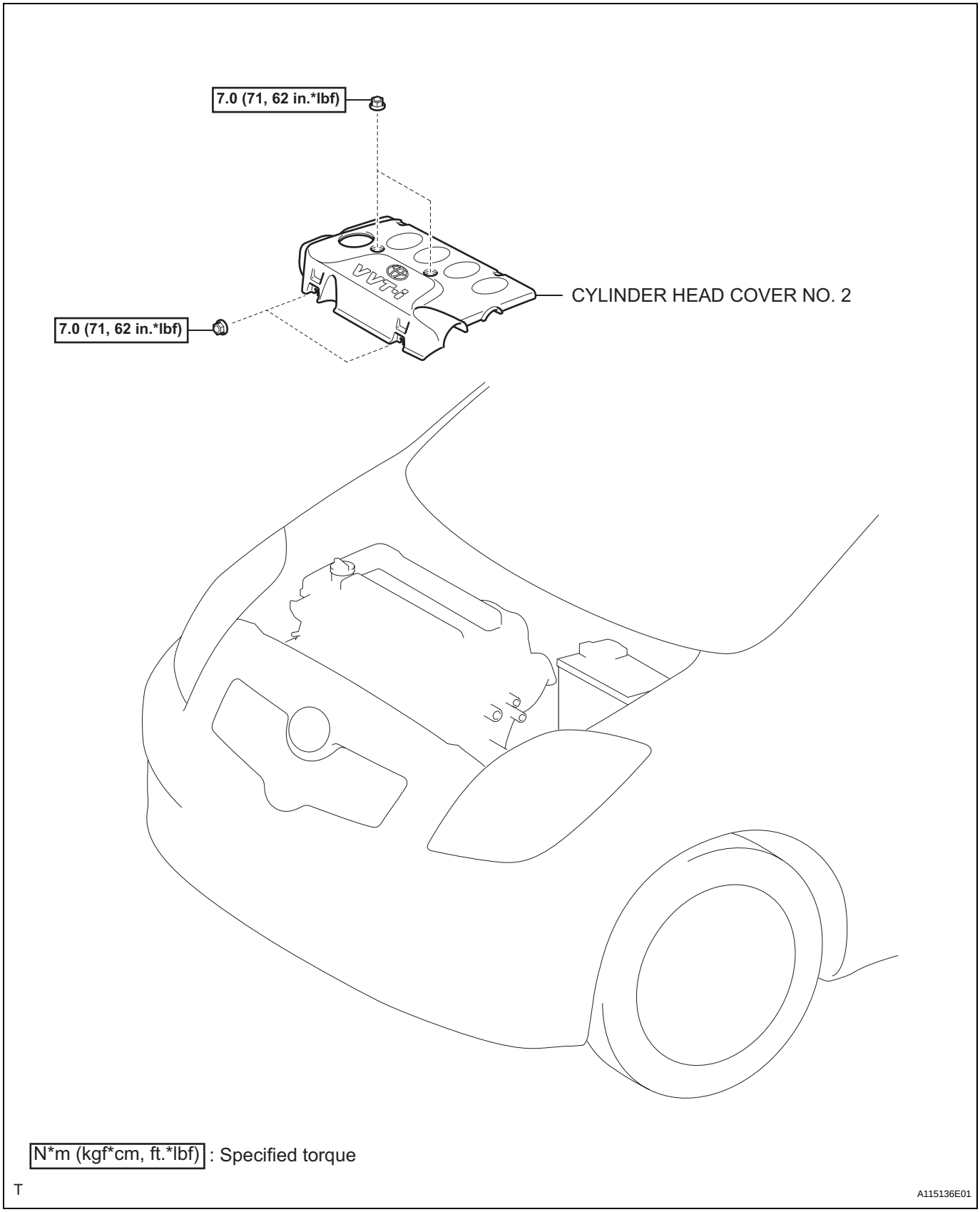

ES

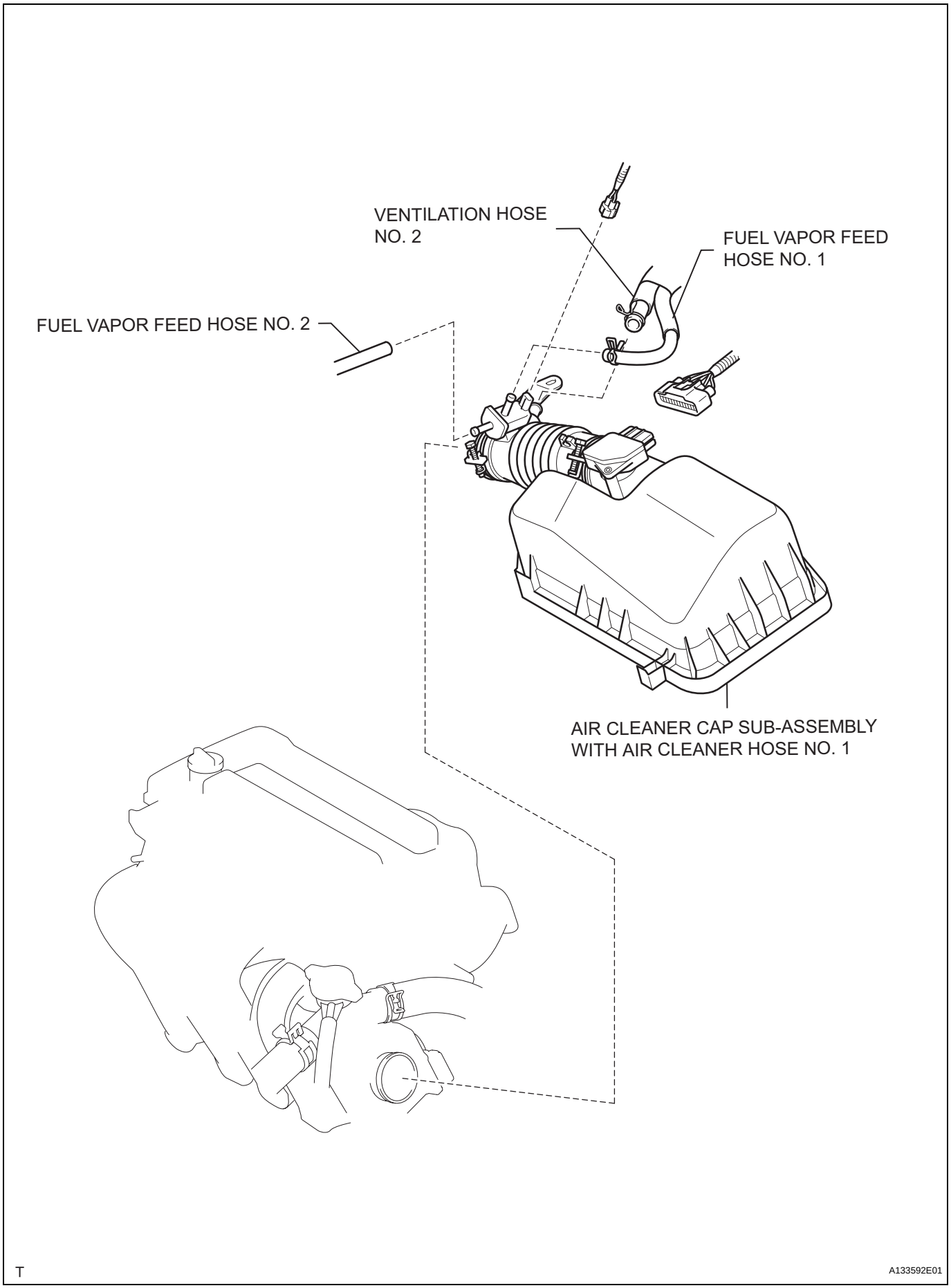
VENTILATION HOSE
NO. 2
FUEL VAPOR FEED
HOSE NO. 1
FUEL VAPOR FEED HOSE NO. 2
AIR CLEANER CAP SUB-ASSEMBLY
WITH AIR CLEANER HOSE NO. 1
T
A133592E01

ES

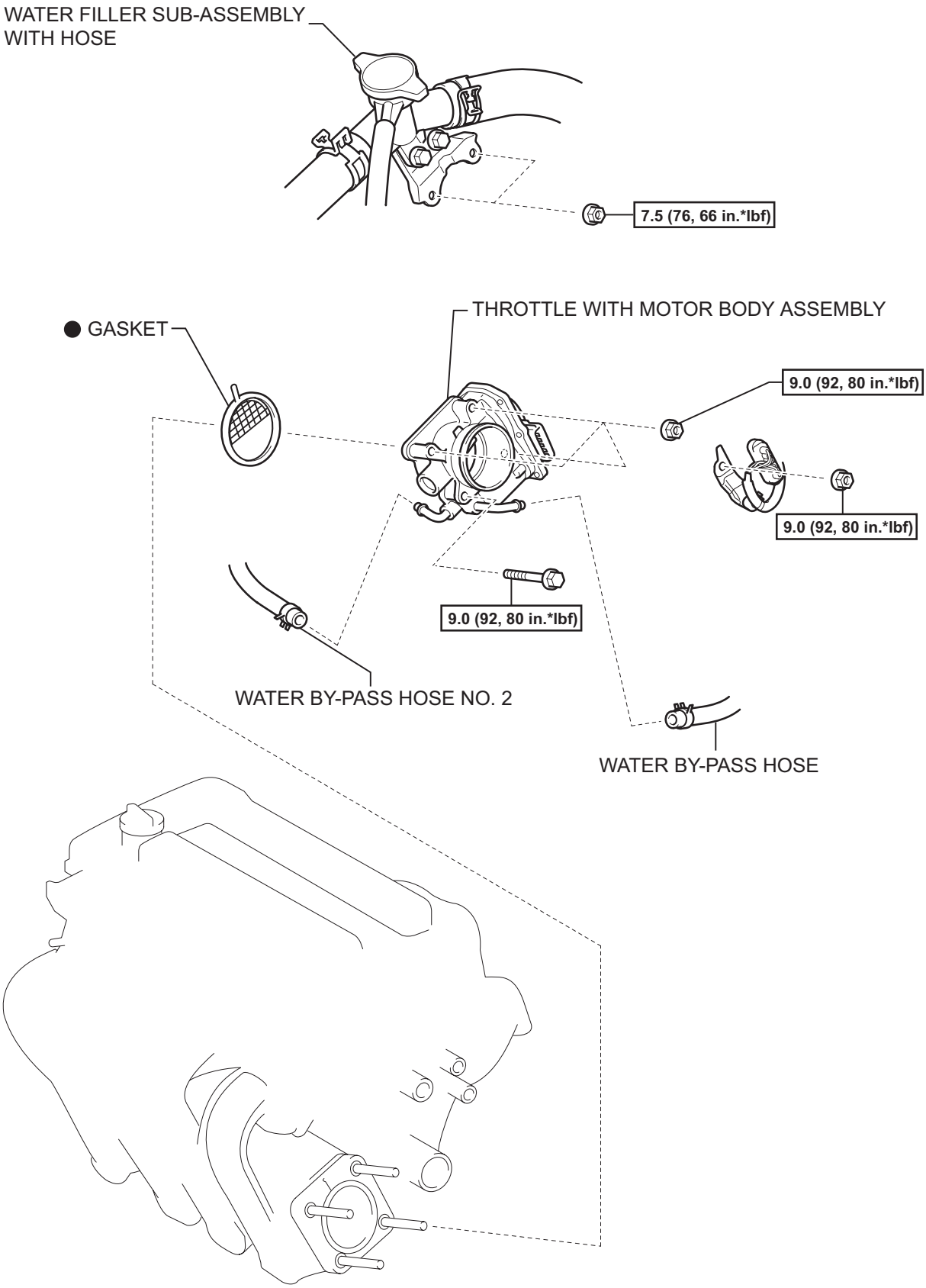

N*m (kgf*cm, ft.*lbf) : Specified torque ● Non-reusable part

A115138E01

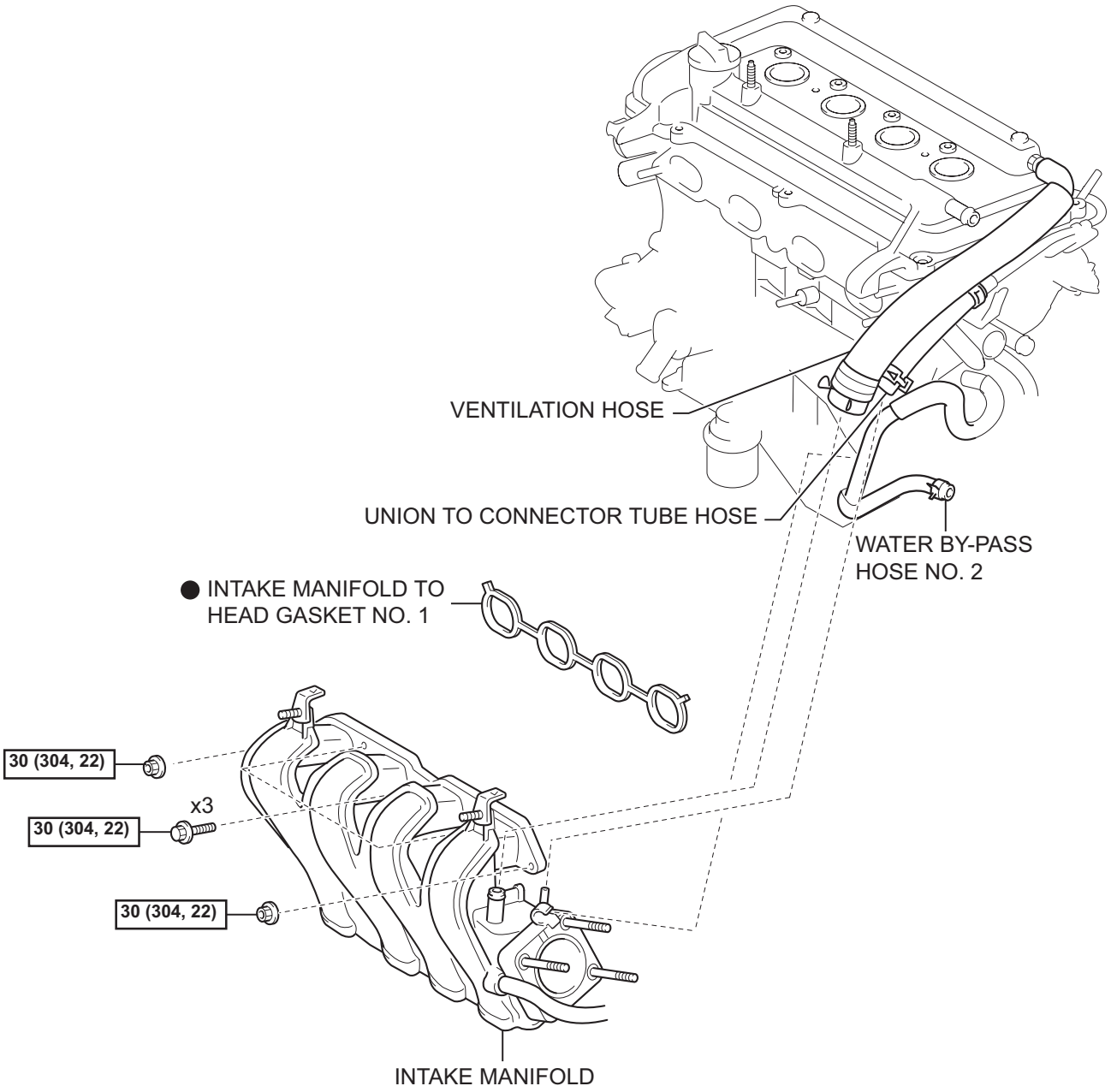

N*m (kgf*cm, ft.*lbf) : Specified torque

● Non-reusable part

T

A116974E01

ES

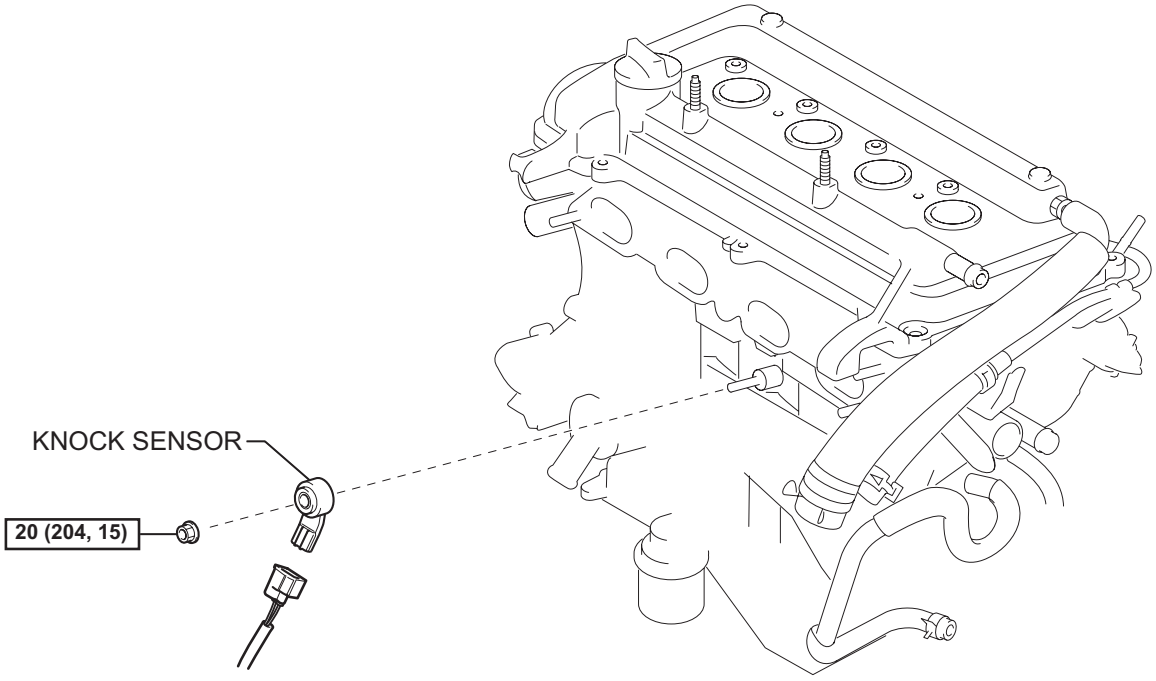

N*m (kgf*cm, ft*lbf) : Specified torque

T

A121464E01

REMOVAL

1. **DISCONNECT CABLE FROM NEGATIVE BATTERY TERMINAL**
2. **DRAIN ENGINE COOLANT (See page CO-8)**
3. **REMOVE CYLINDER HEAD COVER NO. 2 (See page IG-9)**
4. **REMOVE AIR CLEANER CAP SUB-ASSEMBLY WITH AIR CLEANER HOSE NO. 1 (See page ES-410)**
5. **DISCONNECT WATER BY-PASS HOSE (See page ES-411)**
6. **DISCONNECT WATER BY-PASS HOSE NO. 2 (See page ES-411)**
7. **REMOVE THROTTLE WITH MOTOR BODY ASSEMBLY (See page ES-412)**
8. **REMOVE INTAKE MANIFOLD**
   (a) Separate the engine wire harness from the intake manifold.

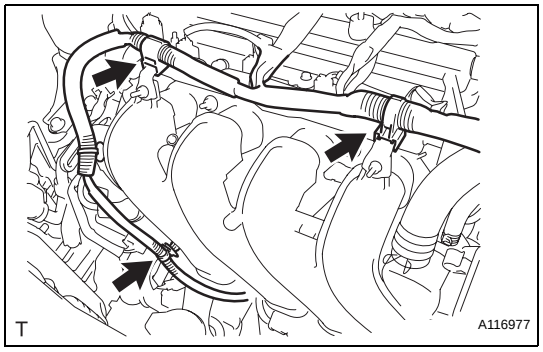

   (b) Separate water by-pass hose No. 2.

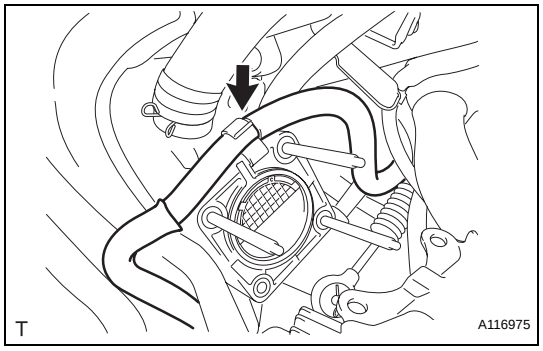

   (c) Disconnect the ventilation hose.

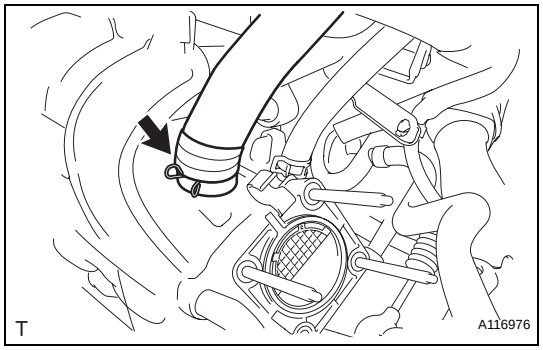

ES

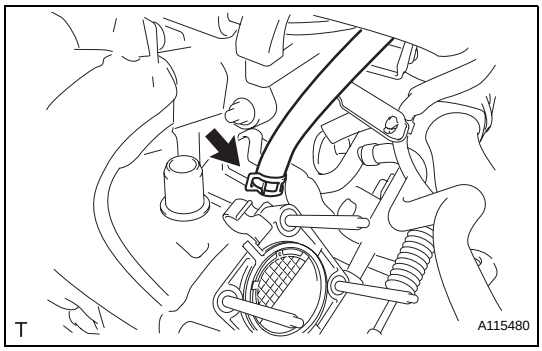

(d) Disconnect the union to connector tube hose.

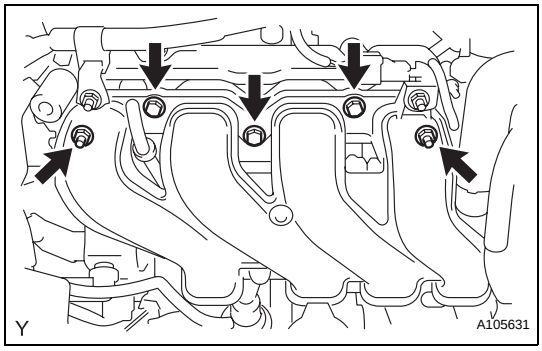

(e) Remove the 3 bolts and 2 nuts and remove the intake manifold.
(f) Remove the gasket from the intake manifold.

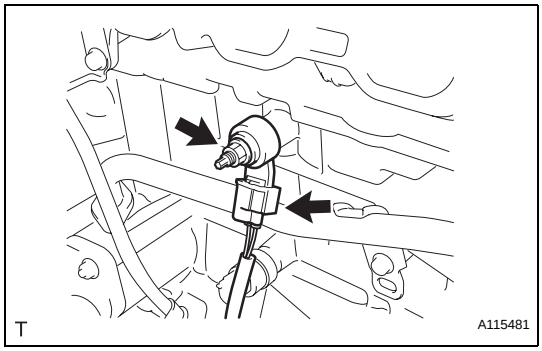

9. REMOVE KNOCK SENSOR
(a) Disconnect the knock sensor connector.
(b) Remove the nut and remove the knock sensor.

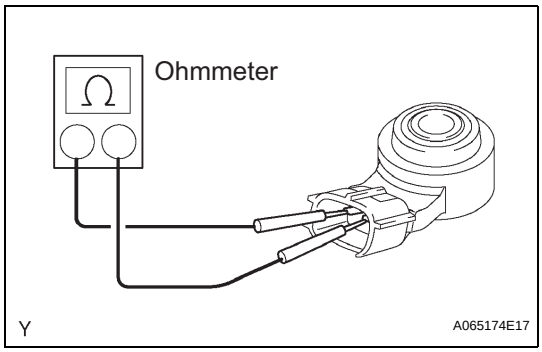

INSPECTION

1. INSPECT KNOCK SENSOR
(a) Check the resistance.
(1) Using an ohmmeter, measure the resistance between the terminals.
Standard resistance:
120 to 280 kΩ at 20°C (68°F)
If the result is not as specified, replace the knock sensor.

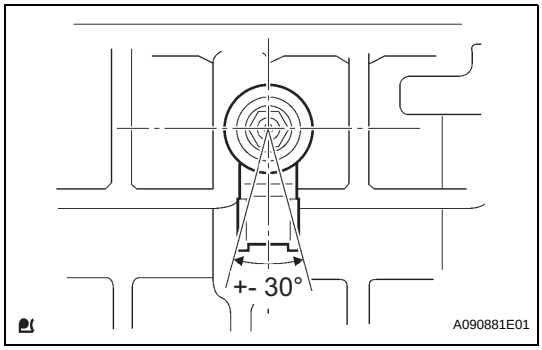

INSTALLATION

1. INSTALL KNOCK SENSOR
(a) Install the knock sensor with the nut as shown in the illustration.
Torque: 20 N*m (204 kgf*cm, 15 ft.*lbf)
(b) Connect the knock sensor connector.

2. INSTALL INTAKE MANIFOLD
(a) Install a new gasket onto the intake manifold.

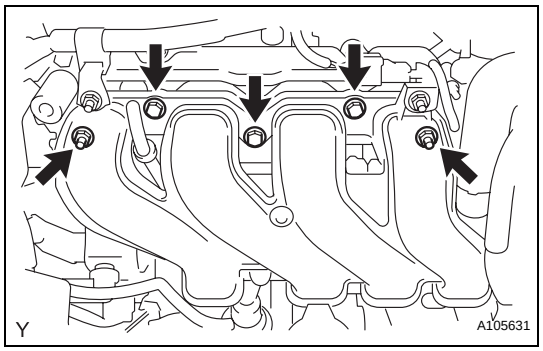

(b) Install the intake manifold with the 3 bolts and 2 nuts.
Torque: 30 N*m (304 kgf*cm, 22 ft.*lbf)

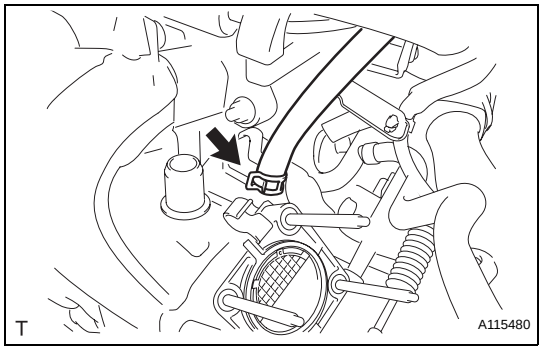

(c) Connect the union to connector tube hose.

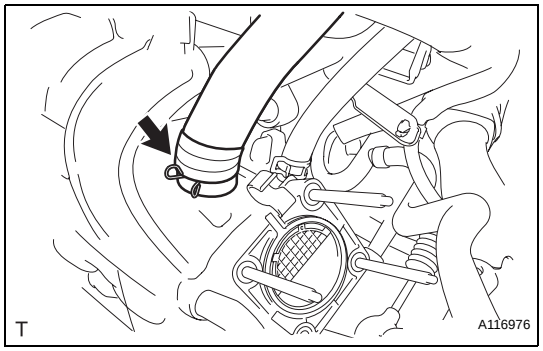

(d) Connect the ventilation hose.

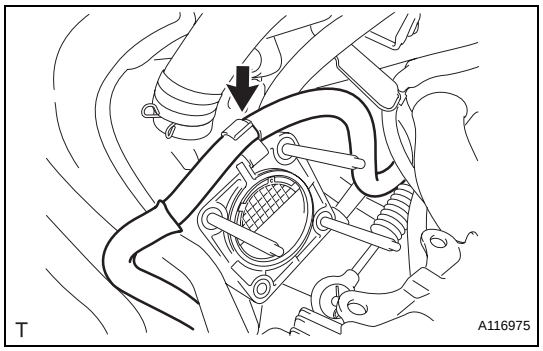

(e) Install water by-pass hose No. 2.

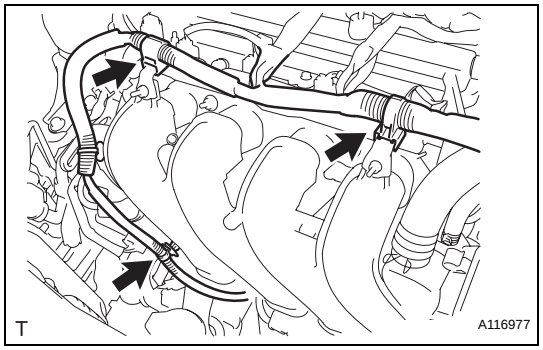

(f) Install the engine wire harness onto the intake manifold.

3. **INSTALL THROTTLE WITH MOTOR BODY ASSEMBLY (See page ES-413)**

4. **CONNECT WATER BY-PASS HOSE NO. 2 (See page ES-414)**

5. **CONNECT WATER BY-PASS HOSE (See page ES-414)**

6. **INSTALL AIR CLEANER CAP SUB-ASSEMBLY WITH AIR CLEANER HOSE NO. 1 (See page ES-414)**
7. **CONNECT CABLE TO NEGATIVE BATTERY TERMINAL**
   Torque: 5.4 N*m (55 kgf*cm, 48 in.*lbf)
8. **ADD ENGINE COOLANT (See page CO-8)**
9. **CHECK FOR ENGINE COOLANT LEAKAGE (See page CO-1)**
10. **INSTALL CYLINDER HEAD COVER NO. 2 (See page IG-10)**

INTEGRATION RELAY

COMPONENTS

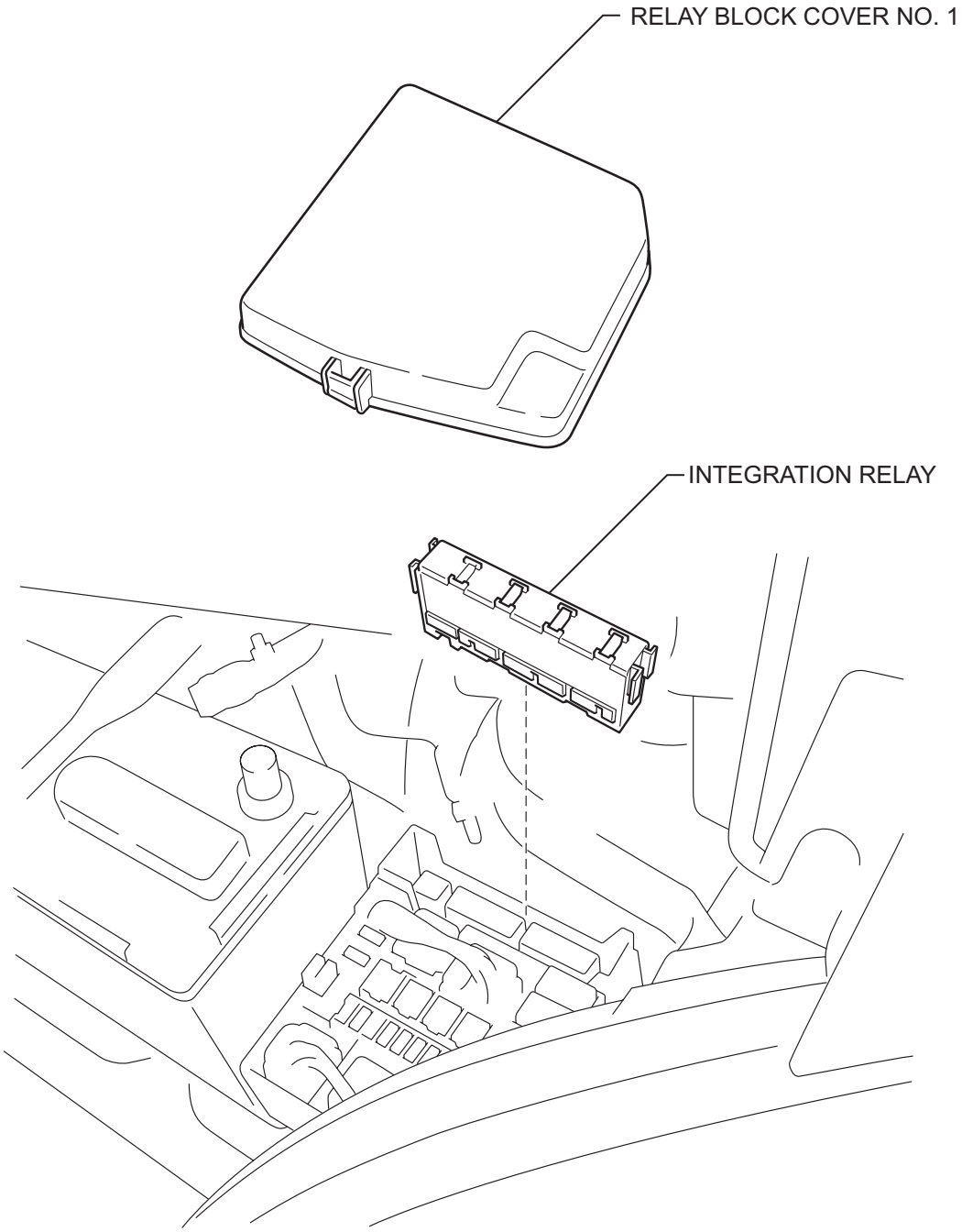

N

A115401E01

ES

REMOVAL

1. DISCONNECT CABLE FROM NEGATIVE BATTERY TERMINAL

2. REMOVE RELAY BLOCK COVER NO. 1

3. REMOVE INTEGRATION RELAY

(a) Using a screwdriver with its tip wrapped in protective tape, disengage the 2 claws and disconnect the integration relay.

(b) Disconnect the 3 connectors.

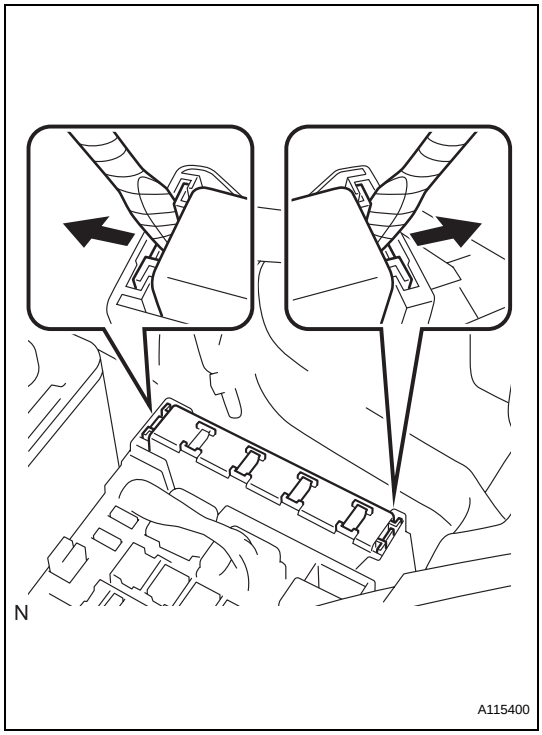

INSPECTION

1. INSPECT INTEGRATION RELAY

(a) Inspect the EFI (20A) fuse.

(1) Disconnect the fuse.

(2) Using an ohmmeter, measure the resistance of the fuse.

Standard resistance

Tester Connection	Specified Condition
1 - 2	Below 1 Ω

(b) Inspect the EFI relay.

(1) Using an ohmmeter, measure the resistance between the terminals.

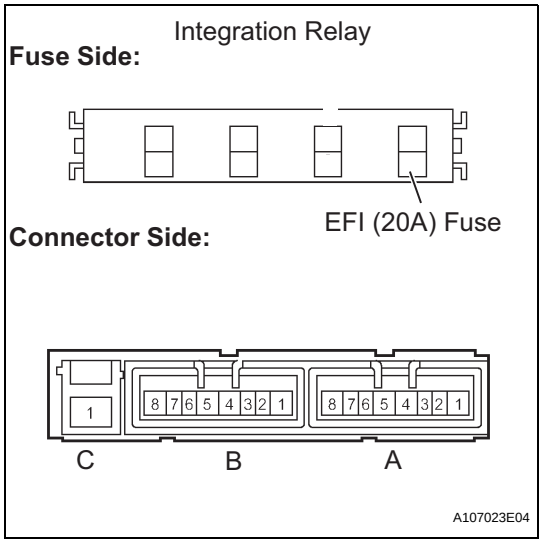

Standard resistance

Tester Connection	Specified Condition
A4 - C1	10 kΩor higher
	Below 1 Ω (Battery voltage applied between terminals A2 and A3)

NOTICE:
While using the battery for the inspection, do not bring the positive and negative tester probes too close to each other as a short circuit may occur.

INSTALLATION

1. INSTALL INTEGRATION RELAY

(a) Connect the 3 connectors.

(b) Attach the integration relay to the engine room relay block.

2. INSTALL RELAY BLOCK COVER NO. 1

3. CONNECT CABLE TO NEGATIVE BATTERY TERMINAL

Torque: 5.4 N*m (55 kgf*cm, 48 in.*lbf)

ECM

COMPONENTS

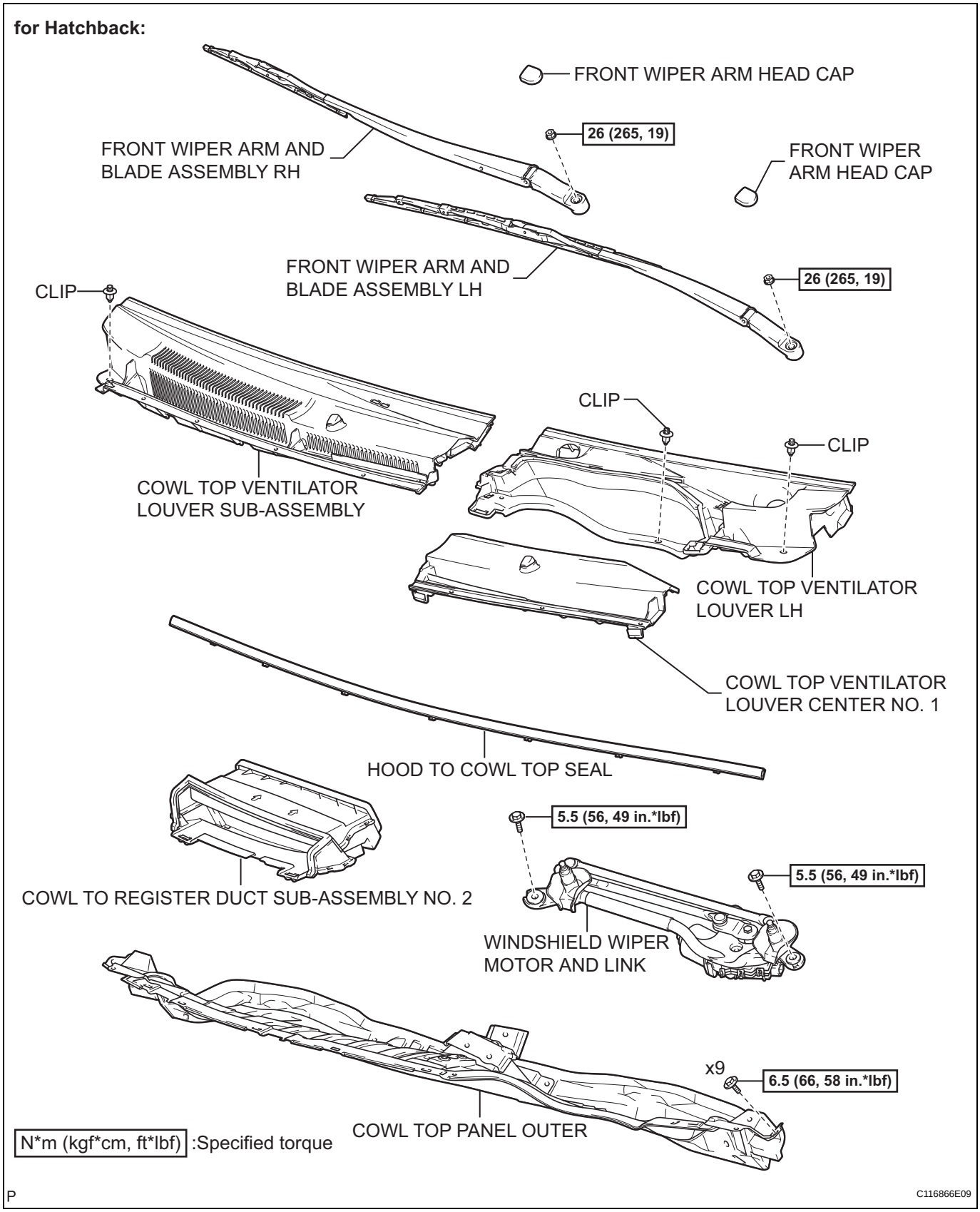

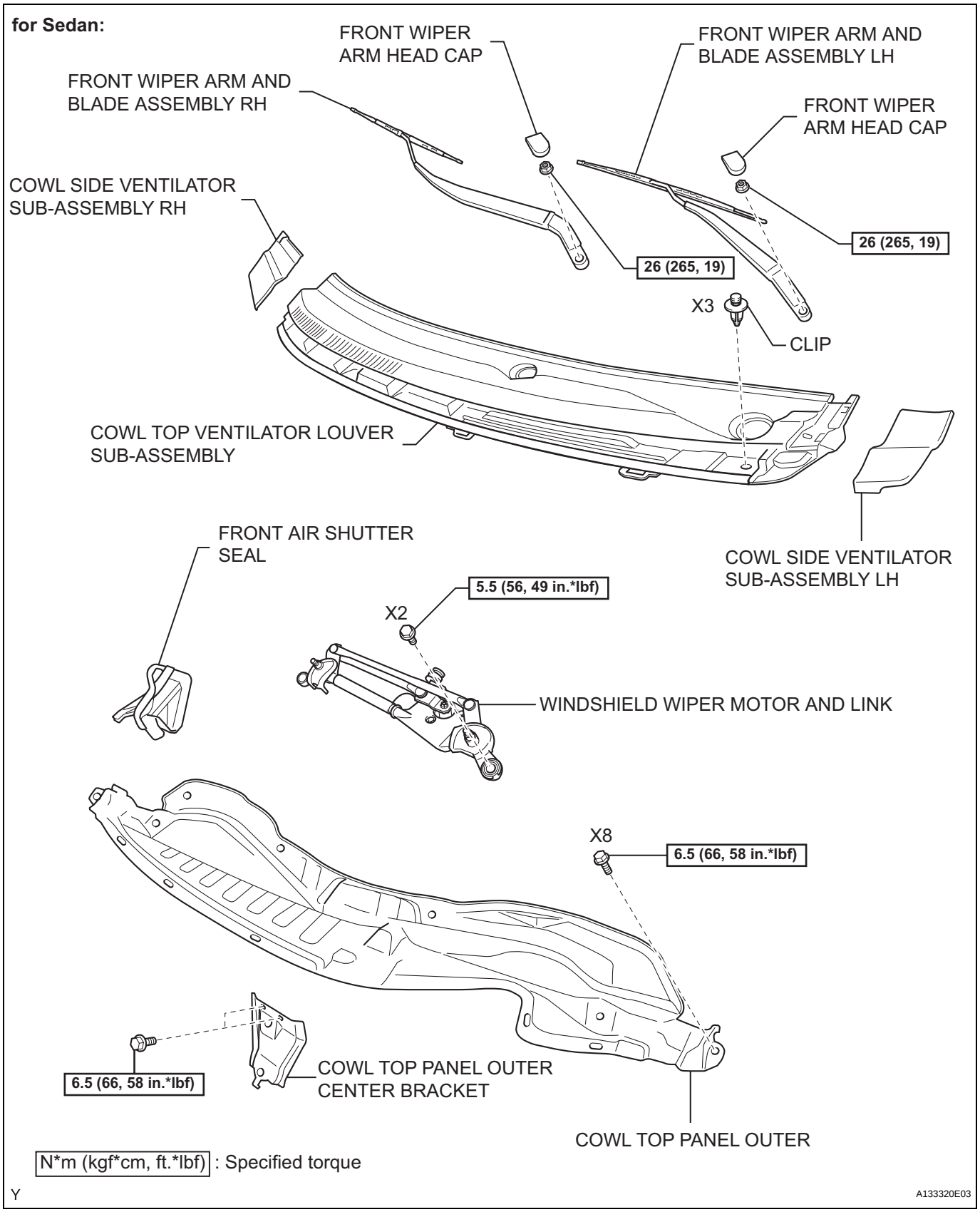
for Sedan:
FRONT WIPER ARM HEAD CAP
FRONT WIPER ARM AND BLADE ASSEMBLY LH
FRONT WIPER ARM AND BLADE ASSEMBLY RH
FRONT WIPER ARM HEAD CAP
COWL SIDE VENTILATOR SUB-ASSEMBLY RH
26 (265, 19)
26 (265, 19)
X3
CLIP
COWL TOP VENTILATOR LOUVER SUB-ASSEMBLY
FRONT AIR SHUTTER SEAL
COWL SIDE VENTILATOR SUB-ASSEMBLY LH
5.5 (56, 49 in.*lbf)
X2
WINDSHIELD WIPER MOTOR AND LINK
X8
6.5 (66, 58 in.*lbf)
6.5 (66, 58 in.*lbf)
COWL TOP PANEL OUTER CENTER BRACKET
COWL TOP PANEL OUTER
N*m (kgf*cm, ft.*lbf) : Specified torque
Y
A133320E03

ES

ES

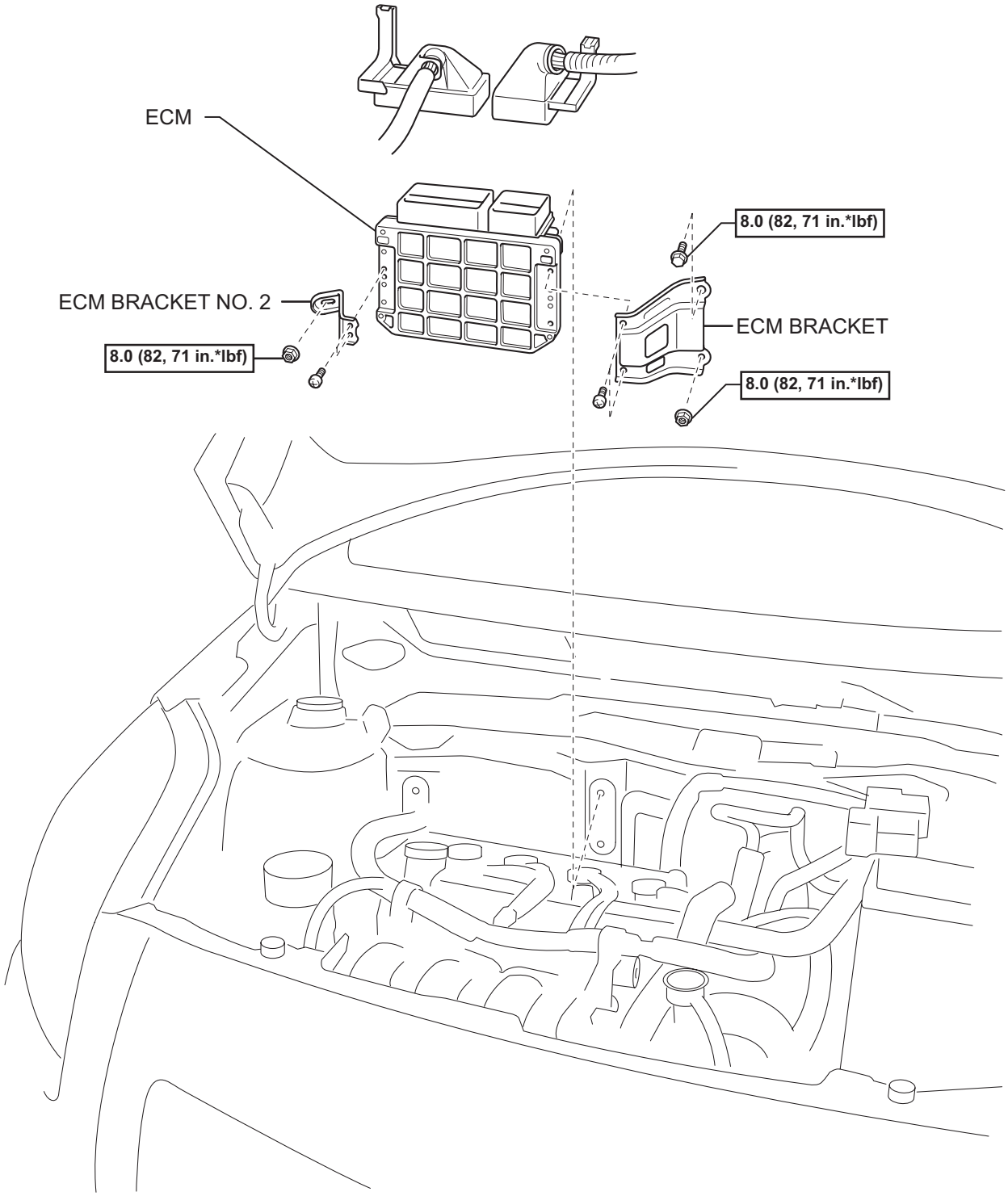

N*m (kgf*cm, ft.*lbf) : Specified torque

Y

A115379E03

REMOVAL

NOTICE:
Replace the ECM with a new one if necessary.

1. **DISCONNECT CABLE FROM NEGATIVE BATTERY TERMINAL**
2. **REMOVE FRONT WIPER ARM HEAD CAP (for Hatchback) (See page WW-17)**
3. **REMOVE FRONT WIPER ARM HEAD CAP (for Sedan) (See page WW-9)**
4. **REMOVE FRONT WIPER ARM AND BLADE ASSEMBLY LH (for Hatchback) (See page WW-17)**
5. **REMOVE FRONT WIPER ARM AND BLADE ASSEMBLY LH (for Sedan) (See page WW-9)**
6. **REMOVE FRONT WIPER ARM AND BLADE ASSEMBLY RH (for Hatchback) (See page WW-17)**
7. **REMOVE FRONT WIPER ARM AND BLADE ASSEMBLY RH (for Sedan) (See page WW-9)**
8. **REMOVE HOOD TO COWL TOP SEAL (for Hatchback) (See page WW-18)**
9. **REMOVE COWL SIDE VENTILATOR SUB-ASSEMBLY LH (for Sedan) (See page WW-10)**
10. **REMOVE COWL SIDE VENTILATOR SUB-ASSEMBLY RH (for Sedan) (See page WW-10)**
11. **REMOVE COWL TOP VENTILATOR LOUVER LH (for Hatchback) (See page WW-18)**
12. **REMOVE COWL TOP VENTILATOR LOUVER SUB-ASSEMBLY (for Hatchback) (See page WW-18)**
13. **REMOVE COWL TOP VENTILATOR LOUVER SUB-ASSEMBLY (for Sedan LHD) (See page WW-10)**
14. **REMOVE WINDSHIELD WIPER MOTOR AND LINK (for Hatchback) (See page WW-19)**
15. **REMOVE WINDSHIELD WIPER MOTOR AND LINK (for Sedan) (See page WW-10)**
16. **REMOVE COWL TO REGISTER DUCT SUB-ASSEMBLY NO. 2 (for Hatchback) (See page EM-122)**

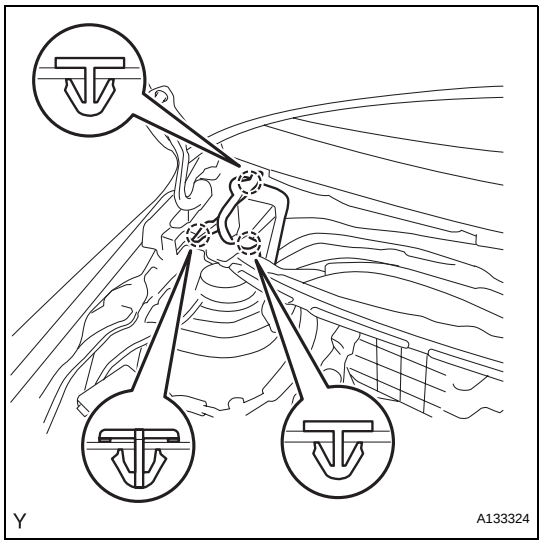

17. REMOVE FRONT AIR SHUTTER SEAL (for Sedan)

(a) Disengage the 3 claws and remove the front air shutter seal.

18. REMOVE COWL TOP PANEL OUTER (for Hatchback) (See page EM-123)

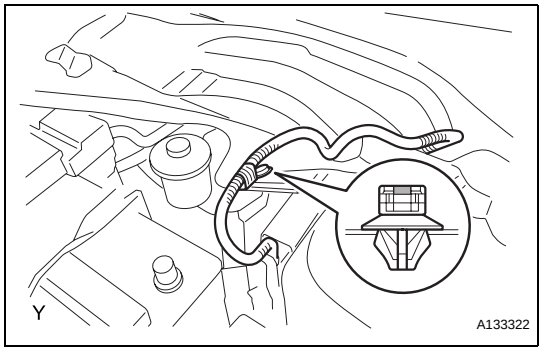

19. REMOVE COWL TOP PANEL OUTER (for Sedan)

(a) Disengage the claw and disconnect the wire harness.

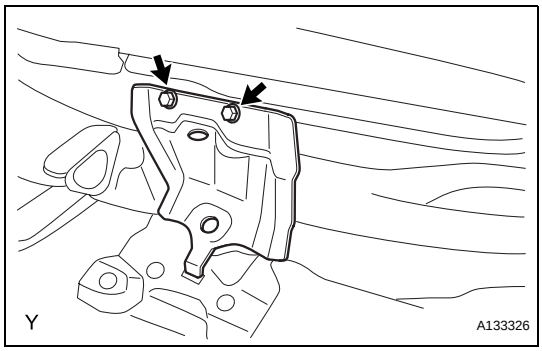

(b) Remove the 2 bolts and remove the cowl top panel outer center bracket.

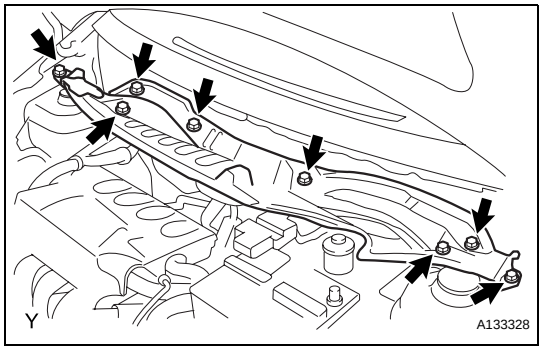

(c) Remove the 8 bolts and remove the cowl top panel outer.

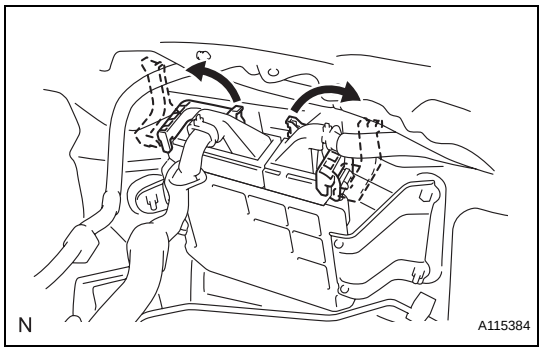

20. REMOVE ECM

(a) Remove the 2 lock knobs and harness clamp.

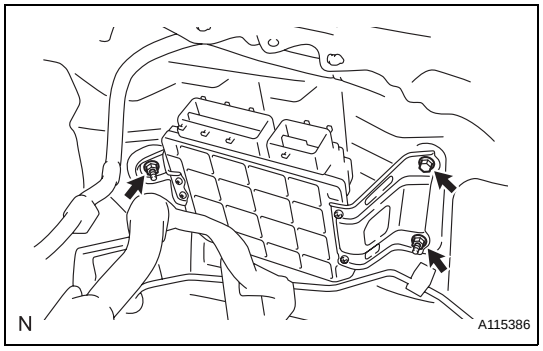

(b) Disconnect the 2 ECM connectors.

(c) Remove the bolt and 2 nuts and remove the ECM.

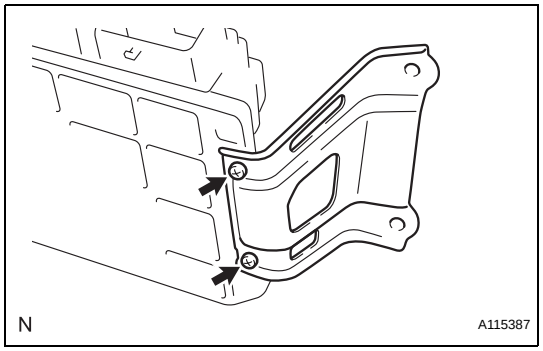

21. REMOVE ECM BRACKET

(a) Remove the 2 screws and the ECM bracket.

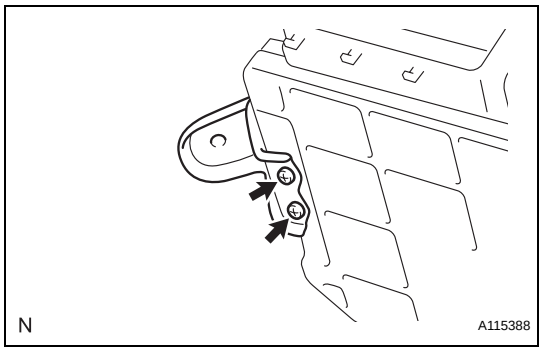

22. REMOVE ECM BRACKET NO. 2

(a) Remove the 2 screws and ECM bracket No. 2.

INSTALLATION

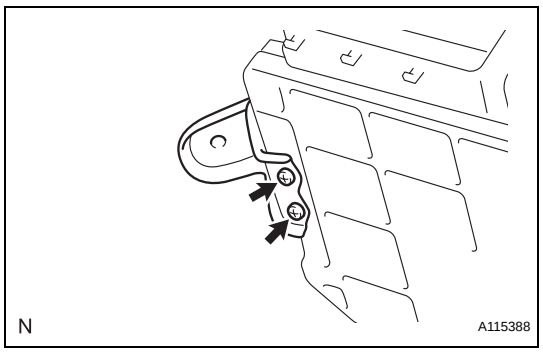

1. INSTALL ECM BRACKET NO. 2

(a) Install ECM bracket No. 2 with the 2 screws.

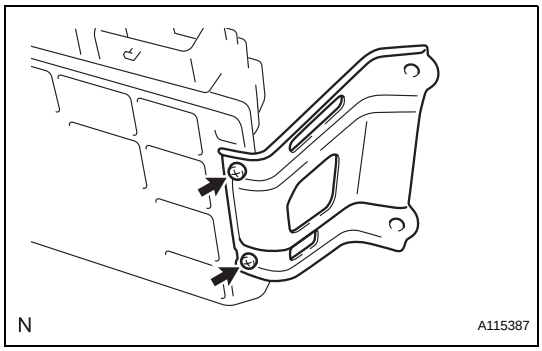

2. INSTALL ECM BRACKET

(a) Install the ECM bracket with the 2 screws.

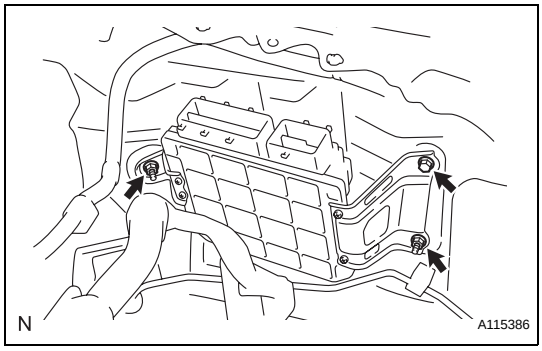

3. INSTALL ECM

(a) Install the ECM with the bolt and 2 nuts.
Torque: 8.0 N*m (82 kgf*cm, 71 in.*lbf)

(b) Connect the 2 ECM connectors.

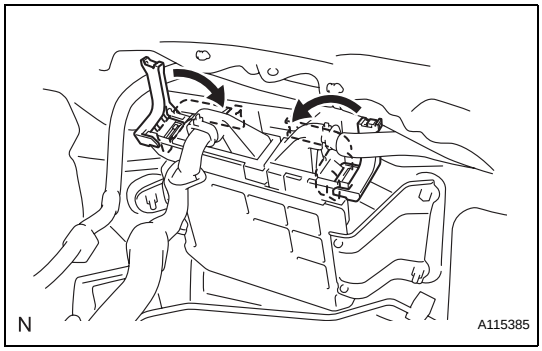

(c) Install the 2 lock knobs and harness clamp.

4. INSTALL COWL TOP PANEL OUTER (for Hatchback) (See page EM-146)

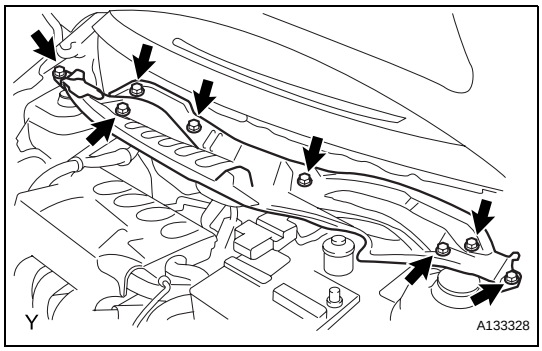

5. INSTALL COWL TOP PANEL OUTER (for Sedan)

(a) Install the cowl top panel outer and install the 8 bolts.
Torque: 6.5 N*m (66 kgf*cm, 58 in.*lbf)

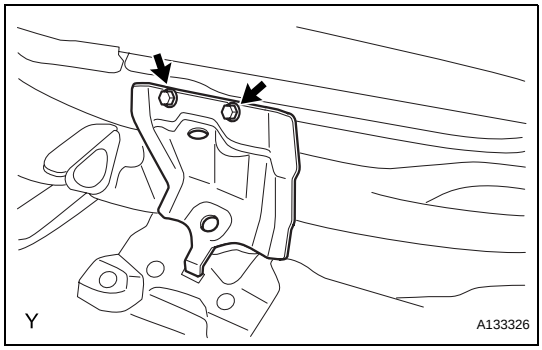

(b) Install the cowl top panel outer center bracket and install the 2 bolts.
Torque: 6.5 N*m (66 kgf*cm, 58 in.*lbf)

ES

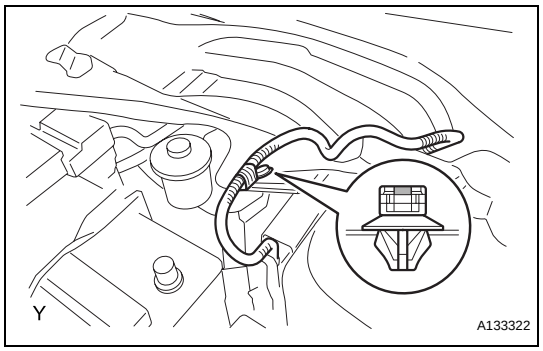

(c) Connect the wire harness and engage the claw.

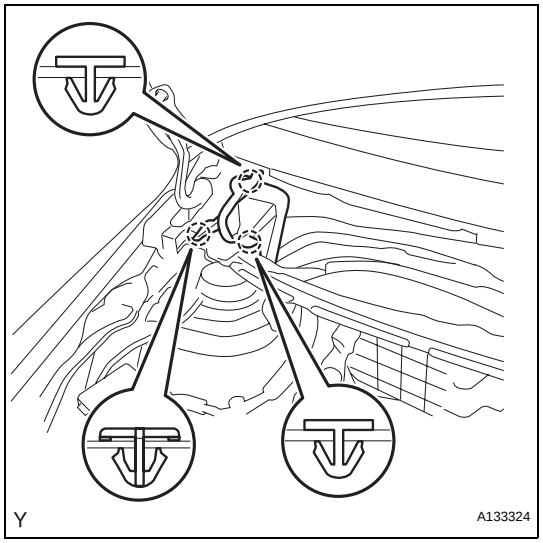

6. INSTALL FRONT AIR SHUTTER SEAL (for Sedan)

(a) Install the front air shutter seal and engage the 3 claws.

7. INSTALL COWL TO REGISTER DUCT SUB-ASSEMBLY NO. 2 (for Hatchback) (See page EM-147)

8. INSTALL WINDSHIELD WIPER MOTOR AND LINK (for Hatchback) (See page WW-21)

9. INSTALL WINDSHIELD WIPER MOTOR AND LINK (for Sedan) (See page WW-12)

10. INSTALL COWL TOP VENTILATOR LOUVER LH (for Hatchback) (See page WW-21)

11. INSTALL COWL TOP VENTILATOR LOUVER SUB-ASSEMBLY (for Hatchback) (See page WW-21)

12. INSTALL COWL TOP VENTILATOR LOUVER SUB-ASSEMBLY (for Sedan) (See page WW-12)

13. INSTALL HOOD TO COWL TOP SEAL (for Hatchback) (See page WW-22)

14. INSTALL COWL SIDE VENTILATOR SUB-ASSEMBLY LH (for Sedan) (See page WW-13)

15. INSTALL COWL SIDE VENTILATOR SUB-ASSEMBLY RH (for Sedan) (See page WW-13)

16. INSTALL FRONT WIPER ARM AND BLADE ASSEMBLY LH (for Hatchback) (See page WW-22)

17. INSTALL FRONT WIPER ARM AND BLADE ASSEMBLY LH (for Sedan) (See page WW-13)

18. INSTALL FRONT WIPER ARM AND BLADE ASSEMBLY RH (for Hatchback) (See page WW-23)

19. INSTALL FRONT WIPER ARM AND BLADE ASSEMBLY RH (for Sedan) (See page WW-14)

20. INSTALL FRONT WIPER ARM HEAD CAP (for Hatchback) (See page WW-23)

21. INSTALL FRONT WIPER ARM HEAD CAP (for Sedan) (See page WW-15)

22. CONNECT CABLE TO NEGATIVE BATTERY TERMINAL
Torque: 5.4 N*m (55 kgf*cm, 48 in.*lbf)

ACCELERATOR PEDAL

COMPONENTS

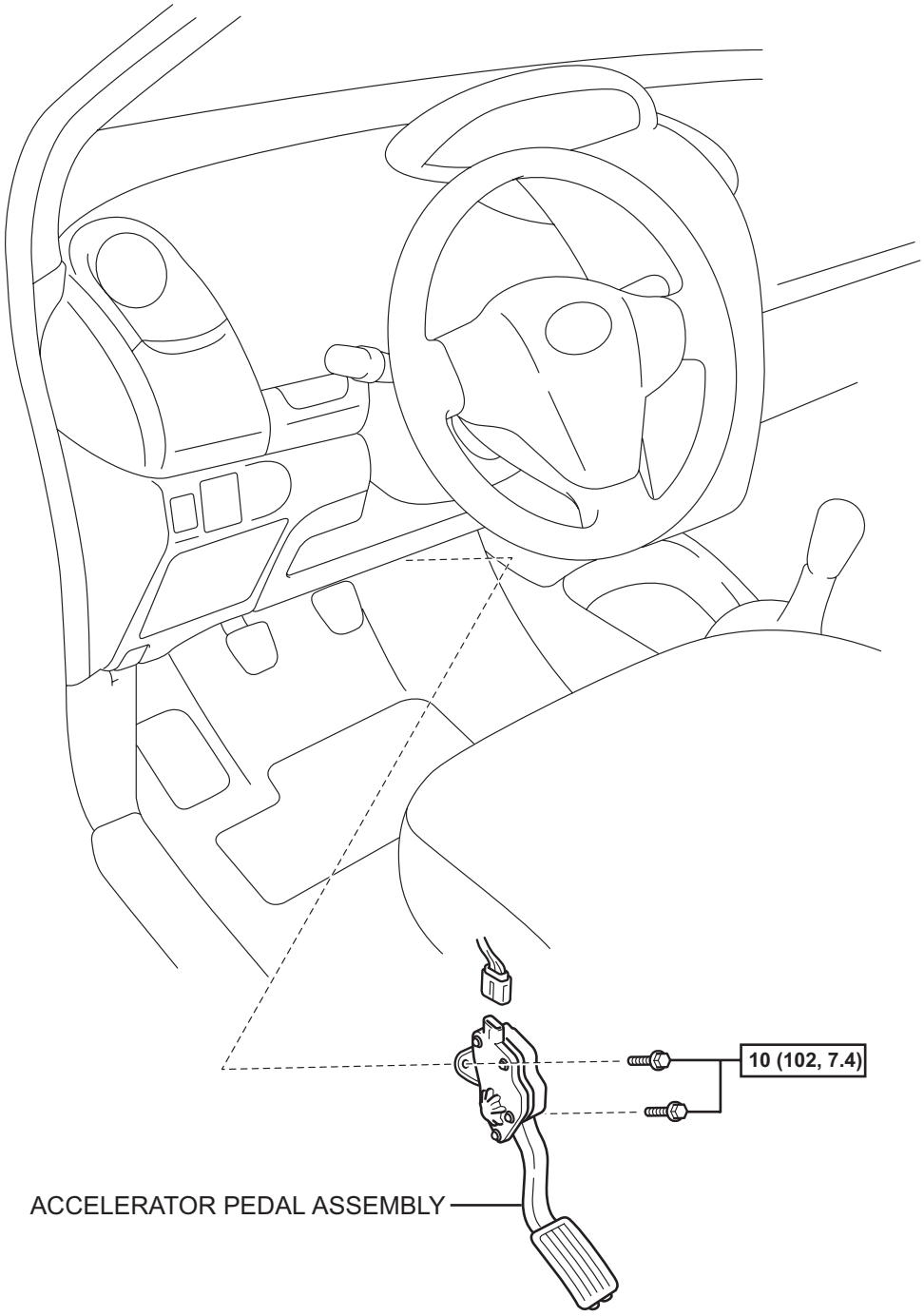

N*m (kgf*cm, ft.*lbf) : Specified torque

N

A115380E04

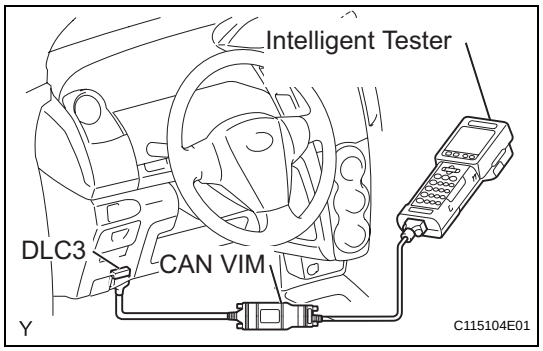

ON-VEHICLE INSPECTION

1. INSPECT ACCELERATOR PEDAL ASSEMBLY

(a) Connect an intelligent tester to the DLC3.

(b) Turn the ignition switch ON and turn the tester ON.

(c) Select the following menu items: Powertrain / Engine and ECT / Data List / Accelerator Pedal Position No. 1 and Accelerator Pedal Position No. 2.

(d) While the accelerator pedal is depressed or released, check that the values of accelerator pedal position No. 1 and accelerator pedal position No. 2 are within the specifications.

Accelerator Pedal Position No. 1 Standard Voltage

Condition	Specified Condition
Accelerator pedal released	0.5 to 1.1 V
Accelerator pedal depressed	2.6 to 4.5 V

Accelerator Pedal Position No. 2 Standard Voltage

Condition	Specified Condition
Accelerator pedal released	1.2 to 2.0 V
Accelerator pedal depressed	3.4 to 5.0 V

HINT:
If the results are not as specified, check the accelerator pedal, wire harness or ECM.

REMOVAL

1. DISCONNECT CABLE FROM NEGATIVE BATTERY TERMINAL

2. REMOVE ACCELERATOR PEDAL ASSEMBLY

(a) Disconnect the accelerator pedal connector.

(b) Remove the 2 bolts and the accelerator pedal.

NOTICE:

- **Do not drop or strike the accelerator pedal.**
- **Do not disassemble the accelerator pedal.**

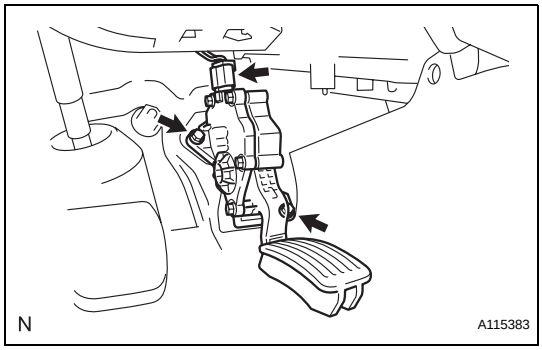

INSTALLATION

NOTICE:

- **Avoid any physical shock to the accelerator pedal.**
- **Do not disassemble the accelerator pedal.**

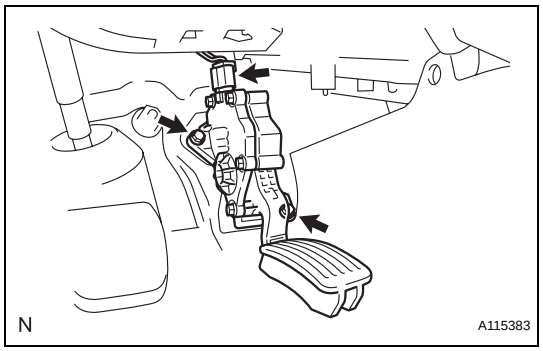

1. INSTALL ACCELERATOR PEDAL ASSEMBLY

(a) Install the accelerator pedal with the 2 bolts.
Torque: 10 N*m (102 kgf*cm, 7.4 ft.*lbf)

(b) Connect the accelerator pedal connector.

2. CONNECT CABLE TO NEGATIVE BATTERY TERMINAL
Torque: 5.4 N*m (55 kgf*cm, 48 in.*lbf)