SECTION EM
ENGINE MECHANICAL

CONTENTS

QR25DE

PRECAUTIONS 5
Precautions for Supplemental Restraint System (SRS) “AIR BAG” and “SEAT BELT PRE-TENSIONER” 5
Precautions for Draining Coolant 5
Precautions for Disconnecting Fuel Piping 5
Precautions for Removal and Disassembly 5
Precautions for Inspection, Repair and Replacement 5
Precautions for Assembly and Installation 5
Parts Requiring Angular Tightening 6
Precautions for Liquid Gasket 6
REMOVAL OF LIQUID GASKET SEALING 6
LIQUID GASKET APPLICATION PROCEDURE..... 6
PREPARATION 8
Special Service Tools 8
Commercial Service Tools 11
NOISE, VIBRATION, AND HARSHNESS (NVH) TROUBLESHOOTING 13
NVH Troubleshooting —Engine Noise 13
Use the Chart Below to Help You Find the Cause of the Symptom. 14
DRIVE BELTS 15
Checking Drive Belts 15
Tension Adjustment 15
Removal and Installation 15
REMOVAL 15
INSTALLATION 16
Removal and Installation of Drive Belt Auto-tensioner 16
REMOVAL 16
INSTALLATION 16
AIR CLEANER AND AIR DUCT 17
Removal and Installation 17
REMOVAL 17
INSTALLATION 17
CHANGING THE AIR CLEANER ELEMENT 18
INTAKE MANIFOLD 19
Removal and Installation 19
REMOVAL 19
INSPECTION AFTER REMOVAL 21
INSTALLATION 21
INSPECTION AFTER INSTALLATION 23
EXHAUST MANIFOLD AND THREE WAY CATALYST 24
Removal and Installation 24
REMOVAL 24
INSPECTION AFTER REMOVAL 25
INSTALLATION 25
OIL PAN AND OIL STRAINER 26
Removal and Installation 26
REMOVAL 26
INSPECTION AFTER REMOVAL 27
INSTALLATION 27
INSPECTION AFTER INSTALLATION 28
IGNITION COIL 29
Removal and Installation 29
REMOVAL 29
INSTALLATION 29
SPARK PLUG 30
Removal and Installation 30
REMOVAL 30
INSPECTION AFTER REMOVAL 30
INSTALLATION 31
FUEL INJECTOR AND FUEL TUBE 32
Removal and Installation 32
REMOVAL 32
INSTALLATION 33
INSPECTION AFTER INSTALLATION 34
ROCKER COVER 35
Removal and Installation 35
REMOVAL 35
INSTALLATION 35
CAMSHAFT 37
Removal and Installation 37
REMOVAL 37
INSPECTION AFTER REMOVAL 39

INSTALLATION 42
INSPECTION AFTER INSTALLATION 44
INSPECTION OF CAMSHAFT SPROCKET (INT) OIL GROOVE 44
Valve Clearance 45
INSPECTION 45
ADJUSTMENT 46
TIMING CHAIN 48
Removal and Installation 48
REMOVAL 49
INSPECTION AFTER REMOVAL 52
INSTALLATION 52
OIL SEAL 56
Removal and installation of Valve Oil Seal 56
REMOVAL 56
INSTALLATION 56
Removal and Installation of Front Oil Seal 57
REMOVAL 57
INSTALLATION 57
Removal and Installation of Rear Oil Seal 58
REMOVAL 58
INSTALLATION 58
CYLINDER HEAD 59
On-Vehicle Service 59
CHECKING COMPRESSION PRESSURE 59
Removal and Installation 61
REMOVAL 62
INSPECTION AFTER REMOVAL 62
INSTALLATION 63
Disassembly and Assembly 64
DISASSEMBLY 64
ASSEMBLY 65
Inspection After Disassembly 66
CYLINDER HEAD DISTORTION 66
VALVE DIMENSIONS 66
VALVE GUIDE CLEARANCE 66
VALVE GUIDE REPLACEMENT 66
VALVE SEAT CONTACT 68
VALVE SEAT REPLACEMENT 68
VALVE SPRING SQUARENESS 69
VALVE SPRING DIMENSIONS AND VALVE SPRING PRESSURE LOAD 69
ENGINE ASSEMBLY 71
Removal and Installation 71
REMOVAL 72
INSTALLATION 73
INSPECTION AFTER INSTALLATION 74
CYLINDER BLOCK 75
Disassembly and Assembly 75
DISASSEMBLY 76
ASSEMBLY 78
How to Select Piston and Bearing 83
DESCRIPTION 83
HOW TO SELECT A PISTON 83
HOW TO SELECT A CONNECTING ROD BEARING 84
HOW TO SELECT A MAIN BEARING 86
Inspection After Disassembly 89
CRANKSHAFT SIDE CLEARANCE 89
CONNECTING ROD SIDE CLEARANCE 90
PISTON AND PISTON PIN CLEARANCE 90
PISTON RING SIDE CLEARANCE 91
PISTON RING END GAP 91
CONNECTING ROD BEND AND TORSION 91
CONNECTING ROD BEARING (BIG END) 92
CONNECTING ROD BUSHING OIL CLEARANCE (SMALL END) 92
CYLINDER BLOCK DISTORTION 93
INNER DIAMETER OF MAIN BEARING HOUSING 93
PISTON TO CYLINDER BORE CLEARANCE 94
OUTER DIAMETER OF CRANKSHAFT JOURNAL 95
OUTER DIAMETER OF CRANKSHAFT PIN 95
OUT-OF-ROUND AND TAPER OF CRANKSHAFT 95
CRANKSHAFT RUNOUT 95
OIL CLEARANCE OF CONNECTING ROD BEARING 96
OIL CLEARANCE OF MAIN BEARING 96
CRUSH HEIGHT OF MAIN BEARING 97
OUTER DIAMETER OF LOWER CYLINDER BLOCK BOLT 97
OUTER DIAMETER OF CONNECTING ROD BOLT 97
MOVEMENT AMOUNT OF FLYWHEEL (M/T MODEL) 97
SERVICE DATA AND SPECIFICATIONS (SDS) 99
Standard and Limit 99
GENERAL SPECIFICATIONS 99
DRIVE BELTS 99
INTAKE MANIFOLD AND EXHAUST MANIFOLD 99
SPARK PLUG 99
CYLINDER HEAD 100
VALVE 100
CAMSHAFT AND CAMSHAFT BEARING 103
CYLINDER BLOCK 104
PISTON, PISTON RING, AND PISTON PIN 105
CONNECTING ROD 105
CRANKSHAFT 106
MAIN BEARING 107
CONNECTING ROD BEARING 108

VQ35DE

PRECAUTIONS 109
Precautions for Supplemental Restraint System (SRS) “AIR BAG” and “SEAT BELT PRE-TENSIONER” 109
Precautions for Drain Coolant 109
Precautions for Disconnecting Fuel Piping 109
Precautions for Removal and Disassembly 109
Precautions for Inspection, Repair and Replacement 109

Precautions for Assembly and Installation 109
Parts Requiring Angular Tightening 110
Precautions for Liquid Gasket 110
REMOVAL OF LIQUID GASKET SEALING 110
LIQUID GASKET APPLICATION PROCEDURE. 110
PREPARATION 112
Special Service Tools 112
Commercial Service Tools 115
NOISE, VIBRATION, AND HARSHNESS (NVH) TROUBLESHOOTING 117
NVH Troubleshooting — Engine Noise 117
Use the Chart Below to Help You Find the Cause of the Symptom. 118
DRIVE BELTS 119
Checking Drive Belts 119
AIR CLEANER AND AIR DUCT 120
Removal and Installation 120
REMOVAL 120
INSTALLATION 120
CHANGING AIR CLEANER ELEMENT 120
INTAKE MANIFOLD COLLECTOR 122
Removal and Installation 122
REMOVAL 123
INSTALLATION 124
EGR VOLUME CONTROL VALVE 126
Removal and Installation 126
REMOVAL 127
INSTALLATION 127
INTAKE MANIFOLD 129
Removal and Installation 129
REMOVAL 130
INSPECTION AFTER REMOVAL 131
INSTALLATION 131
INSPECTION AFTER INSTALLATION 132
EXHAUST MANIFOLD AND THREE WAY CATALYST 134
Removal and Installation 134
REMOVAL 135
INSPECTION AFTER REMOVAL 136
INSTALLATION 136
OIL PAN AND OIL STRAINER 138
Removal and Installation 138
REMOVAL 138
INSPECTION AFTER REMOVAL 141
INSTALLATION 141
INSPECTION AFTER INSTALLATION 143
IGNITION COIL 144
Removal and Installation 144
REMOVAL 144
INSTALLATION 144
SPARK PLUG (PLATINUM-TIPPED TYPE) 145
Removal and Installation 145
REMOVAL 145
INSPECTION AFTER REMOVAL 146
INSTALLATION 146
FUEL INJECTOR AND FUEL TUBE 147
Removal and Installation 147
REMOVAL 147
INSTALLATION 148
INSPECTION AFTER INSTALLATION 149
ROCKER COVER 150
Removal and Installation 150
REMOVAL 150
INSTALLATION 151
FRONT TIMING CHAIN CASE 152
Removal and Installation 152
REMOVAL 153
INSTALLATION 157
TIMING CHAIN 161
Components 161
POSITION FOR APPLYING LIQUID GASKET . 163
Removal 164
Inspection 171
Installation 172
CAMSHAFT 182
Removal and Installation 182
REMOVAL 183
INSTALLATION 184
INSPECTION AFTER REMOVAL 187
Inspection after Installation 190
INSPECTION OF CAMSHAFT SPROCKET (INT) OIL GROOVE 190
Valve Clearance 191
CHECKING 191
VALVE ADJUSTING 194
OIL SEAL 195
Removal and Installation of Valve Oil Seal 195
REMOVAL 195
INSTALLATION 195
Removal and Installation of Front Oil Seal 195
REMOVAL 195
INSTALLATION 197
Removal and Installation of Rear Oil Seal 198
REMOVAL 198
INSTALLATION 198
CYLINDER HEAD 200
On-Vehicle Service 200
CHECKING COMPRESSION PRESSURE 200
Removal and Installation 201
REMOVAL 201
INSTALLATION 204
Disassembly and Assembly 212
DISASSEMBLY 213
ASSEMBLY 213
Inspection After Disassembly 215
CYLINDER HEAD DISTORTION 215
VALVE GUIDE CLEARANCE 215
VALVE GUIDE REPLACEMENT 215
VALVE SEAT CONTACT 217
VALVE SEAT REPLACEMENT 217
VALVE SPRING SQUARENESS 218
VALVE SPRING DIMENSIONS AND VALVE SPRING PRESSURE LOAD 218

ENGINE ASSEMBLY 219
Removal and Installation 219
REMOVAL 220
INSTALLATION 222
INSPECTION AFTER INSTALLATION 222
CYLINDER BLOCK 224
Disassembly and Assembly 224
DISASSEMBLY 225
ASSEMBLY 227
Inspection 234
PISTON AND PISTON PIN CLEARANCE 234
PISTON RING SIDE CLEARANCE 234
PISTON RING END GAP 235
CONNECTING ROD BEND AND TORSION 235
CONNECTING ROD BEARING HOUSING DIAMETER (BIG END) 236
CONNECTING ROD BUSHING OIL CLEARANCE (SMALL END) 236
CYLINDER BLOCK DISTORTION 237
INNER DIAMETER OF MAIN BEARING HOUSING 237
PISTON-TO-CYLINDER BORE CLEARANCE . 237
CRANKSHAFT 239
BEARING CLEARANCE 239
DRIVE PLATE RUNOUT (A/T) 243
FLYWHEEL RUNOUT (M/T) 243
OIL JET 244
OIL JET RELIEF VALVE 244
SERVICE DATA AND SPECIFICATIONS (SDS) ... 245
Standard and Limit 245
GENERAL SPECIFICATIONS 245
DRIVE BELT 246
INTAKE MANIFOLD AND EXHAUST MANIFOLD 246
SPARK PLUG 246
CYLINDER HEAD 247
VALVE 247
CAMSHAFT AND CAMSHAFT BEARING 251
CYLINDER BLOCK 251
PISTON, PISTON RING AND PISTON PIN 252
CONNECTING ROD 253
CRANKSHAFT 254
AVAILABLE MAIN BEARING 255
CONNECTING ROD BEARING 255
MISCELLANEOUS COMPONENTS 256
BEARING CLEARANCE 256

PRECAUTIONS

PFP:00001

Precautions for Supplemental Restraint System (SRS) “AIR BAG” and “SEAT BELT PRE-TENSIONER”

EBS00J49

The Supplemental Restraint System such as “AIR BAG” and “SEAT BELT PRE-TENSIONER”, used along with a front seat belt, helps to reduce the risk or severity of injury to the driver and front passenger for certain types of collision. Information necessary to service the system safely is included in the SRS and SB section of this Service Manual.

WARNING:

- **To avoid rendering the SRS inoperative, which could increase the risk of personal injury or death in the event of a collision which would result in air bag inflation, all maintenance must be performed by an authorized NISSAN/INFINITI dealer.**
- **Improper maintenance, including incorrect removal and installation of the SRS, can lead to personal injury caused by unintentional activation of the system. For removal of Spiral Cable and Air Bag Module, see the SRS section.**
- **Do not use electrical test equipment on any circuit related to the SRS unless instructed to in this Service Manual. SRS wiring harnesses can be identified by yellow and/or orange harnesses or harness connectors.**

Precautions for Draining Coolant

EBS00J4A

- Drain coolant when engine is cooled.

Precautions for Disconnecting Fuel Piping

EBS00J4B

- Before starting work, make sure no fire or spark producing items are in the work area.
- Release fuel pressure before any removal or disassembly.
- After disconnecting pipes, plug openings to stop fuel leakage.

Precautions for Removal and Disassembly

EBS00J4C

- When instructed to use special service tools, use the specified tools. Always be careful to work safely, avoid forceful operations.
- Use maximum care to avoid damage to mating or sliding surfaces.
- Cover openings of engine system with tape or equivalent, if necessary, to seal out foreign materials.
- Mark and arrange disassembly parts in an organized way for easy troubleshooting and assembly.
- When loosening nuts and bolts, as a basic rule, start with the one furthest outside, then the one diagonally opposite, and so on. If the order of loosening is specified, follow the specifications.

Precautions for Inspection, Repair and Replacement

EBS00J4D

- Before repairing or replacing, thoroughly inspect parts. Inspect new replacement parts in the same way, and replace if necessary.

Precautions for Assembly and Installation

EBS00J4E

- Use torque wrench to tighten bolts or nuts.
- When tightening nuts and bolts, as a basic rule, equally tighten in several different steps starting with the ones in center, then ones on inside and outside diagonally in this order. If the order of tightening is specified, follow the specifications.
- Always replace the old with a new gasket, packing, oil seal or O-ring.
- Thoroughly wash, clean, and air-blow each part. Carefully check oil or coolant passages for any restriction and blockage.
- Avoid damaging sliding or mating surfaces. Completely remove foreign materials such as cloth lint or dust. Before assembly, oil sliding surfaces well.
- Bleed the air trapped within the system after draining the coolant.
- Before starting engine, apply fuel pressure to fuel lines with turning ignition switch ON (with engine stopped). Then make sure that there are no leaks at fuel line connections.
- After repairing, start engine and increase engine speed to check coolant, fuel, oil, and exhaust systems for leakage or rattles.

Parts Requiring Angular Tightening

EBS00J4F

- Use an angle wrench for the final tightening of the following engine parts.
  - Cylinder head bolts
  - Lower cylinder block bolts
  - Connecting rod cap bolts
  - Crankshaft pulley bolt (No angle wrench is required as the bolt flange is provided with notches for angular tightening)
- Do not use a torque value for final tightening.
- The torque value for these parts are for a preliminary step.
- Ensure thread and seat surfaces are clean and coated with engine oil.

Precautions for Liquid Gasket

EBS00J4G

REMOVAL OF LIQUID GASKET SEALING

- After removing the bolts and nuts, separate the mating surface and remove the sealant using Tool.

  Tool number : KV10111100 (J-37228)

  CAUTION:
  Be careful not to damage the mating surfaces.
- In areas where the cutter is difficult to use, use a plastic hammer to lightly tap (1) the cutter where the RTV Silicone Sealant is applied. Use a plastic hammer to slide the cutter (2) by tapping on the side.

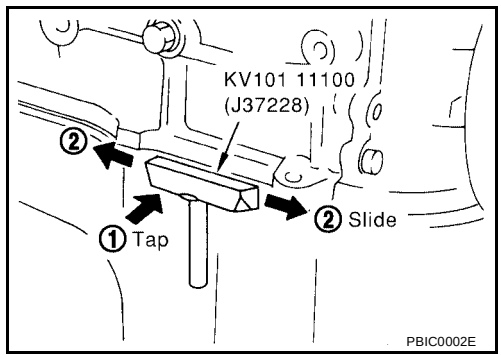

CAUTION:
If for some unavoidable reason a tool such as a flat-bladed screwdriver is used, be careful not to damage the mating surfaces.

LIQUID GASKET APPLICATION PROCEDURE

1. Using a scraper, remove the old Silicone RTV Sealant adhering to the gasket application surface and the mating surface.
   - Remove the sealant completely from the groove of the gasket application surface, mounting bolts, and bolt holes.
2. Thoroughly clean the gasket application surface and the mating surface and remove adhering moisture, grease and foreign materials.
3. Attach the sealant tube to the tube presser.
   Use Genuine Silicone RTV Sealant or equivalent. Refer to GI-45, "RECOMMENDED CHEMICAL PRODUCTS AND SEALANTS" .

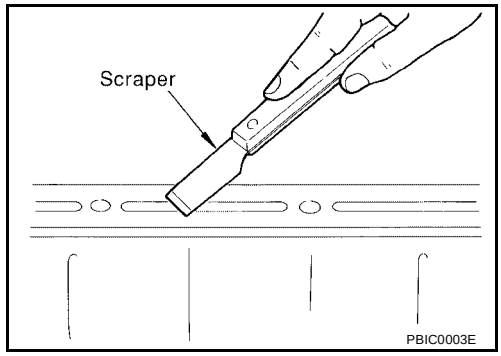

4. Apply the sealant using Tool without breaks to the specified location.

   Tube presser WS39930000 (–)

   - If there is a groove for the sealant application, apply the sealant to the groove.
   - As for the bolt holes, normally apply the sealant inside the holes. If specified, it should be applied outside the holes. Make sure to read the text of this manual.
   - Within five minutes of the sealant application, install the mating component.
   - If the sealant protrudes, wipe it off immediately.
   - Do not retighten after the installation.

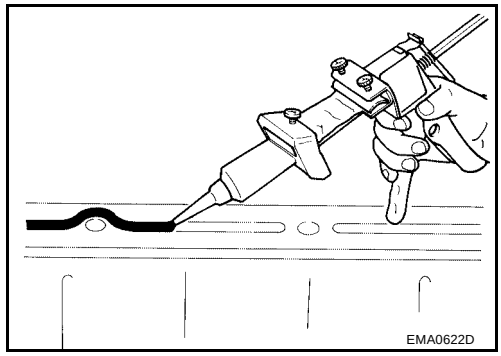

- After 30 minutes or more have passed from the installation, fill the engine with the specified oil and coolant. Refer to MA-12, "RECOMMENDED FLUIDS AND LUBRICANTS" .

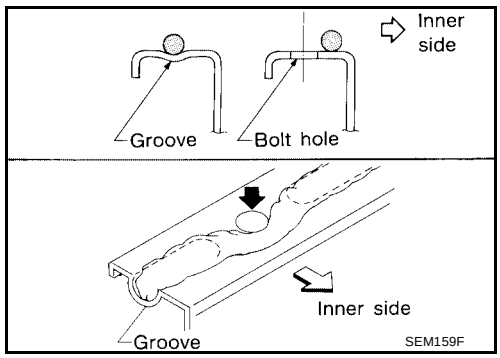

CAUTION:
Follow all specific instructions in this manual.

PREPARATION

PFP:00002

Special Service Tools

EBS00J4H

The actual shapes of the Kent-Moore tools may differ from those of the special service tools illustrated here.

Tool number (Kent-Moore No.) Tool name		Description
KV10111100 (J-37228) Seal cutter	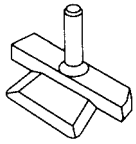 S-NT046	Removing steel oil pan and rear timing chain case
ST0501S000 Engine stand assembly 1. ST05011000 (—) Engine stand 2. ST05012000 (—) Base	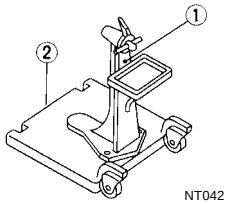 NT042	Disassembling and assembling
KV10106500 (—) Engine stand shaft	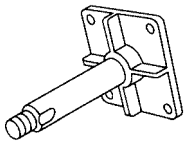 NT028	
KV10115300 (—) Engine sub-attachment	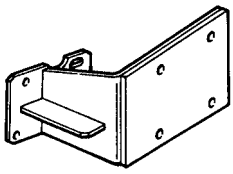 ZZA1078D	
KV10116200 (J-26336-B) Valve spring compressor 1. KV10115900 (J-26336-20) Attachment	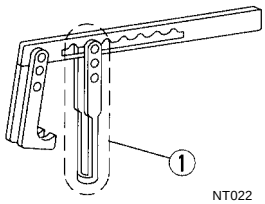 NT022	Disassembling valve mechanism
KV10112100 (BT-8653-A) Angle wrench	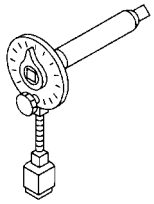 S-NT014	Tightening bolts for bearing cap, cylinder head, etc.
KV10107902 (J-38959) Valve oil seal puller	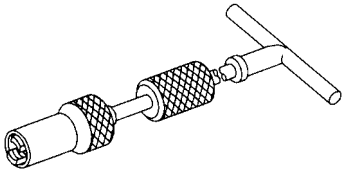 S-NT011	Removing valve oil seal

Tool number (Kent-Moore No.) Tool name	Description
KV10115600 (J-38958) Valve oil seal drift 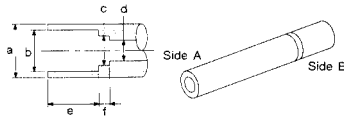 S-NT603	Installing valve oil seal **Use side A.** **a: 20 (0.79) dia.** **d: 8 (0.31) dia.** **b: 13 (0.51) dia.** **e: 10.7 (0.421) dia.** **c: 10.3 (0.406) dia.** **f: 5 (0.20) dia.** Unit: mm (in)
EM03470000 (J-8037) Piston ring compressor 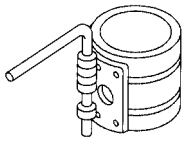 S-NT044	Installing piston assembly into cylinder bore
ST16610001 (J-23907) Pilot bushing puller 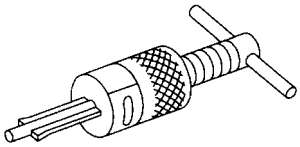 S-NT045	Removing crankshaft pilot bushing
WS39930000 (—) Tube presser 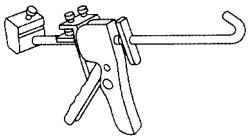 S-NT052	Pressing the tube of liquid gasket
16441 6N210 (J-45488) Quick connector release 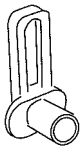 PBIC0198E	Removing fuel tube quick connectors in engine room (Available in SEC. 164 of PARTS CATALOG: Part No. 16441 6N210)
KV10114400 (J-38365) Heated oxygen sensor wrench 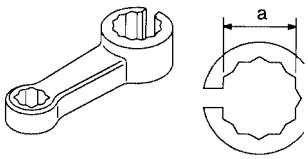 NT636	Loosening or tightening rear heated oxygen sensor **a: 22 mm (0.87 in)**
KV10117100 (J-36471-A) Heated oxygen sensor wrench 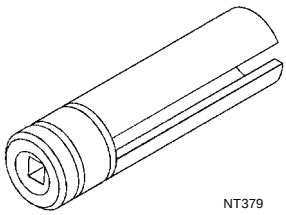 NT379	Loosening or tightening heated oxygen sensor **For 22 mm (0.87 in) hexagon nut**

Tool number (Kent-Moore No.) Tool name		Description
— (J-44626) Air fuel ratio (A/F) sensor wrench	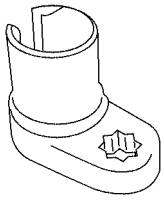 LEM054	Loosening or tightening air fuel ratio (A/F) sensor 1
— (J-46535) Drive belt tension releaser	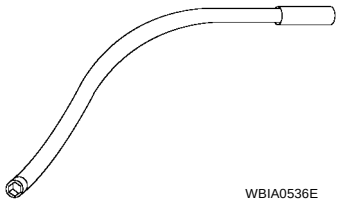 WBIA0536E	Releasing drive belt tension

Commercial Service Tools

EBS00J4I

Tool number (Kent-Moore No.) Tool name	Description
Pulley holder 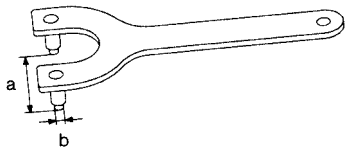 NT628	Crankshaft pulley removing and installing **a: 68 mm (2.68 in) dia.** **b: 8 mm (0.31 in) dia.**
Crank puller 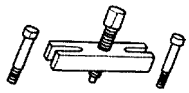 ZZA0010D	Crankshaft pulley removing
Spark plug wrench 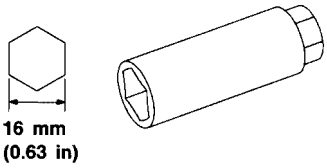 S-NT047	Removing and installing spark plug
Valve seat cutter set 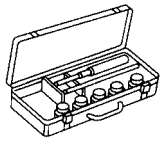 S-NT048	Finishing valve seat dimensions
Piston ring expander 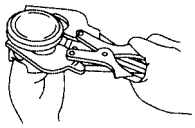 S-NT030	Removing and installing piston ring
Valve guide drift 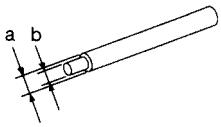 S-NT015	Removing and installing valve guide **Intake & Exhaust:** **a: 9.5 mm (0.374 in) dia.** **b: 5.5 mm (0.217 in) dia.**
Valve guide reamer 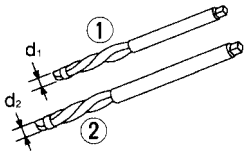 S-NT016	1: Reaming valve guide inner hole 2: Reaming hole for oversize valve guide **Intake & Exhaust:** **d_1 : 6.0 mm (0.236 in) dia.** **d_2 : 10.2 mm (0.402 in) dia.**

Tool number (Kent-Moore No.) Tool name		Description
(J-43897-18) (J-43897-12) Oxygen sensor thread cleaner	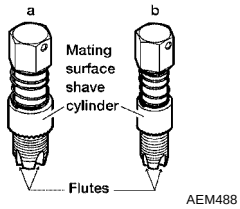	Reconditioning the exhaust system threads before installing a new heated oxygen sensor (Use with anti-seize lubricant shown below.) **a: J-43897-18 [18 mm (0.71 in) dia.] for zirconia heated oxygen sensor** **b: J-43897-12 [12 mm (0.47 in) dia.] for titania heated oxygen sensor**
Anti-seize lubricant (Permatex 133AR or equivalent meeting MIL specification MIL-A-907)		Lubricating oxygen sensor thread cleaning tool when reconditioning exhaust system threads
Power tool	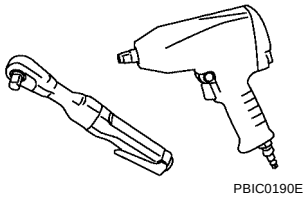	Loosening bolts and nuts
TP55 Torx® plus Bit	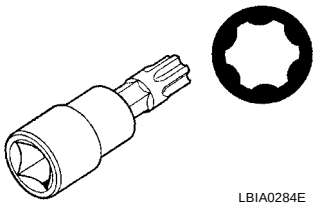	Removing and installing M/T flywheel bolts
E20 Torx® Socket (J-45816)	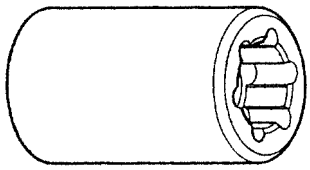	Removing and installing A/T drive plate bolts

NOISE, VIBRATION, AND HARSHNESS (NVH) TROUBLESHOOTING

PFP:00003

NVH Troubleshooting —Engine Noise

EBS00J4J

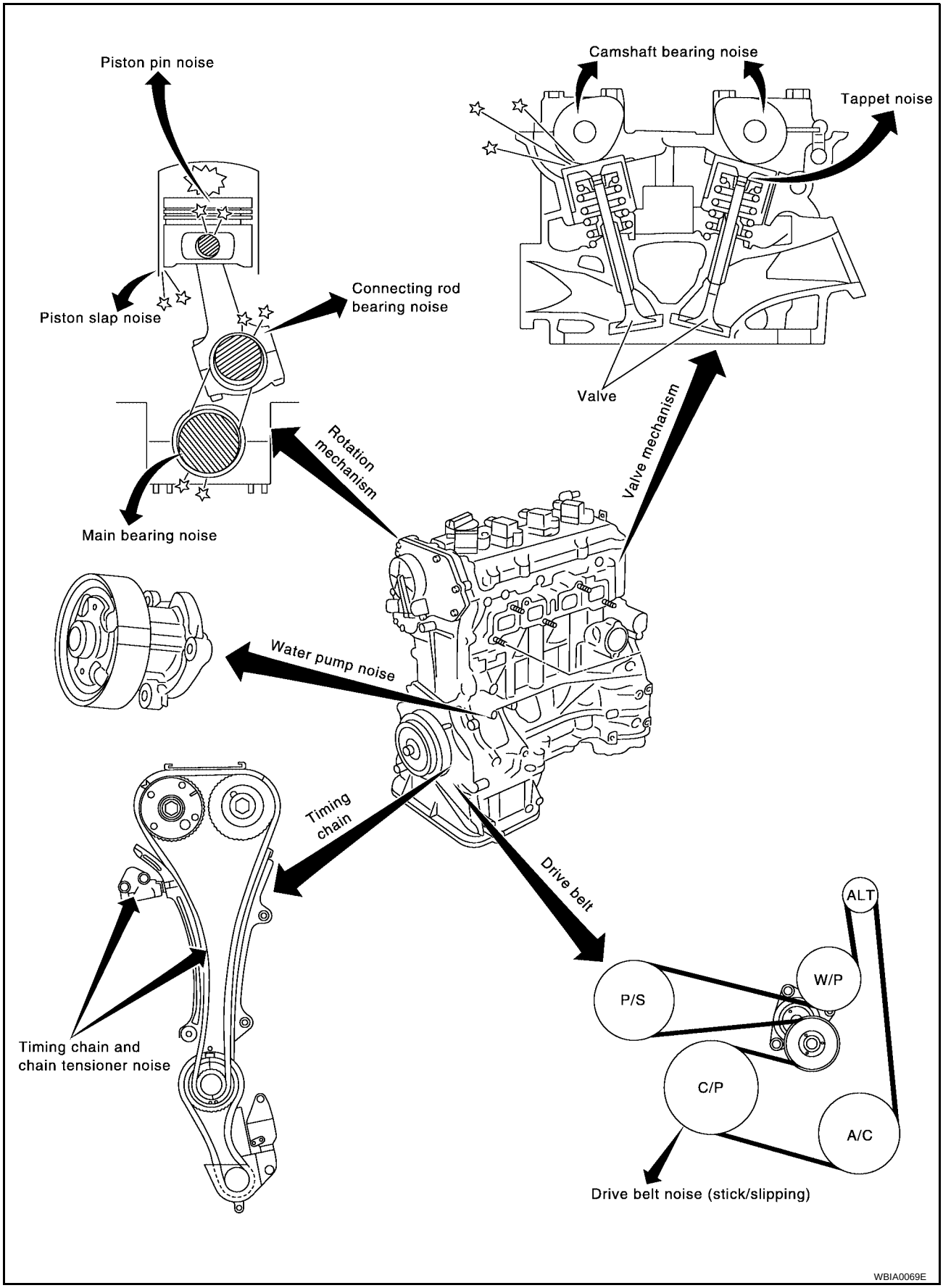

Use the Chart Below to Help You Find the Cause of the Symptom.

EBS00J4K

1. Locate the area where noise occurs.
2. Confirm the type of noise.
3. Specify the operating condition of engine.
4. Check specified noise source.

If necessary, repair or replace these parts.

Location of noise	Type of noise	Operating condition of engine						Source of noise	Check item	Reference page
		Before warm-up	After warm-up	When starting	When idling	When racing	While driving			
Top of engine Rocker cover Cylinder head	Ticking or clicking	C	A	—	A	B	—	Tappet noise	Valve clearance	EM-45
	Rattle	C	A	—	A	B	C	Camshaft bearing noise	Camshaft journal clearance Camshaft runout	EM-40 EM-39
Crankshaft pulley Cylinder block (Side of engine) Oil pan	Slap or knock	—	A	—	B	B	—	Piston pin noise	Piston and piston pin clearance Connecting rod bushing clearance	EM-92 EM-92
	Slap or rap	A	—	—	B	B	A	Piston slap noise	Piston-to-bore clearance Piston ring side clearance Piston ring end gap Connecting rod bend and torsion	EM-91 EM-91 EM-91 EM-91
	Knock	A	B	C	B	B	B	Connecting rod bearing noise	Connecting rod bushing clearance (Small end) Connecting rod bearing clearance (Big end)	EM-92 EM-92
	Knock	A	B	—	A	B	C	Main bearing noise	Main bearing oil clearance Crankshaft runout	EM-96 EM-95
Front of engine Timing chain cover	Tapping or ticking	A	A	—	B	B	B	Timing chain and chain tensioner noise	Timing chain cracks and wear Timing chain tensioner operation	EM-48
Front of engine	Squeaking or fizzing	A	B	—	B	—	B	Drive belts (Sticking or slipping)	Drive belts deflection	EM-15
	Creaking	A	B	A	B	A	B	Drive belts (Slipping)	Idler pulley bearing operation	
	Squall Creak	A	B	—	B	A	B	Water pump noise	Water pump operation	CO-7

A: Closely related B: Related C: Sometimes related —: Not related

DRIVE BELTS

PFP:02117

Checking Drive Belts

EBS00J4L

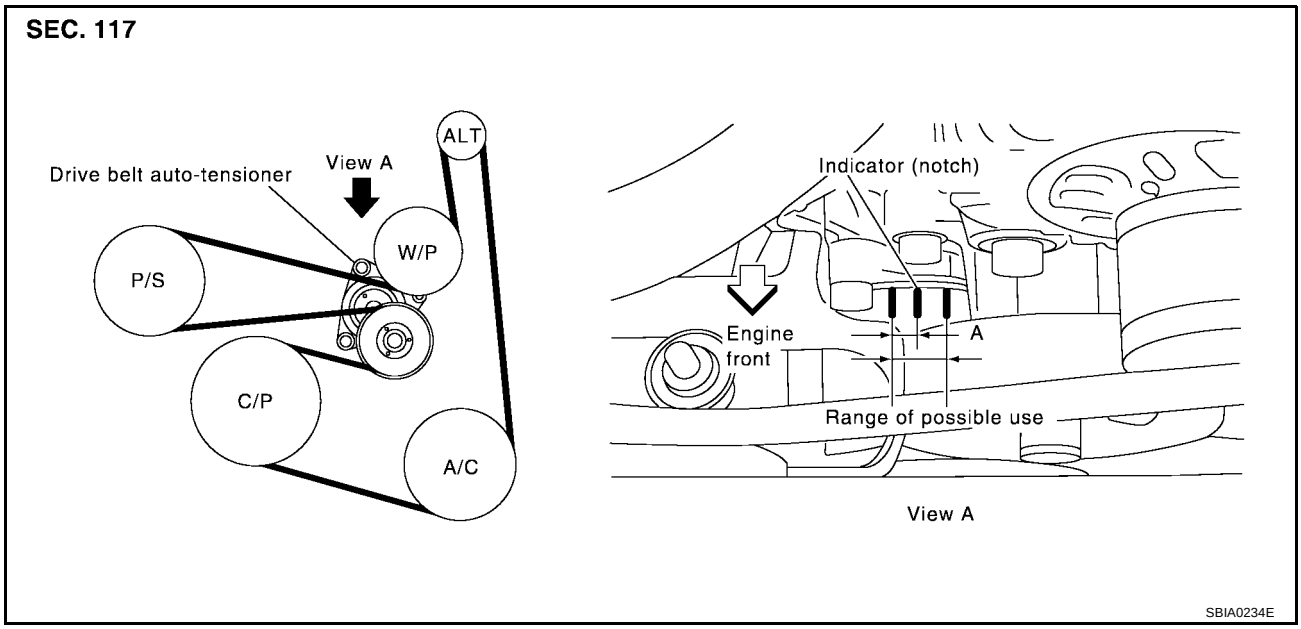

WARNING:
Inspect the drive belt only when the engine is stopped.

NOTE:
On vehicles not equipped with A/C, there is an idler pulley in the position for the drive belt routing.

- Make sure that the stamp mark of drive belt auto-tensioner is within the usable range.

  NOTE:
  - Check the drive belt auto-tensioner indicator (notch) when the engine is cold.
  - When the new drive belt is installed, the range should be “A” as shown.
  - Visually check entire belt for wear, damage or cracks.
  - If the indicator is out of allowable use range or belt is damaged, replace the belt.

Tension Adjustment

EBS00J4M

- Belt tension is not manually adjustable, it is automatically adjusted by the drive belt auto-tensioner.

Removal and Installation

EBS00J4N

REMOVAL

1. While securely holding the hexagonal part in pulley center of drive belt auto-tensioner, move in the direction of arrow (loosening direction of tensioner) using Tool.

   Tool number : — (J-46535)

   CAUTION:
   - **Avoid placing hand in a location where pinching may occur if the holding tool accidentally comes off.**
   - **Do not loosen the auto-tensioner pulley bolt. (Do not turn it counterclockwise.) If turned counterclockwise, the complete auto-tensioner must be replaced as a unit, including pulley.**

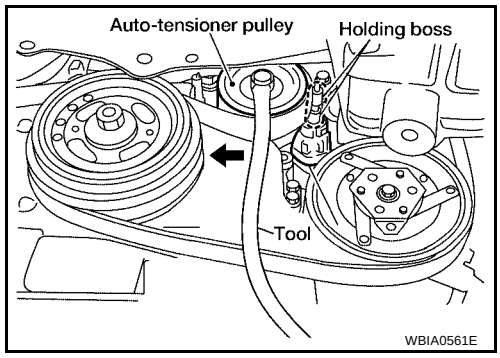

2. Insert a rod approximately 6 mm (0.24 in) in diameter through the rear of tensioner into retaining boss to lock tensioner pulley.

- Leave tensioner pulley arm locked until belt is installed again.

3. Loosen auxiliary drive belt from water pump pulley in sequence, and remove it.

INSTALLATION

1. Hook the auxiliary drive belt onto all of the pulleys except for the water pump pulley. Hook the drive belt onto water pump pulley last.

CAUTION:
Confirm belts are completely set on the pulleys.

2. Release tensioner, and apply tensions to belt.

   CAUTION:
   - **Avoid placing hand in a location where pinching may occur if the holding tool accidentally comes off.**
   - **Do not loosen the auto-tensioner pulley bolt. (Don't turn it counterclockwise. If turned counter-clockwise, the complete auto-tensioner must be replaced as a unit, including pulley.**

3. Turn crankshaft pulley clockwise several times to equalize tension between each pulley.
4. Confirm tensions of belt at indicator is within the allowable use range. Refer to EM-15, "Checking Drive Belts" .

Removal and Installation of Drive Belt Auto-tensioner

EBS00J4O

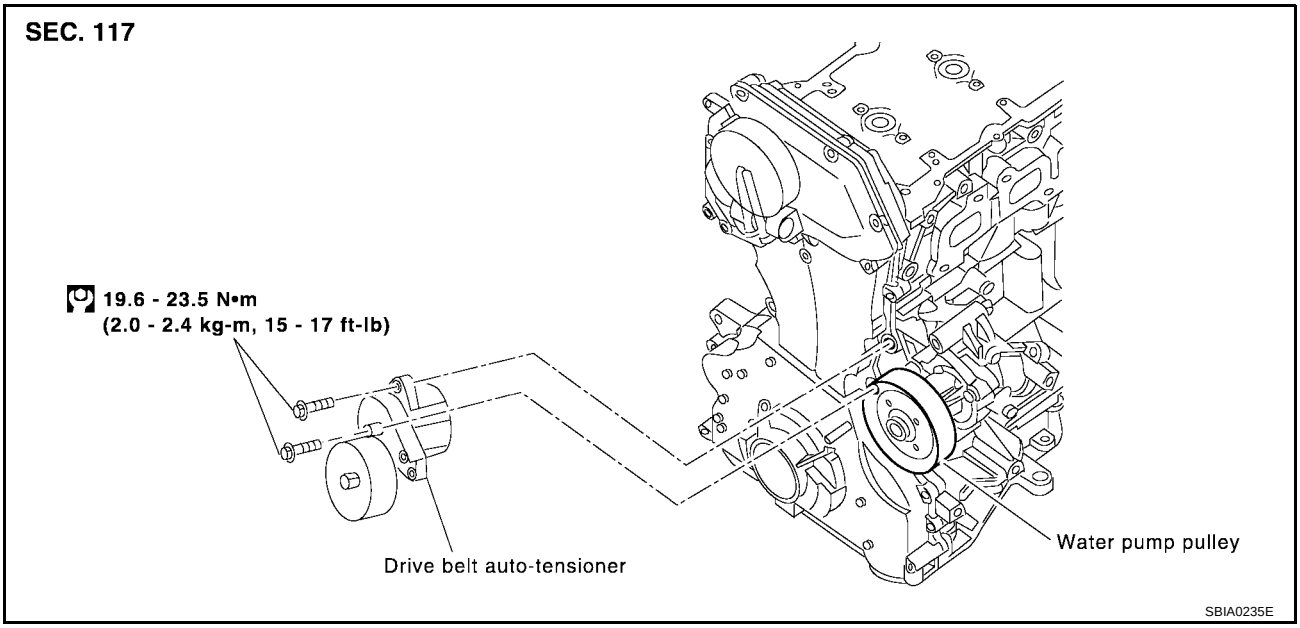

REMOVAL

CAUTION:
The complete auto-tensioner must be replaced as a unit, including the pulley.

1. Remove the front RH engine cover.
2. Remove the drive belt EM-15, "Removal and Installation" .
   - Insert a rod approximately 6 mm (0.24 in) in diameter through the rear of tensioner into the retaining boss to lock tensioner pulley.
3. Remove the generator. Refer to SC-28, "Removal and Installation" .
4. Remove the drive belt auto-tensioner, with power tool.

CAUTION:
Do not loosen the auto-tensioner pulley bolt. (Don't turn it counterclockwise. If turned counterclock-wise, the complete auto-tensioner must be replaced as a unit, including pulley.

INSTALLATION

Installation is in the reverse order of removal.

CAUTION:
- **If there is damage greater than peeled paint, replace drive belt auto-tensioner units**
- **Install the drive belt auto-tensioner carefully so not to damage the water pump pulley.**
- **Do not swap the pulley between the new and old auto-tensioner units**

AIR CLEANER AND AIR DUCT

PFP:16500

Removal and Installation

EBS00J4P

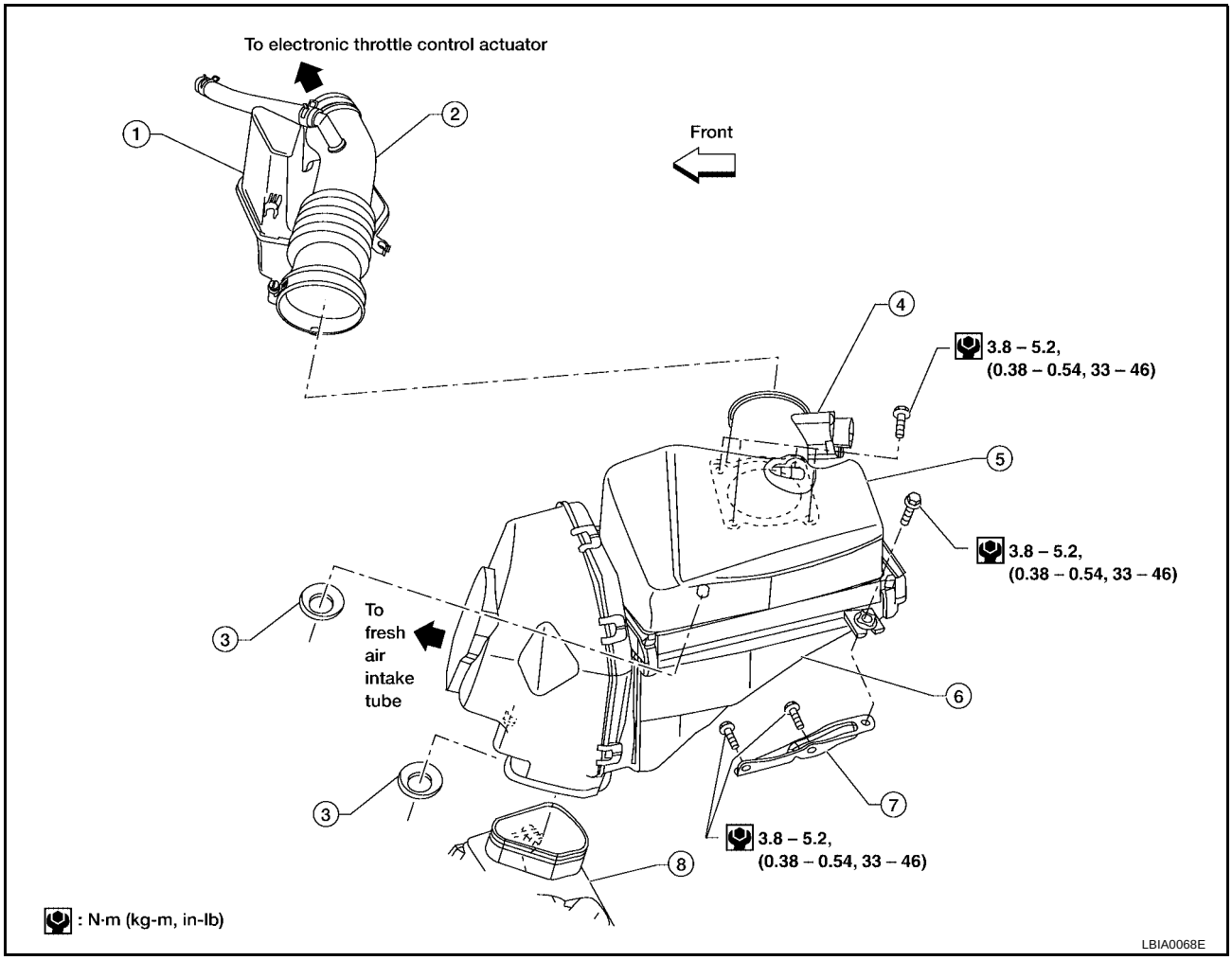

1. Resonator	2. Air cleaner to electronic throttle control actuator tube	3. Grommet
4. Mass air flow sensor	5. Air cleaner case (upper)	6. Air cleaner case (lower)
7. Air cleaner case mounting bracket	8. Resonator in fender	

REMOVAL

1. Disconnect the mass air flow sensor electrical connector.
2. Disconnect the tube clamp at the electronic throttle control actuator and the fresh air intake tube.
3. Remove air cleaner to electronic throttle control actuator tube, air cleaner case (upper), with mass air flow sensor attached.
4. Remove mass air flow sensor from air cleaner case (upper), as necessary.

   CAUTION:
   Handle the mass air flow sensor with care:
   - **Do not shock it.**
   - **Do not disassemble it.**
   - **Do not touch the internal sensor.**
5. Remove the resonator in the fender, as necessary.

INSTALLATION

Installation is in the reverse order of removal.

CHANGING THE AIR CLEANER ELEMENT

1. Unhook the air cleaner case side clips and raise the air cleaner case (upper).
2. Remove the air cleaner element.
3. Install a new air cleaner element.
4. Installation is in the reverse order of removal.

INTAKE MANIFOLD

PFP:14003

Removal and Installation

EBS00J4Q

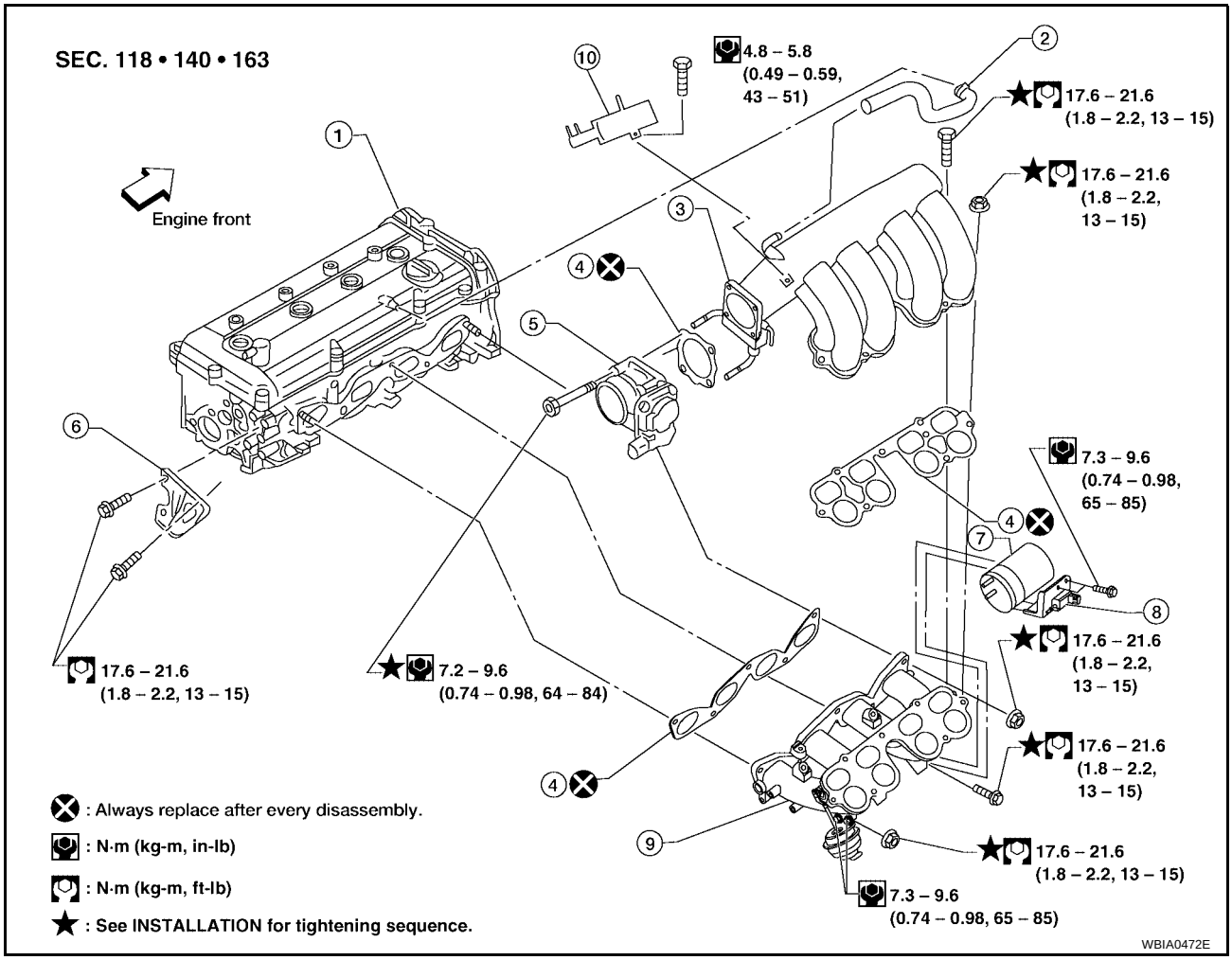

1. Cylinder head assembly
2. PCV hose
3. Intake manifold collector
4. Gasket
5. Electric throttle control actuator
6. Intake manifold support
7. Vacuum reservoir tank
8. VIAS control solenoid valve
9. Intake manifold
10. EVAP canister purge volume control solenoid

REMOVAL

WARNING:

To avoid the danger of being scalded, never drain the coolant when the engine is hot.

1. Release the fuel pressure. Refer to EC-84, "FUEL PRESSURE RELEASE" .
2. Drain coolant when engine is cooled. Refer to CO-10, "Changing Engine Coolant" .
3. Disconnect the MAF sensor electrical connector.
4. Remove air cleaner case and air duct assembly. Refer to EM-17, "Removal and Installation" .
5. Disconnect the following components at the intake side:
   - PCV hose
   - EVAP canister purge volume control solenoid
   - Electric throttle control actuator
   - Brake booster vacuum hose

6. Disconnect the fuel quick connector on the engine side.
   - Using Tool perform the following steps to disconnect the quick connector.

     Tool number : — (J-45488)

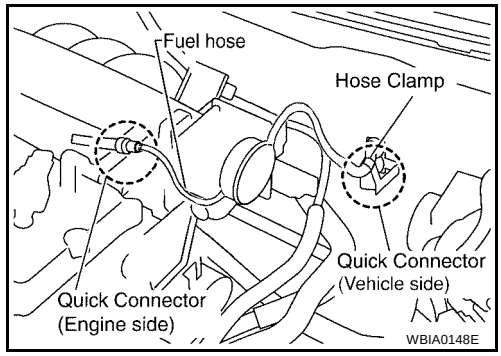

a. Remove quick connector cap.

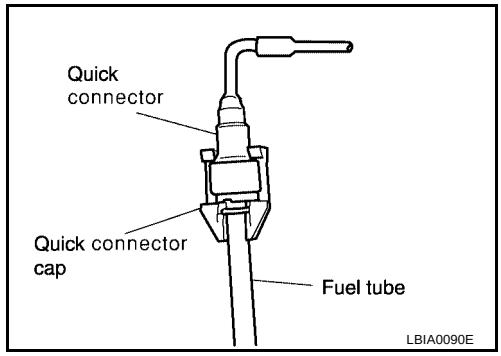

b. With the sleeve side of Tool facing quick connector, install Tool onto fuel tube.
c. Insert Tool into quick connector until sleeve contacts and goes no further. Hold the Tool on that position.

   CAUTION:
   Inserting the Tool hard will not disconnect quick connector. Hold Tool where it contacts and goes no further.

d. Pull the quick connector straight out from the fuel tube.

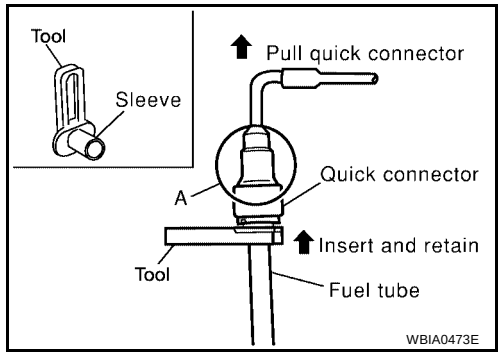

   CAUTION:
   - **Pull quick connector holding it at the "A" position, as shown.**
   - **Do not pull with lateral force applied. O-ring inside quick connector may be damaged.**
   - **Prepare container and cloth beforehand as fuel will leak out.**
   - **Avoid fire and sparks.**
   - **Be sure to cover openings of disconnected pipes with plug or plastic bag to avoid fuel leakage and entry of foreign materials.**

7. When removing fuel hose quick connector at vehicle piping side, perform as follows.

a. Remove quick connector cap.
b. Hold the sides of the connector, push in tabs and pull out the tube. (The figure is shown for reference only.)
   - If the connector and the tube are stuck together, push and pull several times until they start to move. Then disconnect them by pulling.

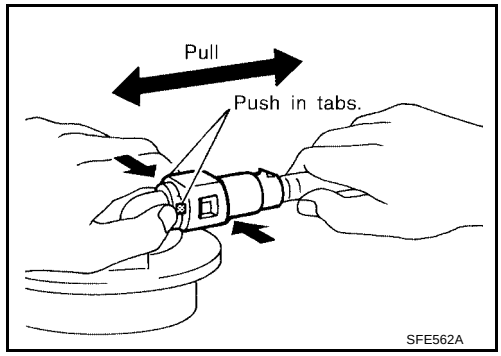

   CAUTION:
   - **The tube can be removed when the tabs are completely depressed. Do not twist it more than necessary.**
   - **Do not use any tools to remove the quick connector.**
   - **Keep the resin tube away from heat. Be especially careful when welding near the tube.**
   - **Prevent acid liquid such as battery electrolyte etc. from getting on the resin tube.**
   - **Do not bend or twist the tube during installation and removal.**

- **Do not remove the remaining retainer on tube.**
- **When the tube is replaced, also replace the retainer with a new one.**
  Retainer color: Green.
- **To keep clean the connecting portion and to avoid damage and foreign materials, cover them completely with plastic bags or something similar.**

8. Loosen mounting bolts diagonally, and remove the electric throttle control actuator.

   CAUTION:
   Handle carefully to avoid any damage.

9. Disconnect intake manifold collector harness, and vacuum hose.

   CAUTION:
   Cover engine openings to avoid entry of foreign materials.

10. Remove intake manifold collector mounting bolts on the support, using power tools.
11. Loosen the mounting bolts and nuts in the order shown to remove the intake manifold collector, using power tools.

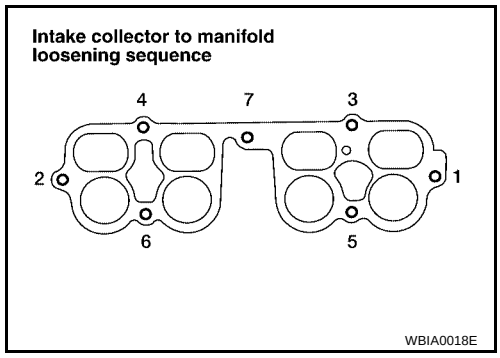

12. Loosen the bolts in the order shown to remove the intake manifold assembly, using power tools.

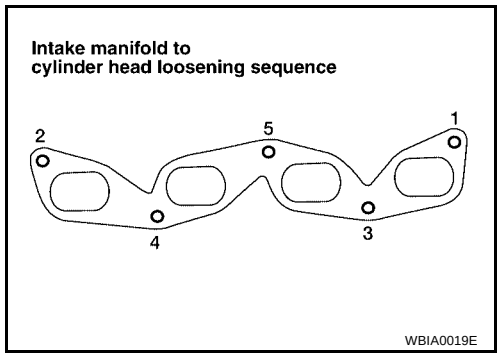

INSPECTION AFTER REMOVAL

Surface Distortion

- Using straightedge and feeler gauge, inspect surface distortion of intake manifold collector and intake manifold surface.

  Standard : 0.1 mm (0.004 in)

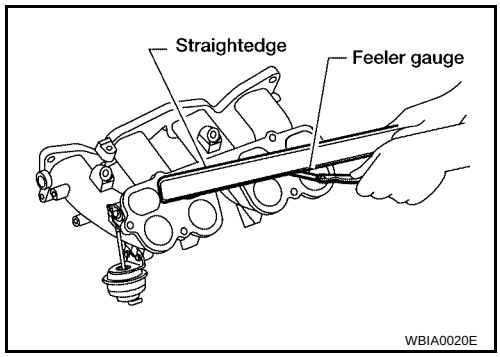

INSTALLATION

- Install the intake manifold bolts and nuts in the reverse order of removal, following the tightening sequences below.

Tightening Intake Manifold Bolts and Nuts

- Tighten in numerical order as shown.

CAUTION:

After tightening No.5, retighten the No.1 mounting bolt to specification.

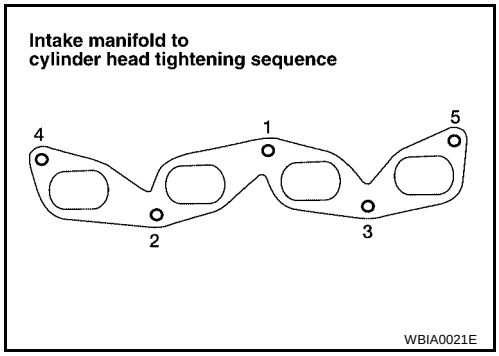

Tightening Intake Manifold Collector Bolts and Nuts

- Tighten in numerical order as shown.

CAUTION:

After tightening No.7, retighten the No.1 mounting bolt to specification.

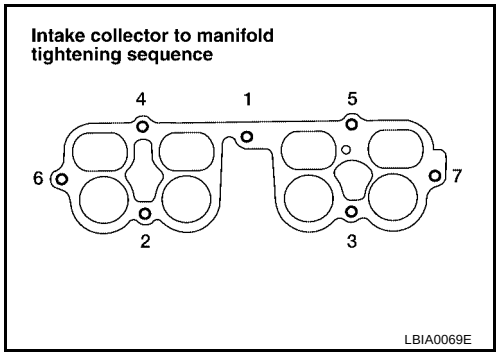

Installation of Electric Throttle Control Actuator:

- Tighten the mounting bolts of electric throttle control actuator equally and diagonally in several steps.
- After installation perform procedure in EM-23, "INSPECTION AFTER INSTALLATION" .

CONNECTING QUICK CONNECTOR ON THE FUEL HOSE (ENGINE SIDE)

1. Make sure no foreign substances are deposited in and around the fuel tube and quick connector, and there is no damage to them.
2. Thinly apply new engine oil around the fuel tube tip end.
3. Align center to insert quick connector straight into fuel tube.
   - Insert fuel tube into quick connector until the top spool on fuel tubes is inserted completely and the second level spool is positioned slightly below the quick connector bottom end.

   CAUTION:
   - **Hold at position "A" as shown, when inserting the fuel tube into the quick connector.**
   - **Carefully align to center to avoid inclined insertion to prevent damage to the O-ring inside the quick connector.**
   - **Insert the fuel tube until you hear a “click” sound and actually feel the engagement.**
   - **To avoid misidentification of engagement with a similar sound, be sure to perform the next step.**

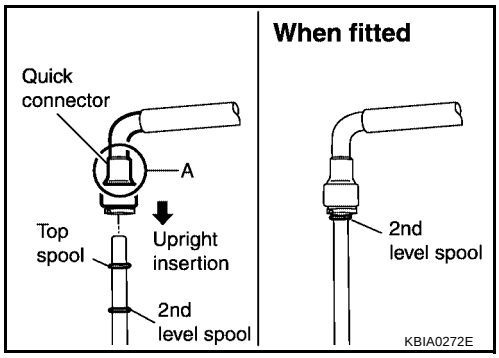

4. Before clamping the fuel hose with the hose clamp, pull the quick connector hard by hand, holding at the "A" position, as shown. Make sure it is completely engaged (connected) so that it does not come off of the fuel tube.

   NOTE:
   Recommended pulling force is 50 N (5.1 kg, 11.2 lb).

5. Install quick connector cap on quick connector joint.
   - Direct arrow mark on quick connector cap to upper side (fuel hose side).
6. Install fuel hose to hose clamp.

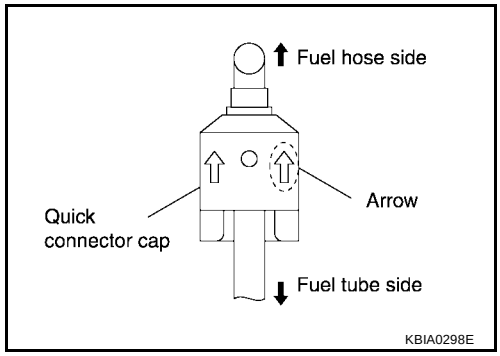

CONNECTING QUICK CONNECTOR ON THE FUEL HOSE (VEHICLE PIPING SIDE)

1. Make sure no foreign substances are deposited in and around the fuel tube and quick connector, and there is no damage to them.
2. Align center to insert quick connector straight into fuel tube.
   - Insert fuel tube until a click is heard.
   - Install quick connector cap on quick connector joint. Direct arrow mark on quick connector cap upper side.
   - Install fuel hose to hose clamp.

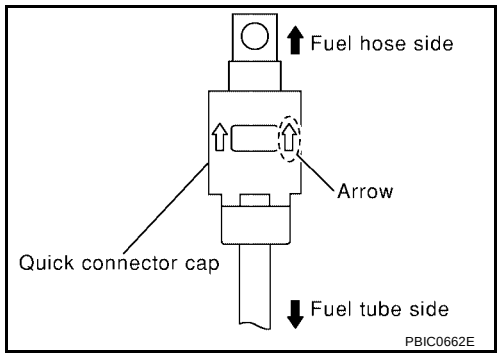

INSPECTION AFTER INSTALLATION

Make sure there is no fuel leakage at connections as follows:

1. Apply fuel pressure to fuel lines by turning ignition switch ON (with engine stopped). Then check for fuel leaks at connections.
2. Start the engine and rev it up and check for fuel leaks at connections.

   NOTE:
   Use mirrors for checking on connections out of the direct line of sight.

   CAUTION:
   Do not touch engine immediately after stopping as engine is extremely hot.
   - Perform procedures for “Throttle Valve Closed Position Learning” after finishing repairs. Refer to EC-82, "Throttle Valve Closed Position Learning" .
   - If electric throttle control actuator is replaced, perform procedures for “Idle Air Volume Learning” after finishing repairs. Refer to EC-82, "Idle Air Volume Learning" .

EXHAUST MANIFOLD AND THREE WAY CATALYST

PFP:14004

Removal and Installation

EBS00J4R

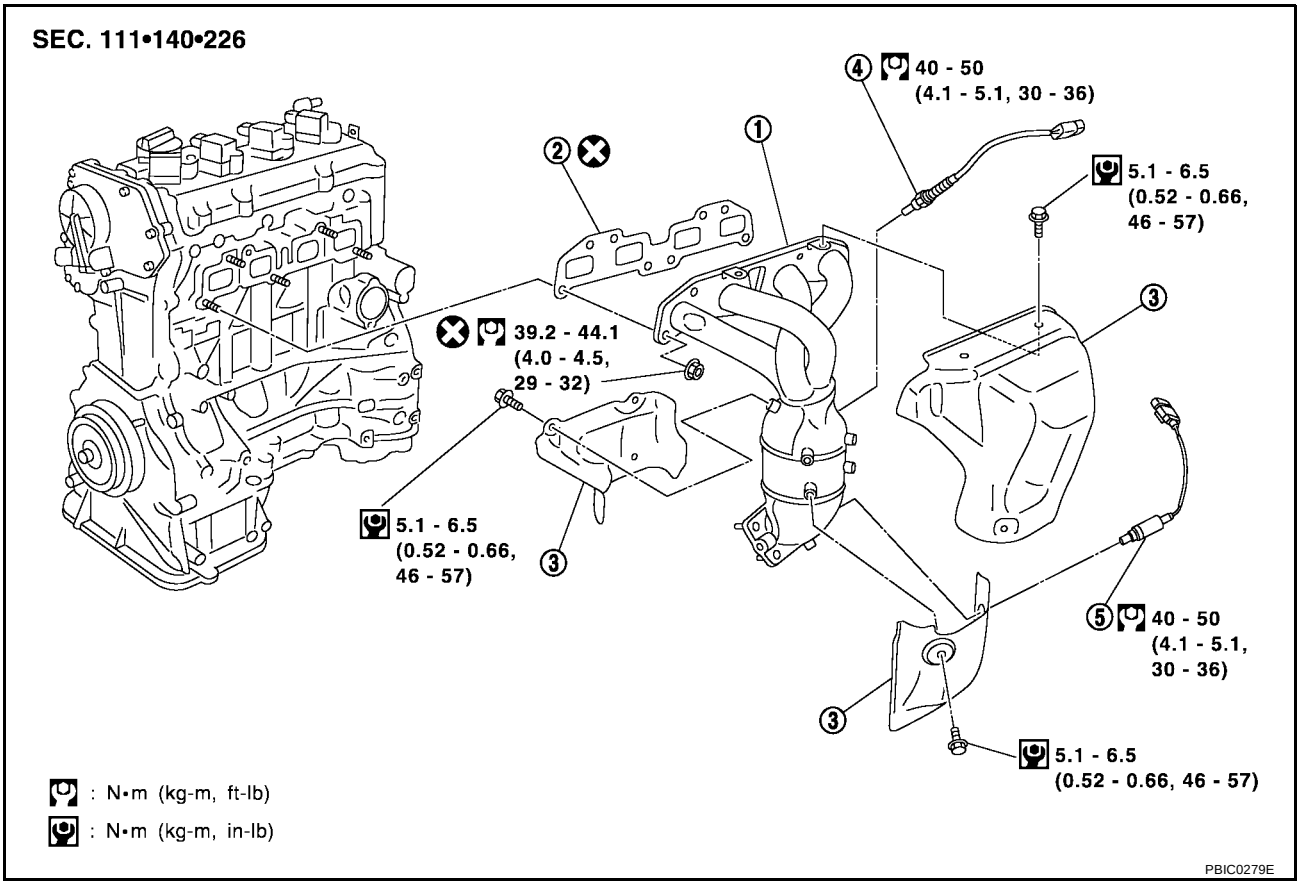

1. Exhaust manifold and three way catalyst assembly
2. Exhaust manifold gasket
3. Exhaust manifold cover (upper and lower)
4. Air fuel ratio (A/F) sensor
5. Heated oxygen sensor

REMOVAL

1. Remove the engine undercover using power tools.
2. Disconnect the electrical connector of heated oxygen sensor 1 or air fuel ratio (A/F) sensor 1, and unhook the harness from the bracket and middle clamp on the cover.
3. Remove the heated oxygen sensor 1 or air fuel ratio (A/F) sensor 1 using Tool.

   Tool numbers

   : — (J-44626)

   : KV10117100 (J-36471-A)

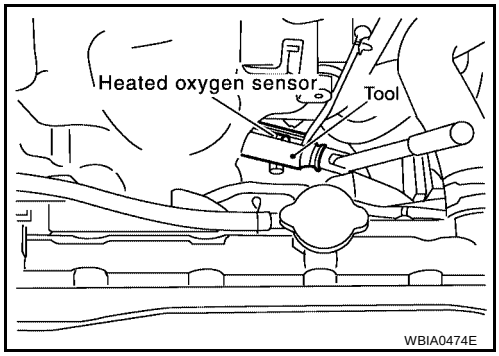

   CAUTION:
   - **Be careful not to damage heated oxygen sensor or air fuel ratio (A/F) sensor.**
   - **Discard any heated oxygen sensor or air fuel ratio (A/F) sensor which has been dropped from a height of more than 0.5 m (19.7 in) onto a hard surface such as a concrete floor; use a new one.**
4. Remove the lower exhaust manifold covers.
5. Remove the exhaust front tube. Refer to EX-4, "Removal and Installation" .
6. Remove the upper exhaust manifold cover.

7. Loosen the nuts in the sequence as shown, on the exhaust manifold and three way catalyst.
8. Remove the exhaust manifold and three way catalyst assembly and gasket. Discard the gasket.

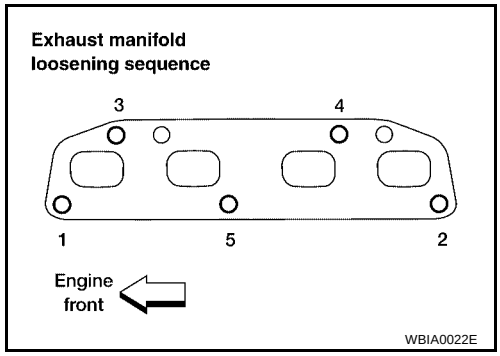

INSPECTION AFTER REMOVAL

Surface Distortion

- Use a reliable straightedge and feeler gauge to check the flatness of exhaust manifold fitting surface.

Limit : 0.7 mm (0.0276 in)

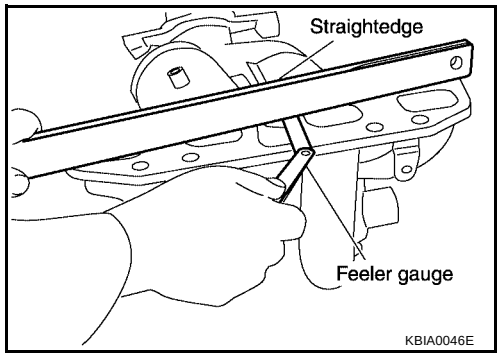

INSTALLATION

Installation is in the reverse order of removal. Pay attention to the following.

Tightening Exhaust Manifold Nuts

- Tighten the nuts in the numerical order shown, to specification. After tightening No.5, retighten No.1 and then No.3 to specification.

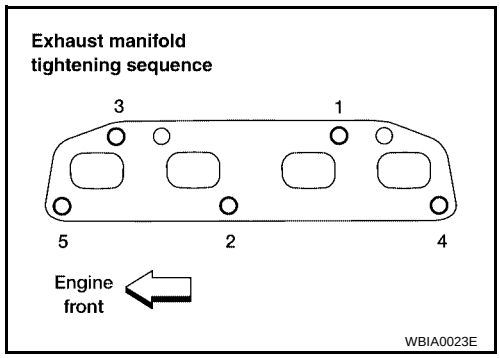

Installation of A/F Sensors and Heated Oxygen Sensors

Clean the A/F sensor and heated oxygen sensor threads with the Tool, then apply the anti-seize lubricant to the threads before installing the A/F sensor and heated oxygen sensors.

Tool number a: J-43897 - 18
b: J-43897 - 12

CAUTION:
Do not over-tighten the A/F sensors and heated oxygen sensors. Doing so may cause damage to the A/F sensors and heated oxygen sensors, resulting in a malfunction and the MIL coming on.

OIL PAN AND OIL STRAINER

PFP:11110

Removal and Installation

EBS00J4S

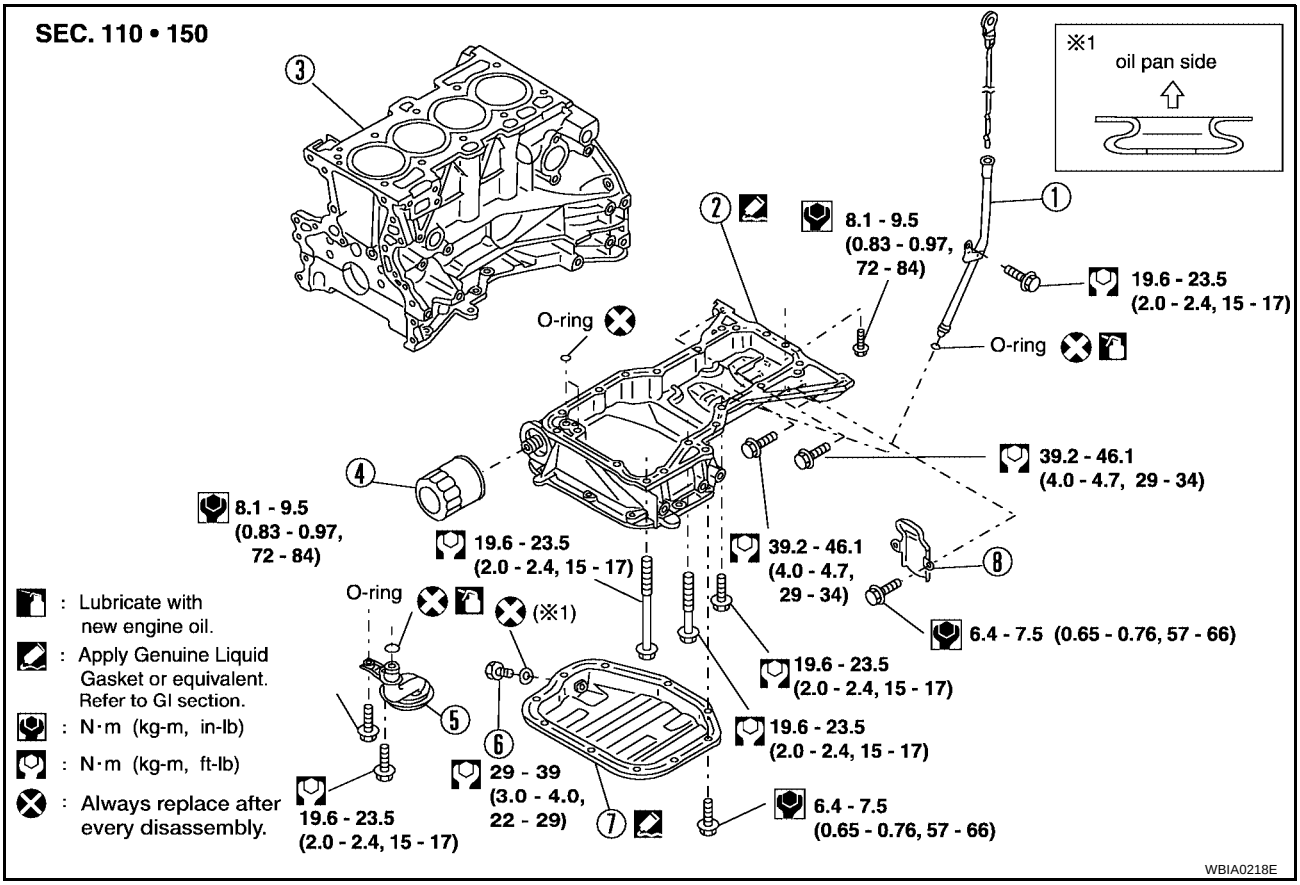

1. Oil dipstick tube	2. Oil pan, upper	3. Cylinder block
4. Oil filter	5. Oil pickup screen	6. Drain plug
7. Oil pan, lower	8. Rear plate cover	

REMOVAL

WARNING:

To avoid the danger of being scalded, never drain the engine oil when the engine is hot.

1. Remove the engine under covers on both sides, using power tool.
2. Drain engine oil. Refer to LU-8, "Changing Engine Oil" .
3. Remove the front exhaust tube. Refer to EX-4, "Removal and Installation" .
4. Remove power steering hose bracket from rear of collector.
5. Support the engine from above and underneath with suitable hoist and floor jack.
6. Remove the front suspension member for clearance to remove the oil pan. Refer to FSU-15, "REMOVAL" .
7. Remove the lower oil pan bolts. Loosen the bolts in the order shown, using power tool.

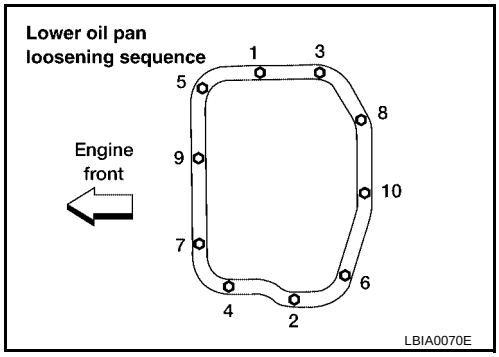

8. Remove the lower oil pan using Tool.

NOTE:
Tap gently to cut sealant around the pan; do not damage the mating surface using Tool.

Tool number : KV10111100 (J-37228)

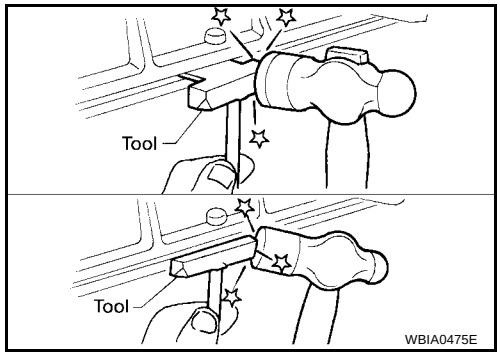

9. Remove the oil pickup screen.
10. Remove rear plate cover, and four engine-to transaxle bolts, using power tool.
11. Loosen the upper oil pan bolts in the order shown to remove upper oil pan, using power tool.

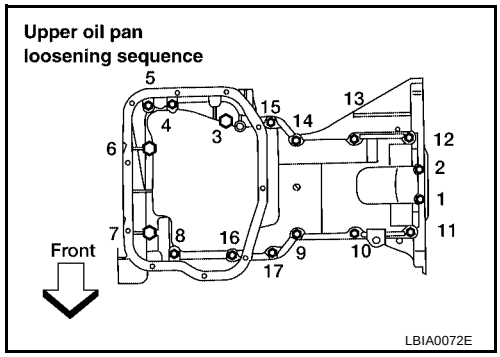

12. Remove upper oil pan using Tool.

NOTE:
Tap gently to cut sealant around the pan; do not damage the mating surface using Tool.

Tool number : KV10111100 (J-37228)

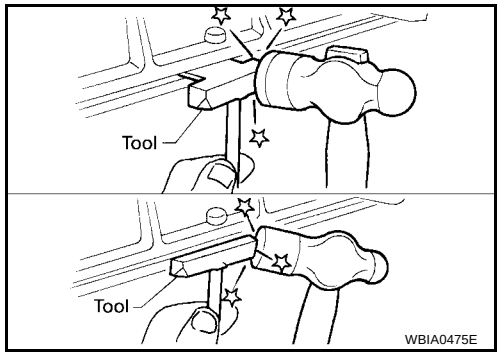

INSPECTION AFTER REMOVAL

- Clean the oil pickup screen to remove any foreign material.

INSTALLATION

1. Installation is in the reverse order of removal. Paying attention to the following.

a. Apply Genuine Silicone RTV Sealant, or equivalent, to the upper oil pan. Refer to GI-45, "RECOMMENDED CHEMICAL PRODUCTS AND SEALANTS" , and EM-6, "Precautions for Liquid Gasket" .
   - Install the two new O-rings in the upper oil pan.

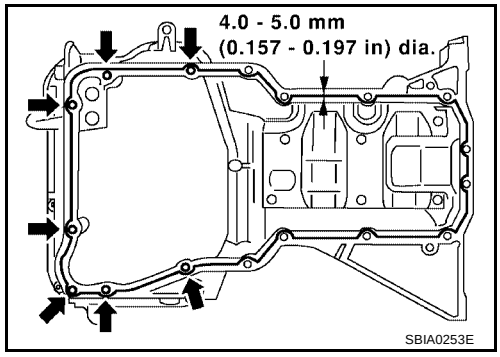

b. Tighten the upper oil pan bolts in the order as shown.
   - Bolt No.10,11,18 indicate a double tightening in the sequence of bolt No.s 1, 2, 3.

   NOTE:
   Refer below for specified bolt sizes:
   M6 × 20 mm (0.79 in): No.19, 20
   M8 × 25 mm (0.98 in): No.1, 3, 4, 9
   M8 x 45 mm (1.77 in): No.2, 5, 6, 7, 8, 17
   M8 x100 mm (3.97 in): No.12, 13, 14, 15, 16

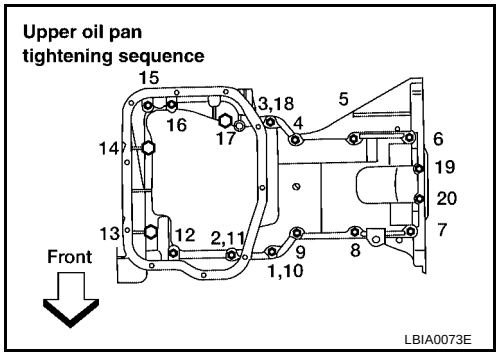

c. Apply Genuine Silicone RTV Sealant, or equivalent to the lower oil pan. Refer to GI-45, "RECOMMENDED CHEMICAL PRODUCTS AND SEALANTS" , and EM-6, "Precautions for Liquid Gasket"

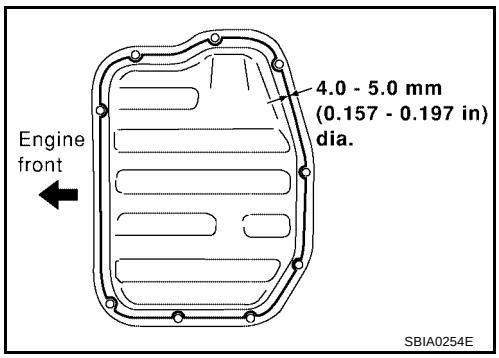

d. Tighten the lower oil pan bolts in the numerical order shown.
   - Wait at least 30 minutes after the oil pans are installed before filling the engine with oil.

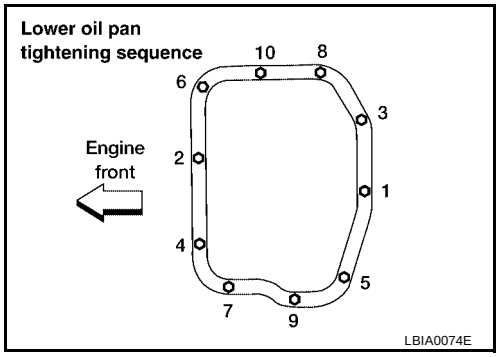

INSPECTION AFTER INSTALLATION

- Check for any engine oil leaks with the engine at operating temperature and running at idle.

IGNITION COIL

PFP:22448

Removal and Installation

EBS00J4T

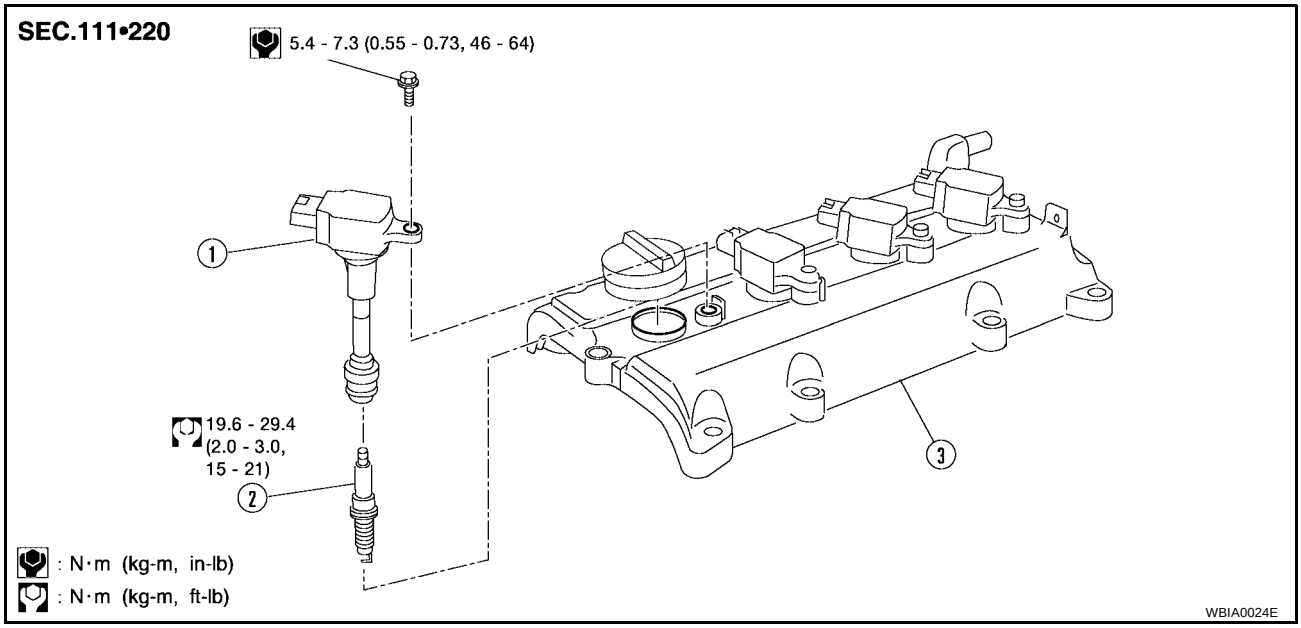

1. Ignition coil
2. Spark plug
3. Rocker cover

REMOVAL

1. Remove the engine cover.
2. Disconnect the harness connector from the ignition coil.
3. Remove the ignition coil.

CAUTION:
Do not drop or shock it.

INSTALLATION

Installation is in the reverse order of removal.

SPARK PLUG

PFP:22401

Removal and Installation

EBS00J4U

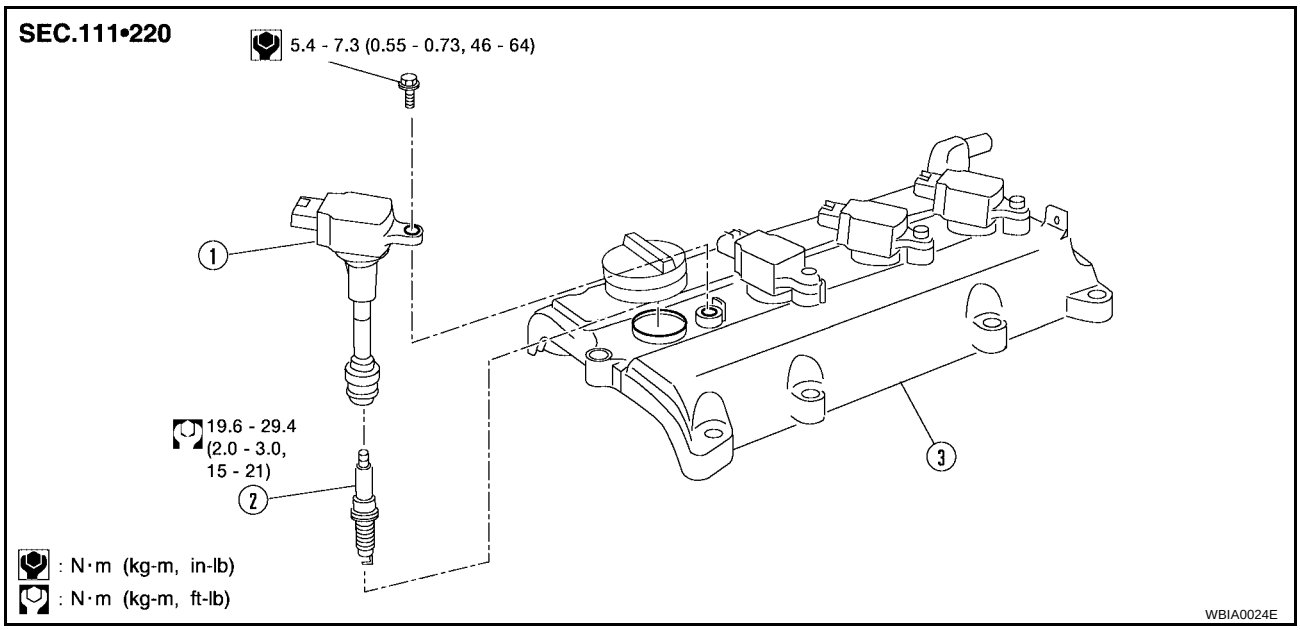

1. Ignition coil
2. Spark plug
3. Rocker cover

REMOVAL

1. Remove the ignition coil. Refer to EM-29, "Removal and Installation" .
2. Remove the spark plug with a suitable spark plug wrench.

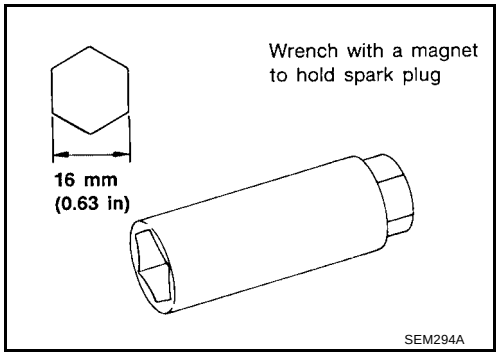

INSPECTION AFTER REMOVAL

- Do not use a wire brush for cleaning the spark plugs. Replace as necessary.

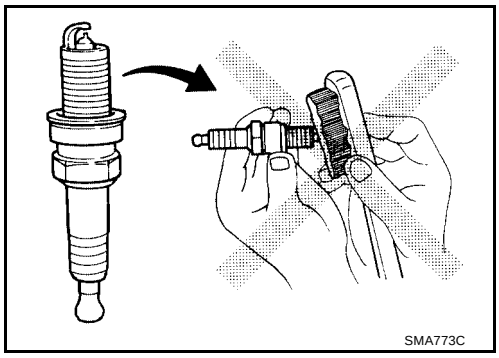

- If plug is covered with carbon, a spark plug cleaner may be used.

Cleaner air pressure : less than 588 kPa (6 kg/cm^2 , 85 psi)
Cleaning time : less than 20 seconds

- Checking and adjusting plug gap is not required between change intervals. If the gap is out of specification, replace the spark plug.

  Gap (nominal) : 1.1 mm (0.043 in)

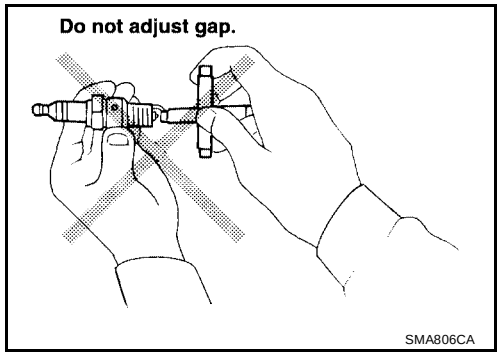

INSTALLATION

Installation is in the reverse order of removal.

- Use standard type spark plug for normal conditions.
- The hot type spark plug is suitable when fouling occurs with the standard type spark plug under conditions such as:
  - Frequent engine starts.
  - Low ambient temperatures.
- The cold type spark plug is suitable when spark plug knock occurs with the standard type spark plug under conditions such as:
  - Extended highway driving.
  - Frequent high engine revolution.

Spark Plug Types

Temperature range	NGK
Standard type	PLFR5A-11
Hot type	PLFR4A-11
Cold type	PLFR6A-11
Gap (nominal)	1.1 mm (0.043 in)

FUEL INJECTOR AND FUEL TUBE

PFP:16600

Removal and Installation

EBS00J4V

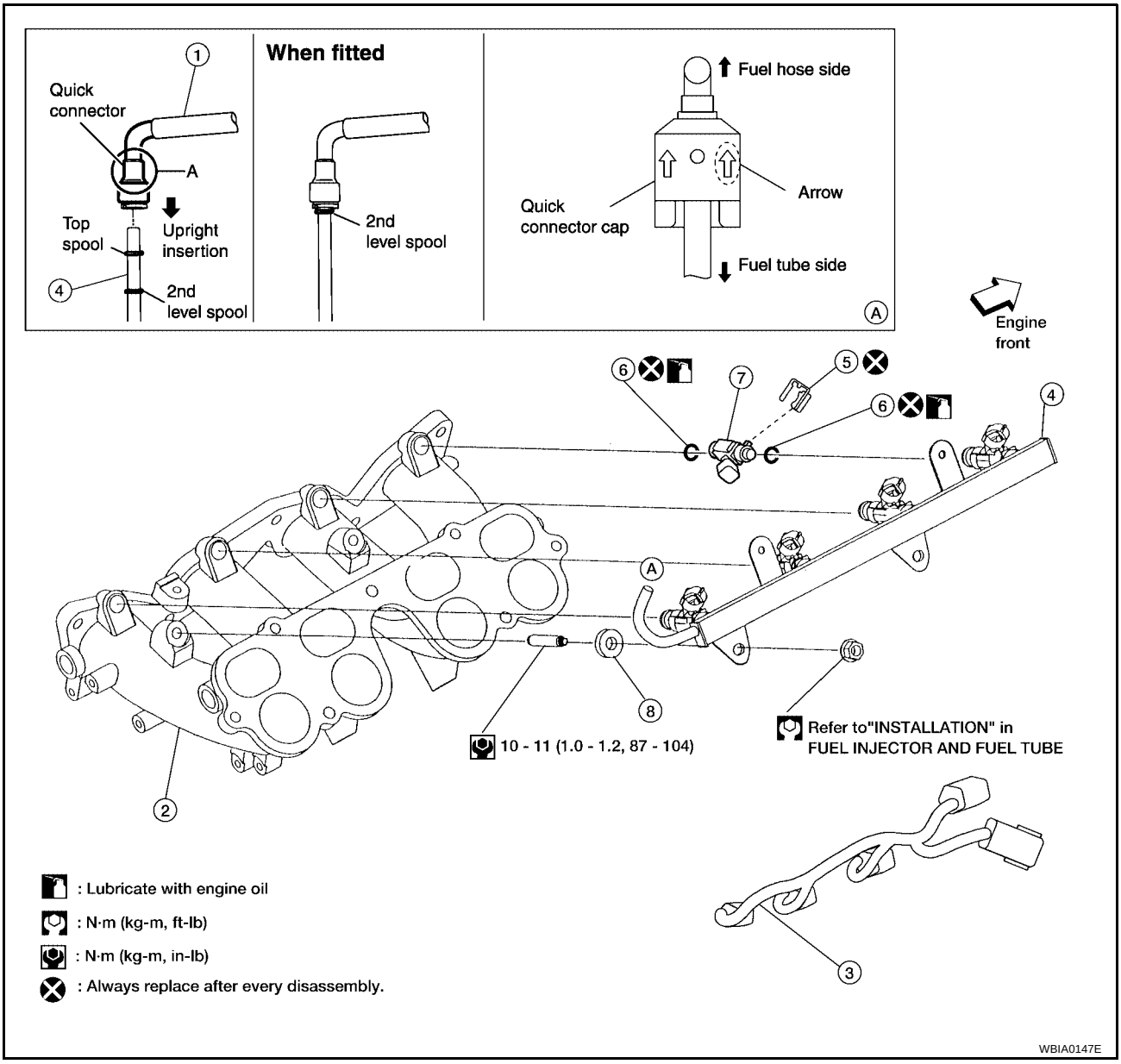

1. Fuel hose	2. Intake manifold	3. Sub-harness
4. Fuel tube	5. Clip	6. O-ring
7. Fuel injector	8. Insulator	

CAUTION:

- **Apply new engine oil to parts before installing the parts, as shown above.**
- **Do not remove or disassemble parts unless instructed as shown in the figure.**

REMOVAL

1. Release the fuel pressure. Refer to EC-84, "FUEL PRESSURE RELEASE" .
2. Remove the intake air duct. Refer to EM-17, "Removal and Installation" .
3. Disconnect the fuel hose quick connector at the fuel tube side. Refer to EM-19, "INTAKE MANIFOLD" .

   CAUTION:
   - **Prepare a container and cloth for catching any spilled fuel.**
   - **This operation should be performed in a place that is free from any open flames.**

- **While hoses are disconnected seal their openings with vinyl bag or similar material to prevent foreign material from entering them.**

4. Remove the intake collector. Refer to EM-19, "INTAKE MANIFOLD" .
5. Disconnect sub-harness for injector at engine front side, and remove it from bracket.
6. Loosen the bolts in the order as shown, then remove fuel tube and fuel injectors as an assembly.
7. Remove the fuel injectors from the fuel tube.
   - Release the clip and remove the fuel injector.
   - Pull fuel injector straight out of the fuel tube.
   - Be careful not to damage the nozzle.
   - Avoid any impact, such as dropping the fuel injector.
   - Do not disassemble or adjust the fuel injector.

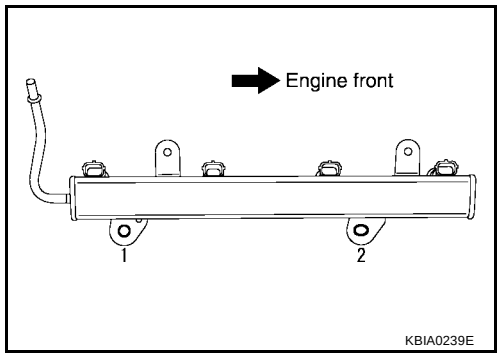

INSTALLATION

1. Install new O-rings on the fuel injector.
   - **Lubricate the O-rings lightly with new engine oil.**
   - **Be careful not to scratch it during installation. Also be careful not to twist or stretch the O-ring. If the O-ring was stretched while it is attached, do not insert it into the fuel tube immediately.**
2. Install the fuel injector into the fuel tube with the following procedure:
   - Do not reuse the clip, replace it with a new one.
   - Insert the new clip into the clip mounting groove on fuel injector.
   - Insert the clip so that projection "A" of fuel injector matches notch "A" of the clip.
3. Insert fuel injector into fuel tube with clip attached.
   - Insert it while matching it to the axial center.
   - Insert fuel injector so that projection "B" of fuel injector matches notch "B" of the clip.
   - Make sure that fuel tube flange is securely fixed in flange fixing groove on the clip.
   - Make sure that installation is complete by checking that fuel injector does not rotate or come off.
4. Install fuel tube assembly.

a. Insert the tip of each fuel injector into intake manifold.

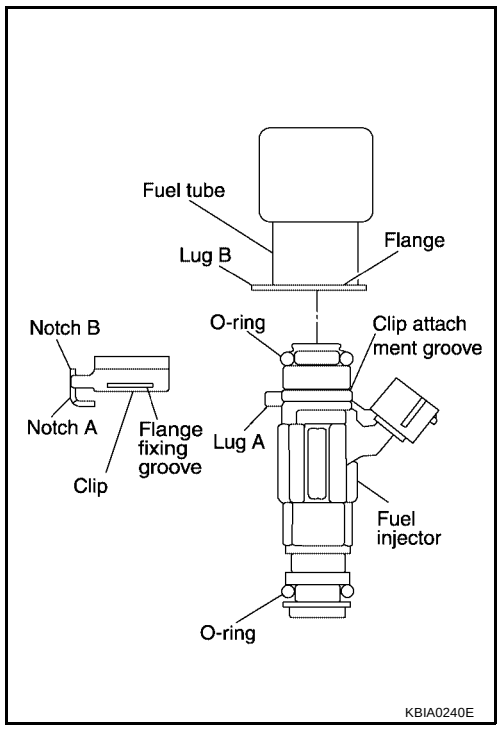

b. Tighten the bolts in two steps in the numerical order as shown.

Fuel tube assembly bolts

Step 1 : 9.3 - 10.8 N·m (0.95 - 1.1 kg-m, 83 - 95 in-lb.)

Step 2 : 20.6 - 26.5 N·m (2.1 - 2.7 kg-m, 16 - 19 ft-lb.)

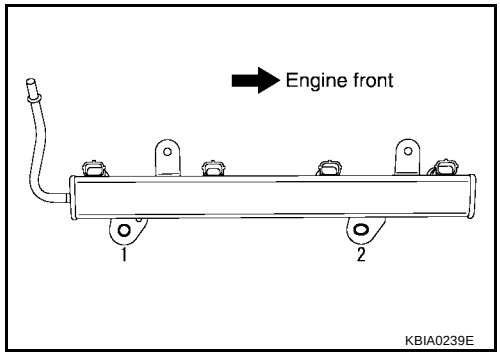

CAUTION:

- **After properly connecting fuel tube assembly to injector and fuel hose, check connection for fuel leakage.**

5. Install the intake collector. Refer to EM-19, "INTAKE MANIFOLD" .
6. Connect the fuel hose quick connector. Refer to EM-19, "INTAKE MANIFOLD" .
7. Installation of the remaining components is in the reverse order of removal.

INSPECTION AFTER INSTALLATION

Make sure there is no fuel leakage at connections as follows:

1. Apply fuel pressure to fuel lines by turning ignition switch ON (with engine stopped). Then check for fuel leaks at connections.
2. Start the engine and rev it up and check for fuel leaks at connections.

   NOTE:
   Use mirrors for checking on connections out of the direct line of sight.

   CAUTION:
   Do not touch engine immediately after stopping as engine is extremely hot.

   - Perform procedures for “Throttle Valve Closed Position Learning” after finishing repairs. Refer to EC-82, "Throttle Valve Closed Position Learning" .
   - If electric throttle control actuator is replaced, perform procedures for “Idle Air Volume Learning” after finishing repairs. Refer to EC-82, "Idle Air Volume Learning" .

ROCKER COVER

PFP:13264

Removal and Installation

EBS00J4W

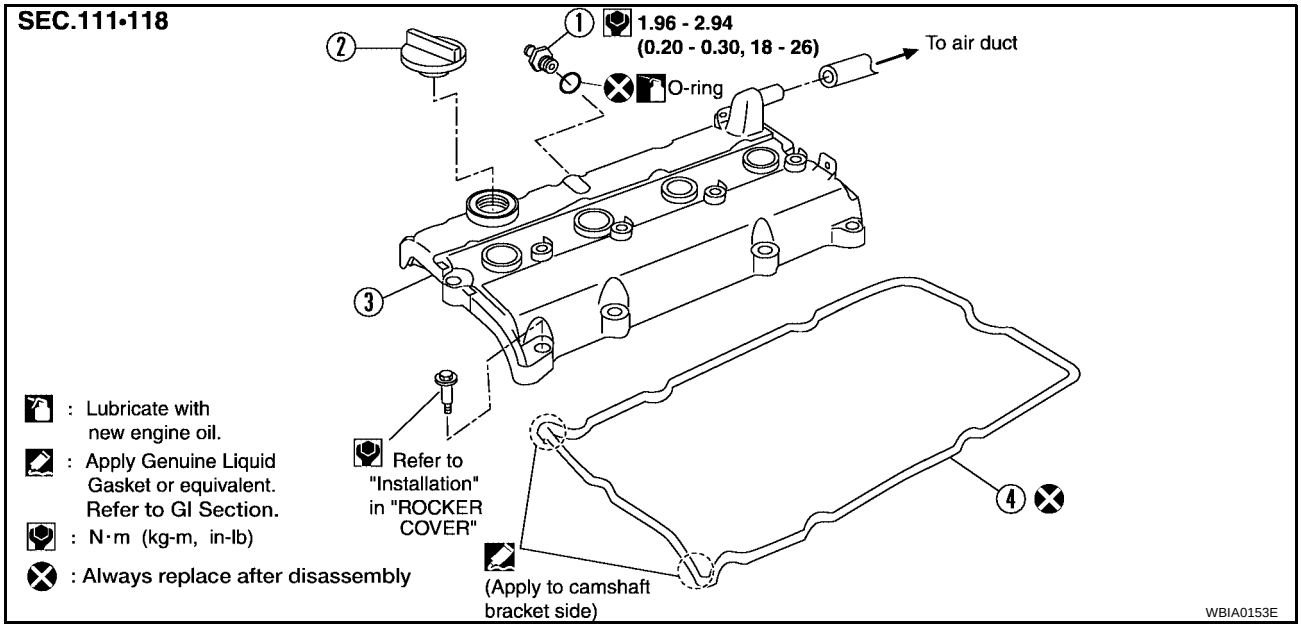

1. PCV valve
2. Oil filler cap
3. Rocker cover
4. Rocker cover gasket

REMOVAL

1. Remove the ignition coils. Refer to EM-29, "Removal and Installation" .
2. Disconnect the PCV hose and breather hose from the rocker cover.
3. Loosen the bolts in the numerical order as shown using power tool.
4. Remove the rocker cover. Remove the oil filler cap and PCV valve if necessary, to transfer to the new rocker cover.

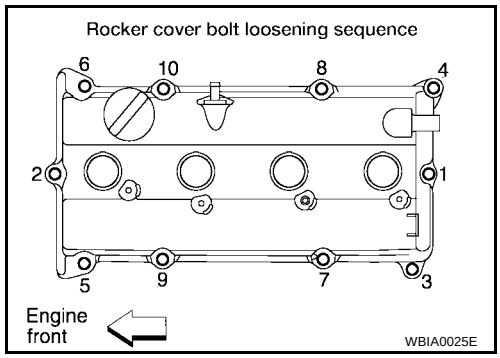

INSTALLATION

1. Apply RTV Silicone Sealant to the joint part of the cylinder head and camshaft bracket following the steps below:

- **Use Genuine Silicone RTV Sealant, or equivalent. Refer to GI-45, "RECOMMENDED CHEMICAL PRODUCTS AND SEALANTS" .**

a. Refer to illustration “a” to apply sealant to joint part of No.1 camshaft bracket and cylinder head.

b. Refer to illustration “b” to apply sealant in a 90° degree angle to the illustration “a”.

2. Install the rocker cover.
   - The rocker cover gasket must be securely installed in the groove in the rocker cover.

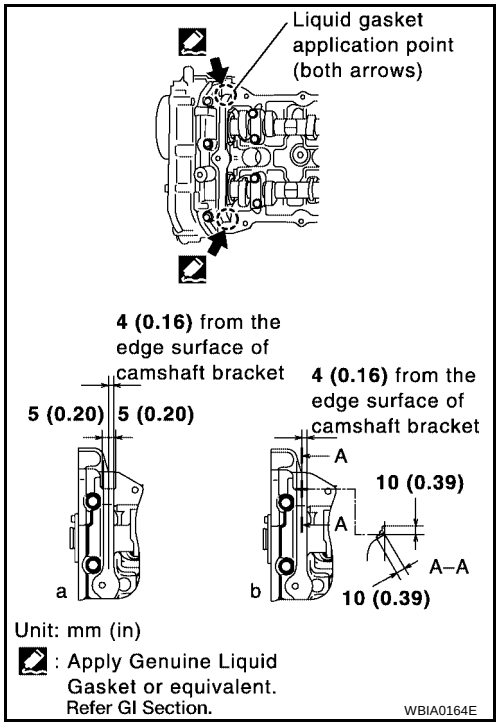

3. Tighten the rocker cover bolts in two steps, in the numerical order as shown.

Rocker cover bolt tightening 1st step	**: 1.0 - 2.9 N·m (0.1 - 0.3 kg-m, 9 - 26 in-lb)**
Rocker cover bolt tightening 2nd step	**: 7.4 - 9.3 N·m (0.75 - 0.95 kg-m, 65 - 82 in-lb)**

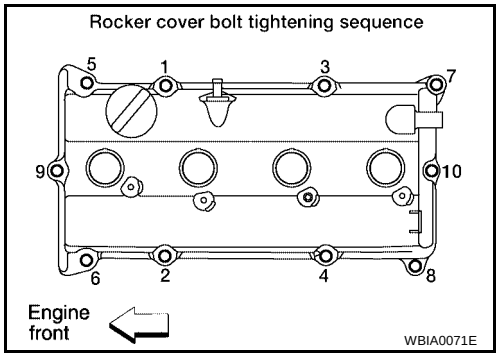

4. Connect the PCV hose and breather hose to the rocker cover. If necessary, install the oil filler cap and PCV valve and lubricate the PCV valve O-ring with new engine oil.
5. Install the ignition coils. Refer to EM-29, "Removal and Installation" .

CAMSHAFT

PFP:13001

Removal and Installation

EBS00J4X

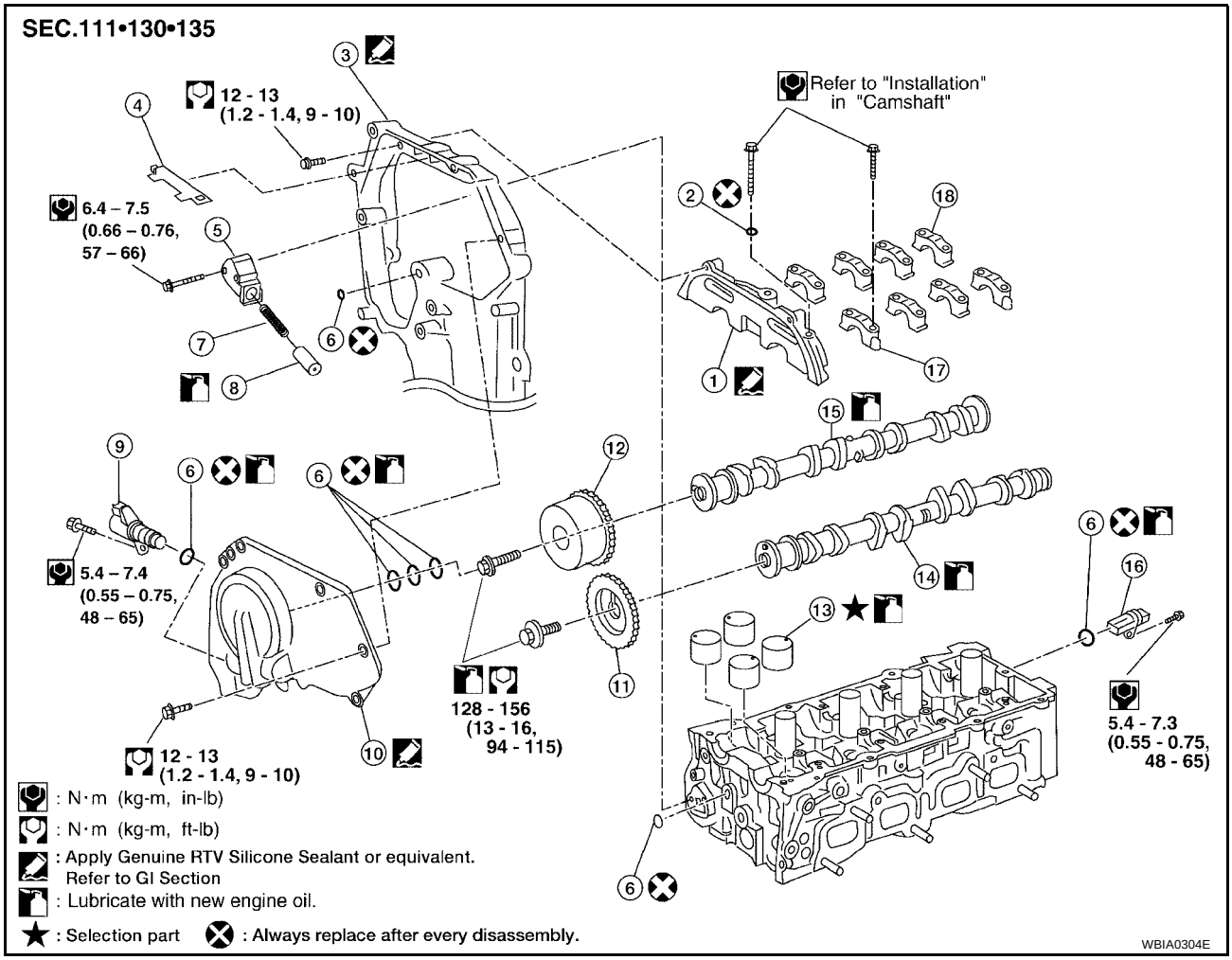

1. Camshaft brackets (1 - 5)	2. Washer	3. Front cover (partial view)
4. Chain guide	5. Chain tensioner	6. O-ring(s)
7. Chain tensioner spring	8. Chain tensioner plunger	9. IVT control solenoid valve
10. IVT control cover	11. Camshaft sprocket (EXH)	12. Camshaft sprocket (INT)
13. Valve lifter	14. Camshaft (EXH)	15. Camshaft (INT)
16. Camshaft position sensor (PHASE)		

REMOVAL

1. Remove the rocker cover. Refer to EM-35, "Removal and Installation" .
2. Remove the front right side tire and wheel using power tool.
3. Remove the RH splash shield using power tool.
4. Remove the drive belt. Refer to EM-15, "REMOVAL" .
5. Remove the coolant overflow reservoir tank.
6. Disconnect variable timing control solenoid harness connector.

7. Loosen the bolts in the order as shown.

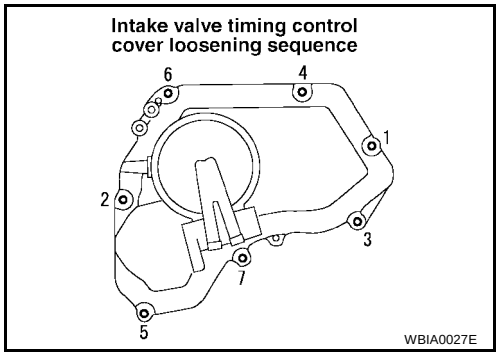

- Remove the IVT control cover by cutting the sealant using Tool.

  Tool number : KV10111100 (J-37228)

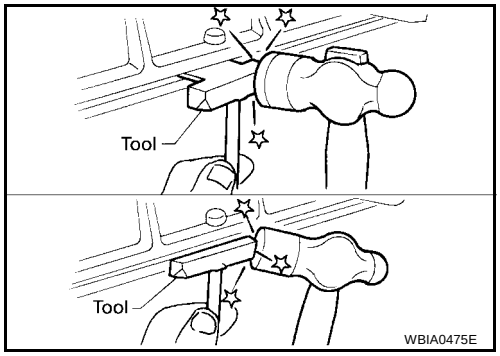

8. Set the No.1 cylinder at TDC on its compression stroke with the following procedure:

a. Open the splash cover on RH under cover.

b. Rotate crankshaft pulley clockwise, and align mating marks for TDC with timing indicator on front cover, as shown.

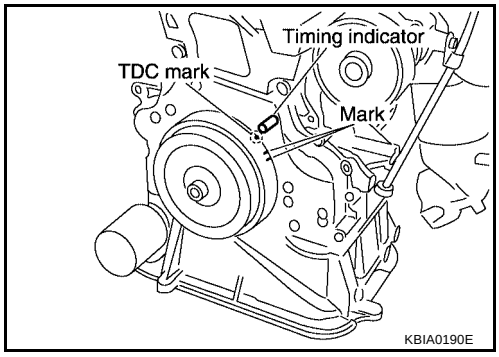

c. At the same time, make sure that the mating marks on camshaft sprockets are lined up with the yellow links in the timing chain, as shown.

- If not, rotate crankshaft pulley one more turn to line up the mating marks to the yellow links, as shown.

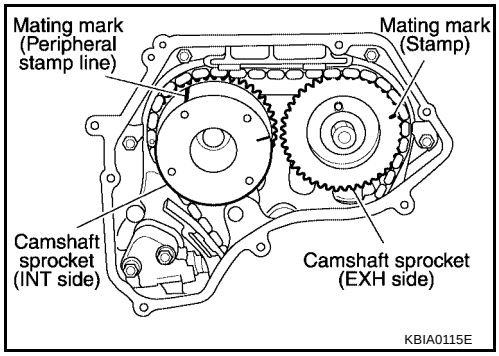

9. Pull the timing chain guide out between the camshaft sprockets through front cover.

10. Remove camshaft sprockets with the following procedure.

CAUTION:

- **Do not rotate the crankshaft or camshaft while the timing chain is removed. It causes interference between valve and piston.**

NOTE:

- Chain tension holding work is not necessary. Crankshaft sprocket and timing chain do not disconnect structurally while front cover is attached.

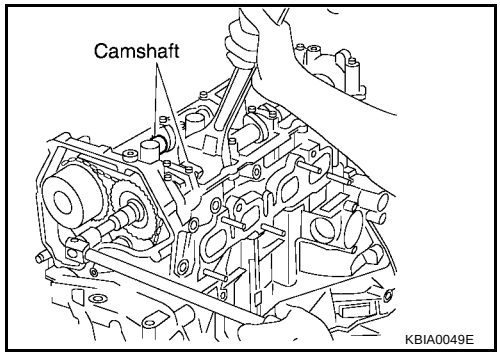

a. Line up the mating marks on camshaft sprockets with the yellow links in the timing chain, and paint an indelible mating mark on the sprocket and timing chain link plate.

b. Push in the tensioner plunger and hold. Insert a stopper pin into the hole on tensioner body to hold the chain tensioner. Remove the timing chain tensioner.

- Use a wire with 0.5 mm (0.02 in) diameter for a stopper pin.

c. Secure the hexagonal part of camshaft with a suitable tool. Loosen the camshaft sprocket mounting bolts and remove the camshaft sprockets.

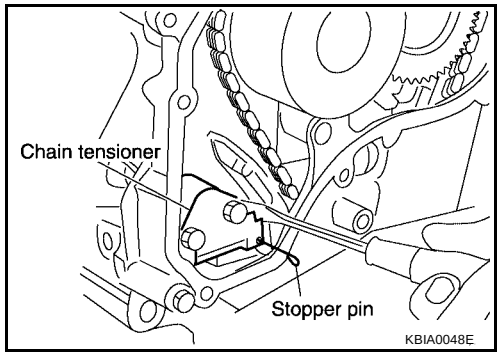

11. Loosen the camshaft bracket bolts in the order as shown, and remove the camshaft brackets and camshafts.

- Remove No.1 camshaft bracket by slightly tapping it with a rubber mallet.

12. Remove the valve lifters.

- Check mounting positions, and set them aside in the order removed.

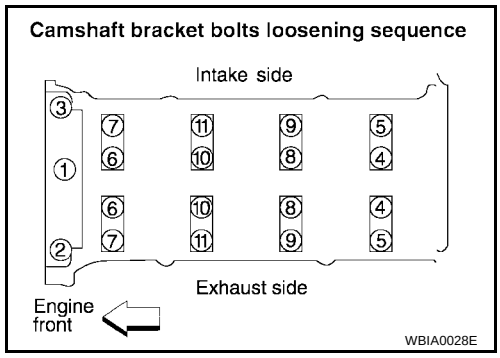

INSPECTION AFTER REMOVAL

Camshaft Runout

1. Put the camshaft on a V-block supporting the No.2 and No.5 journals.
2. Set the dial gauge vertically on the No.3 journal.
3. Turn camshaft in one direction by hand, and measure the camshaft runout on the dial gauge total indicator reading.

Standard : Less than 0.04 mm (0.0016 in)

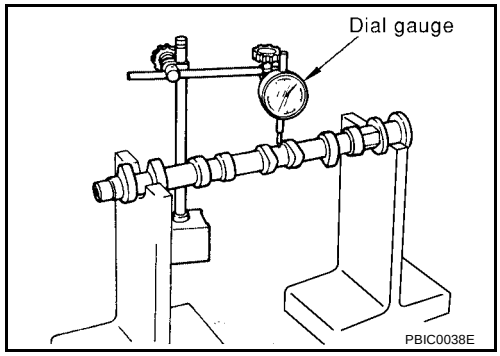

Camshaft Cam Height

1. Measure the camshaft cam height.

Standard intake cam height	**: 45.665 - 45.855 mm (1.7978 - 1.8053 in)**
Standard exhaust cam height	**: 43.975 - 44.165 mm (1.7313 - 1.7388 in)**

2. If wear is beyond the limit, replace the camshaft.

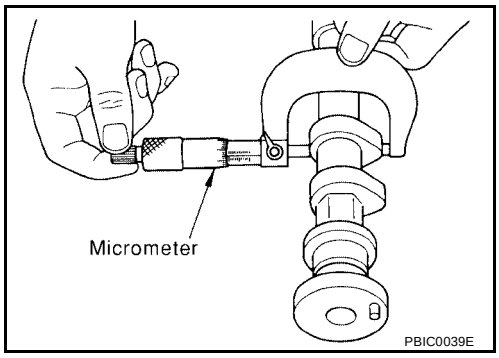

Camshaft Journal Clearance

Outer Diameter of Camshaft Journal

- Measure the outer diameter of the camshaft journal.

Standard No.1 outer diameter	**: 27.935 - 27.955 mm (1.0998 - 1.1006 in)**
Standard No.2, 3, 4, 5, outer diameter	**: 23.435 - 23.455 mm (0.9226 - 0.9234 in)**

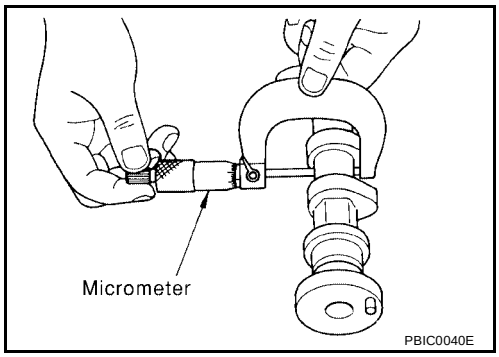

Inner Diameter of Camshaft Bracket

- Tighten the camshaft bracket bolts to the specified torque following the tightening pattern as shown. Refer to Step 4 of EM-42, "INSTALLATION" , of ″CAMSHAFT″ for the specified torque sequence.

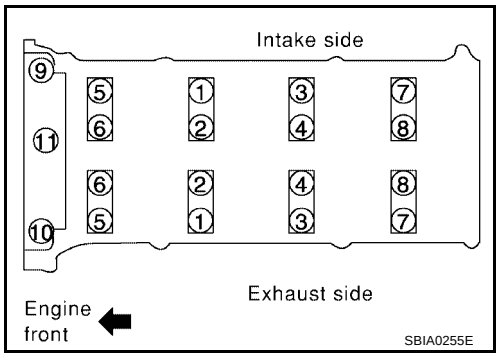

- Using inside micrometer, measure inner diameter of camshaft bracket.

Standard No.1	**: 28.000 - 28.021 mm (1.1024 - 1.1032 in)**
Standard No.2, 3, 4, 5	**: 23.500 - 23.521 mm (0.9252 - 0.9260 in)**

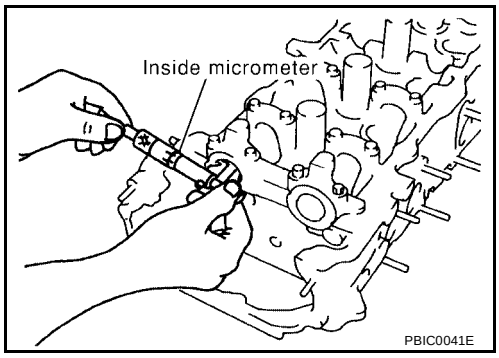

Calculation of Camshaft Journal Clearance

- (Journal clearance) = (inner diameter of camshaft bracket) – (outer diameter of camshaft journal)

Standard	**: 0.045 - 0.086 mm (0.0018 - 0.0034 in)**

- When out of the specified range above, replace either or both the camshaft and the cylinder head assembly.

NOTE:
Inner diameter of the camshaft bracket is manufactured together with the cylinder head. If the camshaft bracket is out of specification, replace the whole cylinder head assembly.

Camshaft End Play

1. Install a dial gauge in the thrust direction on the front end of the camshaft. Measure the end play with the dial gauge while moving the camshaft forward and backward (in direction to axis).

   Standard end play : 0.115 - 0.188 mm (0.0045 - 0.0074 in)

2. If out of the specified range, replace with new camshaft and measure again.
3. If out of the specified range again, replace with new cylinder head assembly.

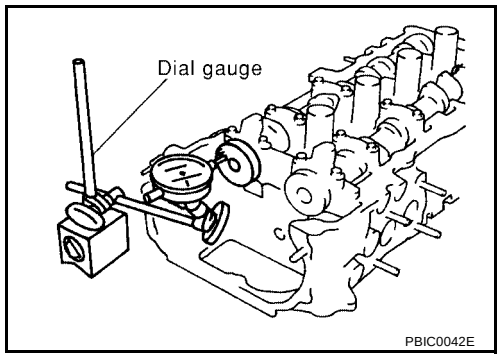

Camshaft Sprocket Runout

1. Install the camshaft in the cylinder head.
2. Install the camshaft sprocket on the camshaft.
3. Measure camshaft sprocket runout while turning the camshaft by hand.

   Runout : Less than 0.15 mm (0.0059 in)

4. If it exceeds the specification, replace camshaft sprocket.

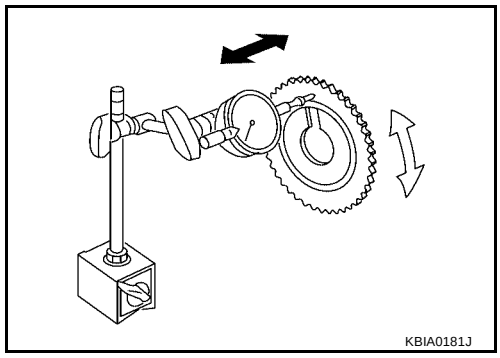

Valve Lifter

- Check if the surface of the valve lifter has any excessive wear or cracks, replace as necessary.

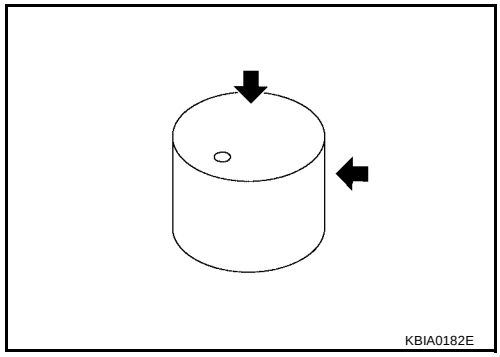

Valve Lifter Clearance

Outer Diameter of Valve Lifter

- Measure the outer diameter of the valve lifter.

  Valve lifter outer diameter : 33.965 - 33.980 mm (1.3372 - 1.3378 in)

- If out of the specified range, replace the valve lifter.

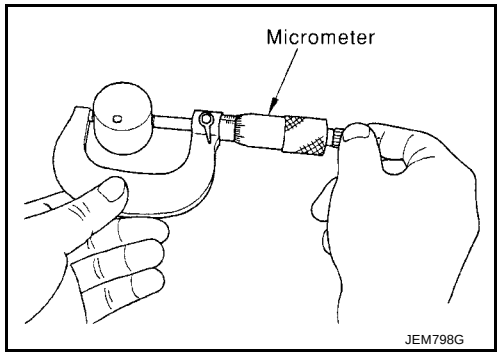

Valve Lifter Bore Inner Diameter

- Using inside micrometer, measure diameter of valve lifter bore of cylinder head.

  Standard : 34.000 - 34.021 mm (1.3386 - 1.3394 in)

- If out of the specified range, replace the cylinder head assembly.

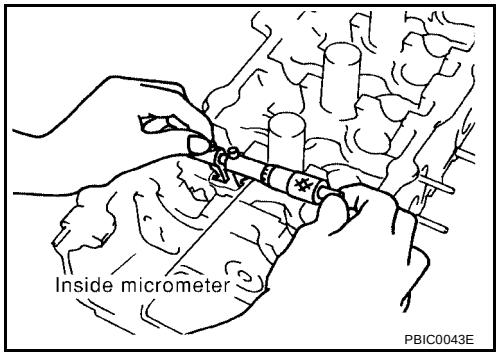

Calculation of Valve Lifter Clearance

- (Valve lifter clearance) = (hole diameter for valve lifter) – (outer diameter of valve lifter)

  Standard : 0.020 - 0.056 mm (0.0008 - 0.0022 in)

- If out of specified range, replace either or both valve lifter and cylinder head assembly.

INSTALLATION

1. Install the valve lifter.
   - Install them in the same position from which they were removed.
2. Install the camshafts.
   - The distinction between the intake and exhaust camshafts is in a difference of shapes of the back end:

     Intake: Signal plate for the camshaft position sensor (PHASE)
     Exhaust: Cone end shape

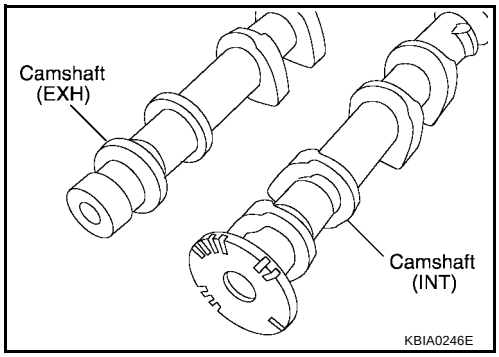

   - Install camshafts so that the dowel pins on the front side are positioned as shown.

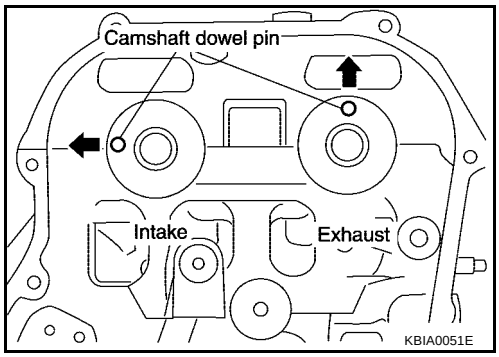

3. Install camshaft brackets.
   - Install by referring to identification mark on upper surface mark.
   - Install so that identification mark can be correctly read when viewed from the exhaust side.

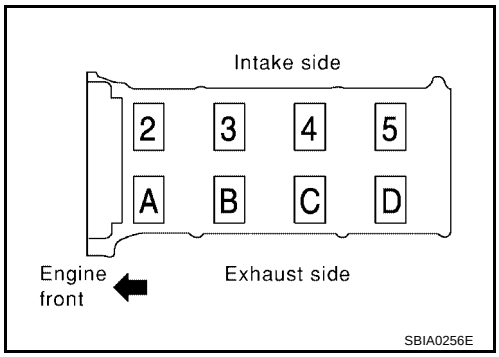

- Install No. 1 camshaft bracket as follows.
  - Apply sealant to No.1 camshaft bracket as shown.
- **Use Genuine Silicone RTV Sealant, or equivalent. Refer to GI-45, "RECOMMENDED CHEMICAL PRODUCTS AND SEALANTS" .**

CAUTION:
- **After installation, be sure to wipe off any excessive sealant leaking from part "A" (both on right and left sides).**

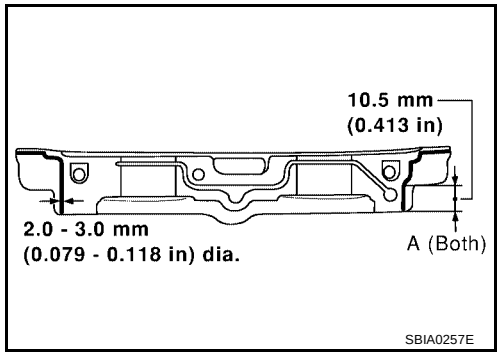

- Apply sealant to camshaft bracket contact surface on the front cover backside.
- Apply sealant to the outside of bolt hole on front cover.

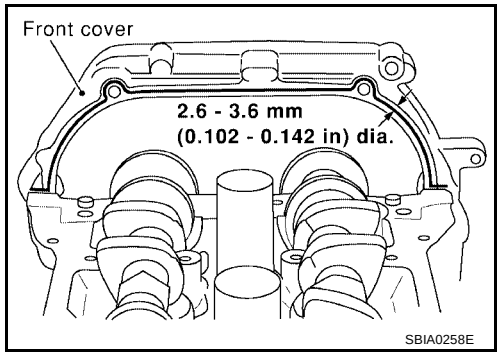

- Position the No.1 camshaft bracket near the mounting position, and install it without disturbing the sealant applied to the surfaces.

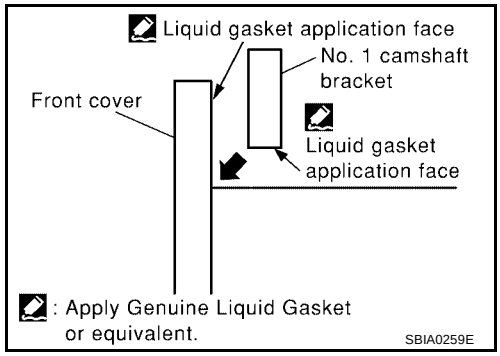

4. Tighten camshaft bracket bolts in four steps in the order as shown.

Step 1 (bolts 9 - 11) : 2.0 N·m (0.2 kg-m, 17 in-lb)
Step 2 (bolts 1 - 8) : 2.0 N·m (0.2 kg-m, 17 in-lb)
Step 3 (bolts 1 - 11) : 5.9 N·m (0.6 kg-m, 52 in-lb)
Step 4 (bolts 1 - 11) : 9.0 - 11.8 N·m (0.92 - 1.2 kg-m, 80 - 104 in-lb)

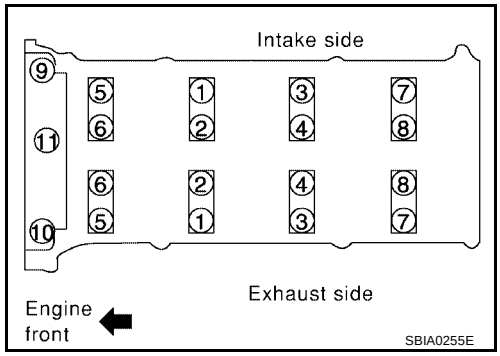

CAUTION:
After tightening camshaft bracket bolts, be sure to wipe off excessive sealant from the parts listed below.
- **Mating surface of rocker cover.**
- **Mating surface of front cover, when installed without the front cover.**

5. Install camshaft sprockets.
   - Install them by lining up the mating marks on each camshaft sprocket with the ones painted on the timing chain during removal.
   - Before installation of chain tensioner, it is possible to re-match the marks on timing chain with the ones on each sprocket.

   CAUTION:
   - **Aligned mating marks could slip. Therefore, after matching them, hold the timing chain in place by hand.**
   - **Before and after installing chain tensioner, check again to make sure that mating marks have not slipped.**

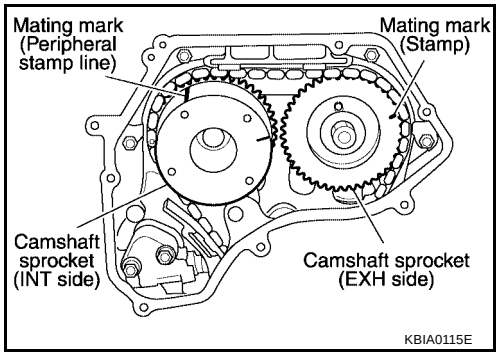

Camshaft sprocket mounting bolts	**: 128 - 156 N·m (13 - 16 kg-m, 94 - 115 ft-lb)**

6. Install chain tensioner.

   CAUTION:
   - **After installation, pull the stopper pin off completely, and make sure that the tensioner is fully released.**
7. Install chain guide.
8. Install IVT control cover with the following procedure.

a. Install IVT control solenoid valve to intake valve timing control cover.

b. Install O-ring to front cover side.

c. Apply Genuine Silicone RTV Sealant to the positions as shown in the figure. Refer to GI-45, "RECOMMENDED CHEMICAL PRODUCTS AND SEALANTS" .

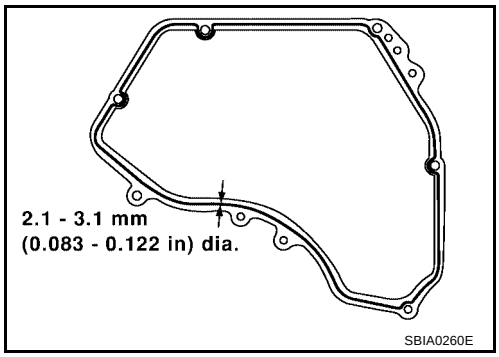

d. Install IVT control cover.
   - Tighten the bolts in the numerical order as shown.
9. Check and adjust valve clearances. Refer to EM-45, "Valve Clearance" .
10. Installation of the remaining components is in the reverse order of removal.

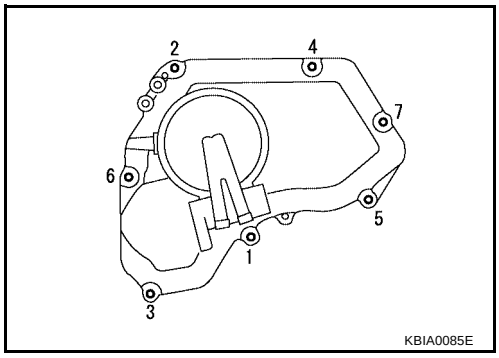

INSPECTION AFTER INSTALLATION

EBS00J4Y

INSPECTION OF CAMSHAFT SPROCKET (INT) OIL GROOVE

CAUTION:
- **Perform this inspection only when DTC P0011 is detected in self-diagnostic results of CONSULT II and it is directed according to inspection procedure of EC section. Refer to EC-160, "DTC P0011 IVT CONTROL" .**
- **Check when engine is cold so as to prevent burns from any splashing engine oil.**

1. Check engine oil level. Refer to LU-7, "ENGINE OIL" .
2. Perform the following procedure so as to prevent the engine from being unintentionally started while checking.

a. Release fuel pressure. Refer to EC-84, "FUEL PRESSURE RELEASE" .

b. Disconnect ignition coil and injector harness connectors if practical.

3. Remove IVT control solenoid valve. Refer to EM-37, "CAMSHAFT" .

4. Crank engine, and then make sure that engine oil comes out from IVT control cover oil hole. End cranking after checking.

   WARNING:
   Be careful not to touch rotating parts (drive belts, idler pulley, and crankshaft pulley, etc.).

   CAUTION:
   - **Engine oil may squirt from IVT control solenoid valve installation hole during cranking. Use a shop cloth to prevent engine oil from splashing on worker, engine components and vehicle.**
   - **Do not allow engine oil to get on rubber components such as drive belts or engine mount insulators. Immediately wipe off any splashed engine oil.**

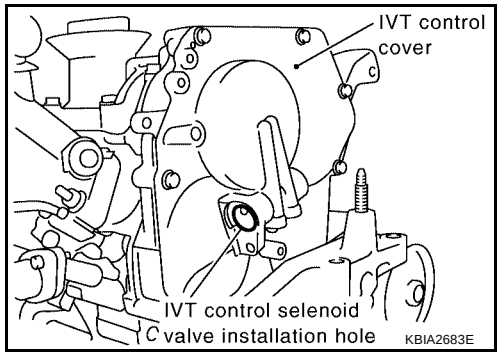

5. Clean oil groove between oil strainer and IVT control solenoid valve if engine oil does not come out from IVT control cover oil hole. Refer to LU-5, "LUBRICATION SYSTEM" .
6. Remove components between IVT control solenoid valve and camshaft sprocket (INT), and then check each oil groove for clogging.
   - Clean oil groove if necessary. Refer to LU-5, "LUBRICATION SYSTEM" .
7. After inspection, installation of the remaining components is in the reverse order of removal.

Valve Clearance

EBS00J4Z

INSPECTION

- Perform this inspection as follows after removal, installation, or replacement of the camshaft or any valve-related parts, or if there are any unusual engine conditions due to changes in valve clearance over time (starting, idling, and/or noise).

1. Warm up the engine, then stop it.
2. Remove front RH engine under cover using power tool.
3. Remove the rocker cover using power tool.
   Refer to EM-35, "Removal and Installation" .
4. Turn crankshaft pulley in normal direction (clockwise when viewed from front) to align TDC identification mark (without paint mark) with timing indicator.

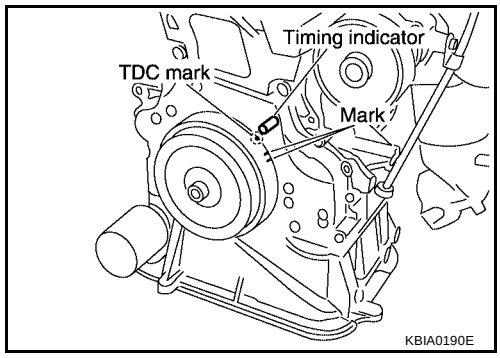

5. At this time, check that the both intake and exhaust cam lobes of No. 1 cylinder face outside.
   - If they do not face outside, turn crankshaft pulley once more.

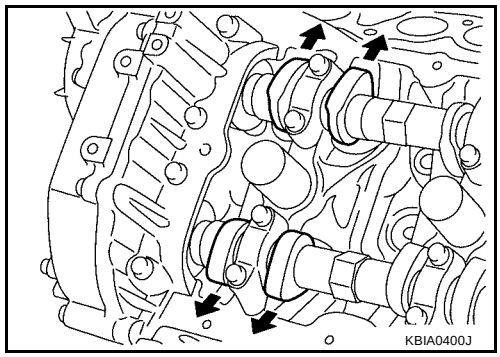

6. By referring to the figure (locations indicated with black arrow), measure valve clearances with a feeler gauge at locations marked X as shown in the table below.
   - No.1 cylinder compression TDC.

Cylinder	No.1		No.2		No.3		No.4	
Valve	INT	EXH	INT	EXH	INT	EXH	INT	EXH
Measurable	×	×	×			x		

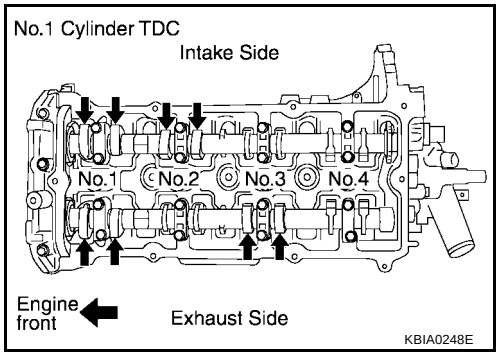

   - Use a feeler gauge to measure the clearance between valve and camshaft.

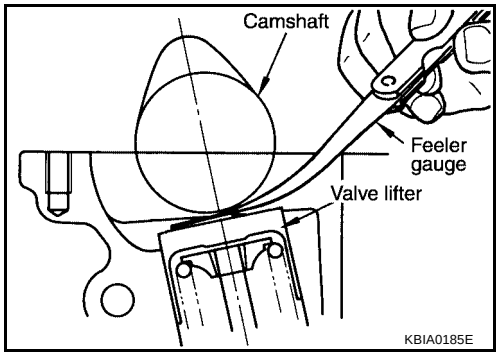

Valve clearance standard:

Cold	**Intake**	**: 0.24 - 0.32 mm (0.009 - 0.013 in)**
	Exhaust	**: 0.26 - 0.34 mm (0.010 - 0.013 in)**
Hot*	**Intake**	**: 0.32 - 0.40 mm (0.013 - 0.016 in)**
	Exhaust	**: 0.33 - 0.41 mm (0.013 - 0.016 in)**

*Reference data at approximately 80°C (176°F)

CAUTION:
If inspection was carried out with cold engine, check that values with fully warmed up engine are still within specifications.

7. Turn crankshaft one complete revolution (360°) and align mark on crankshaft pulley with pointer.
8. By referring to the figure (locations indicated with black arrow), measure valve clearances with a feeler gauge at locations marked X as shown in the table below.
   - No.4 cylinder compression TDC.

Cylinder	No.1		No.2		No.3		No.4	
Valve	INT	EXH	INT	EXH	INT	EXH	INT	EXH
Measurable				x	×		x	×

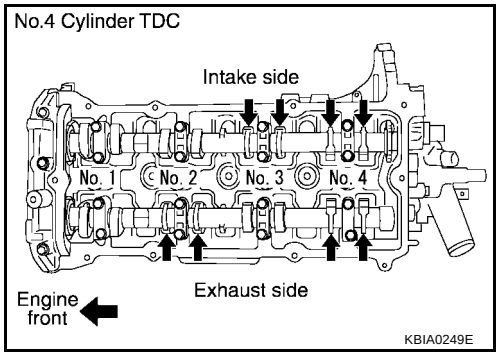

9. If out of specifications, adjust as follows.

ADJUSTMENT

- Perform adjustment depending on selected head thickness of valve lifter.
- The specified valve lifter thickness is the dimension at normal temperatures. Ignore dimensional differences caused by temperature. Use the specifications for hot engine condition to adjust.

1. Remove camshaft. Refer to EM-37, "Removal and Installation" .
2. Remove the valve lifters at the locations that are outside the standard.
3. Measure the center thickness of the removed valve lifters with a micrometer.

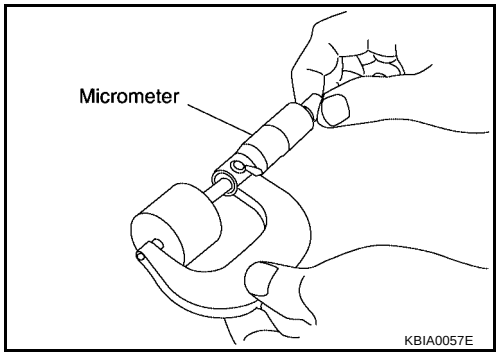

4. Use the equation below to calculate valve lifter thickness for replacement.
   - Valve lifter thickness calculation.
     t = t1 + (C1 - C2)
     t = Thickness of replacement valve lifter.
     t1 = Thickness of removed valve lifter.
     C1 = Measured valve clearance.
     C2 = Standard valve clearance.
   - Thickness of a new valve lifter can be identified by stamp marks on the reverse side (inside the cylinder).
     Stamp mark 696 indicates a thickness of 6.96 mm (0.2740 in)
     Available thickness of valve lifter: 26 sizes with a range of 6.96 to 7.46 mm (0.2740 to 0.2937 in), in steps of 0.02 mm (0.0008 in), when assembled at the factory.

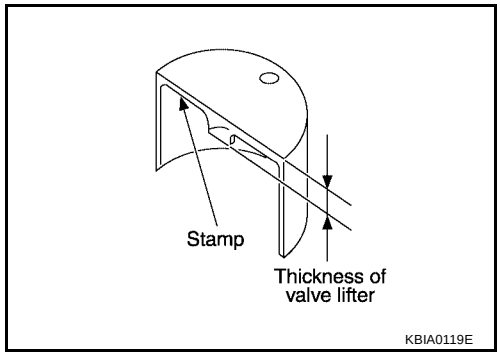

5. Install the selected valve lifter.
6. Install camshaft.
7. Manually turn crankshaft pulley a few turns.
8. Check that valve clearances for cold engine are within specifications, by referring to the specified values.
9. After completing the repair, check valve clearances again with the specifications for warmed engine. Use a feeler gauge to measure the clearance between the valve and camshaft. Make sure the values are within specifications.

Valve clearance standard:

Cold	**Intake**	**: 0.24 - 0.32 mm (0.009 - 0.013 in)**
	Exhaust	**: 0.26 - 0.34 mm (0.010 - 0.013 in)**
Hot*	**Intake**	**: 0.32 - 0.40 mm (0.013 - 0.016 in)**
	Exhaust	**: 0.33 - 0.41 mm (0.013 - 0.016 in)**

***: Reference data at approximately 80°C (176°F)**

TIMING CHAIN

PFP:13028

Removal and Installation

EBS00J50

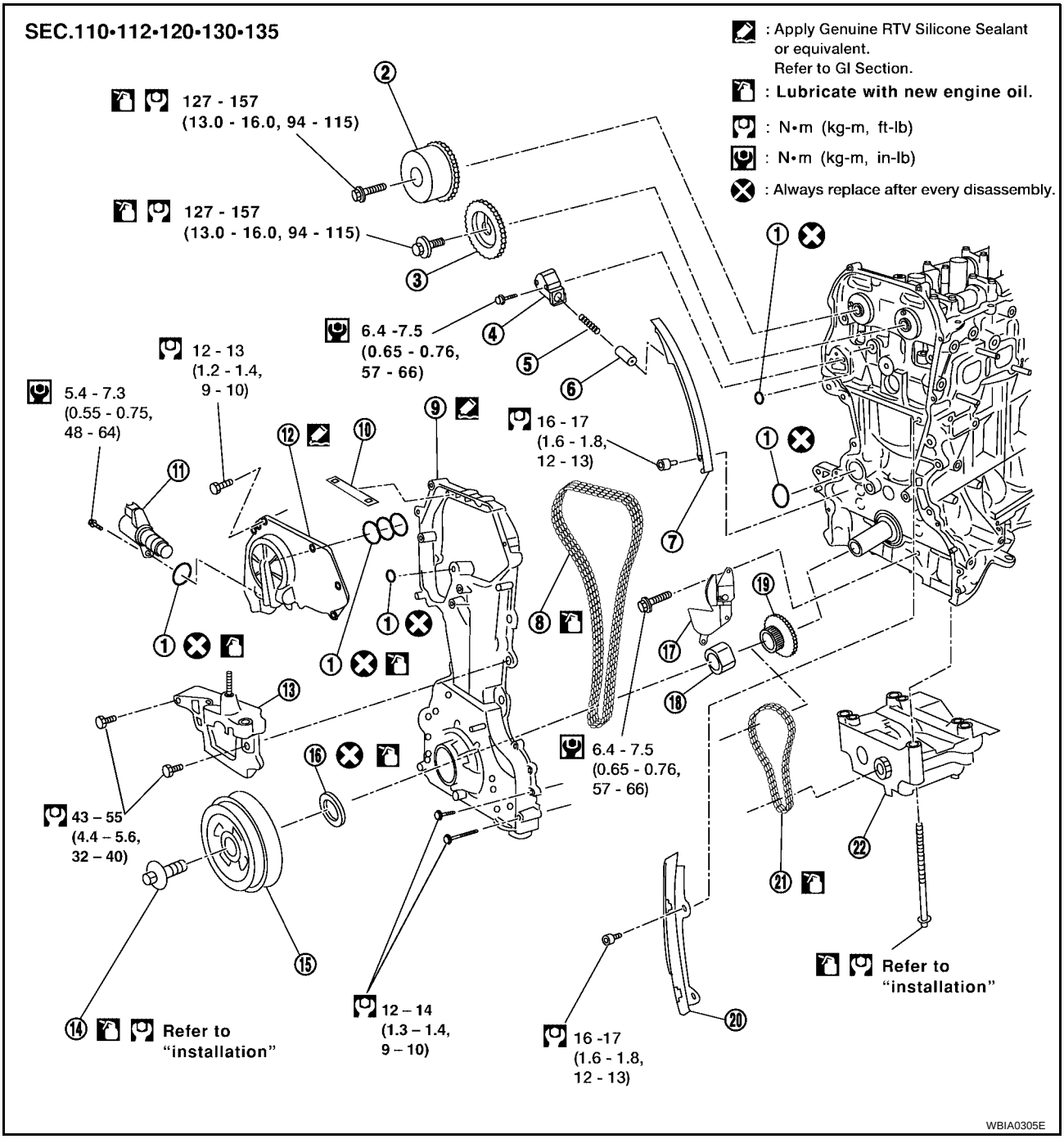

1. Oil rings	2. Camshaft sprocket (INT)	3. Camshaft sprocket (EXH)
4. Chain tensioner	5. Spring	6. Chain tensioner plunger
7. Timing chain slack guide	8. Timing chain	9. Front cover
10. Chain guide	11. IVT solenoid valve	12. IVT cover
13. Engine mounting bracket	14. Crankshaft pulley bolt	15. Crankshaft pulley
16. Front oil seal	17. Balancer unit timing chain tensioner	18. Oil pump drive spacer
19. Crankshaft sprocket	20. Timing chain tension guide	21. Balancer unit timing chain
22. Balancer unit		

CAUTION:

Apply new engine oil to parts marked in illustration before installation.

REMOVAL

1. Support the engine and transaxle assembly with suitable tools.
2. Remove RH splash shield.
3. Remove the upper and lower oil pan, and oil strainer. Refer to EM-26, "Removal and Installation" .
4. Remove generator. Refer to SC-28, "Removal" .
5. Remove engine cover.
6. Disconnect variable timing control solenoid harness connector.
7. Remove engine ground.
8. Remove the coolant overflow reservoir tank.
9. Position the RH engine compartment fuse and relay box aside.
10. Remove the RH engine mount and bracket. Refer to EM-71, "Removal and Installation" .
11. Loosen bolts in the numerical order as shown.

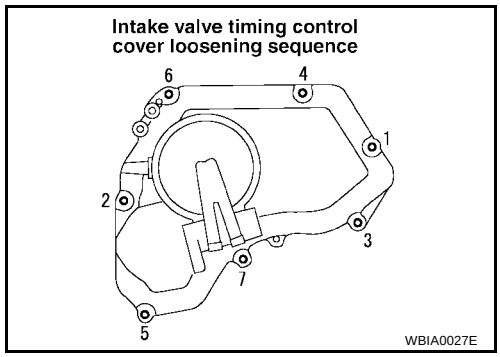

Remove the IVT (intake valve timing) control cover using Tool.

Tool number : KV10111100 (J-37228)

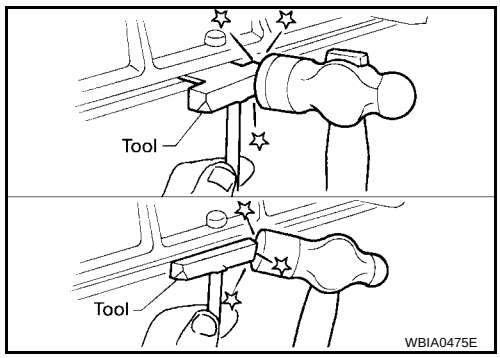

12. Pull chain guide between camshaft sprockets out through front cover.

13. Set the No.1 cylinder at TDC on the compression stroke with the following procedure:

a. Rotate the crankshaft pulley clockwise and align the mating marks to the timing indicator on the front cover.

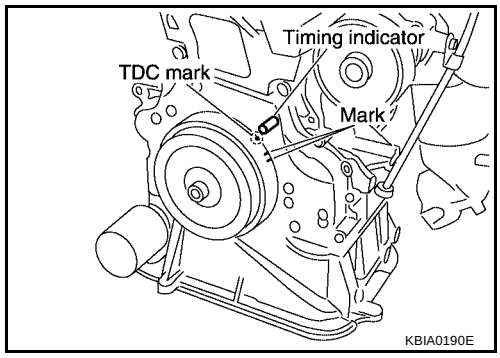

b. At the same time, make sure that the mating marks on the camshaft sprockets are lined up as shown.
   - If not lined up, rotate the crankshaft pulley one more turn to line up the mating marks to the positions as shown.

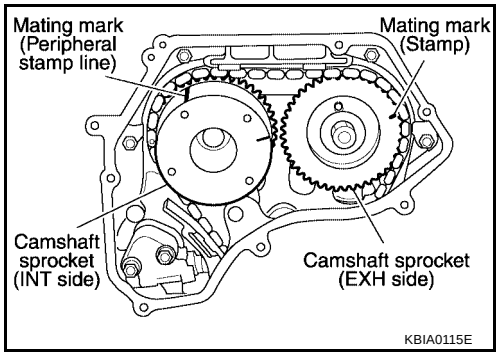

14. Remove crankshaft pulley with the following procedure:

a. Hold the crankshaft pulley using suitable tool, then loosen the crankshaft pulley bolt, and pull the pulley out about 10 mm (0.39 in).

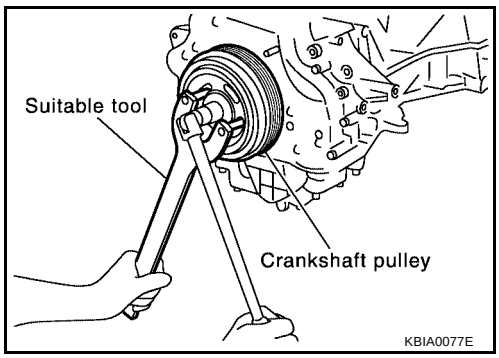

b. Attach suitable pulley puller in the M 6 (0.24 in diameter) thread hole on crankshaft pulley, and remove crankshaft pulley using a suitable puller.

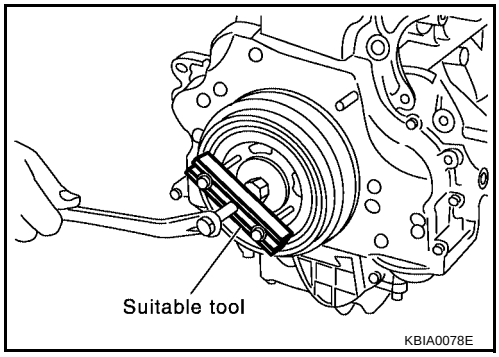

15. Remove the front cover with the following procedure:

a. Loosen the bolts in the reverse order as shown, and remove them.

b. Remove the front cover.

CAUTION:

- **Be careful not to damage the mounting surface.**

16. If the front oil seal needs to be replaced, lift it out with a screwdriver to remove it.

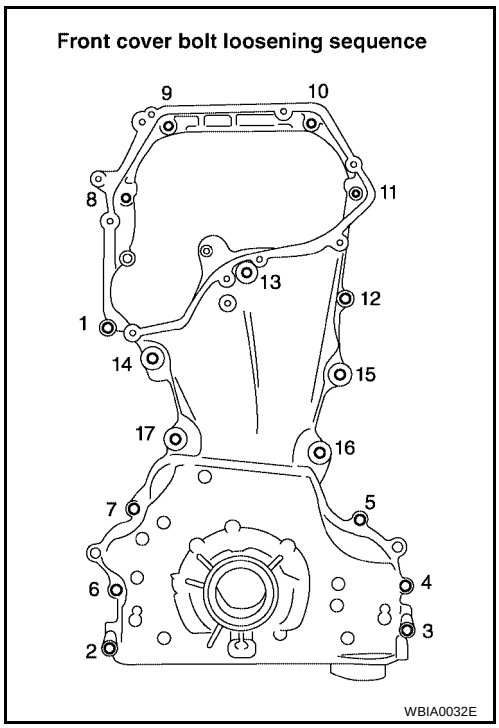

17. Remove timing chain with the following procedure:

a. Push in the tensioner plunger. Insert a stopper pin into the hole on the tensioner body to hold the chain tensioner.
   - Use a wire of 0.5 mm (0.02 in) diameter as a stopper pin.

b. Remove the chain tensioner.

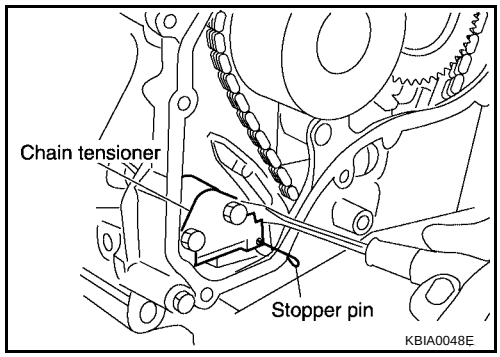

c. Secure hexagonal part of the camshaft with a wrench and loosen the camshaft sprocket bolt and remove the camshaft sprocket for both camshafts.

   CAUTION:
   - **Do not rotate the crankshaft or camshafts while the timing chain is removed. It can cause damage to the valve and piston.**

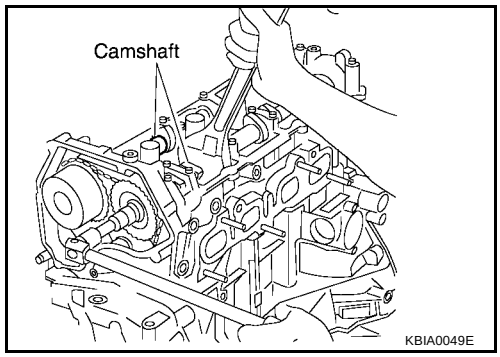

18. Remove the chain slack guide, tension guide, timing chain, and oil pump drive spacer.

19. Remove the timing chain tensioner for the balancer unit with the following procedure:

a. Lift the tensioner lever up, and release the ratchet claw for installation.

b. Push tensioner sleeve in, and hold it.

c. Matching the hole on lever with the one on body, insert a stopper pin to secure tensioner sleeve.

d. Remove the timing chain tensioner for the balancer unit.

20. Remove timing chain for balancer unit and crankshaft sprocket.

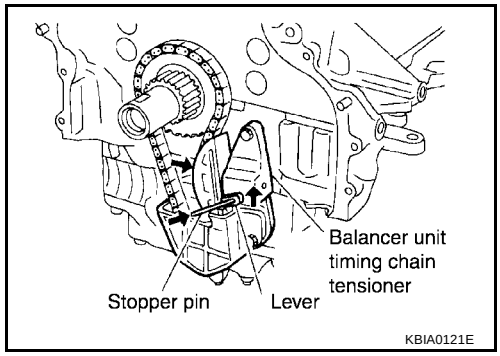

21. Loosen bolts in reverse order as shown, and remove balancer unit.
   - Use Torx socket (size E14)

   CAUTION:
   - **Do not disassemble balancer unit.**

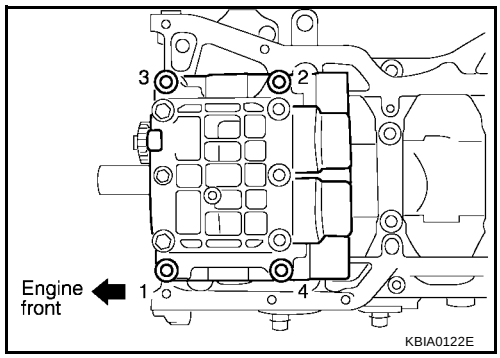

INSPECTION AFTER REMOVAL

Timing Chain

Check the timing chain for cracks or serious wear. If a defect is detected, replace it.

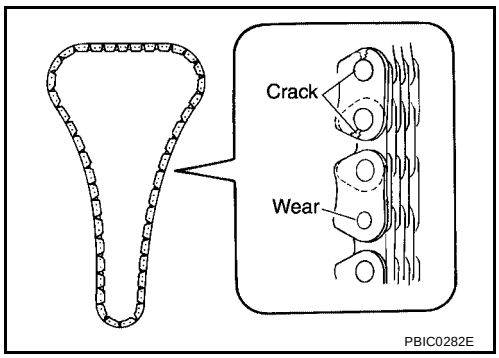

Balancer Unit Bolt Outer Diameter

- Measure outer diameters (d1, d2) at the two positions as shown.
- Measure d2 within the range A.
- If the value difference (d1 - d2) exceeds the limit (a dimension difference is large), replace it with a new one.

Limit : 0.15 mm (0. 0059 in) or more

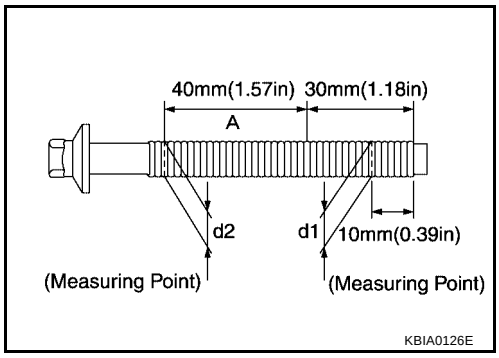

INSTALLATION

NOTE:

- There may be two color variations of the link marks (link colors) on the timing chain.
- There are 26 links between the gold/yellow mating marks on the timing chain; and 64 links between the camshaft sprocket gold/yellow link and the crankshaft sprocket orange/blue link, on the timing chain side without the tensioner.

1. Make sure the crankshaft key points straight up.
2. Install the balancer unit and tighten the bolts in the numerical order as shown:

   CAUTION:
   - **When reusing a bolt, check its outer diameter before installation. Refer to EM-52, "Balancer Unit Bolt Outer Diameter" .**

   Tool number : KV10112100 (BT-8653-A)

   CAUTION:
   - **Check tightening angle with an angle wrench or a protractor. Do not make judgment by visual check alone.**
   - Apply new engine oil to threads and seating surfaces of bolts.

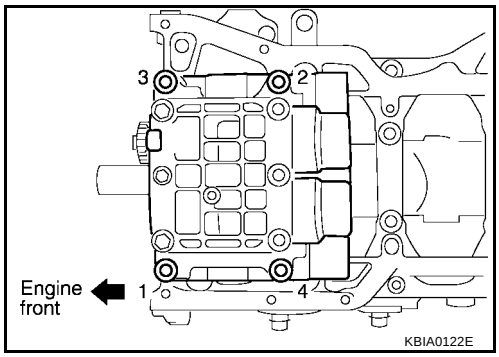

Balancer unit bolts

Step 1	**: 45.2 - 51.0 N·m (4.6 - 5.2 kg-m, 34 - 37 ft-lb)**
Step 2	**: 90° - 95° degrees rotation (Target: 90° degrees)**
Step 3 (Loosen in reverse order or tightening)	**: 0 N·m (0 kg-m, 0 ft-lb)**

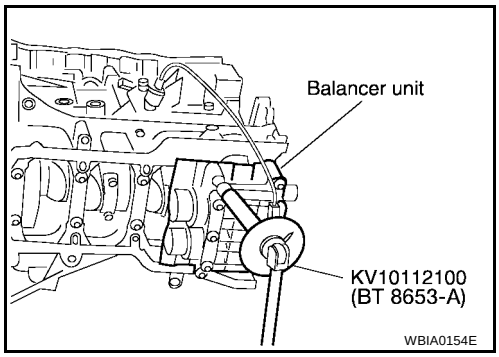

Step 4	**: 45.2 - 51.0 N·m (4.6 - 5.2 kg-m, 34 - 37 ft-lb)**
Step 5	**: 90° - 95° degrees rotation (Target: 90° degrees)**

3. Install the crankshaft sprocket and timing chain for the balancer unit.
   - Make sure that the crankshaft sprocket is positioned with mating marks on the block and sprocket meeting at the top.
   - Install it by lining up mating marks on each sprocket and timing chain.

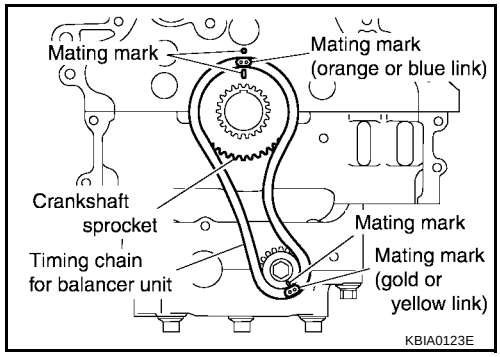

4. Install timing chain tensioner for balancer unit.

   NOTE:
   Chain guide and tensioner move freely with the staking pin as the axle. Therefore, bolt hole position of the three points could be changed during removal. If points change, temporarily tighten the two bolts on the chain guide and move the tensioner to match the bolt holes.
   - Be careful not to let mating marks of each sprocket and timing chain slip.
   - After installation, make sure the mating marks have not slipped, then remove stopper pin and release tensioner.

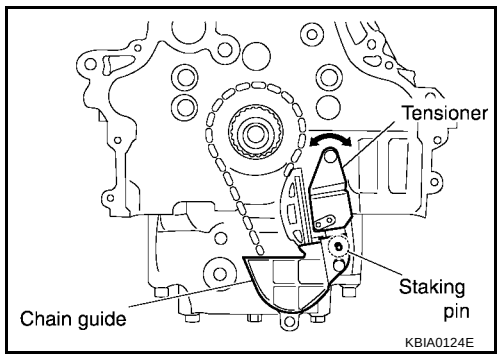

5. Install timing chain and related parts.
   - Install by lining up mating marks on each sprocket and timing chain as shown.

   NOTE:
   Before installing chain tensioner, it is possible to change the position of mating mark on timing chain for that of each sprocket for alignment.

   CAUTION:
   For the above reason, after the mating marks are aligned, keep them aligned by holding them with a hand.
   - Before and after installing chain tensioner, check again to make sure that mating marks have not slipped.
   - After installing chain tensioner, remove stopper pin, and make sure the tensioner moves freely.
   - To avoid skipped teeth, do not move crankshaft and camshaft until front cover is installed.

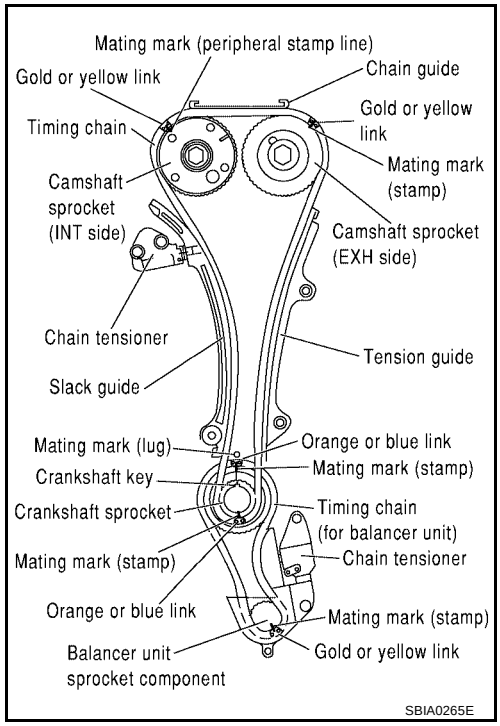

6. Install new front oil seal to front cover, using suitable tool
   - Install new oil seal in until it is flush with front end surface of front cover.

   CAUTION:
   - **Be careful not to cause damage to circumference of oil seal.**

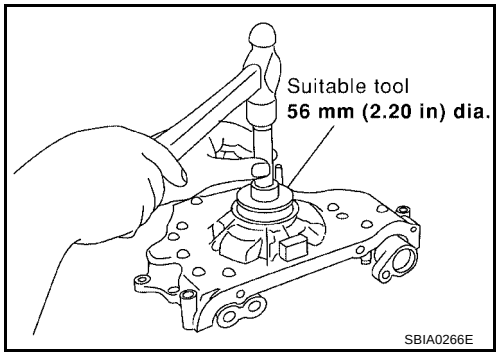

7. Install front cover with the following procedure:

a. Install O-rings to cylinder head and cylinder block.

b. Apply Genuine Silicone RTV Sealant or equivalent, to positions specified in the figure. Refer to GI-45, "RECOMMENDED CHEMICAL PRODUCTS AND SEALANTS" .

c. Make sure the mating marks on the timing chain and each sprocket are still aligned. Then install the front cover.

   CAUTION:
   - **Be careful not to damage the front oil seal during installation with the front end of the crankshaft.**

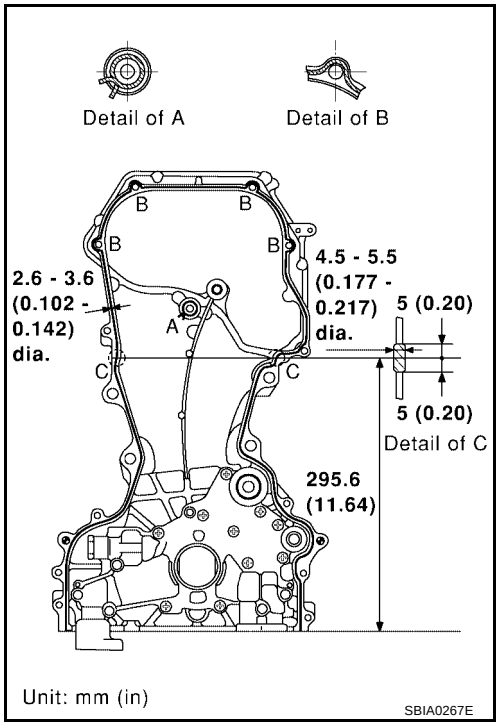

d. Tighten front cover bolts in the numerical order as shown.

e. After all bolts are tightened, retighten them to the specified torque.

   Front cover bolts : 12 - 13 N·m (1.2 - 1.4 kg-m, 9 - 10 ft-lb)

   CAUTION:
   Wipe off any excess sealant leaking at the surface for installing the oil pan.

8. Install the chain guide between the camshaft sprockets.

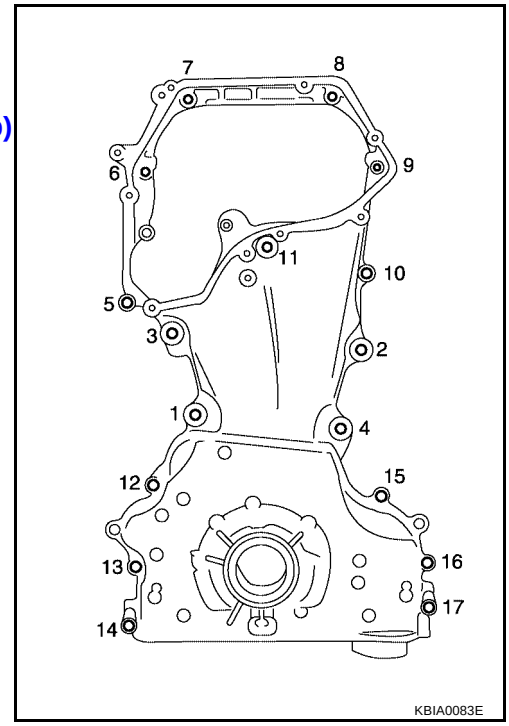

9. Install IVT cover with the following procedure:
a. Install IVT solenoid valves to IVT cover.
b. Install new oil rings to the intake camshaft sprocket insertion points on IVT control cover backside.
c. Install new O-ring to front cover.
d. Apply Silicone RTV Sealant to the IVT cover as shown.
   - Apply Genuine Silicone RTV Sealant or equivalent, to positions specified in the figure. Refer to GI-45, "RECOMMENDED CHEMICAL PRODUCTS AND SEALANTS" .

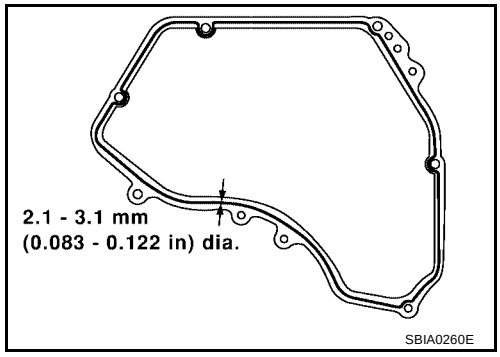

e. Tighten the IVT cover bolts in the numerical order as shown.

IVT cover bolts	**: 12 - 13 N·m (1.2 - 1.4 kg-m, 9-10 in-lb)**

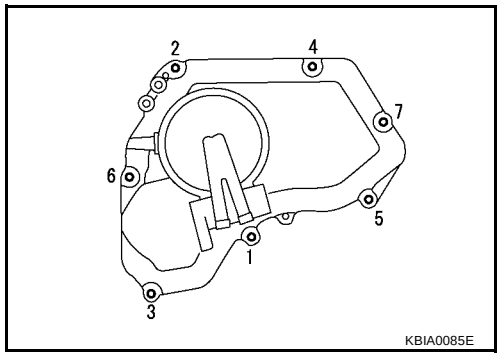

10. Insert crankshaft pulley by aligning with crankshaft key.
   - Tap its center with a plastic hammer to insert.
   - Do not tap the belt hook.
11. Tighten crankshaft pulley bolts.
   - Secure crankshaft pulley with a pulley holder to tighten the bolt.
   - Perform angle tightening with the following procedure:
a. Apply new engine oil to threads and seat surfaces of bolts.
b. Tighten to initial specifications:·

Crankshaft pulley bolt initial tightening : 37.3 - 47.1 N·m (3.8 - 4.8 kg-m, 28 - 34 ft-lb)

c. Apply a paint mark on the front cover, mating with any one of six easy to recognize stamp marks on bolt flange.
d. Turn crankshaft pulley bolt another 60° to 66° degrees [Target: 60° degrees].
   - Check vertical mounting angle with movement of one stamp mark.
12. Installation of the remaining components is in reverse order of removal.

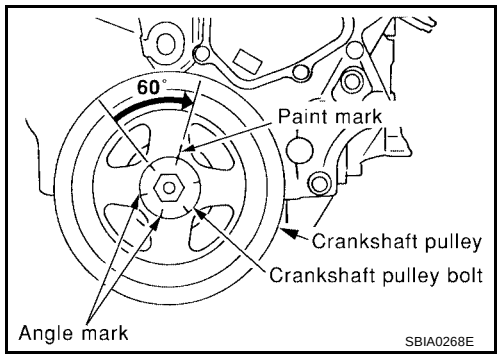

OIL SEAL

PFP:00100

Removal and installation of Valve Oil Seal

EBS00J51

REMOVAL

1. Remove camshaft. Refer to EM-37, "REMOVAL" .
2. Remove valve lifter. Refer to EM-37, "REMOVAL" .
3. Rotate crankshaft, and set piston whose oil seal is to removed to top dead center. This prevents valve from dropping inside cylinder.

   CAUTION:
   When rotating crankshaft, be careful to avoid scarring the front cover with the timing chain.
4. Remove valve collet, valve spring retainer and valve spring using Tool.

   Tool number
   : KV10116200 (J-26336-B)
   : KV10115900 (J-26336-20)

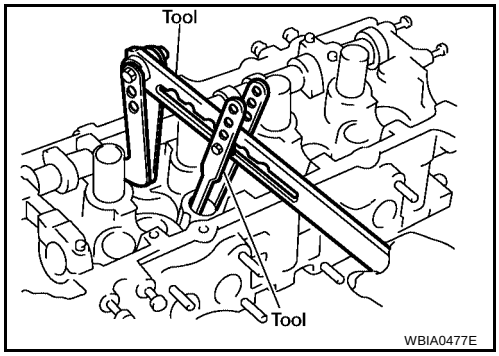

5. Remove valve oil seal using Tool.

   Tool number : KV10107902 (J-38959)

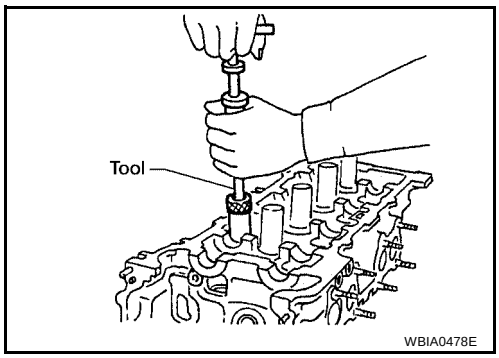

INSTALLATION

1. Apply new engine oil to new valve oil seal joint surface and seal lip.
2. Press in valve oil seal to the position shown using Tool.

   Tool number : KV10115600 (J-38958)

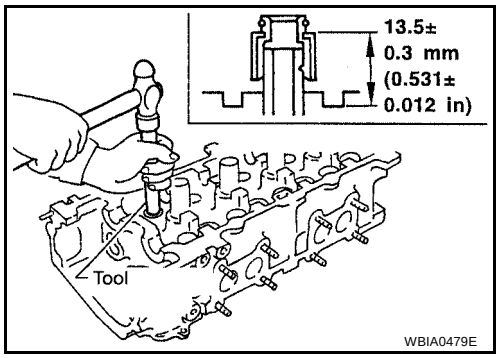

3. Installation of the remaining components in the reverse order of removal.

Removal and Installation of Front Oil Seal

EBS00J52

REMOVAL

1. Remove the following parts:
   - Engine under cover using power tools.
   - Drive belts. Refer to EM-15, "DRIVE BELTS" .
   - Crankshaft pulley. Refer to EM-48, "TIMING CHAIN" .
2. Remove front oil seal from front cover.

   CAUTION:
   Be careful not to scratch front cover.

INSTALLATION

1. Apply new engine oil to new oil seal and install it using a suitable tool.

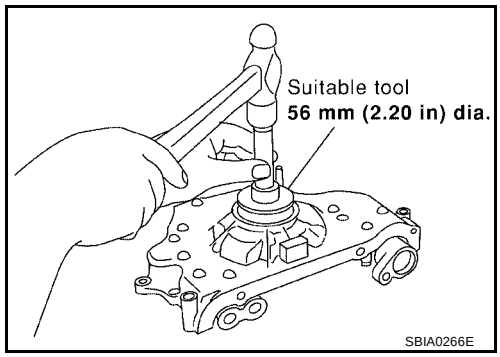

   - Install new oil seal in the direction shown.

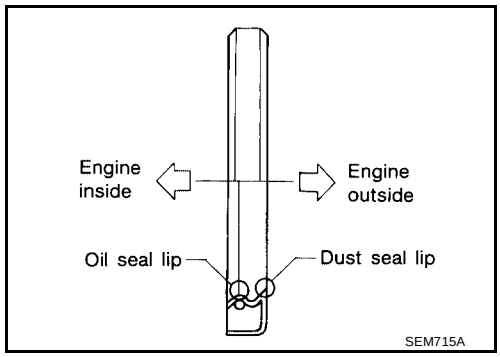

2. Installation of the remaining components is in reverse order of removal.

Removal and Installation of Rear Oil Seal

EBS00J53

REMOVAL

1. Remove the transaxle. Refer to MT-17, "Removal and Installation" (M/T), AT-275, "REMOVAL AND INSTALLATION" (A/T).
2. Remove flywheel (MT) or drive plate (AT).
3. Remove rear oil seal using suitable tool.

   CAUTION:
   Be careful not to scratch rear oil seal retainer.

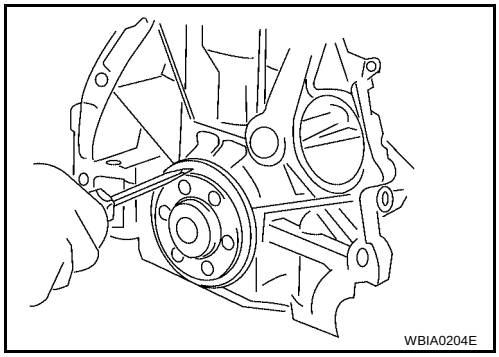

INSTALLATION

1. Apply new engine oil to new oil seal and install it using a suitable drift.
   - Install new oil seal in the direction shown.

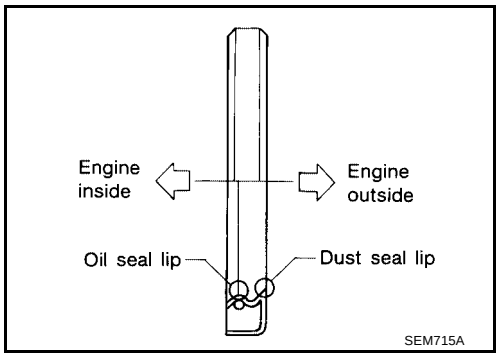

   - Press fit new oil seal straight using a suitable drift, to avoid causing burrs or tilting.

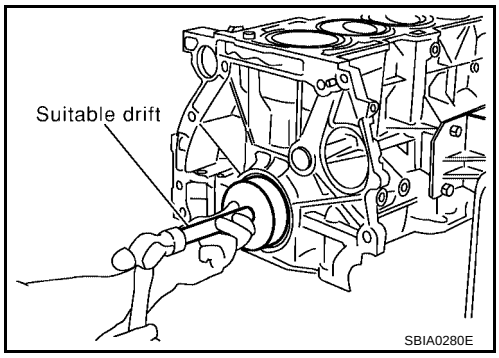

   - Press in the new oil seal to the specified depth as shown.

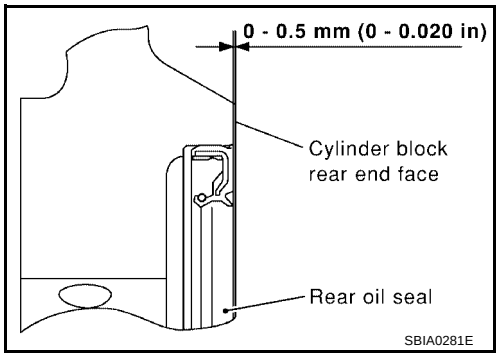

2. Installation of the remaining components in reverse order of removal.

CYLINDER HEAD

PFP:11041

On-Vehicle Service

EBS00J54

CHECKING COMPRESSION PRESSURE

1. Warm up the engine to full operating temperature.
2. Release the fuel pressure. Refer to EC-84, "FUEL PRESSURE RELEASE" .
3. Remove the ignition coil and spark plug from each cylinder.
   Refer to EM-30, "Removal and Installation" .
4. Connect engine tachometer (not required in use of CONSULT-II).
5. Disconnect the fuel injector harness connector to avoid any residual fuel injection during the measurement.
6. Install the compression tester with the adapter into the spark plug hole.

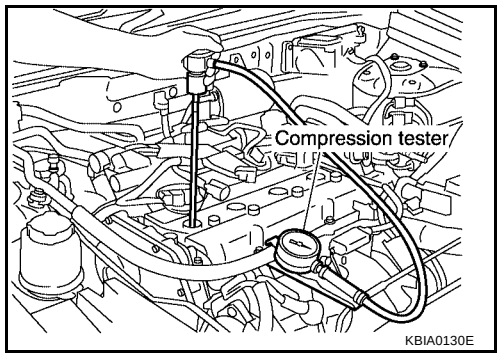

- Use compression gauge whose picking up end inserted to spark plug hole is smaller than 20 mm (0.79 in) in diameter. Otherwise, it may be caught by cylinder head during removal.

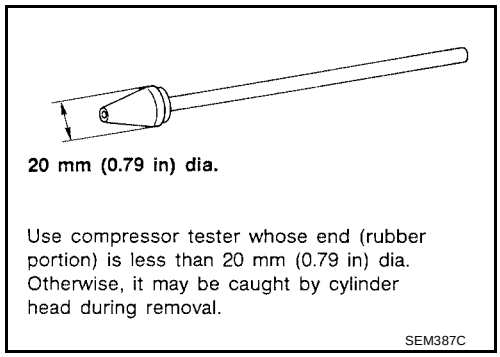

7. With the accelerator pedal fully depressed, turn the ignition switch to the “START” position to crank over the engine. When the gauge pointer stabilizes, read the compression pressure and engine rpm. Perform these steps to check each cylinder.

Unit: kPa (kg/cm^2 , psi) / rpm

Standard	Minimum	Difference limit between cylinders
1,250 (12.8, 181.3) / 250	1,060 (10.8, 153.7) / 250	100 (1.0, 14) / 250

CAUTION:
Always use a fully charged battery to obtain specified engine cranking speed.

- If the engine speed is out of specified rpm range, check the battery. Check engine speed again with a fully charged battery.
- If compression pressure is below minimum value, check valve clearances and parts associated with combustion chamber (valve, valve seat, piston, piston ring, cylinder bore, cylinder head, cylinder head gasket). After the checking, measure compression pressure again.
- If some cylinders have low compression pressure, pour small amount of engine oil into the spark plug hole of the cylinder to re-check it for compression.
- If the added engine oil improves the compression, the piston rings may be worn or damaged. Check the piston rings and replace if necessary.
- If the compression pressure remains at low level despite the addition of engine oil, the valves may be malfunctioning. Check the valves for damage. Replace the valve or valve seat accordingly.

- If two adjacent cylinders have respectively low compression pressure and their compression remains low even after the addition of engine oil, the head gasket is leaking. In such a case, replace the cylinder head gasket.

8. Install spark plug, ignition coil and harness connectors.

Removal and Installation

EBS00J55

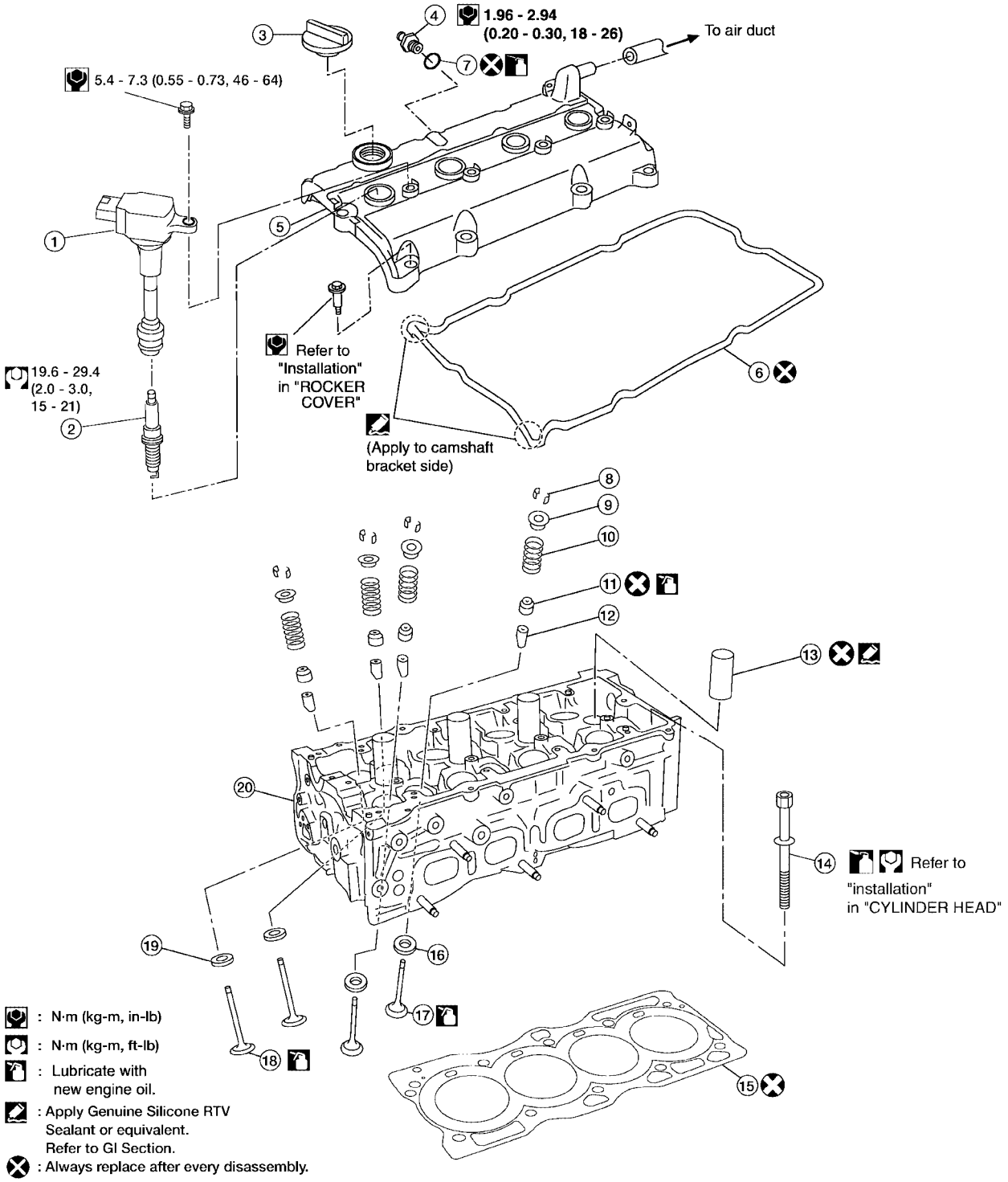

WBIA0225E

1. Ignition coil	2. Spark plug	3. Oil filler cap
4. PCV valve	5. Rocker cover	6. Rocker cover gasket
7. O-ring	8. Valve collet	9. Valve spring retainer
10. Valve spring	11. Valve oil seal	12. Valve guide
13. Spark plug tube	14. Cylinder head bolt	15. Cylinder head gasket

16. Valve seat (EXH)
17. Valve (EXH)
18. Valve (INT)
19. Valve seat (INT)
20. Cylinder head

REMOVAL

1. Remove the timing chain. Refer to EM-48, "Removal and Installation" .
2. Remove the camshafts. Refer to EM-37, "CAMSHAFT" .
3. Remove spark plugs. Refer to EM-30, "Removal and Installation" .
4. Remove the front suspension member refer to FSU-15, "FRONT SUSPENSION MEMBER" .
5. Position the power steering pump and reservoir aside.
6. Disconnect the A/C compressor and position it out of the way with wire.
7. Remove cylinder head loosening bolts in the order as shown, using power tool.
8. If necessary to transfer to new cylinder head or remove for reconditioning, remove the intake manifold collector, intake manifold, and fuel tube assembly. Refer to EM-64, "Disassembly and Assembly" .

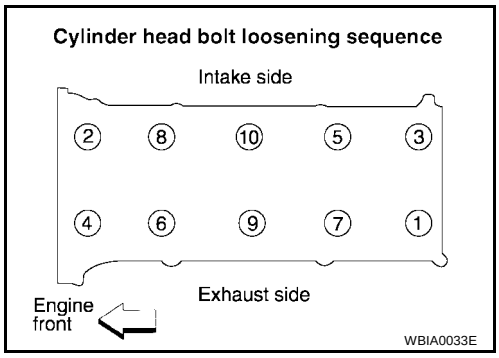

INSPECTION AFTER REMOVAL

Outer Diameter of Cylinder Head Bolts

- Cylinder head bolts are tightened by plastic zone tightening method. Whenever the size difference between d1 and d2 exceeds the limit, replace the bolts with new ones.

  Limit (d1 - d2) : 0.23 mm (0.0091 in) or less

- If reduction of outer diameter appears in a position other than d2, use it as d2 point.

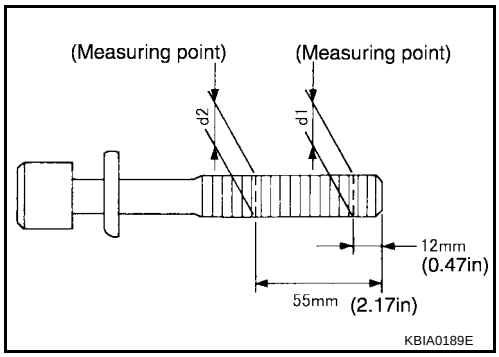

INSTALLATION

1. Install a new cylinder head gasket.

2. Follow the steps below to tighten the cylinder head bolts in the numerical order as shown.

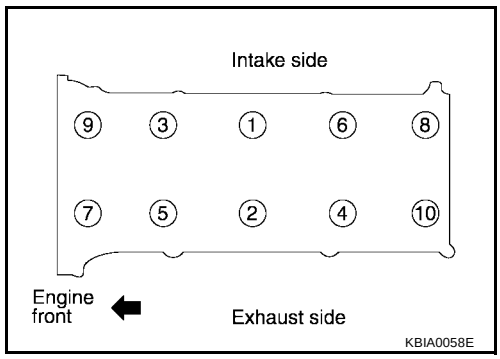

CAUTION:

- **If cylinder head bolts are re-used, check their outer diameters before installation. Refer to EM-62, "Outer Diameter of Cylinder Head Bolts" .**

Step a	**: 98.1 N·m (10 kg-m, 72 ft-lb)**
Step b	**: Loosen to 0 N·m in the reverse order of tightening.**
Step c	**: 39.2 N·m (4.0 kg-m, 29 ft-lb)**
Step d	**: 75° clockwise**
Step e	**: 75° clockwise**

- Apply new engine oil to the threads and the seating surfaces of bolts.

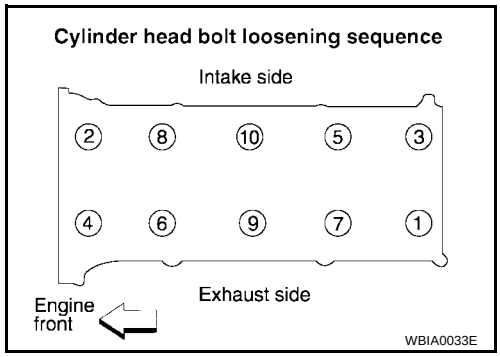

CAUTION:

Check and confirm the tightening angle by using angle wrench or protractor. Avoid judgment by visual inspection without the tool.

Tool number : KV10112100 (BT-8653-A)

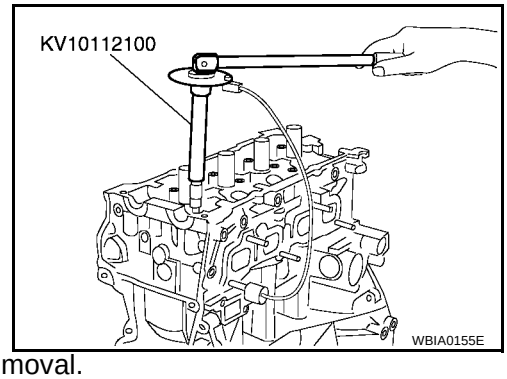

3. Installation of the remaining components is in reverse order of removal.

Disassembly and Assembly

EBS00J56

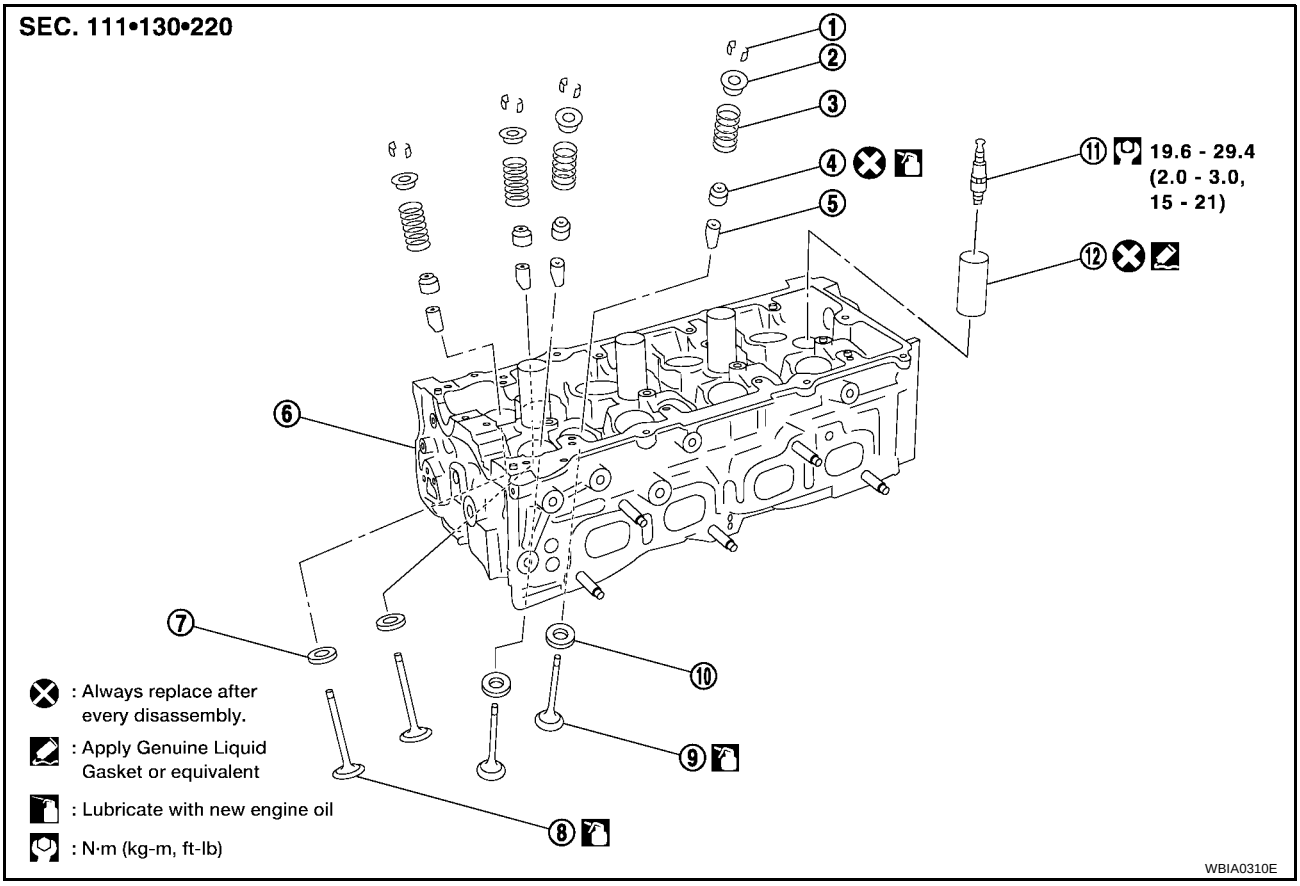

1. Valve collet	2. Valve spring retainer	3. Valve spring (with valve spring seat)
4. Valve oil seal	5. Valve guide	6. Cylinder head
7. Valve seat (INT)	8. valve (INT)	9. Valve (EXH)
10. Valve seat (EXH)	11. Spark plug	12. Spark plug tube

CAUTION:

- **When installing camshafts, chain tensioners, oil seals or other sliding parts, lubricate contacting surfaces with new engine oil.**
- **Apply new engine oil to threads and seat surfaces when installing the cylinder head, camshaft sprocket, crankshaft pulley and camshaft bracket.**
- **Attach tags to valve lifters so all parts are assembled in their original position.**

DISASSEMBLY

1. Remove the valve lifter.
   - Confirm installation point.
2. Remove the valve collet, valve spring retainer and valve spring using Tool.

   Tool number : KV10116200 (J-26336-B)
   : KV10115900 (J-26336-20)

   CAUTION:
   Do not remove valve spring seat from valve spring.

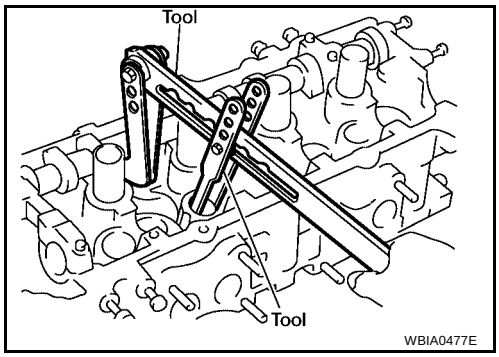

3. Push valve stem to combustion chamber side, and remove valve.
   - Inspect valve guide clearance before removal. Refer to EM-66, "VALVE GUIDE CLEARANCE" .
   - Confirm installation point.
4. Remove valve oil seal using Tool.

Tool number : KV10107902 (J-38959)

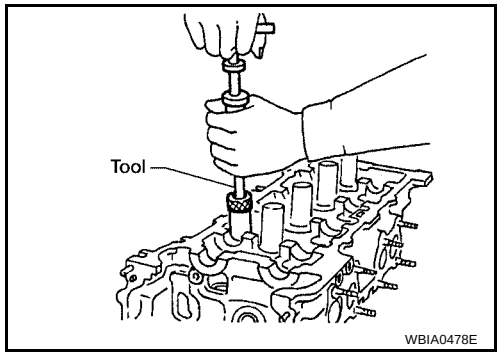

5. When valve seat must be replaced, refer to EM-68, "VALVE SEAT REPLACEMENT" .
6. When valve guide must be replaced, refer to EM-66, "VALVE GUIDE REPLACEMENT" .
7. Remove spark plug using suitable tool.
8. Remove spark plug tubes, if necessary using suitable tool.

CAUTION:
- **Be careful not to damage cylinder head.**
- **Do not remove spark plug tube if not necessary. Once removed, the spark plug tube cannot be reused because of deformation.**

ASSEMBLY

1. Install valve guide. Refer to EM-66, "VALVE GUIDE REPLACEMENT" .
2. Install valve seat. Refer to EM-68, "VALVE SEAT REPLACEMENT" .
3. Install new valve oil seal using Tool.

Tool number : KV10115600 (J-38958)

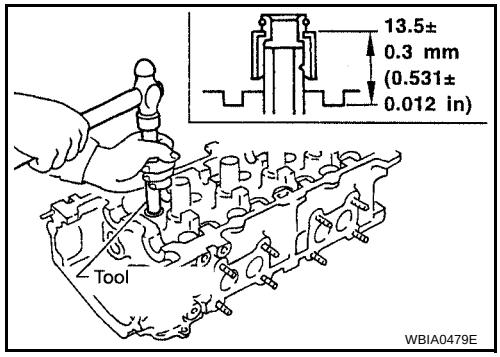

4. Install valve.
   - Install larger diameter to intake side.

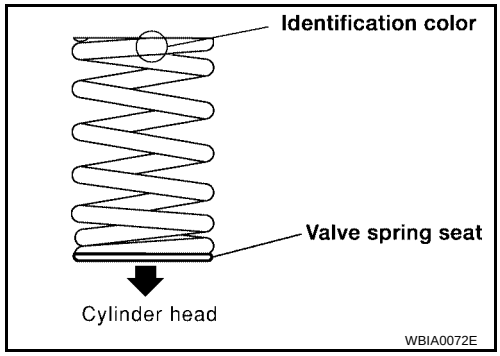

5. Install valve spring.
   - Install smaller pitch (valve spring seat side) to cylinder head side.
   - Confirm the identification color of the valve spring:
     Intake: blue
     Exhaust: yellow
6. Install valve spring retainer.
7. Install valve collet using Tool.
   - Compress valve spring with valve spring compressor. Install valve collet with magnet hand.
   - Tap stem edge lightly with plastic hammer after installation to check its installed condition.
8. Install valve lifter.
9. Install spark plug tube.

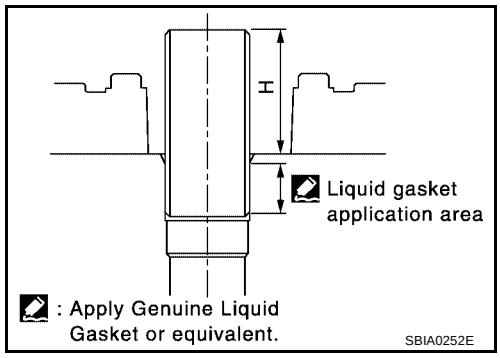

a. Remove old liquid gasket from cylinder head side mounting hole.
b. Apply liquid gasket all around on spark plug tube with a 12 mm (0.47 in) width from edge of spark plug tube on the press fit side.
   - Use Genuine Anaerobic Liquid Gasket or equivalent. Refer to MA-12, "RECOMMENDED FLUIDS AND LUBRICANTS" .
c. Press fit spark plug tube so that height is to ″H″ as shown.

Press fit height ″H″ standard value	**: 38.55 - 38.65 mm (1.518 - 1.522 in)**

CAUTION:
- **When press fitting be careful not to deform spark plug tube.**
- **After press fitting, wipe off any protruding liquid gasket on top surface of cylinder head.**

10. Install spark plug using suitable tool.

Inspection After Disassembly

EBS00J57

CYLINDER HEAD DISTORTION

1. Wipe off oil and remove water scale deposits, old gasket, old sealer, and carbon with a scraper.

   CAUTION:
   Use care not to allow gasket debris to enter passages for oil or water.

2. At each of several locations on bottom surface of cylinder head, measure distortion in six directions.

   Limit : 0.1 mm (0.004 in) or less

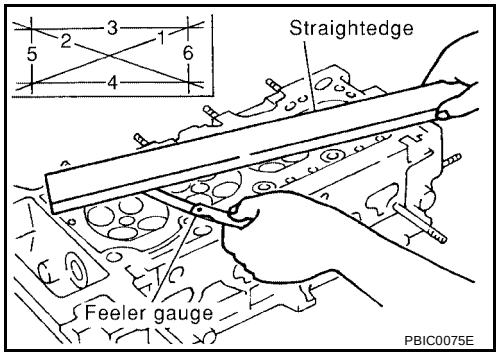

VALVE DIMENSIONS

Check dimensions of each valve. Refer to EM-100, "VALVE" .

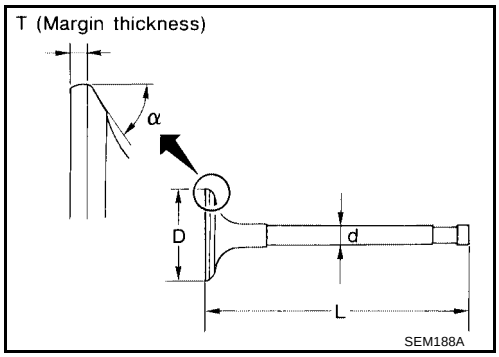

VALVE GUIDE CLEARANCE

Perform this inspection before removing the valve guide.

1. Make sure that the valve stem diameter is within the specification.
2. Push the valve out by approximately 15 mm (0.59 in) toward the combustion chamber side to measure the valve's run-out volume (in the direction of dial gauge) with dial gauge.
3. Half of the run-out volume accounts for the valve guide clearance.

Intake valve clearance	**: 0.020 - 0.053 mm (0.0008 - 0.0021 in) or less**
Exhaust valve clearance	**: 0.030 - 0.063 mm (0.0012 - 0.0025 in) or less**

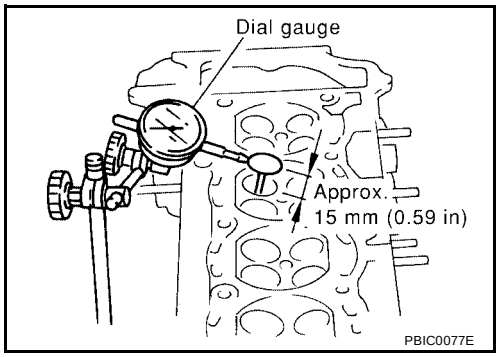

VALVE GUIDE REPLACEMENT

When valve guide is removed, replace with oversized (0.2 mm, 0.008 in) valve guide.

1. To remove valve guide, heat cylinder head to 110° to 130°C (230° to 266°F) by soaking in heated oil.

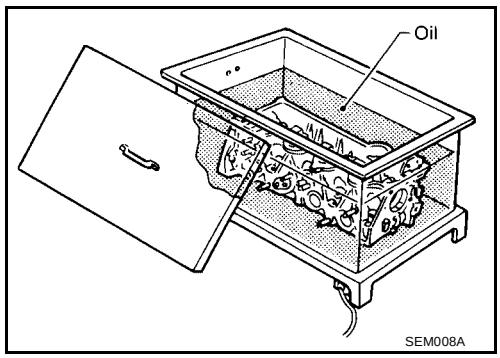

2. Drive out valve guide with a press [under a 20 kN (2.2 ton-force) pressure] or hammer and suitable tool.

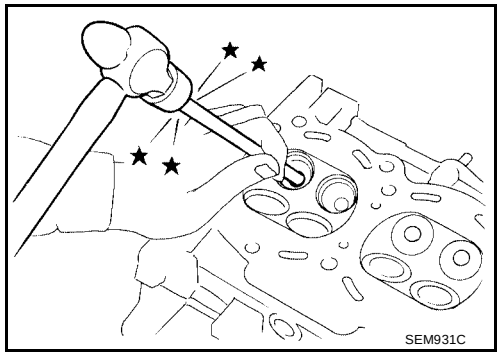

3. Ream cylinder head valve guide hole using suitable reamer.

Intake and exhaust valve guide hole diameter (Service)	**: 10.175 - 10.196 mm (0.4006 - 0.4014 in)**

4. Heat cylinder head to 110° to 130°C (230° to 266°F) by soaking in heated oil.

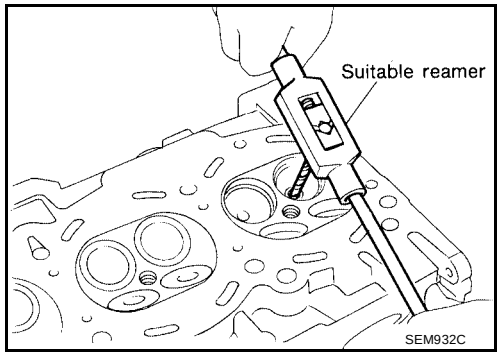

5. Press valve guide from camshaft side to dimensions as shown.

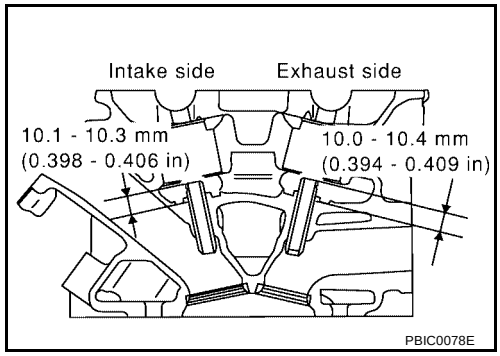

6. Apply finish to valve guide using suitable reamer.

   Intake and exhaust : 6.000 - 6.018 mm (0.2362 - 0.2369 in)

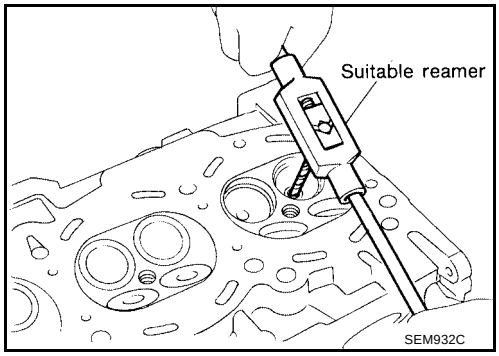

VALVE SEAT CONTACT

NOTE:
After confirming that the dimensions of valve guides and valves are within specifications, perform this procedure:

- Apply prussian blue (or white lead) onto contacting surface of valve seat to check the condition of the valve contact on the seat surface.
- Check if the contact area band is continuous all around the circumference.
- If not, grind to adjust valve fitting and check again. If the contacting surface still has NG conditions even after the re-check, replace the valve seat.

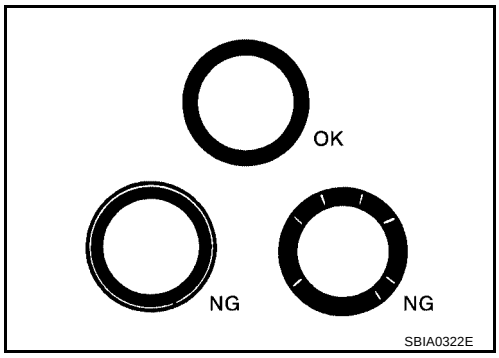

VALVE SEAT REPLACEMENT

NOTE:
When valve seat is removed, replace with an oversized [0.5 mm (0.020 in)] valve seat.

1. Bore out old seat until it collapses. Boring should not continue beyond the bottom face of the seat recess in the cylinder head. Set the machine depth stop to ensure this.
2. Ream cylinder head recess diameter for service valve seat.

   Intake : 37.000 - 37.016 mm (1.4567 - 1.4573 in)
   Exhaust : 32.000 - 32.016 mm (1.2598 - 1.2605 in)

   - Be sure to ream in circles concentric to the valve guide center. This will enable the valve seat to fit correctly.

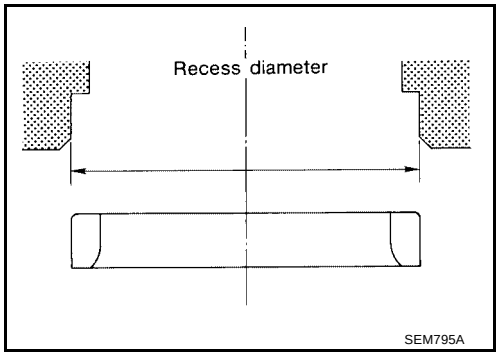

3. Heat cylinder head to 110° to 130°C (230° to 266°F) by soaking in heated oil.

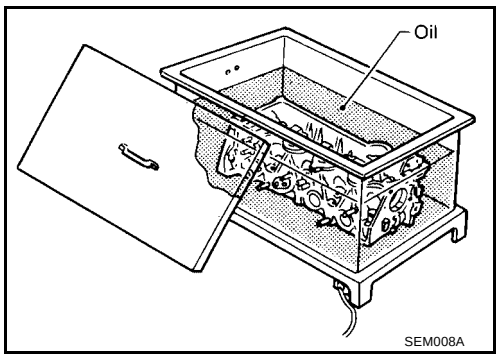

4. Use valve seats cooled well with dry ice. Force fit valve seat into cylinder head.

   CAUTION:
   Avoid directly touching the cold valve seats.

5. Finish the seat to the specified dimensions using suitable tool.

CAUTION:
When using valve seat cutter, firmly grip the cutter handle with both hands. Then, press on the contacting surface all around the circumference to cut in a single drive. Improper pressure on the cutter or cutting many different times may result in a defective valve seat.

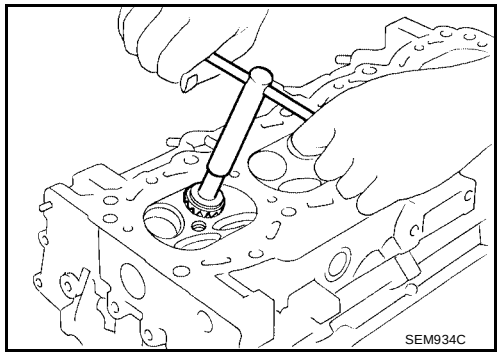

Grind to obtain the dimensions indicated as shown.

Standard

D1 dia.	**: 33.5 mm (1.3189 in)**
D2 dia.	**: 35.1 - 35.3 mm (1.382 - 1.390 in)**
D3 dia.	**: 39.0 - 39.2 mm (1.535 - 1.543 in)**
D4 dia.	**: 28 mm (1.10 in)**
D5 dia.	**: 29.9 - 30.1 mm (1.177- 1.185 in)**
D6 dia.	**: 33.5 - 33.7 mm (1.319 - 1.327 in)**

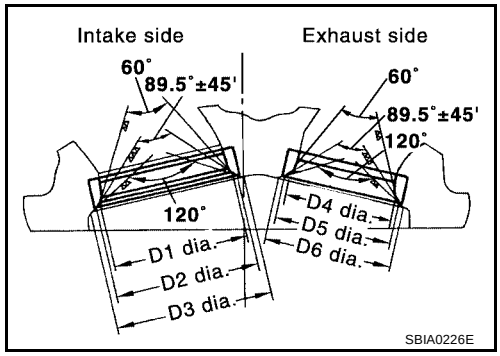

6. Using compound, grind to adjust valve fitting.
7. Check again for normal contact.

VALVE SPRING SQUARENESS

Set try square along the side of the valve spring and rotate the spring. Measure the maximum clearance between the top face of the spring and the try square.

Limit : 1.9 mm (0.0748 in)

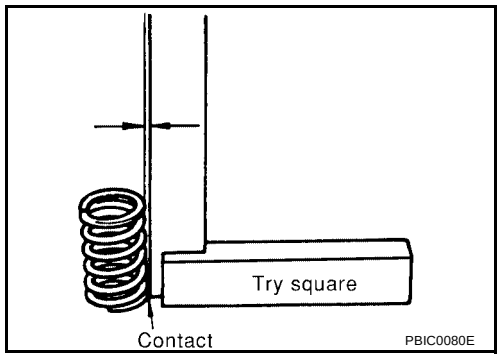

VALVE SPRING DIMENSIONS AND VALVE SPRING PRESSURE LOAD

Check valve spring pressure with valve spring seat installed at specified spring height. Replace if not within specifications.

CAUTION:
Do not remove the valve spring seat.

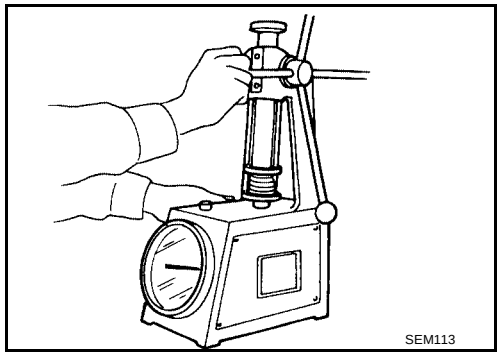

STANDARD	INTAKE (identification color: blue)	EXHAUST (identification color: yellow)
Free height	44.84 - 45.34 mm (1.7654 - 1.7850 in)	45.28 - 45.78 mm (1.7827 - 1.8024 in)
Installation height	35.30 mm (1.390 in)	35.30 mm (1.390)
Installation load	151 - 175 Nm (15.4 - 17.8 kg-force, 34 - 39 lb-force)	151 - 175 Nm (15.4 - 17.8 kg-force, 34 - 39 lb-force)
Height during valve open	24.94 mm (0.9819 in)	26.39 mm (1.0390 in)
Load with valve open	358 - 408 N (36.5 - 41.6 kg-force, 80 - 92 lb-force)	325 - 371 N (33.1 - 37.8 kg-force, 73-83 lb-force)

ENGINE ASSEMBLY

PFP:10001

Removal and Installation

EBS00J58

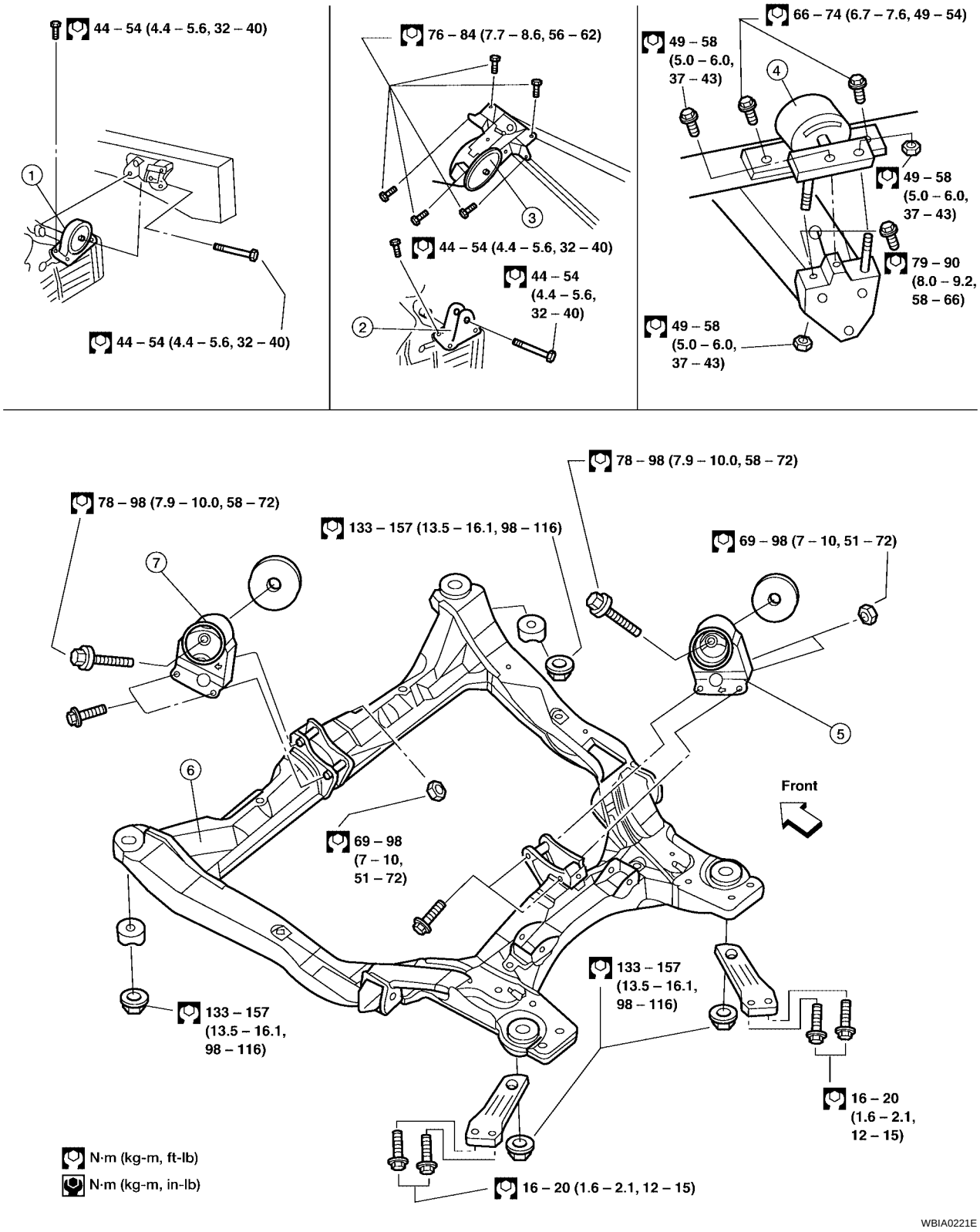

1. LH transaxle mounting insulator (A/T)
2. LH transaxle mounting bracket (M/T)
3. LH transaxle mounting insulator (M/T)
4. RH engine mounting insulator
5. Rear engine mounting insulator (orient by direction mark)
6. Front suspension member
7. Front engine mounting insulator (orient by direction mark)

WARNING:

- **Place chocks at the front and back of the rear wheels.**
- **For engines not equipped with slingers, attach proper slingers and bolts as described in the parts catalog.**

CAUTION:

- **Do not start working until the exhaust system and coolant are cool.**
- **If items or work required are not covered by the engine main body section, refer to the applicable sections.**
- **Use the correct supporting points for lifting and jacking. Refer to GI-40, "LIFTING POINT" .**
- **In removing the drive shaft, be careful not to damage the grease seals on the transaxle.**
- **Before separating the engine and transaxle, remove the crankshaft position sensor (POS) from the assembly.**
- **Be sure not to damage the edge of the crankshaft position sensor (POS) or the ring gear teeth.**

REMOVAL

1. Release fuel pressure. Refer to EC-84, "FUEL PRESSURE RELEASE" .
2. Disconnect the fuel rail at the fuel hose quick connector (engine side). Refer to EM-19, "INTAKE MANIFOLD" .
3. Drain the engine oil. Refer to MA-18, "Changing Engine Oil" .
4. Drain the engine coolant. Refer to CO-10, "DRAINING ENGINE COOLANT" .
5. Remove the engine hood assembly. Refer to BL-14, "Removal and Installation of Hood Assembly" .
6. Remove the battery, battery hold downs, and battery tray.
7. Disconnect the engine room harness from the engine side and position it aside. Disconnect the engine harness ground connections. Access the connector through the glove box opening.
8. Disconnect the MAF sensor electrical connector.
9. Remove the air duct and air cleaner case assembly. Refer to EM-17, "Removal and Installation" .
10. Disconnect the heater hoses.
11. Remove engine cover using power tool.
12. Remove the engine coolant reservoir tank, radiator and radiator fan assembly. Refer to CO-13, "Removal and Installation" .
13. Disconnect and set aside the IPDM/ER and remove the IPDM/ER bracket. Refer to PG-28, "Removal and Installation of IPDM E/R" .
14. Remove the generator. Refer to SC-28, "Removal" .
15. Remove the engine under covers and splash shield using power tool.
16. Dismount the A/C compressor with piping connected and secure with wire to the radiator support.
17. Disconnect the engine wiring harness retainers and ground strap.
18. Remove clutch operating cylinder from transaxle, and move it aside (M/T models).
19. Disconnect the transaxle shift controls.
20. Remove front exhaust tube. Refer to EX-4, "Removal and Installation" .
21. Remove the left and right drive shafts. Refer to FAX-11, "Removal and Installation" .
22. Remove the front suspension member. Refer to FSU-15, "Removal and Installation" .
23. Dismount the power steering pump with piping connected and position it aside with wire.
24. Install engine slingers into front left cylinder head and rear right cylinder head.
    - Use alternator bracket bolt holes for the front slinger.
    - Use the proper slingers and bolts as described in the Parts Catalog.

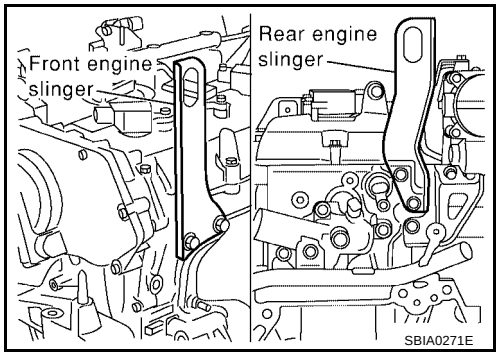

Slinger bolts - front	**: 51.0 - 64.7 N·m (5.2 - 6.5 kg-m, 38 - 47 ft-lb)**
Slinger bolts - rear	**: 24.5 - 31.4 N·m (2.5 - 3.2 kg-m, 18 - 23 ft-lb)**

25. Support engine and transaxle assembly with engine lifting equipment from the top with the vehicle raised on a hoist.
26. Remove RH engine mounting insulator and bracket.
27. Remove LH transaxle mounting insulator through-bolts.
28. Lower the engine and transaxle assembly from the engine compartment using Tool.

CAUTION:

- **Before and during this procedure, always check if any harnesses are left connected.**
- **Avoid any damage to, or any oil/grease smearing or spills onto the engine mounting insulators.**

Tool number : — (J-47242)

29. Remove the starter motor. Refer to SC-17, "Removal and Installation" .
30. Separate engine and transaxle.

INSTALLATION

Installation is in the reverse order of removal.

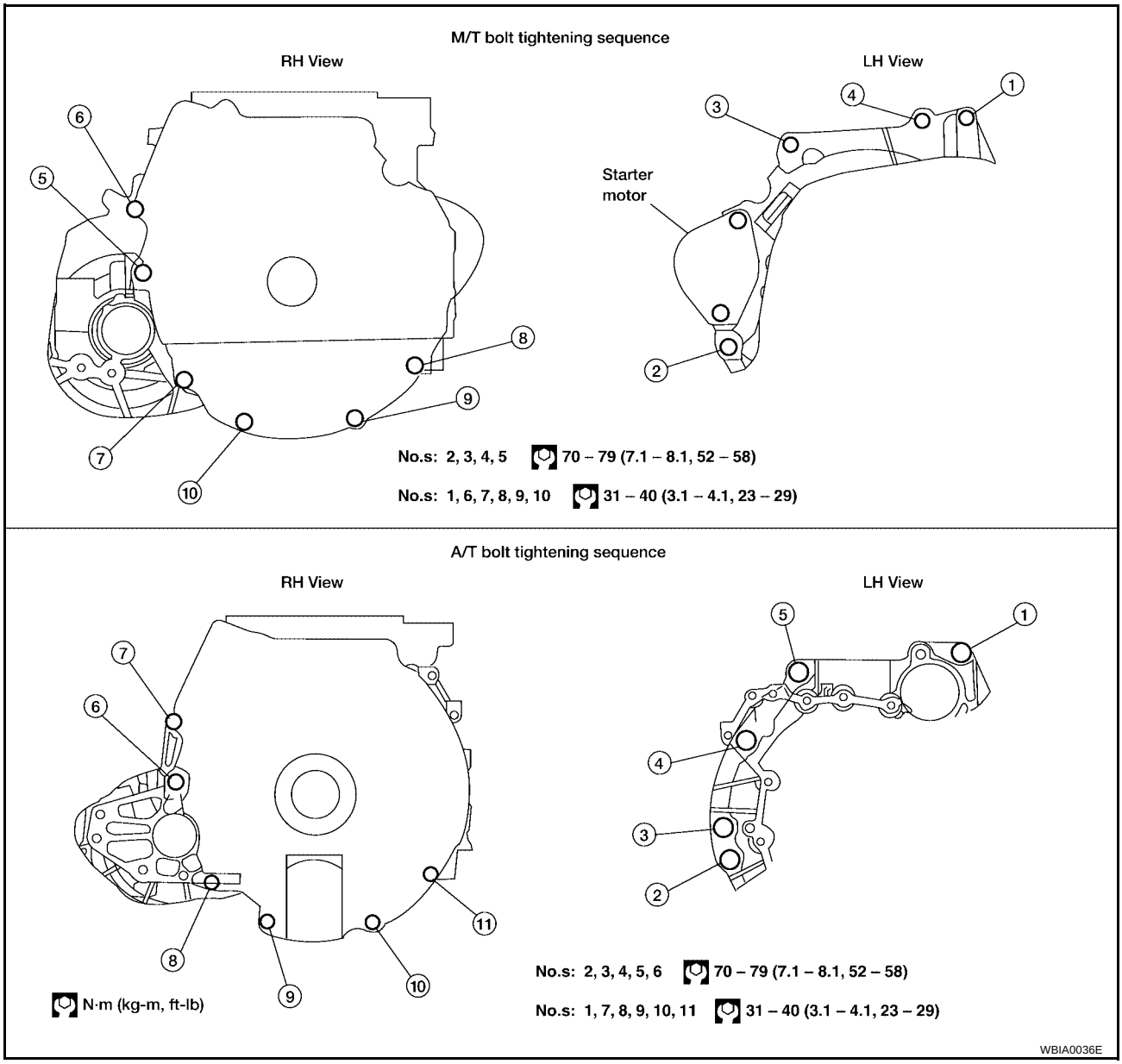

- Do not allow oil to get on mounting insulators. Be careful not to damage mounting insulators.
- If parts have a direction mark (arrow) this indicates front of the vehicle, and the parts must be installed according to the identification mark.

INSPECTION AFTER INSTALLATION

- Before starting engine, check oil/fluid levels including engine coolant and engine oil. If less than required quantity, fill to the specified level. Refer to MA-12, "RECOMMENDED FLUIDS AND LUBRICANTS" .
- Use procedure below to check for fuel leakage.
- Turn ignition switch ON (with engine stopped). With fuel pressure applied to fuel piping, check for fuel leakage at connection points.
- Start engine. With engine speed increased, check again for fuel leakage at connection points.
- Run engine to check for unusual noise and vibration.
- Warm up engine thoroughly to make sure there is no leakage of fuel, exhaust gas, or any oils/fluids including engine oil and engine coolant.
- Bleed air from passages in lines and hoses, such as in cooling system.
- After cooling down engine, again check oils/fluids including engine oil and engine coolant. Refill to specified level, if necessary.
- Summary of the inspection items:

Item	Before starting engine	Engine running	After engine stopped
Engine coolant	Level	Leakage	Level
Engine oil	Level	Leakage	Level
Other oils and fluids*	Level	Leakage	Level
Fuel	Leakage	Leakage	Leakage
Exhaust gas	—	Leakage	—

*Transmission/transaxle/CVT fluid, power steering fluid, brake fluid, etc.

CYLINDER BLOCK

PFP:11010

Disassembly and Assembly

EBS00J59

SEC.110 • 120 • 221 • 226

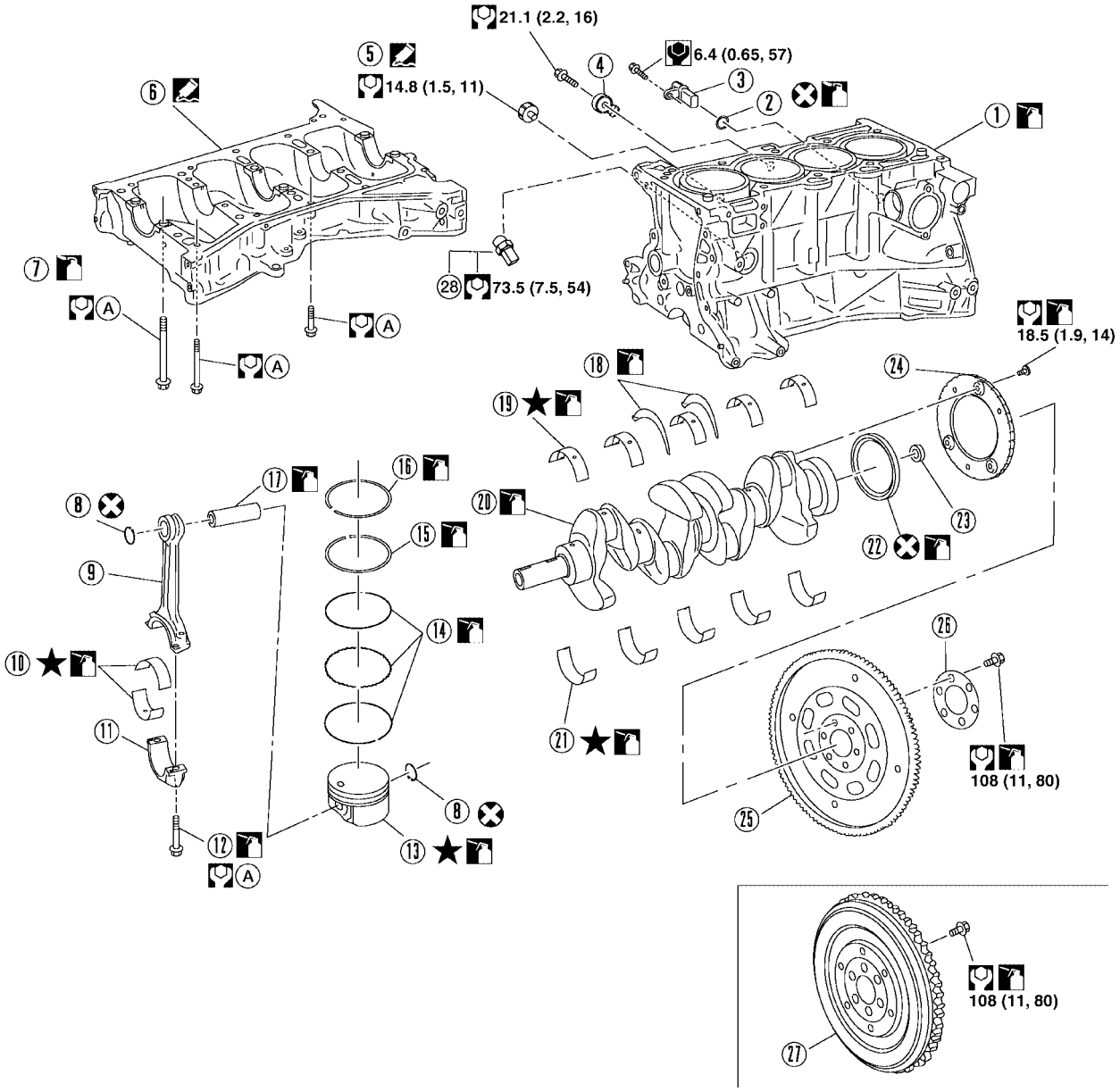

WBIA0717E

1. Cylinder block
2. O-ring
3. Crankshaft position sensor (POS)
4. Knock sensor
5. Oil pressure switch
6. Lower cylinder block
7. Lower cylinder block bolt
8. Snap ring
9. Connecting rod
10. Connecting rod bearing
11. Connecting rod bearing cap
12. Connecting rod bearing cap bolt
13. Piston
14. Oil ring
15. Second ring
16. Top ring
17. Piston pin
18. Main thrust bearing
19. Main bearing upper
20. Crankshaft
21. Main bearing lower
22. Crankshaft rear oil seal
23. Pilot converter (A/T only)
24. Crankshaft signal plate
25. Drive plate
26. Reinforcement plate
27. Flywheel (M/T)
28. Cylinder block heater (if equipped)

A. Refer to text.

CAUTION:
Apply new engine oil to parts marked in illustration before installation.

DISASSEMBLY

1. Remove the engine and transaxle as an assembly from the vehicle, and separate the transaxle from the engine. Refer to EM-71, "Removal and Installation" .
2. Mount the engine on a suitable engine stand.
3. Drain any remaining engine oil and coolant from the engine.
4. Remove the following components and associated parts.
   - Exhaust manifold and three way catalyst assembly. Refer to EM-24, "Removal and Installation" .
   - Intake manifold collector. Refer to EM-19, "Removal and Installation" .
   - Intake manifold and fuel tube assembly. Refer to EM-19, "Removal and Installation" .
   - Ignition coils. Refer to EM-29, "Removal and Installation" .
   - Rocker cover. Refer to EM-35, "Removal and Installation" .
   - Front cover, timing chain, and balancer unit. Refer to EM-48, "Removal and Installation" .
   - Cylinder head. Refer to EM-61, "Removal and Installation" .
5. Remove the knock sensor.

   CAUTION:
   Carefully handle the sensor and do not drop the sensor.
6. Remove crankshaft position sensor (POS).

   CAUTION:
   - **Avoid impacts such as a dropping.**
   - **Do not disassemble.**
   - **Keep it away from metal particles.**
   - **Do not place sensor close to magnetic materials.**

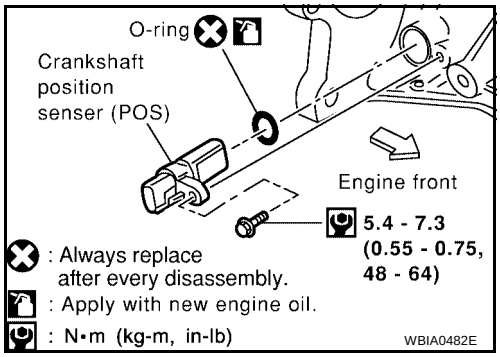

7. Remove the flywheel (M/T models) or drive plate (A/T models). Hold the crankshaft with a stopper plate and use a suitable tool to remove the bolts.

   CAUTION:
   - **Be careful not to damage the flywheel contact surface for the clutch disc.**

   NOTE:
   - The flywheel two-block construction allows movement in response to transmission side pressure, or when twisted in its rotational direction, therefore, some amount of noise is normal.

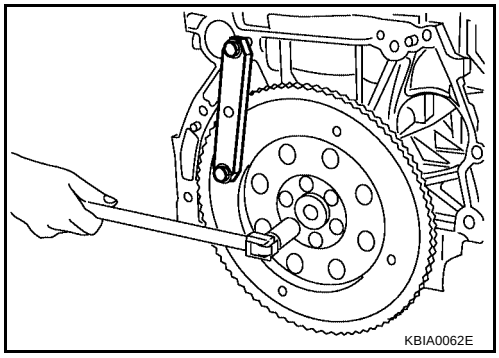

8. Remove pilot converter using Tool (A/T models).

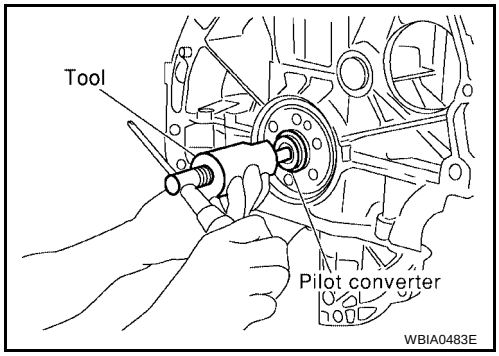

9. Remove the piston and connecting rod assemblies.

a. Position the crankshaft and corresponding connecting rod, to be removed, to the bottom dead center stroke.

b. Remove the connecting rod cap. Number the cap so it can be assembled in the same position.

c. Using a hammer handle or similar tool, push the piston and connecting rod assembly out of the top of the cylinder block. Number the piston and rod so it can be assembled in the same position.

- Before removing the piston and connecting rod assembly, check the connecting rod side clearance. Refer to EM-90, "CONNECTING ROD SIDE CLEARANCE" .

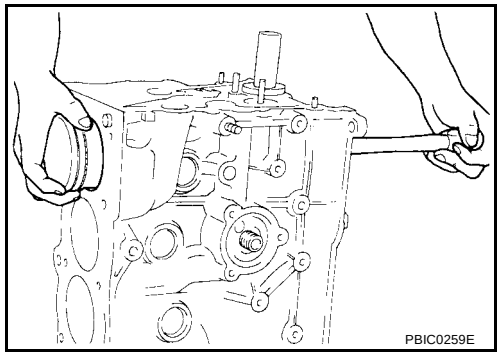

10. Remove the connecting rod bearings. If reusing, number them so they can be assembled in the same position and direction.

CAUTION:

- **When removing them, note the installation position. Keep them in the correct order.**

11. Remove the piston rings from the piston.

- Use a piston ring expander.

CAUTION:

- **When removing the piston rings, be careful not to damage the piston.**
- **Be careful not to damage piston rings by expanding them excessively, if reusing them.**
- Before removing the piston rings, check the piston ring side clearance. Refer to EM-91, "PISTON RING SIDE CLEARANCE" .

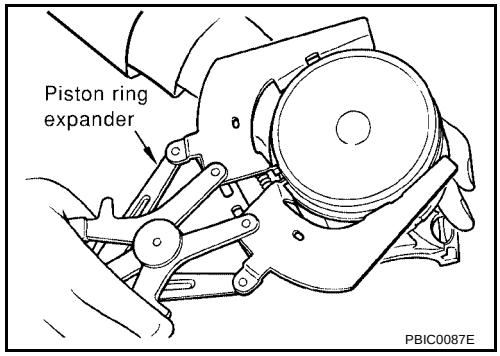

12. Remove the piston from the connecting rod as follows.

a. Using a snap ring pliers, remove the two snap rings.

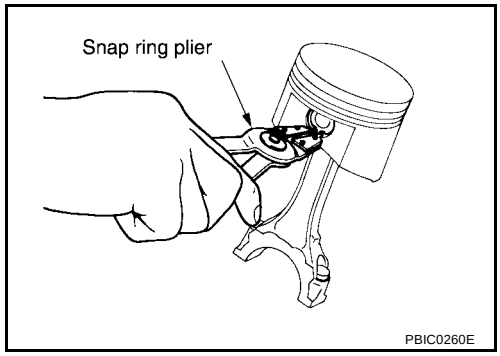

b. Heat the piston to 60° - 70°C (140° - 158°F) with a heat gun, or equivalent.

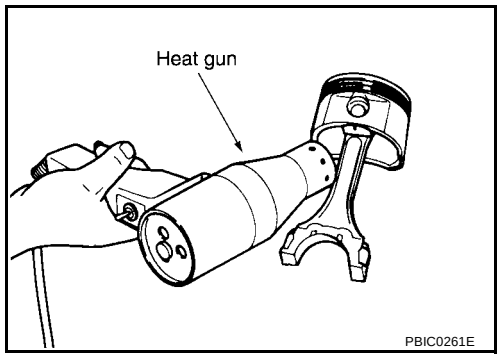

c. Push out piston pin with a punch of an outer diameter of approximately 19 mm (0.75 in).

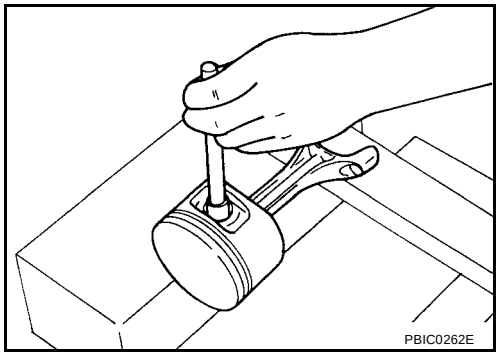

13. Remove the lower cylinder block bolts.
    - Before loosening the lower cylinder block bolts, measure the crankshaft side clearance. Refer to EM-89, "CRANKSHAFT SIDE CLEARANCE" .
    - Loosen them in the order as shown to remove them.

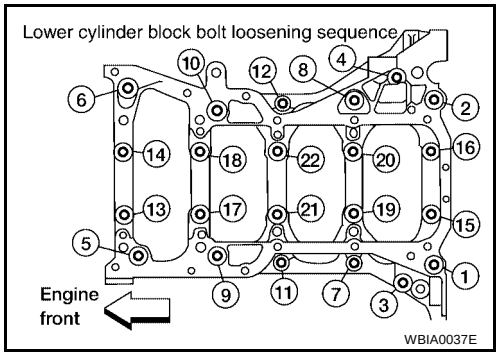

14. Remove the lower cylinder block.
    - Cut the Silicone RTV Sealant and remove the lower cylinder block from the cylinder block, using Tool.

      Seal cutter KV10111100 (J-37228)

      CAUTION:
      Be careful not to damage the mounting surface.

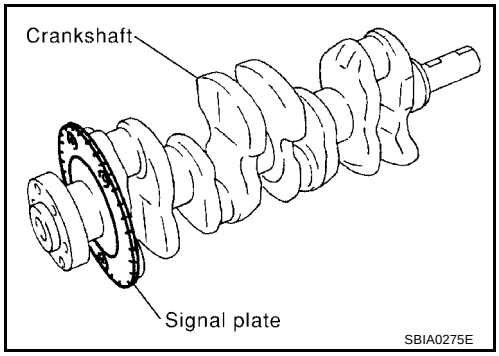

15. Remove the crankshaft.

    CAUTION:
    - **Do not damage or deform the signal plate while mounted on the crankshaft.**
    - **When setting the crankshaft on a flat surface, use a block of wood to avoid interference between the signal plate and the surface.**
    - **Do not remove signal plate unless it is necessary.**
16. Pull the rear oil seal out of the rear end of the crankshaft.

    CAUTION:
    Do not to damage the crankshaft or cylinder block when removing the rear oil seal.

    NOTE:
    When replacing the rear oil seal without removing the cylinder block, use a screwdriver to pull it out from between crankshaft and block.
17. Remove the main bearings and thrust bearings from the cylinder block and lower cylinder block.

    CAUTION:
    Identify and number the bearings, if reusing them, so that they are assembled in the same position and direction.

ASSEMBLY

1. Using compressed air, clean out the coolant and oil passages in the cylinder block, the cylinder bore and the crankcase to remove any foreign material.

CAUTION:
Use approved safety glasses to protect your eyes.

2. Install the drain plugs on the cylinder block.
   - Apply Silicone RTV Sealant.
     Use Genuine Silicone RTV Sealant, or equivalent. Refer to GI-45, "RECOMMENDED CHEMICAL PRODUCTS AND SEALANTS" .
   - Replace the copper washers with new ones.

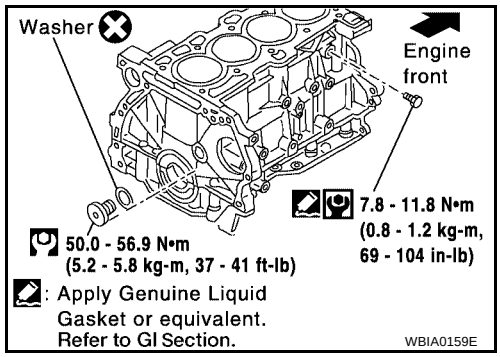

3. Install the main bearings and the thrust bearings.

a. Remove dust, dirt, and oil from the bearing mating surfaces of the cylinder block and lower cylinder block.

b. Install the thrust bearings to both sides of the No. 3 main bearing journal on the cylinder block.
   - Install the thrust bearings with the oil groove facing the crankshaft arm (outside).

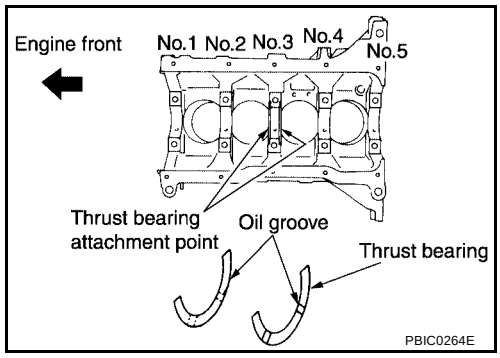

c. Install the main bearings paying attention to their position and direction.
   - The main bearing with an oil hole and groove goes on the cylinder block. The one without them goes on the lower cylinder block.
   - Only the main bearing (on the cylinder block) for No. 3 journal has different specifications.
   - Before installing the bearings, apply engine oil to the bearing friction surface (inside). Do not apply oil to the back surface, but thoroughly clean it.
   - When installing, align the bearing stopper to the notch.
   - Make sure that the oil holes on the cylinder block and those on the corresponding bearing are aligned.

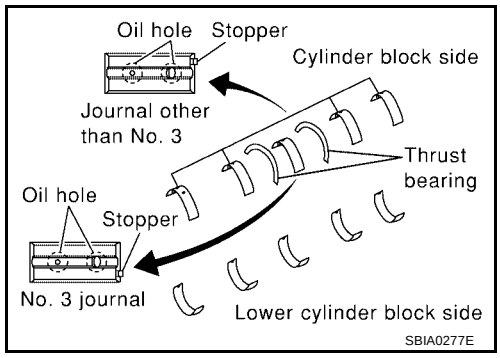

4. Install the signal plate to the crankshaft.

Signal plate bolts	**: 12 - 14 N·m (1.22 - 1.43 kg-m, 9 - 10 ft-lb)**

a. Position the crankshaft and signal plate using a positioning dowel pin, and tighten the bolts to specification.

b. Remove the dowel pin.

CAUTION:
Be sure to remove dowel pin before installing the crankshaft.

NOTE:
Dowel pins for the crankshaft and signal plate are supplied as a set for each.

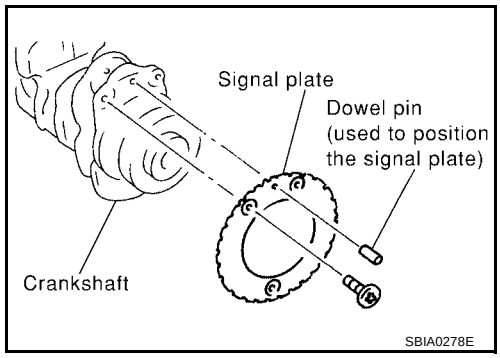

5. Install the crankshaft onto the cylinder block.
   - While turning the crankshaft by hand, check that it turns smoothly.

6. Install the lower cylinder block.
   - Apply Silicone RTV Sealant to positions as shown.
   - Use Genuine Silicone RTV Sealant, or equivalent. Refer to GI-45, "RECOMMENDED CHEMICAL PRODUCTS AND SEALANTS" .

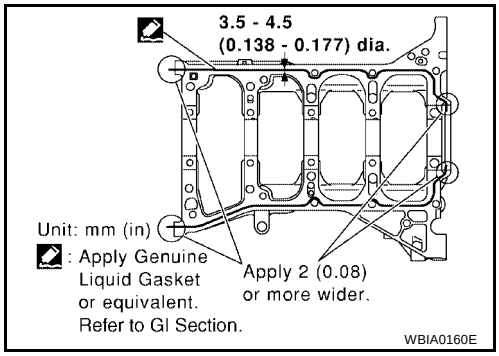

NOTE:
Cylinder block and lower cylinder block are machined together. Neither of them can be replaced separately.

CAUTION:
After the Silicone RTV Sealant is applied, the lower cylinder block installation must be finished within 5 minutes.

7. Tighten lower cylinder block bolts in the numerical order as shown and according to the following steps:

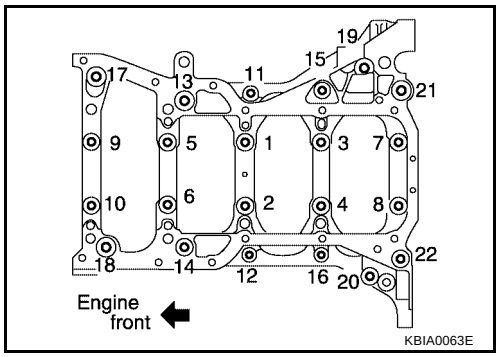

a. Apply new engine oil to threads and seat surfaces of the bolts.
b. Tighten bolts No. 1 - 10 only in the order as shown, to specification below.

First tightening, bolts 1 - 10 only	**: 36.3 - 42.2 N·m (3.7 - 4.3 kg-m, 27 - 31 ft-lb)**

c. Tighten bolts No. 1 - 10 only in the order as shown, to specification below.

CAUTION:
Check tightening angle. Do not make judgment by visual inspection.

Tool number : KV 10112100 (BT-8653-A)

Second tightening, bolts 1 - 10 only	**: 60° - 65° degrees rotation (target: 60° degrees)**

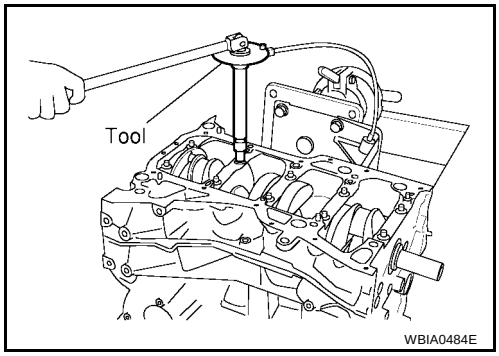

d. Tighten bolts No. 11 - 22 only in the order as shown, to specification below.

Third tightening, bolts 11 - 22 only	**: 19.6 - 24.5 N·m (2.0 - 2.5 kg-m, 15 - 18 ft-lb)**

- Wipe off completely any protruding Silicone RTV Sealant on the exterior of engine.
- Check crankshaft side clearance. Refer to EM-89, "CRANKSHAFT SIDE CLEARANCE" .
- After installing the bolts, make sure that the crankshaft can be rotated smoothly by hand.

8. Install the rear oil seal.
   - Press the oil seal between cylinder block and crankshaft with a suitable drift.
   - Be careful not to touch the grease on the oil seal lip.
   - Be careful not to cause scratches or burrs when pressing in the rear oil seal.

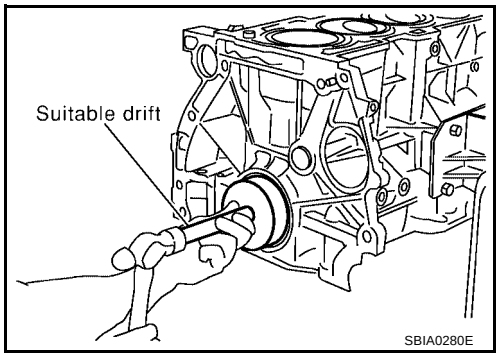

- Press in rear oil seal to the position as shown.

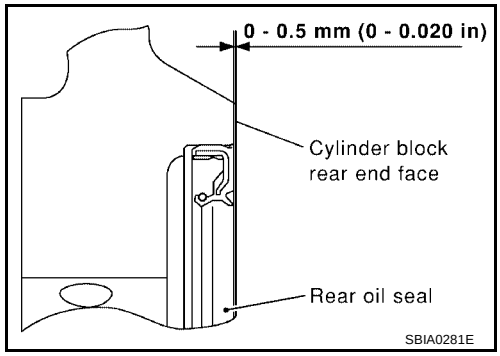

9. Install the piston to the connecting rod. Assemble the components in their original positions.

a. Using a snap ring pliers, install the snap ring to the grooves of the piston's rear side.
   - Insert the piston pin snap ring fully into groove.

b. Install the piston to the connecting rod.
   - Using a heat gun, heat the piston [approximately 60° - 70 C° (140° - 158 °F)] until the piston pin can be pushed in by hand without excessive force. From the front to the rear, insert the piston pin into the piston and the connecting rod.
   - Assemble so that the front mark on the piston crown and the oil holes and the cylinder No. on the connecting rod are positioned as shown.

c. Install the piston pin snap ring into the front of the piston.
   - Check that the connecting rod moves smoothly.

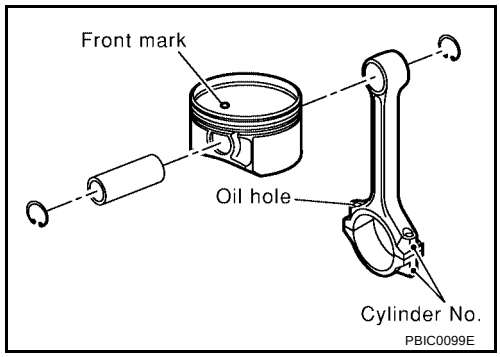

10. Using a piston ring expander, install the piston rings. Assemble the components in their original positions.

CAUTION:
Be careful not to damage the piston.

- Position each ring with the gap as shown, referencing the piston front mark as the starting point.
- Install the top ring and the second ring with the stamped surface facing upward.

Stamped mark **: A (top ring)**
: 2A (second ring)

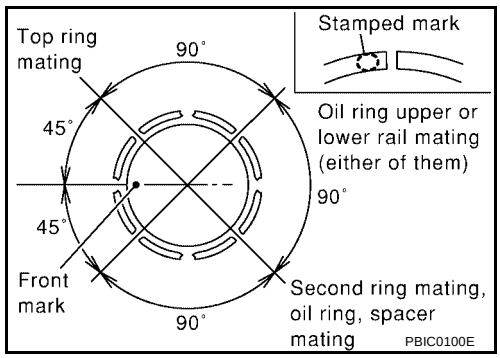

11. Install the connecting rod bearings to the connecting rod and the connecting rod cap. Assemble the components in their original positions.
   - When installing the connecting rod bearings, apply engine oil to the bearing friction surface (inside). Do not apply oil to the back surface, but thoroughly clean the back.
   - When installing, align the connecting rod bearing stopper protrusion with the notch of the connecting rod to install.
   - Check the oil holes on the connecting rod and those on the corresponding bearing are aligned.

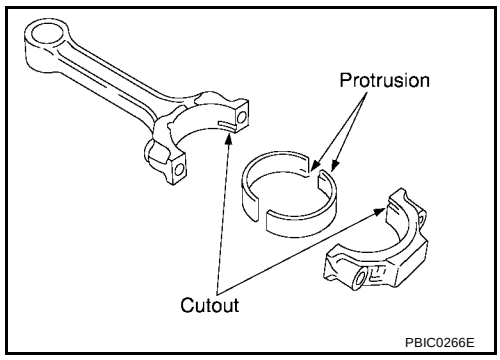

12. Install the piston and connecting rod assembly to the crankshaft. Assemble the components in their original positions.

Tool number : EM03470000

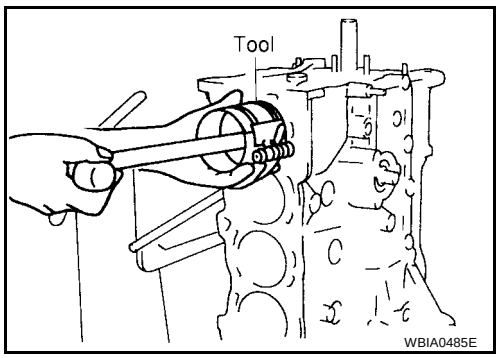

- Rotate the crankshaft so the pin corresponding to the connecting rod to be installed is at the bottom dead center position.
- Apply engine oil sufficiently to the cylinder bore, piston, and crankshaft pin.
- Match the cylinder position number with the cylinder No. on the connecting rod for installation.
- Using a piston ring compressor, install the piston with the front mark on the piston crown facing the front of the engine.

CAUTION:
Be careful not to damage the crankshaft pin, resulting from an interference of the connecting rod big end.

13. Install the connecting rod caps. Assemble the components in their original positions.
    - Match the stamped cylinder number marks on the connecting rod with those on the cap to install.

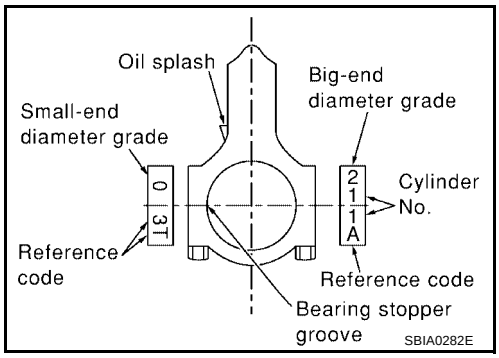

14. Tighten the connecting rod bolt as follows:
    Apply engine oil to the threads and seats of the connecting rod bolts.

CAUTION:
Check tightening angle. Do not make judgment by visual inspection.

Tool number : KV10112100 (BT-8653-A)

Stage 1 : 18.6 - 20.6 N·m (1.9 - 2.1 kg-m, 14 - 15 ft-lb)

Stage 2 : Rotate bolts 85° - 95° degrees (target 90° degrees)

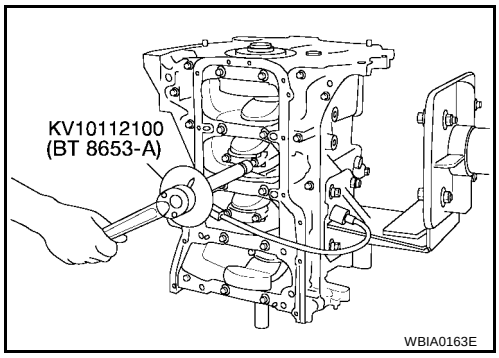

- Check the connecting rod side clearance. Refer to EM-90, "CONNECTING ROD SIDE CLEARANCE" .
- After tightening the bolts, make sure that the crankshaft rotates smoothly.

15. Install flywheel (M/T Models), or drive plate (A/T Models).
    - Install drive plate, reinforcement plate and pilot converter as shown.
    - Using a drift with 33 mm (1.30 in) diameter, push pilot converter into the end of the crankshaft.

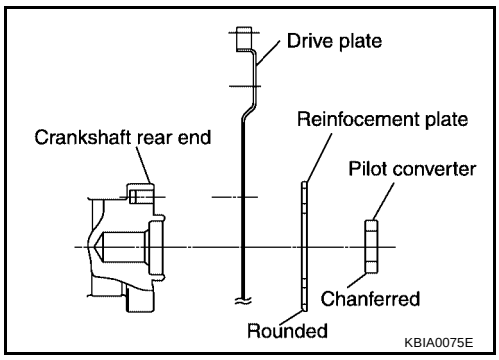

16. Install the knock sensor.
    - Make sure that there is no foreign material on the cylinder block mating surface and the back surface of the knock sensor.
    - Install the knock sensor with the connector facing lower left by 45° as shown.
    - Do not tighten the bolts while holding the connector.
    - Make sure that the knock sensor does not interfere with other parts.

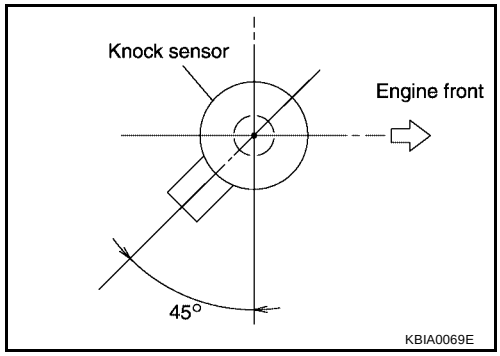

Knock sensor bolt : 15.7 - 26.5 N·m (1.6 - 2.7 kg-m, 12 - 19 ft-lb)

CAUTION:
If the knock sensor is dropped, replace it with new one.

17. Install the crankshaft position sensor (POS).

Crankshaft position sensor bolt : 5.4 - 7.3 N·m (0.55 - 0.75 kg-m, 48 - 65 in-lb)

18. Installation of remaining components is in the reverse order of removal.

How to Select Piston and Bearing

EBS00J5A

DESCRIPTION

Selection points	Selection parts	Selection items	Selection methods
Between cylinder block to crankshaft	Main bearing	Main bearing grade (bearing thickness)	Determined by match of cylinder block bearing housing grade (inner diameter of housing) and crankshaft journal grade (outer diameter of journal)
Between crankshaft to connecting rod	Connecting rod bearing	Connecting rod bearing grade (bearing thickness)	Combining service grades for connecting rod big end inner diameter and crankshaft pin outer diameter determine connecting rod bearing selection
Between cylinder block to piston	Piston and piston pin assembly (The piston is available together with piston pin as an assembly)	Piston grade (piston outer diameter)	Piston grade = cylinder bore grade (inner diameter of bore)
*Between piston to connecting rod	—	—	—

*For the service parts, the grade for fitting cannot be selected between a piston pin and a connecting rod. (Only 0 grade is available.) The information at the shipment from the plant is described as a reference.

- The identification grade stamped on each part is the grade for the dimension measured in new condition. This grade cannot apply to reused parts.
- For reused or repaired parts, measure the dimension accurately. Determine the grade by comparing the measurement with the values of each selection table.
- For details of the measurement method of each part, the reuse standards, and the selection method of the selective fitting parts, refer to the text.

HOW TO SELECT A PISTON

When New Cylinder Block is Used:

- Check the cylinder bore grade on rear left side of cylinder block, and select a piston of the same grade.

- If there is a corrected stamp mark on the cylinder block, use it as a correct reference.

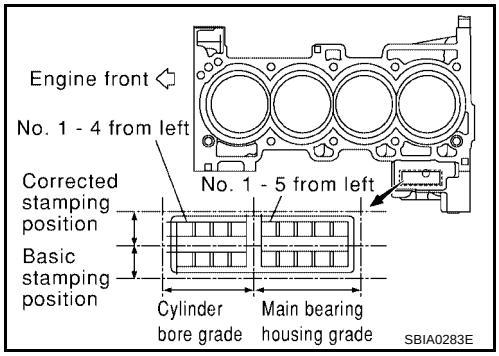

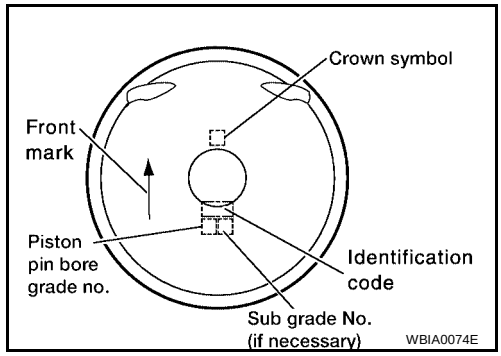

When a Cylinder Block is Reused:

1. Measure the cylinder block bore inner diameter.
2. Determine the bore grade by comparing the measurement with the values under the cylinder bore inner diameter of the "Piston Selection Table". Select the piston of the same grade.

Piston Selection Table

Unit: mm (in)

Grade number (Mark)	2 (or no mark)	3
Inner diameter of cylinder bore	89.010-89.020 (3.5043-3.5047)	89.020-89.030 (3.5047-3.5051)
Outer diameter of piston	88.990-89.000 (3.5035-3.5039)	89.000-89.010 (3.5039-3.5043)

NOTE:

- The piston is available together with piston pin as an assembly.
- The piston pin (piston pin bore) grade is provided only for the parts installed at the plant. For service parts, no grades can be selected. Only 0 grade is available.

HOW TO SELECT A CONNECTING ROD BEARING

When New Connecting Rod and Crankshaft are Used:

1. Apply big end inside diameter grade stamped on connecting rod side face to the row in the "Connecting Rod Bearing Selection Table".

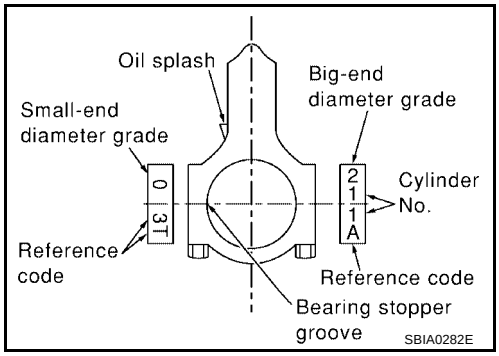

2. Apply pin diameter grade stamped on crankshaft front side to the column in the "Connecting Rod Bearing Selection Table".
3. Read the symbol at the cross point of selected row and column in the "Connecting Rod Bearing Selection Table".
4. Apply the symbol obtained to connecting rod bearing grade table to select.

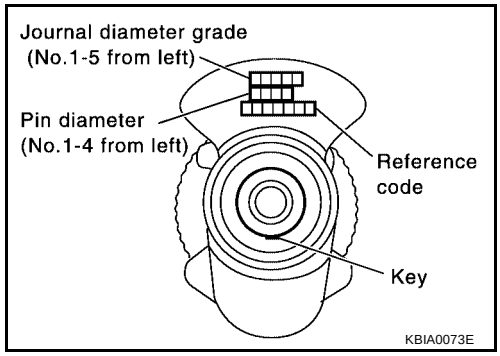

When Crankshaft and Connecting Rod are Reused:

1. Measure dimensions of the big end inner diameter of connecting rod and outer diameter of crankshaft pin individually.
2. Apply the dimension measured to the "Connecting Rod Bearing Selection Table" below.

Connecting Rod Bearing Selection Table

Crankshaft pin outer diameter / Connecting rod big end. inner diameter		Mark	0	1	2	3	4	5	6	7	8	9	A	B	C
		Inner diameter Unit: mm (in)	48.000 – 48.001 (1.8898 – 1.8898)	48.001 – 48.002 (1.8898 – 1.8898)	48.002 – 48.003 (1.8898 – 1.8899)	48.003 – 48.004 (1.8899 – 1.8899)	48.004 – 48.005 (1.8899 – 1.8900)	48.005 – 48.006 (1.8900 – 1.8900)	48.006 – 48.007 (1.8900 – 1.8900)	48.007 – 48.008 (1.8900 – 1.8901)	48.008 – 48.009 (1.8901 – 1.8901)	48.009 – 48.010 (1.8901 – 1.8902)	48.010 – 48.011 (1.8902 – 1.8902)	48.011 – 48.012 (1.8902 – 1.8902)	48.012 – 48.013 (1.8902 – 1.8903)
Mark	Outer diameter Unit: mm (in)														
A	44.974 – 44.973 (1.7706 – 1.7706)		0	0	0	0	0	0	0	0	1	1	1	1	1
B	44.973 – 44.972 (1.7706 – 1.7705)		0	0	0	0	0	0	0	1	1	1	1	1	1
C	44.972 – 44.971 (1.7705 – 1.7705)		0	0	0	0	0	0	1	1	1	1	1	1	1
D	44.971 – 44.970 (1.7705 – 1.7705)		0	0	0	0	0	1	1	1	1	1	1	1	1
E	44.970 – 44.969 (1.7705 – 1.7704)		0	0	0	0	1	1	1	1	1	1	1	1	2
F	44.969 – 44.968 (1.7704 – 1.7704)		0	0	0	1	1	1	1	1	1	1	1	2	2
G	44.968 – 44.967 (1.7704 – 1.7704)		0	0	1	1	1	1	1	1	1	1	2	2	2
H	44.967 – 44.966 (1.7704 – 1.7703)		0	1	1	1	1	1	1	1	1	2	2	2	2
J	44.966 – 44.965 (1.7703 – 1.7703)		1	1	1	1	1	1	1	1	2	2	2	2	2
K	44.965 – 44.964 (1.7703 – 1.7702)		1	1	1	1	1	1	1	2	2	2	2	2	2
L	44.964 – 44.963 (1.7702 – 1.7702)		1	1	1	1	1	1	2	2	2	2	2	2	2
M	44.963 – 44.962 (1.7702 – 1.7702)		1	1	1	1	1	2	2	2	2	2	2	2	2
N	44.962 – 44.961 (1.7702 – 1.7701)		1	1	1	1	2	2	2	2	2	2	2	2	3
P	44.961 – 44.960 (1.7701 – 1.7701)		1	1	1	2	2	2	2	2	2	2	2	3	3
R	44.960 – 44.959 (1.7701 – 1.7700)		1	1	2	2	2	2	2	2	2	2	3	3	3
S	44.959 – 44.958 (1.7700 – 1.7700)		1	2	2	2	2	2	2	2	2	3	3	3	3
T	44.958 – 44.957 (1.7700 – 1.7700)		2	2	2	2	2	2	2	2	3	3	3	3	3
U	44.957 – 44.956 (1.7700 – 1.7699)		2	2	2	2	2	2	2	3	3	3	3	3	3

KBIA0147E

Connecting Rod Bearing Grade Table

Grade	0	1	2	3
Upper / Lower thickness mm (in)	1.499 / 1.495 (0.0590/0.0589)	1.503 / 1.499 (0.0592 / 0.0590)	1.507 / 1.503 (0.0593 / 0.0592)	1.511 / 1.507 (0.0595 / 0.0593)
Identification color	Black	Brown	Green	Yellow

Undersize Bearing Usage Guide

- When the specified oil clearance is not obtained with standard size connecting rod bearing, use undersize (US) bearing.
- When using undersize bearing, measure the bearing inner diameter with bearing installed, and grind the crankshaft pin so that the oil clearance satisfies the standard.

Bearing Undersize Table

Unit: mm (in)

Size U.S.	Thickness
0.25 (0.0098)	1.624 - 1.632 (0.0639 - 0.0643)

CAUTION:
In grinding the crankshaft pin to use undersize bearings, do not damage the fillet R (All crankshaft pins).

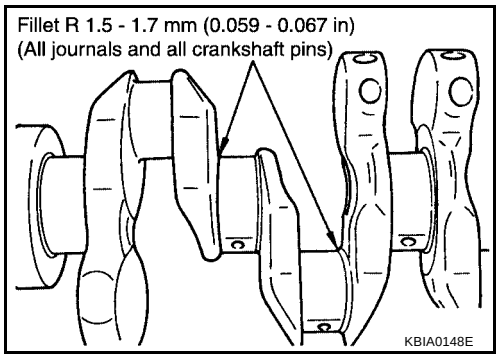

HOW TO SELECT A MAIN BEARING

When New Cylinder Block and Crankshaft are Used:

1. "Main Bearing Selection Table" rows correspond to bearing housing grade on rear left side of cylinder block.
   - If there is a corrected stamp mark on the cylinder block, use it as a correct reference.

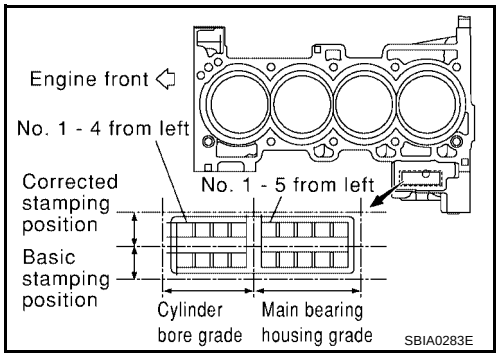

2. Apply journal diameter grade stamped on crankshaft front side to column in "Main Bearing Selection Table".

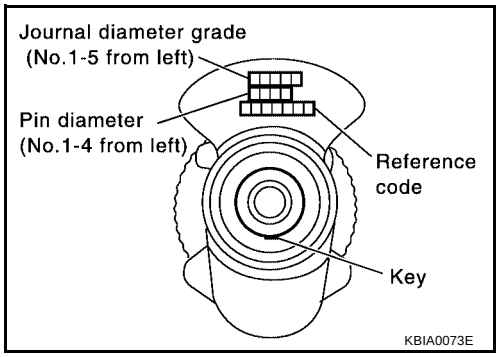

3. Find value at crossing of row and column in "Main Bearing Selection Table".

   CAUTION:
   - **There are two main bearing selection tables. One is for odd-numbered journals (1, 3, and 5) and the other is for even-numbered journals (2 and 4). Make certain to use the appropriate table. This is due to differences in the specified clearances.**

4. Apply the symbol obtained to "Main Bearing Grade Table" to select.

   NOTE:
   - Service parts are available as a set of both upper and lower.

When Cylinder Block and Crankshaft are Reused:

1. Measure inner diameter of cylinder block main bearing housing and outer diameter of crankshaft journal.
2. Apply measurement in above step 1 to the "Main Bearing Selection Table".
3. Follow steps 3 and 4 in "When New Cylinder Block and Crankshaft are Used".

Main Bearing Selection Table (No.1, 3, and No.5 journals)

Cylinder block main bearing hausing inner diameter / Crankshaft journal outer diameter		Mark	A	B	C	D	E	F	G	H	J	K	L	M	N	P	R	S	T	U	V	W	X	Y	4	7
		Inner diameter Unit: mm (in)	58.944 – 58.945 (2.3206 – 2.3207)	58.945 – 58.946 (2.3207 – 2.3207)	58.946 – 58.947 (2.3207 – 2.3207)	58.947 – 58.948 (2.3207 – 2.3208)	58.948 – 58.949 (2.3208 – 2.3208)	58.949 – 58.950 (2.3208 – 2.3209)	58.950 – 58.951 (2.3209 – 2.3209)	58.951 – 58.952 (2.3209 – 2.3209)	58.952 – 58.953 (2.3209 – 2.3210)	58.953 – 58.954 (2.3210 – 2.3210)	58.954 – 58.955 (2.3210 – 2.3211)	58.955 – 58.956 (2.3211 – 2.3211)	58.956 – 58.957 (2.3211 – 2.3211)	58.957 – 58.958 (2.3211 – 2.3212)	58.958 – 58.959 (2.3212 – 2.3212)	58.959 – 58.960 (2.3212 – 2.3213)	58.960 – 58.961 (2.3213 – 2.3213)	58.961 – 58.962 (2.3213 – 2.3213)	58.962 – 58.963 (2.3213 – 2.3214)	58.963 – 58.964 (2.3214 – 2.3214)	58.964 – 58.965 (2.3214 – 2.3215)	58.965 – 58.966 (2.3215 – 2.3215)	58.966 – 58.967 (2.3215 – 2.3215)	58.967 – 58.968 (2.3215 – 2.3216)
Mark	Outer diameter Unit: mm (in)																									
A	54.979 – 54.978 (2.1645 – 2.1645)		0	0	01	01	01	1	1	1	12	12	12	2	2	2	23	23	23	3	3	3	34	34	34	4
B	54.978 – 54.977 (2.1645 – 2.1644)		0	01	01	01	1	1	1	12	12	12	2	2	2	23	23	23	3	3	3	34	34	34	4	4
C	54.977 – 54.976 (2.1644 – 2.1644)		01	01	01	1	1	1	12	12	12	2	2	2	23	23	23	3	3	3	34	34	34	4	4	4
D	54.976 – 54.975 (2.1644 – 2.1644)		01	01	1	1	1	12	12	12	2	2	2	23	23	23	3	3	3	34	34	34	4	4	4	45
E	54.975 – 54.974 (2.1644 – 2.1643)		01	1	1	1	12	12	12	2	2	2	23	23	23	3	3	3	34	34	34	4	4	4	45	45
F	54.974 – 54.973 (2.1643 – 2.1643)		1	1	1	12	12	12	2	2	2	23	23	23	3	3	3	34	34	34	4	4	4	45	45	45
G	54.973 – 54.972 (2.1643 – 2.1642)		1	1	12	12	12	2	2	2	23	23	23	3	3	3	34	34	34	4	4	4	45	45	45	5
H	54.972 – 54.971 (2.1642 – 2.1642)		1	12	12	12	2	2	2	23	23	23	3	3	3	34	34	34	4	4	4	45	45	45	5	5
J	54.971 – 54.970 (2.1642 – 2.1642)		12	12	12	2	2	2	23	23	23	3	3	3	34	34	34	4	4	4	45	45	45	5	5	5
K	54.970 – 54.969 (2.1642 – 2.1641)		12	12	2	2	2	23	23	23	3	3	3	34	34	34	4	4	4	45	45	45	5	5	5	56
L	54.969 – 54.968 (2.1641 – 2.1641)		12	2	2	2	23	23	23	3	3	3	34	34	34	4	4	4	45	45	45	5	5	5	56	56
M	54.968 – 54.967 (2.1641 – 2.1641)		2	2	2	23	23	23	3	3	3	34	34	34	4	4	4	45	45	45	5	5	5	56	56	56
N	54.967 – 54.966 (2.1641 – 2.1640)		2	2	23	23	23	3	3	3	34	34	34	4	4	4	45	45	45	5	5	5	56	56	56	6
P	54.966 – 54.965 (2.1640 – 2.1640)		2	23	23	23	3	3	3	34	34	34	4	4	4	45	45	45	5	5	5	56	56	56	6	6
R	54.965 – 54.964 (2.1640 – 2.1639)		23	23	23	3	3	3	34	34	34	4	4	4	45	45	45	5	5	5	56	56	56	6	6	6
S	54.964 – 54.963 (2.1639 – 2.1639)		23	23	3	3	3	34	34	34	4	4	4	45	45	45	5	5	5	56	56	56	6	6	6	67
T	54.963 – 54.962 (2.1639 – 2.1639)		23	3	3	3	34	34	34	4	4	4	45	45	45	5	5	5	56	56	56	6	6	6	67	67
U	54.962 – 54.961 (2.1639 – 2.1638)		3	3	3	34	34	34	4	4	4	45	45	45	5	5	5	56	56	56	6	6	6	67	67	67
V	54.961 – 54.960 (2.1638 – 2.1638)		3	3	34	34	34	4	4	4	45	45	45	5	5	5	56	56	56	6	6	6	67	67	67	7
W	54.960 – 54.959 (2.1638 – 2.1637)		3	34	34	34	4	4	4	45	45	45	5	5	5	56	56	56	6	6	6	67	67	67	7	7
X	54.959 – 54.958 (2.1637 – 2.1637)		34	34	34	4	4	4	45	45	45	5	5	5	56	56	56	6	6	6	67	67	67	7	7	7
Y	54.958 – 54.957 (2.1637 – 2.1637)		34	34	4	4	4	45	45	45	5	5	5	56	56	56	6	6	6	67	67	67	7	7	7	7
4	54.957 – 54.956 (2.1637 – 2.1636)		34	4	4	4	45	45	45	5	5	5	56	56	56	6	6	6	67	67	67	7	7	7	7	7
7	54.956 – 54.955 (2.1636 – 2.1636)		4	4	4	45	45	45	5	5	5	56	56	56	6	6	6	67	67	67	7	7	7	7	7	7

KBIA0149E

Main Bearing Selection Table (No.2,and 4 journals)

Mark	Outer diameter Unit: mm (in)	A	B	C	D	E	F	G	H	J	K	L	M	N	P	R	S	T	U	V	W	X	Y	4	7
	Inner diameter Unit: mm (in)	58.945 – 58.944 (2.3207 – 2.3206)	58.946 – 58.945 (2.3207 – 2.3207)	58.947 – 58.946 (2.3207 – 2.3207)	58.948 – 58.947 (2.3207 – 2.3208)	58.949 – 58.948 (2.3208 – 2.3208)	58.950 – 58.949 (2.3208 – 2.3209)	58.951 – 58.950 (2.3209 – 2.3209)	58.952 – 58.951 (2.3209 – 2.3209)	58.953 – 58.952 (2.3209 – 2.3210)	58.954 – 58.953 (2.3210 – 2.3210)	58.955 – 58.954 (2.3210 – 2.3211)	58.956 – 58.955 (2.3211 – 2.3211)	58.957 – 58.956 (2.3211 – 2.3211)	58.958 – 58.957 (2.3211 – 2.3212)	58.959 – 58.958 (2.3212 – 2.3212)	58.960 – 58.959 (2.3212 – 2.3213)	58.961 – 58.960 (2.3213 – 2.3213)	58.962 – 58.961 (2.3213 – 2.3213)	58.963 – 58.962 (2.3213 – 2.3214)	58.964 – 58.963 (2.3214 – 2.3214)	58.965 – 58.964 (2.3214 – 2.3215)	58.966 – 58.965 (2.3215 – 2.3215)	58.967 – 58.966 (2.3215 – 2.3215)	58.968 – 58.967 (2.3215 – 2.3216)
A	54.979 – 54.978 (2.1645 – 2.1645)	0	0	0	0	0	0	0	0	01	01	01	1	1	1	12	12	12	2	2	2	23	23	23	3
B	54.978 – 54.977 (2.1645 – 2.1644)	0	0	0	0	0	0	0	01	01	01	1	1	1	12	12	12	2	2	2	23	23	23	3	3
C	54.977 – 54.976 (2.1644 – 2.1644)	0	0	0	0	0	0	01	01	01	1	1	1	12	12	12	2	2	2	23	23	23	3	3	3
D	54.976 – 54.975 (2.1644 – 2.1644)	0	0	0	0	0	01	01	01	1	1	1	12	12	12	2	2	2	23	23	23	3	3	3	34
E	54.975 – 54.974 (2.1644 – 2.1643)	0	0	0	0	01	01	01	1	1	1	12	12	12	2	2	2	23	23	23	3	3	3	34	34
F	54.974 – 54.973 (2.1643 – 2.1643)	0	0	0	01	01	01	1	1	1	12	12	12	2	2	2	23	23	23	3	3	3	34	34	34
G	54.973 – 54.972 (2.1643 – 2.1642)	0	0	01	01	01	1	1	1	12	12	12	2	2	2	23	23	23	3	3	3	34	34	34	4
H	54.972 – 54.971 (2.1642 – 2.1642)	0	01	01	01	1	1	1	12	12	12	2	2	2	23	23	23	3	3	3	34	34	34	4	4
J	54.971 – 54.970 (2.1642 – 2.1642)	01	01	01	1	1	1	12	12	12	2	2	2	23	23	23	3	3	3	34	34	34	4	4	4
K	54.970 – 54.969 (2.1642 – 2.1641)	01	01	1	1	1	12	12	12	2	2	2	23	23	23	3	3	3	34	34	34	4	4	4	45
L	54.969 – 54.968 (2.1641 – 2.1641)	01	1	1	1	12	12	12	2	2	2	23	23	23	3	3	3	34	34	34	4	4	4	45	45
M	54.968 – 54.967 (2.1641 – 2.1641)	1	1	1	12	12	12	2	2	2	23	23	23	3	3	3	34	34	34	4	4	4	45	45	45
N	54.967 – 54.966 (2.1641 – 2.1640)	1	1	12	12	12	2	2	2	23	23	23	3	3	3	34	34	34	4	4	4	45	45	45	5
P	54.966 – 54.965 (2.1640 – 2.1640)	1	12	12	12	2	2	2	23	23	23	3	3	3	34	34	34	4	4	4	45	45	45	5	5
R	54.965 – 54.964 (2.1640 – 2.1639)	12	12	12	2	2	2	23	23	23	3	3	3	34	34	34	4	4	4	45	45	45	5	5	5
S	54.964 – 54.963 (2.1639 – 2.1639)	12	12	2	2	2	23	23	23	3	3	3	34	34	34	4	4	4	45	45	45	5	5	5	56
T	54.963 – 54.962 (2.1639 – 2.1639)	12	2	2	2	23	23	23	3	3	3	34	34	34	4	4	4	45	45	45	5	5	5	56	56
U	54.962 – 54.961 (2.1639 – 2.1638)	2	2	2	23	23	23	3	3	3	34	34	34	4	4	4	45	45	45	5	5	5	56	56	56
V	54.961 – 54.960 (2.1638 – 2.1638)	2	2	23	23	23	3	3	3	34	34	34	4	4	4	45	45	45	5	5	5	56	56	56	6
W	54.960 – 54.959 (2.1638 – 2.1637)	2	23	23	23	3	3	3	34	34	34	4	4	4	45	45	45	5	5	5	56	56	56	6	6
X	54.959 – 54.958 (2.1637 – 2.1637)	23	23	23	3	3	3	34	34	34	4	4	4	45	45	45	5	5	5	56	56	56	6	6	6
Y	54.958 – 54.957 (2.1637 – 2.1637)	23	23	3	3	3	34	34	34	4	4	4	45	45	45	5	5	5	56	56	56	6	6	6	67
4	54.957 – 54.956 (2.1637 – 2.1636)	23	3	3	3	34	34	34	4	4	4	45	45	45	5	5	5	56	56	56	6	6	6	67	67
7	54.956 – 54.955 (2.1636 – 2.1636)	3	3	3	34	34	34	4	4	4	45	45	45	5	5	5	56	56	56	6	6	6	67	67	67

KBIA0150E

Main Bearing Grade Table (All Journals)

Unit: mm (in)

Grade number	Thickness	Identification color (UPR / LWR)	Remarks
0	1.973 - 1.976 (0.0777 - 0.0778)	Black	Grade and color are the same for upper and lower bearings.
1	1.976 - 1.979 (0.0778 - 0.0779)	Brown	
2	1.979 - 1.982 (0.0779- 0.0780)	Green	
3	1.982 - 1.985 (0.0780 - 0.0781)	Yellow	
4	1.985 - 1.988 (0.0781 - 0.0783)	Blue	
5	1.988 - 1.991 (0.0783 - 0.0784)	Pink	
6	1.991 - 1.994 (0.0784 - 0.0785)	Purple	
7	1.994 - 1.997 (0.0785 - 0.0786)	Orange	

01	UPR	1.973 - 1.976 (0.0777 - 0.0778)	Black / Brown	Grade and color are different for upper and lower bearings.
	LWR	1.976 - 1.979 (0.0778 - 0.0779)		
12	UPR	1.976 - 1.979 (0.0778 - 0.0779)	Brown / Green	
	LWR	1.979 - 1.982 (0.0779 - 0.0780)		
23	UPR	1.979 - 1.982 (0.0779 - 0.0780)	Green / Yellow	
	LWR	1.982 - 1.985 (0.0780 - 0.0781)		
34	UPR	1.982 - 1.985 (0.0780 - 0.0781)	Yellow / Blue	
	LWR	1.985 - 1.988 (0.0781 - 0.0783)		
45	UPR	1.985 - 1.988 (0.0781 - 0.0783)	Blue / Pink	
	LWR	1.988 - 1.991 (0.0783 - 0.0784)		
56	UPR	1.988 - 1.991 (0.0783 - 0.0784)	Pink / Purple	
	LWR	1.991 - 1.994 (0.0784 - 0.0785)		
67	UPR	1.991 - 1.994 (0.0784 - 0.0785)	Purple / Orange	
	LWR	1.994 - 1.997 (0.0785 - 0.0786)		

Use Undersize Bearing Usage Guide

- Use undersize (U.S.) bearing when oil clearance with standard size main bearing is not within specification.
- When using undersize (U.S.) bearing, measure the bearing inner diameter with the bearing installed and grind journal until oil clearance falls within specification.

Bearing Undersize Table

Unit: mm (in)

Size U.S.	Thickness
0.25 (0.0098)	2.106 - 2.114 (0.0829 - 0.0832)

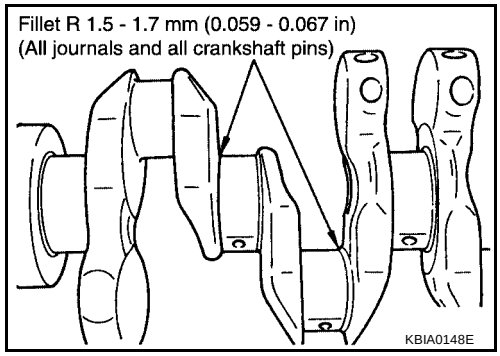

CAUTION:
Do not damage fillet R when grinding crankshaft journal in order to use an undersize bearing (all journals).

Inspection After Disassembly

EBS00J5B

CRANKSHAFT SIDE CLEARANCE

- Using a dial gauge, measure the clearance between the thrust bearings and the crankshaft arm when the crankshaft is moved fully forward or backward.

  Standard : 0.10 - 0.26 mm (0.0039 - 0.0102 in)
  Limit : 0.30 mm (0.0118 in)

- If the measured value exceeds the limit, replace the thrust bearings, and measure again. If it still exceeds the limit, replace the crankshaft.

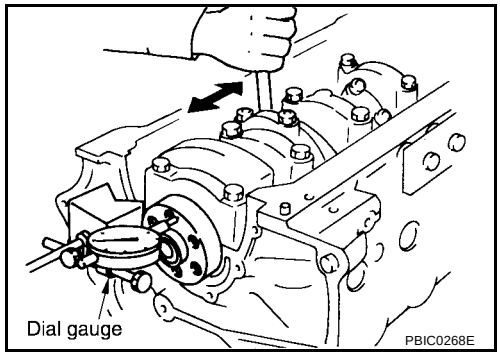

CONNECTING ROD SIDE CLEARANCE

- Measure side clearance between connecting rod and crankshaft arm using a feeler gauge.

  Standard : 0.20 - 0.35 mm (0.0079 - 0.0138 in)

  Limit : 0.50 mm (0.0197 in)

- If the measured value exceeds the limit, replace the connecting rod bearings, and measure again. If it still exceeds the limit, replace the crankshaft also.

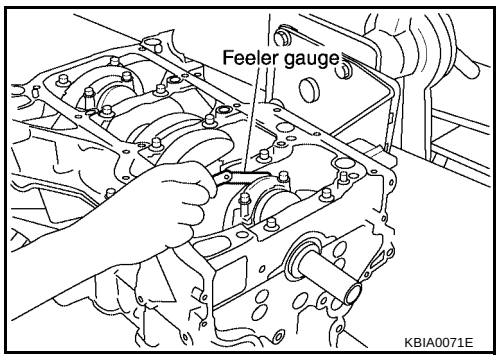

PISTON AND PISTON PIN CLEARANCE

Diameter of Piston Pin Bore

- Measure the diameter of piston pin bore using an inside micrometer. Refer to EM-105, "Available Piston" .

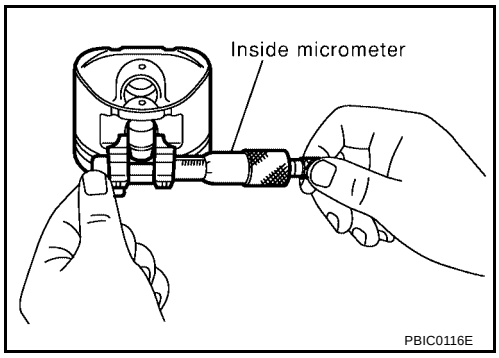

Outer Diameter of Piston Pin

- Measure outer diameter of piston pin using a micrometer. Refer to EM-105, "Piston Pin" .

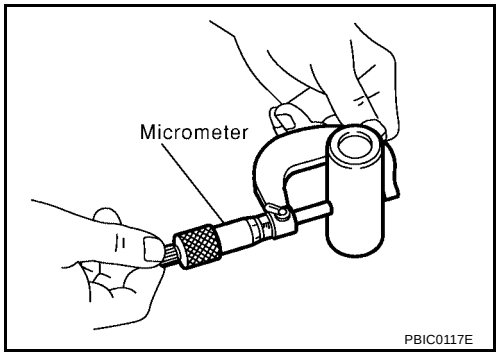

Piston to Piston Pin Clearance

(Piston pin clearance) = (Piston pin bore diameter) – (Outer diameter of piston pin)

Standard : 0.002 - 0.006 mm (0.0001 - 0.0002 in)

- If clearance exceeds specification, replace either or both of piston/piston pin assembly and connecting rod assembly with reference to specification of each parts.
- Refer to piston selection table to replace piston/piston pin assembly. Refer to EM-83, "HOW TO SELECT A PISTON" .
- Refer to connecting rod bearing selection table to replace connecting rod. Refer to EM-84, "HOW TO SELECT A CONNECTING ROD BEARING" .

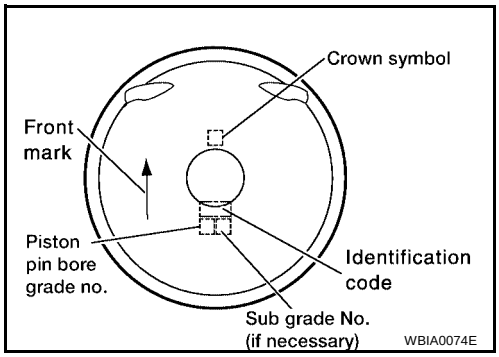

NOTE:

- The connecting rod small end grade and piston pin hole (piston pin) grade are provided only for the parts installed at the plant. For service parts, no grades can be selected. Only 0 grade is available.
- Refer to EM-92, "CONNECTING ROD BUSHING OIL CLEARANCE (SMALL END)" for the values for each grade at the plant.
- Regarding marks on piston head, Refer to EM-83, "HOW TO SELECT A PISTON" .

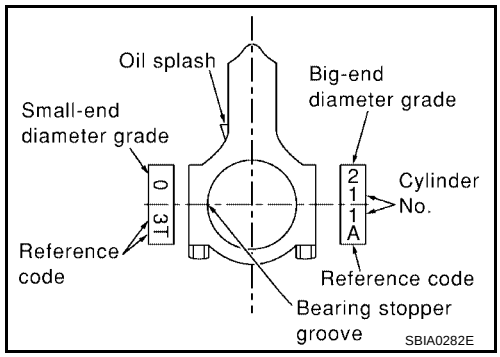

PISTON RING SIDE CLEARANCE

- Measure side clearance of piston ring and piston ring groove using a feeler gauge. Refer to EM-105, "Available Piston" .
- If out of specification, replace piston and/or piston ring assembly.

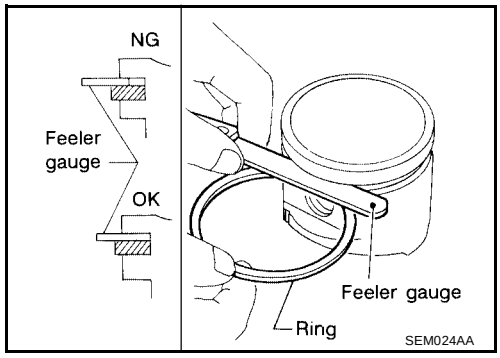

PISTON RING END GAP

- Check if inner diameter of cylinder bore is within specification. Refer to EM-94, "PISTON TO CYLINDER BORE CLEARANCE" .
- Insert piston ring until middle of cylinder with piston, and measure gap using a feeler gauge. Refer to EM-105, "Available Piston" .
- If out of specification, replace piston ring. If gap still exceeds the limit even with a new ring, re-bore cylinder and use oversized piston and piston ring.

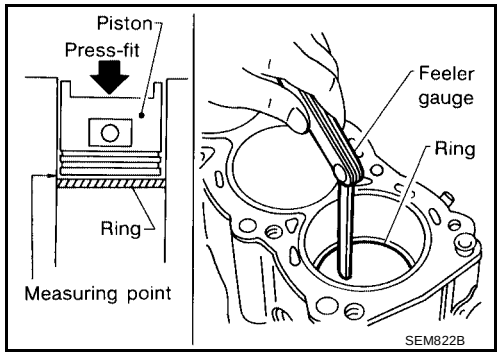

CONNECTING ROD BEND AND TORSION

- Check with connecting rod aligner. Refer to EM-105, "CONNECTING ROD" .

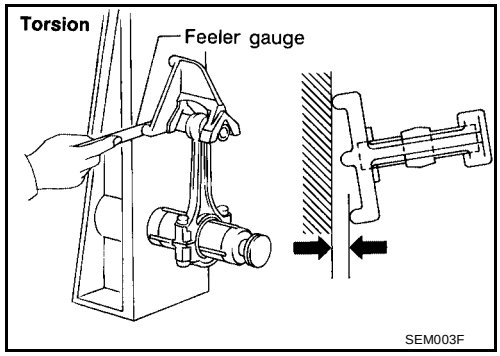

- If it exceeds the limit, replace connecting rod assembly.

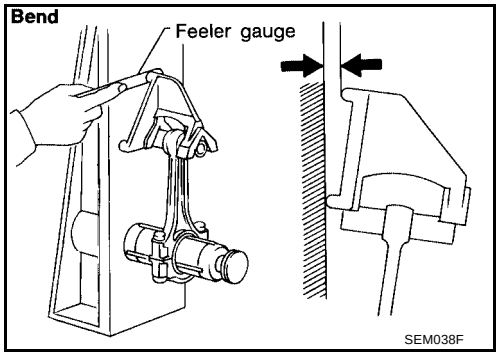

CONNECTING ROD BEARING (BIG END)

- Install the connecting rod cap without the connecting rod bearing installed. After tightening the connecting rod bolt to the specified torque, measure the connecting rod big end inner diameter using an inside micrometer. Refer to EM-105, "CONNECTING ROD" .

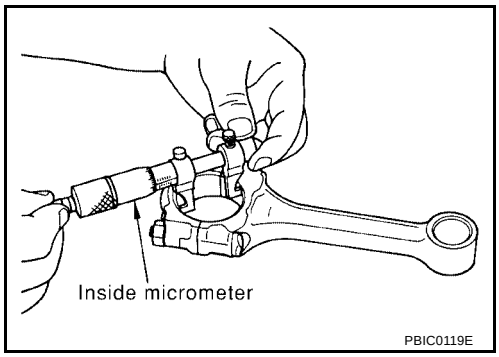

CONNECTING ROD BUSHING OIL CLEARANCE (SMALL END)

Inner Diameter of Connecting Rod (Small End)

- Measure inner diameter of bushing. Refer to EM-105, "CONNECTING ROD"

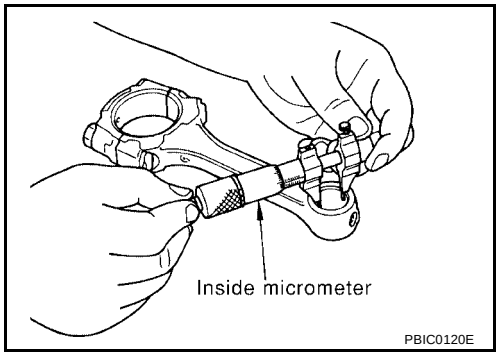

Outer Diameter of Piston Pin

- Measure outer diameter of piston pin. Refer to EM-105, "Piston Pin" .

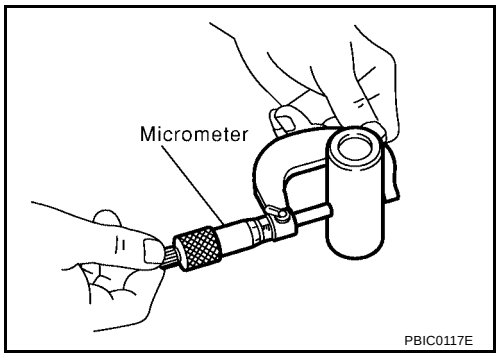

Connecting Rod Bushing Oil Clearance (Small End)

(Connecting rod small end oil clearance) = (Inner diameter of connecting rod small end) – (Outer diameter of piston pin)

Standard : 0.005 - 0.017 mm (0.0002 - 0.0007 in)

- If the measured value exceeds the standard, replace the connecting rod assembly and/or piston and piston pin assembly.
- If replacing the piston and piston pin assembly, refer to the "Piston Selection Table" to select the piston corresponding to the applicable bore grade of the cylinder block to be used. Refer to EM-83, "HOW TO SELECT A PISTON" .

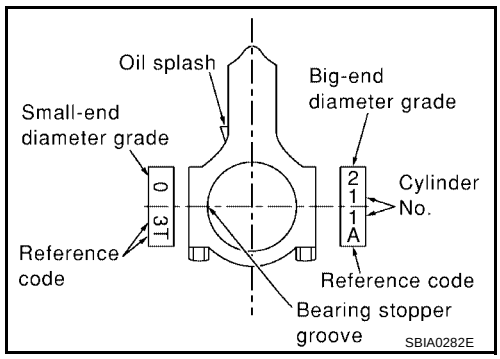

Factory Installed Parts Grading:

- Service parts apply only to grade 0.

Unit: mm (in)

Grade	0	1
Connecting rod small end inner diameter	20.000 - 20.006 (0.7874 - 0.7876)	20.006 - 20.012 (0.7876 - 0.7879)
Piston pin outer diameter	19.989 - 19.995 (0.7870 - 0.7872)	19.995 - 20. 001 (0.7872 - 0.7874)
Piston pin bore diameter	19.993 - 19.999 (0.7871- 0.7874)	19.999 - 20.005 (0.7874 - 0.7876)

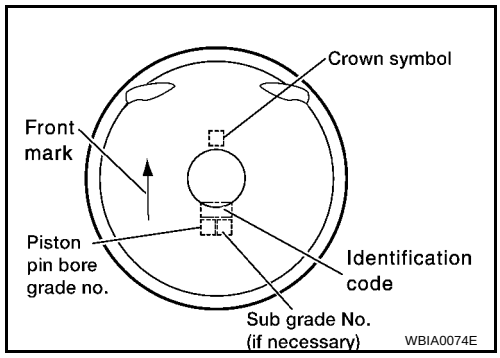

CYLINDER BLOCK DISTORTION

- Using a scraper, remove gasket on the cylinder block surface, and also remove oil, scale, carbon, or other contamination.

  CAUTION:
  Be careful not to allow gasket debris to enter the oil or coolant passages.
- Measure the distortion on the block upper face at some different points in 6 directions.

  Limit : 0.1 mm (0.004 in)
- If out of the distortion limit, replace the cylinder block.

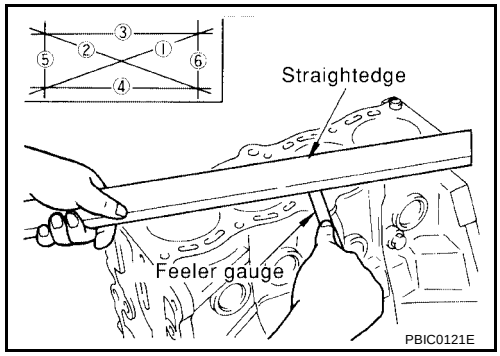

INNER DIAMETER OF MAIN BEARING HOUSING

- Install the main bearing caps with the main bearings removed and tighten the bolts to the specified torque. Refer to EM-78, "ASSEMBLY" .
- Using a bore gauge, measure the inner diameter of the main bearing housing.

  Standard : 58.944 - 58.967 mm (2.3206 - 2.3215 in)
- If out of the standard, replace the cylinder block and lower cylinder block assembly.

  NOTE:
  These components cannot be replaced as a single unit because they were processed together.

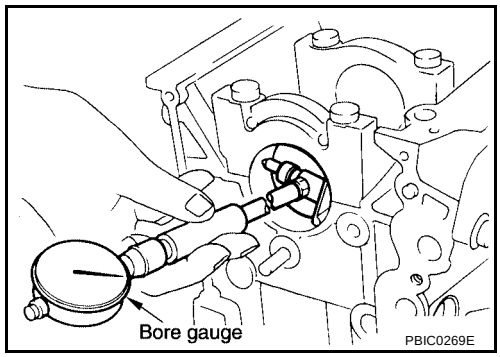

PISTON TO CYLINDER BORE CLEARANCE

Inner Diameter of Cylinder Bore

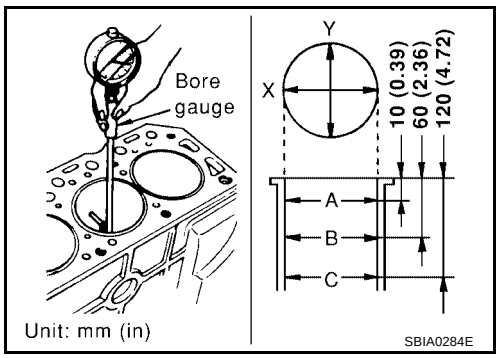

- Using a bore gauge, measure cylinder bore for wear, out-of-round and taper at 6 different points on each cylinder. (X and Y directions at A, B and C). The Y axis is in the longitudinal direction of the engine.

  NOTE:
  When determining cylinder bore grade, measure cylinder bore at B position. Refer to EM-104, "CYLINDER BLOCK" .
- If the measured value rebore exceeds the limit, or if there are scratches and/or seizure on the cylinder inner wall, hone the inner wall.
- An oversize piston is provided. When using an oversize piston, rebore the cylinder so that the clearance of the piston cylinder satisfies the standard.

  Over size (OS) : 0.2 mm (0.008 in)

Outer Diameter of Piston

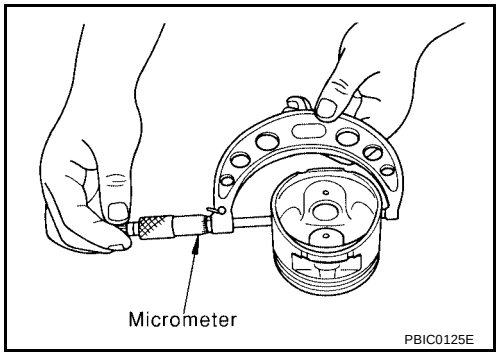

- Measure piston skirt diameter using a micrometer. Refer to EM-105, "Available Piston" .
- Measure point (distance from the top): 42 mm (1.65 in)

Piston to Cylinder Bore Clearance

- Calculate by outer diameter of piston skirt and inner diameter of cylinder (direction X, position B).

(Clearance) = (Inner diameter of cylinder) – (Outer diameter of piston skirt).

Standard : 0.010 - 0.030 mm (0.0004 - 0.0012 in)
Limit : 0.08 mm (0.0031 in)

- If it exceeds the limit, replace piston/piston pin assembly.

Reboring Cylinder Bore

1. Cylinder bore size is determined by adding piston-to-bore clearance to piston diameter “A”.

   Rebored size calculation: D = A + B - C

   D: Bored diameter
   A: Piston diameter as measured
   B: Piston-to-bore clearance (standard value)
   C: Honing allowance 0.02 mm (0.0008 in)
2. Install main bearing caps, and tighten to the specified torque. Otherwise, cylinder bores may be distorted in final assembly.
3. Cut cylinder bores.

- **When any cylinder needs boring, all other cylinders must also be bored.**
- **Do not cut too much out of cylinder bore at a time. Cut only 0.05 mm (0.0020 in) or so in diameter at a time.**

4. Hone cylinders to obtain specified piston-to-bore clearance.
5. Measure finished cylinder bore for out-of-round and taper.

- **Measurement should be done after cylinder bore cools down.**

OUTER DIAMETER OF CRANKSHAFT JOURNAL

- Measure outer diameter of crankshaft journals.

Standard : 54.955 - 54.979 mm (2.1636 - 2.1645 in)

OUTER DIAMETER OF CRANKSHAFT PIN

- Measure outer diameter of crankshaft pin.

Standard : 44.956 - 44.974 mm (1.7699 - 1.7706 in)

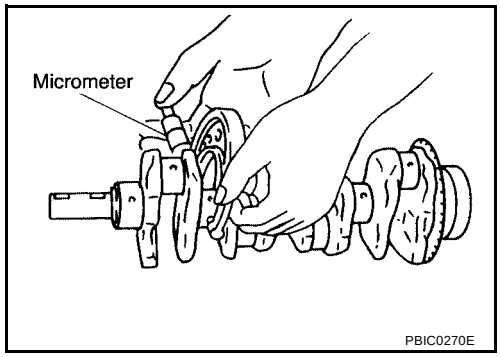

OUT-OF-ROUND AND TAPER OF CRANKSHAFT

- Measure the dimensions at four different points as shown on each journal and pin using a micrometer.
- Out-of-round is indicated by the difference in dimensions between "X" and "Y" at "A" and "B".
- Taper is indicated by the difference in dimension between "A" and "B" at "X" and "Y".

Limit

Out-of-round (X - Y) : 0.005 mm (0.0002 in)

Taper (A - B) : 0.005 mm (0.0002 in)

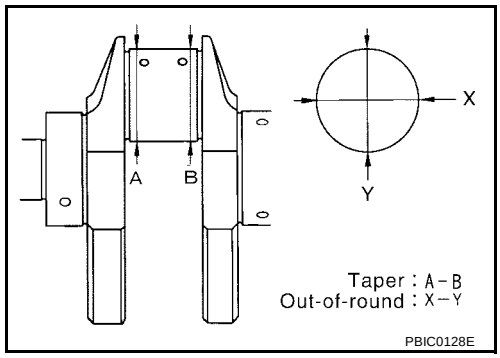

CRANKSHAFT RUNOUT

- Place a V-block on a precise flat table to support the journals on both ends of the crankshaft.
- Place a dial gauge straight up on the No. 3 journal.
- While rotating the crankshaft, read the movement of the pointer on the dial gauge, the total indicator reading.

Limit : Less than 0.05 mm (0.002 in)

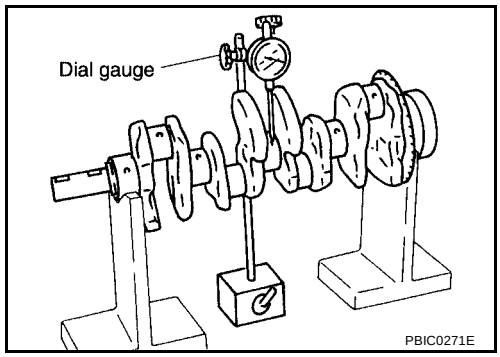

OIL CLEARANCE OF CONNECTING ROD BEARING

Method of Measurement

- Install the connecting rod bearings to the connecting rod and the cap, and tighten the connecting rod bolts to the specified torque. Using a inside micrometer measure the inner diameter of connecting rod bearing.
  (Oil clearance) = (Inner diameter of connecting rod bearing) – (Outer diameter of crankshaft pin)

  Standard : 0.028 - 0.045 mm (0.0011 - 0.0018 in)
  Limit : 0.10 mm (0.0039 in)

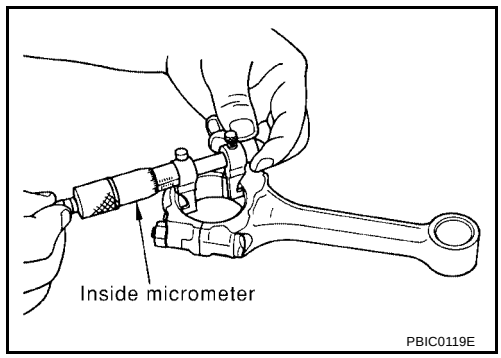

- If clearance cannot be adjusted within the standard, grind crankshaft pin and use undersized bearing. Refer to EM-84, "HOW TO SELECT A CONNECTING ROD BEARING" .

Method of Using Plastigage

- Remove oil and dust on the crankshaft pin and the surfaces of each bearing completely.
- Cut the Plastigage slightly shorter than the bearing width, and place it in crankshaft axial direction, avoiding oil holes.
- Install the connecting rod bearings to the connecting rod cap, and tighten the connecting rod bolts to the specified torque.

  CAUTION:
  Never rotate the crankshaft.
- Remove the connecting rod cap and bearings, and using the scale on the Plastigage bag, measure the Plastigage width.

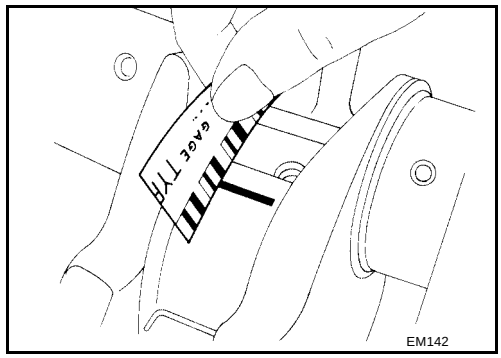

  NOTE:
  The procedure when the measured value exceeds the limit is same as that described in the method by calculation.

OIL CLEARANCE OF MAIN BEARING

Method of Measurement

- Install the main bearings to the cylinder block and bearing cap. Measure the main bearing inner diameter with the bearing cap bolt tightened to the specified torque.
  (Oil clearance) = (Inner diameter of main bearing) – (Outer diameter of crankshaft journal)

  Standard:
  No. 1, 3, and 5 journals : 0.012 - 0.022 mm (0.0005 - 0.0009 in)
  No. 2 and 4 journals : 0.018 - 0.028 mm (0.0007 - 0.0011 in)
  Limit : 0.1 mm (0.004 in)

- If the measured value exceeds the limit, select main bearings referring to the main bearing inner diameter and crankshaft journal outer diameter, so that the oil clearance satisfies the standard. Refer to EM-86, "HOW TO SELECT A MAIN BEARING" .

Method of Using Plastigage

- Remove oil and dust on the crankshaft journal and the surfaces of each bearing completely.
- Cut the Plastigage slightly shorter than the bearing width, and place it in crankshaft axial direction, avoiding oil holes.
- Tighten the main bearing bolts to the specified torque.

  CAUTION:
  Never rotate the crankshaft.
- Remove the bearing cap and bearings, and using the scale on the plastigage bag, measure the plastigage width.

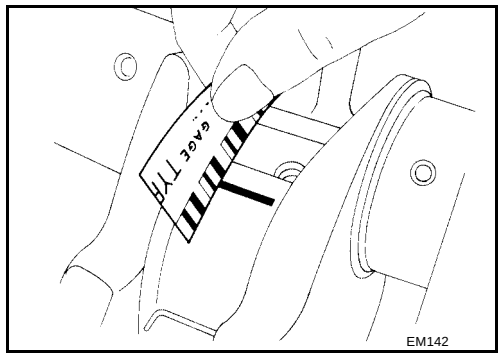

NOTE:
The procedure when the measured value exceeds the limit is same as that described in the "Method by Calculation".

CRUSH HEIGHT OF MAIN BEARING

- When the bearing cap is removed after being tightened to the specified torque with main bearings installed, the tip end of bearing must protrude.

  Standard : There must be crush height.

- If the standard is not met, replace main bearings.

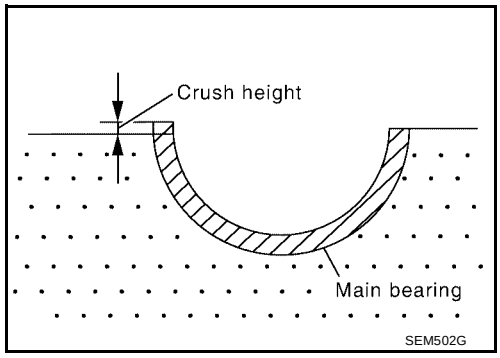

OUTER DIAMETER OF LOWER CYLINDER BLOCK BOLT

- Perform only with M10 (0.39 in) bolts.
- Measure outer diameters (d1, d2) at two positions as shown.
- Measure d2 at a point within area A as shown.
- When the value of d1- d2 exceeds the limit (a large difference in dimensions), replace the bolt with a new one.

  Limit : 0.13 mm (0.0051 in)

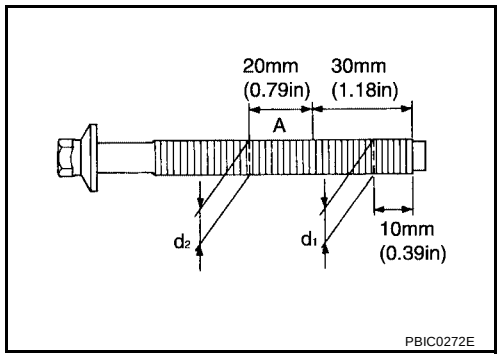

OUTER DIAMETER OF CONNECTING ROD BOLT

- Measure outer diameter (d) at position as shown.
- When “d” exceeds the limit (when it becomes thinner), replace the bolt with a new one.

  Limit : 7.75 mm (0.3051 in) or less

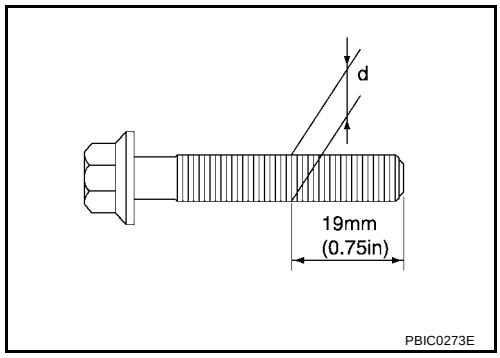

MOVEMENT AMOUNT OF FLYWHEEL (M/T MODEL)

NOTE:
- Inspection for double mass flywheel only.
- Do not disassemble double mass flywheel.

Flywheel Deflection

- Measure deflection of flywheel contact surface to the clutch with a dial gauge.

- Measure runout at 210 mm (8.27 in) dia.

  Limit : 0.45 mm (0.0177 in) or less under no load

- Measure axial displacement at 250 mm (9.84 in) dia.

  Limit : 1.3 mm (0.051 in) or less under 100N (22.48 lb) force

- When measured value exceeds the limit, replace the flywheel with a new one.

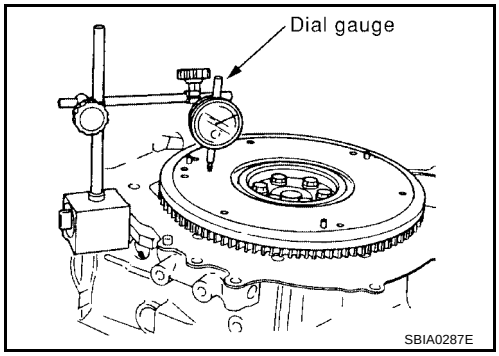

Movement Amount in Rotation Direction

- Check the movement amount in the following procedure.

1. Install a bolt to clutch cover mounting hole, and place a torque wrench on the extended line of the flywheel center line.

- Tighten bolt to keep it from loosening at a force of 9.8 N·m (1 kg-m, 87 in-lb).

2. Put a mating mark on circumferences of the two flywheel masses without applying any load (measurement standard points).
3. Apply a force of 9.8 N·m (1 kg-m, 87 in-lb) in each direction, and mark the movement amount on the mass on the transmission side.
4. Measure dimensions of movement amounts A and B on circumference of the flywheel on the transmission side.

   Standard : 35 mm (1.38 in) or less

- When measured value is outside the standard, replace flywheel.

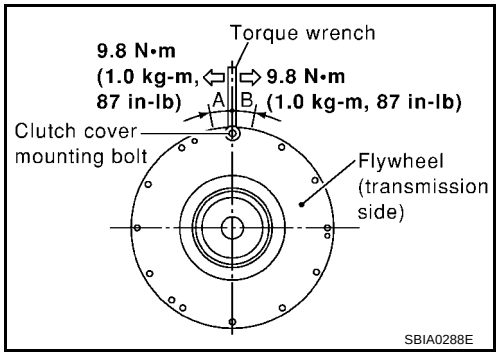

SERVICE DATA AND SPECIFICATIONS (SDS)

PFP:00030

Standard and Limit

EBS00J5C

GENERAL SPECIFICATIONS

Cylinder arrangement		In-line 4
Displacement cm^3 (in^3)		2,488 (151.82)
Bore and stroke mm (in)		89.0 x 100 (3.50 x 3.94)
Valve arrangement		DOHC
Firing order		1-3-4-2
Number of piston rings	Compression	2
	Oil	1
Compression ratio		9.5:1
Compression pressure kPa (kg/cm^2, psi) / 250 rpm	Standard	1,250 (12.8, 181.3)
	Minimum	1,060 (10.8, 153.7)
	Differential limit between cylinders	100 (1.0, 14)
Valve timing	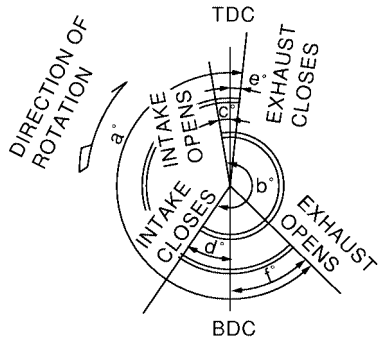 PBIC0187E	

Unit: degree

a	b	c	d	e	f
224°	244°	0°	64°	3°	41°

DRIVE BELTS

Tension of drive belts	Auto adjustment by auto tensioner

INTAKE MANIFOLD AND EXHAUST MANIFOLD

Unit: mm (in)

	Description	Limit
Surface distortion	Intake manifold collector	0.1 (0.004)
	Intake manifold	0.1 (0.004)
	Exhaust manifold	0.3 (0.012)

SPARK PLUG

Unit: mm (in)

Make		NGK
Type	Standard	PLFR5A-11
	Hot	PLFR4A-11
	Cold	PLFR6A-11
Gap (nominal)		1.1 (0.043)

CYLINDER HEAD

Unit: mm (in)

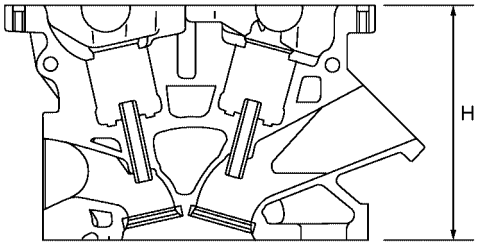

Nominal cylinder head height:
H = 129.4 mm (5.09 in)

PBIC0283E

Description	Limit
Head surface distortion	0.1 (0.004)

VALVE

Valve Dimensions

Unit: mm (in)

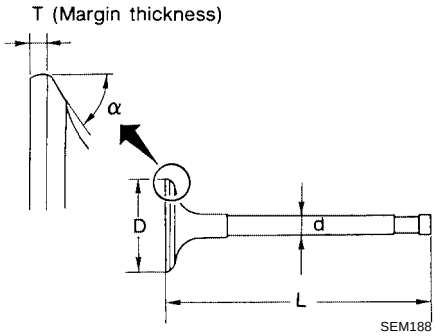

SEM188

Valve head diameter “D”	Intake	35.5 - 35.8 (1.398 - 1.409)
	Exhaust	30.5 - 30.8 (1.201 - 1.213)
Valve length “L”	Intake	97.16 (3.8252)
	Exhaust	98.82 (3.8905)
Valve stem diameter “d”	Intake	5.965 - 5.980 (0.2348 - 0.2354)
	Exhaust	5.955 - 5.970 (0.2344 - 0.2350)
Valve seat angle “α”	Intake	45°15′ - 45°45′
	Exhaust	
Valve margin “T”	Intake	1.1 (0.043)
	Exhaust	1.3 (0.051)

Valve Clearance

Unit: mm (in)

	Cold* (reference data)	Hot
Intake	0.24 - 0.32 (0.009 - 0.013)	0.32 - 0.40 (0.013 - 0.016)
Exhaust	0.26 - 0.34 (0.010 - 0.013)	0.33 - 0.41 (0.013 - 0.016)

*: Approximately 20°C (68 °F)

Available Valve Lifter

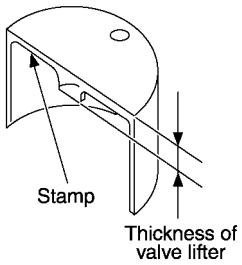

KBIA0119E

Thickness mm (in)	Identification mark (Stamp)
6.96 (0.2740)	696
6.98 (0.2748)	698
7.00 (0.2756)	700
7.02 (0.2764)	702
7.04 (0.2772)	704
7.06 (0.2780)	706
7.08 (0.2787)	708
7.10 (02795)	710
7.12 (0.2803)	712
7.14 (0.2811)	714
7.16 (0.2819)	716
7.18 (0.2827)	718
7.20 (0.2835)	720
7.22 (0.2843)	722
7.24(0.2850)	724
7.26 (0.2858)	726
7.28 (0.2866)	728
7.30(0.2874)	730
7.32 (0.2882)	732
7.34 (0.2890)	734
7.36 (0.2898)	736
7.38 (0.2906)	738
7.40 (0.2913)	740
7.42 (0.2921)	742
744 (0.2929)	744
7.46 (0.2937)	746

Valve Spring

Free height standard mm (in)	Intake	44.84 - 45.34 (1.7654 - 1.7850)
	Exhaust	45.28 - 45.78 (1.7827 - 1.8024)
Pressure standard N (kg, lb) at height mm (in)	Intake and Exhaust	151 - 175 (15.4 - 17.8, 34 - 39) at 35.30 (1.390)
Out-of-square mm (in)		1.9 (0.0748)
Installation height mm (in)	Intake	35.30 (1.390)
	Exhaust	35.30 (1.390)

Installation load N (kg - force, lb - force)	Intake	151 (15.4 - 17.8, 34 - 39)
	Exhaust	151 (15.4 - 17.8, 34 - 39)
Height during valve open mm (in)	Intake	24.94 (0.9819)
	Exhaust	26.39 (1.0390)
Load with valve open N (kg - force, lb - force)	Intake	358 - 408 (36.5 - 41.6, 80 - 92)
	Exhaust	325 - 371 (33.1 - 37.8, 73 - 83)

Valve Lifter

Unit: mm (in)

Description	Standard
Valve lifter outer diameter	33.965 - 33.980 (1.3372 - 1.3378)
Lifter lifter bore inner diameter	34.000 - 34.021 (1.3386 - 1.3394)
Clearance between lifter and lifter guide	0.020 - 0.056 (0.0008 - 0.0022)

Valve Guide

Unit: mm (in)

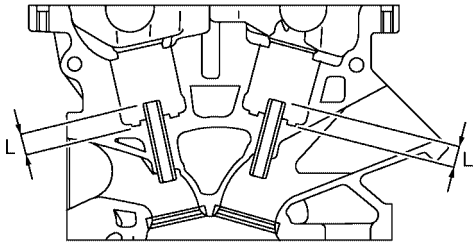

PBIC0184E

Description		Standard	Service
Valve guide	Outer diameter	10.023 - 10.034 (0.3946 - 0.3950)	10.223 - 10.234 (0.4025 - 0.4029)
	Inner diameter (Finished size)	6.000 - 6.018 (0.2362 - 0.2369)	
Cylinder head valve guide hole diameter		9.975 - 9.996 (0.3927 - 0.3935)	10.175 - 10.196 (0.4006 - 0.4014)
Interference fit of valve guide		0.027 - 0.059 (0.0011 - 0.0023)	
		Standard	
Valve guide clearance	Intake	0.020 - 0.053 (0.0008 - 0.0021) or less	
	Exhaust	0.030 - 0.063 (0.0012 - 0.0025) or less	
Projection length “L”	Intake	10.1 - 10.3 (0.398 - 0.406)	
	Exhaust	10.0 - 10.4 (0.394 - 0.409)	

Valve Seat

Unit: mm (in)

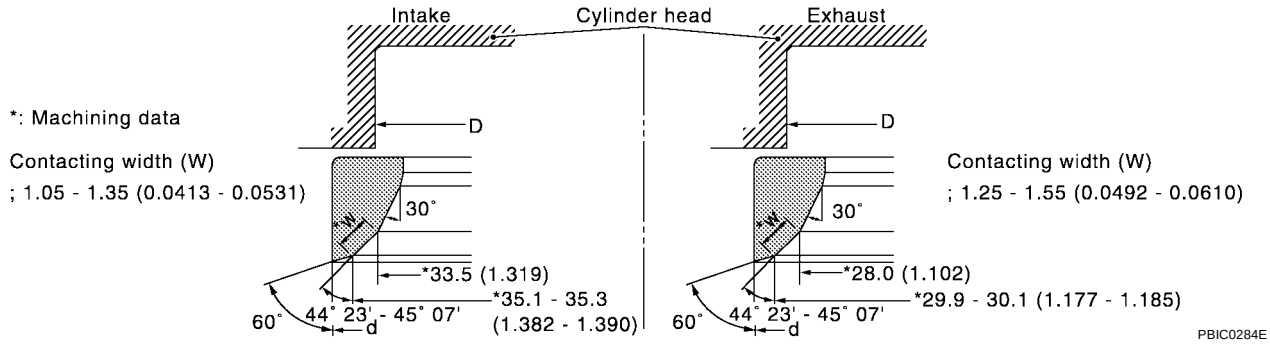

Description		Standard	Service
Cylinder head seat recess diameter (D)	Intake	36.500 - 36.516 (1.4370 - 1.4376)	37.000 - 37.016 (1.4567 - 1.4573)
	Exhaust	31.500 - 31.516 (1.2402 - 1.2408)	32.000 - 32.016 (1.2598 - 1.2605)
Valve seat interference fit	Intake	0.081 - 0.113 (0.0032 - 0.0044)	
	Exhaust	0.084 - 0.116 (0.0033 - 0.0046)	
Valve seat outer diameter (d)	Intake	36.597 - 36.613 (1.4408 - 1.4415)	37.097 - 37.113 (1.4605 - 1.4611)
	Exhaust	31.600 - 31.616 (1.2441 - 1.2447)	32.100 - 32.116 (1.2638 - 1.2644)

CAMSHAFT AND CAMSHAFT BEARING

Unit: mm (in)

	Standard
Camshaft runout [TIR*]	Less than 0.04 (0.0016)

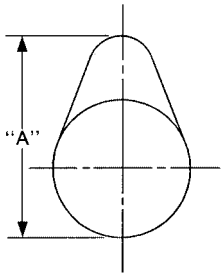

Cam height "A"	Intake	45.665 - 45.855 (1.7978 - 1.8053)
	Exhaust	43.975 - 44.165 (1.7313 - 1.7388)
Outer diameter of camshaft journal		No. 1 27.935 - 27.955 (1.0998 - 1.1006) No. 2, 3, 4, 5 23.435 - 23.455 (0.9226 - 0.9234)
Inner diameter of camshaft bracket		No.1 28.000 - 28.021 (1.1024 - 1.1032) No.2, 3, 4, 5 23.500 - 23.521 (0.9252 - 0.9260)
Camshaft journal clearance		0.045 - 0.086 (0.0018 - 0.0034)
Camshaft end play		0.115 - 0.188 (0.0045 - 0.0074)
Camshaft sprocket runout [TIR*]		Less than 0.15 (0.0059)

*: Total indicator reading

CYLINDER BLOCK

Unit: mm (in)

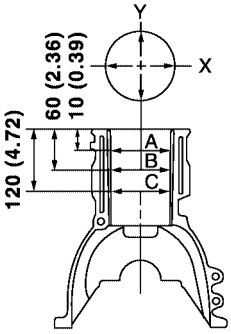

PBIC0281E

Surface distortion	Limit			0.1 (0.004)
Cylinder bore	Inner diameter	Standard	Grade No. 2	89.010 - 89.020 (3.5043 - 3.5047)
			Grade No. 3	89.020 - 89.030 (3.5047 - 3.5051)
		Wear limit		0.2 (0.008)
Out-of-round (X – Y)				Less than 0.015 (0.0006)
Taper (C – A)				Less than 0.01 (0.0004)
Main journal inner diameter grade (Without bearing)	Grade No. A			58.944 - 58.945 (2.3206 - 2.3207)
	Grade No. B			58.945 - 58.946 (2.3207 - 2.3207)
	Grade No. C			58.946 - 58.947 (2.3207 - 2.3207)
	Grade No. D			58.947 - 58.948 (2.3207 - 2.3208)
	Grade No. E			58.948 - 58.949 (2.3208 - 2.3208)
	Grade No. F			58.949 - 58.950 (2.3208 - 2.3209)
	Grade No. G			58.950 - 58.951 (2.3209 - 2.3209)
	Grade No. H			58.951 - 58.952 (2.3209 - 2.3209)
	Grade No. J			58.952 - 58.953 (2.3209 - 2.3210)
	Grade No. K			58.953 - 58.954 (2.3210 - 2.3210)
	Grade No. L			58.954 - 58.955 (2.3210 - 2.3211)
	Grade No. M			58.955 - 58.956 (2.3211 - 2.3211)
	Grade No. N			58.956 - 58.957 (2.3211 - 2.3211)
	Grade No. P			58.957 - 58.958 (2.3211 - 2.3212)
	Grade No. R			58.958 - 58.959 (2.3212 - 2.3212)
	Grade No. S			58.959 - 58.960 (2.3212 - 2.3213)
	Grade No. T			58.960 - 58.961 (2.3213 - 2.3213)
	Grade No. U			58.961 - 58.962 (2.3213 - 2.3213)
	Grade No. V			58.962 - 58.963 (2.3213 - 2.3214)
	Grade No. W			58.963 - 58.964 (2.3214 - 2.3214)
	Grade No. X			58.964 - 58.965 (2.3214 - 2.3215)
	Grade No. Y			58.965 - 58.966 (2.3215 - 2.3215)
	Grade No. 4			58.966 - 58.967 (2.3215 - 2.3215)
	Grade No. 7			58.967 - 58.968 (2.3215 - 2.3216)
Difference in inner diameter between cylinders	Standard			Less than 0.03 (0.0012)

PISTON, PISTON RING, AND PISTON PIN

Available Piston

Unit: mm (in)

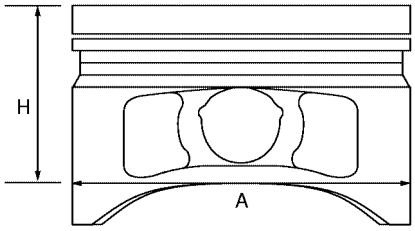

PBIC0188E

Piston skirt diameter “A”	Standard	Grade No. 1	88.980 - 88.990 (3.5031 - 3.5035)
		Grade No. 2	88.990 - 89.000 (3.5035 - 3.5039)
		Grade No. 3	89.000 - 89.010 (3.5039 - 3.5043)
		0.20 (0.0079) oversize (service)	89.180 - 89.210 (3.5110 - 3.5122)
“H” dimension			42 (1.65)
Piston pin bore diameter		Grade No. 0	19.993 - 19.999 (0.7871 - 0.7874)
		Grade No. 1	19.999 - 20.005 (0.7874 - 0.7876)
Piston clearance to cylinder block		Standard	0.010 - 0.030 (0.0004 - 0.0012)
		Limit	0.08 (0.0031)

Piston Ring

Unit: mm (in)

		Standard	Limit
Side clearance	Top	0.045 - 0.080 (0.0018 - 0.0031)	0.11 (0.0043)
	2nd	0.030 - 0.070 (0.0012 - 0.0028)	0.10 (0.0039)
	Oil ring	0.065 - 0.135 (0.0026 - 0.0053)	—
End gap	Top	0.21- 0.31 (0.0083 - 0.0122)	0.54 (0.0213)
	2nd	0.32 - 0.47 (0.0126 - 0.0185)	0.67 (0.0264)
	Oil (rail ring)	0.20 - 0.60 (0.0079 - 0.0236)	0.95 (0.0374)

Piston Pin

Unit: mm (in)

Piston pin outer diameter	Grade No.0	19.989 - 19.995 (0.7870 - 0.7872)
	Grade No.1	19.995 - 20.001 (0.7872 - 0.7874)
Piston to piston pin clearance (Standard)		0.002 - 0.006 (0.0001 - 0.0002)
Piston pin to connecting rod bushing clearance	Standard	0.005 - 0.017 (0.0002 - 0.0007)

CONNECTING ROD

Unit: mm (in)

Center distance		143.00 - 143.10 (5.63 - 5.63)
Bend [per 100 (3.94)]	Limit	0.15 (0.0059)
Torsion [per 100 (3.94)]	Limit	0.30 (0.0118)
Connecting rod small end inner diameter		22.000 - 22.012 (0.7874 - 0.7879)

Connecting rod small end inner diameter*	Grade No. 0	20.000 - 20.006 (0.7874 - 0.7876)
	Grade No. 1	20.006 - 20.012 (0.7876 - 0.7879)
Connecting rod big end inner diameter		48.000 - 48.013 (1.8898 - 1.8903)
Side clearance	Standard	0.20 - 0.35 (0.0079 - 0.0138)
	Limit	0.50 (0.0197)
Connecting rod bearing housing	Grade No. 0	48.000 - 48.001 (1.8898 - 1.8898)
	Grade No. 1	48.001 - 48.002 (1.8898 - 1.8898)
	Grade No. 2	48.002 - 48.003 (1.8898 - 1.8899)
	Grade No. 3	48.003 - 48.004 (1.8899 - 1.8899)
	Grade No. 4	48.004 - 48.005 (1.8899 - 1.8899)
	Grade No. 5	48.005 - 48.006 (1.8899 - 1.8900)
	Grade No. 6	48.006 - 48.007 (1.8900 - 1.8900)
	Grade No. 7	48.007 - 48.008 (1.8900 - 1.8901)
	Grade No. 8	48.008 - 48.009 (1.8901 - 1.8901)
	Grade No. 9	48.009 - 48.010 (1.8901 - 1.8902)
	Grade No. A	48.010 - 48.011 (1.8902 - 1.8902)
	Grade No. B	48.011 - 48.012 (1.8902 - 1.8902)
	Grade No. C	48.012 - 48.013 (1.8902 - 1.8903)

*: After installing in connecting rod

CRANKSHAFT

Unit: mm (in)

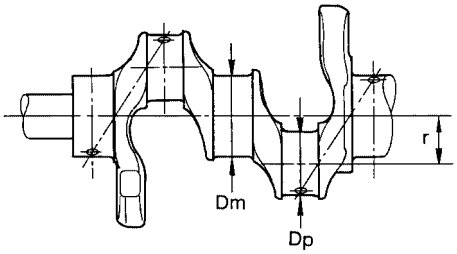

SEM645

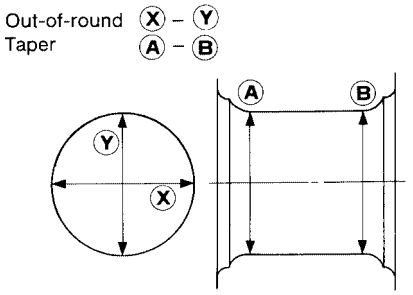

SEM715

Pin journal dia. “DP”	Grade No. A	44.974 - 44.973 (1.7706 - 1.7706)
	Grade No. B	44.973 - 44.972 (1.7706 - 1.7705)
	Grade No. C	44.972 - 44.971 (1.7705 - 1.7705)
	Grade No. D	44.971 - 44.970 (1.7705 - 1.7705)
	Grade No. E	44.970 - 44.969 (1.7705 - 1.7704)
	Grade No. F	44.969 - 44.968 (1.7704 - 1.7704)
	Grade No. G	44.968 - 44.967 (1.7704 - 1.7704)
	Grade No. H	44.967 - 44.966 (1.7704 - 1.7703)
	Grade No. J	44.966 - 44.965 (1.7703 - 1.7703)
	Grade No. K	44.965 - 44.964 (1.7703 - 1.7702)
	Grade No. L	44.964 - 44.963 (1.7702 - 1.7702)
	Grade No. M	44.963 - 44.962 (1.7702 - 1.7702)
	Grade No. N	44.962 - 44.961 (1.7702 - 1.7701)
	Grade No. P	44.961 - 44.960 (1.7701 - 1.7701)
	Grade No. R	44.960 - 44.959 (1.7701 - 1.7700)
	Grade No. S	44.959 - 44.958 (1.7700 - 1.7700)
	Grade No. T	44.958 - 44.957 (1.7700 - 1.7700)
	Grade No. U	44.957 - 44.956 (1.7700 - 1.7699)

Main journal dia. “Dm” grade	Grade No. A	54.979 - 54.978 (2.1645 - 2.1645)
	Grade No. B	54.978 - 54.977 (2.1645 - 2.1644)
	Grade No. C	54.977 - 54.976 (2.1644 - 2.1644)
	Grade No. D	54.976 - 54.975 (2.1644 - 2.1644)
	Grade No. E	54.975 - 54.974 (2.1644 - 2.1643)
	Grade No. F	54.974 - 54.973 (2.1643 - 2.1643)
	Grade No. G	54.973 - 54.972 (2.1643 - 2.1642)
	Grade No. H	54.972 - 54.971 (2.1642 - 2.1642)
	Grade No. J	54.971 - 54.970 (2.1642 - 2.1642)
	Grade No. K	54.970 - 54.969 (2.1642 - 2.1641)
	Grade No. L	54.969 - 54.968 (2.1641 - 2.1641)
	Grade No. M	54.968 - 54.967 (2.1641 - 2.1641)
	Grade No. N	54.967 - 54.966 (2.1641 - 2.1640)
	Grade No. P	54.966 - 54.965 (2.1640 - 2.1640)
	Grade No. R	54.965 - 54.964 (2.1640 - 2.1639)
	Grade No. S	54.964 - 54.963 (2.1639 - 2.1639)
	Grade No. T	54.963 - 54.962 (2.1639 - 2.1639)
	Grade No. U	54.962 - 54.961 (2.1639 - 2.1638)
	Grade No. V	54.961 - 54.960 (2.1638 - 2.1638)
	Grade No. W	54.960 - 54.959 (2.1638 - 2.1637)
	Grade No. X	54.959 - 54.958 (2.1637 - 2.1637)
	Grade No. Y	54.958 - 54.957 (2.1637 - 2.1637)
	Grade No. 4	54.957 - 54.956 (2.1637 - 2.1636)
	Grade No. 7	54.956 - 54.955 (2.1636 - 2.1636)
Center distance “r”		49.60 - 50.04 (1.9528 - 1.9701)
Out-of-round (X – Y)	Standard	Less than 0.005 (0.0002)
Taper (A – B)	Standard	Less than 0.005 (0.0002)
Runout [TIR*]	Limit	Less than 0.05 (0.002)
Free end play	Standard	0.10 - 0.26 (0.0039 - 0.0102)
	Limit	0.30 (0.0118)

*: Total indicator reading

MAIN BEARING

Unit: mm (in)

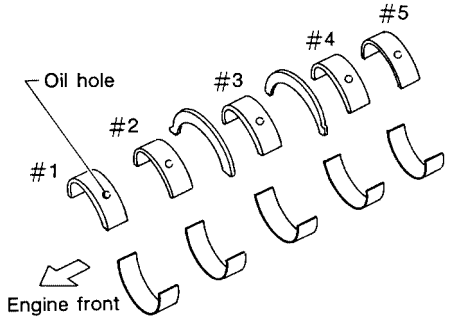

SEM685D

Grade number	Thickness	Identification color (UPR / LWR)	Remarks
0	1.973 - 1.976 (0.0777 - 0.0778)	Black	Grade and color are the same for upper and lower bearings.
1	1.976 - 1.979 (0.0778 - 0.0779)	Brown	
2	1.979 - 1.982 (0.0779 - 0.0780)	Green	
3	1.982 - 1.985 (0.0780 - 0.0781)	Yellow	
4	1.985 - 1.988 (0.0781 - 0.0783)	Blue	
5	1.988 - 1.991 (0.0783 - 0.0784)	Pink	
6	1.991 - 1.994 (0.0784 - 0.0785)	Purple	
7	1.994 - 1.997 (0.0785 - 0.0786)	White	

01	UPR	1.973 - 1.976 (0.0777 - 0.0778)	Black / Red	Grade and color are different for upper and lower bearings.
	LWR	1.976 - 1.979 (0.0778 - 0.0779)		
12	UPR	1.976 - 1.979 (0.0778 - 0.0779)	Red / Green	
	LWR	1.979 - 1.982 (0.0779 - 0.0780)		
23	UPR	1.979 - 1.982 (0.0779 - 0.0780)	Green / Yellow	
	LWR	1.982 - 1.985 (0.0780 - 0.0781)		
34	UPR	1.982 - 1.985 (0.0780 - 0.0781)	Yellow / Blue	
	LWR	1.985 - 1.988 (0.0781 - 0.0783)		
45	UPR	1.985 - 1.988 (0.0781 - 0.0783)	Blue / Pink	
	LWR	1.988 - 1.991 (0.0783 - 0.0784)		
56	UPR	1.988 - 1.991 (0.0783 - 0.0784)	Pink / Purple	
	LWR	1.991 - 1.994 (0.0784 - 0.0785)		
67	UPR	1.991 - 1.994 (0.0784 - 0.0785)	Purple / Orange	
	LWR	1.994 - 1.997 (0.0785 - 0.0786)		

Undersize

Unit: mm (in)

Size U.S.	Thickness	Main journal diameter
0.25 (0.0098)	2.106 - 2.114 (0.0829 - 0.0832)	Grind so that bearing clearance is the specified value.

Bearing Clearance

Unit: mm (in)

Main bearing oil clearance	Standard	No.1, 3, and 5	0.012 - 0.022 (0.0005 - 0.0009)
		No.2 and 4	0.018 - 0.028 (0.0007 - 0.0011)
	Limit		0.1 (0.004)

CONNECTING ROD BEARING

Grade number	Thickness mm (in)	Identification color (mark)
0	1.499 - 1.495 (0.0590 - 0.0589)	Black
1	1.503 - 1.499 (0.0592 - 0.0590)	Brown
2	1.507 - 1.503 (0.0593 - 0.0592)	Green
3	1.511 - 1.507 (0.0595 - 0.0593)	Yellow

Undersize

Unit: mm (in)

Size U.S.	Thickness	Crank pin journal diameter
0.25 (0.0098)	1.624 - 1.632 (0.0639 - 0.0643)	Grind so that bearing clearance is the specified value.

Bearing Clearance

Unit: mm (in)

Connecting rod bearing clearance	Standard	0.028 - 0.045 (0.0011 - 0.0018)
	Limit	0.10 (0.0039)

PRECAUTIONS

PFP:00001

Precautions for Supplemental Restraint System (SRS) “AIR BAG” and “SEAT BELT PRE-TENSIONER”

EBS00J5D

The Supplemental Restraint System such as “AIR BAG” and “SEAT BELT PRE-TENSIONER”, used along with a front seat belt, helps to reduce the risk or severity of injury to the driver and front passenger for certain types of collision. Information necessary to service the system safely is included in the SRS and SB section of this Service Manual.

WARNING:

- **To avoid rendering the SRS inoperative, which could increase the risk of personal injury or death in the event of a collision which would result in air bag inflation, all maintenance must be performed by an authorized NISSAN/INFINITI dealer.**
- **Improper maintenance, including incorrect removal and installation of the SRS, can lead to personal injury caused by unintentional activation of the system. For removal of Spiral Cable and Air Bag Module, see the SRS section.**
- **Do not use electrical test equipment on any circuit related to the SRS unless instructed to in this Service Manual. SRS wiring harnesses can be identified by yellow and/or orange harnesses or harness connectors.**

Precautions for Drain Coolant

EBS00J5E

- Drain coolant when engine is cooled.

Precautions for Disconnecting Fuel Piping

EBS00J5F

- Before starting work, make sure no fire or spark producing items are in the work area.
- Release fuel pressure before disassembly.
- After disconnecting pipes, plug openings to stop fuel leakage.

Precautions for Removal and Disassembly

EBS00J5G

- When instructed to use special service tools, use the specified tools. Always be careful to work safely, avoid forceful or uninstructed operations.
- Exercise maximum care to avoid damage to mating or sliding surfaces.
- Cover openings of engine system with tape or the equivalent, if necessary, to seal out foreign materials.
- Mark and arrange disassembly parts in an organized way for easy troubleshooting and assembly.
- When loosening nuts and bolts, as a basic rule, start with the one furthest outside, then the one diagonally opposite, and so on. If the order of loosening is specified, do exactly as specified. Power tools may be used where noted in the step.

Precautions for Inspection, Repair and Replacement

EBS00J5H

- Before repairing or replacing, thoroughly inspect parts. Inspect new replacement parts in the same way, and replace if necessary.

Precautions for Assembly and Installation

EBS00J5I

- Use torque wrench to tighten bolts or nuts to specification.
- When tightening nuts and bolts, as a basic rule, equally tighten in several different steps starting with the ones in center, then ones on inside and outside diagonally in this order. If the order of tightening is specified, do exactly as specified.
- Replace with new gasket, packing, oil seal or O-ring.
- Thoroughly wash, clean, and air-blow each part. Carefully check oil or coolant passages for any restriction and blockage.
- Avoid damaging sliding or mating surfaces. Completely remove foreign materials such as cloth lint or dust. Before assembly, oil sliding surfaces well.
- Release air within route after draining coolant.
- Before starting engine, apply fuel pressure to fuel lines with turning ignition switch ON (with engine stopped). Then make sure that there are no leaks at fuel line connections.

- After repairing, start engine and increase engine speed to check coolant, fuel, oil, and exhaust systems for leakage.

Parts Requiring Angular Tightening

EBS00J5J

- Use an angle wrench for the final tightening of the following engine parts:
  - Cylinder head bolts
  - Main bearing cap bolts
  - Connecting rod cap nuts
  - Crankshaft pulley bolt (No angle wrench is required as the bolt flange is provided with notches for angular tightening)
- Do not use a torque value for final tightening.
- The torque value for these parts are for a preliminary step.
- Ensure thread and seat surfaces are clean and coated with engine oil.

Precautions for Liquid Gasket

EBS00MXT

REMOVAL OF LIQUID GASKET SEALING

- After removing the bolts and nuts, separate the mating surface and remove the sealant using Tool.

  Tool number : KV10111100 (J-37228)

  CAUTION:
  Be careful not to damage the mating surfaces.
- In areas where the cutter is difficult to use, use a plastic hammer to lightly tap (1) the cutter where the RTV Silicone Sealant is applied. Use a plastic hammer to slide the cutter (2) by tapping on the side.

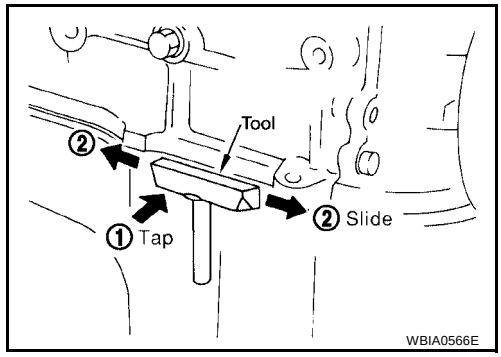

CAUTION:
If for some unavoidable reason a tool such as a flat-bladed screwdriver is used, be careful not to damage the mating surfaces.

LIQUID GASKET APPLICATION PROCEDURE

1. Using a scraper, remove the old Silicone RTV Sealant adhering to the gasket application surface and the mating surface.
   - Remove the sealant completely from the groove of the gasket application surface, bolts, and bolt holes.
2. Thoroughly clean the gasket application surface and the mating surface and remove adhering moisture, grease and foreign materials.
3. Attach the sealant tube to the tube presser.
   Use Genuine Silicone RTV Sealant or equivalent. Refer to GI-45, "RECOMMENDED CHEMICAL PRODUCTS AND SEALANTS" .

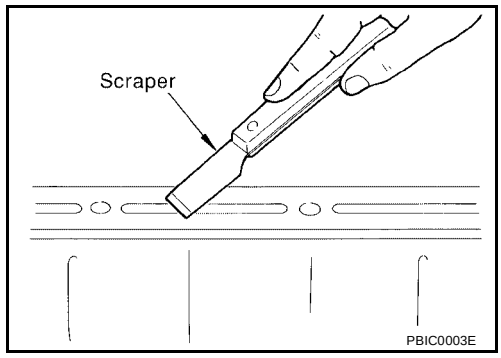

4. Apply the sealant using Tool without breaks to the specified location.

   Tube presser WS39930000 (–)
   - If there is a groove for the sealant application, apply the sealant to the groove.
   - As for the bolt holes, normally apply the sealant inside the holes. If specified, it should be applied outside the holes. Make sure to read the text of this manual.
   - Within five minutes of the sealant application, install the mating component.
   - If the sealant protrudes, wipe it off immediately.
   - Do not retighten after the installation.

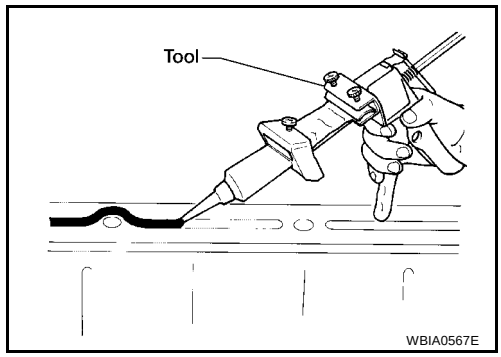

- After 30 minutes or more have passed from the installation, fill the engine with the specified oil and coolant. Refer to MA-12, "RECOMMENDED FLUIDS AND LUBRICANTS" .

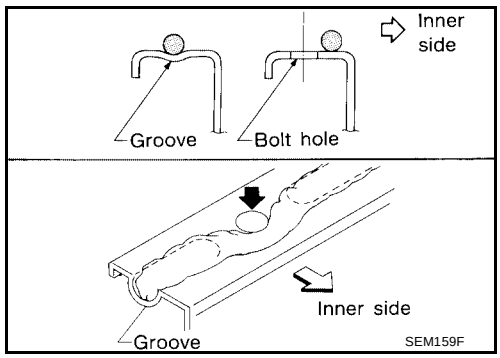

CAUTION:
Follow all specific instructions in this manual.

PREPARATION

PFP:00002

Special Service Tools

EBS00J5L

The actual shapes of Kent-Moore tools may differ from those of special service tools illustrated here.

Tool number (Kent-Moore No.) Tool name		Description
ST0501S000 (—) Engine stand assembly 1 ST05011000 (—) Engine stand 2 ST05012000 (—) Base	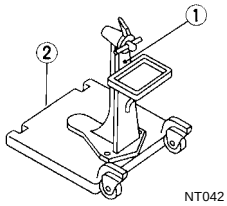	Disassembling and assembling
KV101J0010 (J-47242) Engine support table	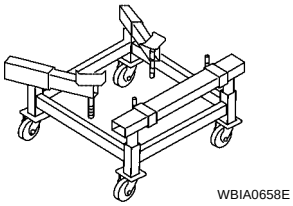	Engine and transmission assembly removal
KV10106500 (—) Engine stand shaft	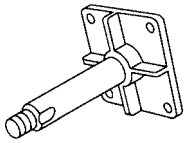	
KV10117000 (J-41262) Engine sub-attachment	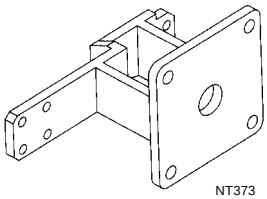	KV10117000 has been replaced with KV10117001 (KV10117000 is no longer in production, but it is usable).
KV10117001 (—) Engine sub-attachment	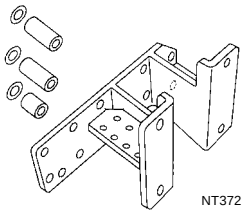	Installing on the cylinder block
ST10120000 (J-24239-01) Cylinder head bolt wrench	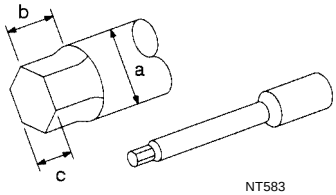	Loosening and tightening cylinder head bolt **a: 13 (0.51) dia.** **b: 12 (0.47)** **c: 10 (0.39)** Unit: mm (in)

Tool number (Kent-Moore No.) Tool name	Description
KV10116200 (J-26336-A) Valve spring compressor 1 KV10115900 (J-26336-20) Attachment 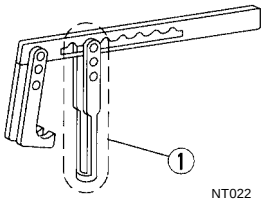	Disassembling valve mechanism
KV10107902 (J-38959) Valve oil seal puller 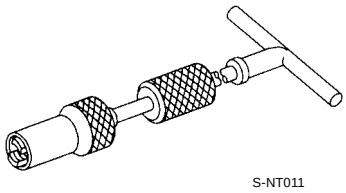	Removing valve oil seal
(J-39386) Valve oil seal drift 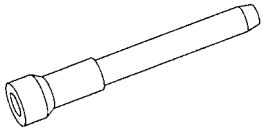	Installing valve oil seal
EM03470000 (J-8037) Piston ring compressor 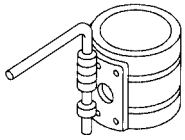	Installing piston assembly into cylinder bore
ST16610001 (J-23907) Pilot bushing puller 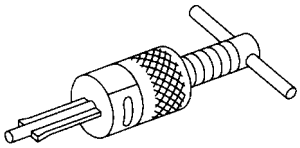	Removing crankshaft pilot bushing
— (J-47128) Seal installer 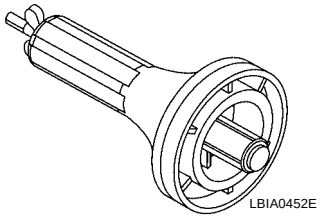	Installing rear main seal
KV10111100 (J-37228) Seal cutter 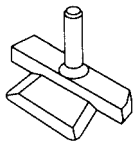	Removing steel oil pan and rear timing chain case

Tool number (Kent-Moore No.) Tool name		Description
WS39930000 (—) Tube presser	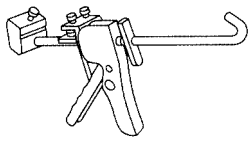	Pressing the tube of liquid gasket
KV10112100 (BT-8653-A) Angle wrench	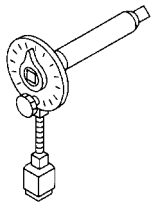	Tightening bolts for bearing cap, cylinder head, etc.
— (J-44626) Air fuel sensor Socket	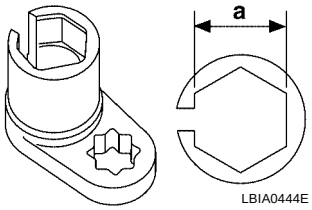	Loosening or tightening air fuel ratio A/F sensor **a: 22 mm (0.87 in)**
KV10114400 (J-38365) Heated oxygen sensor wrench	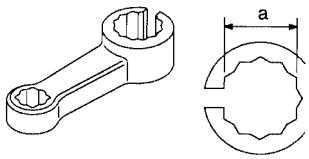	Loosening or tightening rear heated oxygen sensor **a: 22 mm (0.87 in)**
KV10117700 (J-44716) Ring gear stopper	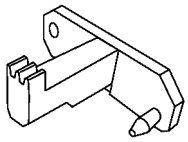	Removing and installing crankshaft pulley
KV10109300 Pulley holder	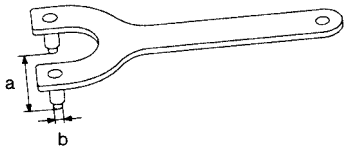	a: 68 mm (2.68 in) b: 8 mm (0.31 in)

Commercial Service Tools

EBS00J5M

(Kent-Moore No.) Tool name	Description
(BT-3373-F) Belt tension gauge 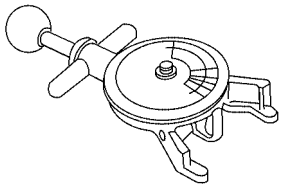 AMA126	Checking drive belt tension
Power tool 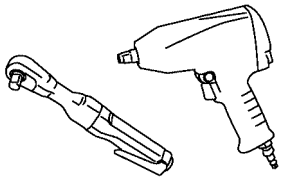 PBIC0190E	Loosening bolts and nuts
Spark plug wrench 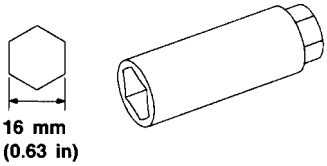 NT047	Removing and installing spark plug
Valve seat cutter set 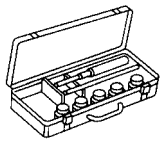 NT048	Finishing valve seat dimensions
Piston ring expander 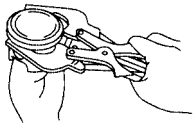 NT030	Removing and installing piston ring
Valve guide drift 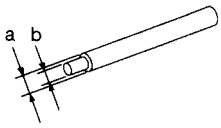 NT015	Removing and installing valve guide **Intake & Exhaust:** **a = 9.5 mm (0.374 in) dia.** **b = 5.5 mm (0.217 in) dia.**
Valve guide reamer 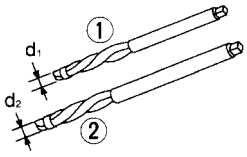 NT016	Reaming valve guide 1 or hole for oversize valve guide 2 **Intake & Exhaust:** **d_1 = 6.0 mm (0.236 in) dia.** **d_2 = 10.2 mm (0.402 in) dia.**

(Kent-Moore No.) Tool name		Description
(J-43897-18) (J-43897-12) Oxygen sensor thread cleaner	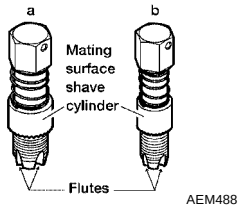	Reconditioning the exhaust system threads before installing a new oxygen sensor (Use with anti-seize lubricant shown below.) **a = J-43897-18 (18 mm dia.) for zirconia oxygen sensor** **b = J-43897-12 (12 mm dia.) for titania oxygen sensor**
Anti-seize lubricant (Permatex 133AR or equivalent meeting MIL specification MIL-A-907)		Lubricating oxygen sensor thread cleaning tool when reconditioning exhaust system threads
KV991J0100 (J-46531) T55 Torx® Bit	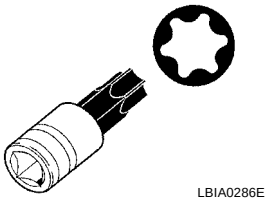	Removing and installing A/T drive plate and M/T flywheel bolts

NOISE, VIBRATION, AND HARSHNESS (NVH) TROUBLESHOOTING

PFP:00003

NVH Troubleshooting — Engine Noise

EBS00J5N

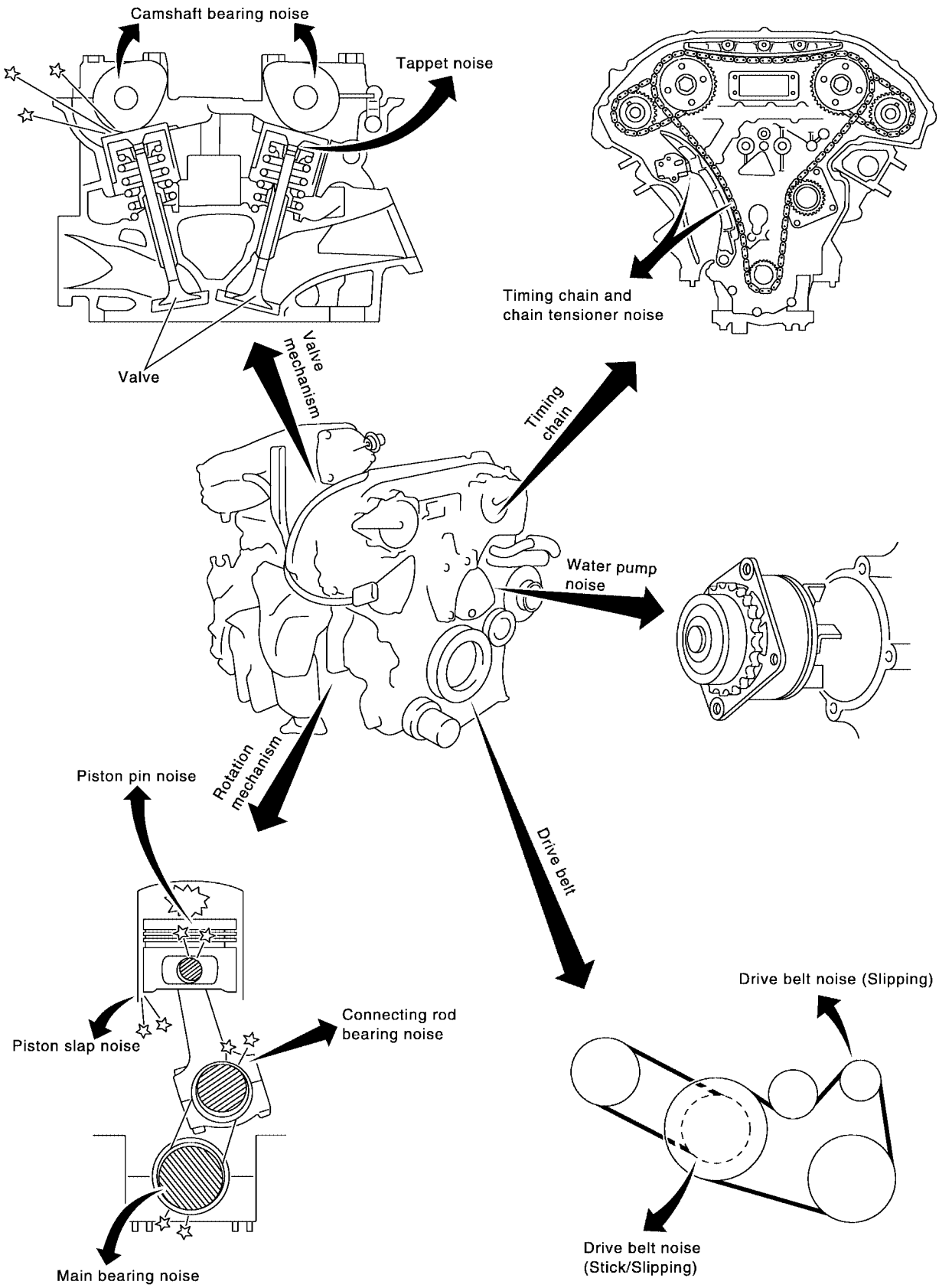

SEM706G

Use the Chart Below to Help You Find the Cause of the Symptom.

EBS00J5O

1. Locate the area where noise occurs.
2. Confirm the type of noise.
3. Specify the operating condition of engine.
4. Check specified noise source. Repair or replace the identified part as necessary.

Location of noise	Type of noise	Operating condition of engine						Source of noise	Check item	Reference page
		Before warm-up	After warm-up	When starting	When idling	When racing	While driving			
Top of engine Rocker cover Cylinder head	Ticking or clicking	C	A	—	A	B	—	Tappet noise	Valve clearance	EM-191
	Rattle	C	A	—	A	B	C	Camshaft bearing noise	Camshaft journal clearance Camshaft runout	EM-182
Crankshaft pulley Cylinder block (Side of engine) Oil pan	Slap or knock	—	A	—	B	B	—	Piston pin noise	Piston and piston pin clearance Connecting rod bushing clearance	EM-200
	Slap or rap	A	—	—	B	B	A	Piston slap noise	Piston-to-bore clearance Piston ring side clearance Piston ring end gap Connecting rod bend and torsion	EM-224
	Knock	A	B	C	B	B	B	Connecting rod bearing noise	Connecting rod bushing clearance (Small end) Connecting rod bearing clearance (Big end)	EM-224
	Knock	A	B	—	A	B	C	Main bearing noise	Main bearing oil clearance Crankshaft runout	EM-224
Front of engine Timing chain cover	Tapping or ticking	A	A	—	B	B	B	Timing chain and chain tensioner noise	Timing chain cracks and wear Timing chain tensioner operation	EM-161
Front of engine	Squeaking or fizzing	A	B	—	B	—	C	Drive belts (Sticking or slipping)	Drive belts deflection	EM-119
	Creaking	A	B	A	B	A	B	Drive belts (Slipping)	Idler pulley bearing operation	
	Squall Creak	A	B	—	B	A	B	Water pump noise	Water pump operation	CO-42

A: Closely related B: Related C: Sometimes related —: Not related

DRIVE BELTS

PFP:02117

Checking Drive Belts

EBS00J5P

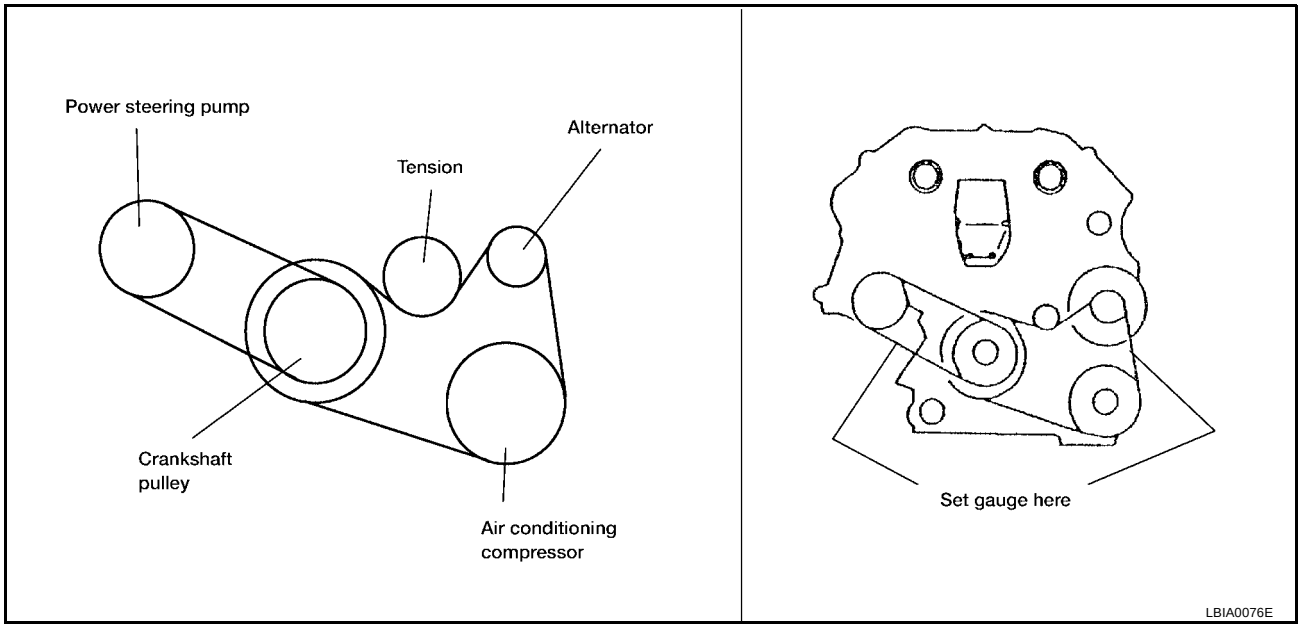

WARNING:

Inspect and check the drive belts with the engine off.

1. Inspect belt for cracks, fraying, wear or oil adhesion. If necessary, replace with a new one.
2. Inspect drive belt deflections by pushing on the belt midway between pulleys as shown.
3. Rotate the crankshaft pulley two times then check the belt tension using Tool.

Tool number : — (BT-3373-F)

NOTE:

- Inspect drive belt deflection or tension when engine is cold.
- Adjust if belt deflections exceed the limit or if belt tension is not within specifications.

Belt Deflection and Tension

	Deflection adjustment		Unit: mm (in)	Tension adjustment*		Unit: N (kg, lb)
	Used belt		New belt	Used belt		New belt
	Limit	After adjustment		Limit	After adjustment	
Alternator and air conditioning compressor	7 (0.28)	4.2 - 4.6 (0.17 - 0.18)	3.7 - 4.1 (0.15 - 0.16)	294 (30, 66)	730 - 818 (74.5 - 83.5, 164 - 184)	838 - 926 (85.5 - 94.5, 188 - 208)
Power steering pump	11 (0.43)	7.3 - 8.0 (0.29 - 0.31)	6.5 - 7.2 (0.26 - 0.28)	196 (20, 44)	495 - 583 (50.5 - 59.5, 111 - 131)	603 - 691 (61.5 - 70.5, 135.6 - 155.4)
Applied pushing force	98 N (10 kg, 22 lb)			—		

*: If belt tension gauge cannot be installed at check points shown, check drive belt tension at different location on the belt.

AIR CLEANER AND AIR DUCT

PFP:16500

Removal and Installation

EBS00J5Q

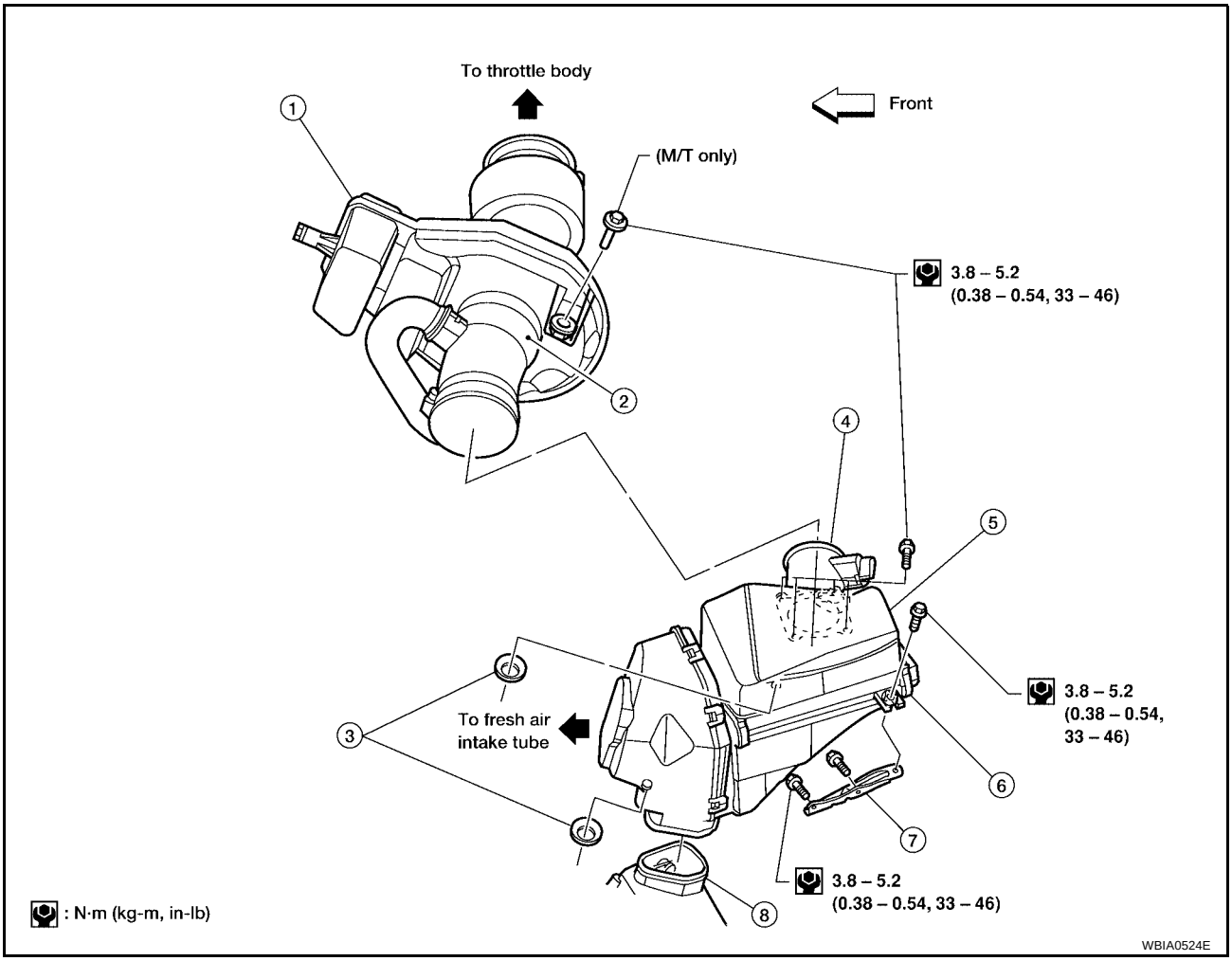

1. Resonator	2. Air cleaner to electric throttle control actuator tube	3. Grommet
4. Mass air flow sensor	5. Air cleaner case (upper)	6. Air cleaner case (lower)
7. Air cleaner case mounting bracket	8. Resonator in fender	

REMOVAL

1. Disconnect the harness connector from the mass air flow sensor.
2. Disconnect the tube clamp at the electric throttle control actuator and at the fresh air intake tube.
3. Remove air cleaner to electric throttle control actuator tube, air cleaner case (upper) with the mass air flow sensor attached.
4. Remove mass air flow sensor from air cleaner case (upper), as necessary.

   CAUTION:
   Handle mass air flow sensor with care.
   - **Do not shock it.**
   - **Do not disassemble it.**
   - **Do not touch its sensor.**
5. Remove resonator in the fender, lifting left fender protector, as necessary.

INSTALLATION

Installation is in the reverse order of removal.

CHANGING AIR CLEANER ELEMENT

1. Unhook the air cleaner case side clips and lift up the air cleaner case (upper).

2. Remove the air cleaner element.
3. Install a new air cleaner element.
4. Installation is in the reverse order of removal.

INTAKE MANIFOLD COLLECTOR

PFP:14010

Removal and Installation

EBS00J5R

SEC. 140 • 147 • 163

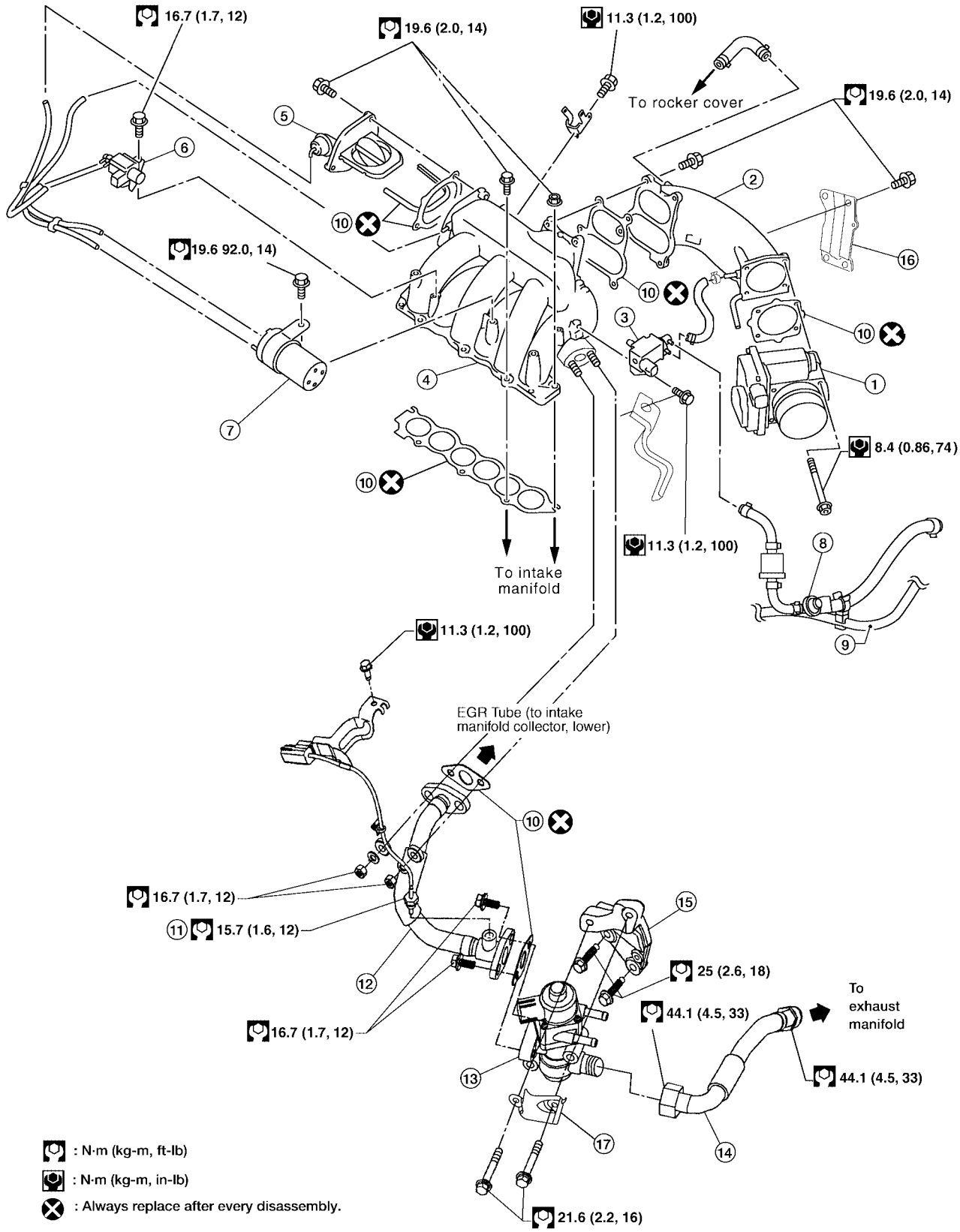

WBIA0592E

1. Electric throttle control actuator	2. Intake manifold collector (upper)	3. EVAP canister purge volume control solenoid valve
4. Intake manifold collector (lower)	5. Power valve	6. VIAS control solenoid valve
7. Vacuum tank	8. Service port	9. Fuel hose
10. Gasket	11. EGR temperature sensor	12. EGR tube (to lower intake manifold collector)
13. EGR volume control valve	14. EGR tube (to exhaust manifold)	15. EGR volume control valve bracket
16. Intake manifold collector (lower) support bracket	17. EGR volume control valve cover	

REMOVAL

WARNING:

- **To avoid the danger of being scalded, never drain the coolant when the engine is hot.**
- **The gasket for intake manifold collector (upper) is secured together with intake manifold collector (lower) bolt. Thus, when replacing only the upper gasket the lower gasket must also be replaced.**

1. Remove the cowl top. Refer to EI-18, "Removal and Installation" .
2. Remove the windshield wiper assembly. Refer to WW-27, "Removal and Installation" .
3. Remove the engine cover using power tool.
4. Remove air cleaner case lid and mass air flow sensor, and air intake tube as an assembly.
   Refer to EM-120, "Removal and Installation" .
5. Partially drain the coolant when the engine is cool. Refer to CO-10, "DRAINING ENGINE COOLANT" .
6. Disconnect the following:
   - Power brake booster vacuum hose
   - Coolant hoses from the intake manifold collector
   - Swirl control vacuum lines to power valve and intake manifold collector upper
   - Fuel injector electrical connectors
   - PCV hose
   - Electric throttle control actuator electrical connector
   - EVAP canister purge hose
   - EGR temperature sensor electrical connector

   CAUTION:
   - **Cover any engine openings to avoid the entry of any foreign material.**
7. Remove the EGR tube (to lower intake manifold collector) nuts.
8. Disconnect the power steering hose bracket from the rear of the intake manifold collector.

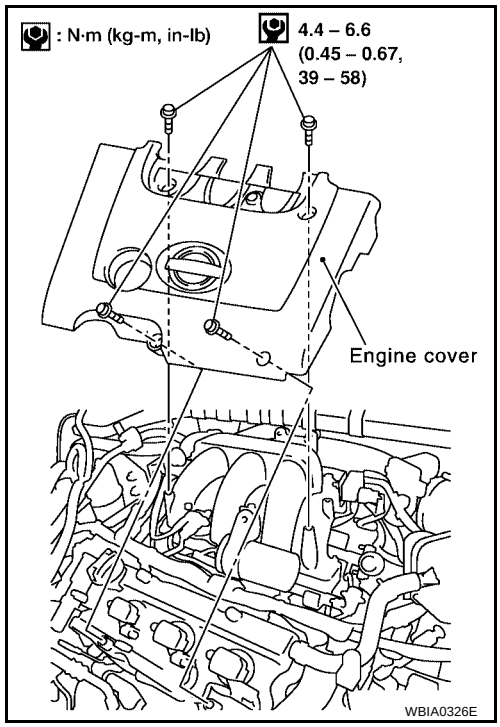

9. Remove the EVAP canister purge volume solenoid valve bracket bolt. Position the valve aside.
10. Remove the VIAS control solenoid valve bracket bolt. Position the valve aside.
11. Remove the vacuum tank.
12. Remove the intake manifold collector support bracket from the back of the intake manifold collector using power tool.

13. Loosen the intake manifold collector bolts in the order as shown using power tool, and remove the intake manifold collector and gasket.

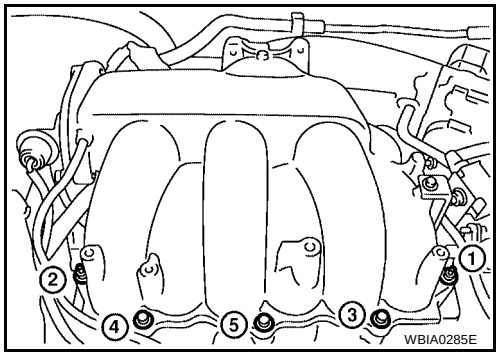

14. If necessary, remove the electric throttle control actuator bolts in the order as shown and remove the electric throttle control actuator.

CAUTION:
- **Handle carefully to avoid any shock to the electric throttle control actuator.**
- **Do not disassemble.**

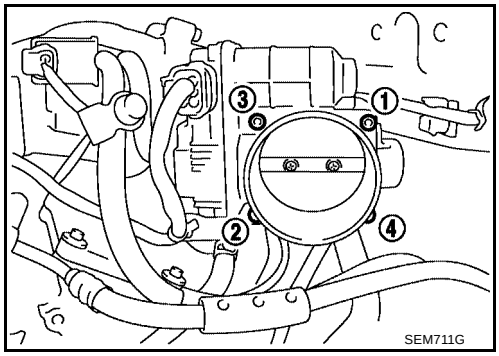

15. If necessary, remove the intake manifold collector (upper) bolts in the order as shown, using power tool and remove the intake manifold collector.

CAUTION:
Handle carefully to avoid any shock to the electric throttle control actuator, if installed.

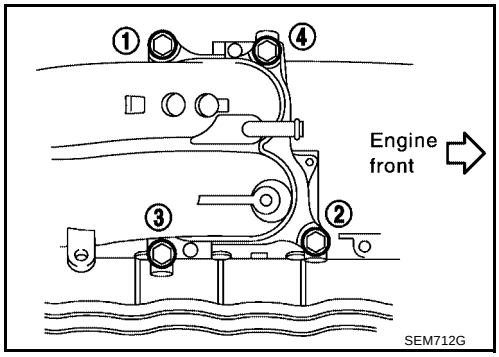

16. If necessary, remove power valve bolts in the order as shown and remove the power valve.

NOTE:
The power valve must be held in the closed position during installation.

17. If necessary remove the following components:
- Vacuum tank
- VIAS control solenoid valve
- EVAP canister purge volume control solenoid valve

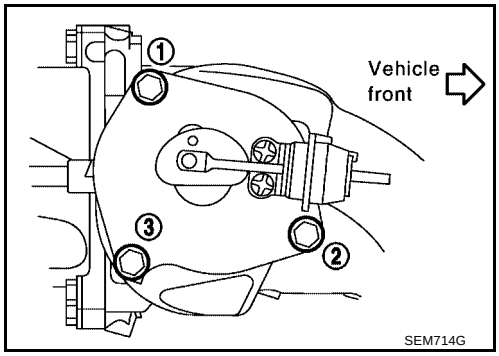

INSTALLATION

Installation is in the reverse order of removal, paying attention to the following:

NOTE:
After installation, it is necessary to re-calibrate the electric throttle control actuator as follows:

1. Perform the ″Throttle Valve Closed Position Learning″ when harness connector of the electric throttle control actuator is disconnected. Refer to EC-684, "Throttle Valve Closed Position Learning" .
2. Perform the ″idle Air Volume Learning″ when the electric throttle control actuator is replaced. Refer to EC-684, "Idle Air Volume Learning" .

- If necessary, install power valve bolts in the order as shown.

  Power valve bolts : 17.6 - 21.6 N·m (1.8 - 2.2 kg-m, 13 - 15 ft-lb)

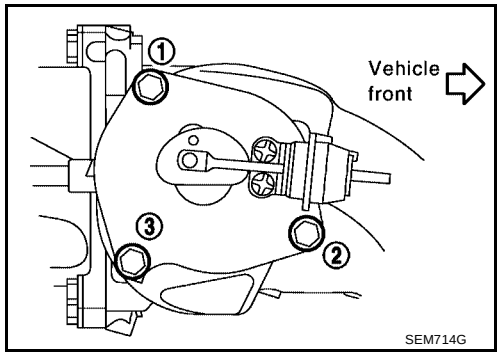

- If necessary, tighten the intake manifold collector pipe bolts in the order as shown.

  Intake manifold collector pipe bolts : 17.6 - 21.6 N·m (1.8 - 2.2 kg-m, 13 - 15 ft-lb)

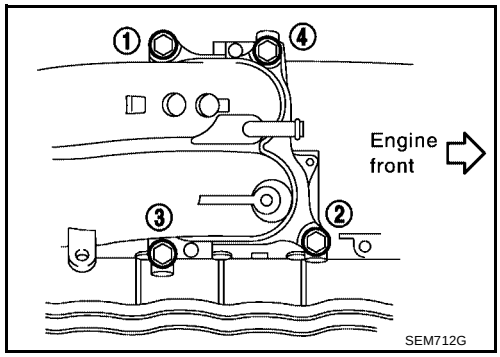

- If necessary, install the electric throttle control actuator bolts in the order as shown. Install gasket with three protrusions facing down.

  Electric throttle control actuator bolts : 7.2 - 9.6 N·m (0.74 - 0.97 kg-m, 64 - 84 in-lb)

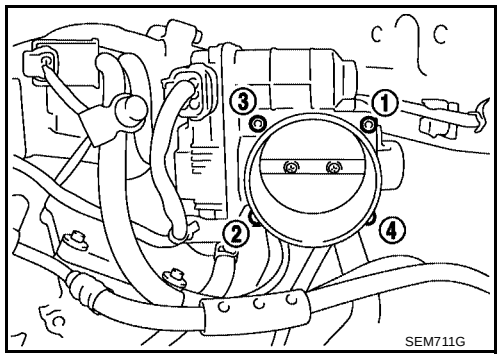

- Install the intake manifold collector bolts in the order as shown.

  Intake manifold collector bolts : 17.6 - 21.6 N·m (1.8 - 2.2 kg-m, 13 - 15 ft-lb)

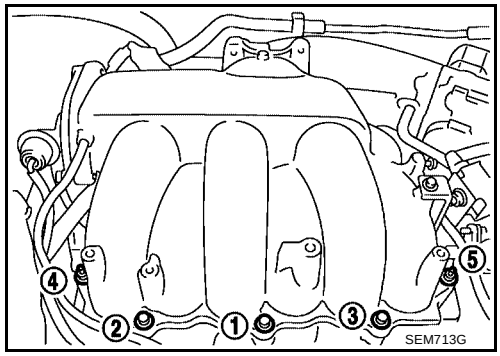

EGR VOLUME CONTROL VALVE

PFP:14710

Removal and Installation

EBS00J5S

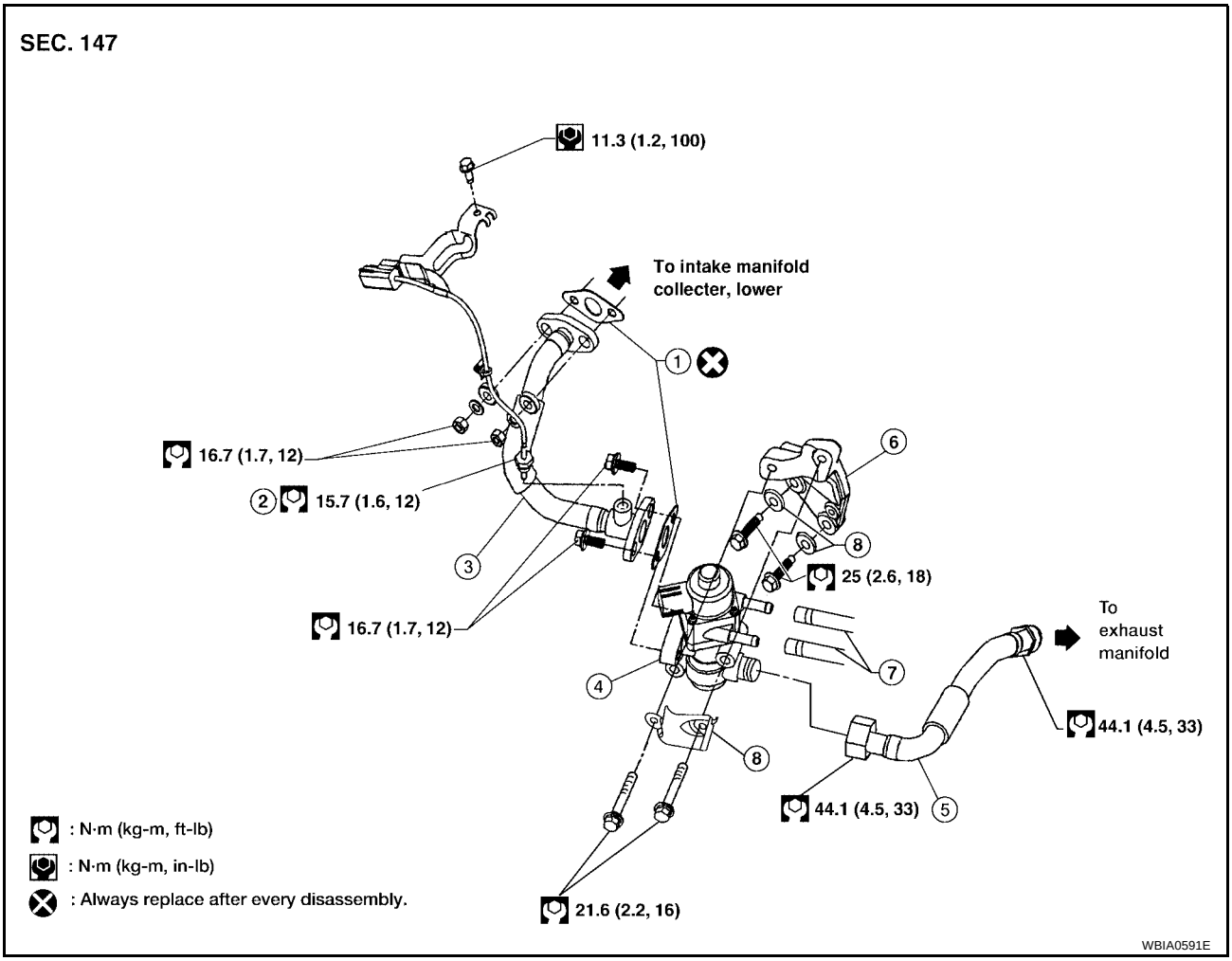

1. Gasket	2. EGR temperature sensor	3. EGR tube (to lower intake manifold collector)
4. EGR volume control valve	5. EGR tube (to exhaust manifold)	6. EGR volume control valve bracket
7. Coolant lines	8. EGR volume control valve cover	

REMOVAL

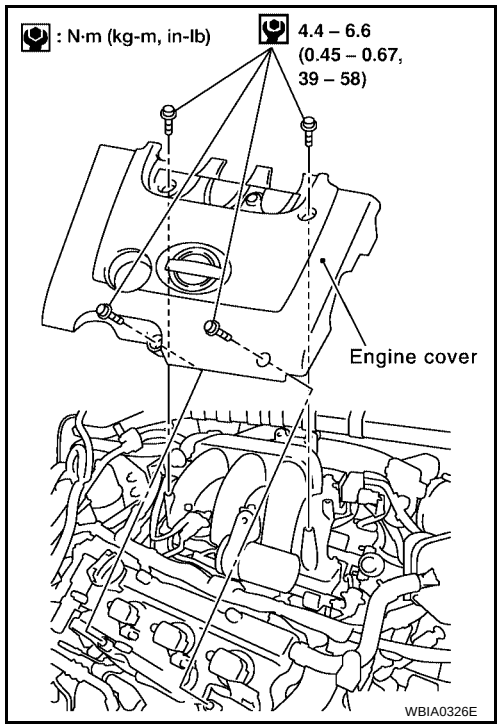

1. Remove the engine cover using power tool.
2. Remove air cleaner case lid and mass air flow sensor, and air intake tube as an assembly. Refer to EM-120, "Removal and Installation" .
3. Partially drain the coolant when the engine is cool. Refer to CO-31, "DRAINING ENGINE COOLANT" .

CAUTION:
Cover any engine openings to avoid the entry of any foreign material.

4. Disconnect the EGR temperature sensor electrical connector and bracket.
5. If necessary, remove the EGR temperature sensor.
6. Disconnect the EGR volume control valve electrical connector.
7. Remove the EGR tube (to intake manifold collector) bolts at the intake manifold collector.
8. Remove the EGR tube (to intake manifold collector) bolts at the EGR volume control valve and remove the tube.
9. Loosen the EGR tube (to exhaust manifold) to EGR volume control valve fitting.
10. If necessary remove the EGR tube (to exhaust manifold) as follows:

a. Remove the front cowl grille. Refer to EI-18, "Removal and Installation" .
b. Remove the windshield wiper assembly. Refer to WW-27, "Removal and Installation" .
c. Remove the EGR tube (to exhaust manifold) to EGR volume control valve fitting.
d. Disconnect the air fuel ratio (A/F) sensor 1 (bank 1).
e. Remove the RH heat shield.
f. Remove the EGR tube (to exhaust manifold) to exhaust manifold fitting.

11. Disconnect the coolant lines at the EGR volume control valve.
12. Remove the EGR volume control valve bolts and the valve.

INSTALLATION

Installation is in the reverse order of removal.

- Install the RH heat shield bolts.

RH heat shield bolts	**: 5.1 - 6.5 N·m (0.52 - 0.66 kg-m, 46 - 57 in-lb)**

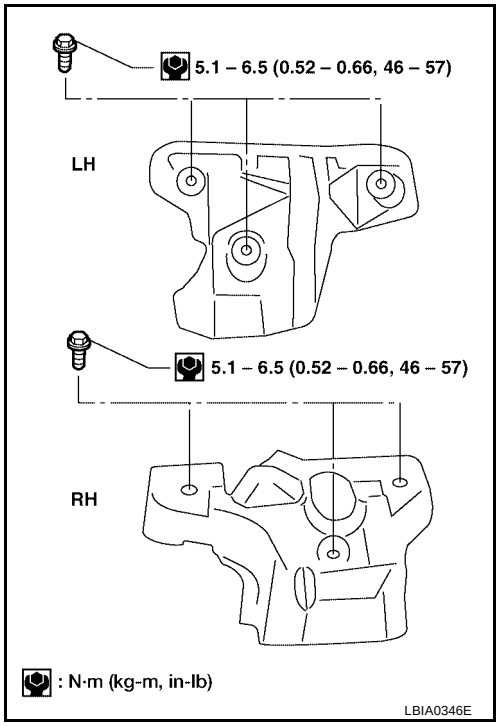

INTAKE MANIFOLD

PFP:14003

Removal and Installation

EBS00J5T

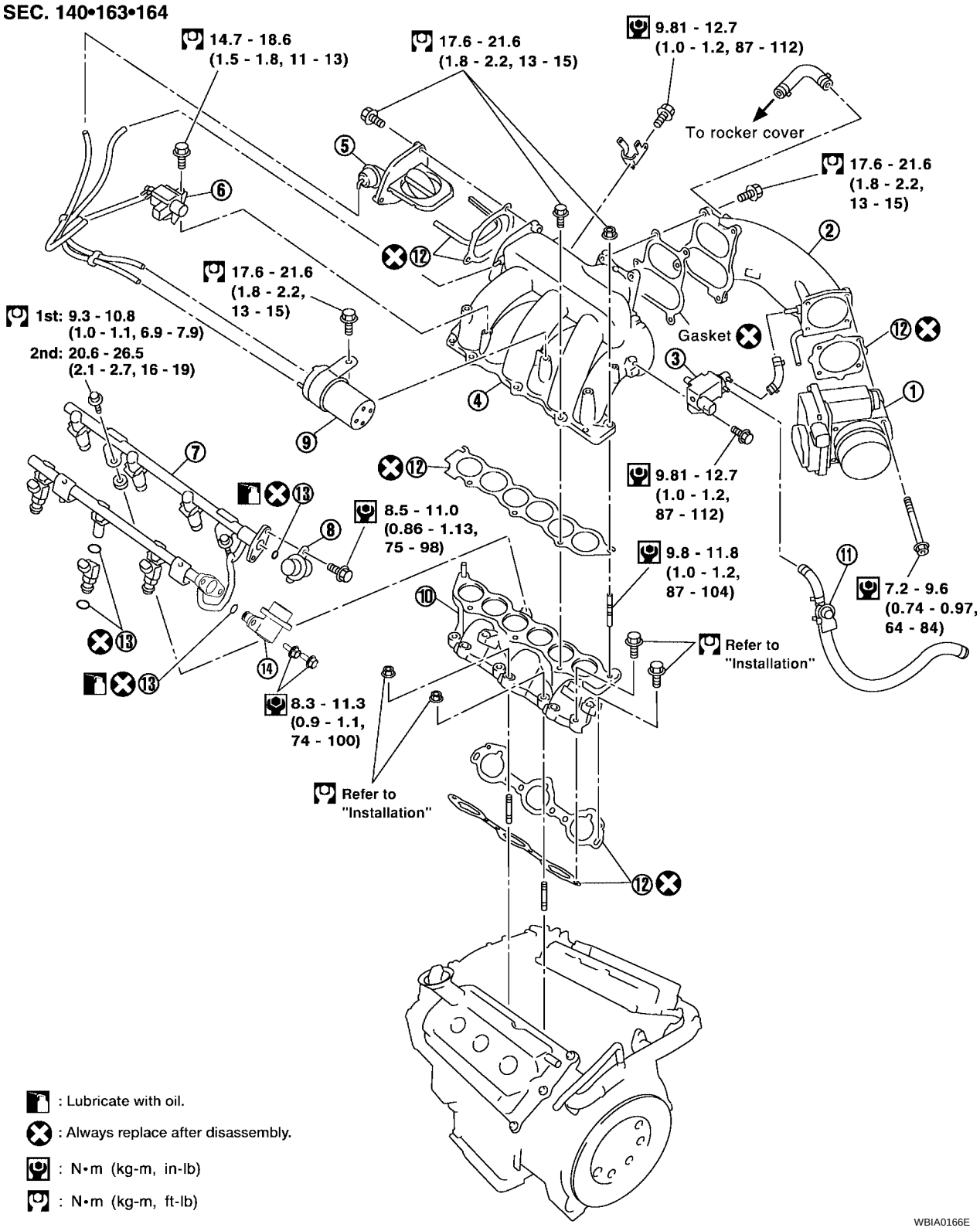

1.	Electric throttle control actuator	2.	Intake manifold collector (upper)	3.	EVAP canister purge volume control solenoid valve
4.	Intake manifold collector (lower)	5.	Power valve	6.	VIAS control solenoid valve
7.	Fuel tube	8.	Fuel damper	9.	Vacuum tank

10. Intake manifold
11. Service port
12. Gasket
13. O-ring
14. Fuel damper

REMOVAL

WARNING:
To avoid the danger of being scalded, never drain the coolant when the engine is hot.

1. Remove the engine cover with power tool.
2. Release the fuel pressure. Refer to EC-84, "FUEL PRESSURE RELEASE" .
3. Remove air cleaner case lid and mass air flow sensor, and air intake tube as an assembly. Refer to EM-120, "Removal and Installation" .
4. Partially drain the coolant when the engine is cool. Refer to CO-31, "DRAINING ENGINE COOLANT" .
5. Disconnect fuel tube quick connector at vehicle piping side.
6. To remove the quick connector cap, hold the sides of the connector, push in the tabs and pull out the tube.

   NOTE:
   If the connector and the tube are stuck together, push and pull several times until they start to move. Then disconnect them by pulling.

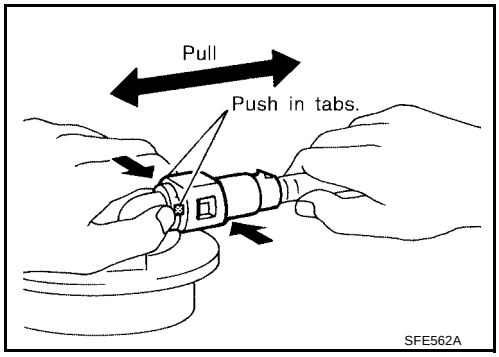

   CAUTION:
   - **The tube can be removed when the tabs are completely depressed. Do not twist it more than necessary.**
   - **Do not use any tools to remove the quick connector.**
   - **Keep the resin tube away from heat. Be especially careful when welding near the tube.**
   - **Prevent acid liquids such as battery electrolyte, etc. from getting on the resin tube.**
   - **Do not bend or twist the tube during removal or installation.**
   - **Do not remove the remaining retainer on the tube**
   - **When the tube is replaced, also replace the retainer with a new one.**
   - **To keep the connecting portion clean and to avoid damage and foreign materials entering, cover the ends of the fuel tubes with plastic bags or something similar.**

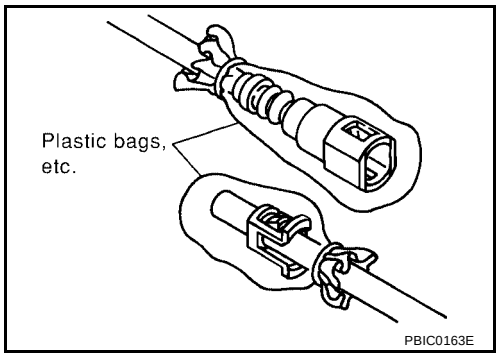

7. Disconnect the power brake booster vacuum hose, the coolant hoses from the electric throttle control actuator, the swirl control vacuum lines, the fuel injectors electrical connectors, and the PCV hose.

   CAUTION:
   - **Cover any engine openings to avoid the entry of any foreign material.**
8. Disconnect the electric throttle control actuator electrical connectors.
9. Remove the cowl top grille and the windshield wiper assembly. Refer to EI-18, "Removal and Installation" .
10. Disconnect the power steering hose bracket.
11. Remove the vacuum tank from the back of the intake manifold collector.
12. Remove the intake manifold collector pipe and electric throttle control actuator by loosening the four bolts in a diagonal pattern.

    CAUTION:
    Handle carefully to avoid any shock to the electric throttle control actuator.

13. Loosen the bolts in the order as shown, and remove the intake manifold collector with power tool.
14. Remove the fuel rail with the fuel injectors attached, from the intake manifold. Remove the fuel injector O-rings and use new O-rings for installation.

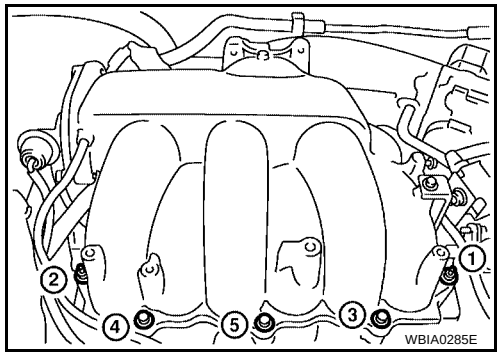

15. Loosen the bolts in the order as shown, and remove the intake manifold with power tool.

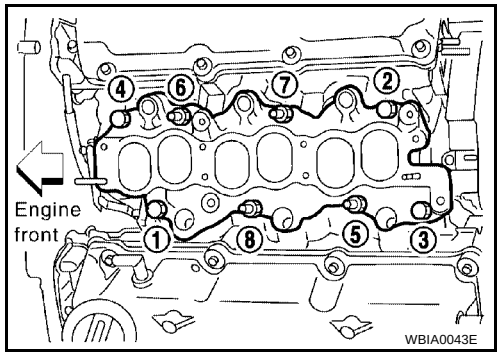

INSPECTION AFTER REMOVAL

Surface Distortion

- Using straightedge and feeler gauge, inspect the surface distortion of both the intake manifold and the intake manifold collector.

Standard : 0.1 mm (0.004 in)

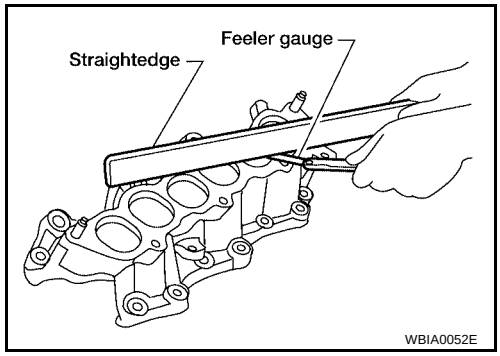

INSTALLATION

Installation is in the reverse order of removal. Follow the procedures below for specific tightening sequences and procedures.

- Install intake manifold bolts in two stages in the numerical order as shown.

Stage 1 : 5- 10 N·m (0.5 - 1.0 kg-m, 44 - 86 in-lb)
Stage 2 : 26 - 31 N·m (2.7 - 3.2 kg-m, 20 - 23 ft-lb)

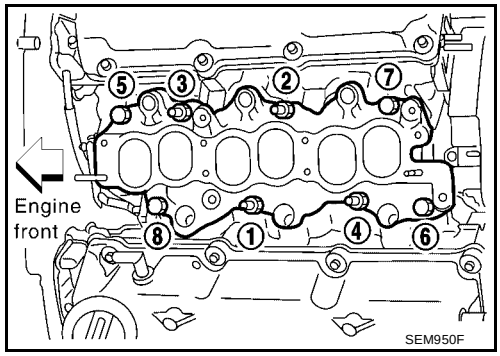

- Seat the fuel injectors into the intake manifold with new O-rings. Tighten the fuel rail bolts as shown, in two stages:

  Stage 1 : 9.3 - 10.8 N·m (0.95 - 1.1 kg-m, 83 - 95 in-lb)

  Stage 2 : 20.6 - 26.5 N·m (2.1 - 2.7 kg-m, 16 - 19 ft-lb)

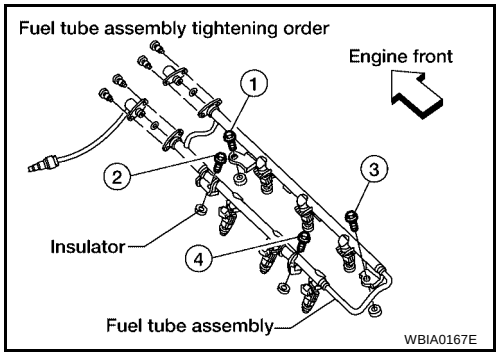

- Install the intake manifold collector bolts in the numerical order as shown.

  Intake manifold collector bolts : 18 - 21 N·m (1.8 - 2.2 kg-m, 13 - 15 ft-lb

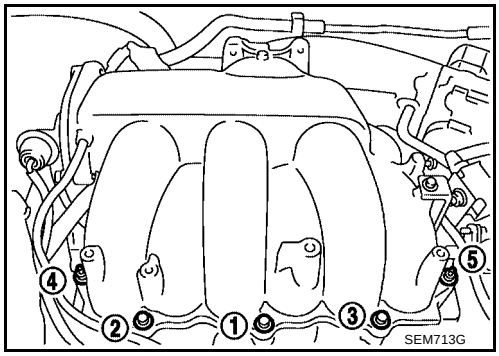

- Tighten the bolts of the intake manifold collector pipe and electric throttle control actuator assembly equally and diagonally to specification.

  Intake manifold collector pipe bolts : 18 - 21 N·m (1.8 - 2.2 kg-m, 13 - 15 ft-lb)

NOTE:
After installation, it is necessary to re-calibrate the electric throttle control actuator as follows:

1. Perform the "Throttle Valve Closed Position Learning" when harness connector of the electric throttle control actuator is disconnected. Refer to EC-684, "Throttle Valve Closed Position Learning" .
2. Perform the "Idle Air Volume Learning" when the electric throttle control actuator is replaced. Refer to EC-684, "Idle Air Volume Learning" .

- Install the quick connector as follows:
  - Make sure no foreign substances are deposited in and around the fuel tube and quick connector and that there is no damage.
  - Align the center to insert the quick connector straight onto the fuel tube.
  - Insert the fuel tube until a click is heard.
  - Install the quick connector cap on the quick connector joint. Align the arrow mark on the quick connector cap to the upper side.
  - Install the fuel hose into the hose clamp.

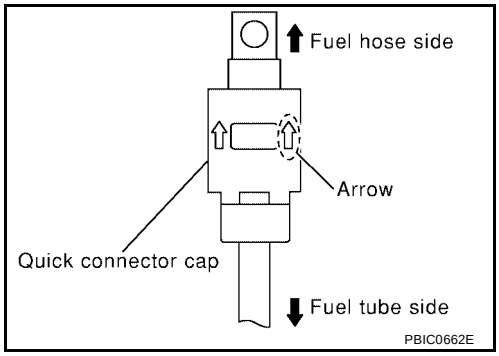

INSPECTION AFTER INSTALLATION

Make sure there is no fuel leakage at connections as follows:

1. Apply fuel pressure to fuel lines by turning ignition switch ON (with engine stopped). Then check for fuel leaks at connections.
2. Start the engine and rev it up and check for fuel leaks at connections.

NOTE:
Use mirrors for checking on connections out of the direct line of sight.

CAUTION:
Do not touch engine immediately after stopping as engine is extremely hot.

- Perform procedures for “Throttle Valve Closed Position Learning” after finishing repairs. Refer to EC-684, "Throttle Valve Closed Position Learning" .
- If electric throttle control actuator is replaced, perform procedures for “Idle Air Volume Learning” after finishing repairs. Refer to EC-684, "Idle Air Volume Learning" .

EXHAUST MANIFOLD AND THREE WAY CATALYST

PFP:14004

Removal and Installation

EBS00J5U

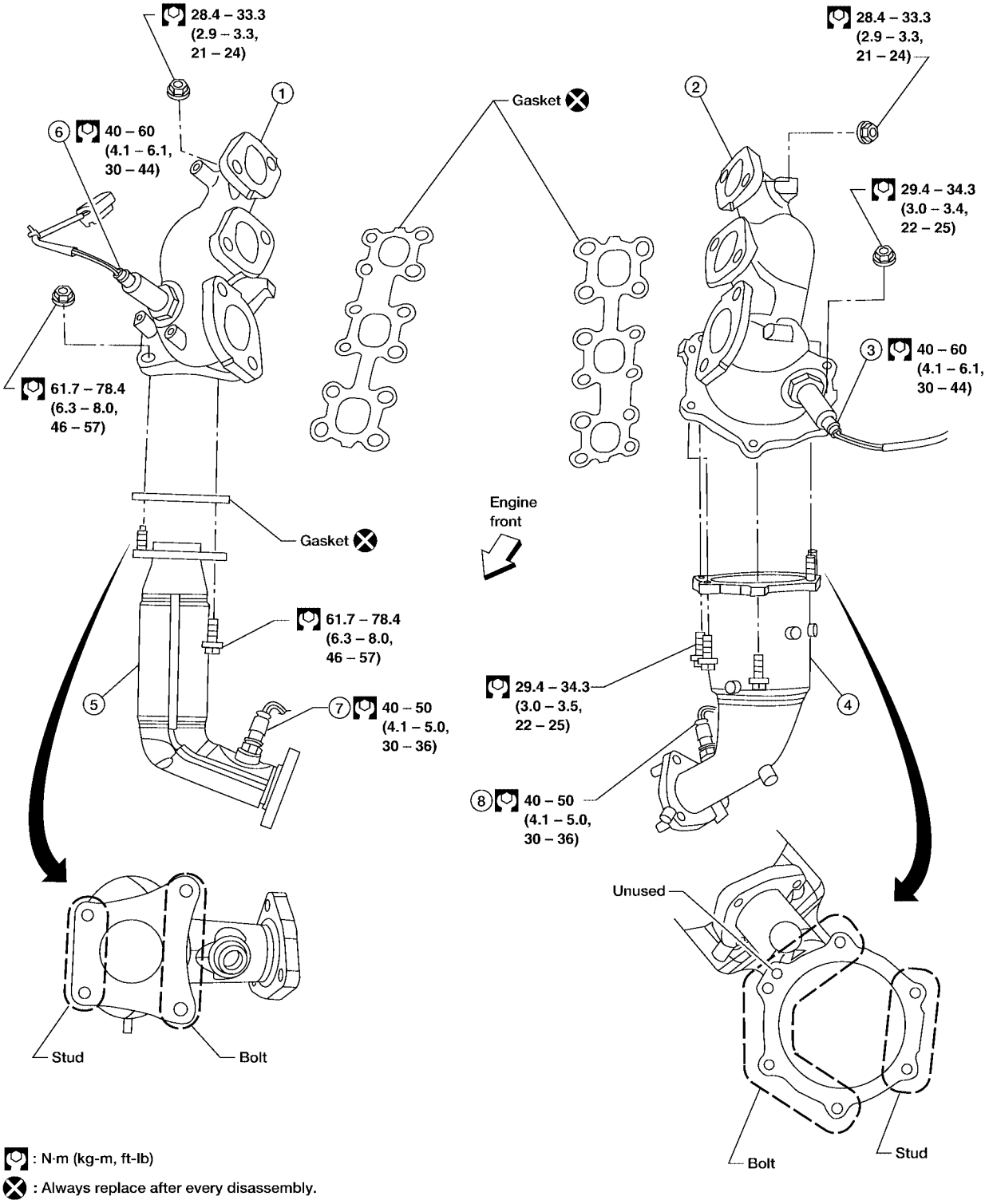

WBIA0267E

1. Exhaust manifold (RH bank)
2. Exhaust manifold (LH bank)
3. Air fuel ratio (A/F) sensor 1 (bank 2)
4. Three way catalyst (manifold) (bank 2)
5. Three way catalyst (manifold) (bank 1)
6. Air fuel ratio (A/F) sensor 1 (bank 1)
7. Heated oxygen sensor 2 (front) (bank 1)
8. Heated oxygen sensor 2 (front) (bank 2)

REMOVAL

WARNING:

- **Perform the work when the exhaust and cooling system have completely cooled down.**
- **When removing the front and rear engine mounting through bolts and nuts, lift the engine up slightly for safety. For engine slingers, refer to EM-220, "REMOVAL" .**

1. Remove the front wheel and tires using power tool.
2. Remove the engine undercover.
3. Remove the inner wheel well splash shields.
4. Remove the radiator and cooling fan assembly. Refer to CO-34, "REMOVAL" .
5. Remove the front exhaust tube. Refer to EX-7, "Removal and Installation" .
6. Remove the front suspension member. Refer to FSU-15, "Removal and Installation" .
7. Remove the RH and LH three way catalyst support bolts in the order as shown.

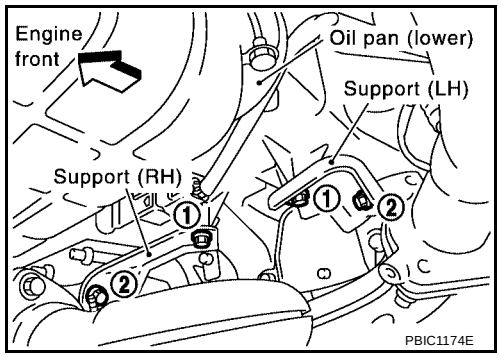

8. Remove heated oxygen sensor 2 (bank 1), heated oxygen sensor 2 (bank 2), air fuel ratio (A/F) sensor 1 (bank 1) and air fuel ratio (A/F) sensor 1 (bank 2).

a. Remove harness connector of each sensor, and disconnect the harness from the bracket and middle clamp.

b. Remove both heated oxygen sensors and air fuel ratio (A/F) sensors using Tool.

Tool numbers : KV10114400 (J-38365)
: — (J-44626)

CAUTION:

- **Be careful not to damage heated oxygen sensors or air fuel ratio (A/F) sensors.**
- **Discard any heated oxygen sensor which has been dropped from a height of more than 0.5 m (19.7 in) onto a hard surface such as a concrete floor; replace with a new sensor.**

9. Remove exhaust manifold and three way catalyst heat shields with power tool.
10. Remove the three way catalyst (manifold) (bank 1) and three way catalyst (manifold) (bank 2) by loosening the bolts first and then removing the nuts and through bolts.
11. Remove the exhaust manifolds. Loosen the exhaust manifold nuts in the order as shown.

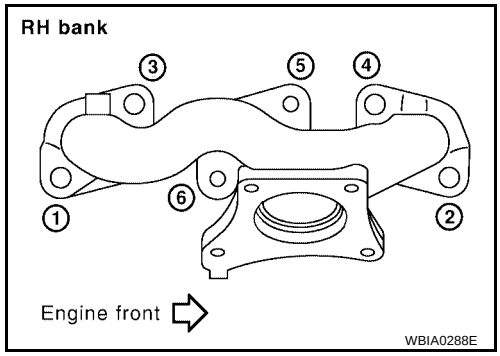

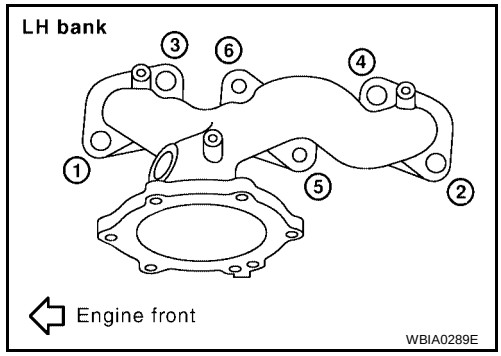

INSPECTION AFTER REMOVAL

Surface Distortion

- Use a reliable straightedge and feeler gauge to check the flatness of the exhaust manifold mating surfaces.

  Limit : 0.15mm (0.006 in)

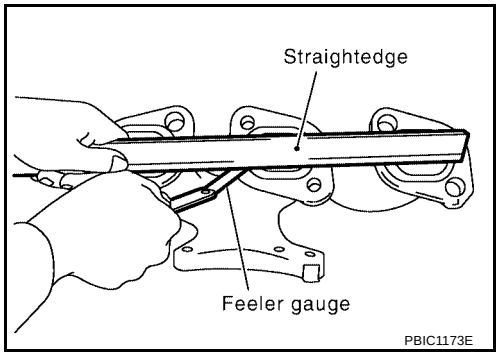

INSTALLATION

Installation is in the reverse order of removal.

- Install the exhaust manifold nuts in the order as shown.

  Exhaust manifold nuts : 28.4 - 33.3 N·m (2.9 - 3.3 kg-m, 21 - 24 lb-ft)

  CAUTION:

  - **When using the heated oxygen sensor wrench, tighten to the middle of specified torque range, because the length of the Tool may increase the actual tightness. Do not tighten to the maximum specified torque range.**

    Tool numbers : KV10114400 (J-38365)
    : — (J-44626)

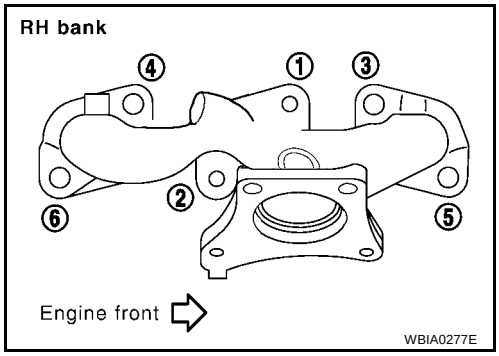

  - **Before installing a heated oxygen sensor or air fuel ratio (A/F) sensor, clean the exhaust manifold threads using the oxygen sensor thread cleaner tool, and apply anti-seize lubricant.**

    Tool numbers : J-43897-18
    : J-43897-12

  - **Do not over-tighten the air fuel ratio (A/F) sensor or heated oxygen sensors. Doing so may cause damage.**

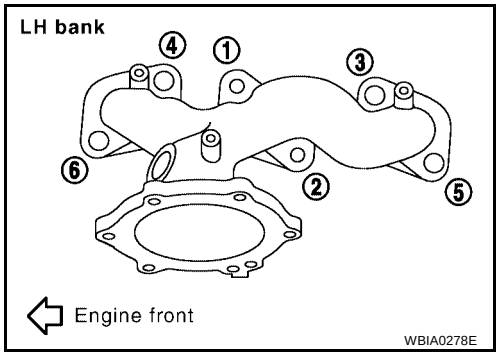

- Install the RH and LH three way catalyst support bolts in the order as shown.

Three way catalyst support bolts	**: 19 - 25 N·m (2.0 - 2.5 kg-m, 14 - 18 ft-lb)**

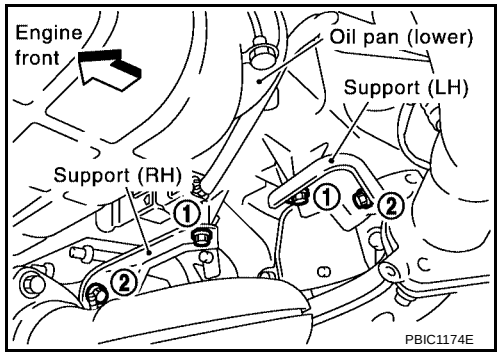

- Install the exhaust manifold heat shield bolts.

Exhaust manifold heat shield bolts	**: 5.1 - 6.5 N·m (0.52 - 0.66 kg-m, 46 - 57 in-lb)**

- Install the three way catalyst heat shield bolts.

Three way catalyst heat shield bolts	**: 6.7 - 9.8 N·m (0.69 - 0.99 kg-m, 60 - 86 in-lb)**

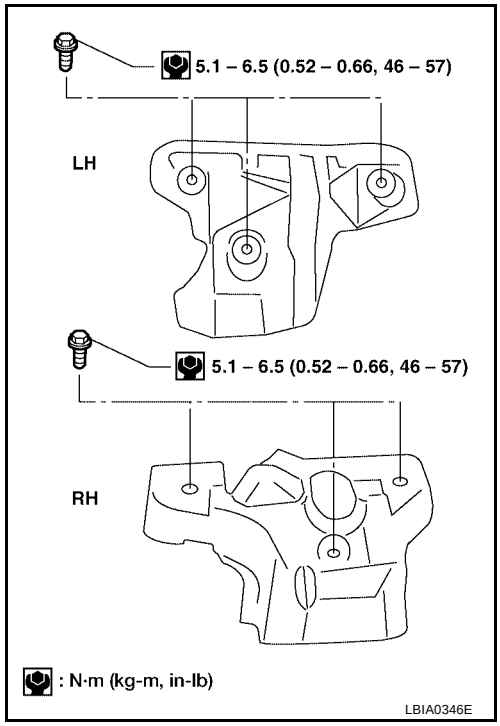

OIL PAN AND OIL STRAINER

PFP:11110

Removal and Installation

EBS00J5V

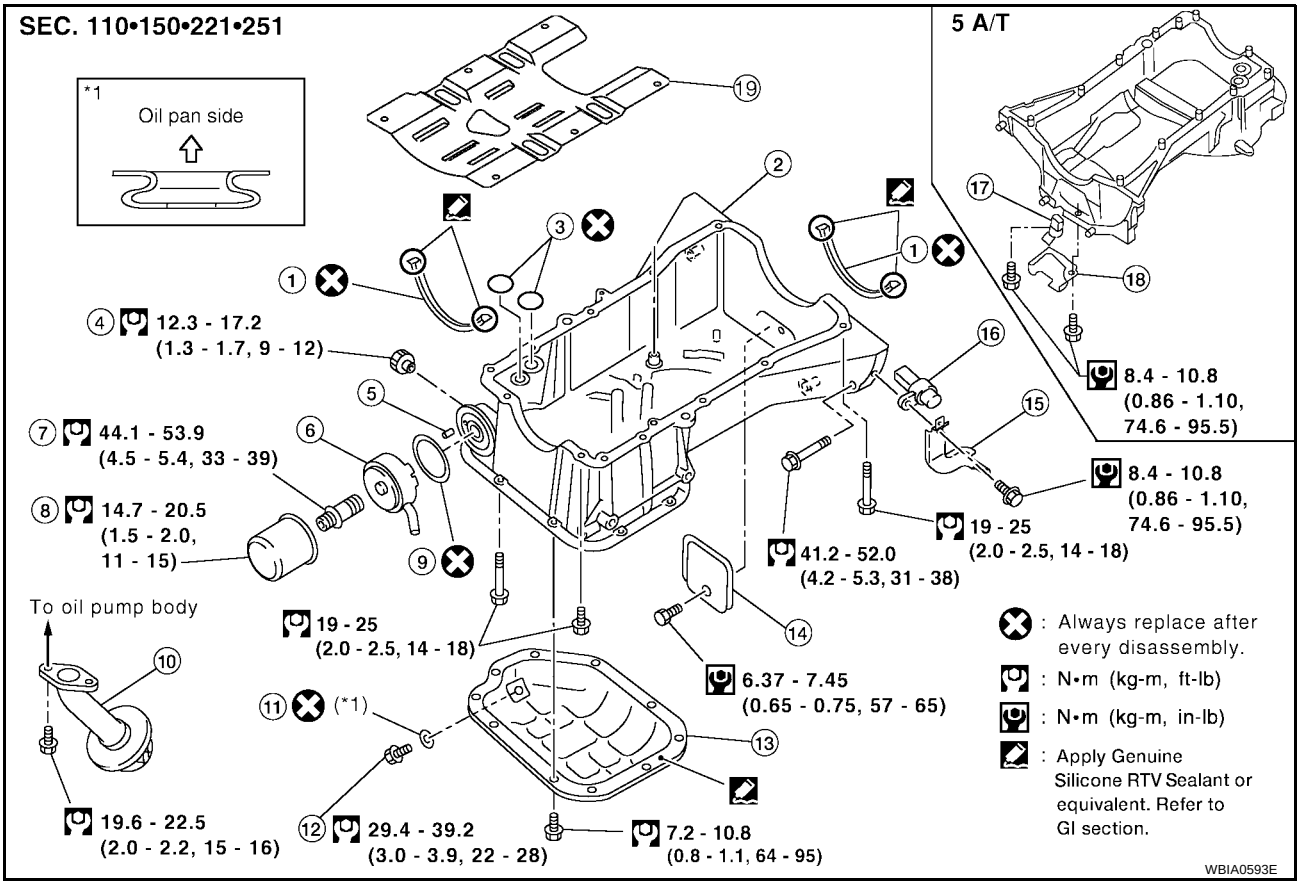

1.	Gasket	2.	Upper oil pan	3.	O-ring
4.	Oil pressure switch (non SE-R) / Oil pressure sensor (SE-R)	5.	Relief valve	6.	Oil cooler
7.	Oil cooler connection	8.	Oil filter	9.	Gasket
10.	Oil strainer	11.	Gasket	12.	Drain plug
13.	Lower oil pan	14.	Rear plate cover	15.	Heated oxygen sensor (bank 2) harness clamp
16.	Crankshaft position sensor (POS) (4 A/T & M/T)	17.	Crankshaft position sensor (POS) (5 A/T)	18.	Crankshaft position sensor (POS) (5 A/T) shield
19.	Oil pan baffle				

REMOVAL

WARNING:

- **You should not remove the oil pan until the exhaust system and cooling system have completely cooled off.**
- **When removing the front and rear engine through bolts and nuts, lift the engine up slightly for safety. For engine slingers, refer to step 37 in EM-220, "REMOVAL" .**

CAUTION:

When removing the upper oil pan from the engine, first remove the crankshaft position sensor (POS). Be careful not to damage sensor edges or signal plate teeth.

1. Remove the front RH wheel and tire using power tool. Refer to WT-5, "WHEEL AND TIRE ASSEMBLY" .
2. Disconnect the battery negative terminal.
3. Remove the oil dipstick.
4. Drain the engine coolant. Refer to CO-31, "DRAINING ENGINE COOLANT"CO-31, "DRAINING ENGINE COOLANT" .
5. Remove the engine undercover.

6. Remove the RH inner fender splash shield.
7. Remove the A/C drive belt. Refer to EM-119, "DRIVE BELTS" .
8. Remove the front exhaust tube. Refer to EX-7, "Removal and Installation" .
9. Remove coolant pipe bolts.
10. Remove the A/C compressor with piping attached, and position it out of the way securely with wire.

    CAUTION:
    Do not pull on or crimp the A/C lines and hoses.
11. Disconnect the coolant lines from the engine oil cooler and plug them to prevent coolant loss.
12. Remove the oil filter and engine oil cooler from the upper oil pan.
13. Remove the oil pressure switch/sensor, and the crankshaft position sensor (POS) from the upper oil pan.
14. Remove the front drive shafts. Refer to FAX-11, "Removal and Installation" .
15. Remove the front suspension member. Refer to FSU-15, "Removal and Installation" .
16. Disconnect the heated oxygen sensors and air flow ratio (A/F) sensors and remove the two catalytic convertors from the exhaust manifolds using power tool. Refer to EX-7, "Removal and Installation" .
17. Remove the rear plate cover from the upper oil pan.

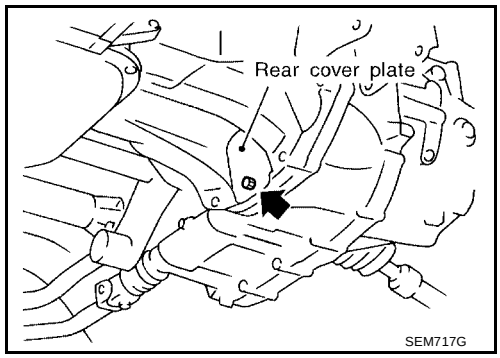

18. Loosen the lower oil pan bolts using power tool in order as shown. Remove the lower oil pan.

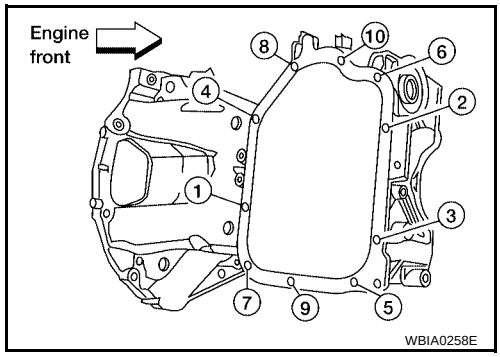

a. Insert Tool between the lower oil pan and the upper oil pan.

   Tool number : KV10111100 (J37228)

   - Be careful not to damage the mating surface.
   - Do not insert a screwdriver, this will damage the mating surfaces.

b. Slide the Tool by tapping its side with a hammer to remove the lower oil pan from the upper oil pan.

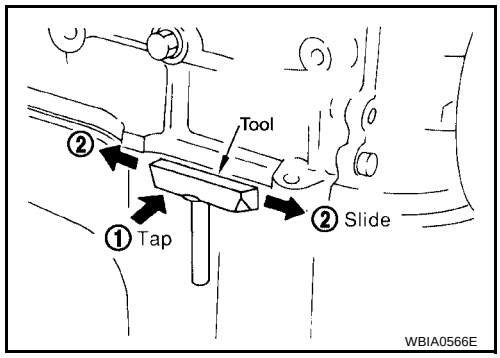

19. Remove the four upper oil pan to transaxle bolts.

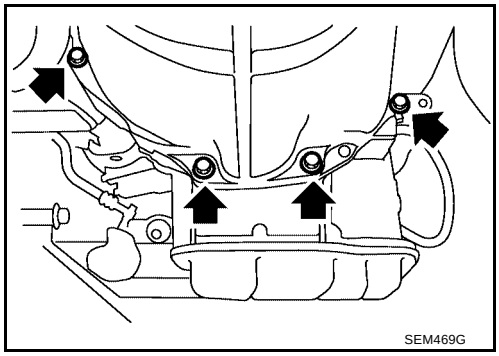

20. Remove the upper oil pan.

a. Loosen the bolts in the order as shown, using power tool.

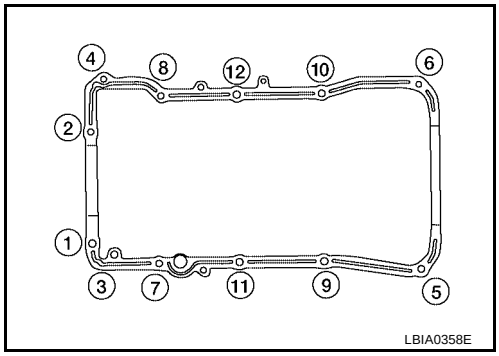

b. Insert an appropriate size tool into the notch (1) of the upper oil pan as shown.

c. Pry off the upper oil pan by moving the tool up and down (2) as shown.

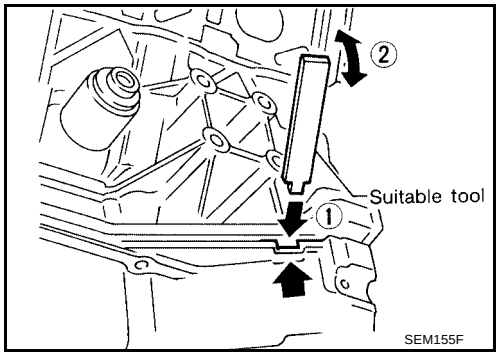

21. Remove the O-ring seals from the bottom of the cylinder block and oil pump housing, use new O-rings for installation.

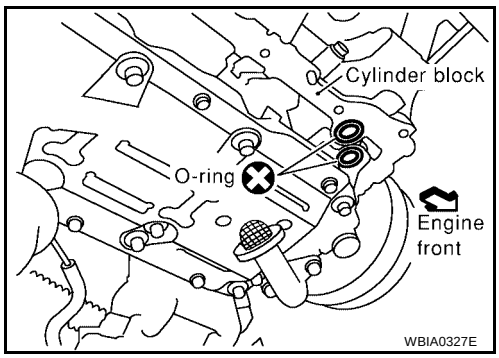

22. Remove front cover gasket and rear oil seal retainer gasket.
23. Remove the oil strainer.

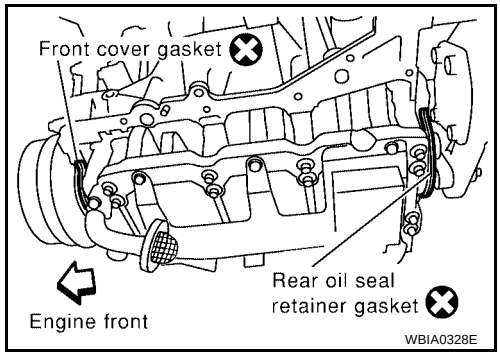

24. If re-installing the original oil pan, remove the old sealant from the mating surfaces using a scraper.
    - Also remove the old sealant from mating surface of the cylinder block.
    - Remove the old sealant from the bolt holes and threads.

    CAUTION:
    Do not scratch or damage the mating surfaces when cleaning off the old sealant.

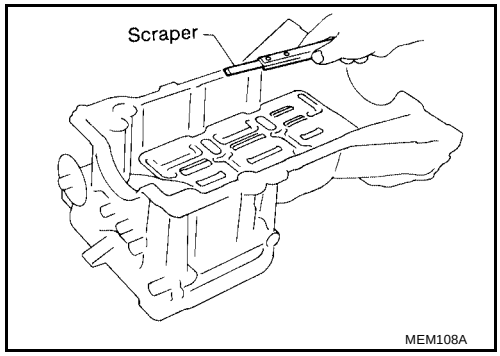

INSPECTION AFTER REMOVAL

Clean oil strainer if any object is attached.

INSTALLATION

CAUTION:
Wait at least 30 minutes before refilling the engine with oil.

1. Install oil strainer tighten bolt to specified torque. Refer to EM-138, "Removal and Installation" .
2. Apply Genuine Silicone RTV Sealant or equivalent, to the front cover gasket and the rear oil seal retainer gasket as shown. Refer to GI-45, "RECOMMENDED CHEMICAL PRODUCTS AND SEALANTS" .

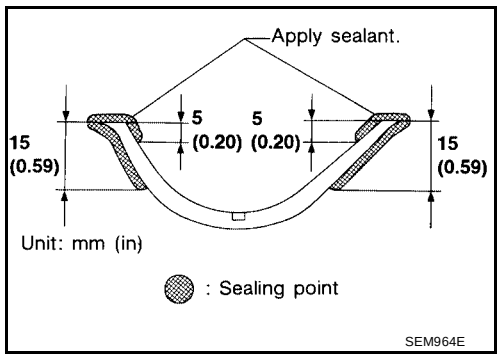

3. Install the front cover gasket and rear oil seal retainer gasket as shown.

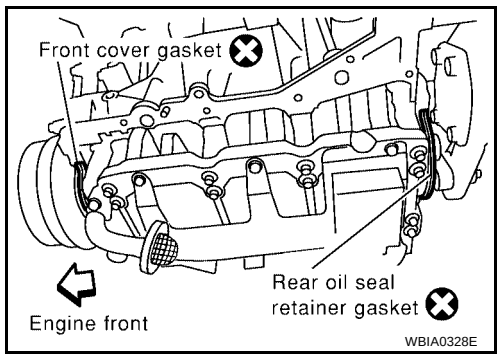

4. Apply a bead of sealant to the cylinder block mating surface of the upper oil pan to a limited portion as shown.
   - Use Genuine Silicone RTV Sealant, or equivalent. Refer to GI-45, "RECOMMENDED CHEMICAL PRODUCTS AND SEALANTS" .
   - Be sure the sealant is applied to a limited portion as shown, and the sealant is 4.0 - 5.0 mm (0.157 - 0.197 in) or 4.5 - 5.5 mm (0.177 - 0.217 in) wide.
   - Attaching should be done within 5 minutes after coating.

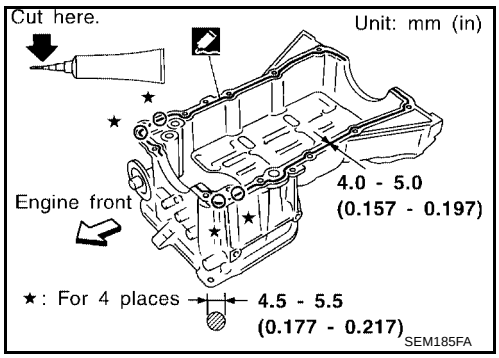

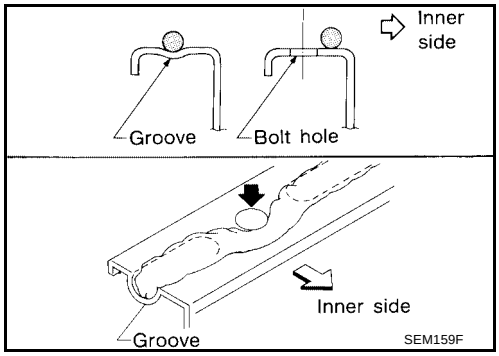

5. Install new O-rings on the cylinder block and oil pump body.

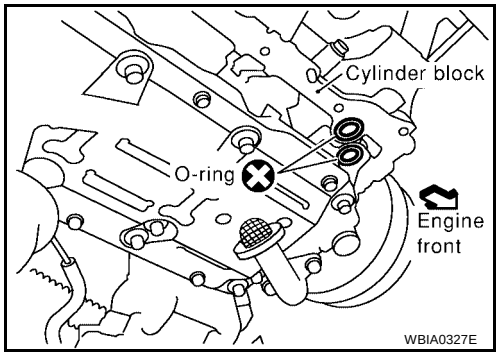

6. Install the upper oil pan.
   - Tighten upper oil pan bolts in the order as shown.

   Upper oil pan bolts : 19.0 - 25.0 N·m (2.0 - 2.5 kg-m, 14 -18 ft-lb)

   - Wait at least 30 minutes before refilling the engine with oil.

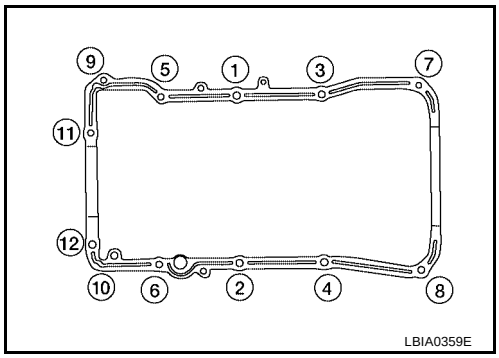

7. Install the four upper oil pan to transaxle bolts. Refer to EM-222, "INSTALLATION" .

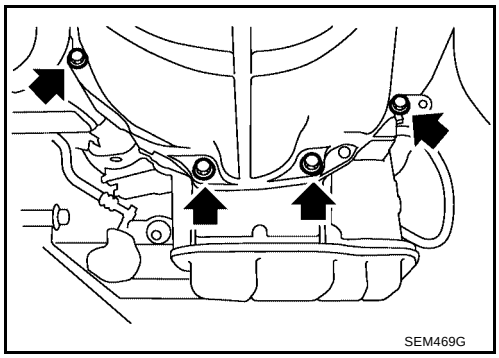

8. Apply a continuous bead of sealant to the lower oil pan.
   - Use Genuine Silicone RTV Sealant, or equivalent. Refer to GI-45, "RECOMMENDED CHEMICAL PRODUCTS AND SEALANTS" .
   - Be sure the sealant is 4.5 - 5.5 mm (0.177 - 0.217 in) wide.
   - Installation must be done within 5 minutes after applying sealant.

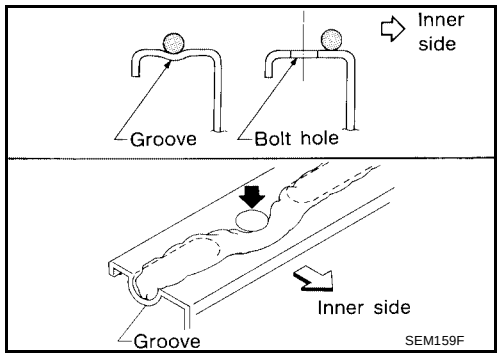

9. Install the lower oil pan. Tighten the lower oil pan bolts in order as shown.

   Lower oil pan bolts : 7.2 - 10.8 N·m (0.74 - 1.1 kg-m, 64 - 95 in-lb)

   - Wait at least 30 minutes before refilling the engine with oil.

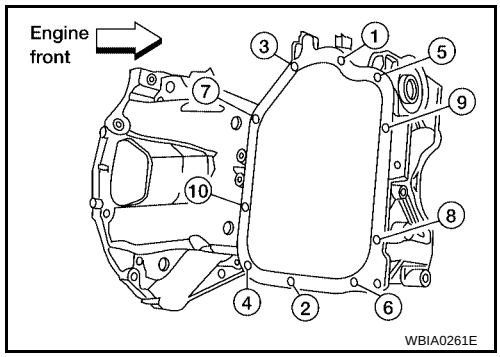

10. Install rear plate cover.

    Rear plate cover bolt : 6.37 - 7.45 N·m (0.65 - 0.75 kg-m, 57 - 65 in-lb)

11. Installation of the remaining components is in the reverse order of removal.

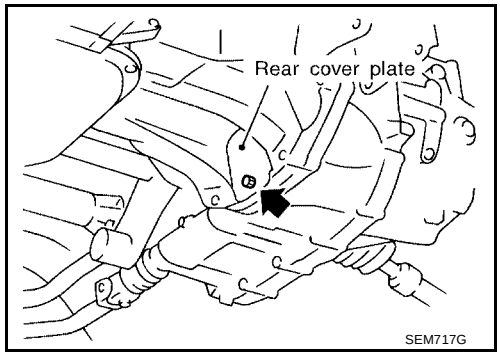

INSPECTION AFTER INSTALLATION

- Start the engine and check for leaks. Refer to MA-26, "Changing Engine Oil" .
- Inspect the engine oil level. Refer to MA-26, "Changing Engine Oil" .

IGNITION COIL

PFP:22448

Removal and Installation

EBS00J5W

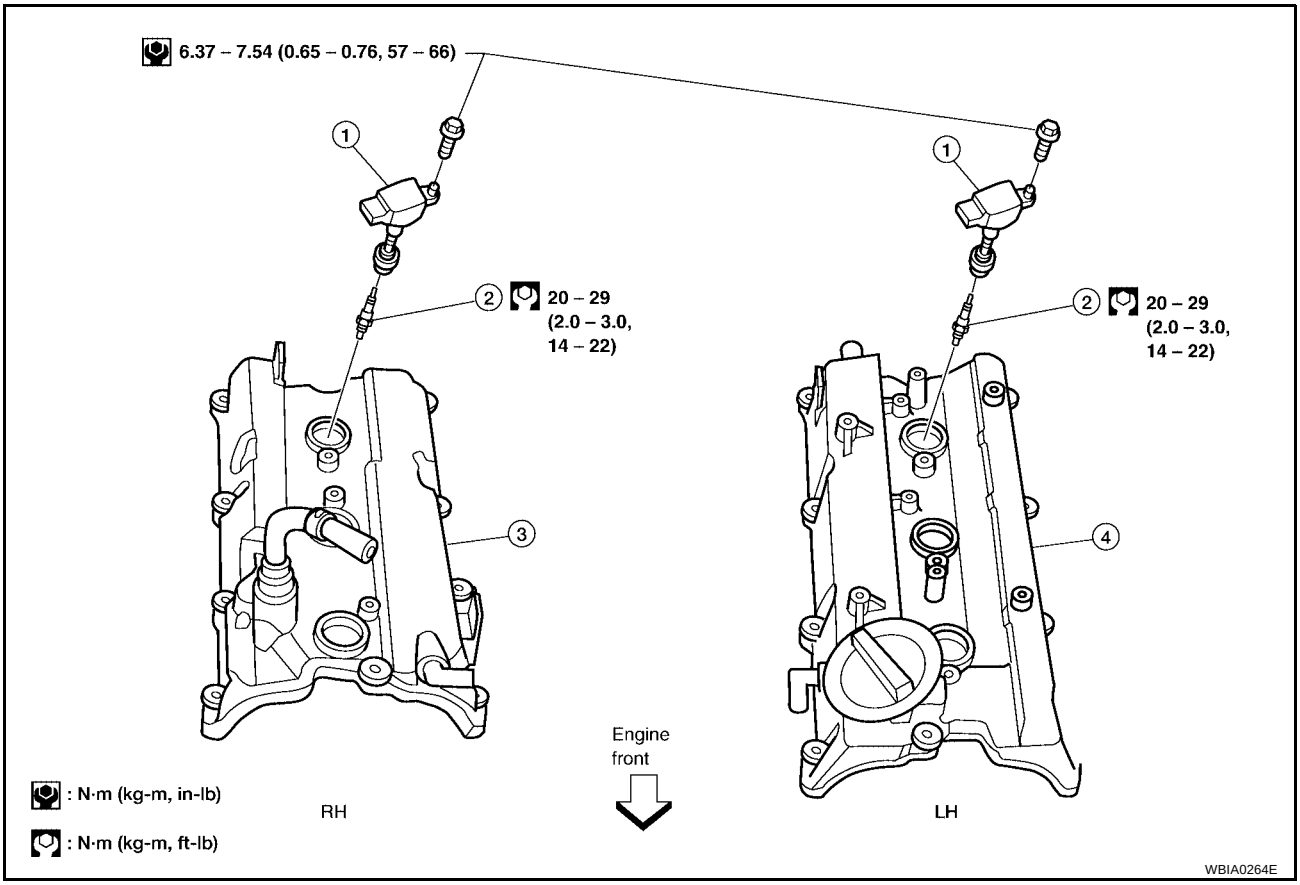

1. Ignition coil
2. Spark plug
3. Rocker cover (right bank)
4. Rocker cover (left bank)

REMOVAL

1. Remove the engine cover with power tool.
2. Drain engine coolant. Refer to CO-31, "DRAINING ENGINE COOLANT" .
3. Disconnect the mass air flow sensor electrical connector and remove the air cleaner assembly and air intake tubes. Refer to EM-120, "Removal and Installation" .
4. Remove the windshield wiper arms and motor assembly and the front cowl panel. Refer to EI-18, "Removal and Installation" .
5. Remove the intake manifold collector, gasket, and throttle body. Refer to EM-129, "Removal and Installation" .
6. Remove the six ignition coils.

   CAUTION:
   Do not shock it.

INSTALLATION

Installation is in the reverse order of removal.

SPARK PLUG (PLATINUM-TIPPED TYPE)

PFP:22401

Removal and Installation

EBS00J5X

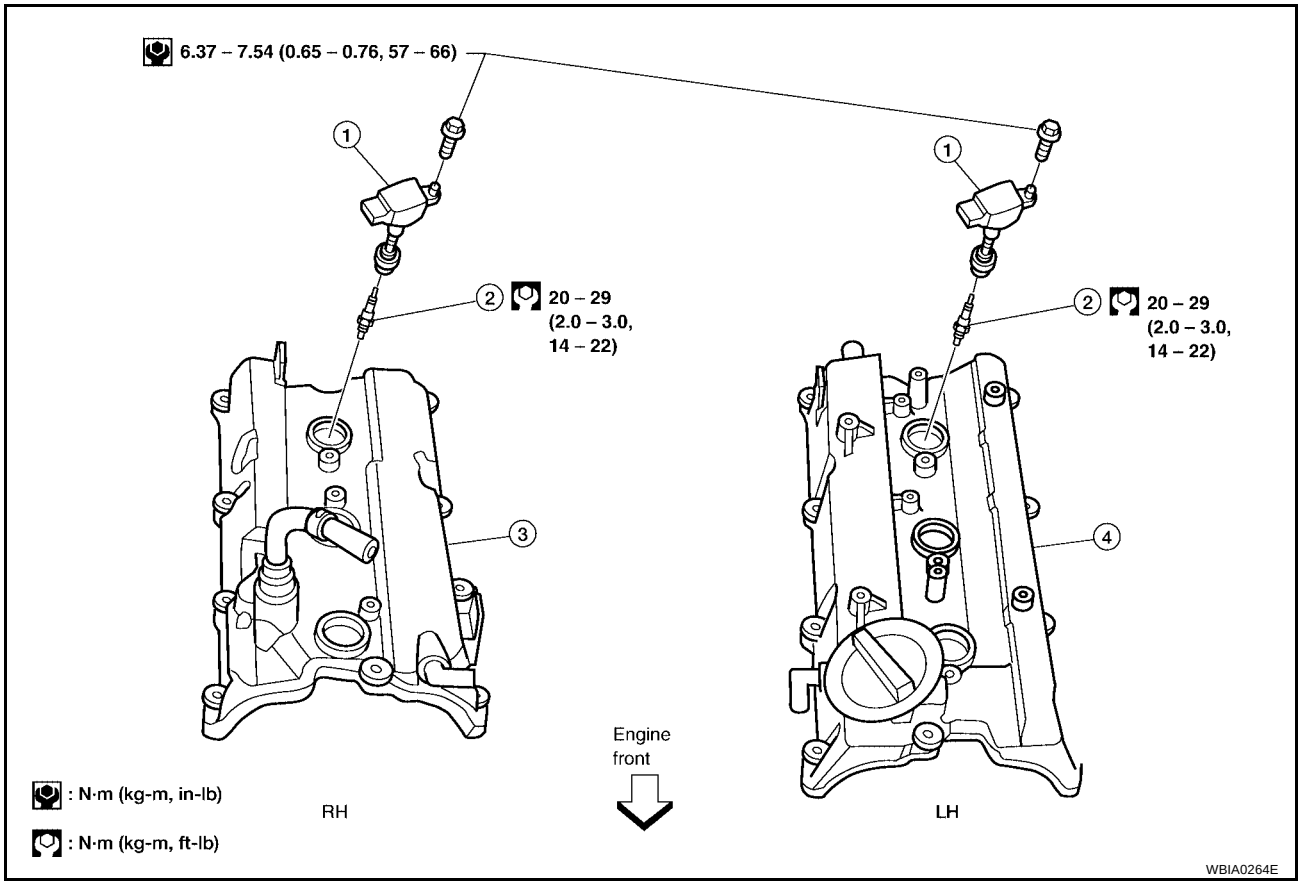

1. Ignition coil
2. Spark plug
3. Rocker cover (right bank)
4. Rocker cover (left bank)

REMOVAL

1. Remove the engine cover, with power tool.
2. Drain the engine coolant. Refer to CO-31, "DRAINING ENGINE COOLANT" .
3. Disconnect the mass air flow sensor electrical connector and remove the air cleaner assembly and air intake tubes. Refer to EM-120, "Removal and Installation" .
4. Remove the windshield wiper arms and motor assembly and the front cowl panel. Refer to EI-18, "Removal and Installation" .
5. Remove the intake manifold collector, gasket, and throttle body. Refer to EM-129, "Removal and Installation" .
6. Remove the six ignition coils.
7. Remove the six spark plugs with a suitable tool.
   - If replacing the spark plugs use the correct spark plug for maximum performance. Refer to MA-28, "Changing Spark Plugs (Platinum - Tipped Type)" .

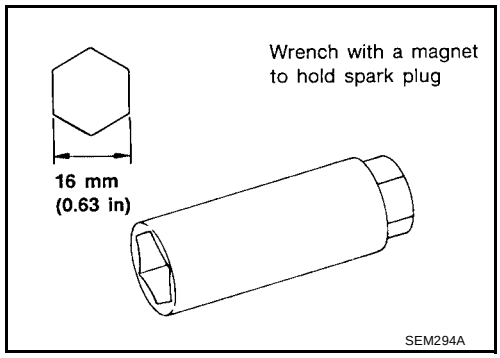

INSPECTION AFTER REMOVAL

- Do not use a wire brush for cleaning the spark plug tip.

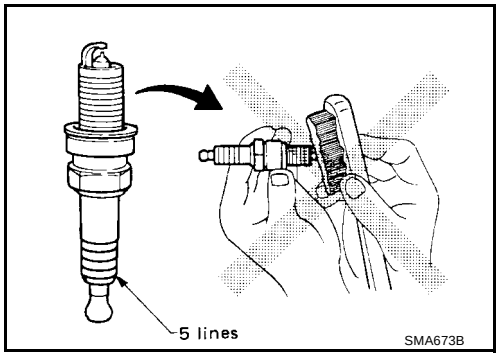

- If the spark plug tip is covered with carbon, a spark plug cleaner may be used.

Cleaner air pressure : Less than 588 kPa (6 kg/cm^2 , 85 psi)

Cleaning time : Less than 20 seconds

- Checking and adjusting the spark plug gap is not required between change intervals. If the gap is out of specification, replace the spark plug.

Gap (nominal) : 1.1 mm (0.043 in)

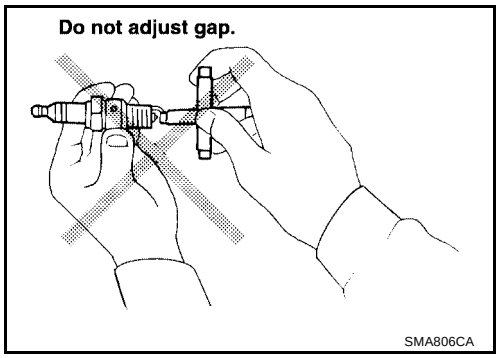

INSTALLATION

Installation is in the reverse order of removal.

- Use the standard type spark plugs for normal driving conditions.
- The hot type spark plug is suitable when fouling occurs with the standard type spark plug under conditions such as:
  - frequent engine starts
  - low ambient temperatures
- The cold type spark plug is suitable when spark knock occurs with the standard type spark plug under conditions such as:
  - extended highway driving
  - frequent high engine revolution

Spark Plug Types

Temperature range	NGK
Standard type	PLFR5A-11
Hot type	PLFR4A-11
Cold type	PLFR6A-11
Gap (nominal)	1.1 mm (0.043 in)

FUEL INJECTOR AND FUEL TUBE

PFP:16600

Removal and Installation

EBS00J5Y

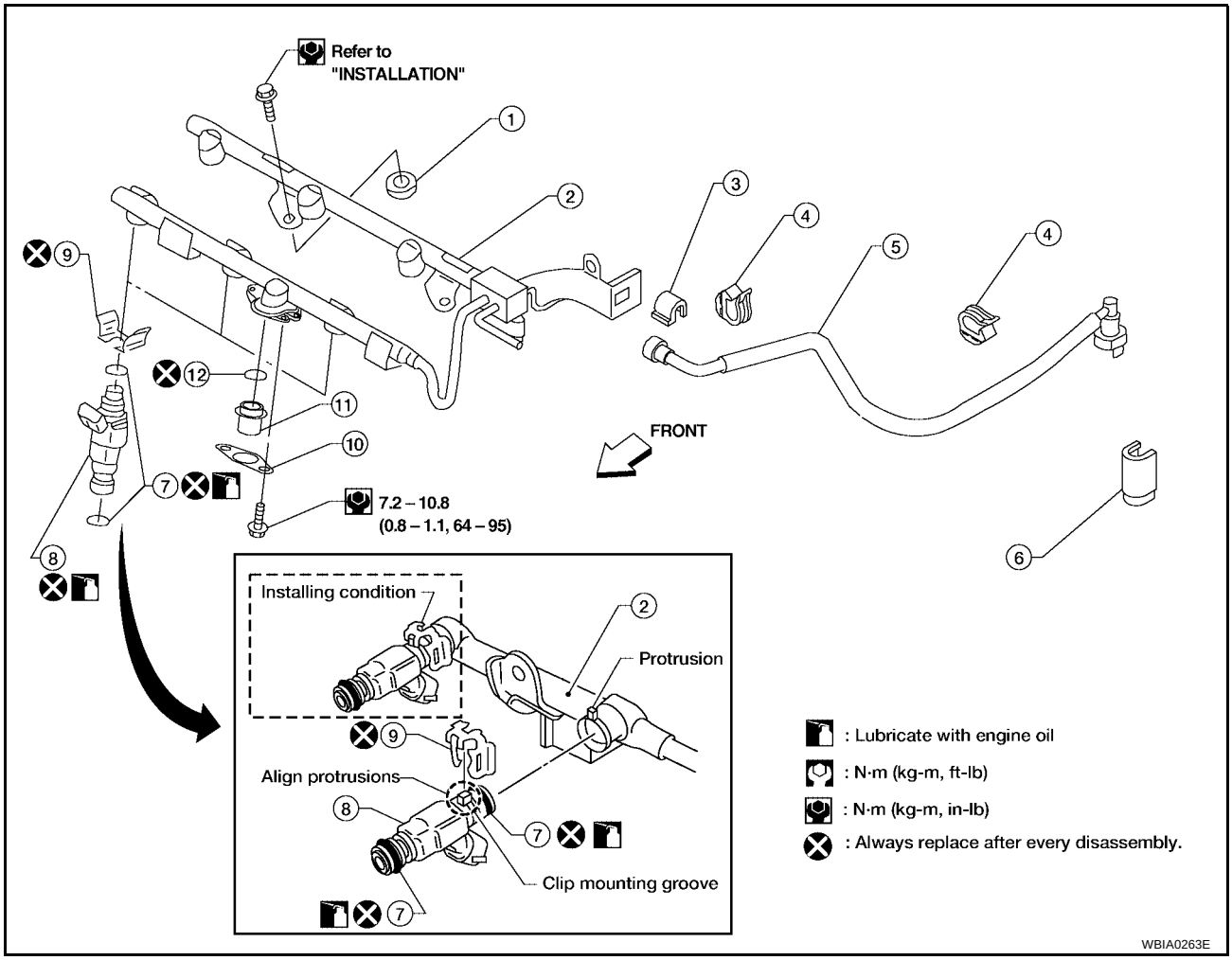

1. O-ring	2. Fuel injector	3. Fuel tube assembly
4. Insulator	5. Fuel damper	6. Fuel damper

CAUTION:

- **Apply new engine oil when installing the parts as specified to do so.**
- **Do not remove or disassemble parts unless instructed as shown.**

REMOVAL

1. Remove the engine cover using power tool.
2. Release the fuel pressure.
   Refer to EC-686, "FUEL PRESSURE RELEASE" .
3. Remove air cleaner case lid and mass air flow sensor, and air intake tube as an assembly.
   Refer to EM-120, "Removal and Installation" .
4. Partially drain the coolant when the engine is cool. Refer to CO-31, "DRAINING ENGINE COOLANT" .

   WARNING:
   To avoid the danger of being scalded, never drain the coolant when the engine is hot.
5. Disconnect fuel tube quick connector at vehicle piping side.
   Refer to step 5 of EM-130, "REMOVAL" .
6. Disconnect the power brake booster vacuum hose, the coolant hoses from the electric throttle control actuator, the swirl control vacuum lines, the fuel injectors electrical connectors, and the PCV hose.

   CAUTION:
   - **Cover any engine openings to avoid the entry of any foreign material.**
7. Disconnect the electric throttle control actuator electrical connector and coolant hoses.

8. Remove the cowl top grille and the windshield wiper assembly.
   Refer to EI-18, "Removal and Installation" .
9. Disconnect the power steering hose bracket.
10. Remove the vacuum tank from the back of the intake manifold collector.
11. Remove the intake manifold collector pipe and electric throttle control actuator, by loosening the four bolts in a diagonal pattern.

    CAUTION:
    Handle carefully to avoid any shock to the electric throttle control actuator.
12. Loosen the bolts in the order as shown, and remove the intake manifold collector using power tool.
13. Remove the fuel rail with the fuel injectors attached, from the intake manifold. Remove the fuel injector O-rings and use new O-rings for installation.

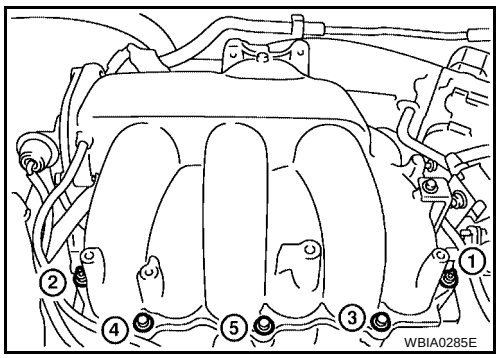

INSTALLATION

1. Install the fuel rails with fuel injectors attached.

   NOTE:
   - Carefully install new O-rings, including the one used with the fuel damper.
   - Lubricate O-rings by lightly coating with new engine oil.
   - Be careful not to damage the O-rings and surfaces for O-ring sealing surfaces. Do not expand or twist O-rings.
   - Discard old clips; replace with new ones.
   - Make sure that protrusions of fuel injectors are aligned with cutouts of clips after installation.
   - Position clips in grooves on the fuel injectors.
   - Align the protrusions of the fuel tube assembly with those of the fuel injectors.
   - After properly inserting the fuel injectors onto the fuel tube assembly, check that the fuel tube protrusions are engaged with those of fuel injectors, and the flanges of the fuel tube assembly are fully engaged with the clips.

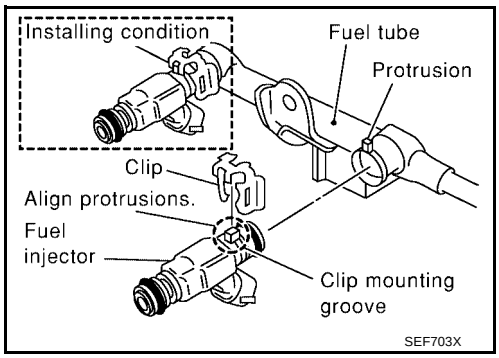

2. Tighten fuel tube assembly bolts as shown, in two steps:

   1st step **: 9.3 - 10.8 N·m (0.95 - 1.1 kg-m, 6.2 - 7.9 ft-lb)**

   2nd step **: 20.6 - 26.5 N·m (2.1 - 2.7 kg-m, 16 - 19 ft-lb)**

   CAUTION:
   - **After properly connecting fuel tube assembly to injector and fuel hose, check connection for fuel leakage.**

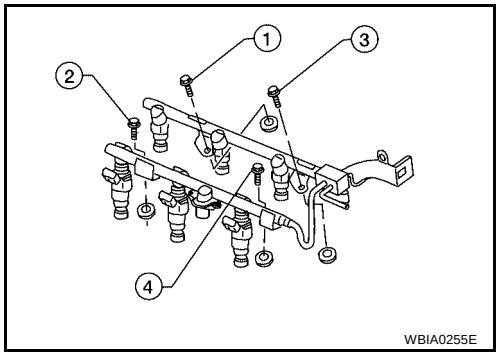

3. Install the intake manifold collector bolts in the numerical order as shown.

   Intake manifold collector bolts : **18 - 21 N·m (1.8 - 2.2 kg-m, 13 - 15 ft-lb)**

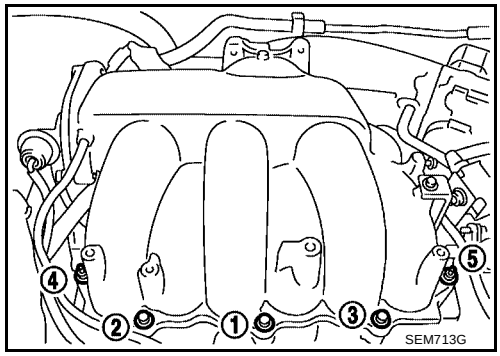

4. Tighten the bolts of the intake manifold collector pipe and electric throttle control actuator assembly diagonally to specification.

   Intake manifold collector pipe bolts : **18 - 21 N·m (1.8 - 2.2 kg-m, 13 - 15 ft-lb)**

5. After installation, it is necessary to re-calibrate the electric throttle control actuator.
   - Perform "Throttle Control Closed Position Learning" when the harness connector of the electric throttle control actuator is disconnected. Refer to EC-684, "Throttle Valve Closed Position Learning" .
   - Perform "Idle Air Volume Learning" when the electric throttle control actuator is replaced. Refer to EC-684, "Idle Air Volume Learning" .
6. Attach the quick connector. Refer to EM-131, "INSTALLATION" .
7. Installation of remaining components is in the reverse of removal.

INSPECTION AFTER INSTALLATION

Make sure there is no fuel leakage at connections as follows:

1. Apply fuel pressure to fuel lines by turning ignition switch ON (with engine stopped). Then check for fuel leaks at connections.
2. Start the engine and rev it up and check for fuel leaks at connections.

   NOTE:
   Use mirrors for checking on connections out of the direct line of sight.

   CAUTION:
   Do not touch engine immediately after stopping as engine is extremely hot.
   - Perform procedures for “Throttle Valve Closed Position Learning” after finishing repairs. Refer to EC-684, "Throttle Valve Closed Position Learning" .
   - If electric throttle control actuator is replaced, perform procedures for “Idle Air Volume Learning” after finishing repairs. Refer to EC-684, "Idle Air Volume Learning" .

ROCKER COVER

PFP:13264

Removal and Installation

EBS00J5Z

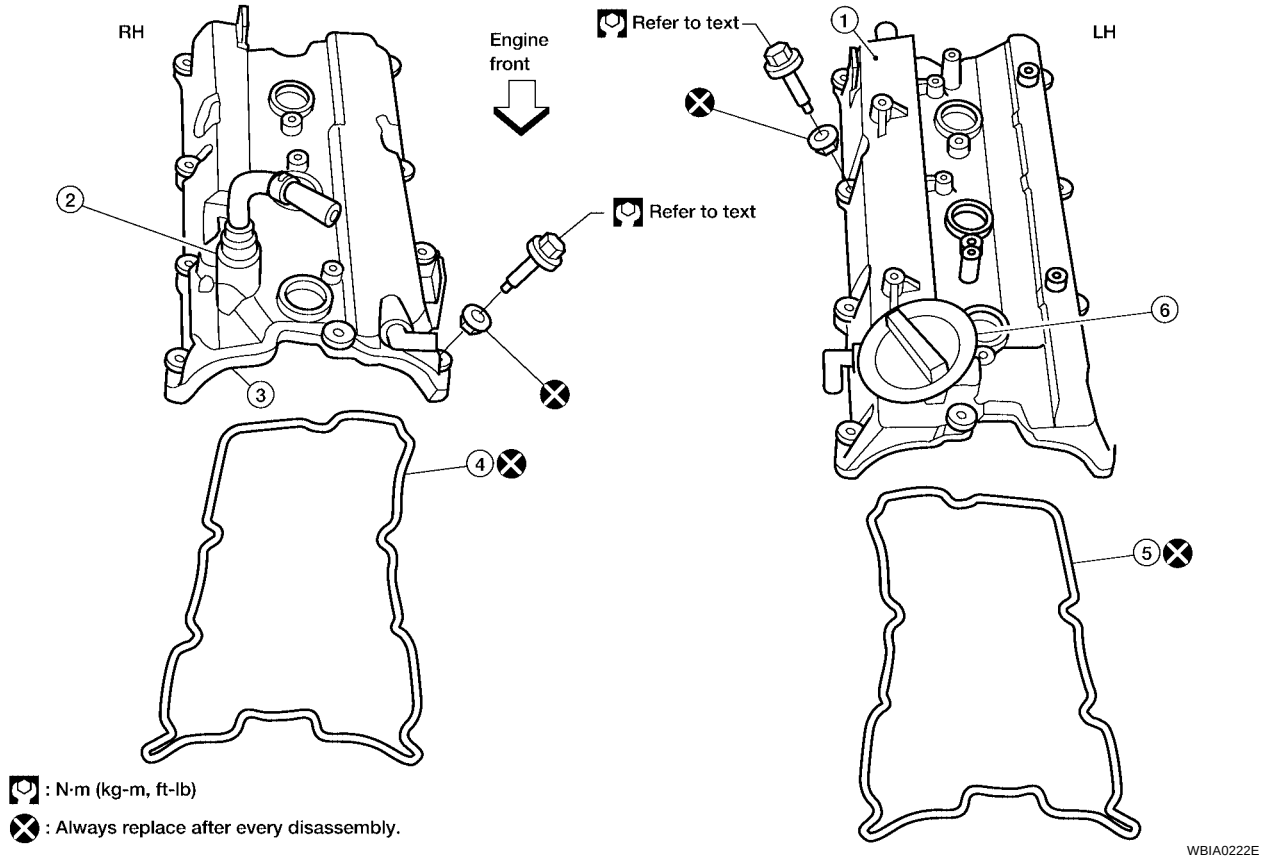

1. Rocker cover (left bank)
2. PCV valve
3. Rocker cover (right bank)
4. Rocker cover gasket (right bank)
5. Rocker cover (left bank)
6. Oil filler cap

REMOVAL

1. Remove the engine cover, using power tool.
2. Disconnect the mass air flow sensor electrical connector and remove the air cleaner assembly and air intake tubes. Refer to EM-120, "Removal and Installation" .
3. Remove the windshield wiper arms and motor assembly and the front cowl panel. Refer to WW-27, "Removal and Installation" .
4. Remove the intake manifold collector using power tool. Remove gasket and the electric throttle control actuator. Refer to EM-129, "Removal and Installation" .
5. Remove the six ignition coils. Refer to EM-144, "Removal and Installation" .
6. Remove the two intake valve timing control solenoid valves and gaskets. Refer to EC-795, "INTAKE VALVE TIMING CONTROL SOLENOID VALVE" .

7. Remove RH and LH rocker covers from cylinder head.
   - Follow the loosening sequence for each side rocker cover bolts as shown.

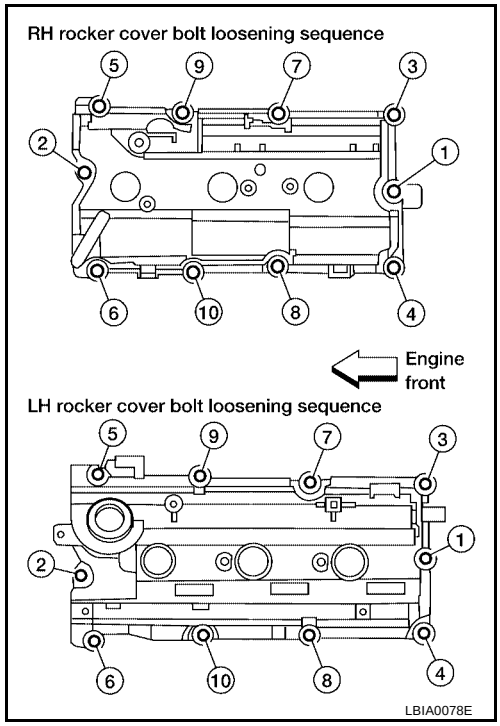

INSTALLATION

1. Installation is in the reverse order of removal.
   - Apply sealant to the areas on the front corners. Refer to EM-163, "POSITION FOR APPLYING LIQUID GASKET" .
   - Use Genuine Silicone RTV Sealant or equivalent. Refer to GI-45, "RECOMMENDED CHEMICAL PRODUCTS AND SEALANTS" .
   - **Tighten the rocker cover bolts in two stages and in the numerical order as shown.**

Rocker cover bolts	
Stage 1	**: 0.96 - 2.96 N·m (0.10 - 0.30 kg-m, 9 - 26 in-lb)**
Stage 2	**: 7.33 - 9.33 N·m (0.75 - 0.95 kg-m, 65 - 82 in-lb)**

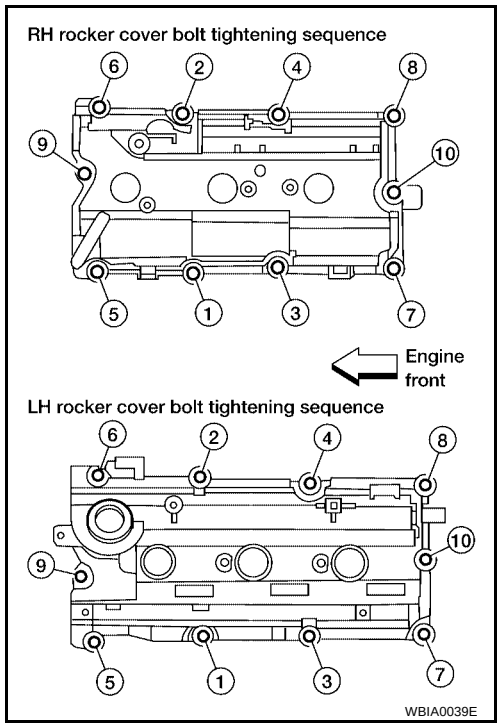

FRONT TIMING CHAIN CASE

PFP:13599

Removal and Installation

EBS00J60

SEC. 120•130•150•210•275

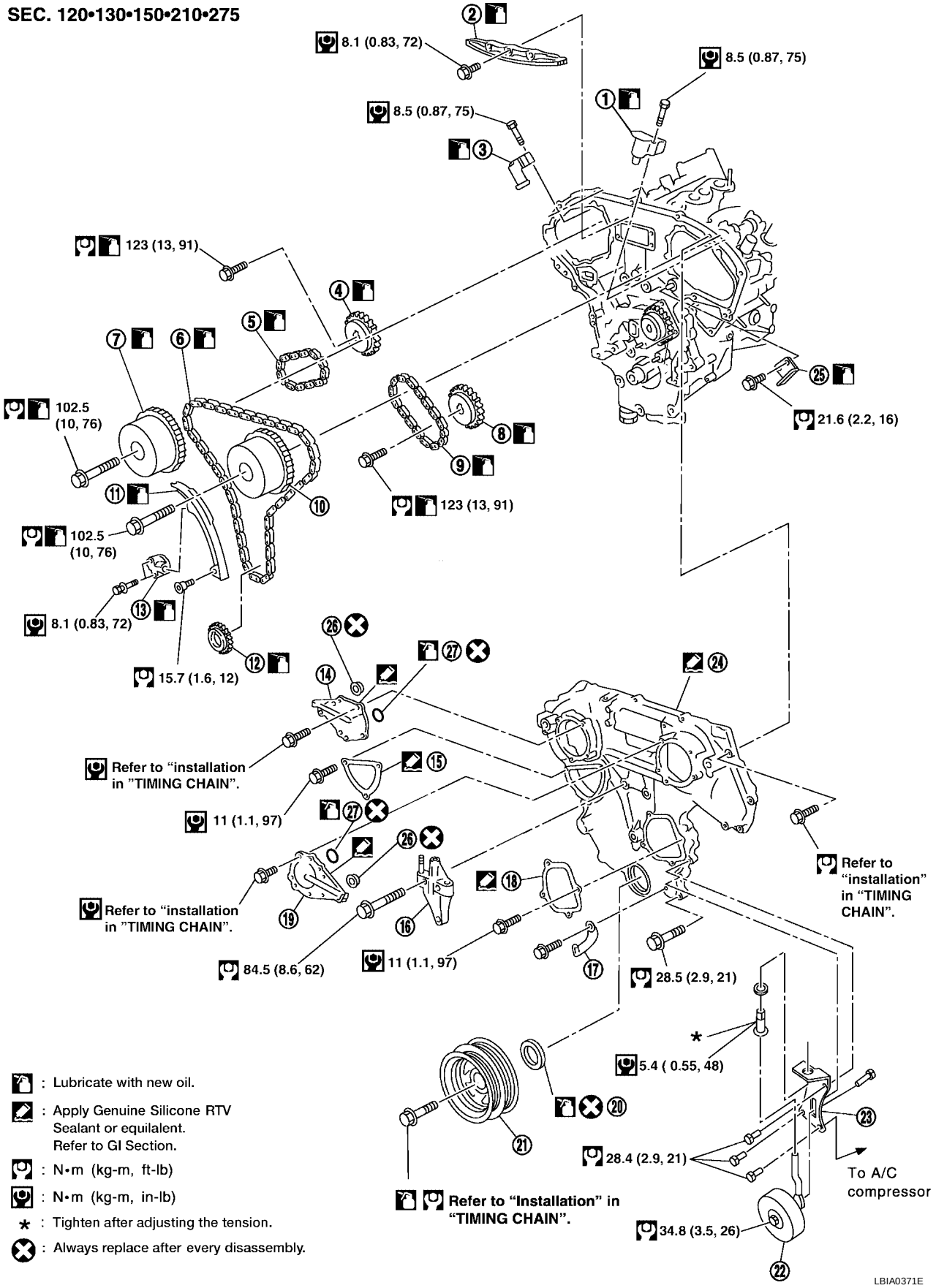

1. Timing chain tensioner	2. Internal chain guide	3. Timing chain tensioner
4. Camshaft sprocket (EXH)	5. Timing chain (secondary)	6. Timing chain (primary)
7. Camshaft sprocket (INT)	8. Camshaft sprocket (EXH)	9. Timing chain (secondary)
10. Camshaft sprocket (INT)	11. Slack guide	12. Crankshaft sprocket
13. Timing chain tensioner	14. IVT control valve cover - right	15. Chain tensioner cover
16. RH engine mounting bracket	17. Water hose clamp	18. Water pump cover
19. IVT control valve cover - left	20. Front oil seal	21. Crankshaft pulley
22. Idler pulley	23. Idler pulley bracket	24. Front timing chain case
25. Timing tension guide	26. Collared O-ring	27. Seal ring

NOTE:

- This section describes procedures for removal/installation procedure of the front timing chain case and timing chain related parts without removing the oil pan (upper) from the vehicle.
- When oil pan (upper) needs to be removed or installed, or when rear timing chain case is removed or installed, remove oil pans (upper and lower) first. Then remove front timing chain case, timing chain related parts, and rear timing chain case in this order, and install in reverse order of removal. Refer to EM-161, "TIMING CHAIN" .
- Refer to EM-161, "TIMING CHAIN" for component parts location.

REMOVAL

1. Remove lower and upper oil pans. Refer to EM-138, "Removal and Installation" .
2. Remove engine cover using power tool.
3. Remove the upper air cleaner case, mass air flow sensor and air cleaner to electric throttle control actuator tube. Refer to EM-120, "REMOVAL" .
4. Remove the engine coolant reservoir. Refer to CO-34, "REMOVAL" .

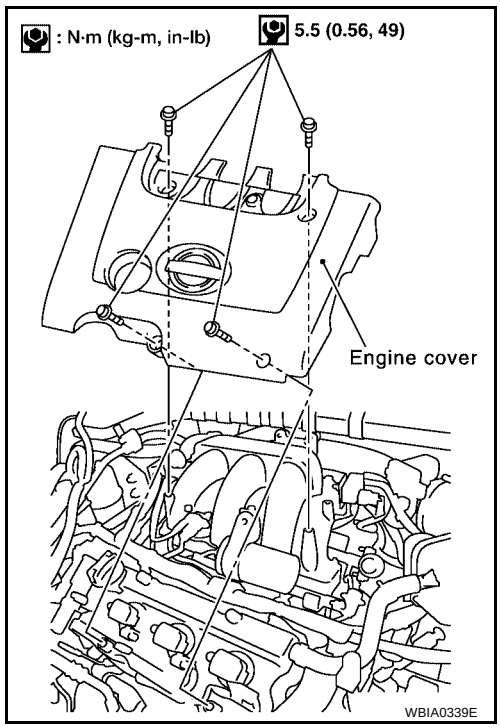

5. Remove the cowl top and cowl top extension. Refer to EI-18, "Removal and Installation" .
6. Remove the IPDM E/R and position aside. Remove the bracket. Refer to PG-28, "Removal and Installation of IPDM E/R" .
7. Remove the front RH wheel and tire using power tool. Refer to WT-5, "WHEEL AND TIRE ASSEMBLY" .
8. Remove the engine undercover.
9. Remove the RH inner fender splash shield.
10. Remove the drive belts and idler pulley. Refer to EM-119, "DRIVE BELTS" .
11. Recover the A/C system R134a and remove the A/C compressor. Refer to ATC-102, "Evacuating System and Charging Refrigerant" .
12. Remove engine oil cooler pipe bolts.

13. Remove the power steering oil pump and reservoir tank with lines attached and position them aside. Refer to PS-22, "Removal and Installation"
14. Remove the generator. Refer to SC-28, "Removal and Installation" .
15. Disconnect the engine harness and position aside.
16. Remove the A/C low-pressure flexible hose. Refer to ATC-111, "Removal and Installation for Low-pressure Flexible Hose" or MTC-97, "Removal and Installation for Low-pressure Flexible Hose" (MTC).
17. Support the engine and remove the RH engine mounting insulator, mount and bracket. Refer to EM-219, "Removal and Installation" .
18. Remove the chain tensioner cover and water pump cover, using Tool.

Tool number : KV10111100 (J-37228)

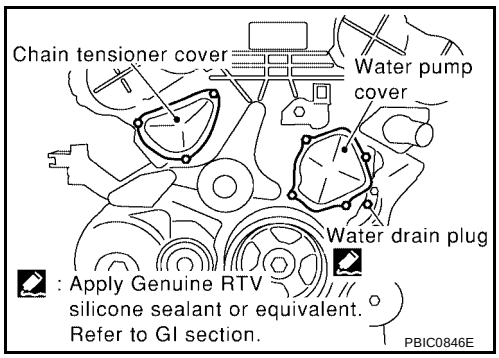

19. Remove the IVT control covers, right and left. Loosen the IVT control cover bolts in the order as shown.

NOTE:
The shaft in the cover is inserted into the center hole of the intake camshaft sprocket. Remove the cover by pulling straight out until the cover disengages from the camshaft sprocket.

20. Remove the starter motor. Refer to SC-17, "Removal and Installation" .
21. Remove the intake manifold collector. Refer to EM-122, "Removal and Installation" .

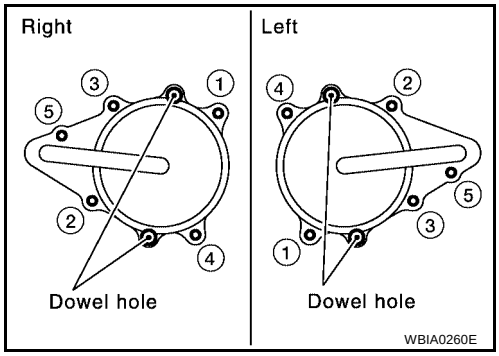

22. Remove the six ignition coils.

NOTE:
Note locations for installation.

23. Remove the six spark plugs.

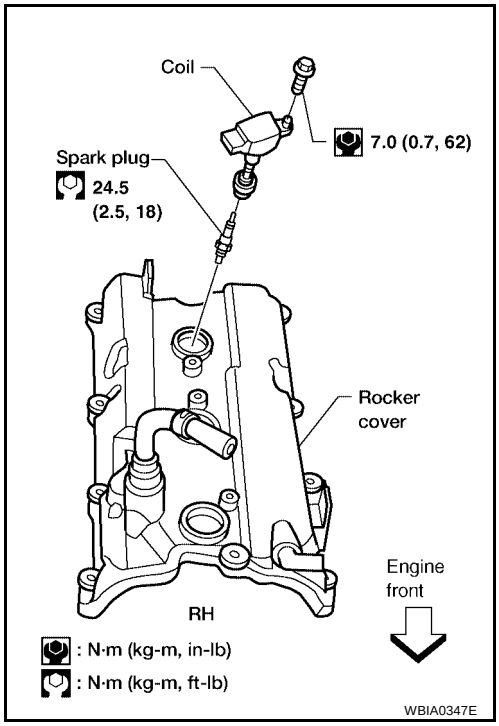

24. If necessary, remove the rocker covers. Loosen the rocker covers bolts in the order as shown.

NOTE:
Necessary only when removing secondary timing chains.

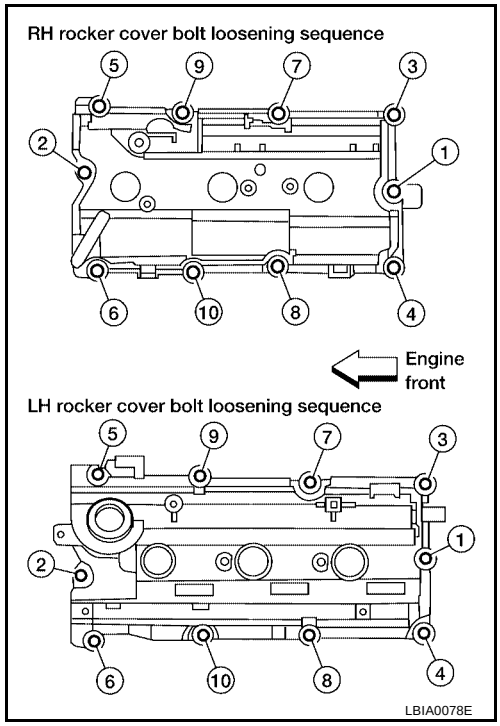

25. Remove the IVT control solenoid valves.
- Discard the gaskets and use new gaskets for installation.

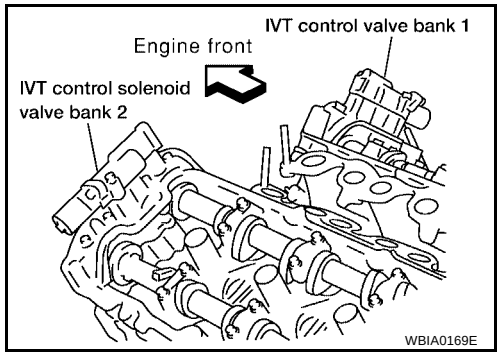

26. Obtain compression TDC of No. 1 cylinder as follows:

a. Rotate crankshaft pulley clockwise to align timing mark (grooved line without color) with timing indicator.

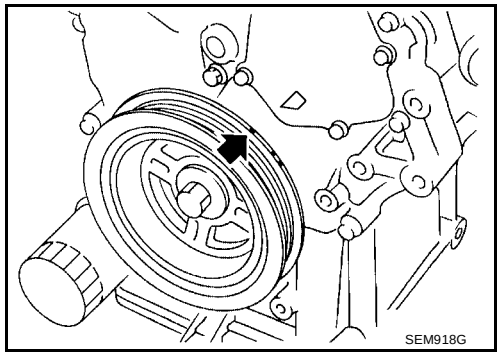

b. Check that intake and exhaust camshaft lobes on No. 1 cylinder (right bank of engine) are located as shown.
- If not, turn the crankshaft one revolution (360°) and align as shown.

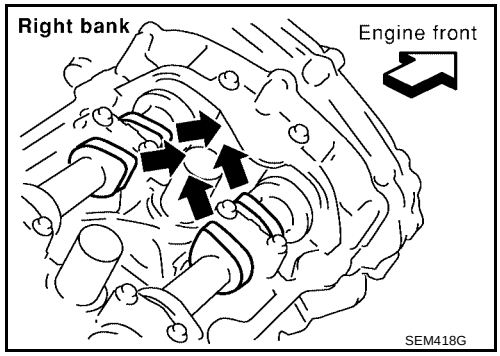

27. Lock the drive plate (A/T), flywheel (M/T) attached to the starter bolt hole using Tool.

Tool number : KV10117700 (J-44716)

CAUTION:
Do not damage the ring gear teeth, or the signal plate teeth behind the ring gear, when setting the Tool.

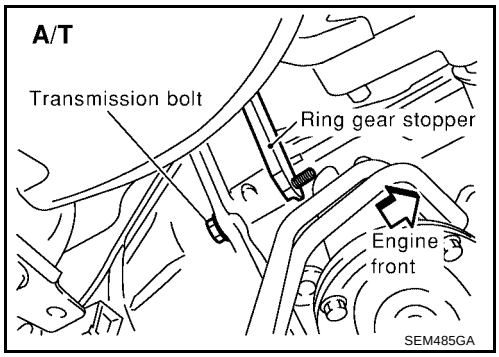

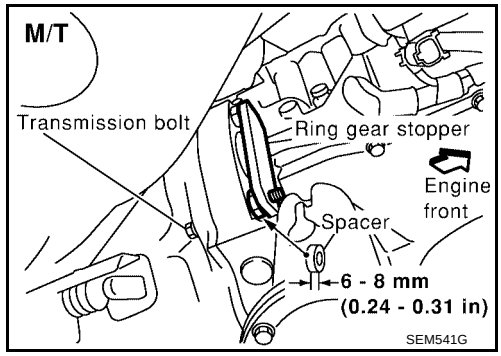

28. Remove the crankshaft pulley as follows:

a. Loosen crankshaft pulley bolt using Tool and locate bolt seating surface at 10 mm (0.39 in) from its original position.

Tool number : KV10109300

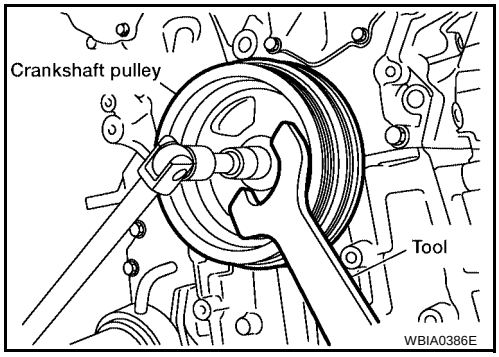

b. Position a pulley puller at recess hole of crankshaft pulley to remove crankshaft pulley.

CAUTION:
Do not use a puller claw on crankshaft pulley periphery.

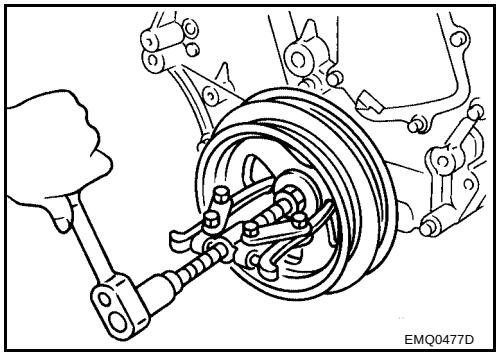

29. Remove the front timing chain case.

a. Loosen the front timing chain case bolts in the order as shown.

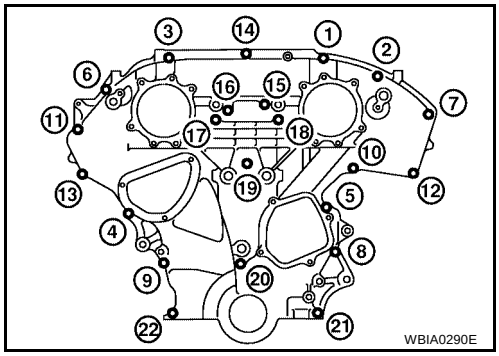

b. Insert the appropriate size tool into the notch (1) at the top of the front timing chain case as shown.

c. Pry off the case by moving the suitable tool (2) as shown.
   - Cut liquid gasket for removal using Tool.

   CAUTION:
   - **Do not use a screwdriver or similar tool.**
   - **After removal, handle carefully so it does not bend, or warp under a load.**

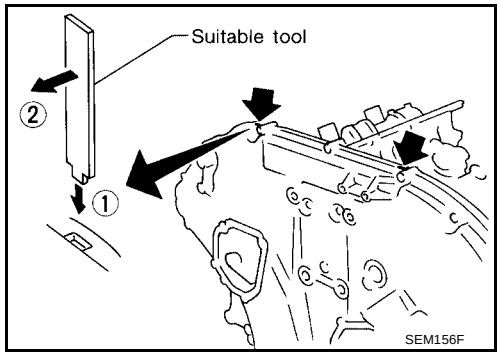

30. Remove the water pump cover and chain tensioner cover from the front timing chain case using Tool.

    Tool number : KV10111100 (J-37228)

    - Be careful not to damage the mating surface.
    - Do not insert a screwdriver, this will damage the mating surfaces.

31. Remove the front oil seal from the front timing chain case using a suitable tool.

    CAUTION:
    Do not damage the front cover.

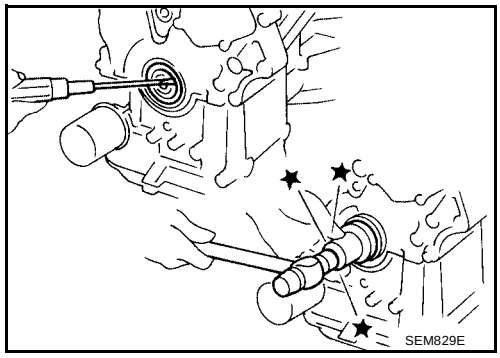

32. Use a scraper to remove all of the old Silicone RTV Sealant from the front timing chain case and opposite mating surfaces.

    CAUTION:
    Do not damage the mating surfaces.

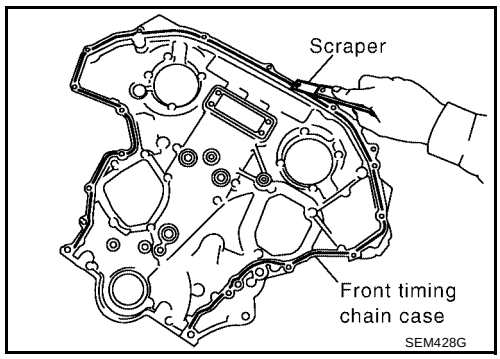

INSTALLATION

1. Install dowel pins (right and left) into front timing chain case up to a point close to taper in order to shorten protrusion length.

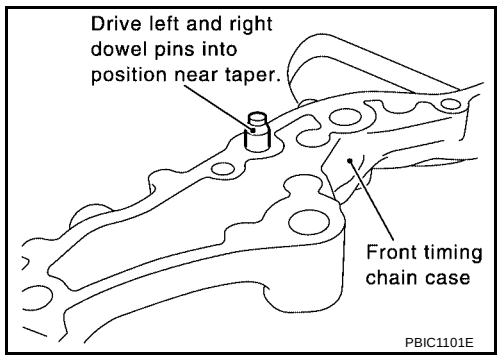

2. Install the new front oil seal on the front timing chain case. Apply new engine oil to the oil seal edges.

   NOTE:
   Install it so that each seal lip is oriented as shown.

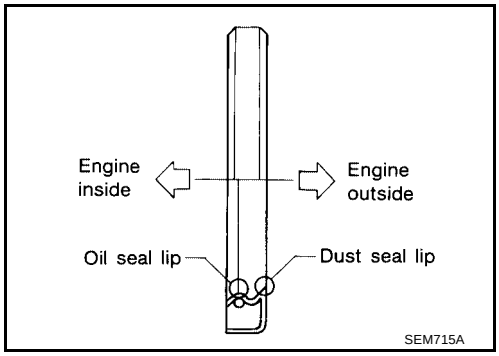

a. Install the new front oil seal so that it becomes flush with the face with front timing chain case using suitable drift.

   CAUTION:
   Press fit straight and avoid causing burrs or tilting the oil seal.

   NOTE:
   Make sure the garter spring is in position and seal lip is not inverted.

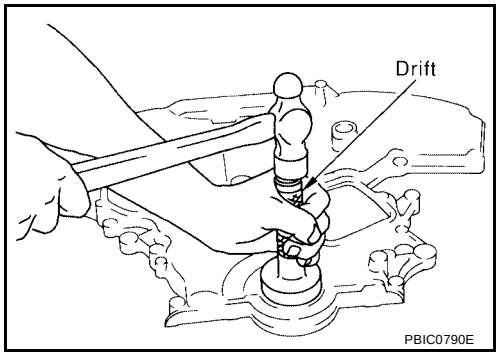

3. Apply Silicone RTV Sealant to front timing chain case as shown.
   - Use Genuine Silicone RTV Sealant, or equivalent. Refer to MA-12, "RECOMMENDED FLUIDS AND LUBRICANTS" .
   - Before installation, wipe off the protruding sealant.

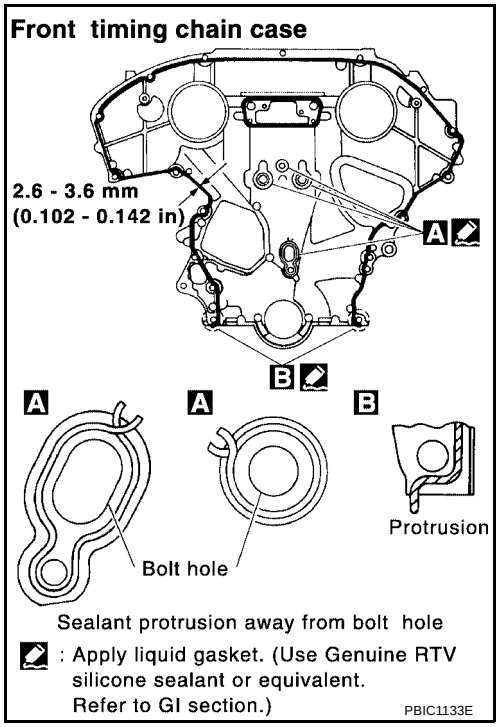

4. Install dowel pin on the rear timing chain case into dowel pin hole in front timing chain case.

5. Loosely install the front timing chain case bolts.

Bolt position	Bolt diameter
1, 2	: 8 mm (0.31 in)
3 – 22	: 6 mm (0.24 in)

6. Tighten the front timing chain case bolts in the order as shown.
   - Retighten the front timing chain case bolts in the order as shown.

Bolt position	Tightening specification
1, 2	: 28.5 N·m (2.9 kg-m, 21 ft-lb)
3 – 22	: 12.8 N·m (1.3 kg-m, 9 ft-lb)

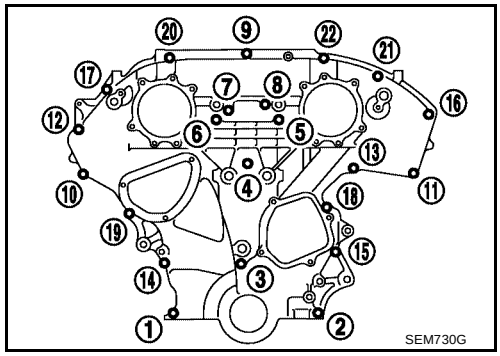

7. Install IVT control valve covers as follows:

a. Install new collared O-rings in front cover oil hole (LH and RH sides).

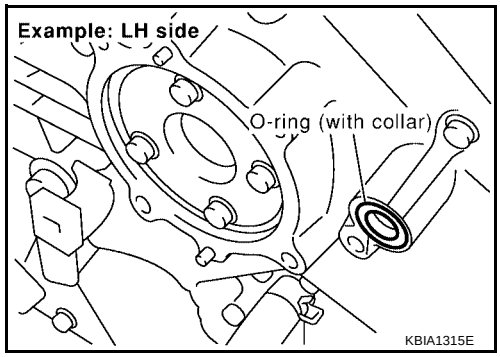

b. Install new seal rings on the IVT control covers.

c. Apply Silicone RTV Sealant to the IVT control covers.
   - Use Genuine Silicone RTV Sealant, or equivalent. Refer to GI-45, "RECOMMENDED CHEMICAL PRODUCTS AND SEALANTS" .

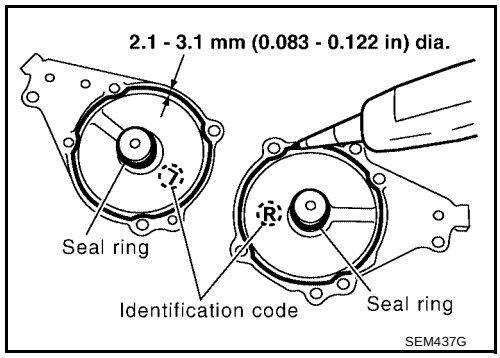

   - Being careful not to move the seal ring from the installation groove, align the dowel pins on the chain case with the holes to install the IVT control covers.
   - Tighten the intake valve timing control cover bolts in the order as shown.

Intake valve timing control cover bolts	: 11.3 N·m (1.2 kg-m, 100 in-lb)

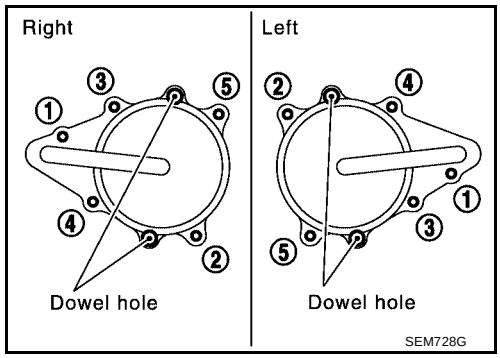

8. Apply liquid gasket and install the water pump cover and the chain tensioner cover.

   Water pump cover bolts : 11 N·m (1.1 kg-m, 97 in-lb)

   Chain tensioner cover bolts : 11 N·m (1.1 kg-m, 97 in-lb)

   - Use Genuine Silicone RTV Sealant or equivalent. Refer to GI-45, "RECOMMENDED CHEMICAL PRODUCTS AND SEALANTS".

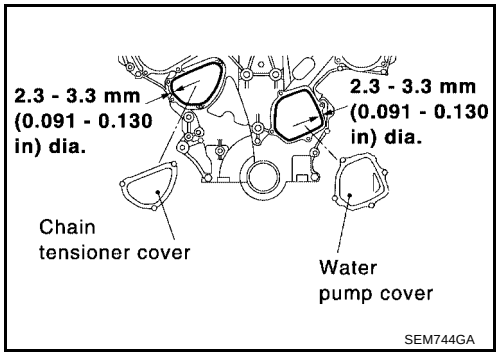

9. Install crankshaft pulley and tighten the bolt in two steps.
   - Lubricate thread and seat surface of the bolt with new engine oil.
   - For the second step of angle tightening. Use Tool.

   Step 1 : 44 N·m (4.5 kg-m, 32 ft-lb)

   Step 2 : 84° - 90° degrees clockwise

   Tool number : KV10112100 (BT-8653-A)

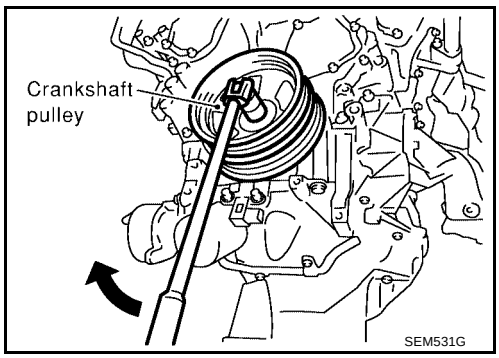

10. Remove Tool.

    Tool number : KV10117700 (J-44716)

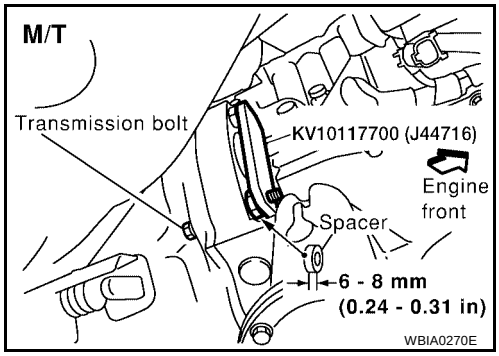

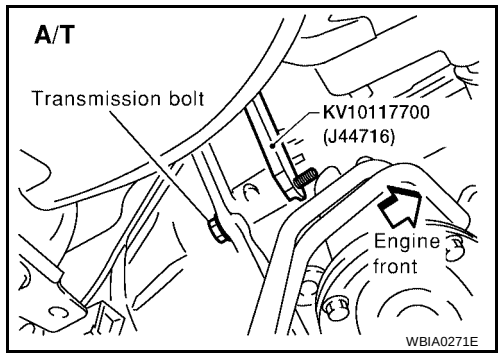

11. Rotate crankshaft pulley in normal direction (clockwise when viewed from front) to confirm it turns smoothly.
12. Installation of the remaining components is in reverse order of removal.

TIMING CHAIN

PFP:13028

Components

EBS00J61

SEC. 120•130•150•210•275

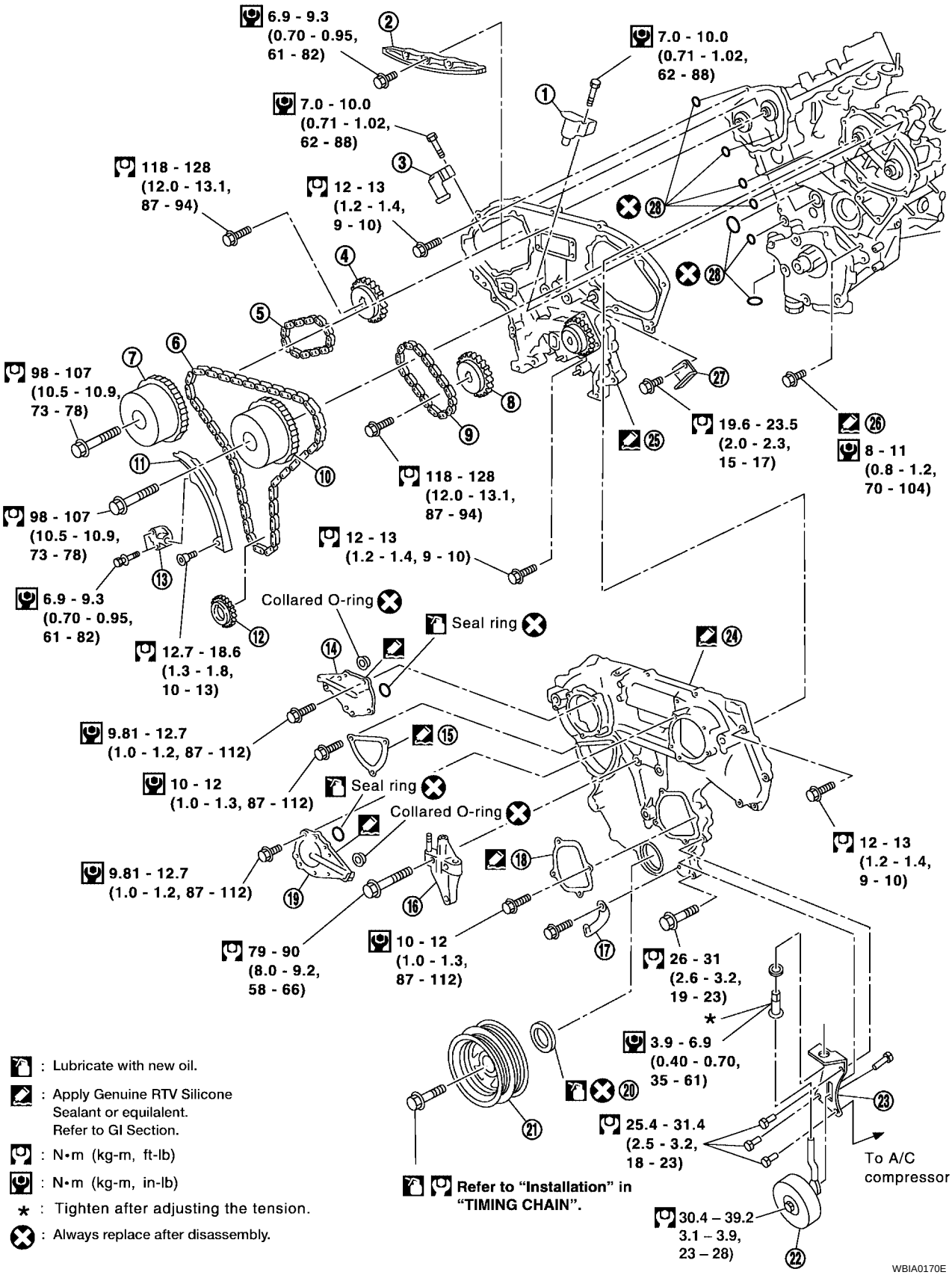

1. Timing chain tensioner
2. Internal chain guide
3. Timing chain tensioner
4. Camshaft sprocket (EXH)
5. Timing chain (secondary)
6. Timing chain (primary)
7. Camshaft sprocket (INT)
8. Camshaft sprocket (EXH)
9. Timing chain (secondary)
10. Camshaft sprocket (INT)
11. Slack guide
12. Crankshaft sprocket
13. Timing chain tensioner
14. IVT control valve cover - right
15. Chain tensioner cover
16. RH engine mounting bracket
17. Water hose clamp
18. Water pump cover
19. IVT control valve cover - left
20. Front oil seal
21. Crankshaft pulley
22. Idler pulley
23. Idler pulley bracket
24. Front timing chain case
25. Rear timing chain case
26. Water drain plug
27. Tension guide
28. O-ring

POSITION FOR APPLYING LIQUID GASKET

- Refer to EM-110, "LIQUID GASKET APPLICATION PROCEDURE" .
- Before installation, wipe off any protruding sealant.

Front timing chain case

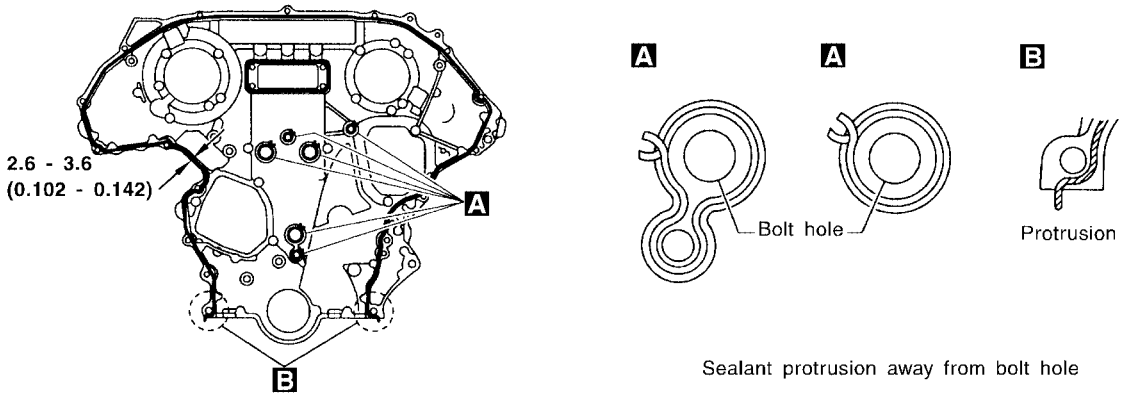

Rear timing chain case

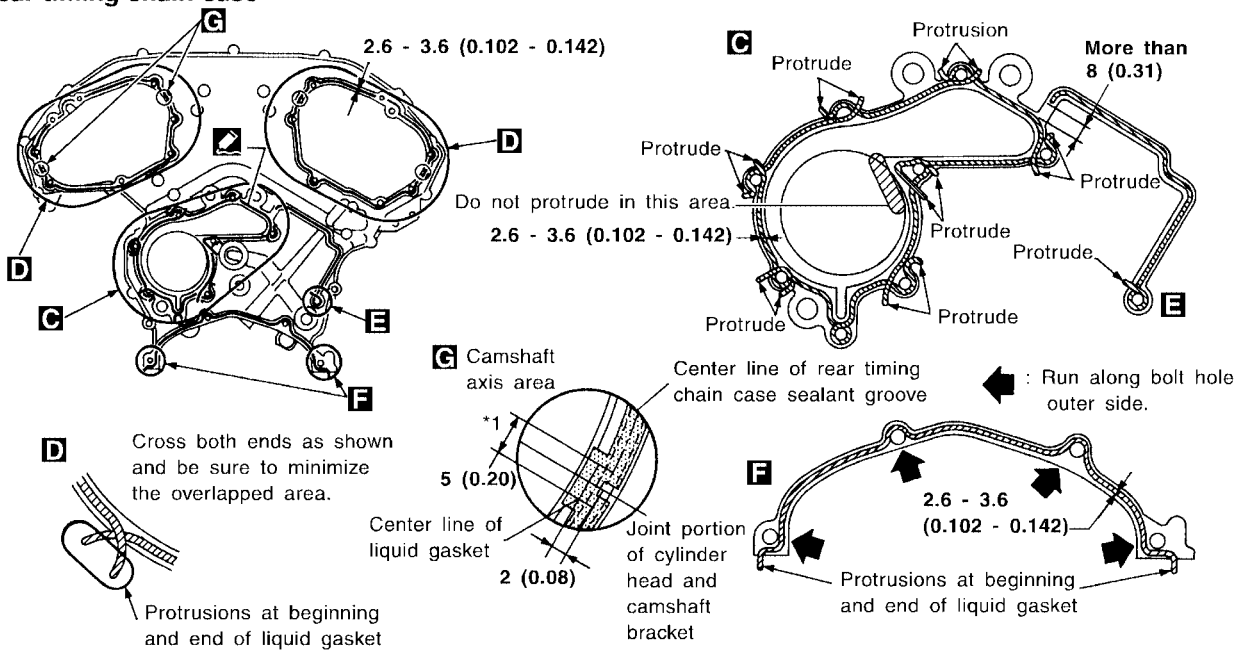

*1: Apply liquid gasket to the chamfered surface between camshaft bracket and cylinder head.

Camshaft bracket

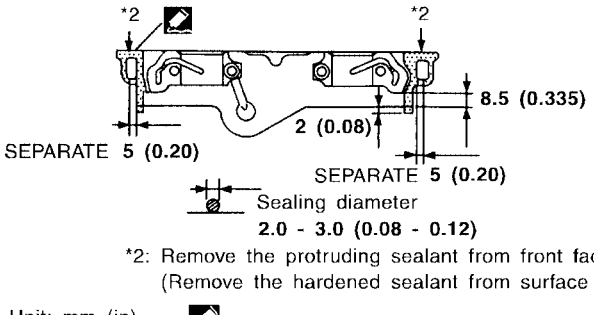

*2: Remove the protruding sealant from front face.
(Remove the hardened sealant from surface only.)

Rocker cover

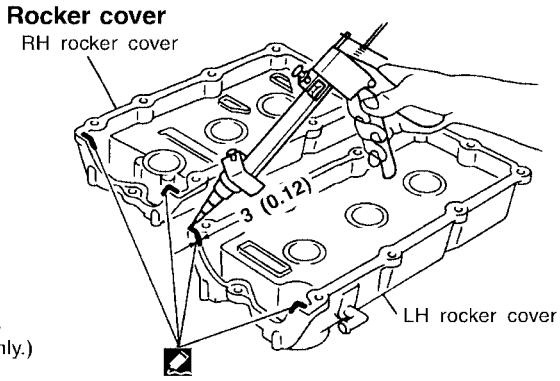

Unit: mm (in)

: Apply Genuine Anaerobic Liquid Gasket or equivalent. Refer to GI Section.

WBIA0171E

CAUTION:

- **After removing timing chain, do not turn the crankshaft and camshaft separately, or the valves will strike the pistons.**

- **When installing camshafts, chain tensioners, oil seals, or other sliding parts, lubricate contacting surfaces with new engine oil.**
- **Apply new engine oil to bolt threads and seat surfaces when installing camshaft sprockets, camshaft brackets, and crankshaft pulley.**
- **Before disconnecting fuel hose, release fuel pressure. Refer to EC-686, "FUEL PRESSURE RELEASE" .**
- **Before removing the upper oil pan, remove the crankshaft position sensor (POS).**
- **Be careful not to damage sensor edges.**
- **Do not spill engine oil or coolant on drive belts.**

Removal

EBS00J62

1. Release the fuel pressure. Refer to EC-686, "FUEL PRESSURE RELEASE" .
2. Remove the battery.
3. Drain the engine cooling system. Refer to CO-31, "DRAINING ENGINE COOLANT" .
4. Drain engine oil. Refer to MA-26, "Changing Engine Oil" .
5. Remove engine cover with power tool.
6. Remove the intake air duct with the air cleaner case lid and mass air flow sensor.
7. Remove the engine coolant reservoir.
8. Disconnect the fuel rail quick connector at the vehicle piping side. Refer to EM-147, "Removal and Installation" .
9. Remove the cowl top grille and the windshield wiper assembly. Refer to EI-18, "Removal and Installation" .
10. Remove the front RH wheel and tire with power tool.
11. Remove the engine undercovers with power tool.
12. Remove the inner fender splash shield with power tool.
13. Remove the drive belts and idler pulley.
14. Recover the A/C system R134a and remove the A/C compressor. Refer to ATC-102, "REFRIGERANT LINES" .
15. Dismount the power steering oil pump and reservoir tank. Tie them down with wire to reposition them out of the way.
16. Remove the lower and upper oil pans. Refer to EM-138, "Removal and Installation" .
17. Remove the A/C high pressure line. Refer to ATC-102, "REFRIGERANT LINES" .
18. Remove the alternator. Refer to SC-28, "Removal and Installation" .
19. Disconnect the engine harness and set aside.
20. Support the engine and remove the RH engine mount and bracket.
21. Remove the IVT control covers, right and left. Loosen the bolts in the numerical order as shown.

    NOTE:
    The shaft in the cover is inserted into the center hole of the intake camshaft sprocket. Remove the cover by pulling straight out until the cover disengages from the camshaft sprocket.
22. Remove the starter motor. Refer to SC-17, "Removal and Installation" .

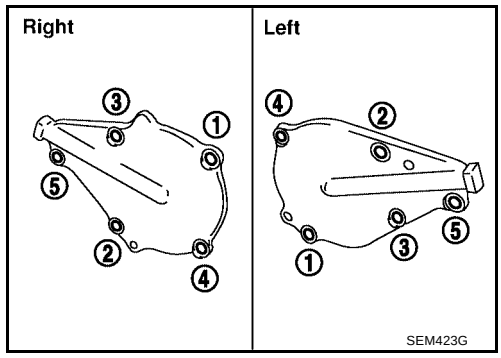

23. Obtain compression TDC of No. 1 cylinder as follows:

a. Rotate crankshaft pulley clockwise to align timing mark (grooved line without color) with timing indicator.

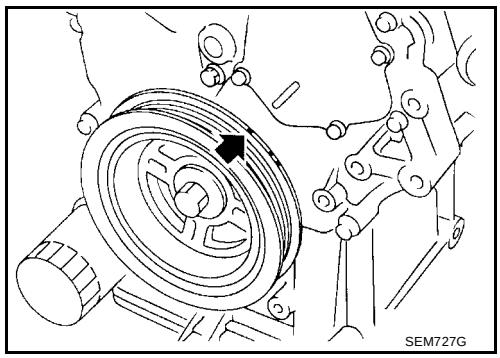

b. Check that intake and exhaust cam nose on No. 1 cylinder (engine front side of right) are located as shown.
   - If not, turn the crankshaft one revolution (360°) and align as shown.

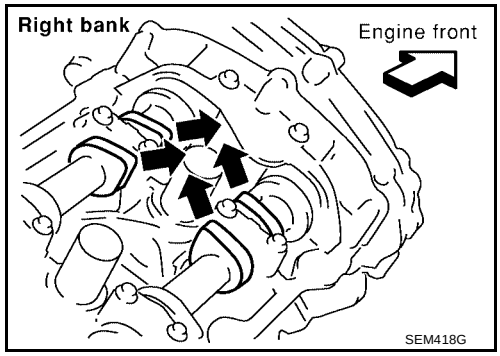

24. Set the ring gear stopper using the bolt hole.

CAUTION:
Do not damage the ring gear teeth, or the signal plate teeth behind the ring gear, when setting the stopper.

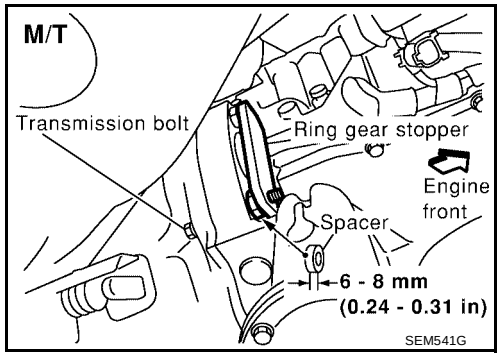

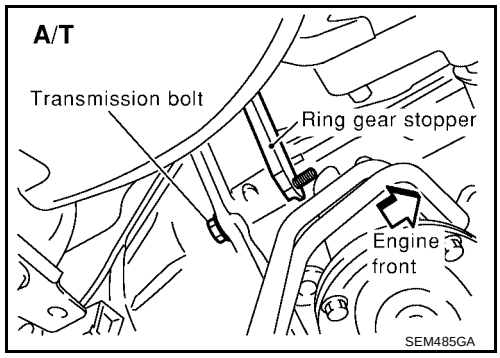

25. Remove the crankshaft pulley as follows:

a. Set the ring gear stopper using the bolt hole.

CAUTION:
Do not damage the ring gear teeth, or the signal plate teeth behind the ring gear when setting the stopper.

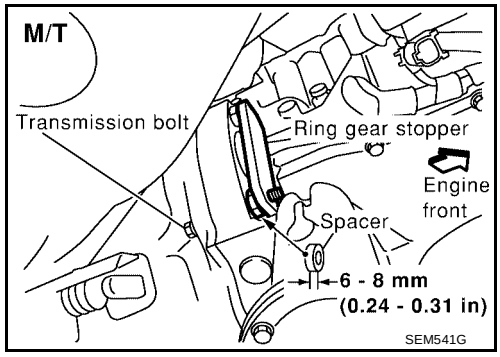

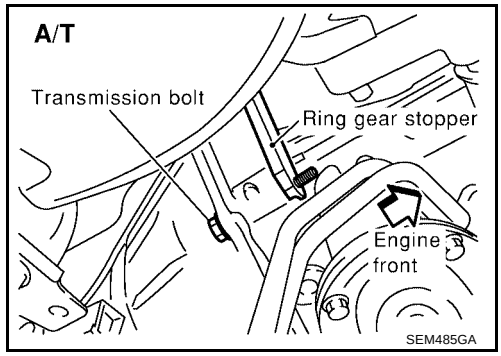

b. Loosen crankshaft pulley bolt using pulley holder and locate bolt seating surface at 10 mm (0.39 in) from its original position.

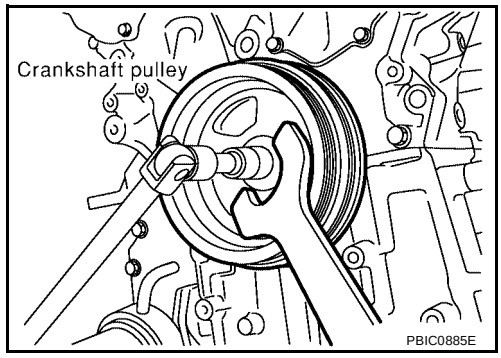

c. Position a pulley puller at recess hole of crankshaft pulley to remove crankshaft pulley.

CAUTION:

Do not use a puller claw on crankshaft pulley periphery.

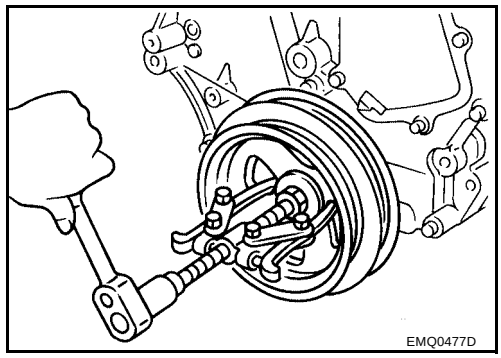

26. Remove the front timing chain case.

a. Loosen the bolts in the numerical order as shown.

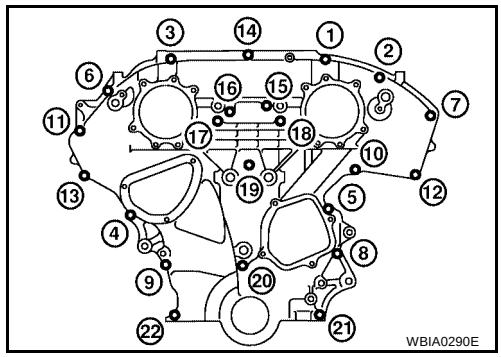

b. Insert the appropriate size tool into the notch (1) at the top of the front timing chain case as shown.

c. Pry off the case by moving the suitable tool (2) as shown.

- Use seal cutter or an equivalent tool to cut liquid gasket for removal.

CAUTION:

- **Do not use a screwdriver or similar tool.**
- **After removal, handle carefully so it does not bend, or warp under a load.**

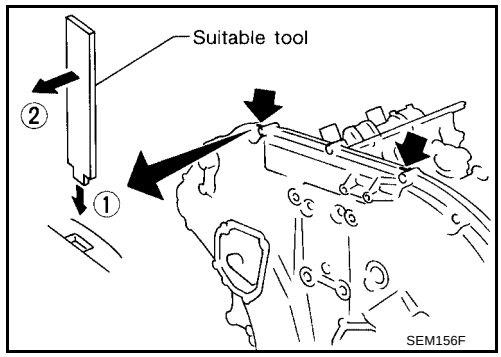

27. Disconnect the power brake booster vacuum hose.
28. Disconnect the electric throttle control actuator.
29. Disconnect the coolant hoses at the electric throttle control actuator.
30. Disconnect the PCV hose.
31. Disconnect the EVAP canister purge volume control solenoid vacuum hose.

32. Remove the intake manifold collector. Loosen the bolts and nuts in the numerical order as shown.

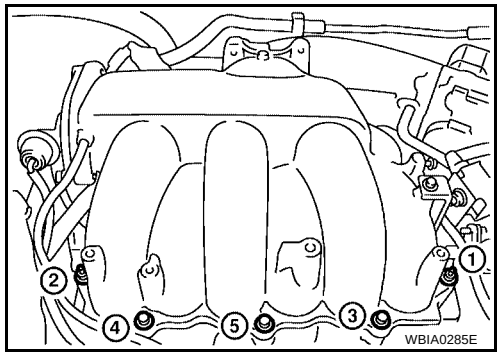

33. Remove the six ignition coils.
34. Remove the six spark plugs.
35. Remove the engine oil dipstick.

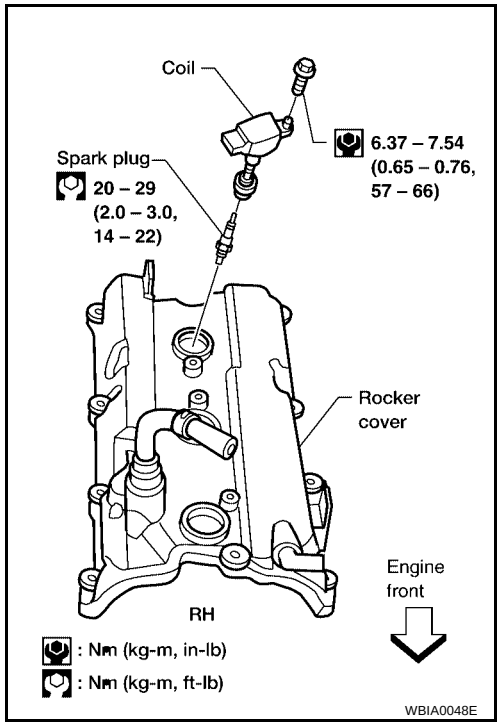

36. Remove the IVT control solenoid valves.
    - Discard the gaskets and use new gaskets for installation.

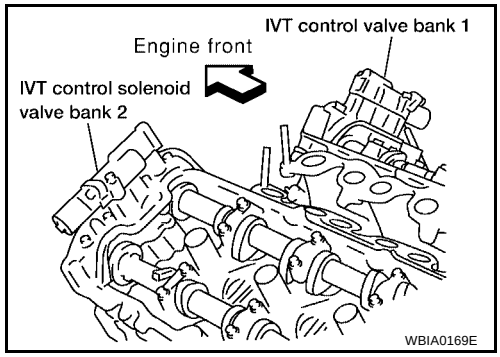

37. Remove the rocker covers. Loosen the bolts in the numerical order as shown.

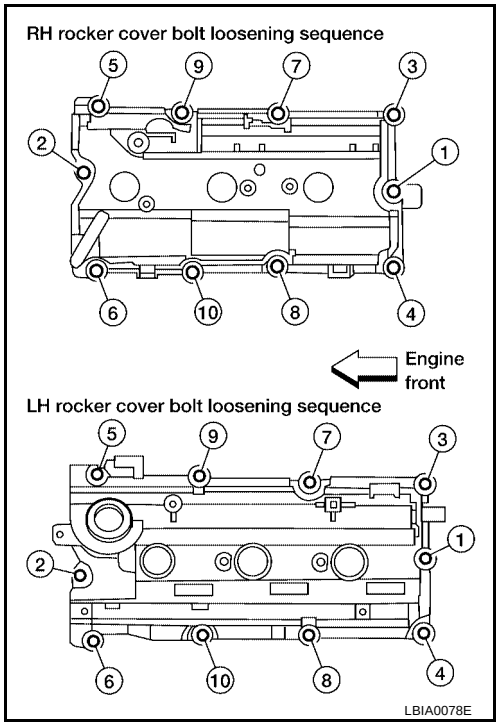

38. Place paint marks on the timing chain and sprockets to indicate the correct position of the components for installation.
39. Remove the internal chain guide.

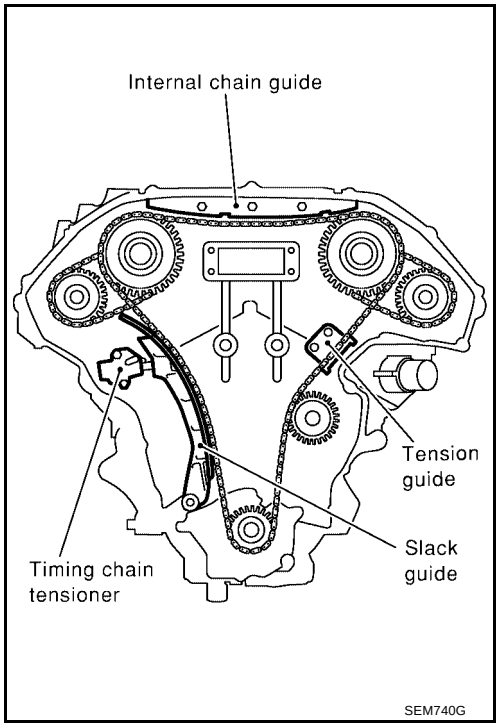

40. Remove the timing chain tensioner and slack side chain guide.

a. Pull lever down and release plunger stopper tab. Plunger stopper tab can be pushed up to release (coaxial structure with lever).

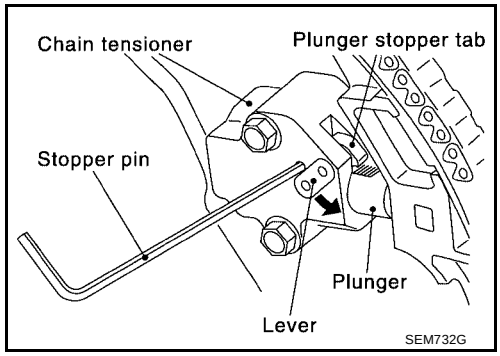

b. Insert stopper pin into tensioner body hole to hold lever, and keep the tab released. An Allen wrench [2.5 mm (0.098 in)] is used for a stopper pin as an example.

c. Insert plunger into tensioner body by pressing the slack side chain guide.

d. Keep the slack side chain guide pressed and hold it by pushing the stopper pin through the lever hole and body hole.

e. Remove the bolts and remove the timing chain tensioner.

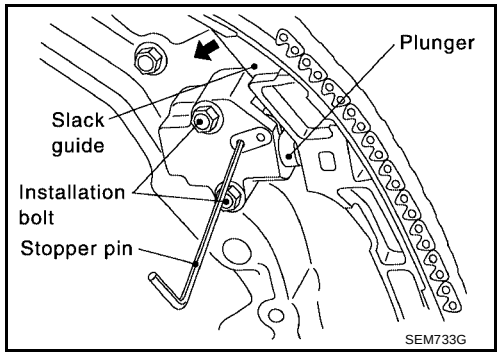

41. Remove primary timing chain and crankshaft sprocket.

CAUTION:
After removing timing chain, do not turn the crankshaft and camshaft separately, or the valves will strike the pistons.

42. Attach a suitable stopper pin to the right and left camshaft chain tensioners (for secondary timing chains).

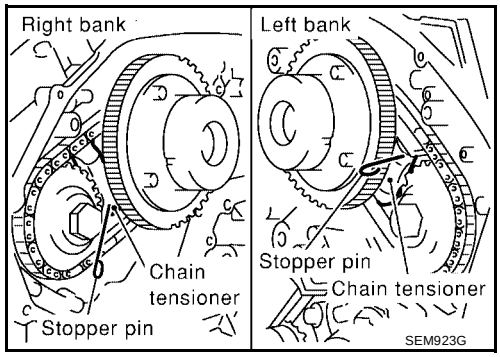

43. Remove the intake and exhaust camshaft sprocket bolts.
- Apply paint to the timing chain and camshaft sprockets for alignment during installation.
- Secure the hexagonal portion of the camshaft using a wrench to loosen the bolts.

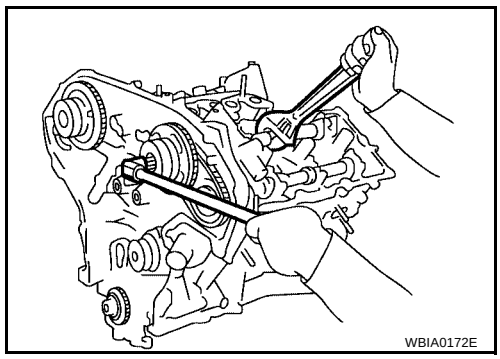

44. Remove the secondary timing chains with camshaft sprockets.

a. Rotate camshaft slightly, and slacken timing chain of timing chain tensioner -side.

b. Insert metal or resin plate [0.5 mm (0.020 in)] into guide between timing chain and chain tensioner plunger. Remove cam sprocket and secondary timing chain with timing chain removed from guide groove.

CAUTION:

Chain tensioner plunger can move, while stopper pin is inserted in tensioner. Plunger can come out of tensioner when timing chain is removed. Use caution during removal.

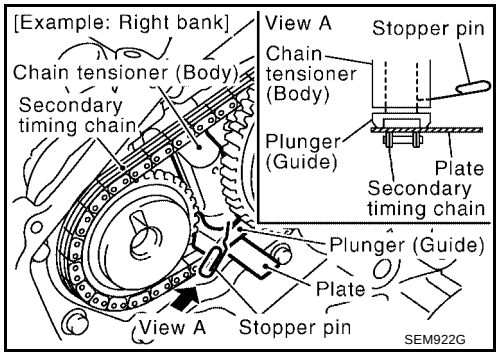

- Intake camshaft sprocket is two-for-one structure of primary and secondary sprockets.
- Handle the intake sprockets as an assembly.

CAUTION:

- **Avoid impact or dropping the intake sprockets.**
- **Do not disassemble the intake sprockets (never loosen bolts A and B as shown).**

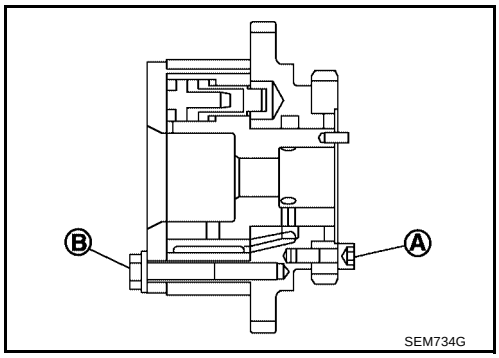

45. Remove the chain tension guide.

46. Remove the rear timing chain case.

CAUTION:

- **Do not remove the plate metal cover for the oil passage.**
- **After removing the chain case, do not apply any load to the case that might bend it.**

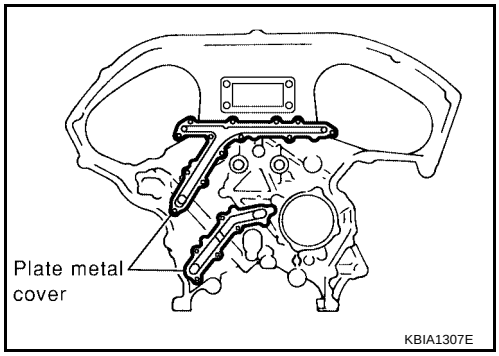

a. Loosen and remove the rear timing chain case bolts in the order as shown.

b. Cut the sealant with an appropriate tool and remove the rear timing chain case.

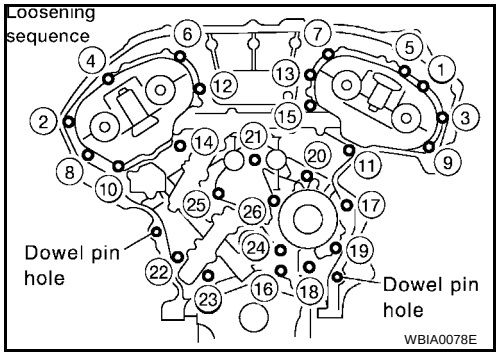

47. Remove O-rings to cylinder head and cylinder block.

48. Use a scraper to remove all of the old Silicone RTV Sealant from the front and rear timing chain case and opposite mating surfaces.

CAUTION:
Do not damage the mating surfaces.

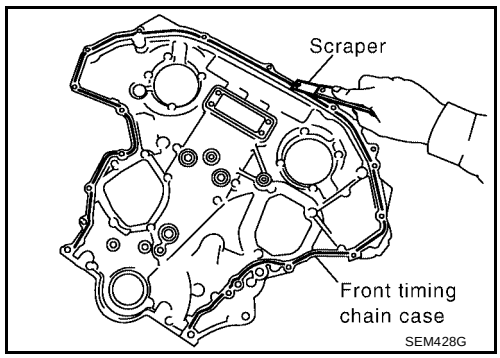

49. Remove all old Silicone RTV Sealant from all the bolt holes and bolts.

CAUTION:
Do not damage the threads or mating surfaces.

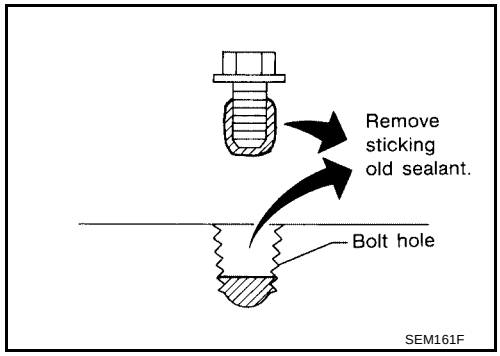

50. Use a scraper to remove all the old Silicone RTV Sealant from the water pump cover, chain tensioner cover and IVT control covers.

CAUTION:
Do not damage the mating surfaces.

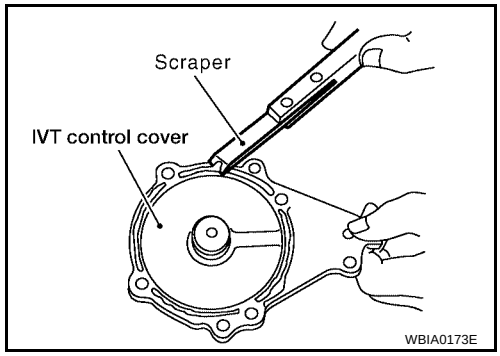

51. Remove the front oil seal from the front timing chain case using a suitable tool.

CAUTION:
Do not damage the front cover.

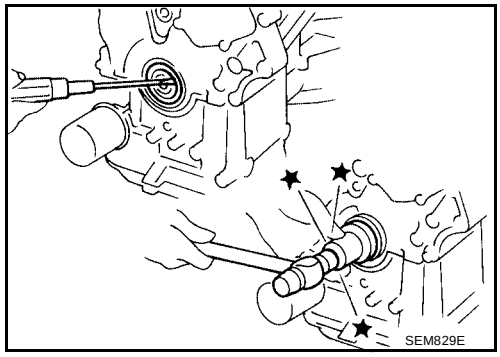

Inspection

EBS00J63

Check for cracks and any excessive wear of the timing chain. Replace the timing chain as necessary.

Installation

EBS00J64

NOTE:
The figure shows the relationship between the mating mark on each timing chain and that on the corresponding sprocket, the components installed.

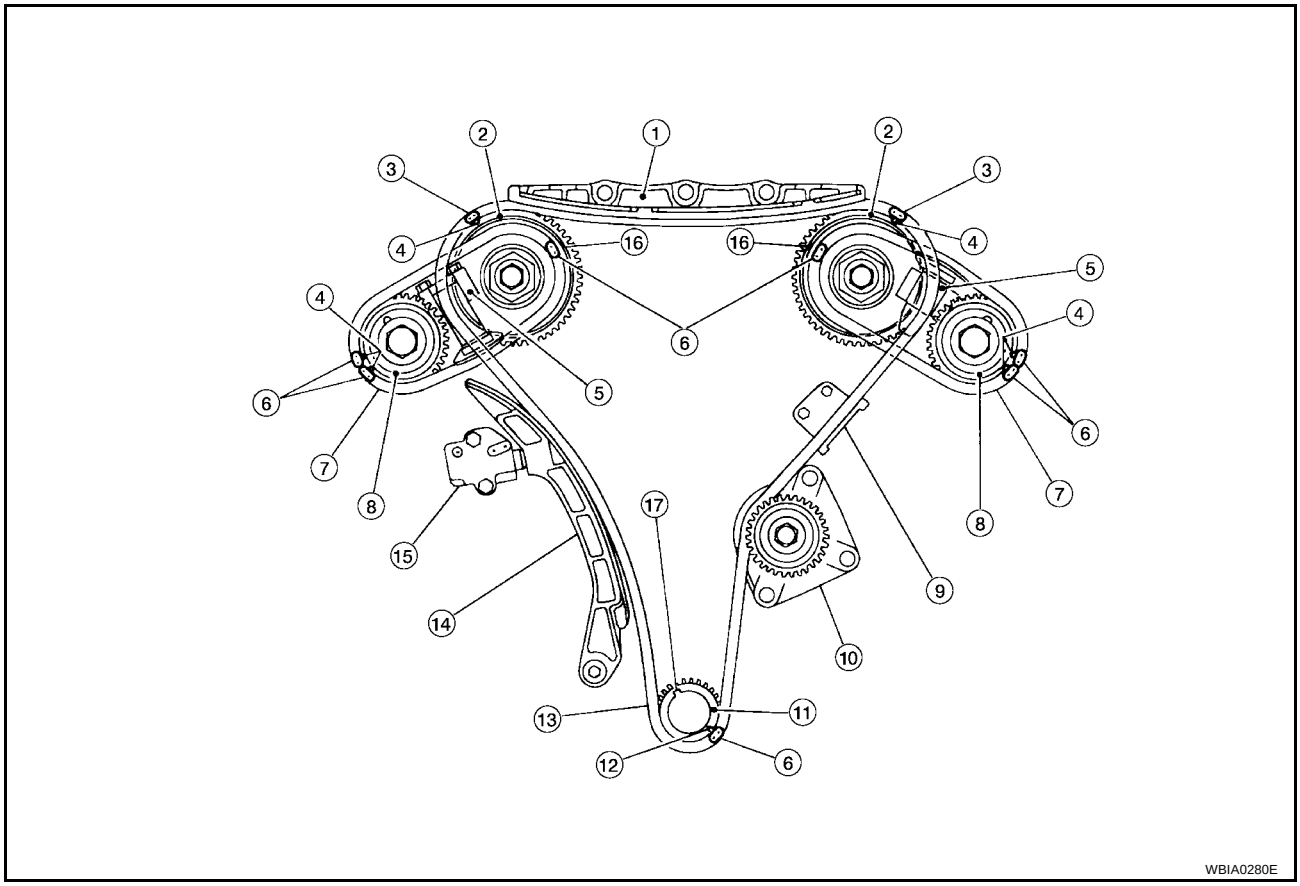

1. Internal chain guide	2. Camshaft sprocket (intake)	3. Mating mark (copper link)
4. Mating mark (punched)	5. Secondary timing chain tensioner	6. Mating mark (yellow link)
7. Secondary timing chain	8. Camshaft sprocket (exhaust)	9. Tensioner guide
10. Water pump	11. Crankshaft sprocket	12. Mating mark (notched)
13. Primary timing chain	14. Slack guide	15. Primary timing chain tensioner
16. Mating mark (back side)	17. Crankshaft key	

1. Install rear timing chain case as follows:

a. Install O-rings on cylinder block.

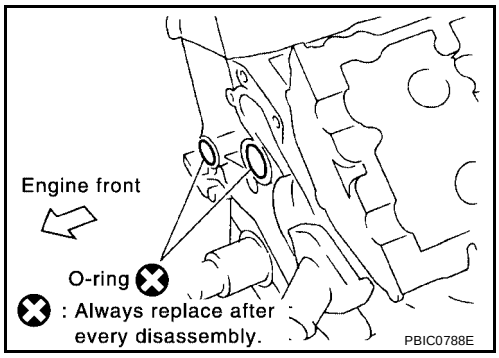

b. Install O-rings on cylinder head.

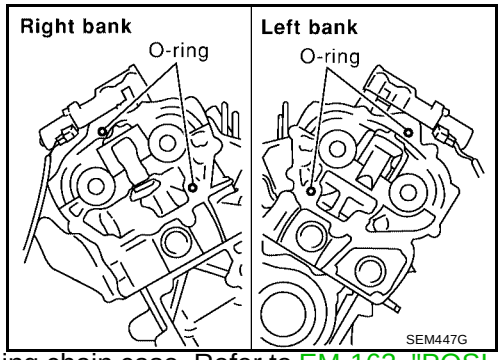

2. Apply Genuine Silicone RTV Sealant or equivalent, to the rear timing chain case. Refer to EM-163, "POSITION FOR APPLYING LIQUID GASKET" .
3. Align the rear timing chain case and water pump assembly with the dowel pins (RH and LH) on the cylinder block and install the case. Make sure the O-rings stay in place during installation.

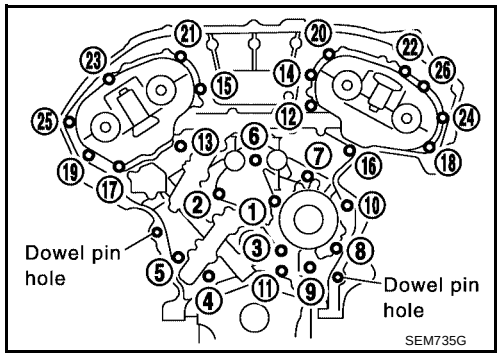

a. Tighten the bolts in the numerical order as shown. There are two bolt lengths used. Follow the chart below for proper bolt length specifications.

Bolt position	Bolt length
1, 2, 3, 6, 7, 8, 9, 10	20 mm (0.79 in)
4, 5, 11 - 26	16 mm (0.63 in)

b. After all bolts are initially tightened, retighten them to the specification in the numerical order as shown.

Rear timing chain case bolts : 12 - 13 N·m (1.2 - 1.4 kg-m, 9 -10 ft-lb)

4. Install the timing chain tension guide.
5. Position the crankshaft so No. 1 piston is set at TDC on the compression stroke.
   - Make sure that the dowel pin hole, dowel pin and crankshaft key are located as shown.
     Camshaft dowel pin hole (intake side): at cylinder head upper face side in each bank.
     Camshaft dowel pin (exhaust side): at cylinder head upper face side in each bank.
     Crankshaft key: at cylinder head side of RH bank.

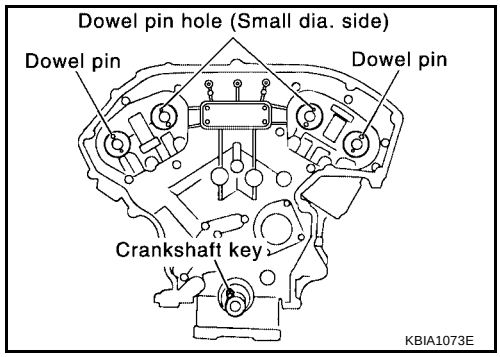

CAUTION:
Hole on small diameter side must be used for intake camshaft sprocket dowel pin. Do not misidentify (ignore big diameter side).

6. Install the secondary timing chains and camshaft sprockets.

CAUTION:
Matching marks between the timing chain and sprockets slip easily. Confirm all matching mark positions repeatedly during the installation process.

- Push the sleeve of the secondary chain tensioner and keep it pressed in with a stopper pin.

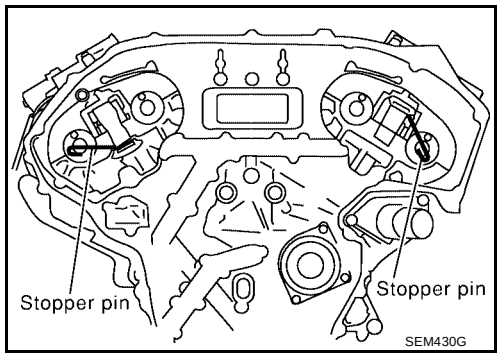

a. Align the matching marks on the secondary timing chain (gold link) with the ones on the intake and exhaust sprockets (stamped), and install them.
   - Matching marks for the intake sprocket are on the back side of the secondary sprocket.
   - There are two types of matching marks, round and oval types. They should be used for the RH and LH banks, respectively.
     RH bank: use round type.
     LH bank: use oval type.

b. Align the dowel pin and pin hole on the camshaft with the groove and dowel pin on the sprocket, and install them.
   - On the intake side, align the pin hole on the small diameter side of the camshaft front end with the dowel pin on the back side of the camshaft sprocket, and install them.
   - On the exhaust side, align the dowel pin on the camshaft front end with the pin groove on the camshaft sprocket, and install them.
   - Bolts for the camshaft sprockets must be tightened in the next step. Tightening them by hand is enough to prevent the dislocation of the dowel pins.

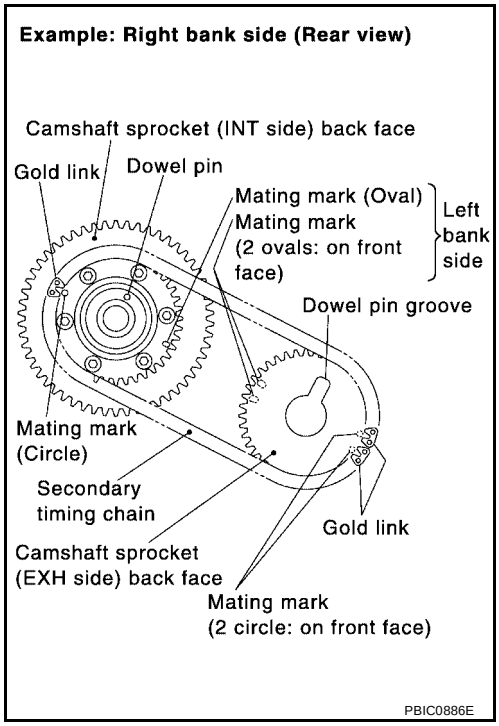

   - It may be difficult to visually check the dislocation of mating marks during and after installation. To make the matching easier, make a mating mark on the sprocket teeth in advance with paint.

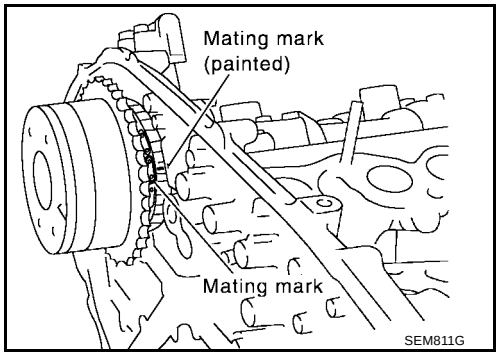

7. After confirming the mating marks are aligned, tighten the camshaft sprocket bolts.
   - Secure the camshaft using a wrench at the hexagonal portion to tighten the bolts.

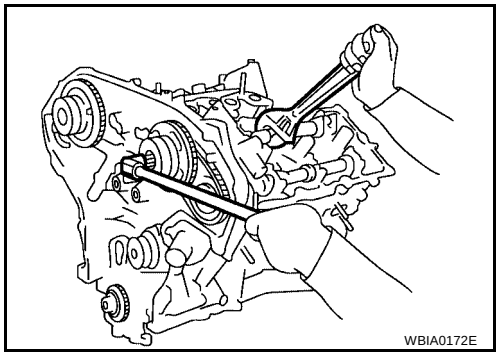

8. Pull the stopper pins out from the secondary timing chain tensioners.

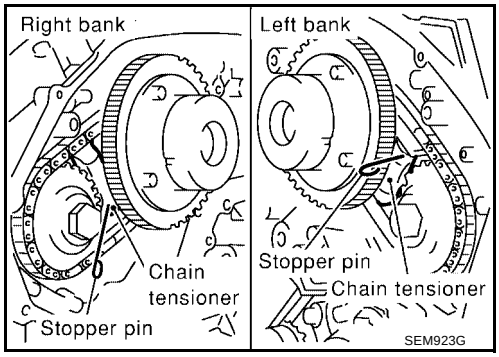

9. Install the crankshaft sprocket on the crankshaft.
   - Make sure the mating marks on the crankshaft sprocket face the front of the engine.

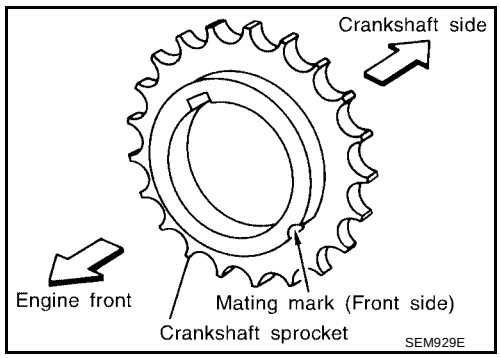

10. Install the primary timing chain.
    - Install primary timing chain so the mating mark (punched) on camshaft sprocket is aligned with the copper link on the timing chain, while the mating mark (notched) on the crankshaft sprocket is aligned with the orange one on the timing chain, as shown.
    - When it is difficult to align mating marks of the primary timing chain with each sprocket, gradually turn the camshaft using a wrench on the hexagonal portion to align it with the mating marks.
    - During alignment, be careful to prevent dislocation of mating mark alignments of the secondary timing chains.

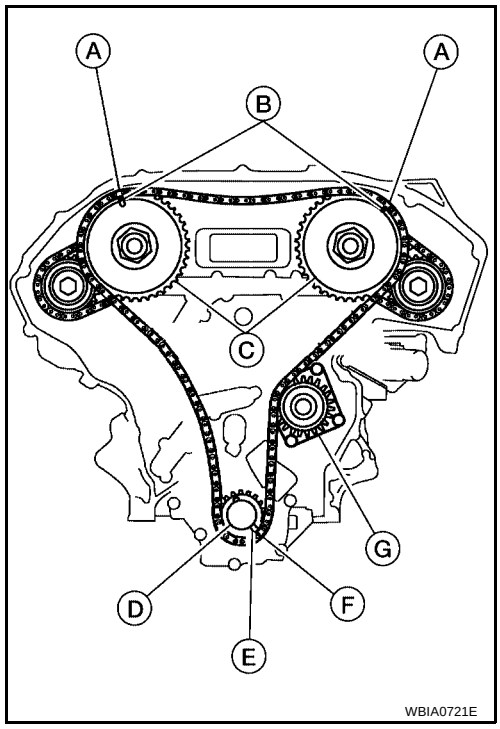

11. Install the internal chain guide.

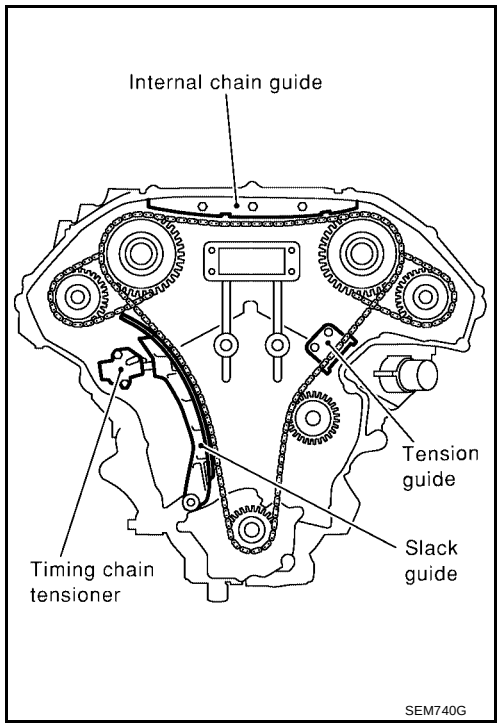

12. Install the slack guide.
    - Do not overtighten the slack guide bolts. It is normal for a gap to exist under the bolt seats when the bolts are tightened to specification.

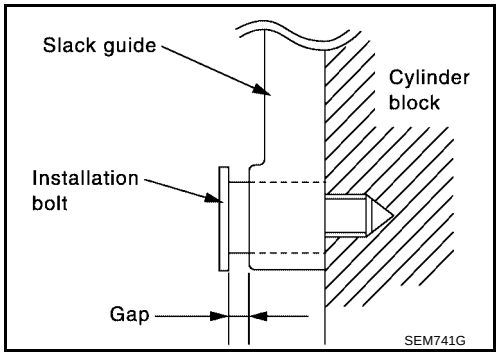

13. Install the timing chain tensioner for the slack guide.
    - When installing the chain tensioner, push in the sleeve and keep it pressed in with the stopper pin.
    - Remove any dirt and foreign materials completely from the back and the mounting surfaces of the chain tensioner.
    - After installation, pull out the stopper pin while pressing the slack guide.
14. Reconfirm that the matching marks on the sprockets and the timing chain have not slipped out of alignment.

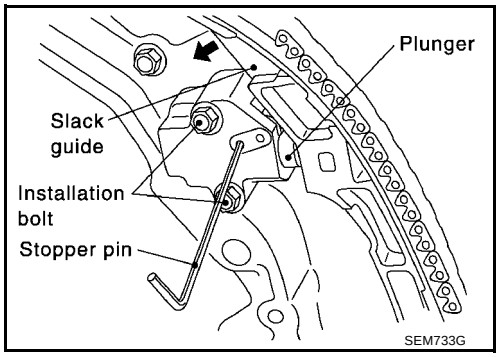

15. Install new O-rings on the rear timing chain case.

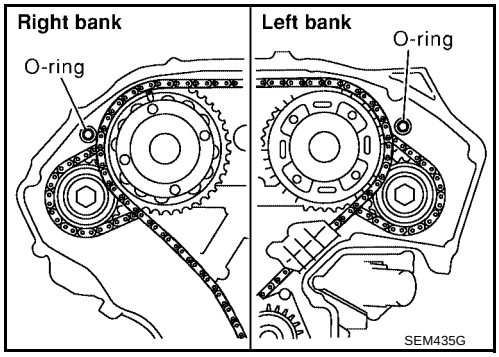

16. Install the front oil seal on the front timing chain case using a suitable tool. Apply clean engine oil to the oil seal edges.
    - Install it so that each seal lip is oriented as shown.

    Suitable drift

    Outer diameter : 59 mm (2.32 in)

    Inner diameter : 49 mm (1.93 in)

    CAUTION:
    Press fit straight and avoid causing burrs or tilting the oil seal.

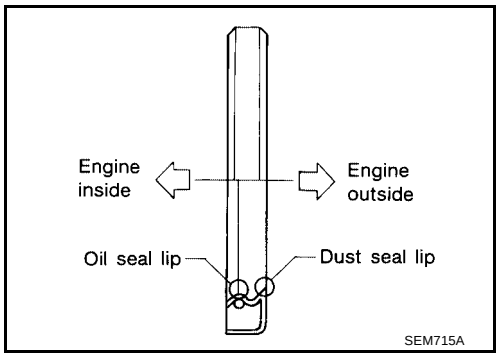

- Using a suitable drift, press-fit oil seal until it becomes flush with timing chain case end face.
- Make sure the garter spring in the oil seal is in position and seal lip is not inverted.

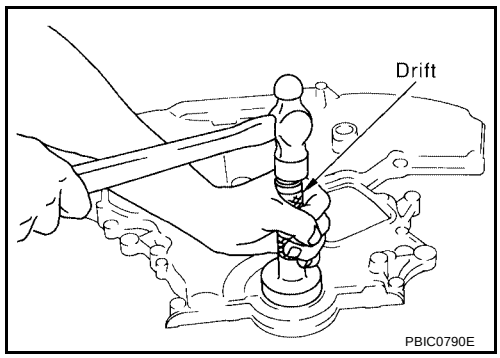

17. Apply Silicone RTV Sealant to front timing chain case.
    Refer to EM-163, "POSITION FOR APPLYING LIQUID GASKET" .
    - Use Genuine Silicone RTV Sealant, or equivalent. Refer to MA-12, "RECOMMENDED FLUIDS AND LUBRICANTS" .
    - **Before installation, wipe off the protruding sealant.**
18. Install the rear case pin into dowel pin hole on front timing chain case.
19. Tighten bolts to the specified torque in order as shown.

Bolt position	
1, 2	**: 25.5 - 31.4 N·m (2.6 - 3.2 kg-m, 18.8 - 23.1 ft-lb)**
3 - 22	**: 11.8 - 13.7 N·m (1.2 - 1.4 kg-m, 8.7 - 10.1 ft-lb)**

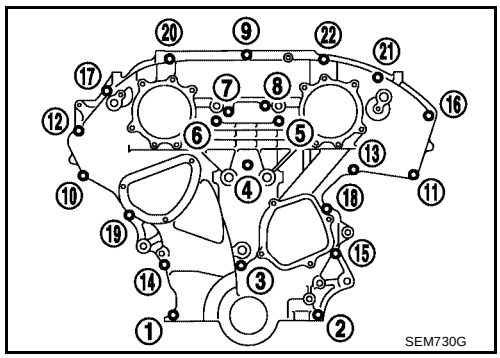

20. After installing the front timing chain case, check the surface height difference between the following parts on the oil pan mating surface.
    - If not within specification, repeat the installation procedure.

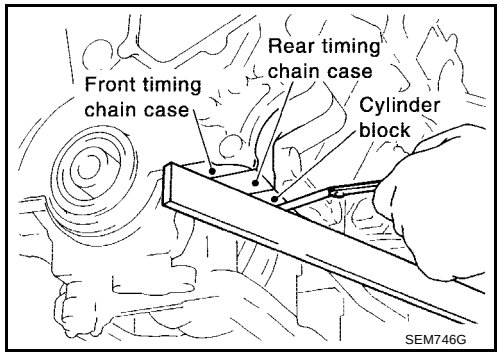

Front timing chain case to rear timing chain case	**: (–0.14) - 0.14 mm [(–0.0055) - 0.0055 in]**
Oil pump to cylinder block	**: (–0.36) - (–0.10) mm [(–0.0142) - (–0.0039) in]**
Rear timing chain case to cylinder block	**: (–0.24) - 0.14 mm [(–0.0094) - 0.0055 in]**

21. Install IVT control valve covers as follows:

a. Install new collared O-rings in front cover oil hole (LH and RH sides).

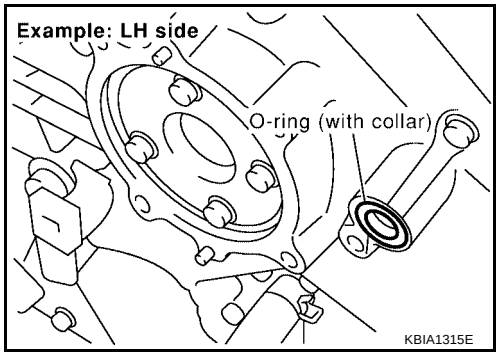

b. Install new seal rings on the IVT control covers.

c. Apply Silicone RTV Sealant to the IVT control covers.
Use Silicone RTV Sealant, or equivalent. Refer to GI-45, "RECOMMENDED CHEMICAL PRODUCTS AND SEALANTS" .

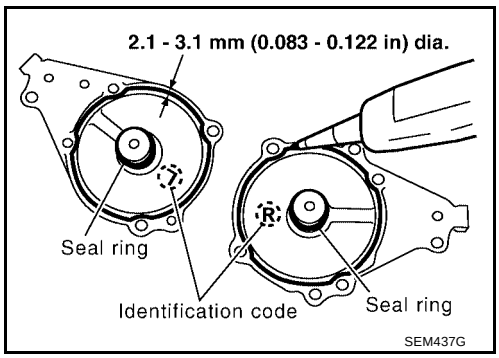

- Being careful not to move the seal ring from the installation groove, align the dowel pins on the chain case with the holes to install the IVT control covers.
- Tighten in the numerical order as shown.

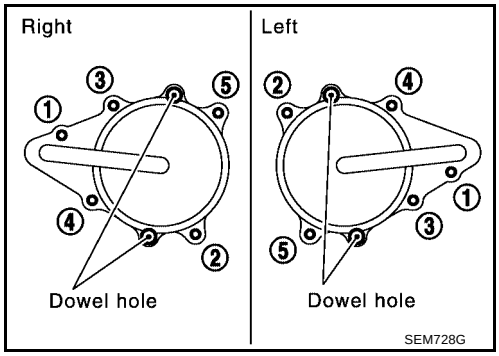

22. Install the water pump cover and the chain tensioner cover. Apply Silicone RTV Sealant or equivalent. Refer to GI-45, "RECOMMENDED CHEMICAL PRODUCTS AND SEALANTS" .

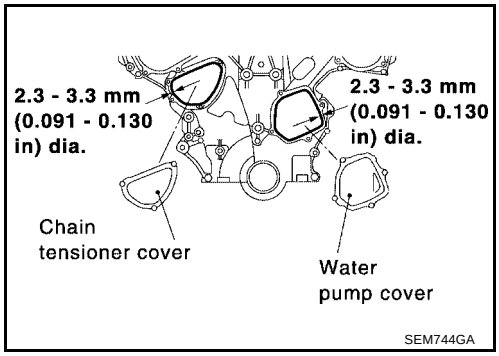

23. Install the RH and LH rocker covers.
Rocker cover tightening procedure:
- **Tighten the rocker cover bolts in two stages in the numerical order as shown.**

Stage 1 : 0.96 - 2.96 N·m (0.1 - 0.3 kg-m, 9 - 26 in-lb)
Stage 2 : 7.33 - 9.33 N·m (0.75 - 0.95 kg-m, 65 - 82 in-lb)

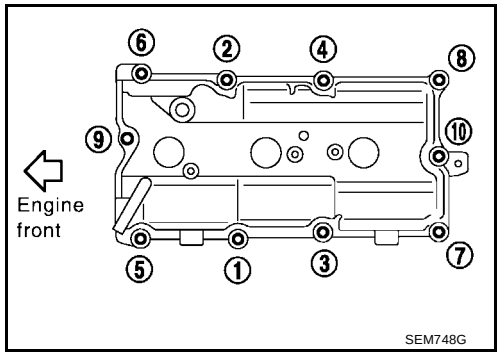

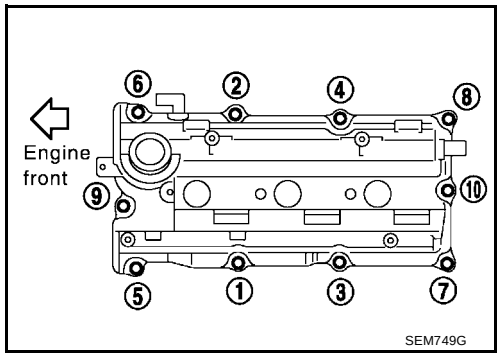

24. Install the IVT control solenoid valve bank 1 and bank 2.

IVT control solenoid valve bank 1 : 10 - 12 N·m (1.0 - 1.3 kg-m, 87 - 112 in-lb)

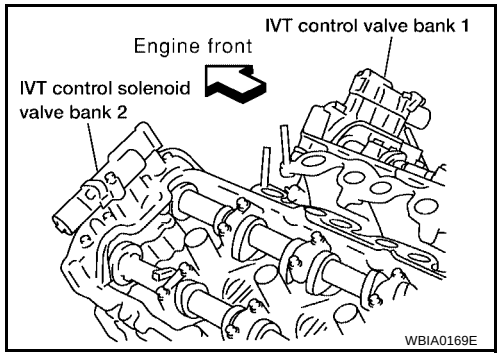

25. Install the engine oil dipstick.

26. Install the six spark plugs to their original positions.

Spark plugs (6) : 20 - 29 N·m (2.0 - 3.0 kg-m, 14 - 22 ft-lb)

27. Install the six ignition coils to their original positions.

Ignition coils (6) : 6.37 - 7.54 N·m (0.65 - 0.76 kg-m, 57 - 66 in-lb)

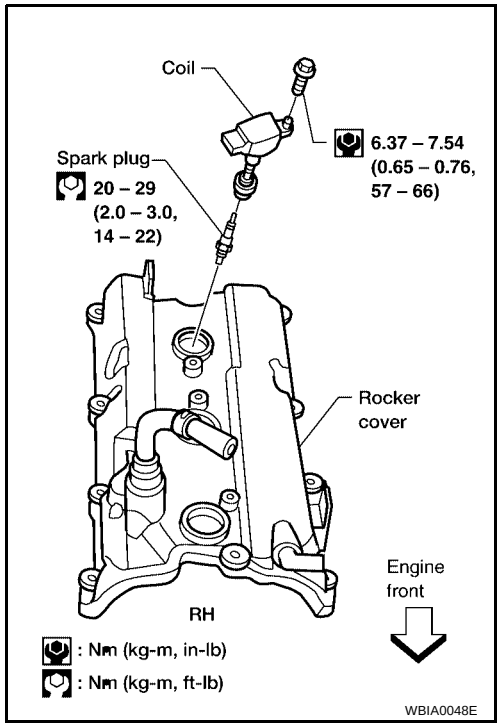

28. Install the intake manifold collector. Tighten the bolts and nuts in numerical order as shown.

    Intake manifold collector bolts : 18 - 21 N·m (1.8 - 2.2 kg-lb, 13 - 15 ft-lb)

29. Connect the EVAP purge volume control solenoid hose.
30. Connect the PCV hose.
31. Connect the coolant hoses to the electric throttle control actuator.
32. Connect the power brake booster vacuum hose.
33. Connect the electric throttle control actuator harness electrical connector.

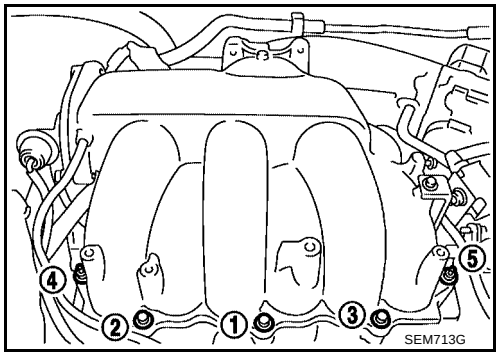

34. Install crankshaft pulley and tighten the bolt in two steps.
    - Lubricate thread and seat surface of the bolt with new engine oil.
    - For the second step of angle tightening. Use Tool.

    Step 1 : 44 N·m (4.5 kg-m, 32 ft-lb)
    Step 2 : 84° - 90° degrees clockwise

    Tool number : KV10112100 (BT-8653-A)

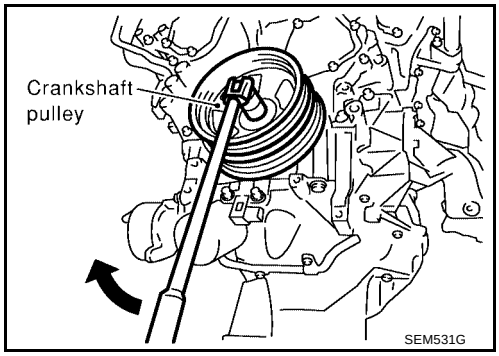

35. Remove Tool.

    Tool number : KV10117700 (J-44716)

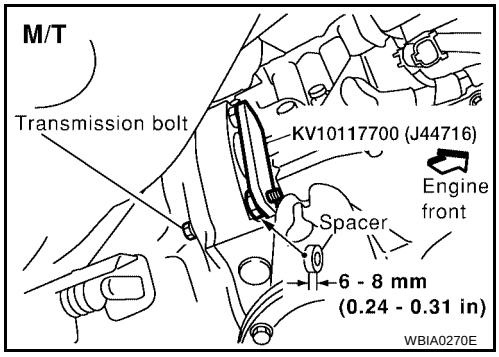

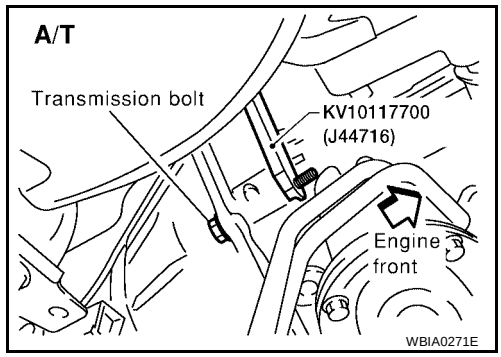

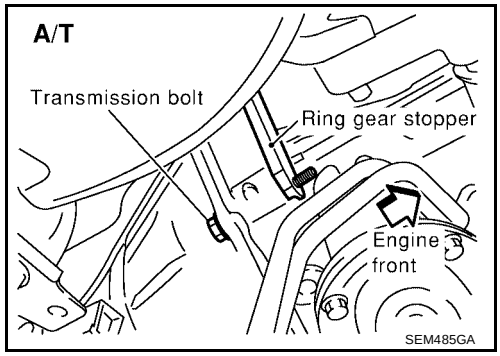

36. Install the starter motor.
    Refer to SC-17, "Removal and Installation" .
37. Install the RH engine mount and bracket.

Engine mount to frame bolts (2)	**: 66 - 74 N·m (6.7 - 7.6 kg-m, 49 - 54 ft-lb)**
Engine mount bracket to front cover bolts (2)	**: 79 - 90 N·m (8.0 - 9.2 kg-m, 58 - 66 ft-lb)**
Engine mount bracket to front cover nut (1)	**: 10 - 15 N·m (1.0 - 1.6 kg-m, 87 - 138 in-lb)**
Engine mount to bracket nuts (2)	**: 49 - 58 N·m (5.0 - 6.0 kg-m, 37 - 43 ft-lb)**

38. Reposition and reconnect the engine harness.
39. Install the alternator.
    Refer to SC-28, "Removal and Installation" .
40. Install the upper and lower oil pans.
    Refer to EM-138, "Removal and Installation" .
41. Install the power steering pump.
    Refer to PS-22, "Removal and Installation" .
42. Install the A/C compressor and recharge the system.
    Refer to ATC-107, "Removal and Installation for Compressor — VQ35DE Models" .
43. Install the idler pulley and the drive belts.
    Refer to EM-119, "Checking Drive Belts" .
44. Install the inner fender splash shield and the engine undercovers.
45. Install the RH wheel and tire.
    Refer to WT-5, "WHEEL AND TIRE ASSEMBLY" .
46. Install the windshield wiper assembly and the cowl top grille.
    Refer to EI-18, "Removal and Installation" .
47. Install the fuel hose quick connector to the fuel tube at the vehicle piping side.
    Refer to EM-147, "Removal and Installation" .
48. Install the engine coolant reservoir.
49. Install the intake air duct with the air cleaner case lid and mass air flow sensor.
50. Install engine cover.
51. Refill the engine with oil and coolant.
    Refer to MA-12, "Fluids and Lubricants" .

    CAUTION:
    Wait at least 30 minutes for the Silicone RTV Sealant to set before filling the engine with fluids to avoid leaks.
52. Install the battery.
53. Activate the fuel system. Check for any leaks when the system is repressurized and correct as necessary.
54. Start the engine and check all systems for leaks or improper operation. Correct as necessary.
    - **After starting engine, keep idling for three minutes. Then rev engine up to 3,000 rpm under no load to purge air from the high-pressure oil chamber of the chain tensioners. The engine may produce a rattling noise. This indicates that air still remains in the chamber and is not a matter of concern.**

CAMSHAFT

PFP:13001

Removal and Installation

EBS00J65

SEC. 111•118•130•140•220

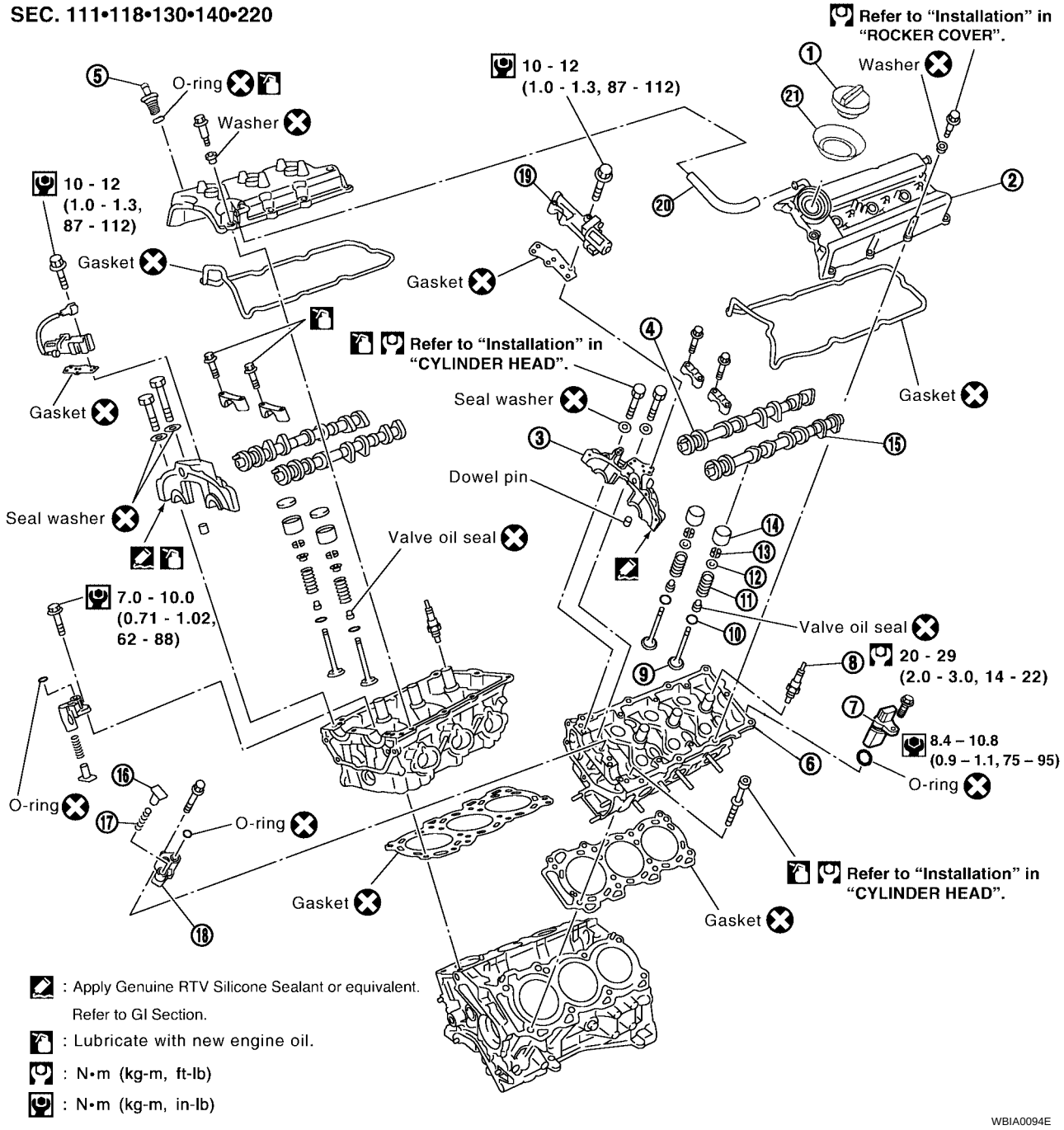

1.	Oil filler cap	2.	Rocker cover (LH)	3.	Camshaft bracket (LH)
4.	Camshaft (INT)	5.	PCV valve	6.	Cylinder head
7.	Camshaft position sensor (PHASE)	8.	Spark plug	9.	Valve
10.	Valve spring seat	11.	Valve spring	12.	Valve spring retainer
13.	Valve collet	14.	Valve lifter	15.	Camshaft (EXH)
16.	Tensioner sleeve	17.	Tensioner spring	18.	Chain tensioner
19.	IVT control solenoid valve	20.	PCV hose	21.	Oil catcher

CAUTION:

Apply new engine oil to parts marked in illustration before installation.

REMOVAL

1. Remove the timing chains. Refer to EM-164, "Removal" .
2. Remove the fuel rail and injectors. Refer to EM-147, "Removal and Installation" .
3. If necessary, remove camshaft position sensor (PHASE) (RH and LH bank) from cylinder head back side.

   CAUTION:
   - **Handle carefully to avoid dropping an shocks.**
   - **Do not disassemble.**
   - **Do not allow metal powder to adhere to magnetic part at sensor tip.**
   - **Do not place sensors in a location where they are exposed to magnetism.**

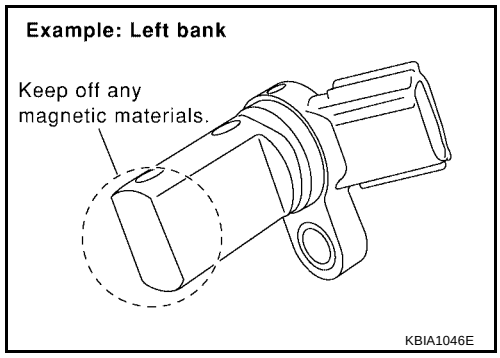

4. Remove the IVT control solenoid valves.
   - Discard the IVT control solenoid valve gaskets and use new gaskets for installation.

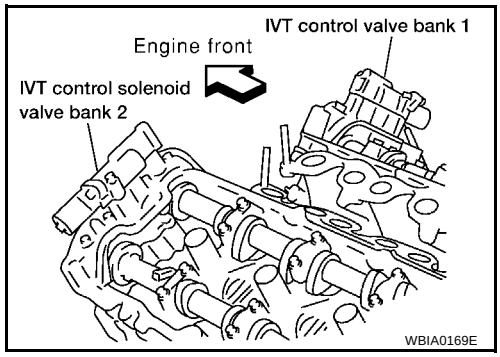

5. Remove the intake and exhaust camshaft brackets and the camshafts.
   - Mark the camshafts, camshaft brackets, and bolts so they are placed in the same position and direction for installation.
   - Equally loosen the camshaft bracket bolts in several steps in the numerical order as shown.

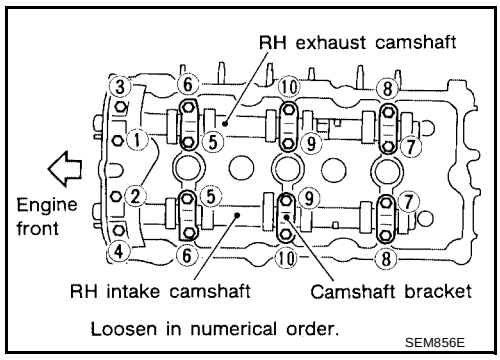

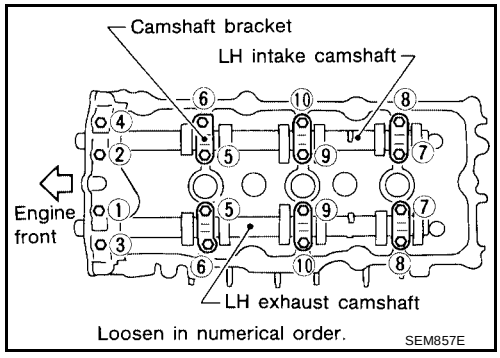

6. Remove valve lifters.

   NOTE:
   Identify installation positions to ensure proper installation.

7. Remove secondary timing chain tensioner from cylinder head
   - Remove secondary tensioner with its stopper pin attached.

   NOTE:
   Stopper pin was attached when secondary timing chain was removed.

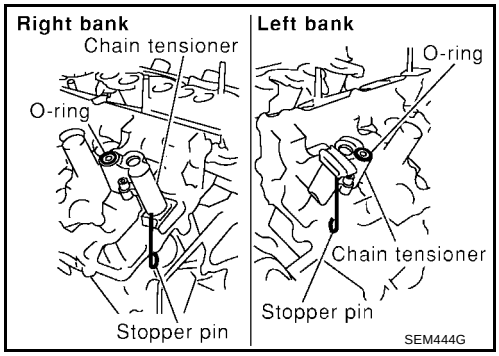

INSTALLATION

1. Before installation, remove any old Silicone RTV Sealant from component mating surfaces using a scraper.
   - Remove the old Silicone RTV Sealant from the bolt holes and threads.
   - Do not scratch or damage the mating surfaces.

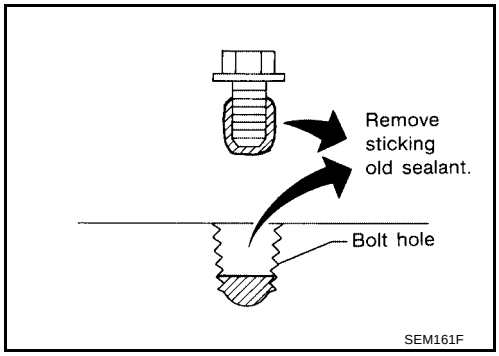

2. Before installing the front cam bracket, remove the old Silicone RTV Sealant from the mating surface using a scraper.
   - Do not scratch or damage the mating surface.

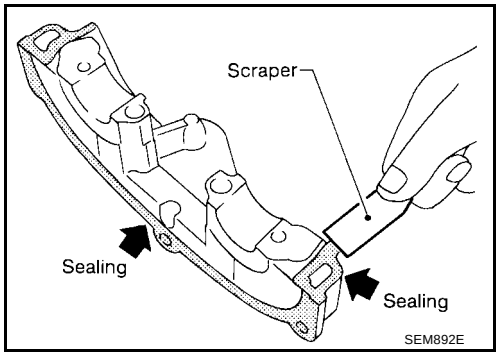

3. Turn the crankshaft until No. 1 piston is set at TDC on the compression stroke.
   - The crankshaft key should line up with the right bank cylinder center line as shown.

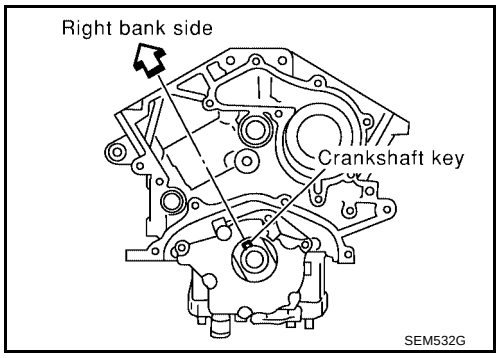

4. Install camshaft chain tensioners on both sides of cylinder head.

Camshaft chain tensioner bolts **: 7 - 10 N·m (0.7 - 1.0 kg-m, 62 - 89 in-lb)**

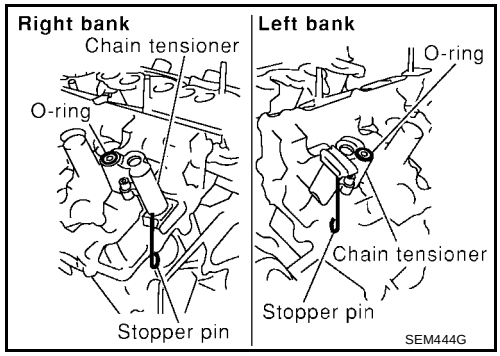

5. Install valve lifters.

NOTE:
Install them in original positions.

6. Install exhaust and intake camshafts and camshaft brackets.
   - Intake camshaft has a drill mark on camshaft sprocket mounting flange.

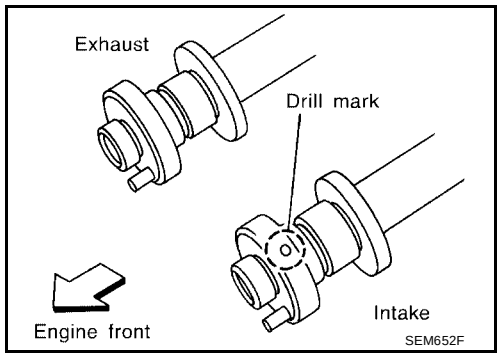

   - Follow your identification marks made during removal, or follow the identification marks that are present on the new camshafts components for proper placement and direction of the components.

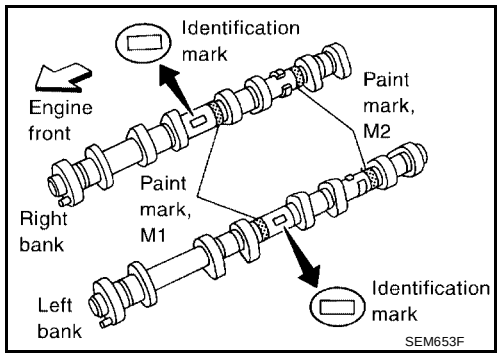

Bank	INT/EXH	ID mark	Drill mark	Paint marks	
				M1	M2
RH	INT	RE	Yes	Yes	No
	EXH	RE	No	No	Yes
LH	INT	LH	Yes	Yes	No
	EXH	LH	No	No	Yes

   - Position the camshafts:
     RH exhaust camshaft dowel pin at about 10 o'clock.
     LH exhaust camshaft dowel pin at about 2 o'clock.

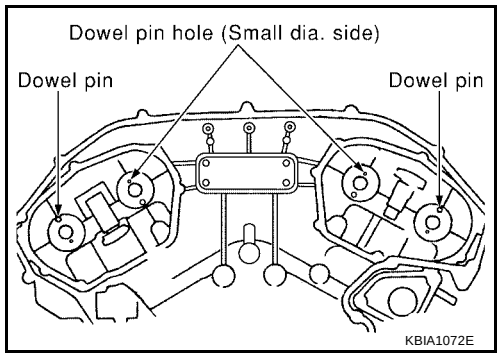

7. Before installing camshaft brackets, apply sealant to mating surface of No. 1 camshaft bracket.
   - **Use Genuine Silicone RTV Sealant, or equivalent. Refer to GI-45, "RECOMMENDED CHEMICAL PRODUCTS AND SEALANTS" .**

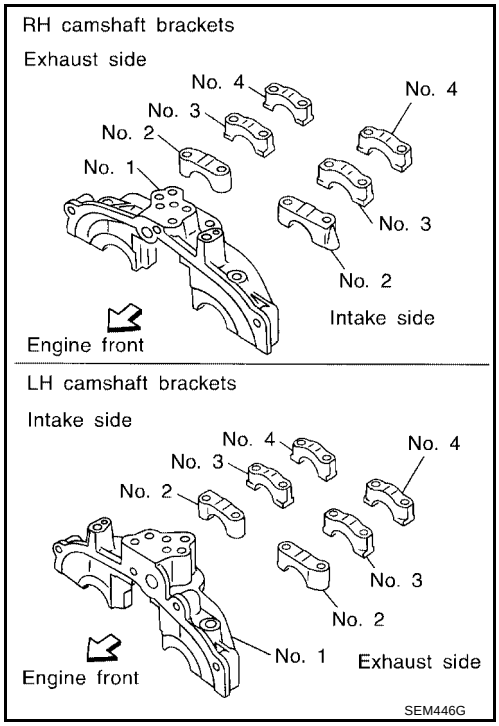

   - Before installation, wipe off any protruding sealant.
   - Refer to EM-110, "LIQUID GASKET APPLICATION PROCEDURE" .

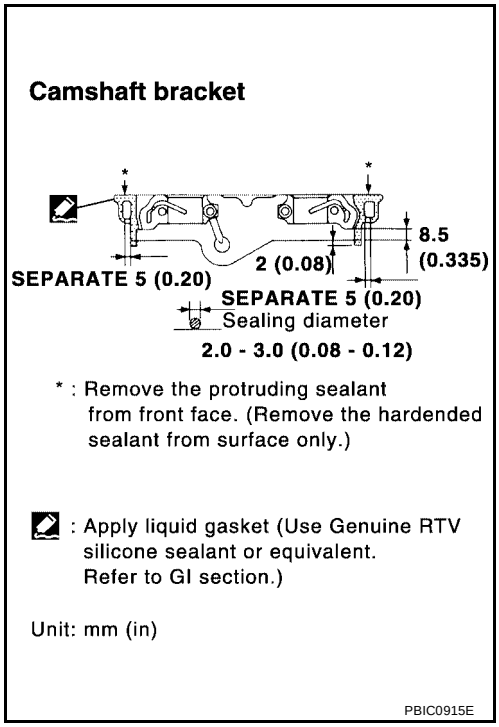

   - Install camshaft brackets in their original positions and direction. Align the stamp marks as shown.
   - **If checking and adjusting any part of valve assembly or camshaft, check valve clearance according to the reference data. Refer to EM-191, "Valve Clearance" .**

Valve clearance (cold) Intake	**: 0.26 - 0.34 mm (0.010 - 0.013 in)**
Valve clearance (cold) Exhaust	**: 0.29 - 0.37 mm (0.011 - 0.015 in)**

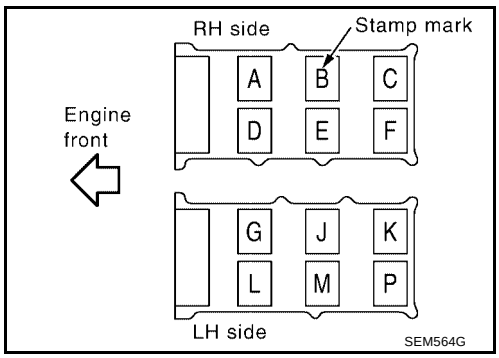

- Tighten the camshaft brackets in the three steps, in numerical order as shown.

1	1.96 N·m (0.2 kg-m, 17 in-lb)	Tighten No.s 7 to 10, then tighten 1 to 6 in order as shown.
2	5.88 N·m (0.6 kg-m, 52 in-lb)	Tighten in numerical order as shown.
3	9.02 - 11.8 N·m (0.92 - 1.20 kg-m, 79.9 - 104.2 in-lb)	Tighten No. 1 -6 in the numerical order as shown.

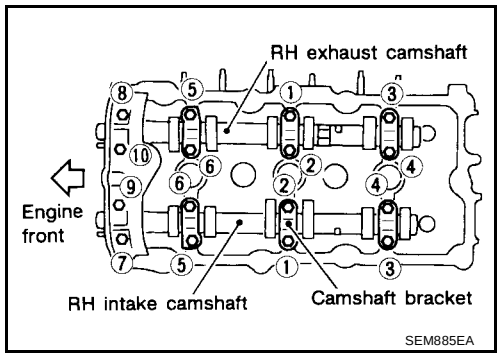

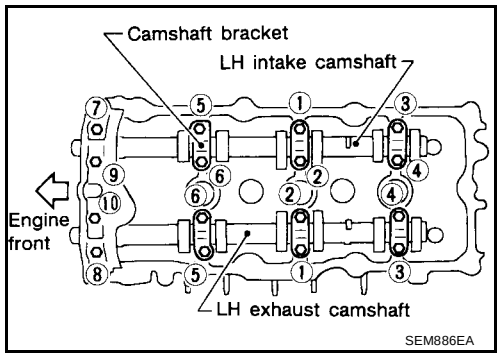

8. Measure difference in levels between front end faces of No. 1 camshaft bracket and cylinder head.

   Standard : – 0.14 (– 0.0055 in)

   - If measurement is outside the specified range, re-install camshaft and camshaft bracket.

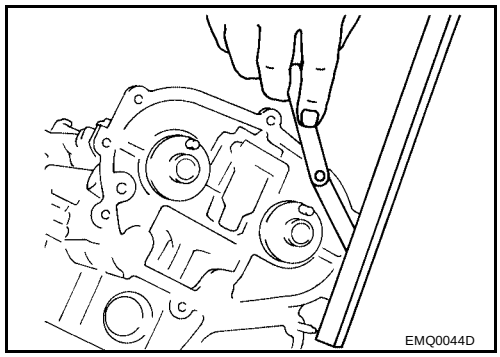

9. Install the IVT control solenoid valves with new gaskets.

   IVT control solenoid valve bolts : 10 - 12 N·m (1.0 - 1.3 kg-m, 87 - 112 in-lb)

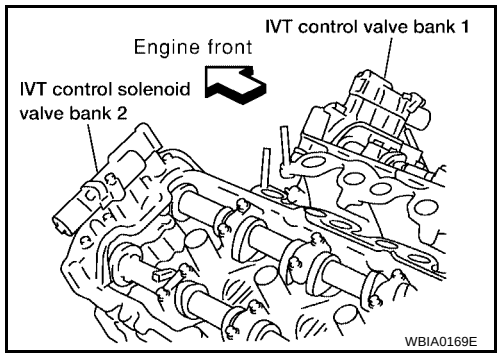

10. If necessary, install camshaft position sensor (PHASE) (RH and LH bank.)
11. Install the fuel rail and injectors. Refer to EM-147, "Removal and Installation" .
12. Install the timing chains. Refer to EM-172, "Installation" .

INSPECTION AFTER REMOVAL

Camshaft Visual Check

Check camshaft for scratches, seizure and wear. Replace if necessary.

Camshaft Runout

1. Put V-block on precise flat bed and support No. 2 and No. 4 journal of camshaft as shown.
2. Set dial gauges vertically to No. 3 journal as shown.
3. Turn camshaft in one direction slowly by hand, measure the camshaft runout on the dial gauges.
   - Runout is the largest indicator reading after one full revolution.

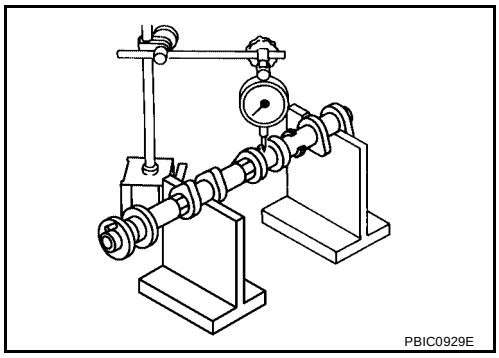

Camshaft Runout	
Standard	**: Less than 0.02 mm (0.0008 in)**
Limit	**: 0.05 mm (0.0020 in)**

4. If actual runout exceeds the limit, replace the camshaft.

Camshaft Cam Lobe Height

1. Measure camshaft cam lobe height as shown. Refer to EM-251, "CAMSHAFT AND CAMSHAFT BEARING" .
2. If wear has reduced the lobe height below specifications, replace the camshaft.

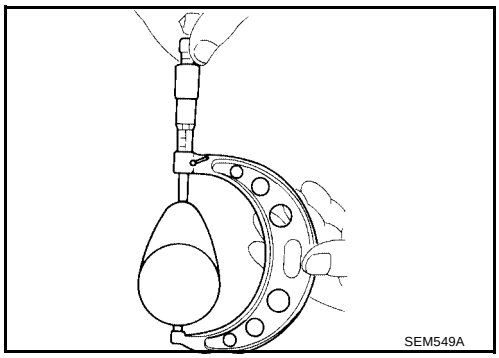

Camshaft Journal Clearance

Outer Diameter of Camshaft Journal

- Measure outer diameter of camshaft journal as shown.

Standard outer diameter, No.1	**: 25.935 - 25.955 mm (1.0211 - 1.0218 in)**
Standard outer diameter, No.2, 3, 4	**: 23.445 - 23.465 mm (0.9230 - 0.9238 in)**

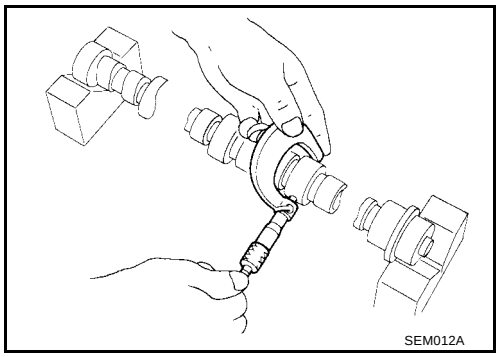

Inner Diameter of Camshaft Bracket

1. Tighten camshaft bracket bolt with specified torque.
2. Using inside micrometer, measure inner diameter "A" of camshaft bearing.

Standard inner diameter No.1	**: 26.000 - 26.021 mm (1.0236 - 1.0244 in)**
Standard inner diameter No.2, 3, 4	**: 23.500 - 23.521 mm (0.9252 - 0.9260 in)**

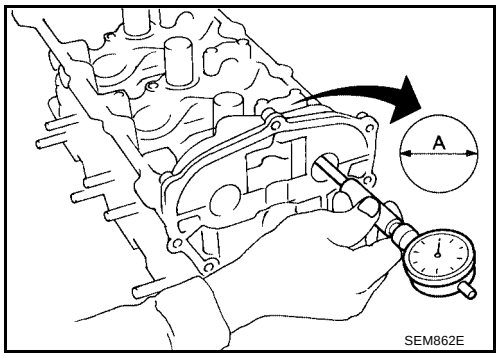

Calculation of Camshaft Journal Clearance

(Journal clearance) = (inner diameter of camshaft bracket) – (outer diameter of camshaft journal)

Standard No.1	**: 0.045 - 0.086 mm (0.0018 - 0.0034 in)**
Standard No.2, 3, 4	**: 0.035 - 0.076 mm (0.0014 - 0.0030 in)**
Limit	**: 0.15 mm (0.0059 in)**

- When out of the specified range, replace either or both camshaft and cylinder head.

NOTICE:
Inner diameter of camshaft bracket is manufactured together with cylinder head. Replace the whole cylinder head assembly.

Camshaft End Play

1. Install the camshaft in the cylinder head.
2. Install dial gauge in thrust direction on front end of camshaft. Measure end play when camshaft is moved forward/backward (in direction to axis) as shown.

Standard	**: 0.115 - 0.188 mm (0.0045 - 0.0074 in)**
Limit	**: 0.24 mm (0.0094 in)**

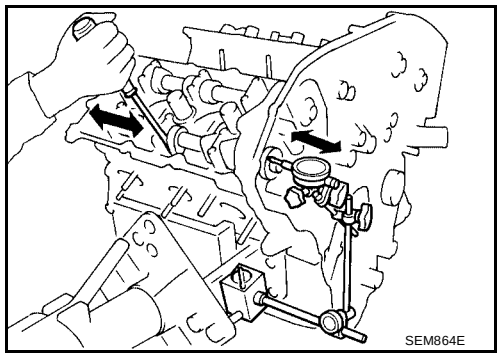

- If out of the specified range, replace with new camshaft and measure again.
- If out of the specified range again, replace with new cylinder head.

Camshaft Sprocket Runout

1. Put V-block on precise flat bed and support No. 2 and No. 4 journal of camshaft as shown.
2. Install camshaft sprocket on camshaft.
3. Measure camshaft sprocket runout.

Runout	**: Less than 0.15 mm (0.0059 in)**

4. If sprocket runout exceeds the limit, replace camshaft sprocket.

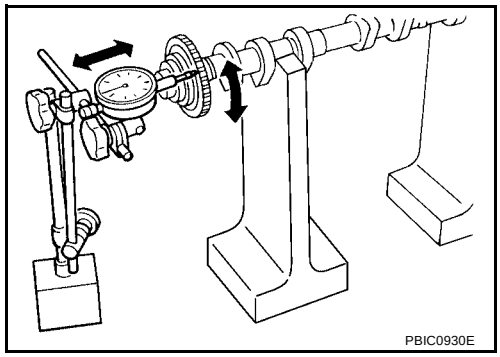

Valve Lifter

- Check if the surface of the valve lifter has any excessive wear or cracks, replace as necessary.

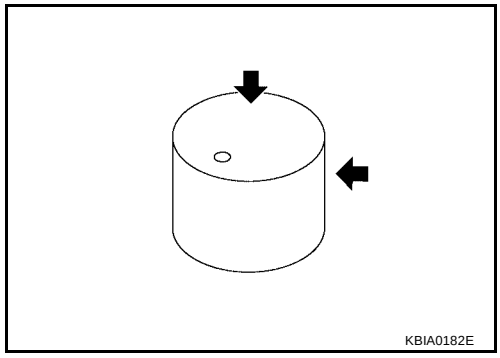

Valve Lifter Clearance

Outer Diameter of Valve Lifter

- Measure the outer diameter of the valve lifter. Refer to EM-248, "Valve Lifter" .
- If out of the specified range, replace the valve lifter.

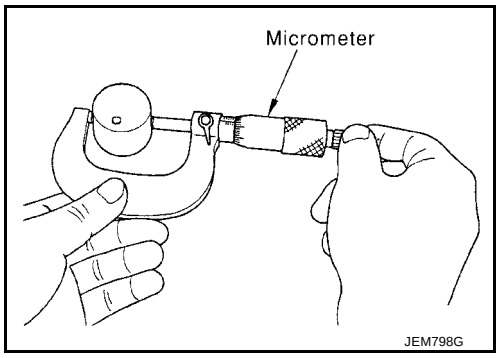

Valve Lifter Bore Diameter

- Using inside micrometer, measure diameter of valve lifter bore of cylinder head. Refer to EM-248, "Valve Lifter" .
- If out of the specified range, replace the cylinder head assembly.

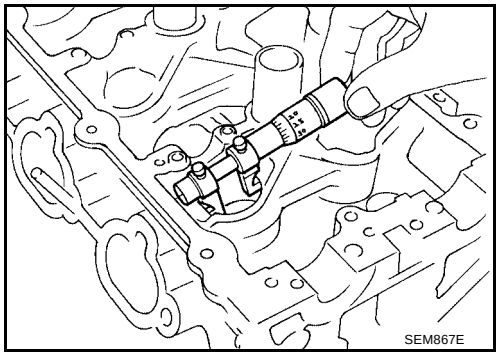

Calculation of Valve Lifter Clearance

- (Valve lifter clearance) = (hole diameter for valve lifter) – (outer diameter of valve lifter) Refer to EM-248, "Valve Lifter" .
- If out of specified range, replace either or both valve lifter and cylinder head assembly.

Inspection after Installation

EBS00M8E

INSPECTION OF CAMSHAFT SPROCKET (INT) OIL GROOVE

CAUTION:

- **Perform this inspection only when DTC P0011 is detected in self-diagnostic results of CONSULT II and it is directed according to inspection procedure of EC section. Refer to.**
- **Check when engine is cold so as to prevent burns from any splashing engine oil.**

1. Check engine oil level. Refer to LU-20, "OIL LEVEL" .
2. Perform the following procedure so as to prevent the engine from being unintentionally started while checking.

a. Release fuel pressure. Refer to EC-686, "FUEL PRESSURE RELEASE" .
b. Disconnect ignition coil and injector harness connectors if practical.

3. Remove IVT control solenoid valve.
4. Crank engine, and then make sure that engine oil comes out from IVT control cover oil hole. End cranking after checking.

   WARNING:
   Be careful not to touch rotating parts (drive belts, idler pulley, and crankshaft pulley, etc.).

   CAUTION:
   - **Engine oil may squirt from IVT control solenoid valve installation hole during cranking. Use a shop cloth to prevent engine oil from splashing on worker, engine components and vehicle.**

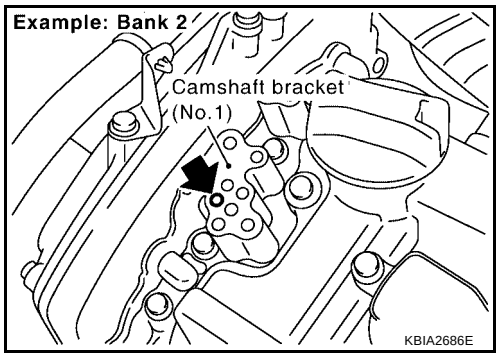

- **Do not allow engine oil to get on rubber components such as drive belts or engine mount insulators. Immediately wipe off any splashed engine oil.**

5. Clean oil groove between oil strainer and IVT control solenoid valve if engine oil does not come out from IVT control cover oil hole.
6. Remove components between IVT control solenoid valve and camshaft sprocket (INT), and then check each oil groove for clogging.
   - Clean oil groove if necessary.
7. After inspection, installation of the remaining components is in the reverse order of removal.

Valve Clearance

EBS00J66

CHECKING

- Perform inspection as follows after removal, installation or replacement of camshaft or valve related parts, or if there is unusual engine conditions regarding valve clearance.

Check valve clearance while engine is cold and not running.

1. Remove the air duct with air cleaner case, collectors, hoses, wires, harnesses, and connectors.
2. Remove the intake manifold collectors.
3. Remove the ignition coils and spark plugs.
4. Remove the rocker covers.

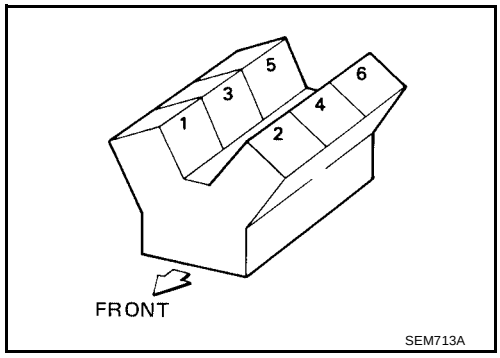

5. Set No.1 cylinder at TDC on its compression stroke.
   - Align pointer with TDC mark on crankshaft pulley.

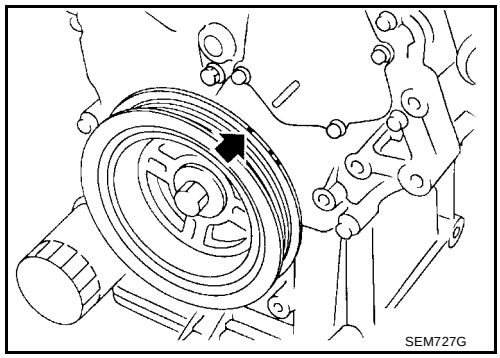

   - Check that the valve lifters on No.1 cylinder are loose and valve lifters on No.4 are tight. If not, turn the crankshaft one full revolution (360°) and align as shown.

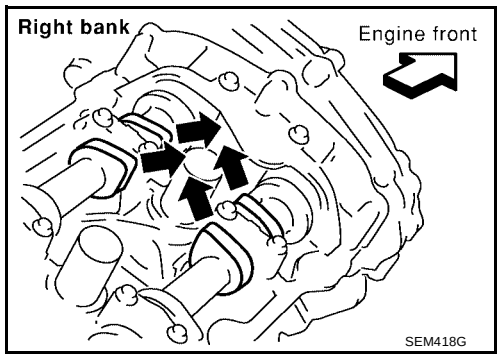

6. Check only the valves as shown.

Crank Position	Valve No. 1	Valve No. 2	Valve No. 3	Valve No. 6
No. 1 TDC	Intake	Exhaust	Exhaust	Intake

- Using a feeler gauge, measure the clearance between the valve lifter and camshaft.
- Record any valve clearance measurements which are out of specification. They will be used later to determine the required replacement lifter size.
  Valve Clearance for Checking (cold)

  Intake : 0.26 - 0.34 mm (0.010 - 0.013 in)
  Exhaust : 0.29 - 0.37 mm (0.011 - 0.015 in)

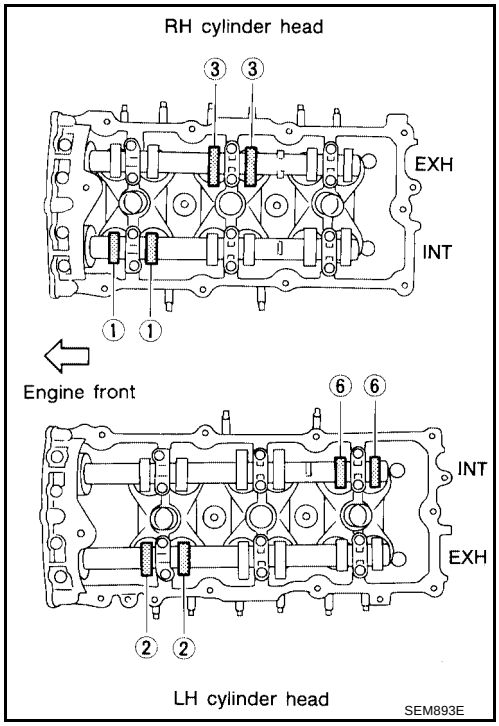

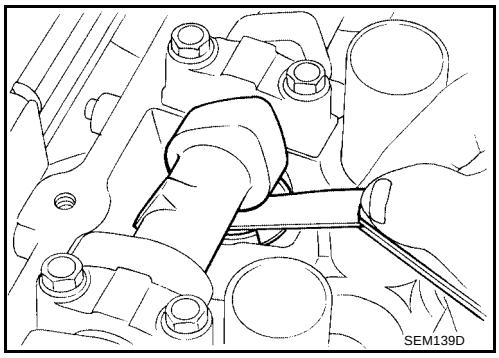

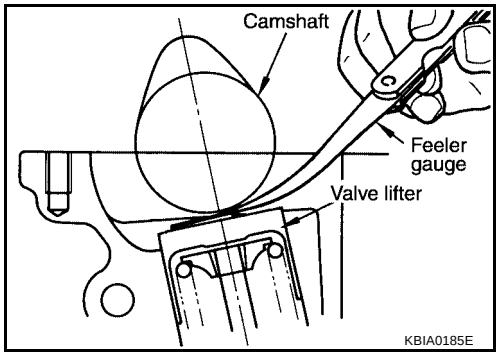

7. Turn crankshaft 240°.
8. Set No.3 cylinder at TDC on its compression stroke.

9. Check only those valves as shown.

Crank Position	Valve No. 2	Valve No. 3	Valve No. 4	Valve No. 5
No. 3 TDC	Intake	Intake	Exhaust	Exhaust

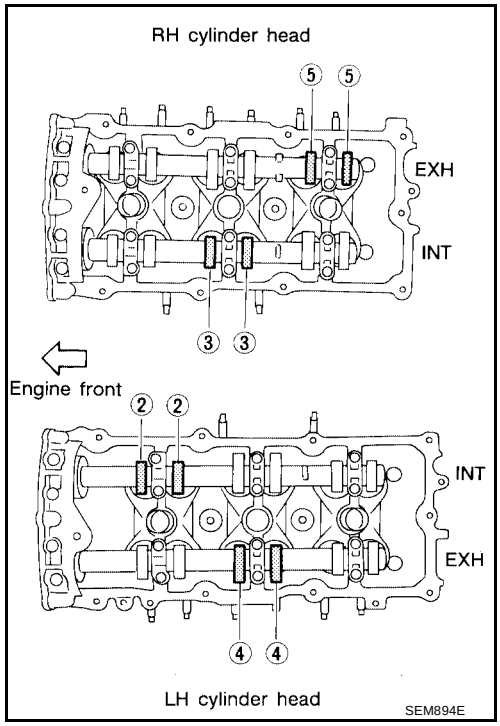

10. Turn the crankshaft 240° and align as above.
11. Set No.5 cylinder at TDC on its compression stroke.
12. Check only those valves as shown.

Crank Position	Valve No. 1	Valve No. 4	Valve No. 5	Valve No. 6
No. 5 TDC	Exhaust	Intake	Intake	Exhaust

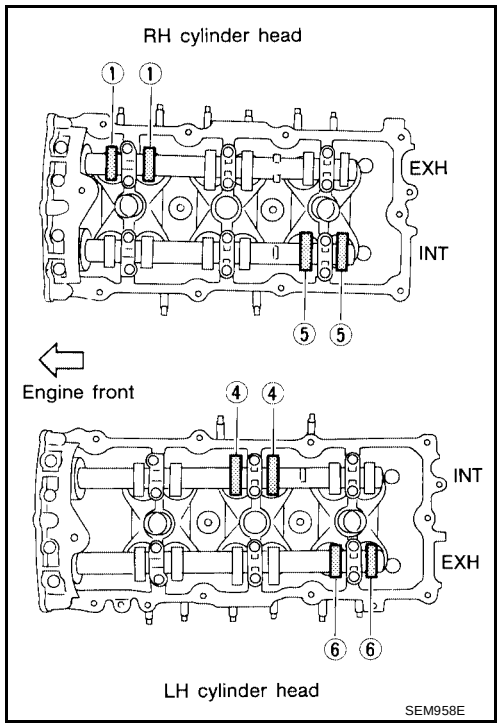

13. If all valve clearances are within specification, install the following components. If the valve clearances are out of specification, adjust the valve clearances.
    - Intake manifold collectors
    - Rocker covers
    - All spark plugs
    - All ignition coils

VALVE ADJUSTING

CAUTION:

Adjust valve clearance while engine is cold.

NOTE:

- Perform adjustment by selecting the correct head thickness of the valve lifter (adjusting shims are not used).
- The specified valve lifter thickness is the dimension at normal temperatures. Ignore dimensional differences caused by temperature. Use specifications for hot engine condition to confirm valve clearances.

1. Remove the camshaft.
2. Remove the valve lifter that was measured as being outside the standard specifications.
3. Measure the center thickness of the removed lifter with a micrometer, as shown.

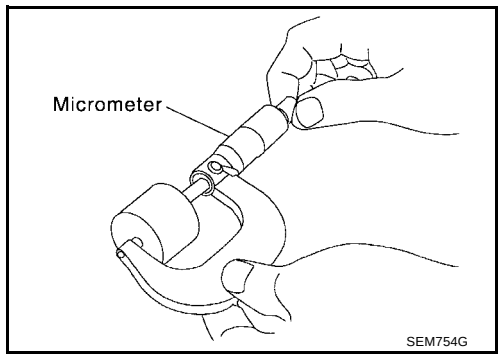

4. Use the equation below to calculate the replacement valve lifter thickness.
   Valve lifter thickness calculation equation: t = t1 + (C1 - C2)
   t = thickness of the replacement lifter
   t1 = thickness of the removed lifter
   C1 = measured valve clearance
   C2 = standard valve clearance
   - The thickness of the new valve lifter can be identified by the stamp mark on the reverse side (inside the lifter).
   - Available thickness of the valve lifter (factory setting):
     7.88 - 8.36 mm (0.3102 - 0.3291 in), in 0.02 mm (0.0008 in) increments, in 25 sizes (intake / exhaust). Refer to EM-248, "Valve Lifter" .
     Value lifter thickness:
     Intake: 0.30 mm (0.012 in)
     Exhaust: 0.33 mm (0.013 in)

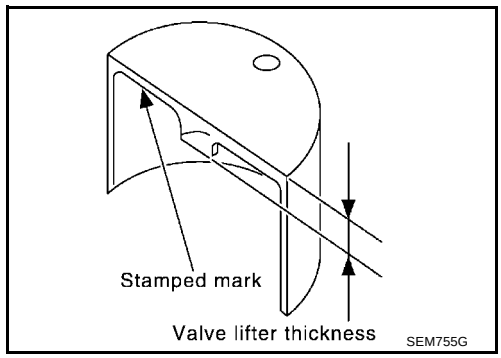

5. Install the selected replacement valve lifter.
6. Install the camshaft.
7. Rotate the crankshaft a few turns by hand.
8. Confirm that the valve clearances are within specification.
9. After the engine has been run to full operating temperature, confirm that the valve clearances are within specification.

Valve Clearance	Cold	Hot* (reference data)
Intake	0.26 - 0.34 mm (0.010 - 0.013 in)	0.304 - 0.416 mm (0.012 - 0.016 in)
Exhaust	0.29 - 0.37 mm (0.011 - 0.015 in)	0.308 - 0.432 mm (0.012 - 0.017 in)

* Approximately 80°C (176°F)

OIL SEAL

PFP:00100

Removal and Installation of Valve Oil Seal

EBS00MXS

REMOVAL

1. Remove camshaft relating to valve oil seal to be removed. Refer to EM-183, "REMOVAL" .
2. Remove valve lifters. Refer to EM-183, "REMOVAL" .
3. Remove valve collet, valve spring retainer and valve spring using Tool.

   CAUTION:
   When working, take care not to damage valve lifter holes.

   Tool numbers : KV10116200 (J-26336-B)
   : KV10115900 (J-26336-20)
   : KV10109230 (—)

   - Compress valve spring using Tool attachment, adapter. Remove valve collet with magnet hand.

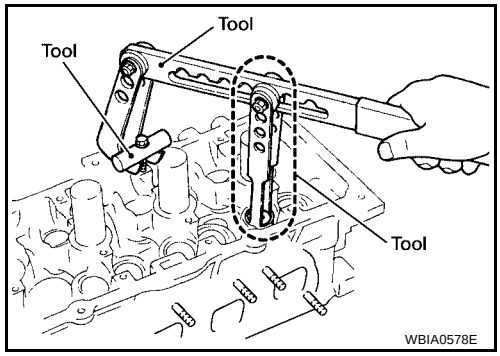

4. Remove valve oil seal using Tool.

   Tool number : KV10107902 (J-38959)

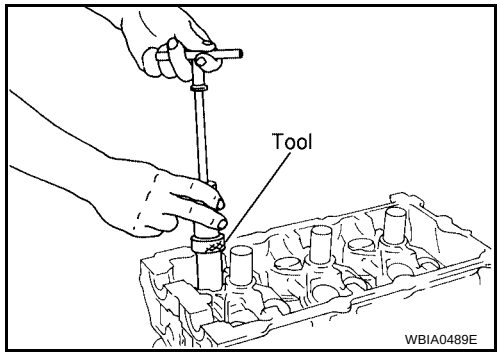

5. Turn crankshaft until the cylinder requiring new oil seals is at TDC. This will prevent valve from dropping into cylinder.

CAUTION:
When rotating crankshaft, be careful to avoid scarring the front cover with the timing chain.

INSTALLATION

1. Apply new engine oil to new valve oil seal joint surface and seal lip.
2. Press in valve oil seal to height "H" using Tool to specified height.

   Tool number : — (J-39386)

   NOTE:
   Dimension "H": height measured before valve spring seat installation.

   Intake and exhaust : 14.3 - 14.9 mm (0.563 - 0.587 in)

3. Installation of the remaining components is in the reverse order of removal.

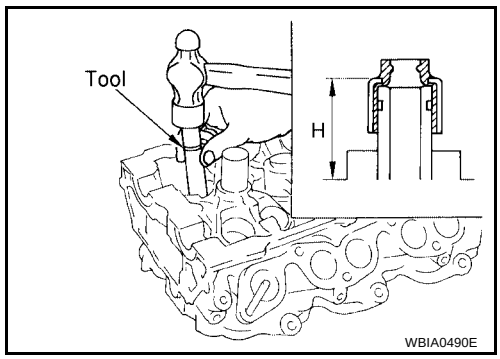

Removal and Installation of Front Oil Seal

EBS00J68

REMOVAL

1. Remove the following parts:
   - Engine under cover
   - Drive belts. Refer to EM-119, "DRIVE BELTS" .
   - Radiator fan. Refer to CO-34, "RADIATOR" .
2. Remove the crankshaft pulley as follows:

a. Remove the starter motor. Refer to SC-17, "Removal and Installation" .

b. Set the ring gear stopper using the bolt hole.

Tool number : KV10117700 (J-44716)

CAUTION:
Do not damage the ring gear teeth, or the signal plate teeth behind the ring gear when setting the stopper.

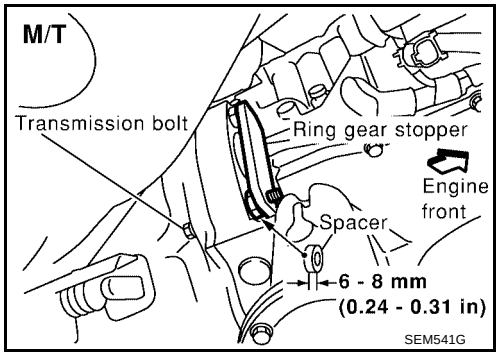

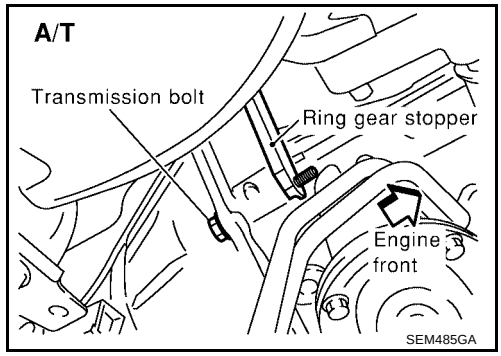

c. Loosen crankshaft pulley bolt using pulley holder and locate bolt seating surface at 10 mm (0.39 in) from its original position.

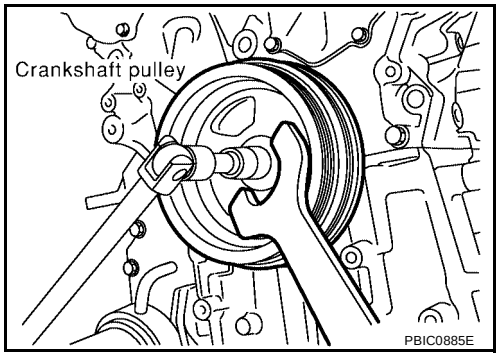

d. Position a pulley puller at recess hole of crankshaft pulley to remove crankshaft pulley.

CAUTION:
Do not use a puller claw on crankshaft pulley periphery.

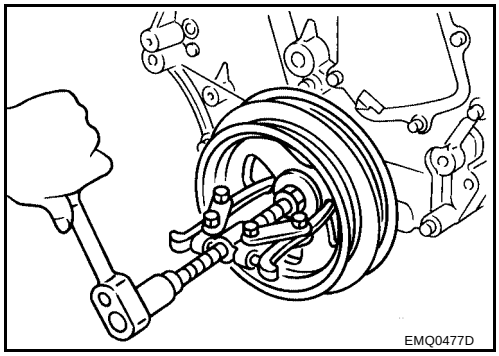

3. Remove front oil seal from front cover.

CAUTION:
Be careful not to damage front cover or crankshaft.

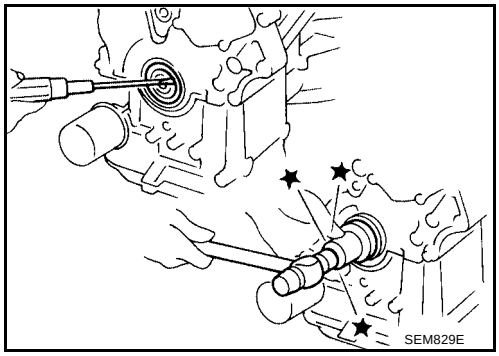

INSTALLATION

1. Apply new engine oil to new oil seal and install it flush with front of mounting surface using a suitable tool.
   - Install new oil seal in the direction as shown.

   Suitable drift

   Outer diameter : 59 mm (2.32 in)

   Inner diameter : 49 mm (1.93 in)

   CAUTION:
   Press fit straight and avoid causing burrs or tilting the oil seal.

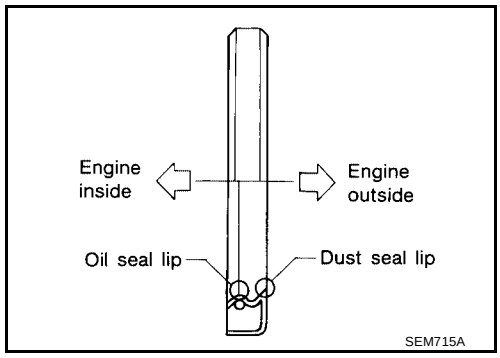

2. Install crankshaft pulley and tighten the bolt in two steps.
   - Lubricate thread and seat surface of the bolt with new engine oil.
   - For the second step of angle tightening. Use Tool.

   Step 1 : 44 N·m (4.5 kg-m, 32 ft-lb)

   Step 2 : 84° - 90° degrees clockwise

   Tool number : KV10112100 (BT-8653-A)

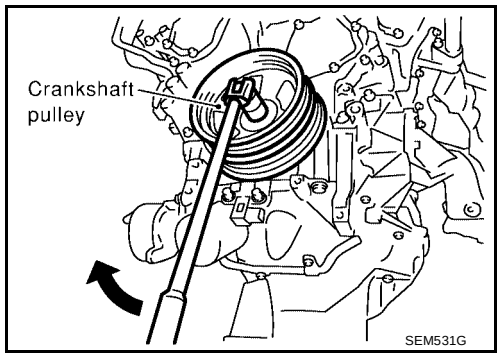

3. Remove Tool.

   Tool number : KV10117700 (J-44716)

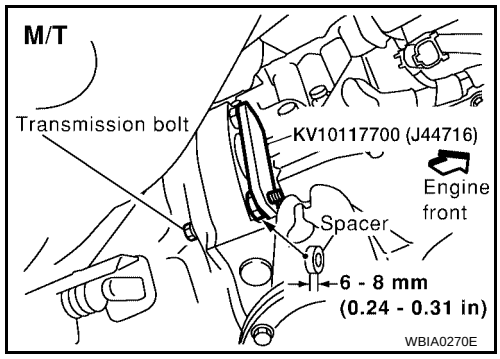

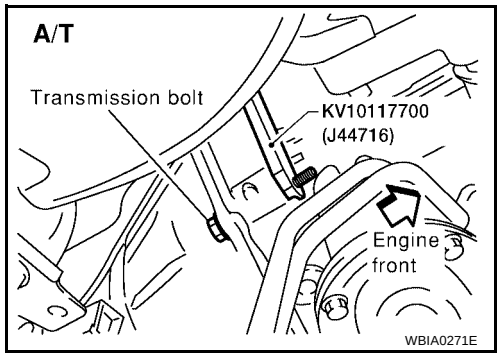

4. Installation of the remaining components is in reverse order of removal.

Removal and Installation of Rear Oil Seal

EBS00J69

REMOVAL

1. Remove the transaxle. Refer to MT-80, "Removal and Installation" (M/T), AT-275, "REMOVAL AND INSTALLATION" (RE4F04B), or AT-631, "REMOVAL AND INSTALLATION" (RE5F22A).
2. Remove flywheel (M/T) or drive plate (A/T).
3. Remove rear oil seal with a suitable tool.

   CAUTION:
   Be careful not to damage crankshaft and cylinder block.

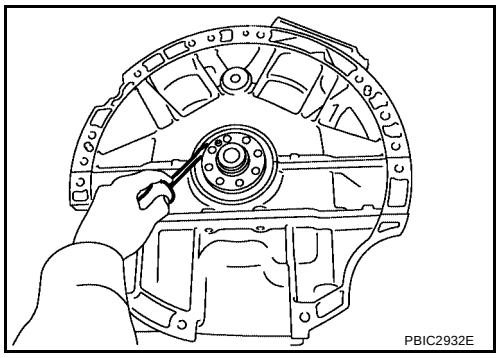

INSTALLATION

1. Apply new engine oil to new rear oil seal joint surface and seal lip.
2. Install rear oil seal so that each seal lip is oriented as shown.

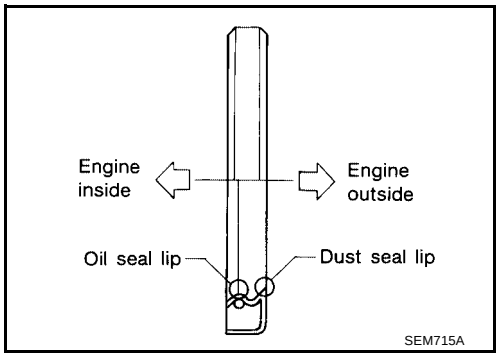

- Press in rear oil seal to the position as shown.

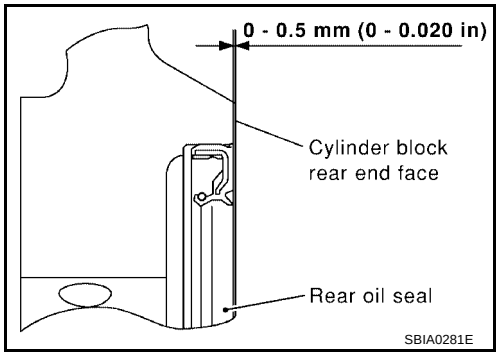

- Install new rear oil seal using Tool.

  Tool number : — (J-47128)

  CAUTION:
  - **Be careful not to damage crankshaft and cylinder block.**
  - **Press-fit oil seal straight to avoid causing burrs or tilting.**
  - **Do not touch grease applied onto oil seal lip.**

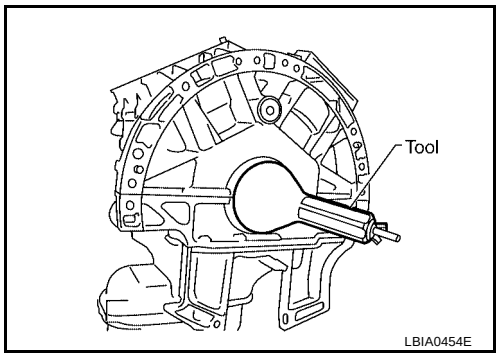

3. Installation of the remaining components is in the reverse order of removal.

CAUTION:

- **When replacing an engine or transmission you must make sure the dowels are installed correctly during re-assembly.**
- **Improper alignment caused by missing dowels may cause vibration, oil leaks or breakage of drivetrain components.**

CYLINDER HEAD

PFP:11041

On-Vehicle Service

EBS00J6A

CHECKING COMPRESSION PRESSURE

1. Run the engine until it reaches normal operating temperature.
2. Turn the ignition switch to OFF.
3. Release fuel pressure and leave the fuel pump electrically disconnected.
   Refer to EC-686, "FUEL PRESSURE RELEASE" .
4. Remove all six spark plugs.
   Refer to EM-145, "Removal and Installation" .
5. Attach a compression tester to No. 1 cylinder.
6. Depress accelerator pedal fully to keep the electric throttle control actuator butterfly-valve wide open to maximize air intake flow.
7. Crank the engine and record the highest gauge indication.
8. Repeat the measurement on each cylinder (steps 5 - 7).
   - **Always use a fully-charged battery to obtain specified engine speed.**

Use compressor tester whose end (rubber portion) is less than 20 mm (0.79 in) dia. Otherwise, it may be caught by cylinder head during removal.

SEM387C

Unit: kPa (kg/cm^2 , psi)/rpm

Standard	Minimum	Difference limit between cylinders
1,275 (13.0, 185)/300	981 (10.0, 142)/300	98 (1.0, 14)/300

9. If compression in one or more cylinders is low:

a. Pour a small amount of engine oil into cylinders through the spark plug holes.

b. Retest compression (steps 5 - 8).

- **If adding oil helps raise compression pressure, then the piston rings may be worn or damaged. If so, replace piston rings after checking piston.**
- **If the pressure stays low, a valve may be sticking or is seating improperly. Inspect and repair the valve and/or valve seat. Refer to EM-247, "VALVE" . If the valve and/or valve seat is damaged excessively, replace as necessary.**
- **If compression stays low in two or more cylinders that are next to each other:**

– The cylinder head gasket may be leaking.

– Both cylinders may have valve component damage. Inspect and repair as necessary.

Removal and Installation

EBS00J6B

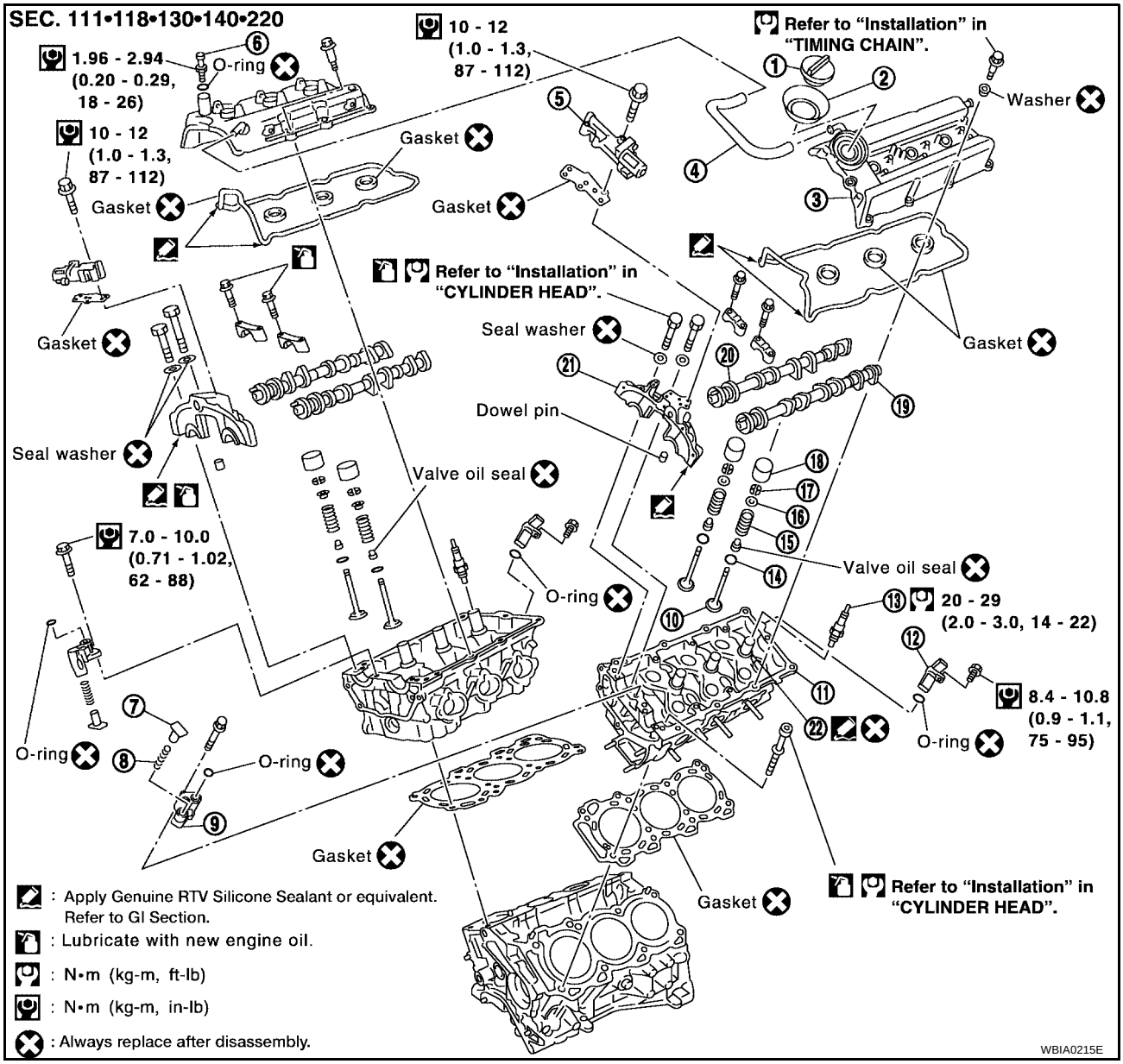

1. Oil filler cap	2. Oil catcher	3. Rocker cover
4. PCV hose	5. IVT control solenoid valve	6. PCV valve
7. Tensioner sleeve	8. Spring	9. Chain tensioner
10. Valve	11. Cylinder head	12. Camshaft position sensor (PHASE)
13. Spark plug	14. Valve spring seat	15. Valve spring
16. Valve spring retainer	17. Valve collet	18. Valve lifter
19. Camshaft (EXH)	20. Camshaft (INT)	21. Camshaft bracket
22. Spark plug tube		

REMOVAL

1. Remove the timing chains. Refer to EM-164, "Removal" .
2. Remove the fuel rail and injectors. Refer to EM-147, "Removal and Installation" .

3. Remove the intake manifold using power tool.
   - Loosen the bolts in the numerical order as shown.
4. Remove the coolant outlet housing.

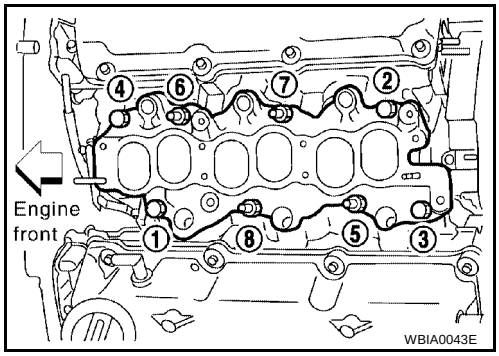

5. Remove rear timing chain case bolts using power tool.
   - Loosen the bolts in the numerical order as shown.

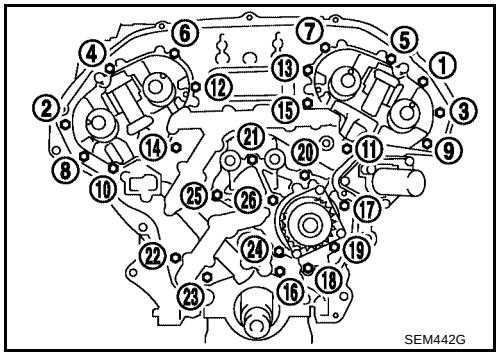

6. Remove rear timing chain case using Tool.

   Tool number : KV10111100 (J-37228)

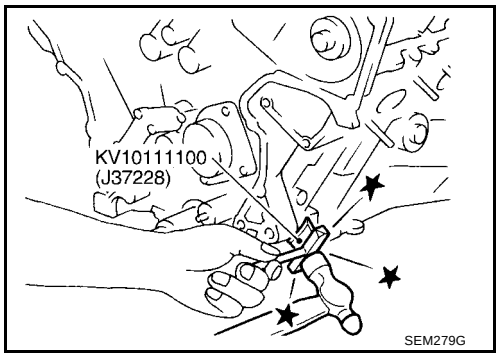

7. Remove the O-rings from the front of the cylinder heads.
   - Discard the O-rings and use new O-rings for installation.

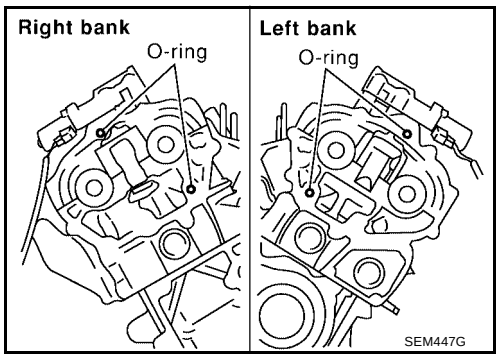

8. Remove the O-rings from the cylinder block.
   - Discard the O-rings and use new O-rings for installation.

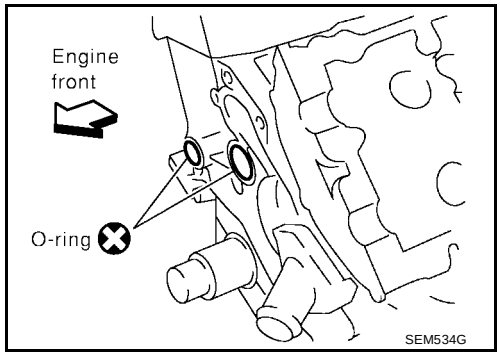

9. Remove the IVT control valves.
   - Discard the IVT control valve gaskets and use new gaskets for installation.

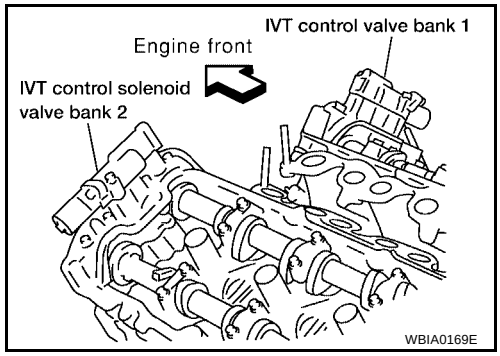

10. Remove the intake and exhaust camshafts and the camshaft brackets.
    - Mark the camshaft brackets so they are placed in the same position and direction for installation.
    - Equally loosen the camshaft bracket bolts in several steps in the numerical order as shown.

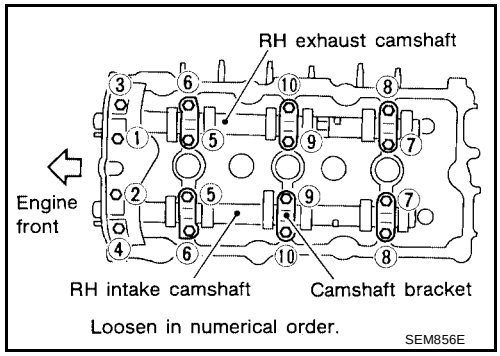

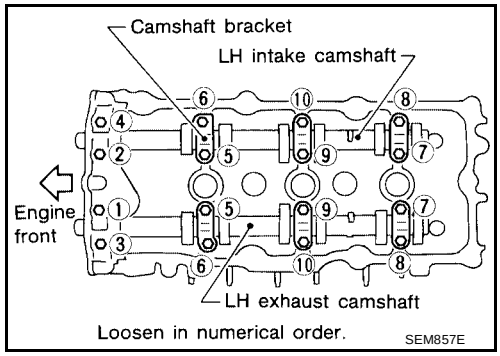

11. Remove the RH and LH cylinder head bolts, with power tool.
    - The bolts should be loosened gradually in three stages.
    - Loosen the bolts in the numerical order as shown.

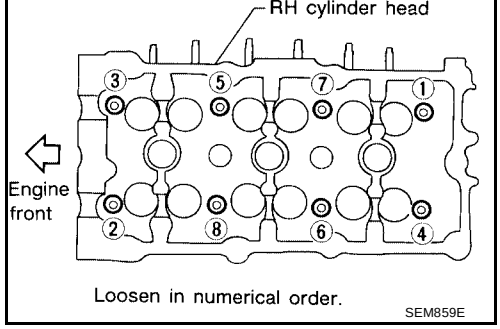

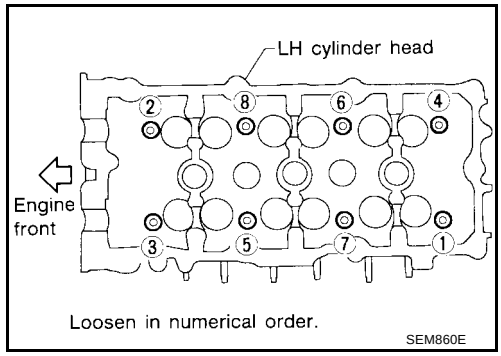

12. Remove cylinder heads and gaskets.
    - Discard the cylinder head gaskets and use new gaskets for installation.

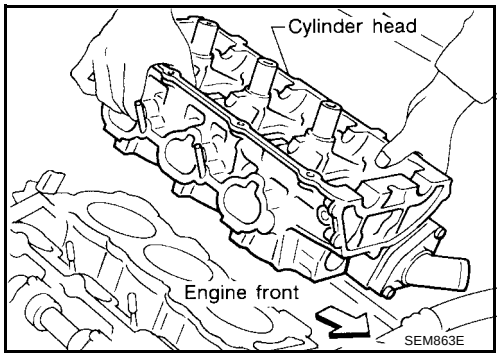

INSTALLATION

1. Before installing the rear timing chain case, remove the old Silicone RTV Sealant from mating surface using a scraper.
    - Also remove old sealant from mating surface of cylinder block.

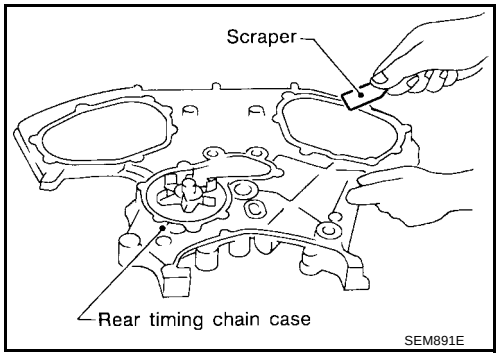

    - Remove the old Silicone RTV Sealant from the bolt hole and thread.

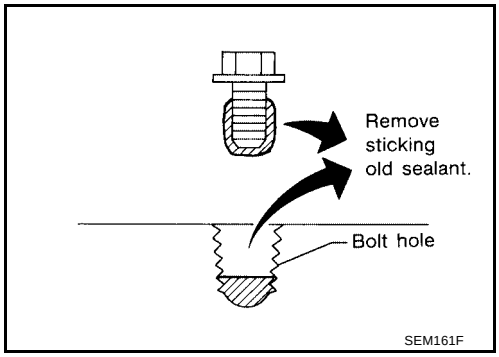

2. Before installing the front cam bracket, remove the old RTV Silicone Sealant from the mating surface using a scraper.
   - Do not scratch the mating surface.

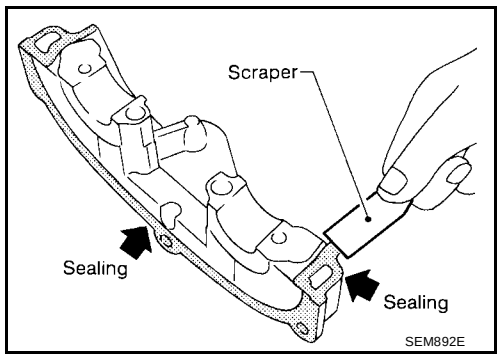

3. Turn the crankshaft until No. 1 piston is set at TDC on the compression stroke.
   - The crankshaft key should line up with the right bank cylinder center line as shown.

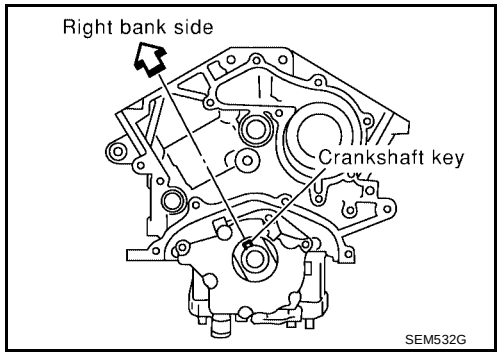

4. Install new gaskets on the cylinder heads.

   CAUTION:
   Do not rotate crankshaft and camshaft separately or valves will strike piston heads.

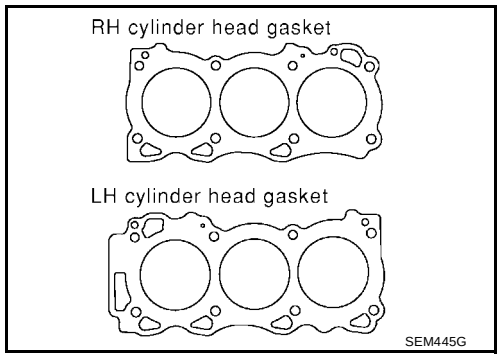

5. Inspect the cylinder head bolts before installing the cylinder heads.

   CAUTION:
   Cylinder head bolts are tightened by degree rotation tightening method. Whenever the size difference between d1 and d2 exceeds the limit, replace the bolts with new ones.

   Limit (d1 - d2) : 0.11 mm (0.0043 in)

   - **Lubricate threads and seat surfaces of the bolts with new engine oil.**

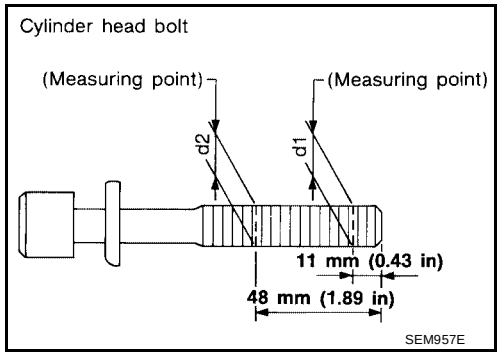

6. Install the cylinder heads on the cylinder block. Tighten the cylinder head bolts in the five stages in the numerical order as shown.

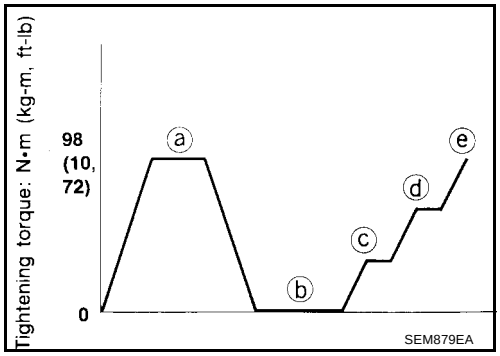

- **Tightening procedure:**

Cylinder head bolts

Step a : 98.1 N·m (10 kg-m, 72 ft-lb)

Step b :Loosen in the reverse order of tightening

Step c : 32.9 N·m (4.0 kg-m, 29 ft-lb)

Step d : 90° degrees rotation clockwise

Step e : 90° degrees rotation clockwise

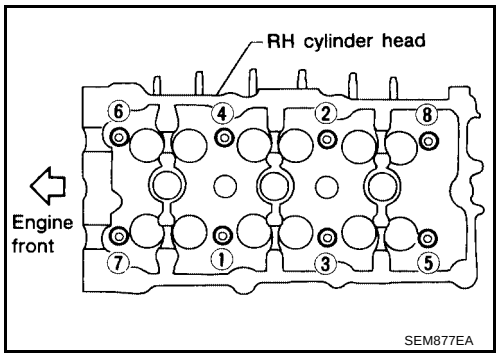

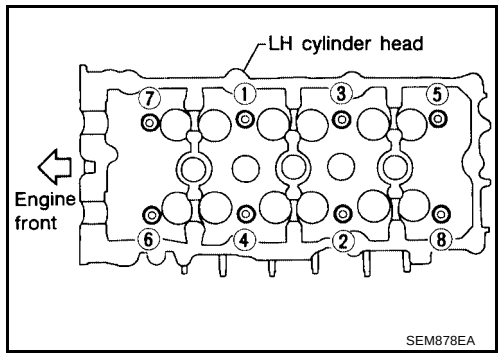

7. Install camshaft chain tensioners on both sides of cylinder head.

Camshaft chain tensioner bolts : 7 - 10 N·m (0.7 - 1.0 kg-m, 62 - 89 in-lb)

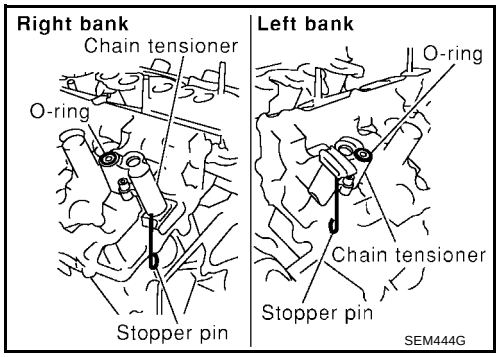

8. Install exhaust and intake camshafts and camshaft brackets.
   - **Intake camshaft has a drill mark on camshaft sprocket mounting flange.**

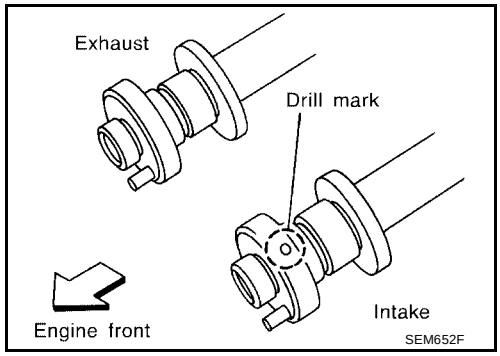

   - Follow your identification marks made during removal, or follow the identification marks that are present on the new camshaft components for proper placement.

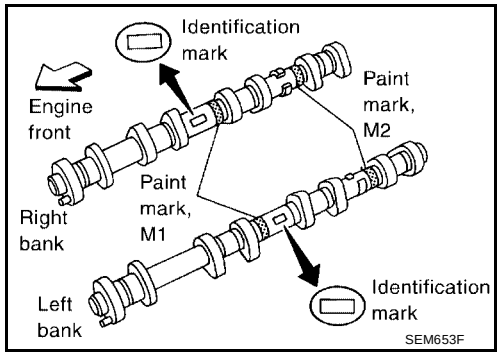

Bank	INT/EXH	ID mark	Drill mark	Paint marks	
				M1	M2
RH	INT	RE	Yes	Yes	No
	EXH	RE	No	No	Yes
LH	INT	LH	Yes	Yes	No
	EXH	LH	No	No	Yes

   - Position the camshafts:
     RH exhaust camshaft dowel pin at about 10 o'clock
     LH exhaust camshaft dowel pin at about 2 o'clock.

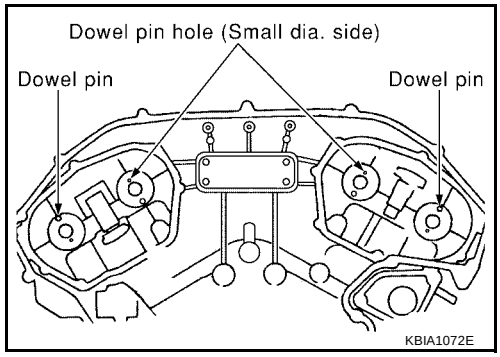

9. Before installing camshaft brackets, apply sealant to mating surface of No. 1 journal head.
   - Use Genuine RTV Silicone Sealant, or equivalent. Refer to GI-45, "RECOMMENDED CHEMICAL PRODUCTS AND SEALANTS" .
   - Refer to EM-163, "POSITION FOR APPLYING LIQUID GASKET" .

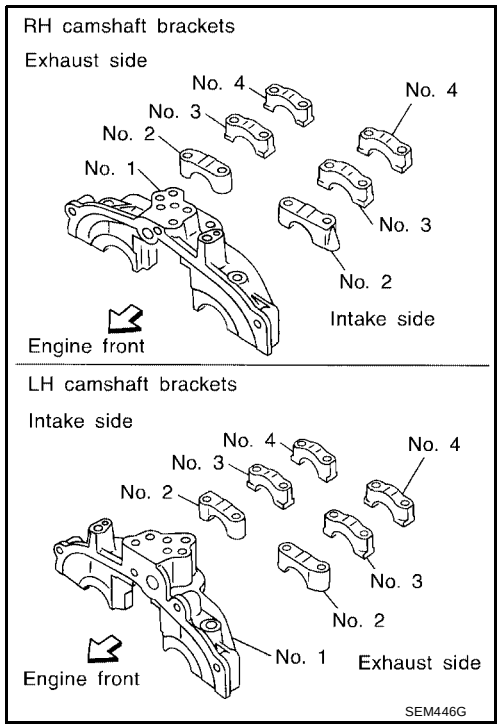

- Install camshaft brackets in their original positions and direction. Align the stamp marks as shown.
- If any part of valve assembly or camshaft is replaced, check and adjust the valve clearance. Refer to EM-191, "Valve Clearance" .

Valve clearance (cold) Intake	**: 0.26 - 0.34 mm (0.010 - 0.013 in)**
Valve clearance (cold) Exhaust	**: 0.29 - 0.37 mm (0.011 - 0.015 in)**

- Lubricate the threads and seat surfaces of the camshaft bracket bolts with new engine oil before installation.

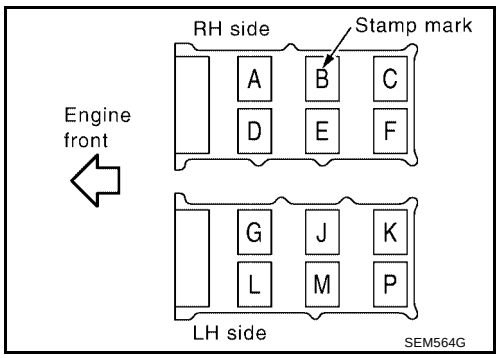

10. Tighten the camshaft brackets in the following three steps in the numerical order as shown.

1	**1.96 N·m (0.2 kg-m, 17 in-lb)**	**Tighten No.s 7 to 10, then tighten 1 to 6 in order as shown.**
2	**5.88 N·m (0.6 kg-m, 52 in-lb)**	**Tighten in numerical order as shown.**
3	**9.02 - 11.8 N·m (0.92 - 1.20 kg-m, 79.9 - 104.2 in-lb)**	**Tighten No. 1 -6 in the numerical order as shown.**

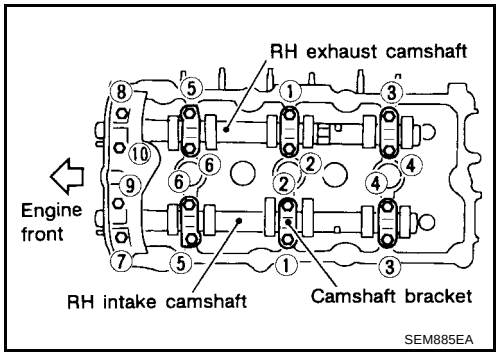

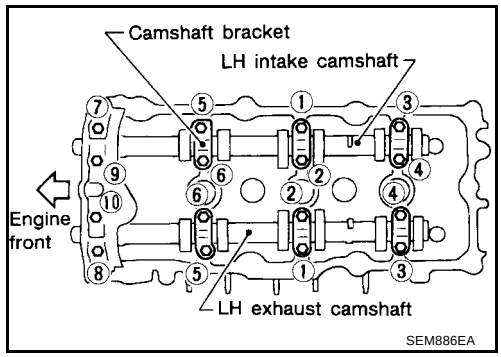

11. Install the IVT control solenoid valves with new gaskets.

IVT control solenoid valve bolts	**: 10 - 12 N·m (1.0 - 1.3 kg-m, 87 - 112 in-lb)**

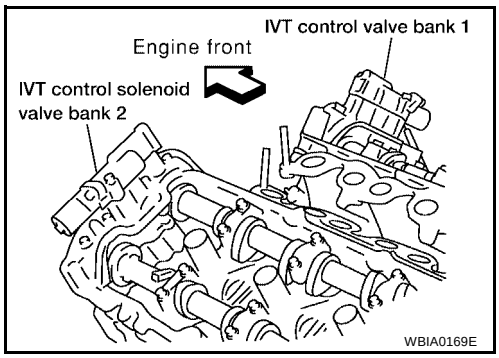

12. Install the new O-rings on the cylinder block.

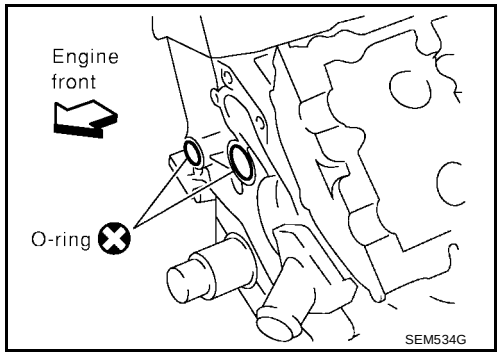

13. Install the new O-rings on the cylinder head.

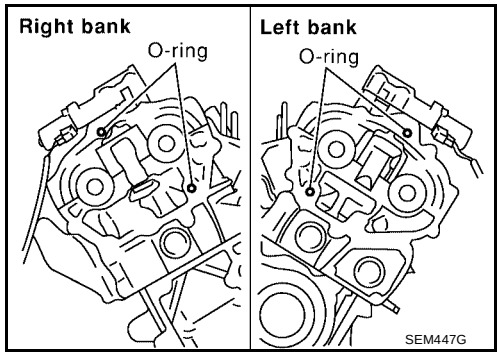

14. Apply sealant to the specified portion of the rear timing chain case. Refer to EM-110, "LIQUID GASKET APPLICATION PROCEDURE" .

- Use Genuine Silicone RTV Sealant, or equivalent. Refer to MA-12, "RECOMMENDED FLUIDS AND LUBRICANTS" .

Front timing chain case

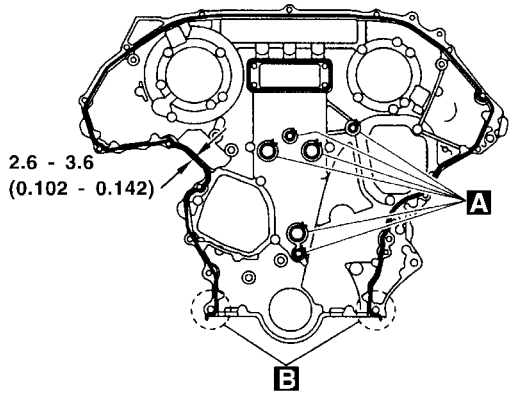

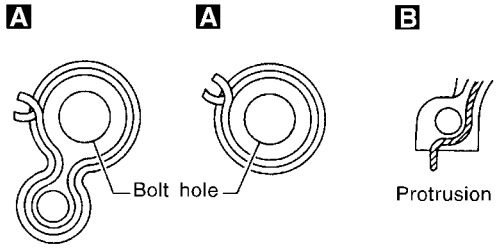

Sealant protrusion away from bolt hole

Rear timing chain case

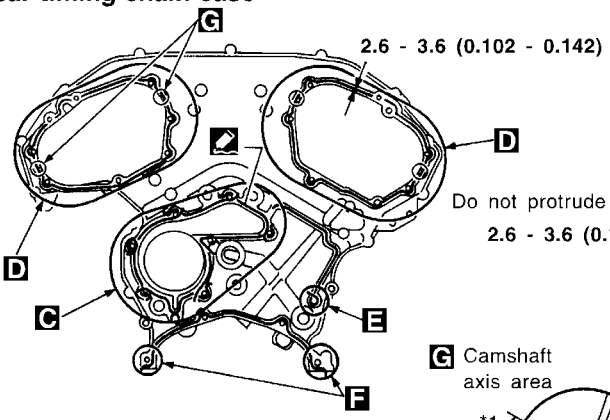

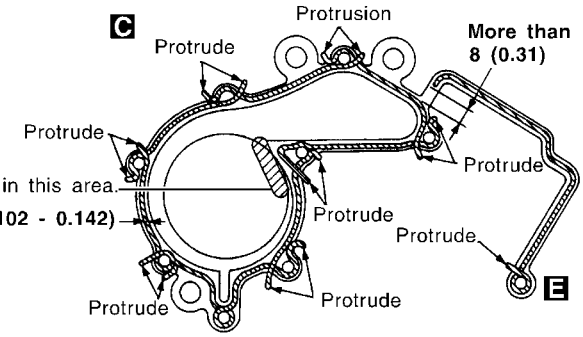

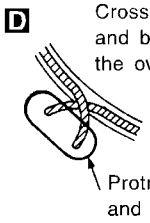

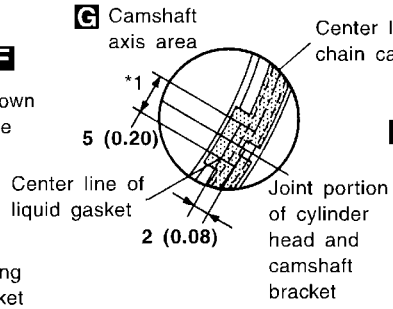

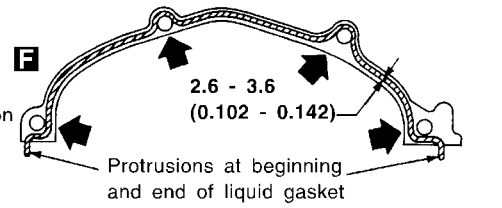

*1: Apply liquid gasket to the chamfered surface between camshaft bracket and cylinder head.

Camshaft bracket

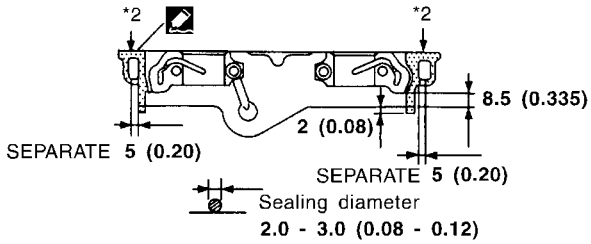

*2: Remove the protruding sealant from front face.
(Remove the hardened sealant from surface only.)

Unit: mm (in)

Rocker cover

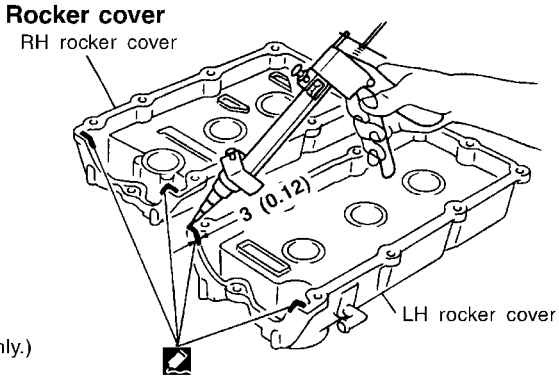

SEM411G

- **Before installation, wipe off the protruding sealant.**

15. Align rear timing chain case with dowel pins, then install on cylinder head and block.
16. Tighten rear chain case bolts in two stages.
a. Tighten bolts in numerical order as shown.
b. Retighten bolts in numerical order as shown.
17. Install the coolant outlet housing.

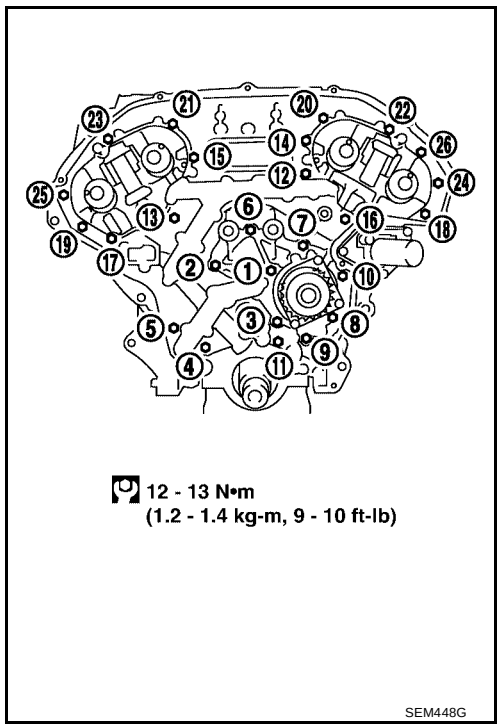

18. Install the intake manifold with a new gasket.
- Tighten the bolts in the numerical order as shown.

Step 1 : 5 - 10 N·m (0.5 - 1.0 kg-m, 44 - 86 in-lb)
Step 2 : 26 - 31 N·m (2.7 - 3.2 kg-m, 20 - 23 ft-lb)

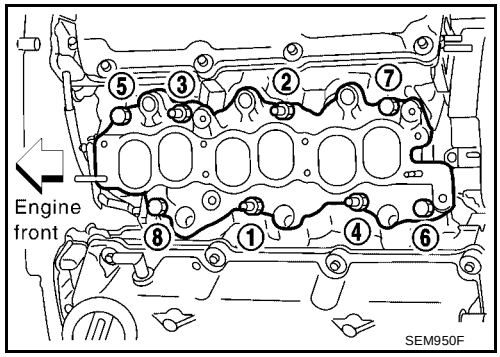

19. Install the fuel rail and injectors. Refer to EM-147, "Removal and Installation" .
20. Install the timing chains. Refer to EM-172, "Installation" .

Disassembly and Assembly

EBS00J6C

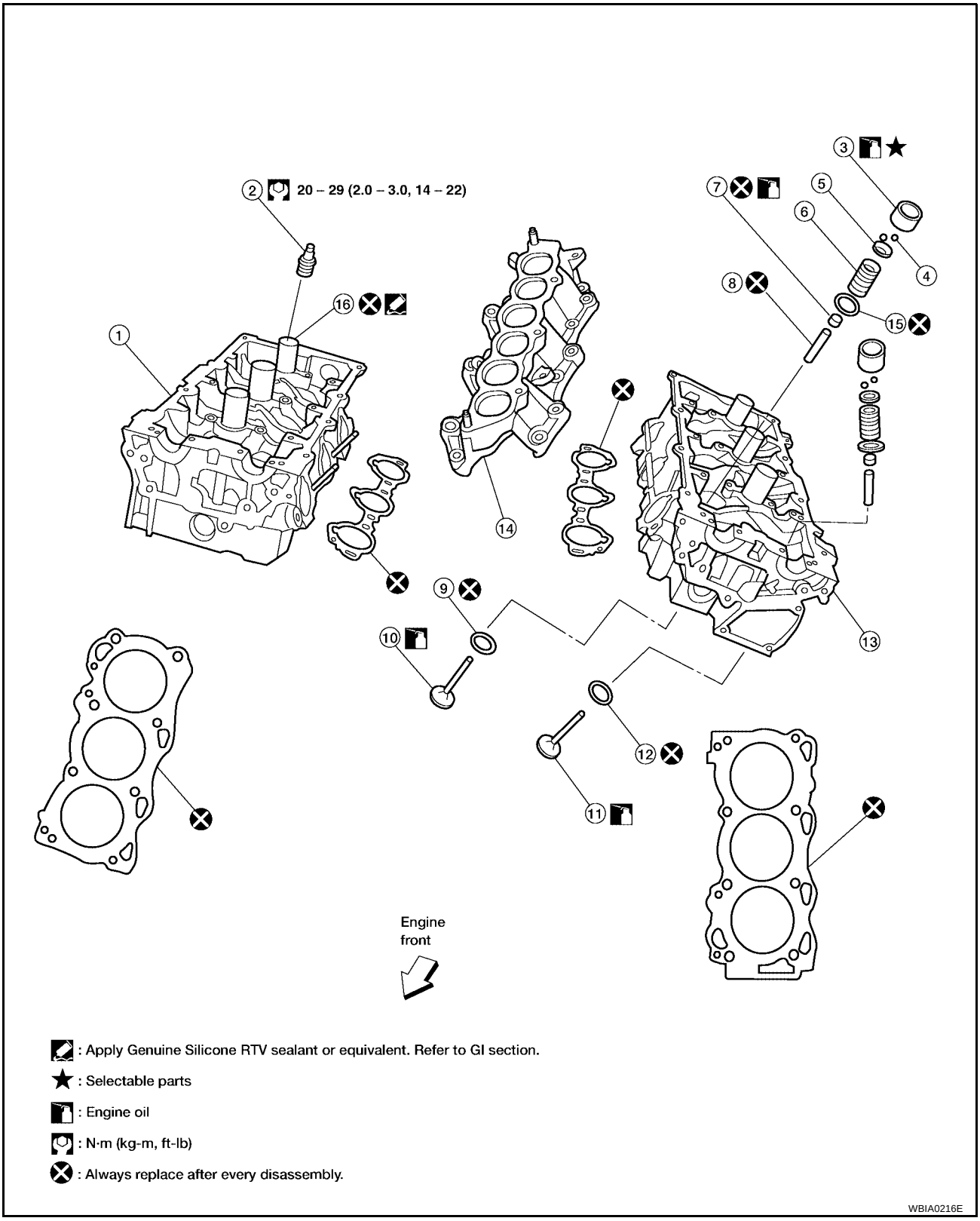

1. Cylinder head (right bank)
2. Spark plug
3. Valve lifter
4. Valve collet
5. Valve spring retainer
6. Valve spring
7. Valve oil seal
8. Valve guide
9. Valve seat (INT)
10. Valve (INT)
11. Valve (EXH)
12. Valve seat (EXH)
13. Cylinder head (left bank)
14. Intake manifold
15. Valve spring seat
16. Spark plug tube

CAUTION:

- **When installing camshafts, chain tensioners, oil seals, or other sliding parts, lubricate contacting surfaces with new engine oil.**
- **Apply new engine oil to threads and seat surface when installing cylinder head, camshaft sprocket, crankshaft pulley, and camshaft bracket.**
- **Attach tags to valve lifters so as not to mix them up.**

DISASSEMBLY

1. Remove spark plug.
2. Remove valve lifter.
   - Identify installation positions, and store them without mixing them up.
3. Remove valve collet.
   - Compress valve spring and remove valve collet with magnet hand using Tool.

   CAUTION:
   When working, take care not to damage valve lifter holes.

   Tool numbers **: KV10109220 (—)**
   : KV10116200 (J-26336-A)
   : KV10115900 (J-26336-20)

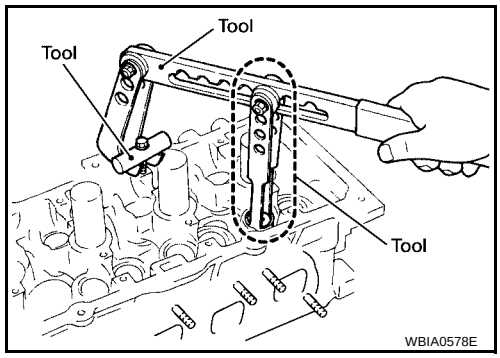

4. Remove valve spring retainer, valve spring and valve spring seat.
5. Push valve stem to combustion chamber side, and remove valve.
   - Identify installation positions, and store them without mixing them up.
6. Remove valve oil seals using Tool.

   Tool number **: KV10107902 (J-38959)**

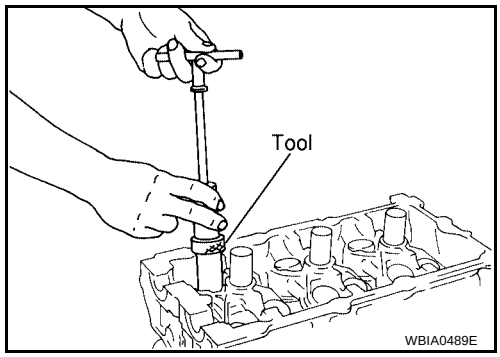

7. If valve seat must be replaced, refer to EM-217, "VALVE SEAT REPLACEMENT" .
8. If valve guide must be replaced, refer to EM-215, "VALVE GUIDE REPLACEMENT" .
9. Remove spark plug tube, as necessary.
   - Using pair of pliers, pull spark plug tube out of cylinder head.

   CAUTION:
   - **Take care not to damage cylinder head.**
   - **Once removed, spark plug tube will be deformed and cannot be reused. Do not remove it unless absolutely necessary.**

ASSEMBLY

1. When valve guide is removed, install it. Refer to EM-215, "VALVE GUIDE REPLACEMENT" .
2. When valve seat is removed, install it. Refer to EM-217, "VALVE SEAT REPLACEMENT" .

3. Install valve oil seals using Tool.

Tool number : — (J-39386)

Height "H' (Without valve spring seat installed)

Intake and exhaust : 14.3 - 14.9 mm (0.563 - 0.587 in)

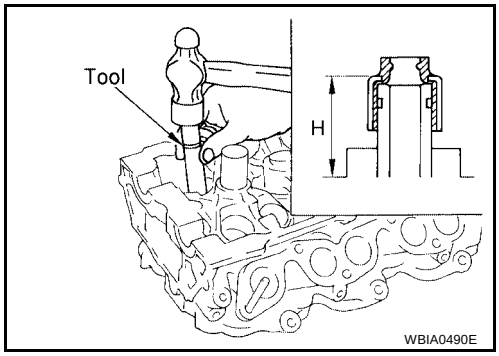

4. Install valve spring seat.
5. Install valves.
   - Install it in the original position.

   NOTE:
   Larger diameter valves are for intake side.

6. Install valve spring (uneven pitch type).
   - Install narrow pitch end (paint mark) to cylinder head side (valve spring seat side).
   - Intake side and exhaust side valve springs are different. Install them referring to the following paint mark collar.

Paint mark collar

Intake : Blue

Exhaust : White

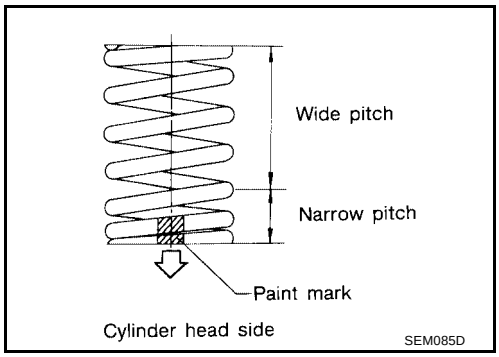

7. Install valve spring retainer.
8. Install valve collet.
   - Compress valve spring with valve spring compressor, attachment and adapter using Tool. Install valve collet with magnet hand.

   CAUTION:
   When working, take care not to damage valve lifter holes.
   - Tap valve stem edge lightly with plastic hammer after installation to check its installed condition.

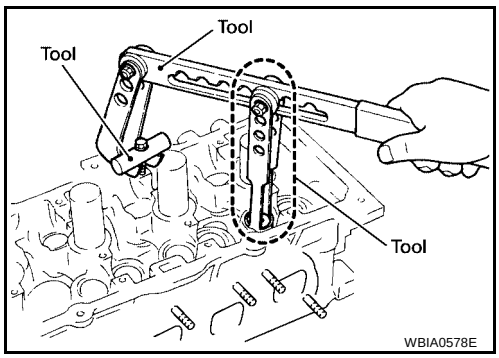

9. Install valve lifter.
   - Install it in the original position.
10. Install spark plug tube.
   - Press-fit spark plug tube as follows:

a. Remove old liquid gasket adhering to cylinder head mounting hole.

b. Apply sealant to area within approximately 12 mm (0.47 in) from edge of spark plug tube press-fit side.
Use Genuine High Strength Locking Sealant or equivalent. Refer to GI-45, "Recommended Chemical Products and Sealants" .

c. Press-fit spark plug tube so that its height “H” is as specified in the figure using suitable drift.

Standard press-fit height “H”

: 38.1 - 39.1 mm (1.500 - 1.539 in)

CAUTION:
- **When press-fitting, take care not to deform spark plug tube.**
- **After press-fitting, wipe off liquid gasket protruding onto cylinder-head upper face.**

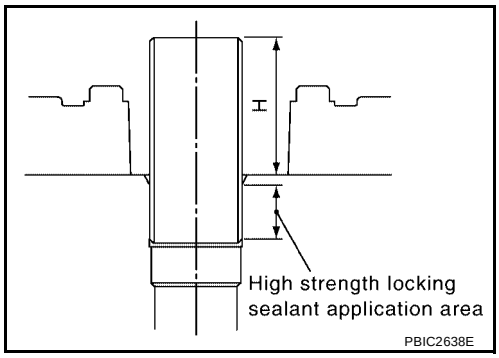

11. Install spark plug.

Inspection After Disassembly

EBS00J6D

CYLINDER HEAD DISTORTION

Clean the surface of the cylinder head. Use a reliable straightedge and feeler gauge to check the flatness of cylinder head surface.
Check along six positions as shown.

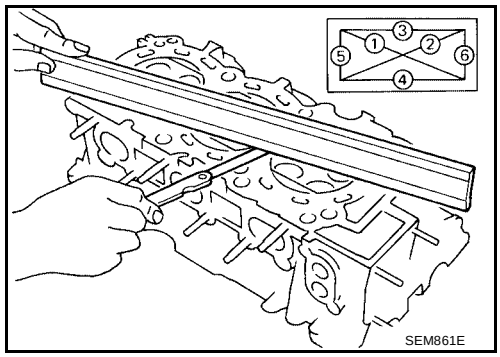

Head surface distortion

Limit	**: 0.1 mm (0.004 in)**
Standard	**: Less than 0.03 mm (0.0012 in)**

If beyond the specified limit, resurface or replace it.
The limit for cylinder head resurfacing is determined by the cylinder block resurfacing.

Resurfacing Limit

Amount of cylinder head resurfacing is "A".

Amount of cylinder block resurfacing is "B".

The maximum limit	**: A + B = 0.2 mm (0.008 in)**

After resurfacing cylinder head, check that camshaft rotates freely by hand. If resistance is felt, cylinder head must be replaced.

Nominal cylinder head height : 126.3 - 126.5 mm (4.972 - 4.980 in)

VALVE GUIDE CLEARANCE

1. Measure valve deflection as shown. (Valve and valve guide mostly wear in this direction.)

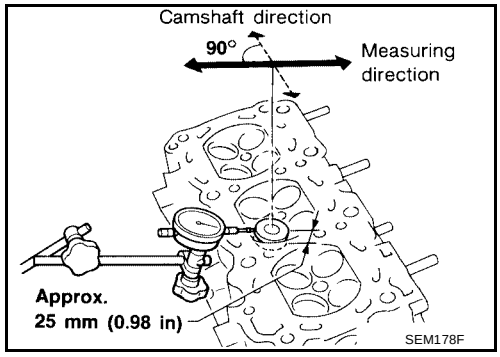

Valve deflection limit (dial gauge reading)

Intake	**: 0.24 mm (0.0094 in)**
Exhaust	**: 0.28 mm (0.0110 in)**

2. If it exceeds the limit, check valve to valve guide clearance.

a. Measure valve stem diameter and valve guide inner diameter.

b. Check that clearance is within specification.

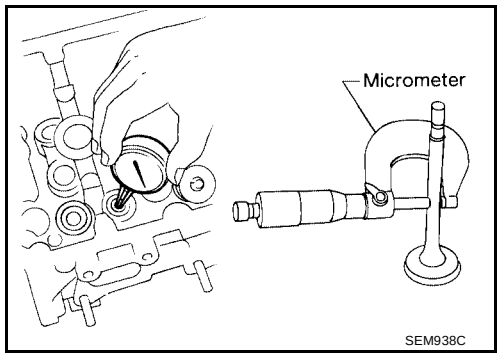

Valve to valve guide clearance standard

Intake	**: 0.020 - 0.053 mm (0.0008 - 0.0021 in)**
Exhaust	**: 0.040 - 0.073 mm (0.0016 - 0.0029 in)**

Valve to valve guide clearance limit

Intake	**: 0.08 mm (0.0031 in)**
Exhaust	**: 0.1 mm (0.004 in)**

c. If it exceeds the limit, replace valve or valve guide.

VALVE GUIDE REPLACEMENT

When valve guide is removed, replace with oversized [0.2 mm (0.008 in)] valve guide.

1. To remove valve guide, heat cylinder head to 110° to 130°C (230° to 266°F) by soaking in heated oil.

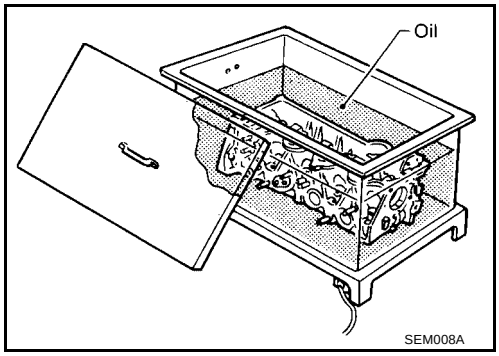

2. Drive out the valve guide with a press [under a 20 kN (2.2 US ton) pressure] or hammer and suitable tool.

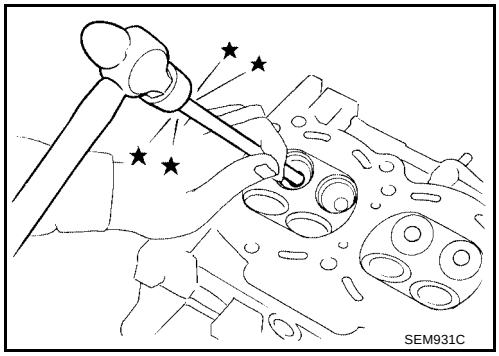

3. Ream cylinder head valve guide hole.

Valve guide hole diameter (for service parts), intake and exhaust	**: 10.175 - 10.196 mm (0.4006 - 0.4014 in)**

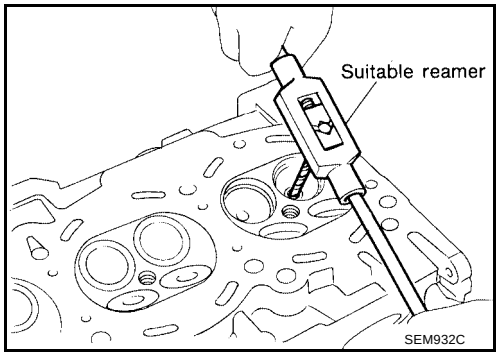

4. Heat cylinder head to 110° to 130°C (230° to 266°F) by soaking in heated oil and press new valve guide from camshaft side into the cylinder head to the dimensions as shown.

Projection "L" : 12.6 - 12.8 mm (0.496 - 0.504 in)

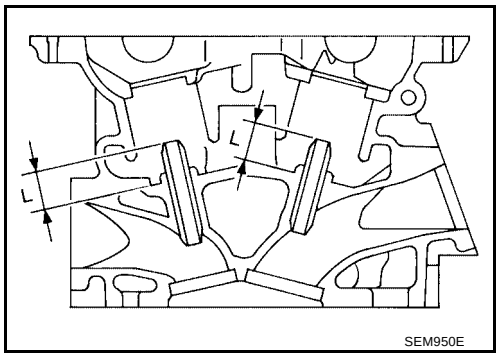

5. Using a valve guide reamer, apply a reamer finish to the valve guide.

Intake and exhaust finished size	**: 6.000 - 6.018 mm (0.2362 - 0.2369 in)**

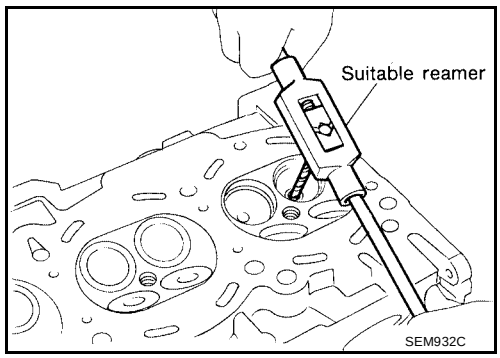

VALVE SEAT CONTACT

- After confirming that the dimensions of valve guides and valves are within specifications, perform this procedure.
- Apply prussian blue onto contacting surface of valve seat to check the condition of the valve contact on the surface.
- Check if the contact area band is continuous all around the circumference.
- If not, grind to adjust valve fitting and check again. If the contacting surface still has N.G conditions even after the re-check, replace valve seat.

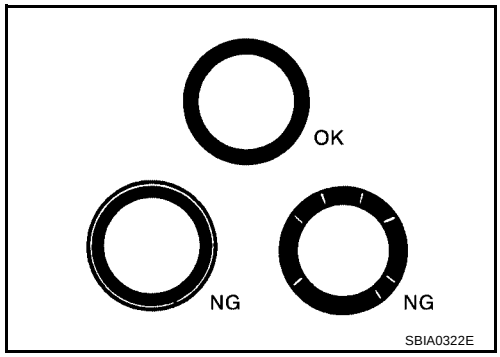

VALVE SEAT REPLACEMENT

1. Bore out old seat until it collapses. Boring should not continue beyond the bottom face of the seat recess in cylinder head. Set the machine depth stop to ensure this.
2. Ream cylinder head recess for service valve seat.

Oversize	**: 0.5 mm (0.020 in)**
Intake	**: 38.500 - 38.516 mm (1.5157 - 1.5164 in)**
Exhaust	**: 32.700 - 32.716 mm (1.2874 - 1.2880 in)**

Be sure to ream in circles concentric to the valve guide center.
This will enable valve seat to fit correctly.

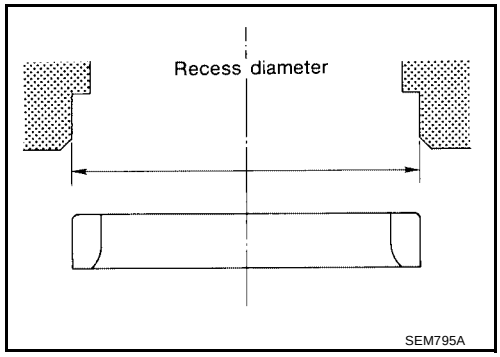

3. Heat cylinder head to 110° to 130°C (230° to 266°F) by soaking in heated oil.
4. Press fit valve seat until it seats on the bottom.
5. Cut or grind valve seat using suitable tool to the specified dimensions. Refer to EM-247, "VALVE" .
6. After cutting, lap valve seat with abrasive compound.
7. Check valve seating condition.

Seat face angle "α"	**: 45° 15' - 45° 45' degrees/minutes**
Contacting width "W" for intake	**: 1.09 - 1.31 mm (0.0429 - 0.0516 in)**
Contacting width "W" for exhaust	**: 1.29 - 1.51 mm (0.0508 - 0.0594 in)**

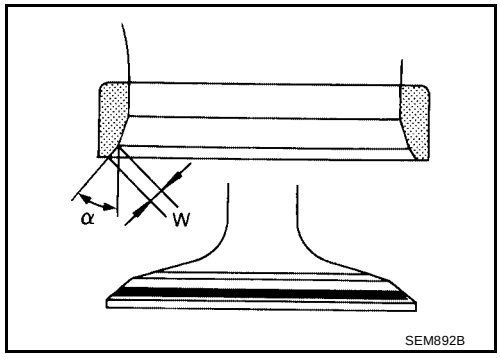

8. Use a depth gauge to measure the distance between the mounting surface of the cylinder head spring seat and the valve stem end. If the distance is shorter than specified, repeat step 5 to adjust it. If it is longer, replace the valve seat with a new one.

Valve seat resurface limit "L" intake	**: 41.07 - 41.67 mm (1.6169 - 1.6405 in)**
Valve seat resurface limit "L" exhaust	**: 41.00 - 41.60 mm (1.6142 - 1.6378 in)**

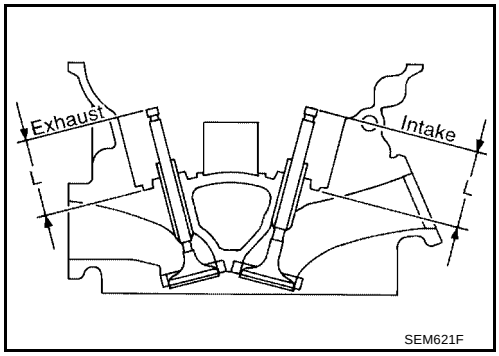

VALVE SPRING SQUARENESS

Set try square along the side of valve spring and rotate the spring. Measure the maximum clearance between the top face of spring and try square.

Out-of-square limit : Less than 2.0 mm (0.079 in)

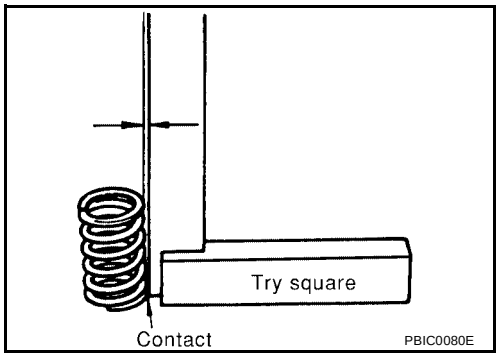

VALVE SPRING DIMENSIONS AND VALVE SPRING PRESSURE LOAD

Check valve spring pressure at specified spring height.

Standard	**: 166 - 188 N (16.9 - 19.2 kg, 37.3 = 42.3 lb) at height 37.0 mm (1.457 in)**
Limit	**: 373 - 418 N (38.0 - 42.6 kg, 83.9 - 94.0 lb) at height 27.2 mm (1.071 in)**

If it is not within specifications, replace the spring.

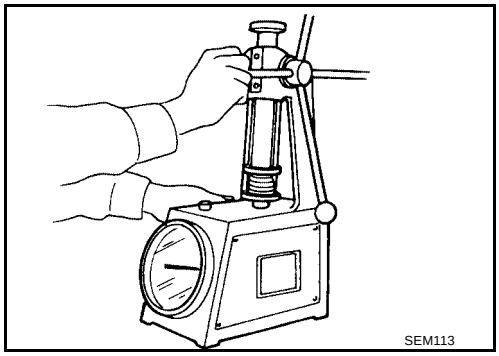

ENGINE ASSEMBLY

PFP:10001

Removal and Installation

EBS00J6E

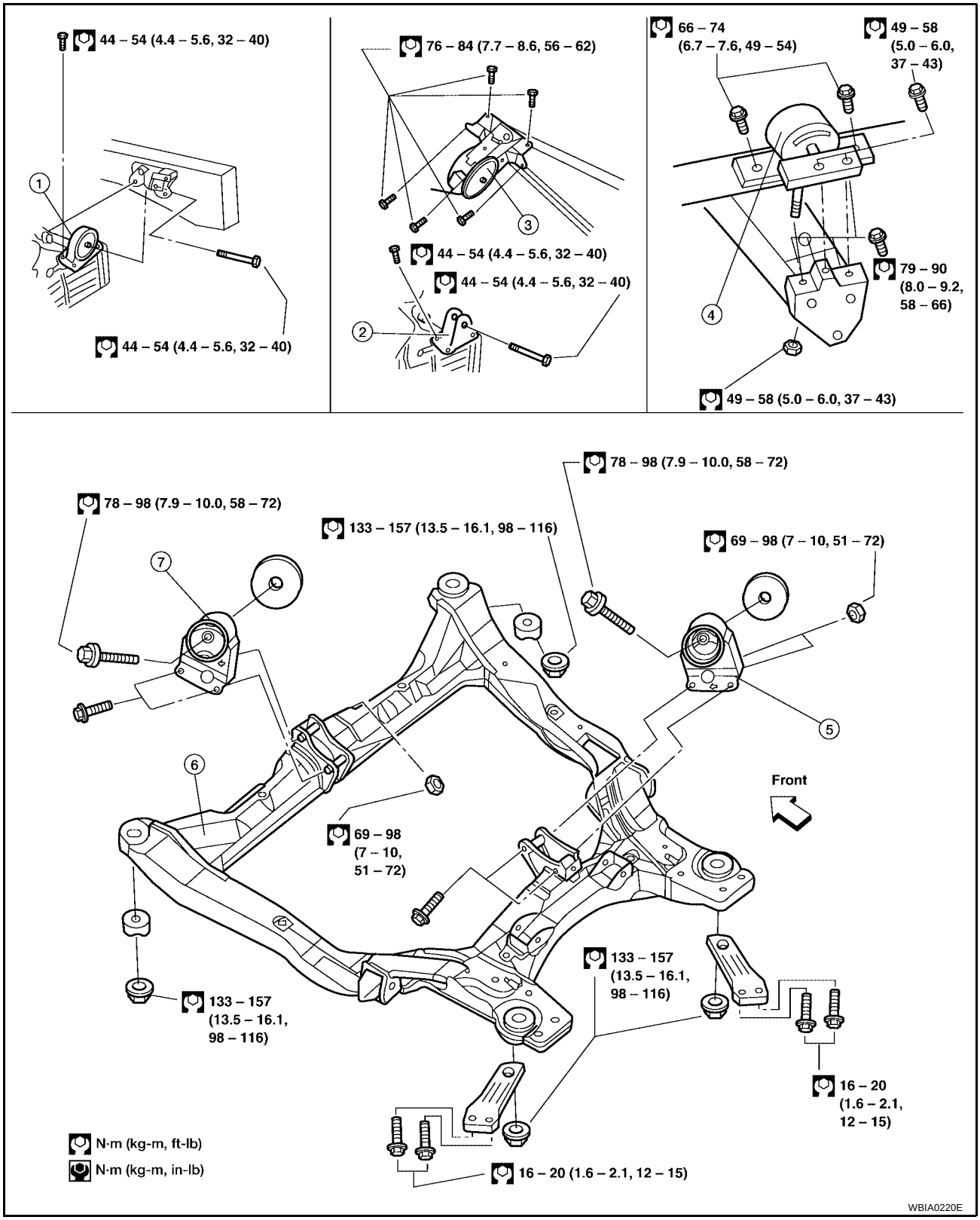

1. LH transaxle mounting insulator (A/T)
2. LH transaxle mounting bracket (M/T)
3. LH transaxle mounting bracket (M/T)

4. RH engine mounting insulator
5. Rear engine mounting insulator (electrically controlled with automatic transaxle)
6. Front suspension member
7. Front engine mounting insulator (electrically controlled with automatic transaxle)

WARNING:

- **Place chocks at front and back of rear wheels.**
- **For engines not equipped with engine slingers, attach proper slingers and bolts as described in the NISSAN Parts Catalog.**

CAUTION:

- **Do not start working until exhaust system and coolant are cool.**
- **If items or work required are not covered by the engine main body section, refer to the applicable sections.**
- **Use the correct supporting points for lifting and jacking. Refer to GI-40, "LIFTING POINT" .**
- **In removing the drive shafts, be careful not to damage any transaxle grease seals.**
- **Before separating the engine and transaxle, remove the crankshaft position sensor (POS).**
- **Do not damage the edge of the crankshaft position sensor (POS) or the ring gear teeth.**

REMOVAL

1. Release fuel pressure. Refer to EC-686, "FUEL PRESSURE RELEASE" .
2. Remove the engine cover, and the engine under cover using power tool.
3. Drain engine oil. MA-26, "Changing Engine Oil"
4. Drain coolant. Refer to CO-31, "DRAINING ENGINE COOLANT" .
5. Remove the following parts:
6. Remove hood assembly. Refer to BL-14, "Removal and Installation of Hood Assembly" .
7. Remove front tower bar using power tools.
8. Remove battery and tray using power tools.
9. Remove air inlet duct.
10. Remove air intake duct and air cleaner case assembly with mass air flow sensor.
11. Remove power brake booster vacuum hose.
12. Remove drive belts.
13. Remove radiator assembly, coolant reservoir, and system hoses. Refer to CO-34, "Removal and Installation" .
14. Remove windshield wiper assembly. Refer to EI-18, "Removal and Installation" .
15. Disconnect engine room harness from the engine side and set it aside. Disconnect engine harness ground connections.
16. Disconnect heater hoses.
17. Remove the front wheel and tires.
18. Remove the front drive shafts. Refer to FAX-11, "Removal and Installation" .
19. Discharge and recover the R134a refrigerant. Refer to ATC-102, "HFC-134a (R-134a) Service Procedure" .
20. Remove the A/C compressor using power tools.
21. Disconnect fuel hose quick connection at vehicle piping side. Refer to EM-147, "Removal and Installation" .
22. Disconnect the transaxle shift controls.
23. Remove the starter motor. Refer to SC-17, "Removal and Installation" .
24. Remove the front exhaust tube using power tools. Refer to EX-7, "Removal and Installation" .
25. Disconnect reservoir tank for the power steering from engine compartment bracket and position it aside.
26. Remove the front suspension member. Refer to FSU-15, "Removal and Installation" .

27. Disconnect the power steering pump, without disconnecting the piping, from the engine and move it aside and secure with wire.
28. Position a suitable transmission jack under the engine and transaxle assembly.
29. Install engine slingers into front of LH cylinder head and rear of RH cylinder head.
    - A : Vehicle front
    - B : Engine slinger rear
    - ⇒: Engine front

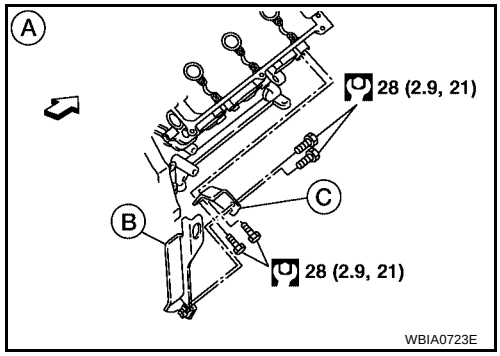

    - A : Vehicle rear
    - B : Engine front upper slinger
    - C : Engine front lower slinger
    - ⇒ : Engine front

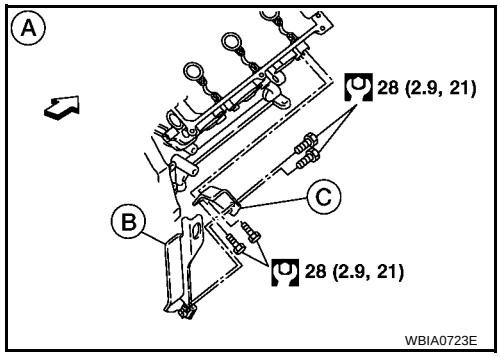

30. For additional safety, secure the engine in position with a hoist.
31. Disconnect the LH transaxle mount and the RH engine mount.
32. Carefully lower the engine and transaxle assembly using Tool, avoiding interference with the vehicle body.

    CAUTION:
    - **Before and during this procedure, always check if any harnesses are left connected.**
    - **Avoid any damage to, or any oil/grease smearing or spills onto the engine mounting insulators.**

    Tool number : — (J-47242)

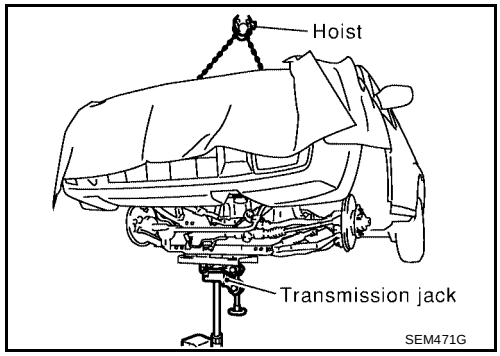

33. Remove the crankshaft position sensor (POS).
34. Separate the engine and transaxle and mount the engine on a suitable engine stand.

INSTALLATION

Installation is in the reverse order of removal.

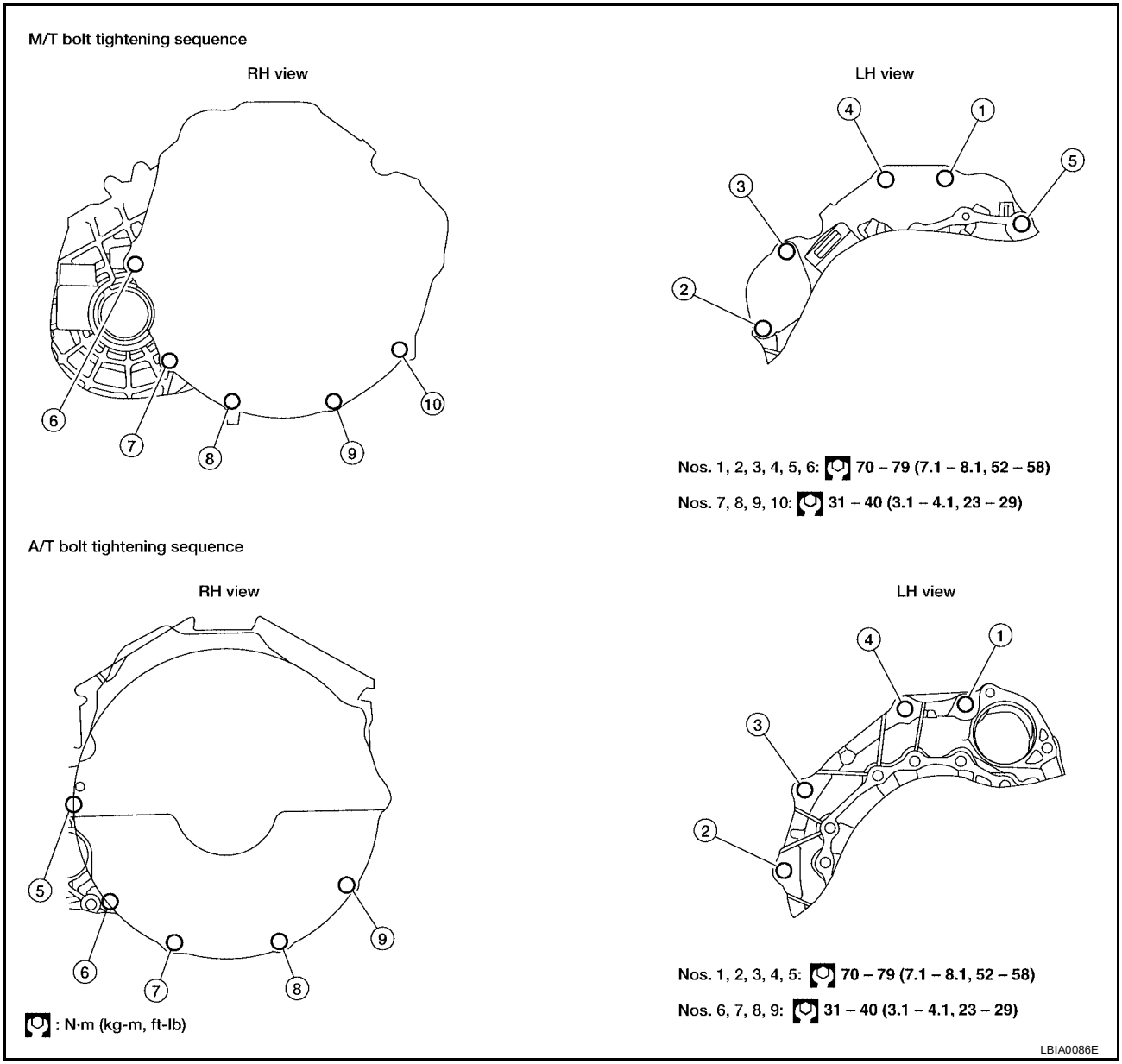

INSPECTION AFTER INSTALLATION

- Before starting engine, check the levels of engine coolant, engine oil and working fluid. If less than required quantity, fill to the specified level.
- Use procedure below to check for fuel leakage.
- Turn ignition switch ON (with engine stopped). With fuel pressure applied to fuel piping, check for fuel leakage at connection points.
- Start engine. With engine speed increased, check again for fuel leakage at connection points.
- Run engine to check for unusual noise and vibration.
- Warm up engine thoroughly to make sure there is no leakage of engine coolant, engine oil, working fluid, fuel and exhaust gas.
- Bleed air from passages in pipes and tubes of applicable lines, such as in cooling system.
- After cooling down engine, again check amounts of engine coolant, engine oil and working fluid. Refill to specified level, if necessary.
- Summary of the inspection items:

Item	Before starting engine	Engine running	After engine stopped
Engine coolant	Level	Leakage	Level
Engine oil	Level	Leakage	Level
Working fluid	Level	Leakage	Level
Fuel	Leakage	Leakage	Leakage
Exhaust gas	—	Leakage	—

*Transmission/transaxle/CVT fluid, power steering fluid, brake fluid, etc.

CYLINDER BLOCK

PFP:11010

Disassembly and Assembly

EBS00J6F

SEC. 110•120•226

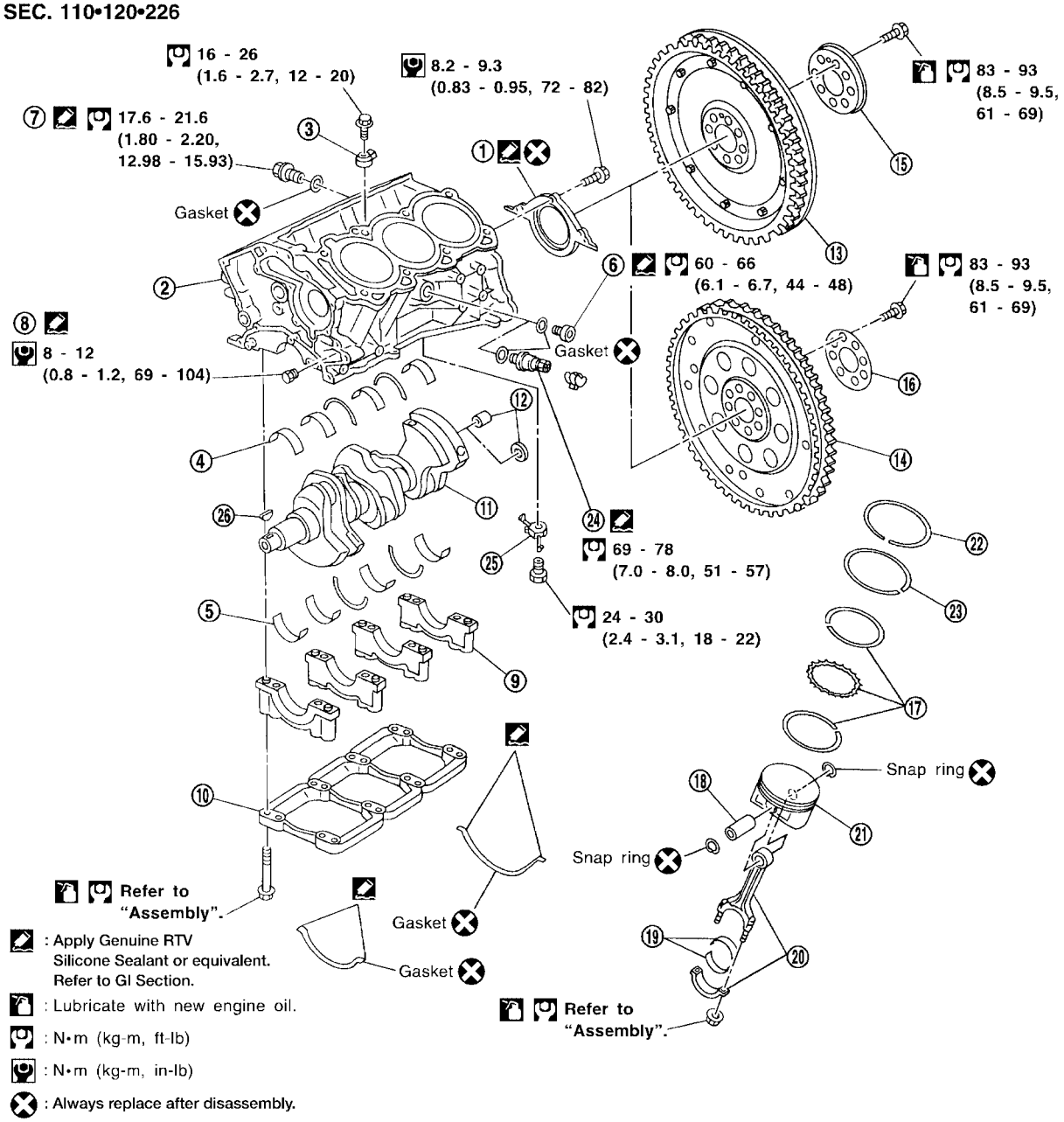

WBIA0217E

1. Rear oil seal retainer	2. Cylinder block	3. Knock sensor
4. Upper main bearing	5. Lower main bearing	6. Water drain plug (LH side)
7. Water drain plug (RH side)	8. Water drain plug (water pump side)	9. Main bearing cap
10. Main bearing beam	11. Crankshaft	12. Pilot bushing or pilot converter
13. Flywheel with signal plate (M/T)	14. Drive plate with signal plate (A/T)	15. Flywheel reinforcement
16. Drive plate reinforcement	17. Oil ring set	18. Piston pin
19. Connecting rod bearing	20. Connecting rod	21. Piston
22. Top ring	23. Second ring	24. Cylinder block heater (Canada only)
25. Oil jet	26. Key	

CAUTION:
- **Apply new engine oil to parts as marked in illustrations before installation.**
- **Place removed parts such as bearings and bearing caps in their proper order and direction.**
- **When installing the connecting rod nuts, and main bearing cap bolts, apply new engine oil to the threads and mating surfaces**
- **Do not allow any magnetic materials to contact the signal plate teeth on the drive plate.**

DISASSEMBLY

1. Remove the engine assembly. Refer to EM-219, "ENGINE ASSEMBLY" .
2. Install the engine on the engine stand.
3. Remove the knock sensor.

   CAUTION:
   Carefully handle sensor avoiding shocking it.
4. Drain the engine of all coolant and oil.
5. Remove the oil pan. Refer to EM-138, "Removal and Installation" .
6. Remove the timing chain. Refer to EM-164, "Removal" .
7. Remove the cylinder head. Refer to EM-201, "Removal and Installation" .
8. Remove drive plate. Fix crankshaft with a ring gear stopper, and remove bolts.
   - Loosen bolts in diagonal order.

   CAUTION:
   - **Do not disassemble drive plate.**
   - **Never place the drive plate with signal late facing down.**
   - **When handling signal plate, take care not to damage or scratch it.**
   - **Handle signal plate in a manner that prevents it from becoming magnetized.**

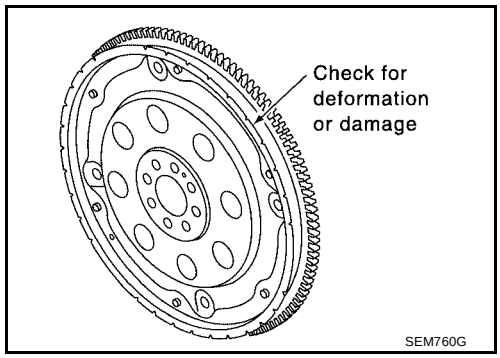

9. Remove pilot bushing (M/T) or converter (A/T) using Tool.

   Tool number : ST16610001 (J-23907)

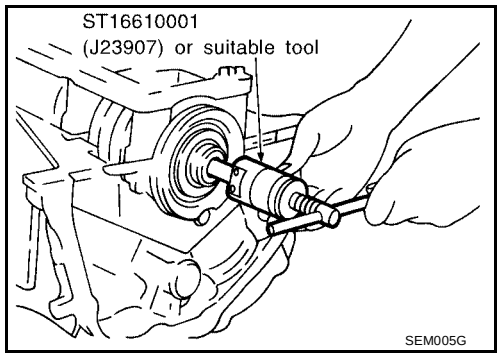

10. Cut away liquid gasket and remove rear oil seal retainer using Tool. Refer to EM-110, "REMOVAL OF LIQUID GASKET SEALING" .

    Tool number : KV10111100 (J-37228)

    CAUTION:
    - **Be careful not to damage mounting surface.**
    - **If rear oil seal retainer is removed, replace it with a new one.**

    NOTE:
    Rear oil seal and retainer form a single part and are handled as an assembly.

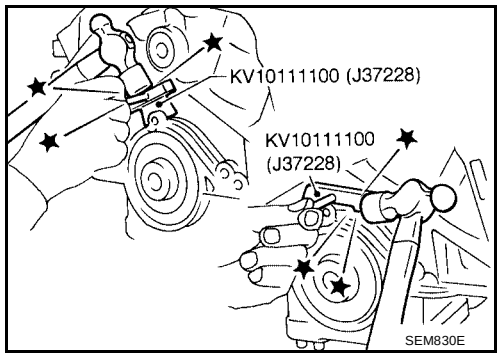

11. Remove the piston and connecting rod assemblies.

a. Position the crankshaft pin corresponding to the connecting rod to be removed onto the bottom dead center.

b. Remove the connecting rod cap.

c. Using a hammer handle or similar tool, push the piston and connecting rod assembly out to the cylinder head side.

- Before removing the piston and connecting rod assembly, check the connecting rod side clearance. Refer to EM-253, "CONNECTING ROD" .

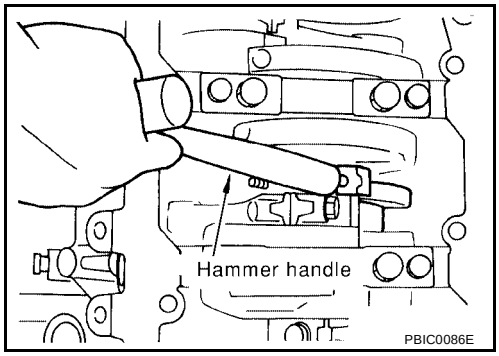

12. Remove the connecting rod bearings.

CAUTION:

- **When removing the connecting rod side bearings, note the installation position. Keep them in the correct order.**

13. Remove the piston rings from the piston.

- Use a piston ring expander.

CAUTION:

- **When removing the piston rings, be careful not to damage the piston. Do not expand the rings excessively.**
- **Be careful to mark the rings if they are to be reused so they are installed in their original position.**

- Before removing the piston rings, check the piston ring side clearance. Refer to EM-234, "PISTON RING SIDE CLEARANCE" .

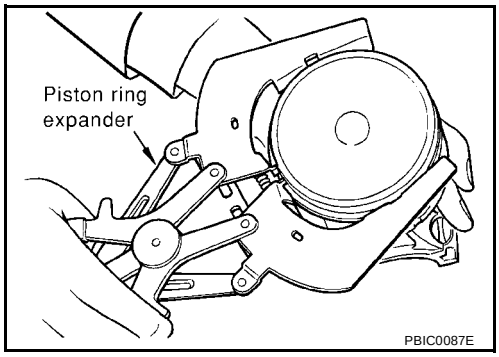

14. Remove the piston from the connecting rod as follows.

a. Using a snap ring pliers, remove the snap ring.

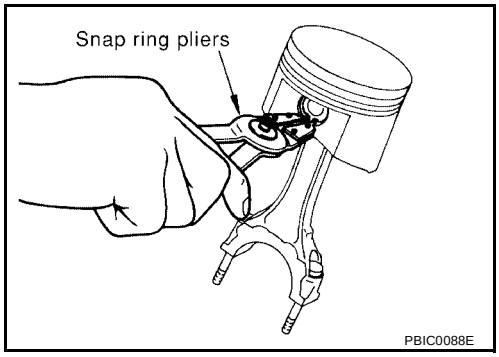

b. Heat the pistons to 60° - 70°C (140° - 158°F).

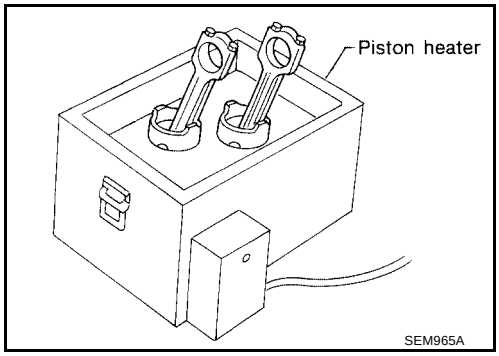

c. Push out the piston pin with a suitable tool, with an outer diameter approximately 20 mm (0.8 in).

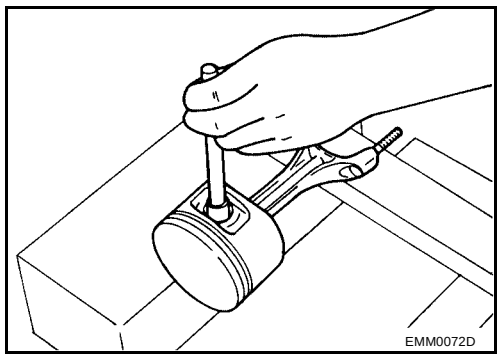

15. Remove the rear oil seal retainer from the cylinder block.
    - Insert a screwdriver or similar tool between the rear end of the crankshaft counter weight and rear oil seal retainer, and separate the liquid gasket to remove.

    CAUTION:
    Be careful not to damage the mating surface.

    NOTE:
    When replacing the rear oil seal during on-vehicle service, it is necessary to remove the oil pan. Refer to EM-138, "Removal and Installation" .
16. Loosen the bolts in the numerical order as shown and remove the main bearing beam, bearing caps and crankshaft.
    - Before loosening the main bearing cap bolts, measure the crankshaft side clearance.
      Refer to EM-239, "CRANKSHAFT" .

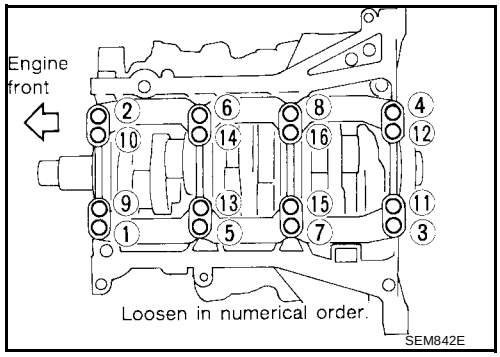

17. Remove the oil jets.
18. Remove the main bearings and thrust bearings from the cylinder block and main bearing caps.
    - When removing them, note the direction and position. Keep them in the correct order for installation.

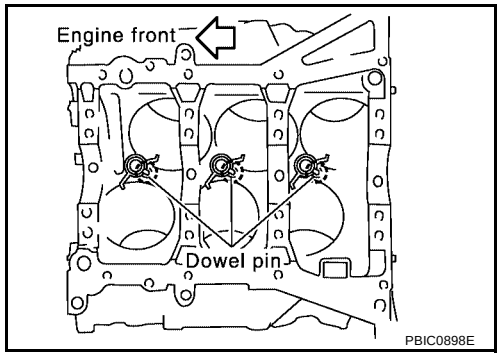

ASSEMBLY

1. Blow out the coolant and oil passages and cylinder bore to remove any foreign materials.

   CAUTION:
   Use goggles to protect your eyes.
2. Apply liquid gasket and install each plug into the cylinder block.
   - Use Genuine Silicone RTV Sealant or equivalent. Refer to MA-12, "RECOMMENDED FLUIDS AND LUBRICANTS" .

3. Install the oil jets.
   - Insert the oil jet dowel pin into the cylinder block dowel pin hole, and tighten the bolts.

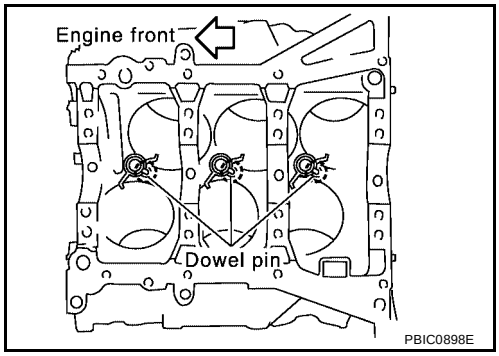

4. Install the main bearings and the thrust bearings.

a. Remove dust, dirt, and oil on the bearing mating surfaces of the cylinder block and the main bearing cap.

b. Install the thrust bearings to both sides of the No. 3 journal housing on the cylinder block and the main bearing cap.
   - Install the thrust bearings with the oil groove facing the crankshaft arm (outside).
   - Install bearing with a projection on one end on cylinder block and bearing with a projection at center on cap. Align each projection with mating notch.

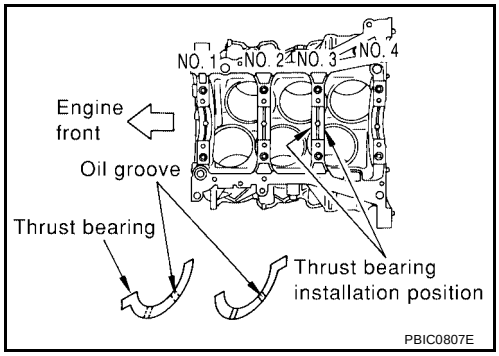

5. Set the upper main bearings in their proper positions on the cylinder block.
   - Confirm the correct main bearings are used. Refer to EM-237, "PISTON-TO-CYLINDER BORE CLEARANCE" .

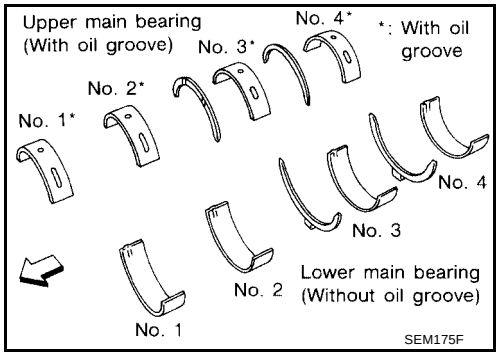

6. Instructions for the re-use of the main bearing cap bolts.
   - A plastic zone tightening method is used for tightening the main bearing cap bolts. Measure d1 and d2 as shown.
   - For d2, select the minimum diameter in the measuring area.
   - If the difference between d1 and d2 exceeds the limit, replace the bolts for assembly.

Limit (d1 - d2) : 0.11 mm (0.0043 in)

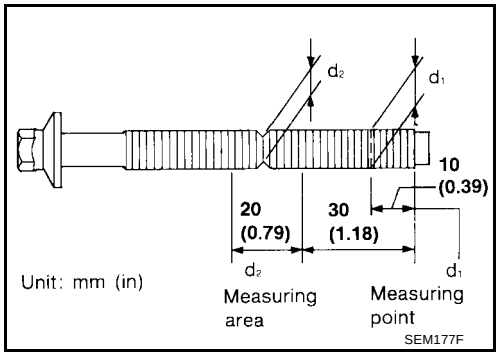

7. After installing the crankshaft, lower main bearings, main bearing caps, main bearing beam, and bearing cap bolts. Tighten the bearing cap bolts in the numerical order as shown.

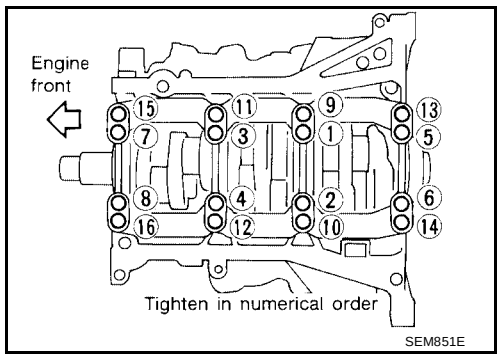

a. Make sure that the front marks on the main bearing beam faces the front of the engine.
b. Prior to tightening all the bearing cap bolts, place the bearing beam in its proper position by shifting the crankshaft in the axial position.
c. After tightening the bearing cap bolts, make sure the crankshaft turns smoothly.
d. Lubricate the threads and seat surfaces of the bolts with new engine oil.
e. Tighten the bolts in two stages:

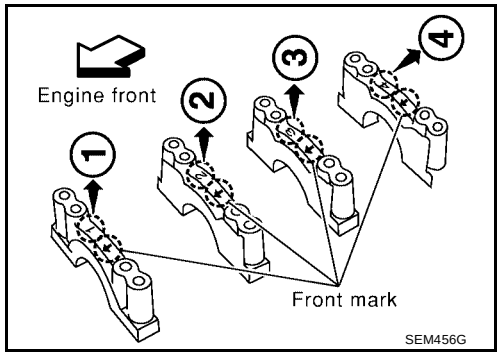

CAUTION:
Measure the tighten angle in stage 2 with an angle wrench. Do not measure visually.

Stage 1	**: 32 - 38 N·m (3.3 - 3.9 kg-m, 24 - 28 ft-lb)**
Stage 2	**: 90° - 95° degrees clockwise**
Tool number	**: KV10112100 (BT-8653-A)**

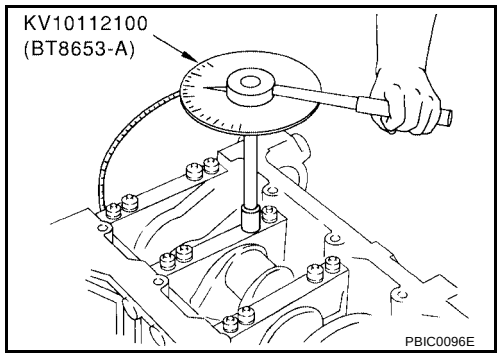

8. Measure crankshaft end play.
   - If beyond the limit, replace the bearing with a new one.

Standard	**: 0.10 - 0.25 mm (0.0039 - 0.0098 in)**
Limit	**: 0.30 mm (0.0118 in)**

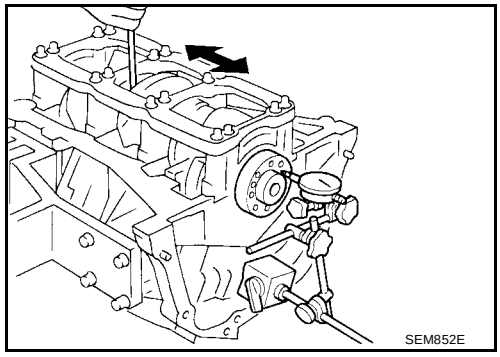

9. Install the rear oil seal retainer.
   - Apply sealant to rear oil seal retainer as shown.
     Use Genuine Silicone RTV Sealant, or equivalent. Refer to GI-45, "RECOMMENDED CHEMICAL PRODUCTS AND SEALANTS" .

Rear oil seal retainer bolts	**: 8.2 - 9.3 N·m (0.83 - 0.95 kg-m, 72 - 82 in-lb)**

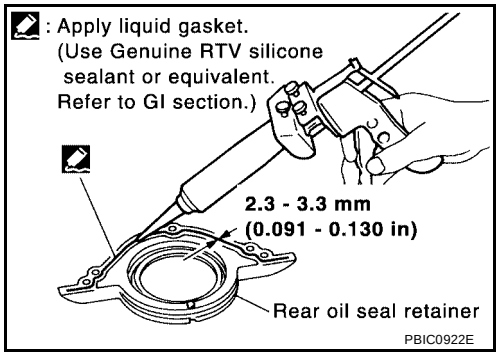

10. Install the piston to the connecting rod.

a. Using suitable snap ring pliers, install the snap ring into the pin-groove of the piston rear side.
   - Insert it fully into groove to install.

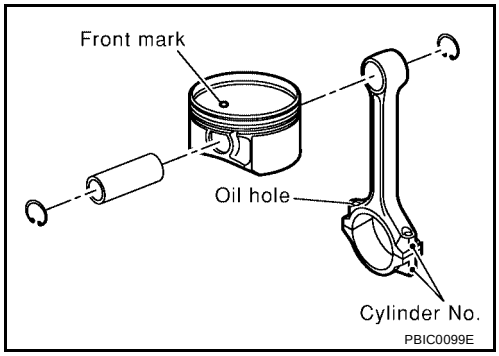

b. Install the piston to the connecting rod.
   - Heat the piston until the piston pin can be pushed in by hand without excess force [approx. 60° - 70°C (140° to 158°F)]. From the front to the rear, insert the piston pin into the piston and through the connecting rod.

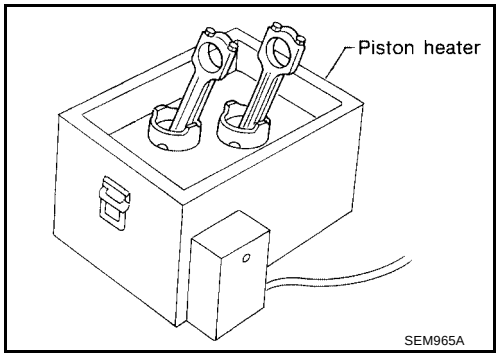

   - Assemble so that the front mark on the piston crown and the oil holes and the cylinder No. on the connecting rod are positioned as shown.

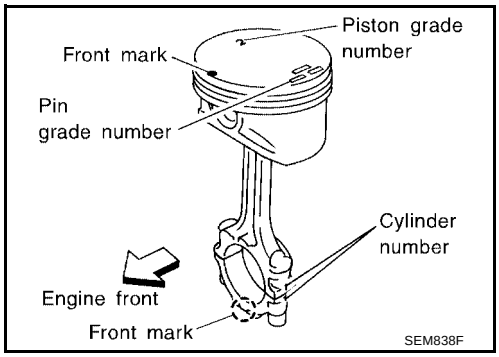

c. Install the snap ring into the front of the piston pin-groove.
   - After installing, check that the connecting rod pivots smoothly on the pin.

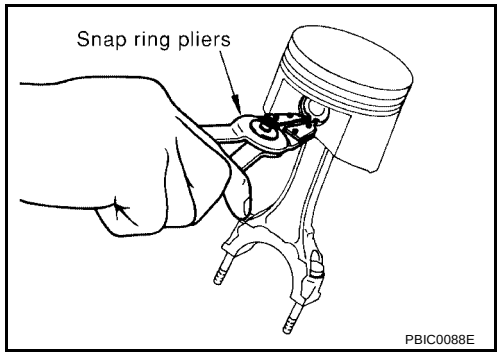

11. Using a piston ring expander, install the piston rings.

    CAUTION:
    - **Be careful not to damage the piston.**
    - **When the piston rings are not replaced, remount the rings in their original positions.**
    - **When replacing the piston rings, those without punch-marks can be mounted either side up.**
    - Position each ring with the gap as shown, referring to the piston front mark.
    - Install the top ring and the second ring with the stamped surface facing upward. If the ring is not stamped it can face in either direction.

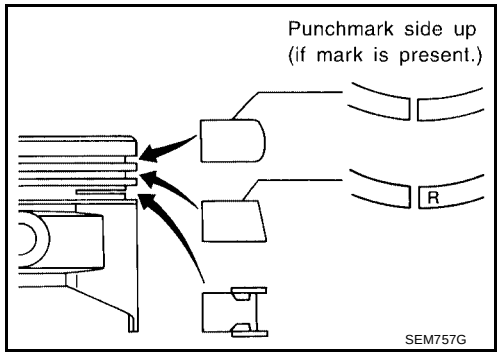

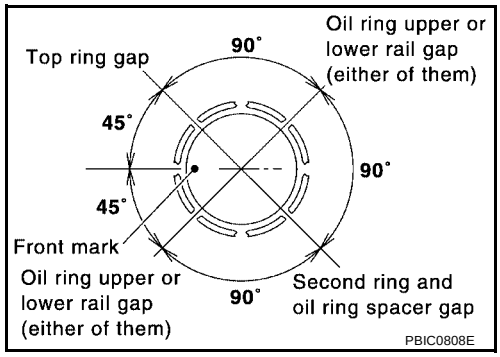

12. Install the connecting rod bearings to the connecting rod and the connecting rod cap.
    - When installing the connecting rod bearings, apply engine oil to the bearing surface (crankshaft side). Do not apply oil to the back surface (connecting rod and cap side), but thoroughly clean it.
    - When installing, align the connecting rod bearing protrusion with the notch of the connecting rod to install.
    - Check that the oil holes on the connecting rod and on the corresponding bearing are aligned.

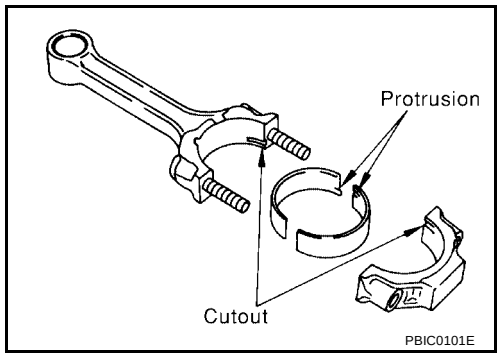

13. Install the piston and connecting rod assembly into the corresponding cylinder.
    - Position the crankshaft pin corresponding to the connecting rod to be installed onto the bottom dead center.
    - Apply engine oil sufficiently to the cylinder bore, piston, and crankshaft pin.
    - Match the cylinder position with the cylinder No. on the connecting rod to install.
    - Install the piston with the front mark on the piston crown facing the front of the engine, using a suitable tool.

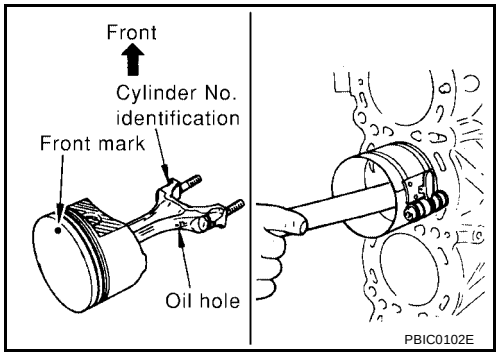

CAUTION:
Be careful not to damage the crankshaft pin and cylinder wall, resulting from an interference of the connecting rod big end.

14. Install the connecting rod cap.
    - Match the stamped cylinder number marks on the connecting rod with those on the cylinder cap for installation.
    - Install the piston connecting rod assembly and cap so that the front mark on the cap and piston are facing the front of the engine.
    - **Lubricate the threads and seat surfaces with new engine oil.**

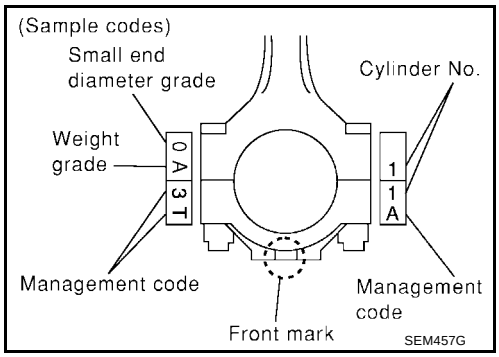

15. Check the connecting rod cap bolts before reusing, then install in their original position in the connecting rod. The bolts should screw in smoothly by hand.
    - Measure the outer diameter of the connecting rod cap bolt as shown.

Outer diameter "d" of the connecting rod bolt

Standard	**: 7.90 - 8.00 mm (0.3110 - 0.3150 in)**
Limit	**: 7.75 mm (0.3051 in)**

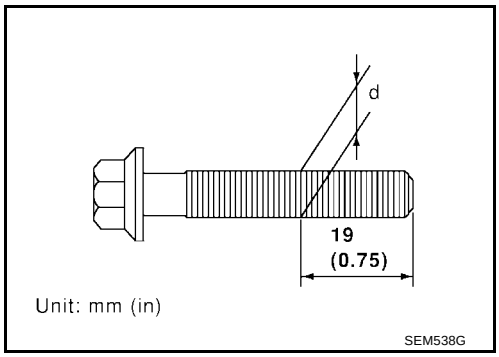

16. Tighten the connecting rod nuts in two stages:

Stage 1	**: 19 - 21 N·m (1.9 - 2.1 kg-m, 14 - 15 ft-lb)**
Stage 2	**: 90° - 95° degrees clockwise**

CAUTION:
Always use either an angle wrench or protractor. Avoid tightening based on visual check alone.

Tool number : KV10112100 (BT-8653-A)

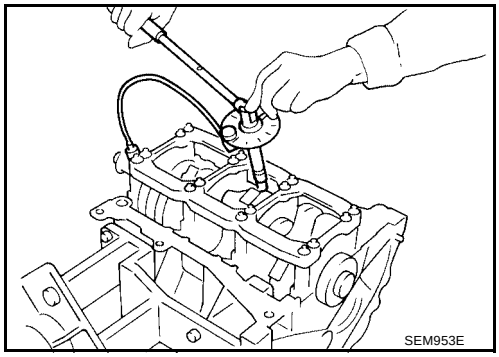

- Apply engine oil to the threads and seats of the connecting rod bolts and nuts.
- After tightening the nuts, make sure that the crankshaft rotates smoothly.
- Check the connecting rod side clearance. If beyond the limit, replace the connecting rod and/or crankshaft.

Connecting rod side clearance:

Standard	**: 0.20 - 0.35 mm (0.0079 - 0.0138 in)**
Limit	**: 0.40 mm (0.0157 in)**

17. Install the knock sensor.
    - Make sure that there is no foreign material on the cylinder block mating surface and the back surface of the knock sensor.
    - Install the knock sensor with the connector facing the rear of the engine.
    - Do not tighten the bolts while holding the connector.
    - Make sure that the knock sensor does not interfere with other parts.

    CAUTION:
    If any impact by dropping occurs to the knock sensor, replace it with new one.

    Knock sensor bolt **: 16 - 26 N·m (1.6 - 2.7 kg-m, 12 - 20 in-lb)**

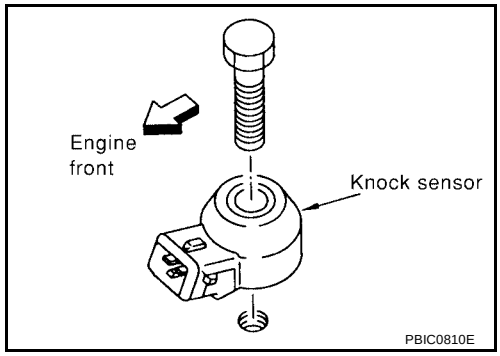

18. Install the pilot bushing (M/T) or converter (A/T) as shown.

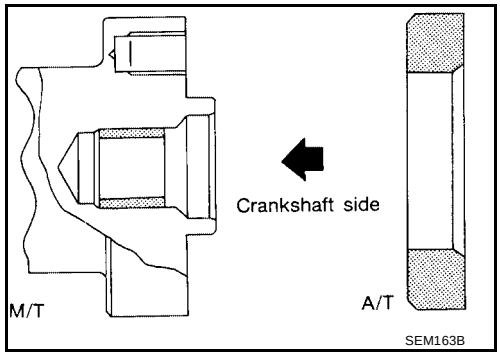

19. Install the flywheel (M/T), if equipped.
    - When installing flywheel to crankshaft, be sure to correctly align crankshaft side dowel pin and flywheel side dowel pin hole.

    Flywheel bolts **: 83 - 93 N·m (8.5 - 95 kg-m, 61 - 69 ft-lb)**

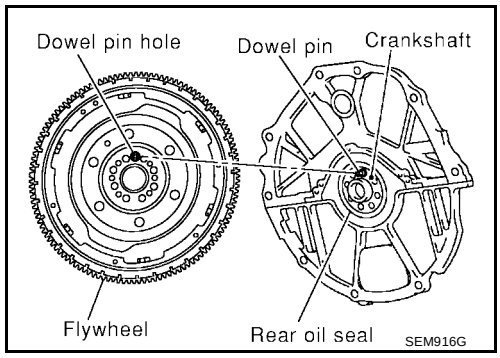

20. Install the drive plate (A/T), if equipped.
    - Install the drive plate and reinforce plate in the direction as shown.
    - Align dowel pins of crankshaft rear and drive plate with pin holes of each part.
    - Secure the crankshaft using a ring gear stopper.
    - Tighten the drive plate bolts in one or two steps.

    Drive plate bolts **: 83 - 93 N·m (8.5 - 95 kg-m, 61 - 69 ft-lb)**

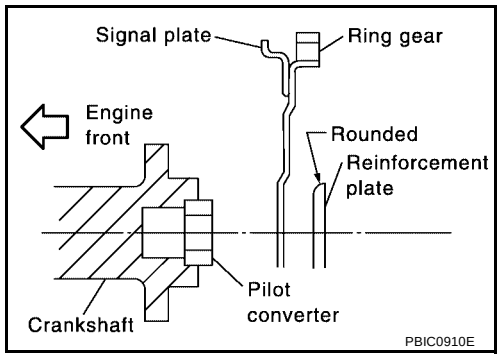

21. Install the cylinder head. Refer to EM-201, "Removal and Installation" .
22. Install the timing chain. Refer to EM-172, "Installation" .
23. Install the oil pan. Refer to EM-138, "Removal and Installation" .
24. Remove the engine from the stand and install the engine assembly into the vehicle. Refer to EM-219, "Removal and Installation" .

25. Assembly of the remaining parts is in the reverse order of disassembly.
26. Fill the engine with the specified oil and coolant. Refer to MA-12, "Fluids and Lubricants" .

CAUTION:
Wait at least 30 minutes for the sealant to set-up before filling the engine with fluids and running it.

Inspection

EBS00J6G

PISTON AND PISTON PIN CLEARANCE

Inner Diameter of Piston Pin Hole

- Measure the inner diameter of piston pin hole "dp".

Standard diameter "dp"

Grade No. 0 : 21.993 - 21.999 mm (0.8659 - 0.8661 in)

Grade No. 1 : 21.999 - 22.005 mm (0.8661 - 0.8663 in)

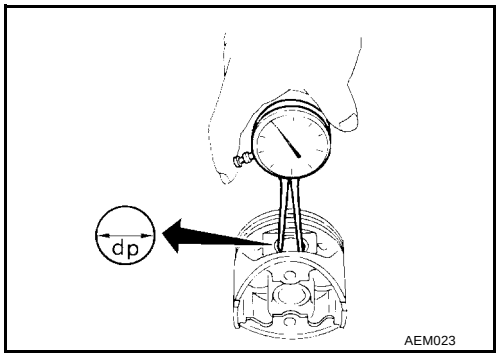

Outer Diameter of Piston Pin

- Measure outer diameter of piston pin "Dp".

Standard diameter "Dp"

Grade No. 0 : 21.989 - 21.995 mm (0.8657 - 0.8659 in)

Grade No. 1 : 21.995 - 22.001 mm (0.8659 - 0.8662 in)

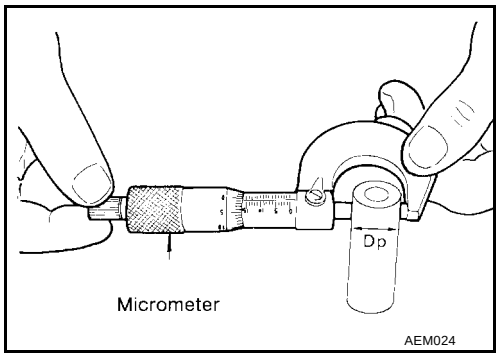

Piston and Piston Pin Interference Fit

Standard Interference Fit = "Dp" – "dp"

Standard : 0.002 mm (0.0001 in) - 0.006 mm (0.0002 in) = - 0.0004 mm (-0.0001 in)

- If clearance is exceeds specification, replace either or both of piston/piston pin assembly and connecting rod assembly with reference to specification of each part.

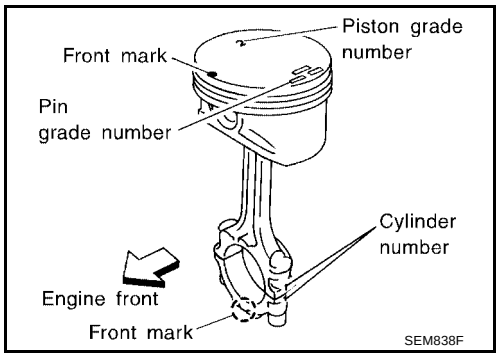

PISTON RING SIDE CLEARANCE

- Measure side clearance of piston ring and piston ring groove with feeler gauge.

Standard Side Clearance

Top ring : 0.045 - 0.080 mm (0.0018 - 0.0031 in)

2nd ring : 0.030 - 0.070 mm (0.0012 - 0.0028 in)

Oil ring : 0.065 - 0.135 mm (0.0026 - 0.0053 in)

Maximum Limit

Top ring : 0.11 mm (0.0043 in)

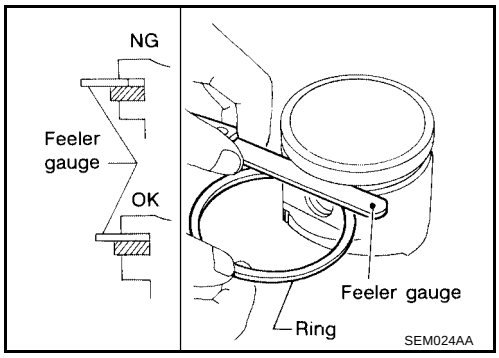

2nd ring	**: 0.1 mm (0.004 in)**
Oil ring	**: —**

- If out of specification, replace piston ring assembly. If clearance exceeds maximum limit with new rings, replace piston

PISTON RING END GAP

- Insert piston ring until it is in the middle of the cylinder bore and measure the end gap.

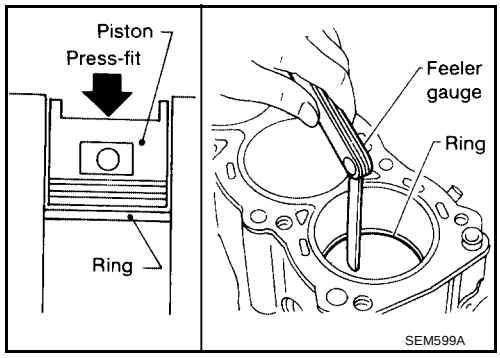

Standard

Top ring	**: 0.23 - 0.33 mm (0.0091 - 0.0130 in)**
2nd ring	**: 0.33 - 0.48 mm (0.0130 - 0.0189 in)**
Oil ring	**: 0.20 - 0.50 mm (0.0079 - 0.0197 in)**

Limit:

Top ring	**: 0.54 mm (0.0213 in)**
2nd ring	**: 0.80 mm (0.0315 in)**
Oil ring	**: 0.95 mm (0.0374 in)**

- If out of specification, replace piston ring. If gap still exceeds the limit even with a new ring, re-bore cylinder and use oversized piston and piston ring.

CONNECTING ROD BEND AND TORSION

Bend	**: Limit 0.15 mm (0.0059 in) per 100 mm (3.94 in) length**
Torsion	**: Limit 0.30 mm (0.0118 in) per 100 mm (3.94 in) length**

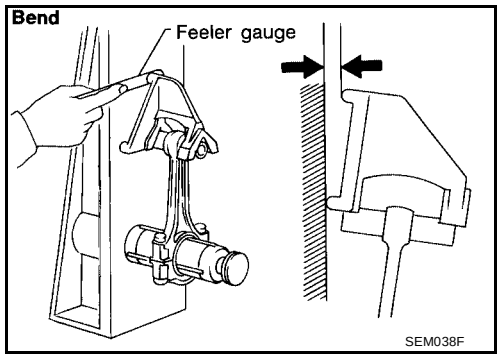

- If it exceeds the limit, replace connecting rod assembly.

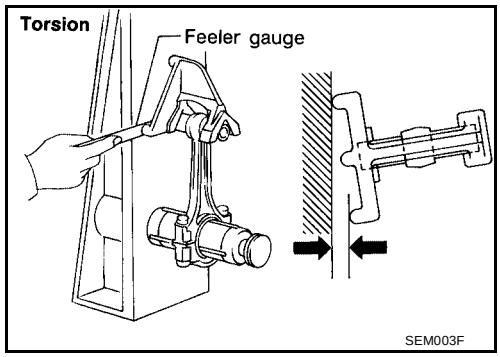

CONNECTING ROD BEARING HOUSING DIAMETER (BIG END)

- Install the connecting rod cap without the connecting rod bearing installed. After tightening the connecting rod nut to the specified torque, measure the connecting rod bearing housing big end inner diameter using an inside micrometer.

Standard : 55.000 - 55.013 mm (2.1654 - 2.1659 in)

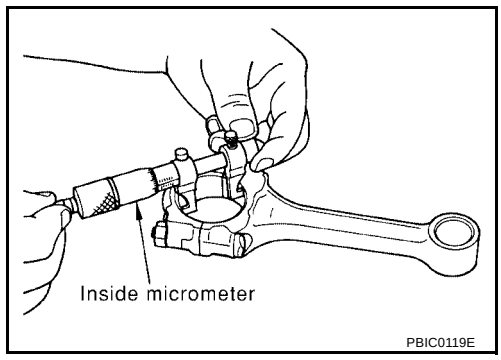

CONNECTING ROD BUSHING OIL CLEARANCE (SMALL END)

Inner Diameter of Connecting Rod (Small End)

- Measure inner diameter of piston pin bushing.

Standard Grade No. 0
: 22.000 - 22.006 mm (0.8661 - 0.8664 in)
Grade No. 1
: 22.006 - 22.012 mm (0.8664 - 0.8666 in)

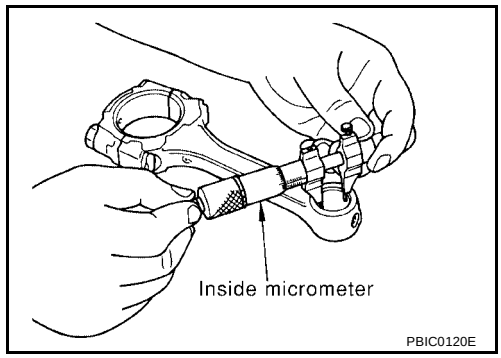

Outer Diameter of Piston Pin

- Measure outer diameter of piston pin.

Standard Grade No. 0
: 21.989 - 21.995 mm (0.8657 - 0.8659 in)
Grade No. 1
: 21.995 - 22.001 mm (0.8659 -0.8662 in)

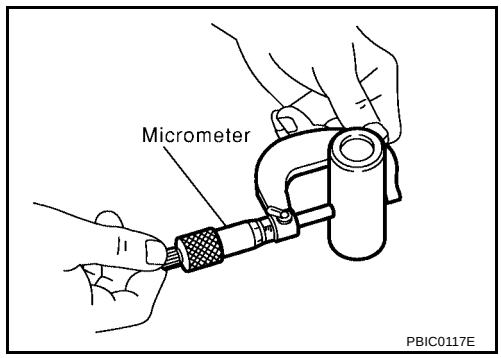

Connecting Rod Bushing Oil Clearance (Small End)

(Connecting rod small end oil clearance) = (Inner diameter of connecting rod small end) – (Outer diameter of piston pin)

Standard : 0.005 - 0.017 mm (0.0002 - 0.007 in)
Limit : 0.030 - mm (0.0012 in)

- If the measured value exceeds the standard, replace the connecting rod assembly and/or piston and piston pin assembly.
- If replacing the piston and piston pin assembly, refer to the Table for Selective Fitting for Piston to select the piston corresponding to the applicable bore grade of the cylinder block to be used. Refer to EM-237, "PISTON-TO-CYLINDER BORE CLEARANCE" .

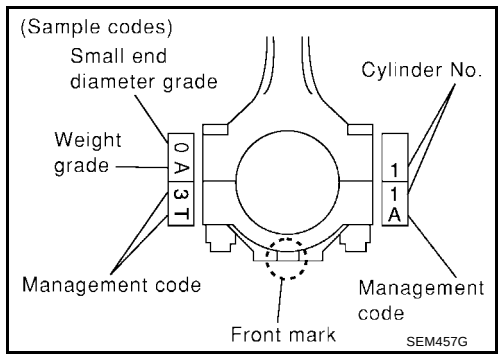

Factory installed parts grading:

- Service parts apply only to grade 0.

Unit: mm (in)

Grade	0	1
Connecting rod small end inner diameter	22.000 - 22.006 (0.8661 - 0.8664)	22.006 - 22.012 (0.8664 - 0.8666)
Piston pin outer diameter	21.989 - 21.995 (0.8657 - 0.8659)	21.995 - 22. 001 (0.8659 - 0.8662)
Piston pin hole diameter	21.993 - 21.999 (0.8659 - 0.8661)	21.999 - 22.005 (0.8661 - 0.8663)

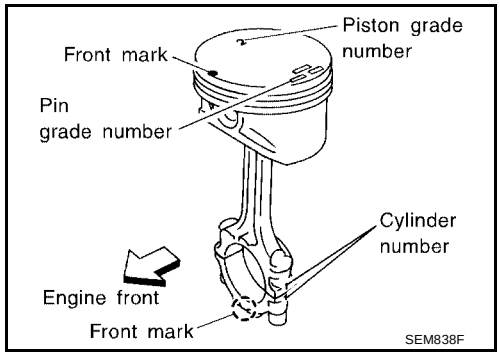

CYLINDER BLOCK DISTORTION

- Using a scraper, remove any old gasket material on the cylinder block surface, and remove any oil, scale, carbon, or other contamination.

  CAUTION:
  Be careful not to allow gasket flakes to enter the oil or coolant passages.

- Measure the distortion on the block upper face at different points in six directions.

  Distortion limit : 0.10 mm (0.0039 in)

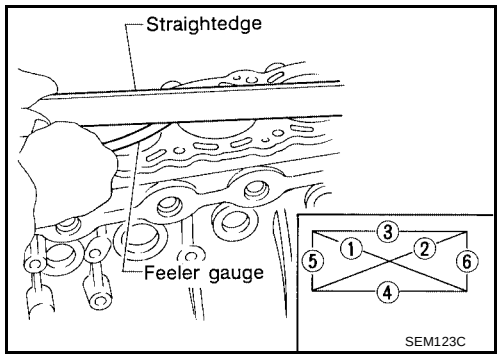

- If out of specification, resurface the cylinder block. The allowable amount of resurfacing is dependent on the amount of any cylinder head resurfacing. The resurfacing limit is [amount of cylinder head resurfacing] + [amount of cylinder head resurfacing] = 0.2 mm (0.008 in).

  Cylinder block height : 214.95 - 215.05 mm (8.4626 - 8.4665 in)

INNER DIAMETER OF MAIN BEARING HOUSING

- Install the main bearing caps with the main bearings removed, and tighten the bolts to the specified torque.
- Using a bore gauge, measure the inner diameter of the main bearing housing.

  Standard : 63.993 - 64.017 mm (2.5194 - 2.5203 in)

- If out of the standard, replace the cylinder block and main bearing caps as an assembly.

  NOTE:
  These components cannot be replaced as a single unit, because they were processed together.

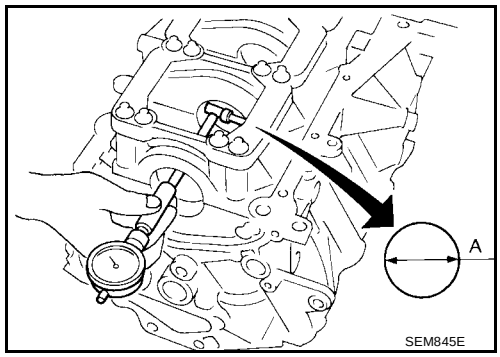

PISTON-TO-CYLINDER BORE CLEARANCE

1. Using a bore gauge, measure cylinder bore for wear, out-of-round and taper. The X axis is in the longitudinal direction of the engine.

Cylinder bore inner diameter

Grade No.	Standard inner diameter	Wear limit
No. 1	95.500 - 95.510 mm (3.7598 - 3.7602 in)	0.20 mm (0.0079 in)
No. 2	95.510 - 95.520 mm (3.7602 - 3.7606 in)	
No. 3	95.520 - 95.530 mm (3.7606 - 3.7610 in)	

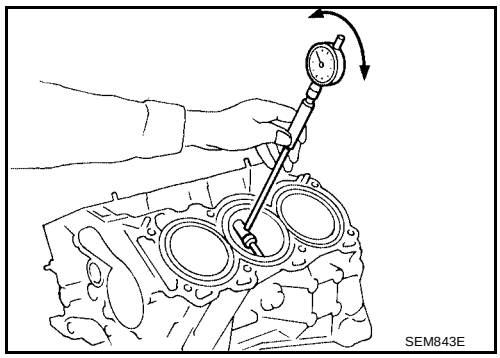

If it exceeds the limit, rebore all cylinders. Replace cylinder block if necessary.

Out-of-round (Difference between X and Y)	**: limit 0.015 mm (0.0006 in)**
Taper (Difference between A and C)	**: limit 0.015 mm (0.0006 in)**

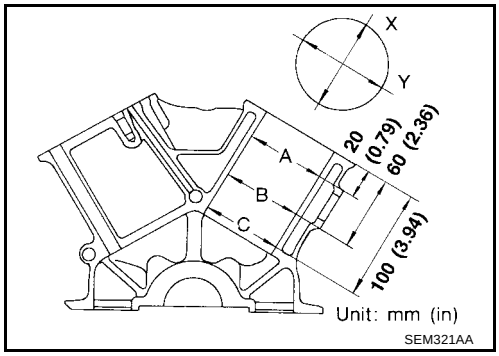

2. Check for scratches and seizure. If seizure is found, hone it.
   - **If both cylinder block and piston are replaced with new ones, select piston of the same grade number punched on cylinder block rear position. These numbers are punched in either Arabic or Roman numerals.**

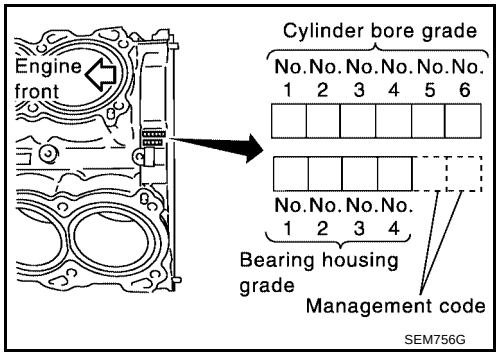

3. Measure piston skirt diameter.

Piston diameter "A"	**: Refer to EM-252, "PISTON, PISTON RING AND PISTON PIN" .**
Measuring point "a" (Distance from the top)	**: 41.0 mm (1.61 in)**

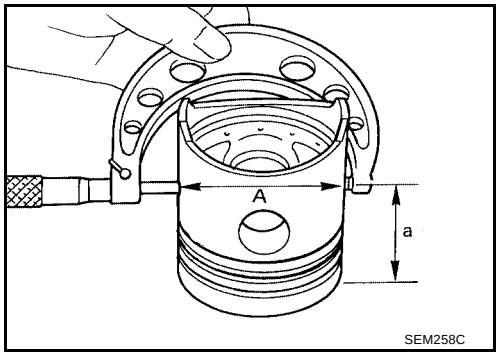

4. Check that piston-to-bore clearance is within specification.

Piston-to-bore clearance at "B"	**: 0.010 - 0.030 mm (0.0004 - 0.0012 in)**

   - The piston-to-bore clearance is measured at the "B" level in the cylinder as shown.

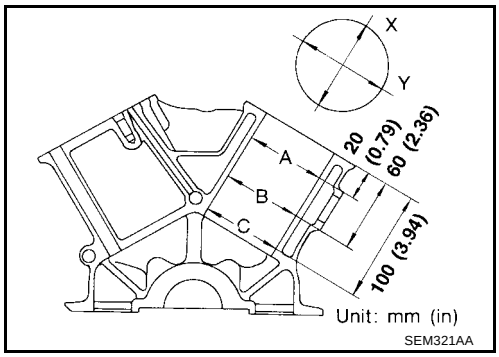

5. Determine piston oversize according to amount of cylinder wear.
   Oversize pistons are available for service.
   Refer to EM-252, "PISTON, PISTON RING AND PISTON PIN" .
6. Cylinder bore size is determined by adding piston-to-bore clearance to piston diameter "A".

Rebored size calculation	**: D = A + B – C**

where,

D	**: Bored diameter**
A	**: Piston diameter as measured**

B	**: Piston-to-bore clearance**
C	**: Honing allowance 0.02 mm (0.0008 in)**

7. Install main bearing caps, and tighten to the specified torque. Otherwise, cylinder bores may be distorted after boring.
8. Cut cylinder bores.
   - **When any cylinder needs boring, all other cylinders must also be bored.**
   - **Do not cut too much out of cylinder bore at a time. Cut only 0.05 mm (0.0020 in) or so in diameter at a time.**
9. Hone cylinders to obtain specified piston-to-bore clearance.
10. Measure finished cylinder bore for out-of-round and taper.
    - **Measurement should be done after cylinder bore cools down.**

CRANKSHAFT

1. Check the crankshaft main and pin journals for scoring, wear, or cracks.
2. Measure the journals for taper and out-of-round.

Standard	
Out-of-round (X - Y)	**: 0.002 mm (0.0001 in)**
Taper (A - B)	**: 0.002 mm (0.0001 in)**

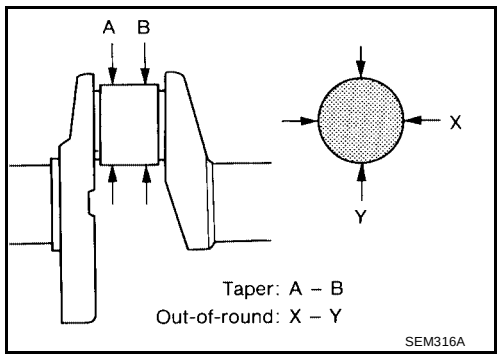

3. Measure crankshaft runout.

a. Place a V-block on a precise flat table to support the journals on the both ends of the crankshaft.
b. Place a dial gauge straight up on the No. 3 journal.
c. While rotating the crankshaft, read the movement of the pointer on the dial gauge.

Runout limit (total indicator reading)	**: 0.10 mm (0.0039 in)**

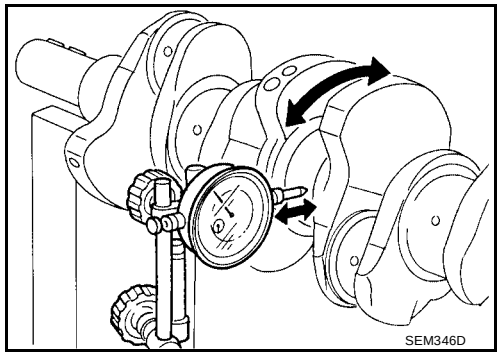

BEARING CLEARANCE

- Use either of the following two methods, however method "A" gives more reliable results and so is the preferred method.

Method A (Using Bore Gauge and Micrometer)

Main Bearing

1. Set the main bearings in their proper positions on the cylinder block and the main bearing cap.
2. Install the main bearing caps and bearing beam to the cylinder block. Tighten all bolts in the numerical order as specified. Refer to EM-224, "Disassembly and Assembly" .

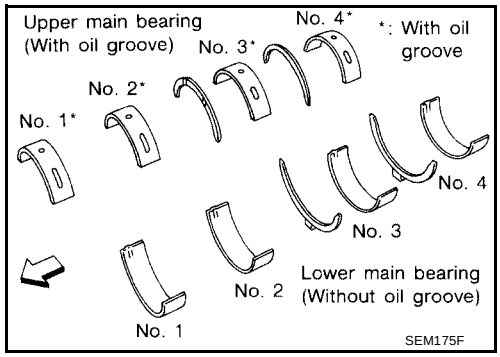

3. Measure the inner diameters "A" of each main bearing as shown.

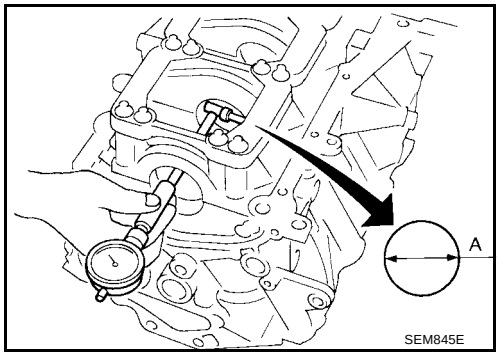

4. Measure the outer diameters "Dm" of each crankshaft main journal as shown.
5. Calculate the main bearing clearance.
Main bearing clearance = "A" - "Dm"

Standard : 0.035 - 0.045 mm (0.0014 - 0.0018 in)

Limit : 0.065 mm (0.0026 in)

- If it exceeds the limit, replace the bearing.
- If clearance cannot be adjusted using any standard bearing grade, grind crankshaft journal and use an undersized bearing.

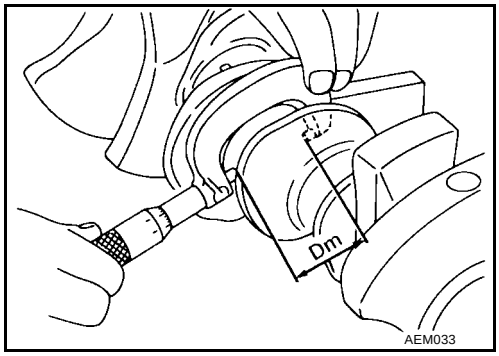

- When grinding the crankshaft journal, confirm that the "L" dimension in the fillet role is more than the specified limit.

"L" : 0.1 mm (0.004 in)

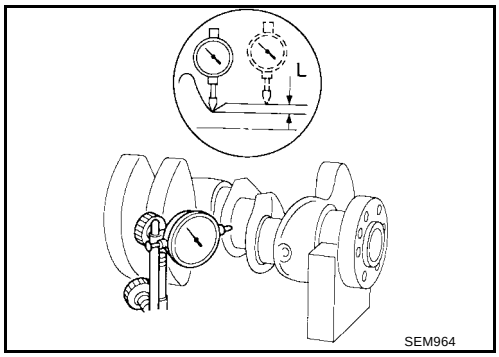

6. If the crankshaft or the cylinder block is replaced with a new one, select thickness of the main bearings as follows:

a. The grade number of each cylinder block main journal is punched on the respective cylinder block. These numbers are punched in either Arabic or Roman numerals. If measured diameter is out of the grade punched, decide suitable grade from available main bearings.

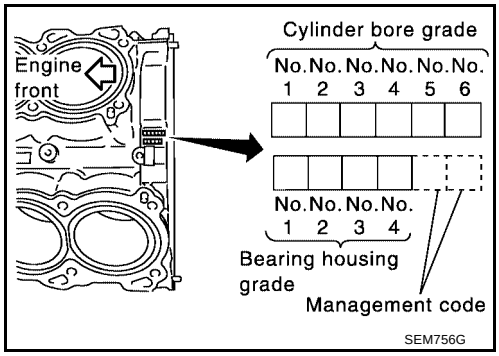

b. The grade number of each crankshaft main journal is punched on the crankshaft end. These numbers are punched in either Arabic or Roman numerals. If measured diameter is out of grade punched, decide the suitable grade from available main bearings.

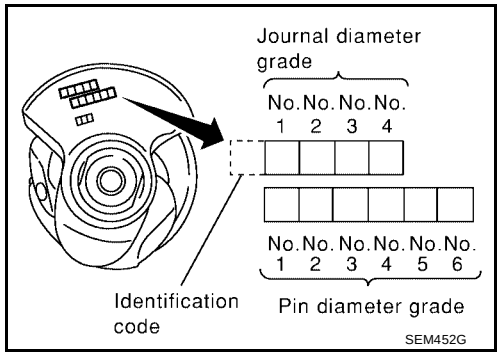

c. Select the main bearing suitable thickness according to the following table:

Mark	Axle diameter \ Cylinder block bearing housing inner diameter (Unit: mm (in)) / Crankshaft main journal diameter (Unit: mm (in))	A	B	C	D	E	F	G	H	J	K	L	M	N	P	R	S	T	U	V	W	X	Y	4	7
	Hole diameter	63.993 - 63.994 (2.5194 - 2.5194)	63.994 - 63.995 (2.5194 - 2.5195)	63.995 - 63.996 (2.5195 - 2.5195)	63.996 - 63.997 (2.5195 - 2.5196)	63.997 - 63.998 (2.5196 - 2.5196)	63.998 - 63.999 (2.5196 - 2.5196)	63.999 - 64.000 (2.5196 - 2.5197)	64.000 - 64.001 (2.5197 - 2.5197)	64.001 - 64.002 (2.5197 - 2.5198)	64.002 - 64.003 (2.5198 - 2.5198)	64.003 - 64.004 (2.5198 - 2.5198)	64.004 - 64.005 (2.5198 - 2.5199)	64.005 - 64.006 (2.5199 - 2.5199)	64.006 - 64.007 (2.5199 - 2.5200)	64.007 - 64.008 (2.5200 - 2.5200)	64.008 - 64.009 (2.5200 - 2.5200)	64.009 - 64.010 (2.5200 - 2.5201)	64.010 - 64.011 (2.5201 - 2.5201)	64.011 - 64.012 (2.5201 - 2.5202)	64.012 - 64.013 (2.5202 - 2.5202)	64.013 - 64.014 (2.5202 - 2.5202)	64.014 - 64.015 (2.5202 - 2.5203)	64.015 - 64.016 (2.5203 - 2.5203)	64.016 - 64.017 (2.5203 - 2.5203)
A	59.975 - 59.974 (2.3612 - 2.3612)	0	0	0	01	01	01	1	1	1	12	12	12	2	2	2	23	23	23	3	3	3	34	34	34
B	59.974 - 59.973 (2.3612 - 2.3611)	0	0	01	01	01	1	1	1	12	12	12	2	2	2	23	23	23	3	3	3	34	34	34	4
C	59.973 - 59.972 (2.3611 - 2.3611)	0	01	01	01	1	1	1	12	12	12	2	2	2	23	23	23	3	3	3	34	34	34	4	4
D	59.972 - 59.971 (2.3611 - 2.3611)	01	01	01	1	1	1	12	12	12	2	2	2	23	23	23	3	3	3	34	34	34	4	4	4
E	59.971 - 59.970 (2.3611 - 2.3610)	01	01	1	1	1	12	12	12	2	2	2	23	23	23	3	3	3	34	34	34	4	4	4	45
F	59.970 - 59.969 (2.3610 - 2.3610)	01	1	1	1	12	12	12	2	2	2	23	23	23	3	3	3	34	34	34	4	4	4	45	45
G	59.969 - 59.968 (2.3610 - 2.3609)	1	1	1	12	12	12	2	2	2	23	23	23	3	3	3	34	34	34	4	4	4	45	45	45
H	59.968 - 59.967 (2.3609 - 2.3609)	1	1	12	12	12	2	2	2	23	23	23	3	3	3	34	34	34	4	4	4	45	45	45	5
J	59.967 - 59.966 (2.3609 - 2.3609)	1	12	12	12	2	2	2	23	23	23	3	3	3	34	34	34	4	4	4	45	45	45	5	5
K	59.966 - 59.965 (2.3909 - 2.3608)	12	12	12	2	2	2	23	23	23	3	3	3	34	34	34	4	4	4	45	45	45	5	5	5
L	59.965 - 59.964 (2.3608 - 2.3608)	12	12	2	2	2	23	23	23	3	3	3	34	34	34	4	4	4	45	45	45	5	5	5	56
M	59.964 - 59.963 (2.3608 - 2.3607)	12	2	2	2	23	23	23	3	3	3	34	34	34	4	4	4	45	45	45	5	5	5	56	56
N	59.963 - 59.962 (2.3607 - 2.3607)	2	2	2	23	23	23	3	3	3	34	34	34	4	4	4	45	45	45	5	5	5	56	56	56
P	59.962 - 59.961 (2.3607 - 2.3607)	2	2	23	23	23	3	3	3	34	34	34	4	4	4	45	45	45	5	5	5	56	56	56	6
R	59.961 - 59.960 (2.3607 - 2.3606)	2	23	23	23	3	3	3	34	34	34	4	4	4	45	45	45	5	5	5	56	56	56	6	6
S	59.960 - 59.959 (2.3606 - 2.3606)	23	23	23	3	3	3	34	34	34	4	4	4	45	45	45	5	5	5	56	56	56	6	6	6
T	59.959 - 59.958 (2.3606 - 2.3605)	23	23	3	3	3	34	34	34	4	4	4	45	45	45	5	5	5	56	56	56	6	6	6	67
U	59.958 - 59.957 (2.3605 - 2.3605)	23	3	3	3	34	34	34	4	4	4	45	45	45	5	5	5	56	56	56	6	6	6	67	67
V	59.957 - 59.956 (2.3605 - 2.3605)	3	3	3	34	34	34	4	4	4	45	45	45	5	5	5	56	56	56	6	6	6	67	67	67
W	59.956 - 59.955 (2.3605 - 2.3604)	3	3	34	34	34	4	4	4	45	45	45	5	5	5	56	56	56	6	6	6	67	67	67	7
X	59.955 - 59.954 (2.3604 - 2.3604)	3	34	34	34	4	4	4	45	45	45	5	5	5	56	56	56	6	6	6	67	67	67	7	7
Y	59.954 - 59.953 (2.3604 - 2.3603)	34	34	34	4	4	4	45	45	45	5	5	5	56	56	56	6	6	6	67	67	67	7	7	7
4	59.953 - 59.952 (2.3603 - 2.3603)	34	34	4	4	4	45	45	45	5	5	5	56	56	56	6	6	6	67	67	67	7	7	7	7
7	59.952 - 59.951 (2.3603 - 2.3603)	34	4	4	4	45	45	45	5	5	5	56	56	56	6	6	6	67	67	67	7	7	7	7	7

PBIC0814E

Connecting Rod Bearing (Big End)

1. Install the connecting rod bearing to the connecting rod and cap.
2. Install the connecting rod cap to the connecting rod. Tighten to specification. Refer to EM-224, "Disassembly and Assembly" .

3. Measure the inner diameter "C" of each connecting rod (big end) as shown.

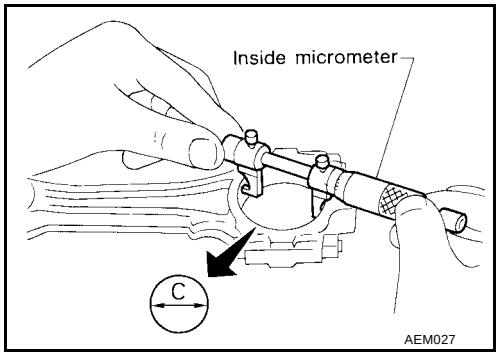

4. Measure the outer diameter "Dp" of each crankshaft pin journal.
5. Calculate the connecting rod bearing clearance.
   Connecting rod bearing clearance = C - Dp

   Standard : 0.034 - 0.059 mm (0.0013 - 0.0023 in)
   Limit : 0.070 mm (0.0028 in)

6. If the calculated clearance exceeds the specified limit, replace the bearings.
7. If the clearance cannot be adjusted within the standard of any bearing, grind the crankshaft journal and use undersized bearings.

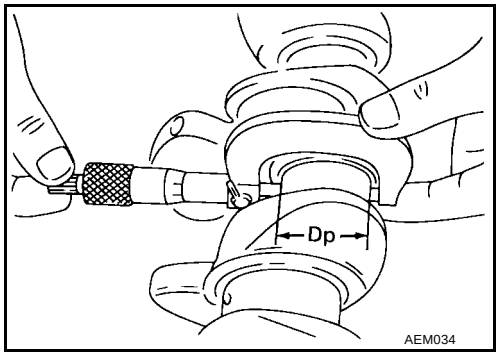

8. If the crankshaft is replaced with a new one, select the connecting rod bearings according to the following table:
   Connecting Rod Bearing Grade Number (Identification Color)

Crankshaft pin journal grade number	Connecting rod bearing grade number
0	0 (black)
1	1 (brown)
2	2 (green)

   These numbers are punched in either Arabic or Roman numerals.

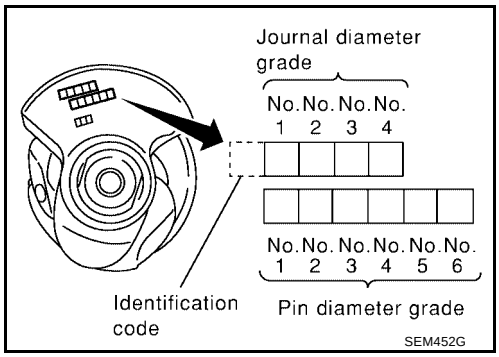

Method B (Using Plastigage)

- Remove oil and dust on the crankshaft pin and the surfaces of each bearing completely.
- Cut a Plastigage slightly shorter than the bearing width, and place it in crankshaft axial direction, avoiding oil holes.
- Install the connecting rod bearings to the connecting rod cap, and tighten the connecting rod nuts to the specified torque.

  CAUTION:
  Never rotate the crankshaft.

- Remove the connecting rod cap and bearings, and using the scale on the Plastigage bag, measure the Plastigage width.

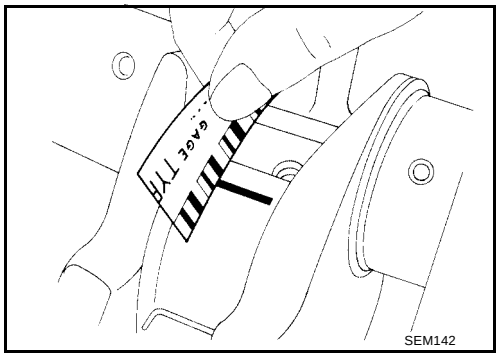

NOTE:
The procedure when the measured value exceeds the repair limit is same as that described in "Method A (Using Bore Gauge and Micrometer)".

DRIVE PLATE RUNOUT (A/T)

Runout (Total Indicator Reading):

Drive plate (A/T)	
torque converter surface	**: less than 0.35mm (.0138 in)**
Ring gear	**: less than 0.5mm ((.0197 in)**

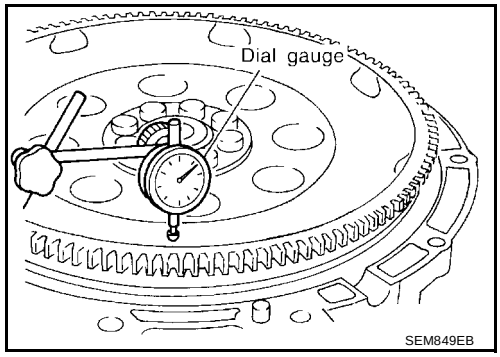

CAUTION:

- **The signal plate is built into the drive assembly. Be careful not to damage the signal plate, particularly the teeth.**
- **Check the drive plate and signal plate for deformation or cracks.**
- **Keep any magnetized objects away from the signal plate, particularly the teeth.**

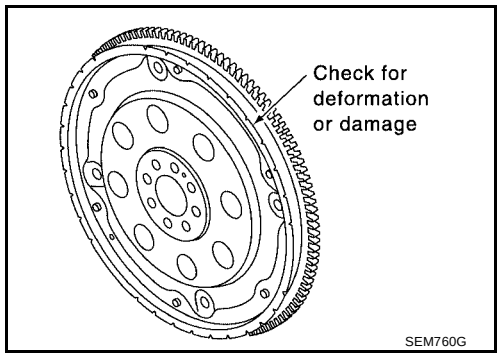

FLYWHEEL RUNOUT (M/T)

NOTE:

- This inspection is for double mass flywheel only.
- Do not disassemble the double mass flywheel.

Flywheel Deflection

- Measure the deflection of the flywheel contact surface to the clutch with a dial gauge.
- Measure the runout at 210 mm (8.27 in) diameter.

Limit : 0.45 mm (0.0177 in) or less under no load

- When measured value exceeds the limit, replace the flywheel with a new one.
- Measure axial displacement at 250mm (9.84 in) diameter.

Limit : 1.3mm (.051 in) or less under 100N (22.48 lb) force

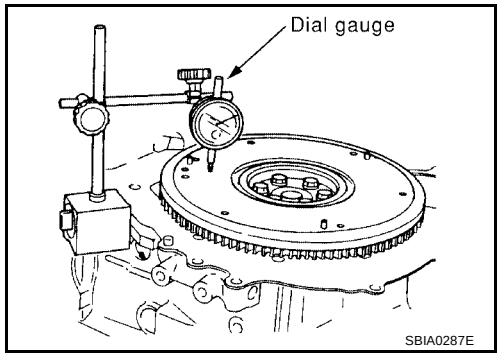

Movement Around in Rotation Direction

Check the movement amount with the following procedure:

1. Install a bolt to clutch cover mounting hole and place a torque wrench on the extended line of the flywheel center line.
   - Tighten the bolt at a force of 9.8 N·m (1 kg-m, 87 in-lb) to keep it from loosening.
2. Put a mating mark on the circumference of the two flywheel masses without applying any load (measurement standard points).
3. Apply a force of 9.8 N·m (1 kg-m, 87 in-lb) in each direction, and mark the movement amount on the mass on the transaxle side.

4. Measure dimensions of movement amounts A and B on the circumference of the flywheel on the transaxle side.

Flywheel movement in rotation direction	**: 20.22 mm (0.796 in) or less**

- When the measured value exceeds the standard, replace the flywheel.

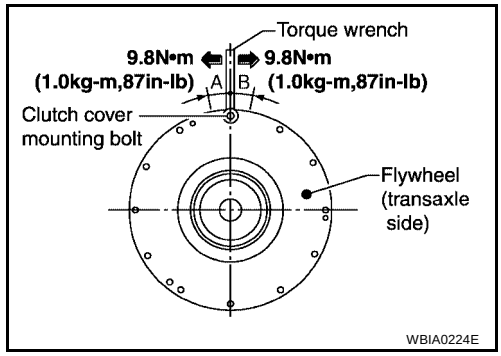

OIL JET

- Check nozzle for deformation and damage.
- Blow compressed air from nozzle, and check for clogs.
- If it is not satisfied, replace oil jet.

OIL JET RELIEF VALVE

- Using a clean plastic stick, press check valve in oil jet relief valve. Make sure that valve moves smoothly with proper reaction force.
- If it is not satisfied, replace oil jet relief valve.

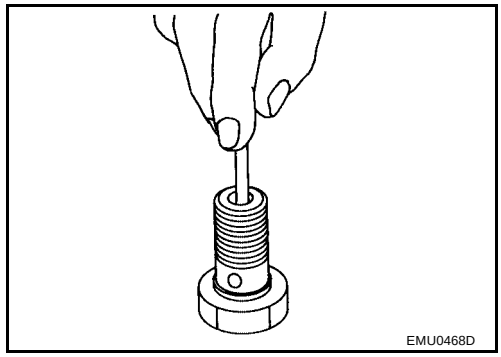

SERVICE DATA AND SPECIFICATIONS (SDS)

PFP:00100

Standard and Limit

EBS00J6H

GENERAL SPECIFICATIONS

Cylinder arrangement		V-6
Displacement cm^3 (in^3)		3,498 (213.45)
Bore and stroke mm (in)		95.5 x 81.4 (3.76 x 3.205)
Valve arrangement		DOHC
Firing order		1-2-3-4-5-6
Number of piston rings	Compression	2
	Oil	1
Number of main bearings		4
Compression ratio		10.0:1
Compression pressure kPa (kg/cm^2, psi)/300 rpm	Standard	1,275 (13.0, 185)
	Minimum	981 (10.0, 142)
	Differential limit between cylinders	98 (1.0, 14)
Cylinder number	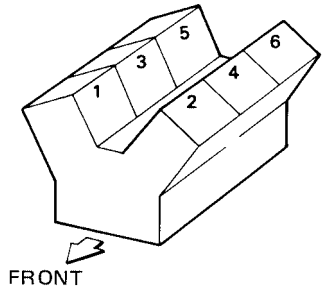 SEM713A	
Valve timing (IVTC - OFF)	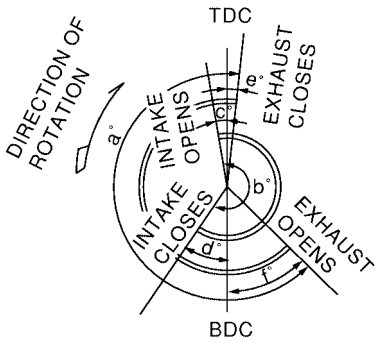 PBIC0187E	

Unit: degree

a	b	c	d	e	f
240°	238°	- 6°	64°	8°	52°

DRIVE BELT

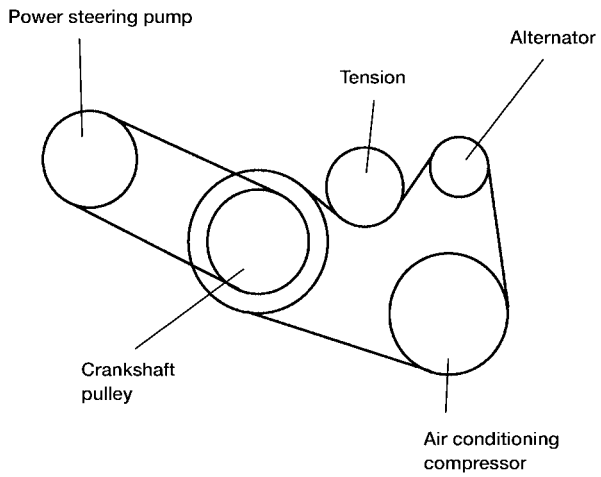

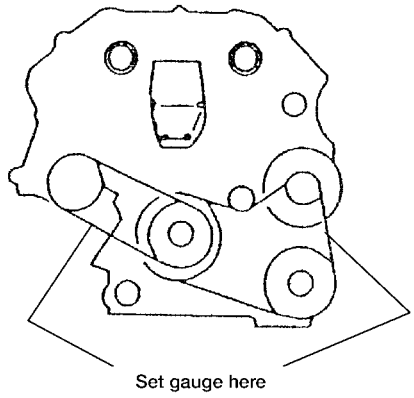

LBIA0076E

	Deflection adjustment		Unit: mm (in)	Tension adjustment*		Unit: N (kg, lb)
	Used belt		New belt	Used belt		New belt
	Limit	After adjustment		Limit	After adjustment	
Alternator and air conditioning compressor	7 (0.28)	4.2 - 4.6 (0.17 - 0.18)	3.7 - 4.1 (0.15 - 0.16)	294 (30, 66)	730 - 818 (74.5 - 83.5, 164 - 184)	838 - 926 (85.5 - 94.5, 188 - 208)
Power steering pump	11 (0.43)	7.3 - 8 (0.29 - 0.30)	6.5 - 7.2 (0.26 - 0.28)	196 (20, 44)	495 - 583 (50.5 - 59.5, 111 - 131)	603 - 691 (61.5 - 70.5, 135.6 - 155.4)
Applied pushing force	98 (10, 22)			—		

*: If belt tension gauge cannot be installed at check points shown, check drive belt tension at different location on the belt.

INTAKE MANIFOLD AND EXHAUST MANIFOLD

Unit: mm (in)

Item		Limit
Surface distortion	Intake manifold collector	0.1 (0.004)
	Intake manifold	0.1 (0.004)
	Exhaust manifold	0.3 (0.012)

SPARK PLUG

Make		NGK
Type	Standard type	PLFR5A-11
	Hot type	PLFR4A-11
	Cold type	PLFR6A-11
Gap (nominal)		1.1 mm (0.043 in)

CYLINDER HEAD

Unit: mm (in)

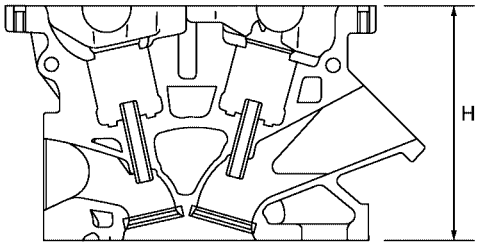

PBIC0924E

	Standard	Limit
Head surface distortion	Less than 0.03 (0.0012)	0.1 (0.004)
Normal cylinder head height "H"	—	126.3 - 126.5 (4.972 - 4.980)

VALVE

Valve Dimensions

Unit: mm (in)

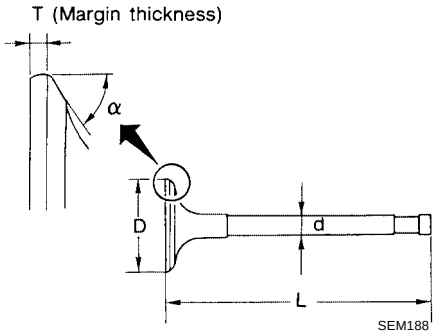

SEM188

Valve head diameter “D”	Intake	37.0 - 37.3 (1.4567 - 1.4685)
	Exhaust	31.2 - 31.5 (1.228 - 1.240)
Valve length “L”	Intake	96.46 (3.7976)
	Exhaust	9681 (3.8114)
Valve stem diameter “d”	Intake	5.965 - 5.980 (0.2348 - 0.2354)
	Exhaust	5.945 - 5.960 (0.2341 - 0.2346)
Valve seat angle “α”	Intake	45°15′ - 45°45′
	Exhaust	
Valve margin “T”	Intake	1.15 - 1.45 (0.0453 - 0.0571)
	Exhaust	1.45 - 1.75 (0.0571 - 0.0689)
Valve margin “T” limit		More than 0.5 (0.020)
Valve stem end surface grinding limit		Less than 0.2 (0.008)

Valve Clearance

Unit: mm (in)

	Cold	Hot* (reference data)
Intake	0.26 - 0.34 (0.010 - 0.013)	0.304 - 0.416 (0.012 - 0.016)
Exhaust	0.29 - 0.37 (0.011 - 0.015)	0.308 - 0.432 (0.012 - 0.017)

*: Approximately 80°C (176°F)

Valve Spring

Free height mm (in)		46.52 (1.8315)
Pressure N (kg, lb) at height mm (in)	Standard	184 - 208 (18.8 - 21.2, 41.4 - 46.8) at 37.0 (1.457)
	Limit	407 - 459 (41.5 - 46.8, 91.5 - 103.2) at 28.2 (1.110)
Out-of-square mm (in)		Less than 2.0 (0.079)

Valve Lifter

Unit: mm (in)

Valve lifter outer diameter	33.977 - 33.987 (1.3377 - 1.3381)
Lifter lifter bore diameter	34.000 - 34.016 (1.3386 - 1.3392)
Clearance between lifter and lifter guide	0.013 - 0.039 (0.0005 - 0.0015)

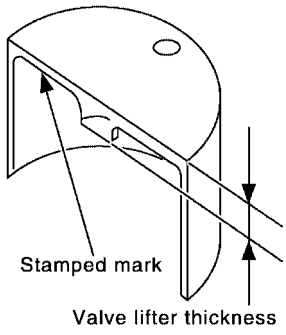

Identification Mark	Thickness mm (in)
788C	7.88 (0.3102)
790C	7.90 (0.3110)
792C	7.92 (0.3118)
794C	7.94 (0.3126)
796C	7.96 (0.3134)
798C	7.98 (0.3142)
800C	8.00 (0.3150)
802C	8.02 (03.157)
804C	8.04 (0.3165)
806C	8.06 (0.3173)
808C	8.08 (0.3181)
810C	8.10 (0.3189)
812C	8.12 (0.3197)
814C	8.14 (0.3205)
816C	8.16 (0.3213)
818C	8.18 (0.3220)
820C	8.20 (0.3228)
822C	8.22 (0.3236)
824C	8.24 (0.3244)
826C	8.26 (0.3252)
828C	8.28 (0.3260)
830C	8.30 (0.3268)
832C	8.32 (0.3276)
834C	8.34 (0.3283)
836C	8.36 (0.3291)

Valve Guide

Unit: mm (in)

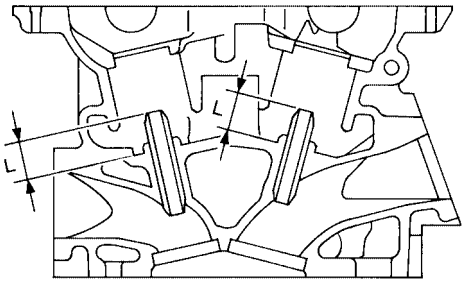

SEM950E

		Standard	Service
Valve guide	Outer diameter	10.023 - 10.034 (0.3946 - 0.3950)	10.223 - 10.234 (0.4025 - 0.4029)
Valve guide	Inner diameter (Finished size)	6.000 - 6.018 (0.2362 - 0.2369)	
Cylinder head valve guide hole diameter		9.975 - 9.996 (0.3927 - 0.3935)	10.175 - 10.196 (0.4006 - 0.4014)
Interference fit of valve guide		0.027 - 0.059 (0.0011 - 0.0023)	
		Standard	Limit
Valve to valve guide clearance	Intake	0.020 - 0.053 (0.0008 - 0.0021)	0.08 (0.0031)
	Exhaust	0.040 - 0.073 (0.0016 - 0.0029)	0.1 (0.004)
Valve deflection	Intake	—	0.24 (0.0094)
	Exhaust	—	0.28 (0.0110)
Projection length “L”		12.6 - 12.8 (0.496 - 0.504)	

Valve Seat

Unit: mm (in)

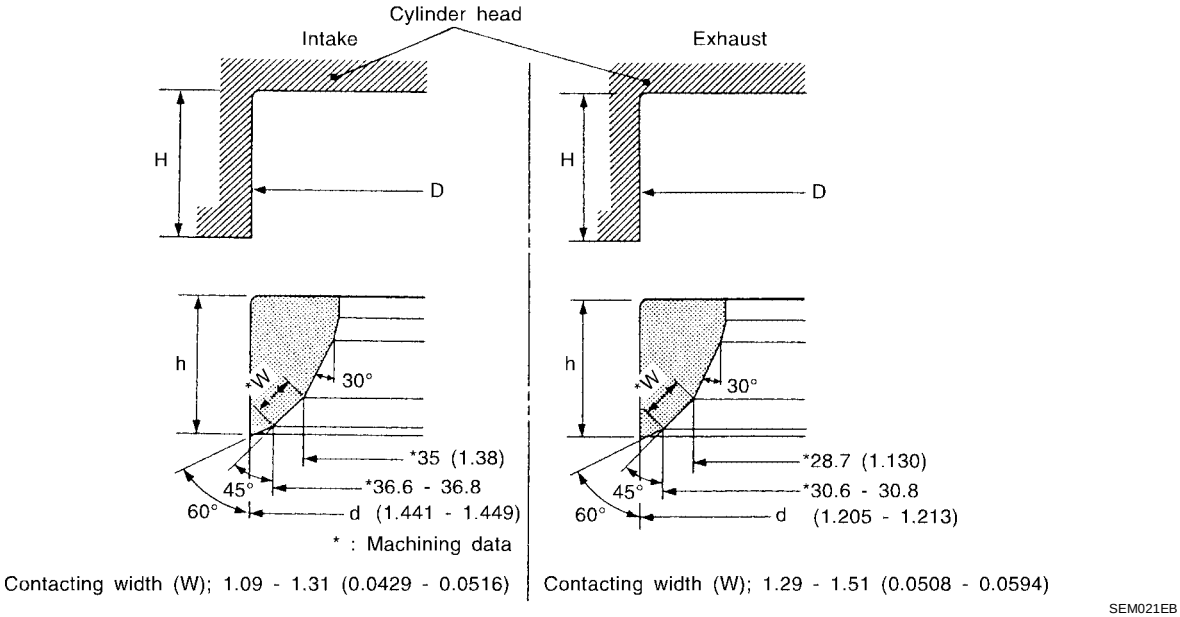

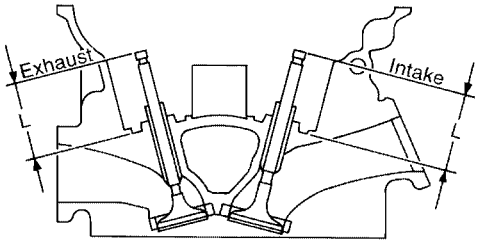

		Standard	Service
Cylinder head seat recess diameter (D)	Intake	38.000 - 38.016 (1.4961 - 1.4967)	38.500 - 38.516 (1.5157 - 1.5164)
	Exhaust	32.200 - 32.216 (1.2677 - 1.2683)	32.700 - 32.716 (1.2874 - 1.2880)
Valve seat interference fit	Intake	0.081 - 0.113 (0.0032 - 0.0044)	
	Exhaust	0.064 - 0.096 (0.0025 - 0.0038)	
Valve seat outer diameter (d)	Intake	38.097 - 38.113 (1.4999 - 1.5005)	38.597 - 38.613 (1.5196 - 1.5202)
	Exhaust	32.280 - 32.296 (1.2709 - 1.2715)	32.780 - 32.796 (1.2905 - 1.2912)
Height (h)	Intake	5.9 - 6.0 (0.232 - 0.236)	5.05 - 5.15 (0.1988 - 0.2028)
	Exhaust	5.9 - 6.0 (0.232 - 0.236)	4.95 - 5.05 (0.1949 - 0.1988)
Depth (H)		5.9 - 6.1 (0.232 - 0.240)	
Depth (L)	Intake	41.07 - 41.67 (1.6169 - 1.6405)	
	Exhaust	41.00 - 41.60 (1.6142 - 1.6378)	

CAMSHAFT AND CAMSHAFT BEARING

Unit: mm (in)

	Standard	Limit
Camshaft journal to bearing clearance	No. 1 0.045 - 0.086 (0.0018 - 0.0034) No. 2, 3, 4 0.035 - 0.076 (0.0014 - 0.0030)	0.15 (0.0059)
Inner diameter of camshaft bearing	No. 1 26.000 - 26.021 (1.0236 - 1.0244) No. 2, 3, 4 23.500 - 23.521 (0.9252 - 0.9260)	—
Outer diameter of camshaft journal	No. 1 25.935 - 25.955 (1.0211 - 1.0218) No. 2, 3, 4 23.445 - 23.465 (0.9230 - 0.9238)	—
Camshaft runout [TIR*]	Less than 0.02 (0.0008)	0.05 (0.0020)
Camshaft sprocket runout [TIR*]	Less than 0.15 (0.0059)	—
Camshaft end play	0.115 - 0.188 (0.0045 - 0.0074)	0.24 (0.0094)

*: Total indicator reading

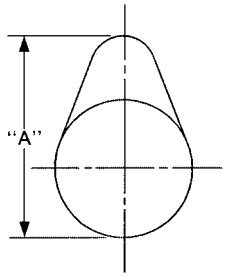

SEM671

Cam lobe height "A"	Intake and exhaust	44.465 - 44.655 (1.7506 - 1.7581)
Wear limit of cam lobe height		0.2 (0.008)

CYLINDER BLOCK

Unit: mm (in)

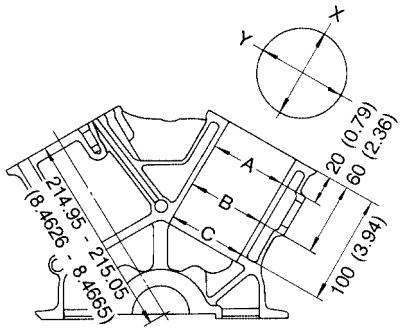

SEM022EA

Surface distortion	Standard			Less than 0.03 (0.0012)
	Limit			0.10 (0.0039)
Cylinder bore	Inner diameter	Standard	Grade No. 1	95.500 - 95.510 (3.7598 - 3.7602)
			Grade No. 2	95.510 - 95.520 (3.7602 - 3.7606)
			Grade No. 3	95.520 - 95.530 (3.7606 - 3.7610)
		Wear limit		0.20 (0.0079)
Out-of-round (Difference between X and Y)				Less than 0.015 (0.0006)

Taper (Difference between A and C)		Less than 0.015 (0.0006)
Main journal inner diameter grade (Without bearing)	Grade No. A	63.993 - 63.994 (2.5194 - 2.5194)
	Grade No. B	63.994 - 63.995 (2.5194 - 2.5195)
	Grade No. C	63.995 - 63.996 (2.5195 - 2.5195)
	Grade No. D	63.996 - 63.997 (2.5195 - 2.5196)
	Grade No. E	63.997 - 63.998 (2.5196 - 2.5196)
	Grade No. F	63.998 - 63.999 (2.5196 - 2.5196)
	Grade No. G	63.999 - 64.000 (2.5196 - 2.5197)
	Grade No. H	64.000 - 64.001 (2.5197 - 2.5197)
	Grade No. J	64.001 - 64.002 (2.5197 - 2.5198)
	Grade No. K	64.002 - 64.003 (2.5198 - 2.5198)
	Grade No. L	64.003 - 64.004 (2.5198 - 2.5198)
	Grade No. M	64.004 - 64.005 (2.5198 - 2.5199)
	Grade No. N	64.005 - 64.006 (2.5199 - 2.5199)
	Grade No. P	64.006 - 64.007 (2.5199 - 2.5200)
	Grade No. R	64.007 - 64.008 (2.5200 - 2.5200)
	Grade No. S	64.008 - 64.009 (2.5200 - 2.5200)
	Grade No. T	64.009 - 64.010 (2.5200 - 2.5201)
	Grade No. U	64.010 - 64.011 (2.5201 - 2.5201)
	Grade No. V	64.011 - 64.012 (2.5201 - 2.5202)
	Grade No. W	64.012 - 64.013 (2.5202 - 2.5202)
	Grade No. X	64.013 - 64.014 (2.5202 - 2.5202)
	Grade No. Y	64.014 - 64.015 (2.5202 - 2.5203)
	Grade No. 4	64.015 - 64.016 (2.5203 - 2.5203)
	Grade No. 7	64.016 - 64.017 (2.5203 - 2.5203)
Difference in inner diameter between cylinders	Standard	Less than 0.03 (0.0012)

PISTON, PISTON RING AND PISTON PIN

Available Piston

Unit: mm (in)

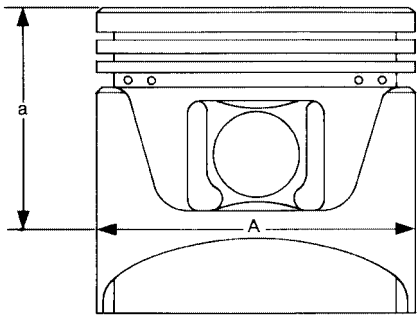

SEM882E

Piston skirt diameter “A”	Standard	Grade No. 1	95.480 - 95.490 (3.7590 - 3.7594)
		Grade No. 2	95.490 - 95.500 (3.7594 - 3.7598)
		Grade No. 3	95.500 - 95.510 (3.7598 - 3.7602)
		0.20 (0.0079) oversize (Service)	95.680 - 95.710 (3.7669 - 3.7681)
“a” dimension			41.0 (1.614)
Piston pin hole diameter		Grade No. 0	21.993 - 21.999 (0.8659 - 0.8661)
		Grade No. 1	21.999 - 22.005 (0.8661 - 0.8663)
Piston-to-bore clearance to cylinder block			0.010 - 0.030 (0.0004 - 0.0012)

Piston Ring

Unit: mm (in)

		Standard	Limit
Side clearance	Top	0.045 - 0.080 (0.0018 - 0.0031)	0.11 (0.0043)
	2nd	0.030 - 0.070 (0.0012 - 0.0028)	0.1 (0.004)
	Oil ring	0.065 - 0.135 (0.0026 - 0.0053)	—
End gap	Top	0.23 - 0.33 (0.0091 - 0.0130)	0.54 (0.0213)
	2nd	0.33 - 0.48 (0.0130 - 0.0189)	0.80 (0.0315)
	Oil (rail ring)	0.20 - 0.50 (0.0079 - 0.0197)	0.95 (0.0374)

Piston Pin

Unit: mm (in)

Piston pin outer diameter	Grade No. 0	21.989 - 21.995 (0.8657 - 0.8659)
	Grade No. 1	21.995 - 22.001 (0.8659 - 0.8662)
Interference fit of piston pin to piston		0.002 - 0.006 (0.0001 - 0.0002)
Piston pin to connecting rod bushing oil clearance	Standard	0.005 - 0.017 (0.0002 - 0.0007)
	Limit	0.030 (0.0012)

*: Values measured at ambient temperature of 20°C (68°F)

CONNECTING ROD

Unit: mm (in)

Center distance		144.15 - 144.25 (5.6752 - 5.6791)
Bend [per 100 (3.94)]	Limit	0.15 (0.0059)
Torsion [per 100 (3.94)]	Limit	0.30 (0.0118)
Connecting rod small end inner diameter		23.980 - 24.000 (0.9441 - 0.9449)
Piston pin bushing inner diameter*	Grade No. 0	22.000 - 22.006 (0.8661 - 0.8664)
	Grade No. 1	22.006 - 22.012 (0.8664 - 0.8666)
Connecting rod big end inner diameter		55.000 - 55.013 (2.1654 - 2.1659)
Side clearance	Standard	0.20 - 0.35 (0.0079 - 0.0138)
	Limit	0.40 (0.0157)

*: After installing in connecting rod

CRANKSHAFT

Unit: mm (in)

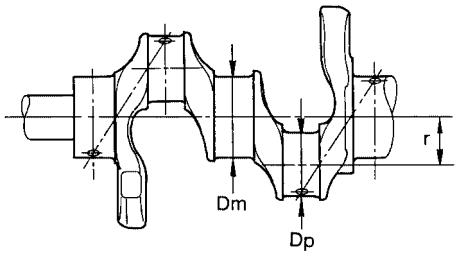

SEM645

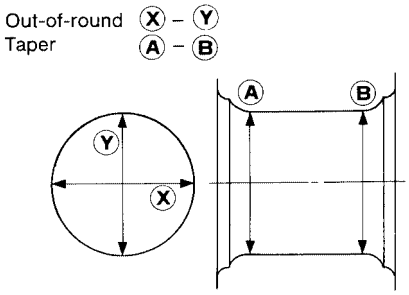

SEM715

Main journal dia. “Dm” grade	Grade No. A	59.975 - 59.974 (2.3612 - 2.3612)
	Grade No. B	59.974 - 59.973 (2.3612 - 2.3611)
	Grade No. C	59.973 - 59.972 (2.3611 - 2.3611)
	Grade No. D	59.972 - 59.971 (2.3611 - 2.3611)
	Grade No. E	59.971 - 59.970 (2.3611 - 2.3610)
	Grade No. F	59.970 - 59.969 (2.3610 - 2.3610)
	Grade No. G	59.969 - 59.968 (2.3610 - 2.3609)
	Grade No. H	59.968 - 59.967 (2.3609 - 2.3609)
	Grade No. J	59.967 - 59.966 (2.3609 - 2.3609)
	Grade No. K	59.966 - 59.965 (2.3609 - 2.3608)
	Grade No. L	59.965 - 59.964 (2.3608 - 2.3608)
	Grade No. M	59.964 - 59.963 (2.3608 - 2.3607)
	Grade No. N	59.963 - 59.962 (2.3607 - 2.3607)
	Grade No. P	59.962 - 59.961 (2.3607 - 2.3607)
	Grade No. R	59.961 - 59.960 (2.3607 - 2.3606)
	Grade No. S	59.960 - 59.959 (2.3606 - 2.3606)
	Grade No. T	59.959 - 59.958 (2.3606 - 2.3605)
	Grade No. U	59.958 - 59.957 (2.3605 - 2.3605)
	Grade No. V	59.957 - 59.956 (2.3605 - 2.3605)
	Grade No. W	59.956 - 59.955 (2.3605 - 2.3604)
	Grade No. X	59.955 - 59.954 (2.3604 - 2.3604)
	Grade No. Y	59.954 - 59.953 (2.3604 - 2.3603)
	Grade No. 4	59.953 - 59.952 (2.3603 - 2.3603)
	Grade No. 7	59.952 - 59.951 (2.3603 - 2.3603)
Pin journal dia. “Dp”	Grade No. 0	51.968 - 51.974 (2.0460 - 2.0462)
	Grade No. 1	51.962 - 51.968 (2.0457 - 2.0460)
	Grade No. 2	51.956 - 51.962 (2.0445 - 2.0457)
Center distance “r”		40.36 - 40.44 (1.5890 - 1.5921)
Out-of-round (Difference between X and Y)	Standard	Less than 0.002 (0.0001)
Taper (Difference between A and B)	Standard	Less than 0.002 (0.0001)
Runout [TIR*]	Limit	Less than 0.10 (0.0039)
End play	Standard	0.10 - 0.25 (0.0039 - 0.0098)
	Limit	0.30 (0.0118)

*: Total indicator reading

AVAILABLE MAIN BEARING

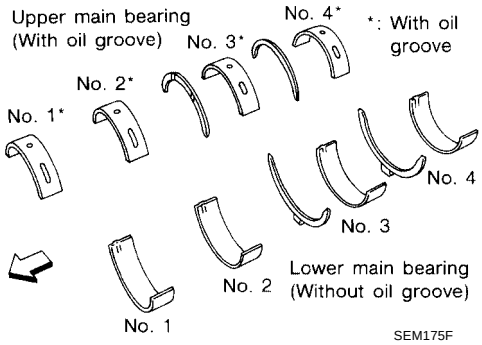

Grade number		Thickness "T" mm (in)	Width "W" mm (in)	Identification color (UPR/LWR)	Remarks
0		2.000 - 2.003 (0.0787 - 0.0789)	19.9 - 20.1 (0.783 - 0.791)	Black	Grade is the same for upper and lower bearings.
1		2.003 - 2.006 (0.0789 - 0.0790)		Brown	
2		2.006 - 2.009 (0.0790 - 0.0791)		Green	
3		2.009 - 2.012 (0.0791 - 0.0792)		Yellow	
4		2.012 - 2.015 (0.0792 - 0.0793)		Blue	
5		2.015 - 2.018 (0.0793 - 0.0794)		Pink	
6		2.018 - 2.021 (0.0794 - 0.0796)		Purple	
7		2.021 - 2.024 (0.0796 - 0.0797)		White	
01	UPP	2.003 - 2.006 (0.0789 - 0.0790)		Brown/Black	Grade is different for upper and lower bearings.
	LWR	2.000 - 2.003 (0.0787 - 0.0789)			
12	UPR	2.006 - 2.009 (0.0790 - 0.0791)		Green/Brown	
	LWR	2.003 - 2.006 (0.0789 - 0.0790)			
23	UPR	2.009 - 2.012 (0.0791 - 0.0792)		Yellow/Green	
	LWR	2.006 - 2.009 (0.0790 - 0.0791)			
34	UPR	2.012 - 2.015 (0.0792 - 0.0793)		Blue/Yellow	
	LWR	2.009 - 2.012 (0.0791 - 0.0792)			
45	UPR	2.015 - 2.018 (0.0793 - 0.0794)		Pink/Blue	
	LWR	2.012 - 2.015 (0.0792 - 0.0793)			
56	UPR	2.018 - 2.021 (0.0794 - 0.0796)		Purple/Pink	
	LWR	2.015 - 2.018 (0.0793 - 0.0794)			
67	UPR	2.021 - 2.024 (0.0796 - 0.0797)		White/Purple	
	LWR	2.018 - 2.021 (0.0794 - 0.0796)			

Undersize

Unit: mm (in)

	Thickness	Main journal diameter "Dm"
0.25 (0.0098)	2.132 - 2.140 (0.0839 - 0.0843)	Grind so that bearing clearance is the specified value.

CONNECTING ROD BEARING

Grade number	Thickness "T" mm (in)	Identification color (mark)
0	1.500 - 1.503 (0.0591 - 0.0592)	Black
1	1.503 - 1.506 (0.0592 - 0.0593)	Brown
2	1.506 - 1.509 (0.0593 - 0.0594)	Green

Undersize

Unit: mm (in)

	Thickness	Crank pin journal diameter “Dp”
0.25 (0.0098)	1.626 - 1.634 (0.0640 - 0.0643)	Grind so that bearing clearance is the specified value.

MISCELLANEOUS COMPONENTS

Unit: mm (in)

Drive plate deflection [TIR]* - on torque converter mount surface	Less than 0.35 (0.0138)
Drive plate deflection [TIR]* - on ring gear	0.5 (0.0197)
Flywheel runout [TIR]* limit	Less than 0.45 (0.0177)
Flywheel axial displacement limit measured at 250mm (9.84 in)	Less than 1.3 (0.051) or less under 100N (22.48 lb) force.

*: Total indicator reading

BEARING CLEARANCE

Unit: mm (in)

Main bearing clearance	Standard	0.035 - 0.045 (0.0014 - 0.0018)*
	Limit	0.065 (0.0026)
Connecting rod bearing clearance	Standard	0.034 - 0.059 (0.0013 - 0.0023)*
	Limit	0.070 (0.0028)

*: Actual clearance