SUZUKI 2006

RENO

OWNER'S MANUAL

Keep With Vehicle At All Times.
Contains Important Information
On Safety, Operation & Maintenance.

SUZUKI
Caring for Customers

Part No. 99011-85Z12-03E
September, 2005 (英)

Downloaded from www.Manualslib.com manuals search engine

This owner's manual applies to the RENO series:

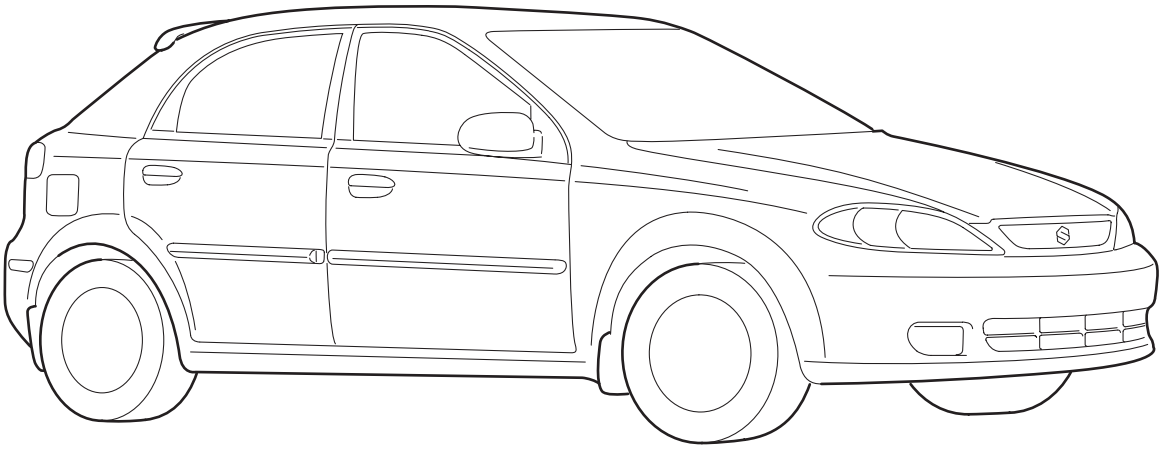

85Z005

NOTE: The illustrated model is one of the RENO series.

© COPYRIGHT SUZUKI MOTOR CORPORATION 2005

Downloaded from www.Manualslib.com manuals search engine

INTRODUCTION

Thank you for choosing SUZUKI and welcome to our growing family. Your choice was a wise one; SUZUKI products are a great value that will give you years of driving pleasure.

This Owner's Manual was prepared to help you have a safe, enjoyable, and trouble-free experience with your SUZUKI. In it you will learn about the vehicle's operation, its safety features and maintenance requirements. Please read it carefully before operating your vehicle. Afterwards, keep this Manual in the glove box for future reference.

Should you resell the vehicle, please leave this Manual with it for the next owner.

In addition to the Owner's Manual, the other booklets provided with your SUZUKI explain the vehicle's warranties. We recommend you read them as well to familiarize yourself with this important information.

When planning the regular scheduled maintenance of your SUZUKI, we recommend you visit your local SUZUKI dealership. Their factory-trained technicians will provide the best possible service and use only genuine SUZUKI parts and accessories.

SUZUKI MOTOR CORPORATION

Downloaded from www.Manualslib.com manuals search engine

SERVICE STATION GUIDE

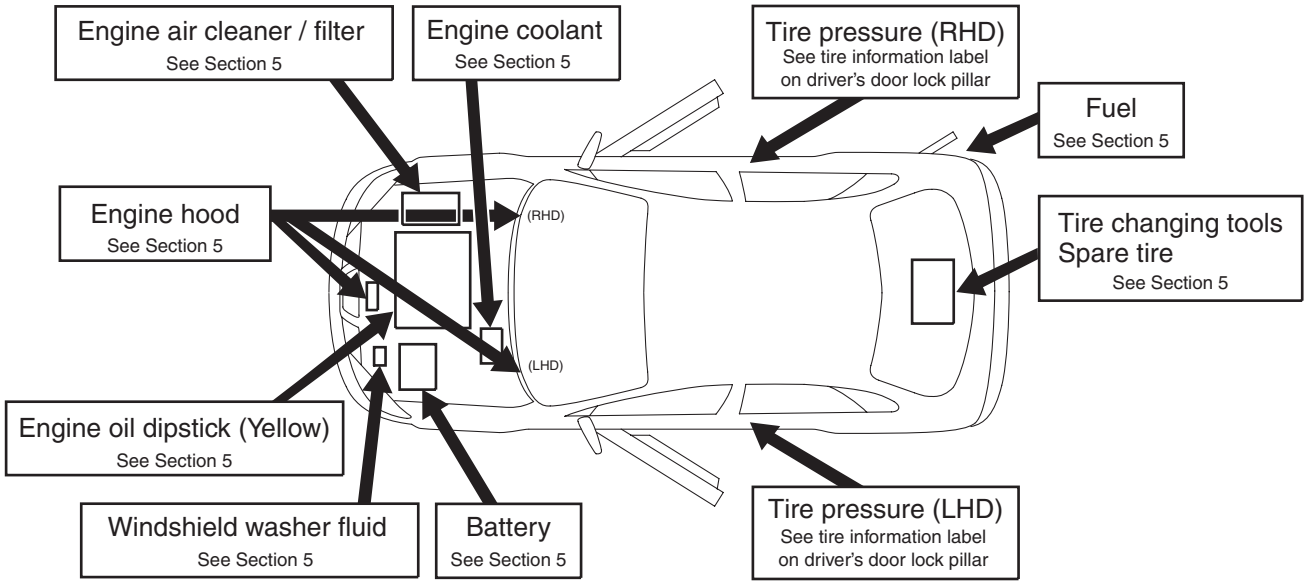

LHD: Left Hand Drive
RHD: Right Hand Drive

85Z006

NOTE: The illustration is RENO.

Downloaded from www.Manualslib.com manuals search engine

TABLE OF CONTENTS

California Proposition 65 Warning

⚠ WARNING

Engine exhaust, some of its constituents, and certain product components contain or emit chemicals known to the State of California to cause cancer and birth defects or other reproductive harm.

SEATS AND RESTRAINT SYSTEMS	1
FEATURES AND CONTROLS	2
INSTRUMENT PANEL	3
DRIVING YOUR VEHICLE	4
SERVICE AND APPEARANCE CARE	5
MAINTENANCE SCHEDULE	6
GENERAL INFORMATION	7
INDEX	8

Downloaded from www.Manualslib.com manuals search engine

LOCATION OF WARNING MESSAGES

Read and follow all of the warnings (labels etc.) on your vehicle. Make sure you understand all of them. Keep them on the vehicle. Do not remove the messages for any reason. If a label comes off or the messages become difficult to read, have it corrected by your SUZUKI dealer.

1. Air Bag Warning Label
2. Passenger Air Bag Warning Label
3. Passenger Safety Belt Warning Label
4. Rear Outboard Safety Belt Warning Label
5. Rear Center Safety Belt Warning Label
6. Jack Warning Label
7. Brake Reservoir Cap Warning Message
8. Cooling Fan Warning Label
9. Surge Tank Cap Warning Message
10. Air Conditioner Warning Label
11. Battery Label
12. Emission Label
13. Tire and Loading Information Label
14. Certification Label
15. Spare Tire Label
16. Side Air Bag Warning Label

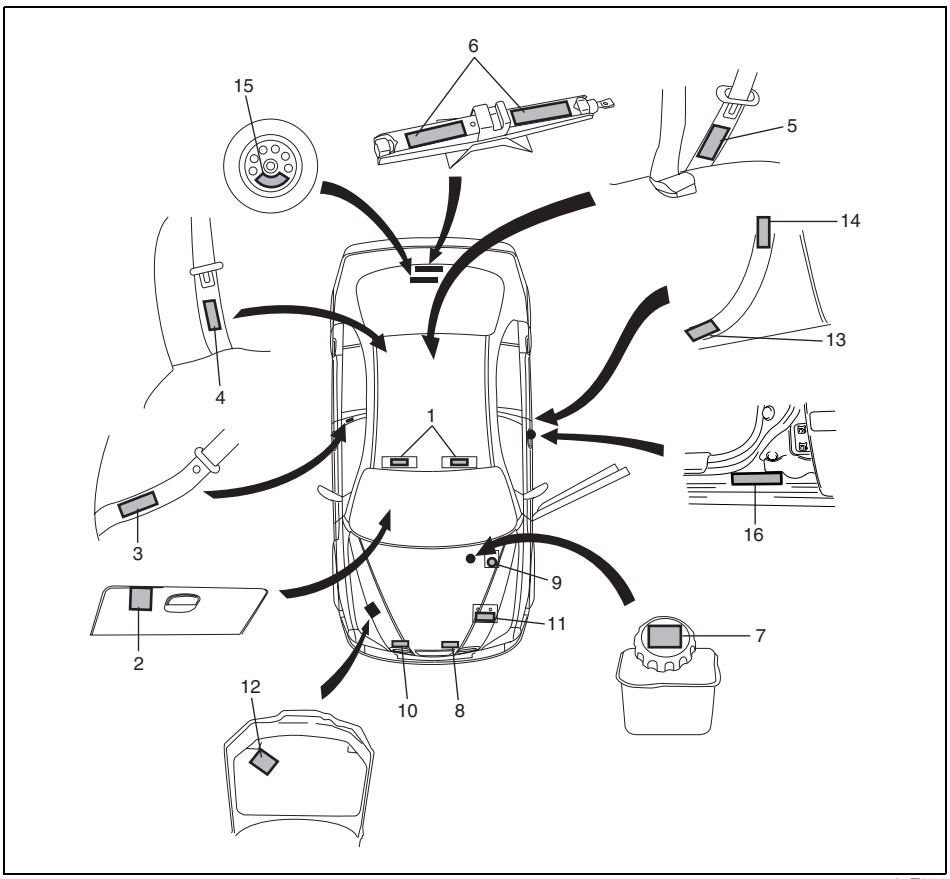

85Z004

Downloaded from www.Manualslib.com manuals search engine

FOREWORD

All information in this manual is based on the latest product information available at the time of publication. Due to improvements or other changes, there may be discrepancies between information in this manual and your vehicle. SUZUKI MOTOR CORPORATION reserves the right to make production changes at any time, without notice and without incurring any obligation to make the same or similar changes to vehicles previously built or sold.

SUZUKI MOTOR CORPORATION believes in conservation and protection of Earth's natural resources.

To that end, we encourage every vehicle owner to recycle, trade in, or properly dispose of, as appropriate, used motor oil, coolant, and other fluids, batteries and tires.

IF YOU HAVE ANY PROBLEMS WITH YOUR SUZUKI:

Please review the New Vehicle Warranty Information booklet supplied with your SUZUKI. Should you have a question or problem regarding the warranty or service of your vehicle, please take the following action:

Consult the Service Manager and the Owner of the Suzuki Automotive Dealership. Explain your problem and ask for their assistance in resolving your problem. The Owner of the dealership is in the very best position to assist you as he or she is vitally concerned with your continued satisfaction.

If you are still in need of additional information, or if you are dissatisfied, request that your dealer arrange a meeting with your District Service Manager.

If, after doing so, you still require further assistance, and you purchased your SUZUKI in the continental United States, please contact the American Suzuki Customer Relations Department by telephone at 1-800-934-0934 or in writing at:

American Suzuki Motor Corporation
Automotive Customer Relations
3251 East Imperial Highway
Brea, CA 92821-6795

If you purchased your SUZUKI in Canada please contact the Suzuki Canada Customer Relations Department by telephone at 1-905-889-2677 extension 2254 or in writing at:

Suzuki Canada Inc.
Customer Relations
100 East Beaver Creek Road
Richmond Hill, On
L4B 1J6

In the event you require assistance related to your SUZUKI, while temporarily travelling in either the United States or Canada, you may wish to contact the Suzuki Customer Relations Department directly of the country in which you are temporarily operating your vehicle.

Please be certain to provide us with the following information: the model, Vehicle Identification Number, mileage, accessories involved, event dates, your concern, and any other comments which you may have. When we receive your correspondence, we will be pleased to contact the Owner of your dealership and assist in resolving your concern.

For owners outside the continental United States, please refer to the distributor's address listed in your Warranty Information booklet.

SUZUKI MOTOR CORPORATION

Downloaded from www.Manualslib.com manuals search engine

IMPORTANT

⚠WARNING/CAUTION/*NOTE*

Please read this manual and follow its instructions carefully. To emphasize special information, the symbol ⚠ and the words **WARNING**, **CAUTION** and *NOTE* have special meanings. Pay special attention to the messages highlighted by these signal words:

⚠ WARNING

Indicates a potential hazard that could result in death or injury.

CAUTION

Indicates a potential hazard that could result in vehicle damage.

NOTE:
Indicates special information to make maintenance easier or instructions clearer.

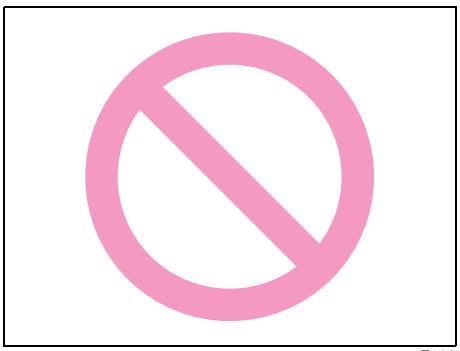

75F080

The circle with a slash in this manual means “Don’t do this” or “Don’t let this happen”.

MODIFICATION WARNING

⚠ WARNING

Do not modify this vehicle. Modification could adversely affect safety, handling, performance or durability and may violate governmental regulations. In addition, damage or performance problems resulting from modification may not be covered under warranty.

CAUTION

Improper installation of mobile communication equipment such as cellular telephones or CB (Citizen’s Band) radios may cause electronic interference with your vehicle’s ignition system, resulting in vehicle performance problems. Consult your SUZUKI dealer or qualified service technician for advice on installing such mobile communication equipment.

Downloaded from www.Manualslib.com manuals search engine

Vehicle Symbols

Your vehicle has components and labels that use symbols instead of text. Symbols, used on your vehicle, are shown along with the text describing the operation or information relating to a specific component, control, message, gauge or indicator.

If you need help figuring out a specific name of a component, gauge or indicator, reference the following topics:

- Seats and Restraint Systems in Section 1
- Features and Controls in Section 2
- Instrument Panel Overview in Section 3
- Climate Controls in Section 3
- Warning Lights, Gauges and Indicators in Section 3
- Audio System(s) in Section 3
- Engine Compartment Overview in Section 5

These are some examples of vehicle symbols you may find on your vehicle:

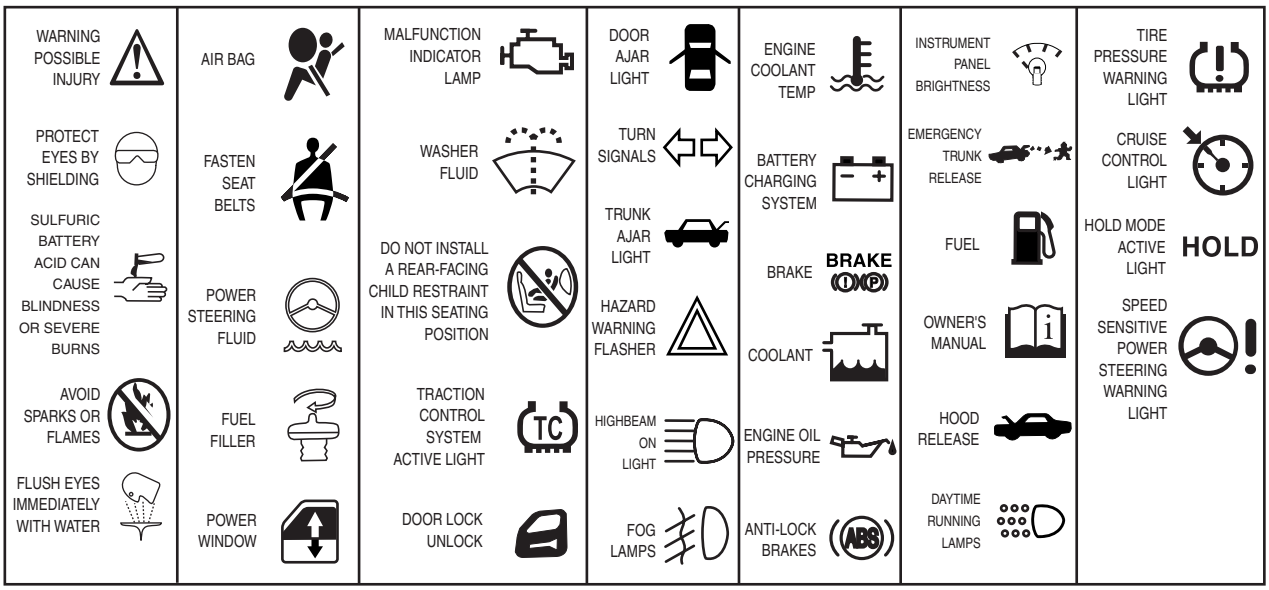

L3U0002CS

Downloaded from www.Manualslib.com manuals search engine

Downloaded from www.Manualslib.com manuals search engine

SEATS AND RESTRAINT SYSTEMS

Front Seats 1-1
Rear Seats 1-4
Safety Belts 1-5
Child Restraints 1-15
Supplemental Restraint System (air bags) 1-26
Restraint System Check 1-33

Downloaded from www.Manualslib.com manuals search engine

Front Seats

Manual Seats (With Sliding Storage Tray)

⚠ WARNING

Never attempt to adjust the driver's seat or seatback while driving. The seat or seatback could move unexpectedly, causing loss of control. Make sure that the driver's seat and seatback are properly adjusted before you start driving.

⚠ WARNING

To avoid excessive seat belt slack, which reduces the effectiveness of the seat belts as a safety device, make sure that the seats are adjusted before the seat belts are fastened.

If your vehicle has a sliding storage tray under the front seat, the manual seat lever looks like this.

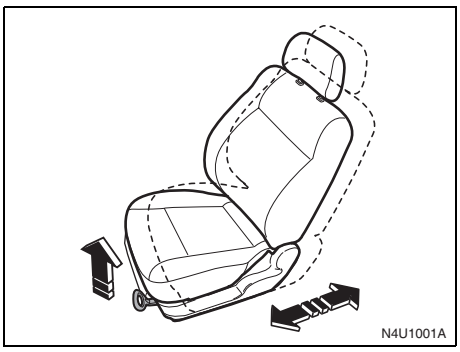

Pull up and hold the lever located under the front of the seat to unlock it. Slide the seat to where you want it and release the lever. Then try to move the seat forward or rearward to make sure the seat is locked into place.

Manual Seats (Without Sliding Storage Tray)

⚠ WARNING

Never attempt to adjust the driver's seat or seatback while driving. The seat or seatback could move unexpectedly, causing loss of control. Make sure that the driver's seat and seatback are properly adjusted before you start driving.

If your vehicle does not have a sliding storage tray under the front seat, the manual seat bar looks like this.

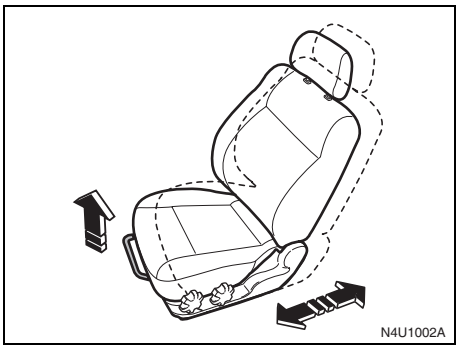

Pull up and hold the bar located under the front of the seat to unlock it. Slide the seat to where you want it and release the bar. Then try to move the seat with your body, to make sure the seat is locked into place.

Downloaded from www.Manualslib.com manuals search engine

Front Seats:

Driver Seat Height Adjuster

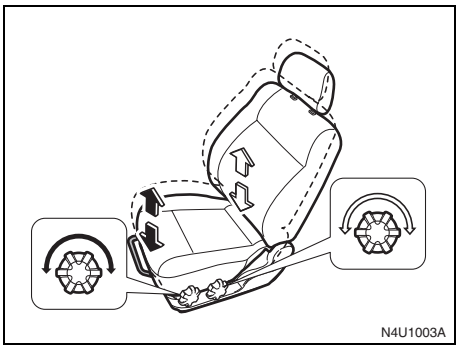

To adjust the height of the driver's seat cushion, turn the knobs located on the outboard side of the seat cushion.

Turn the front knob to adjust the height of the front portion of the seat cushion. Turn the rear knob to adjust the height of the rear portion of the seat cushion.

Manual Lumbar

Your vehicle may have manually operated lumbar support for the driver's seat.

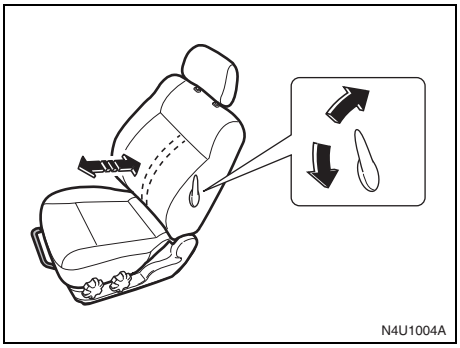

To adjust the front seat lumbar support, use the lever located on the outboard side of the seatback.

Push the lever down to adjust the support for the lower part of the seatback. Pull the lever up to return the support to its original position.

Reclining Seatbacks

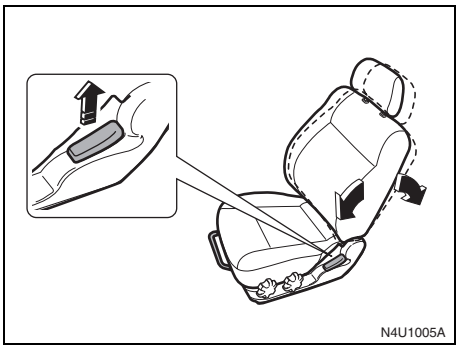

To adjust the seatback angle, lift the lever located on the outboard side of the seat and move the seatback to the desired position.

Release the lever and push rearward on the seatback to make sure it is locked.

Pull up on the lever without pushing on the seatback and the seatback will move to an upright position.

Downloaded from www.Manualslib.com manuals search engine

SEATS AND RESTRAINT SYSTEMS

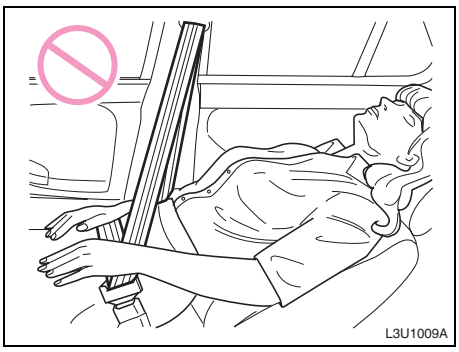

Do not have your a seatback reclined when your vehicle is moving.

⚠ WARNING

All seatbacks should always be in a fairly upright position when driving, or seat belt effectiveness may be reduced. Seat belts are designed to offer maximum protection when seatbacks are in the fully upright position.

Head Restraints

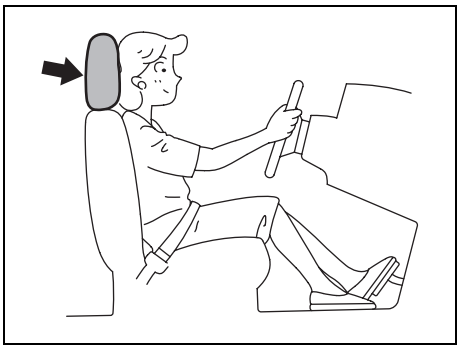

Head restraints are designed to help reduce the risk of neck injuries in case of an accident. Adjust the head restraint to the position which places the center of the head restraint closest to the top of your ears. If this is not possible for very tall passengers, adjust the head restraint as high as possible.

⚠ WARNING

- **Never drive the vehicle with the head restraints removed.**
- **Removed or improperly adjusted head restraints can result in serious head and neck injuries in case of collision.**
- **Do not attempt to adjust the head restraint while driving.**

Pull up the head restraint in order to adjust the position upward.

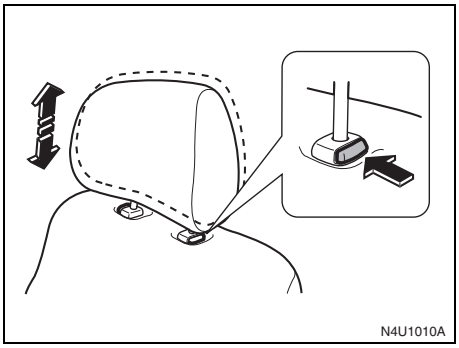

Push in the release button and press downward on the head restraint in order to adjust the position downward.

To remove the head restraint, pull the head restraint all the way up. Then push in the release button and lift the head restraint from the guide sleeve.

Replace the head restraint and reset it in the original position before driving.

The rear seat head restraints may also be adjusted.

Push in the release button and move the head restraint to the desired position.

Downloaded from www.Manualslib.com manuals search engine

Front Seats:
Rear Seats:

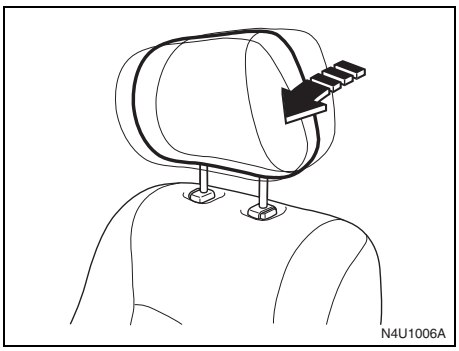

If your vehicle is equipped with the tiltable front head restraints, do the following to adjust it.

1) Place it in its upright position by pushing it forward fully and releasing it.
2) Push the head restraint forward carefully until it is adjusted to the desired position.

Rear Seats

Folding Rear Seat

Your vehicle has rear seatbacks that can be folded down to increase cargo space.

To fold down the seatback, do the following:

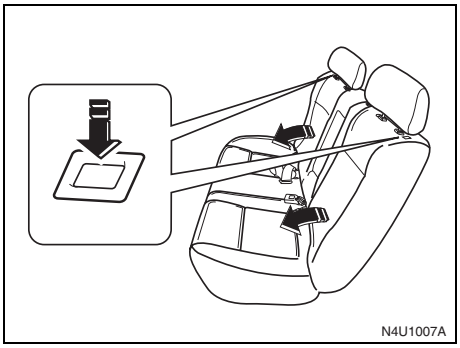

1) Push the rear head restraints as far down as possible.
2) Press down on the release button located on top of the rear seatback.
3) Fold the rear seatback forward and down.

To return the seatback to the upright position, do the following:

1) Lift up the seatback and push it to its original position. Ensure that the safety belts are not twisted or caught under the seatback.
2) Push back firmly on the top of the seatback until it latches securely in the fully upright position.

⚠ WARNING

If the seatback isn't locked, it could move forward in a sudden stop or crash. That could cause injury to the person sitting there. Always press rearward on the seatback to be sure it is locked.

⚠ WARNING

A safety belt that is improperly routed, not properly attached, or twisted won't provide the protection needed in a crash. The person wearing the belt could be severely injured. After raising the rear seatback, always check to be sure that the safety belts are properly routed and attached, and are not twisted.

Downloaded from www.Manualslib.com manuals search engine

⚠ WARNING

- **Do not stack luggage or other cargo higher than the front seats.**
- **Do not allow passengers to sit on the folded seatbacks while the vehicle is in motion.**
- **Unrestrained luggage or passengers on a folded seatback can be thrown about or ejected from the vehicle in a sudden stop or accident.**

Serious injuries or death can result.

Safety Belts

Safety Belt: They are for Everyone

This section of the manual tells you how to use safety belts properly. It also tells you some things you should not do with safety belts.

⚠ WARNING

Don't let anyone ride where he or she can't wear a safety belt properly. If you are in a crash and you're not wearing a safety belt, your injuries can be much worse. You can hit things inside the vehicle or be ejected from it. You can be severely injured or killed. In the same crash, you might not be, if you are buckled up. Always fasten your safety belt, and check that your passengers' belts are fastened properly too.

⚠ WARNING

It is extremely dangerous to ride in a cargo area, inside or outside of a vehicle. In a collision, people riding in these areas are more likely to be severely injured or killed. Do not allow people to ride in any area of your vehicle that is not equipped with seats and safety belts. Be sure everyone in your vehicle is in a seat and is using a safety belt properly.

Your vehicle has a light that comes on as a reminder to buckle up. See "Safety Belt Reminder Light" in section 3.

In most states and in all Canadian provinces, the law says to wear safety belts. Here's why: They work.

You never know if you'll be in a crash. If you do have a crash, you don't know if it will be a bad one.

A few crashes are mild, and some crashes can be so serious that even buckled up, a person wouldn't survive. But most crashes are in between. In many of them, people who buckle up can survive and sometimes walk away. Without belts they could have been badly hurt or killed.

After more than 30 years of safety belts in vehicles, the facts are clear. In most crashes buckling up does matter ... a lot!

Downloaded from www.Manualslib.com manuals search engine

Safety Belts:

Why Safety Belts Work
When you ride in or on anything, you go as fast as it goes.

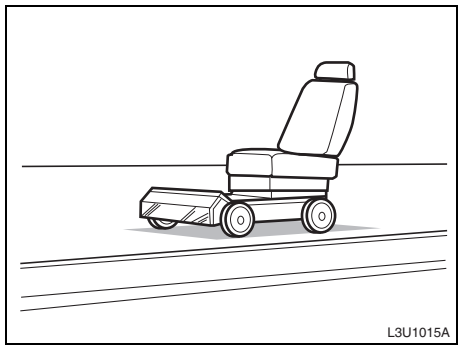

Take the simplest vehicle. Suppose it's just a seat on wheels.

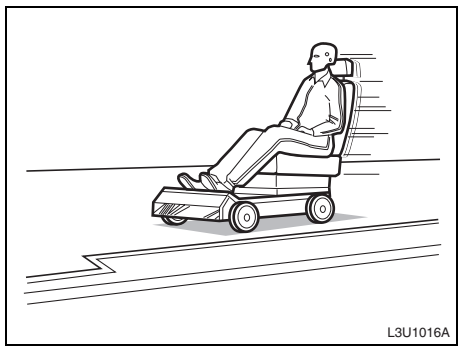

Put someone on it.

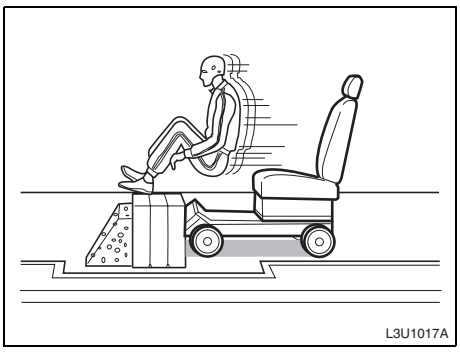

Get it up to speed. Then stop the vehicle. The rider doesn't stop.

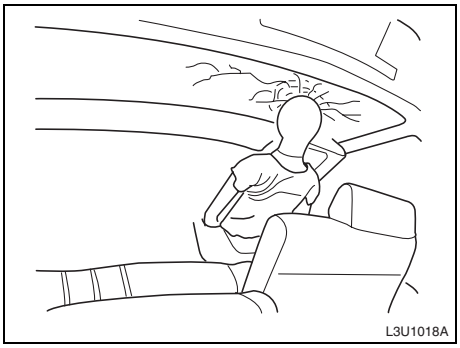

The person keeps going until stopped by something. In a real vehicle, it could be the windshield...

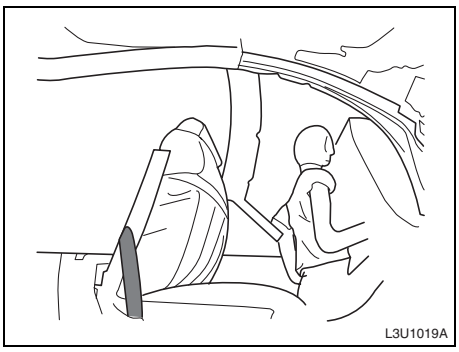

or the instrument panel...

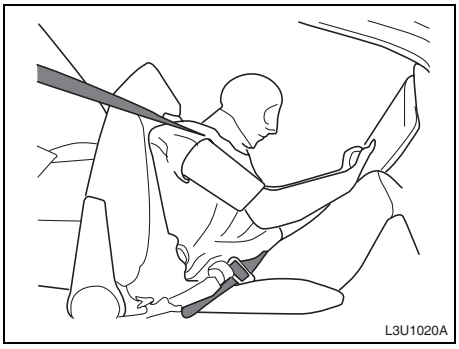

or the safety belts!

With safety belts, you slow down as the vehicle does. You get more time to stop. You stop over more distance, and your

Downloaded from www.Manualslib.com manuals search engine

strongest bones take the forces. That's why safety belts make such good sense.

Questions and Answers About Safety Belts

Question: Won't I be trapped in the vehicle after an accident if I'm wearing a safety belt?

Answer: You could be – whether you're wearing a safety belt or not. But you can unbuckle a safety belt, even if you're upside down. And your chance of being conscious during and after an accident, so you can unbuckle and get out, is much greater if you are belted.

Question: If my vehicle has air bags, why should I have to wear safety belts?

Answer: Air bags are in many vehicles today and will be in most of them in the future. But they are supplemental systems only; so they work with safety belts – not instead of them. Every air bag system ever offered for sale has required the use of safety belts. Even if you're in a vehicle that has air bags, you still have to buckle up to get the most protection. That's true not only in frontal collisions, but especially in side and other collisions.

Question: If I'm a good driver, and I never drive far from home, why should I wear safety belts?

Answer: You may be an excellent driver, but if you're in an accident – even one that isn't your fault – you and your passengers can be hurt. Being a good driver doesn't protect you from things beyond your control, such as bad drivers.

Most accidents occur within 25 miles (40 km) of home. And the greatest number of serious injuries and deaths occur at speeds of less than 40 mph (65 km/h).

Safety belts are for everyone.

How to Wear Safety Belts Properly

This section is only for people of adult size.

Be aware that there are special things to know about safety belts and children. And there are different rules for smaller children and babies. If a child will be riding in your vehicle, see "Older Children" or "Infants and Young Children" in this section. Follow those rules for everyone's protection.

First, you'll want to know which restraint systems your vehicle has.

We'll start with the driver position.

Driver Position

This section describes the driver's restraint system.

Lap-Shoulder Belt

The driver has a lap-shoulder belt. Here's how to wear it properly.

1) Close and lock the door.
2) Adjust the seat so you can sit up straight. To see how, see "Seats" in the Index.

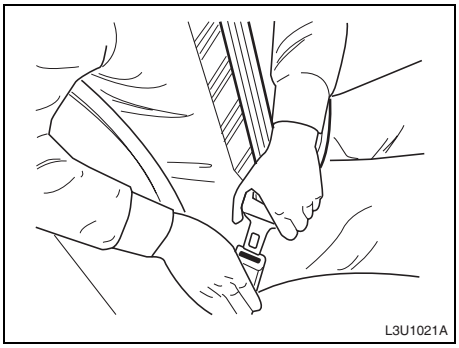

3) Pick up the latch plate and pull the belt across you. Don't let it get twisted.
   The shoulder belt may lock if you pull the belt across you very quickly. If this happens, let the belt go back slightly to unlock it. Then pull the belt across you more slowly.
4) Push the latch plate into the buckle until it clicks.
   Pull up on the latch plate to make sure it is secure.
   Make sure the release button on the buckle is positioned so you would be

Downloaded from www.Manualslib.com manuals search engine

able to unbuckle the safety belt quickly if you ever had to.

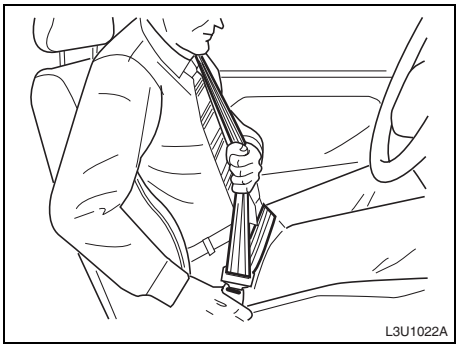

5) To make the lap part tight, pull down on the buckle end of the belt as you pull up on the shoulder belt.

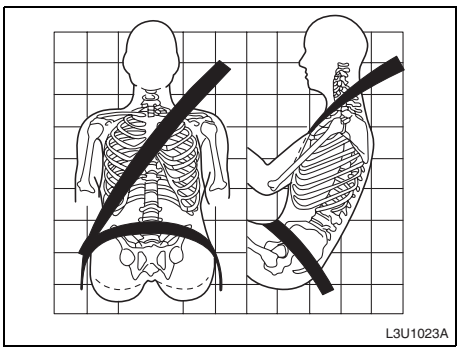

The lap part of the belt should be worn low and snug on the hips, just touching the thighs. In a crash, this applies force to the strong pelvic bones so you'd be less likely to slide under the lap belt. If you slid under it, the belt would apply force at your abdomen. This could cause serious or even fatal injuries. The shoulder belt should go over the shoulder and across the chest. These parts of the body are best able to take belt restraining forces.

The safety belt locks if there's a sudden stop or crash, or if you pull the belt very quickly out of the retractor.

Shoulder Belt Height Adjuster

Before you begin to drive, move the shoulder belt adjuster to the height that is right for you. Adjust the height so that the shoulder portion of the belt is centered on your shoulder. The belt should be away from your face and neck, but not falling off your shoulder.

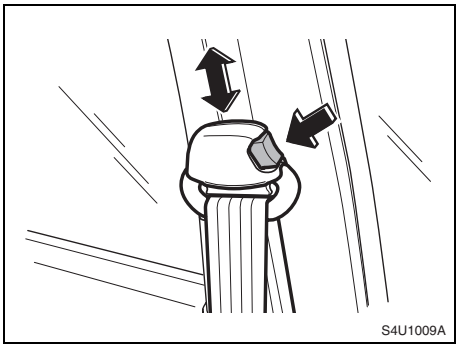

To move it down, squeeze the release button and move the height adjuster to the desired position. You can move the adjuster up just by pushing up on the shoulder belt guide. After you move the adjuster to where you want it, try to move it down without squeezing the release button to make sure it has locked into position.

Downloaded from www.Manualslib.com manuals search engine

SEATS AND RESTRAINT SYSTEMS

⚠ WARNING

Be sure that the shoulder belt is positioned on the center of the outside shoulder. The belt should be away from your face and neck, but not falling off your shoulder. Misadjustment of the belt could reduce the effectiveness of the safety belt in a crash.

Question: What's wrong with this?

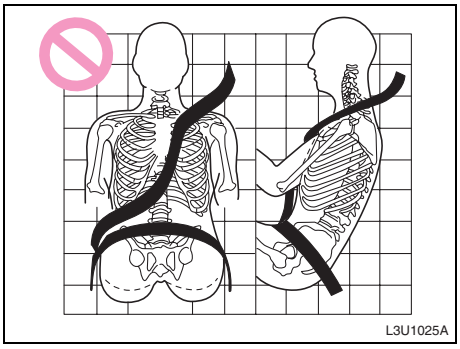

Answer: The shoulder belt is too loose. It won't give nearly as much protection this way.

⚠ WARNING

You can be severely hurt if your shoulder belt is too loose. In a crash, you would move forward too much, which could increase injury. The shoulder belt should fit against your body.

Question: What's wrong with this?

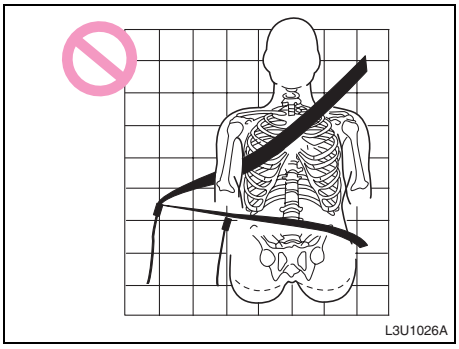

Answer: The belt is buckled in the wrong place.

⚠ WARNING

You can be severely injured if your belt is buckled in the wrong place. In a crash, the belt would slide up over your abdomen. The belt forces would be at the waist, not at the pelvic bones. This could cause serious internal injuries. Always buckle your belt into the buckle nearest you.

Downloaded from www.Manualslib.com manuals search engine

Safety Belts:

Question: What's wrong with this?

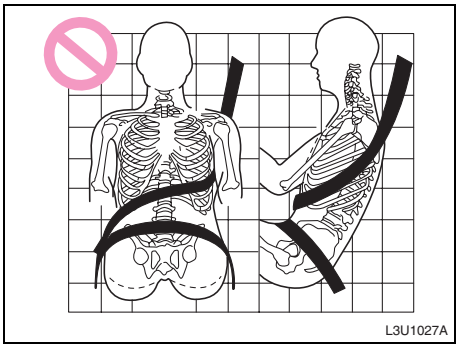

Answer: The shoulder belt is worn under the arm. It should be worn over the shoulder at all times.

⚠ WARNING

You can be severely injured if you wear the shoulder belt under your arm. In a crash, your body would move too far forward, which would increase the chance of head and neck injury. Also, the belt would apply too much force to the ribs, which aren't as strong as shoulder bones. You could also severely injure internal organs like your liver or spleen.

Question: What's wrong with this?

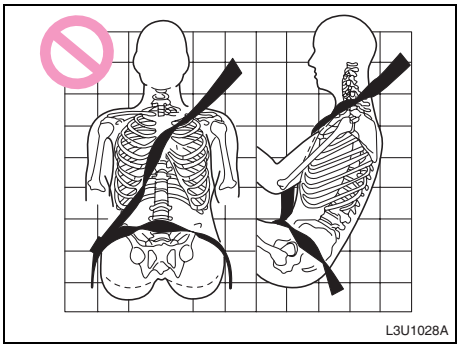

Answer: The belt is twisted across the body.

⚠ WARNING

You can be severely injured by a twisted belt. In a crash, you wouldn't have the full width of the belt to spread impact forces. If a belt is twisted, make it straight so it can work properly, or ask your dealer to fix it.

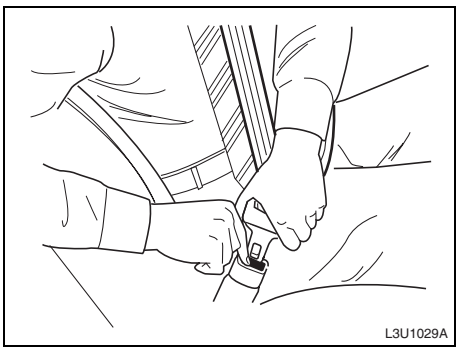

To unlatch the belt, just push the button on the buckle. The belt should go back out of the way.

Before you close the door, be sure the belt is out of the way. If you slam the door on it, you can damage both the belt and your vehicle.

Safety Belt Use During Pregnancy

Safety belts work for everyone, including pregnant women. Like all occupants, they are more likely to be severely injured if they don't wear safety belts.

Downloaded from www.Manualslib.com manuals search engine

SEATS AND RESTRAINT SYSTEMS

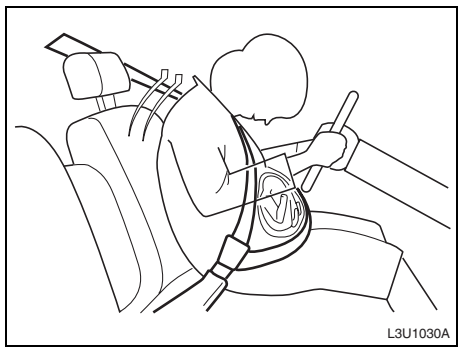

A pregnant woman should wear a lap-shoulder belt, and the lap portion should be worn as low as possible, below the rounding, throughout the pregnancy.

The best way to protect the fetus is to protect the mother. When a safety belt is worn properly, it's more likely that the fetus won't be hurt in a crash. For pregnant women, as for anyone, the key to making safety belts effective is wearing them properly.

Right Front Passenger Position

To learn how to wear the right front passenger's safety belt properly, see "Driver Position" in this section.

The right front passenger's safety belt works the same way as the driver's safety belt.

Rear Seat Passengers

It's very important for rear seat passengers to buckle up! Accident statistics show that unbelted people in the rear seat are hurt more often in crashes than those who are wearing safety belts.

Rear passengers who aren't safety belted can be thrown out of the vehicle in a crash. And they can strike others in the vehicle who are wearing safety belts.

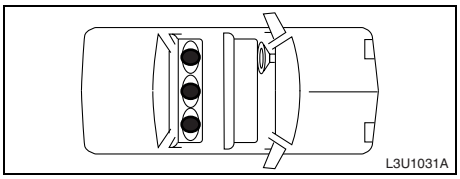

Lap-Shoulder Belt

All rear seating positions have lap-shoulder belts. Here's how to wear one properly.

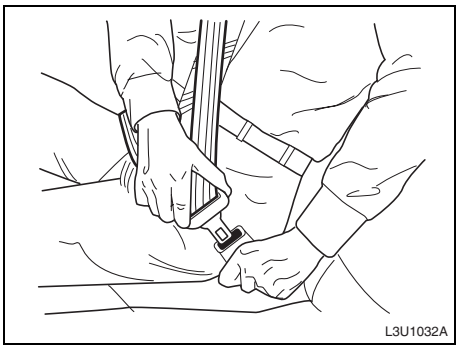

1) Pick up the latch plate and pull the belt across you. Don't let it get twisted.
   The shoulder belt may lock if you pull the belt across you very quickly. If this happens, let the belt go back slightly to unlock it. Then pull the belt across you more slowly.
2) Push the latch plate into the buckle until it clicks. Be sure you are using the correct buckle and that the latch plate clicks when inserted into the buckle.

Downloaded from www.Manualslib.com manuals search engine

Safety Belts:

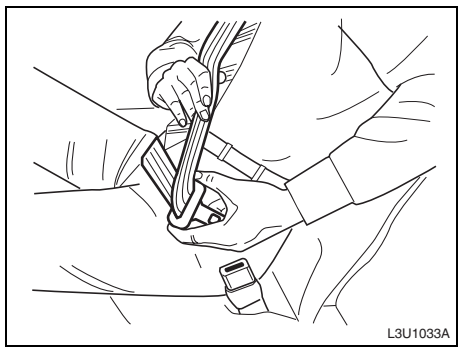

Pull up on the latch plate to make sure it is secure.
Make sure the release button on the buckle is positioned so you would be able to unbuckle the safety belt quickly if you ever had to.

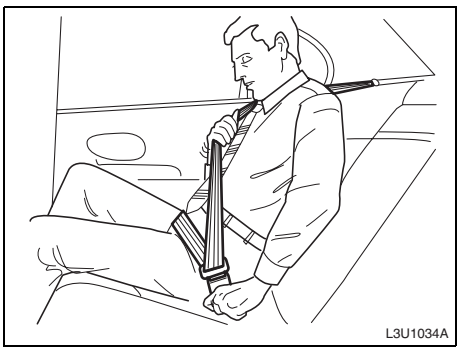

3) To make the lap part tight, pull down on the buckle end of the belt as you pull up on the shoulder part.

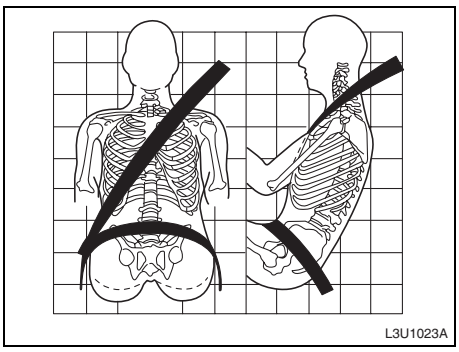

The lap part of the belt should be worn low and snug on the hips, just touching the thighs. In a crash this applies force to the strong pelvic bones so you'd be less likely to slide under the lap belt. If you slid under it, the belt would apply force at your abdomen. This could cause serious or even fatal injuries. The shoulder belt should go over the shoulder and across the chest. These parts of the body are best able to take belt-restraining forces.

The safety belt locks if there's a sudden stop or a crash, or if you pull the belt very quickly out of the retractor.

Downloaded from www.Manualslib.com manuals search engine

SEATS AND RESTRAINT SYSTEMS

⚠ WARNING

You can be severely hurt if your shoulder belt is too loose. In a crash, you would move forward too much, which could increase injury. The shoulder belt should fit against your body.

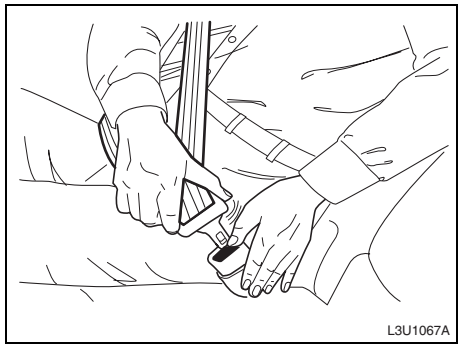

To unlatch the belt, just push the button on the buckle.

Safety Belt Pretensioner System

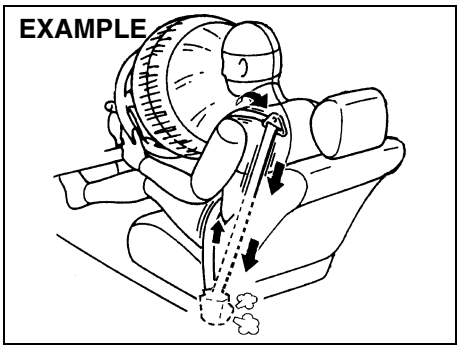

⚠ WARNING

This section of the owner's manual describes your vehicle's SAFETY BELT PRETENSIONER SYSTEM. Please read and follow ALL these instructions carefully to minimize your risk of severe injury or death.

Your vehicle is equipped with a safety belt pretensioner system at the front seating positions. You can use the pretensioner safety belts in the same manner as ordinary safety belts.

The safety belt pretensioner system is activated based on crash severity. The crash sensors and the electronic controller of the air bag system also control the safety belt pretensioners. For precautions and general information including servicing the pretensioner system, refer to the "Supplemental Restraint System (air bags)" section in addition to this "Safety Belt Pretensioner System" section, and follow all those precautions.

The pretensioner is located in each front safety belt retractor. The pretensioner tightens the safety belt so the belt fits the occupant's body more snugly in the event of a frontal crash. The retractors will remain locked after the pretensioners are activated. Upon activation, some noise will occur and some smoke may be released. These conditions are not harmful and do not indicate a fire in the vehicle.

The driver and all passengers must be properly restrained by wearing safety belts at all times, whether or not a pretensioner is equipped at their seating position, to minimize the risk of severe injury or death in the event of a crash. Sit fully back in the seat; sit up straight; do not lean forward or sideways. Adjust the belt so the lap portion of the belt is worn low across the pelvis, not across the waist. Please refer to the "Front Seats" section and the instructions and precautions about the safety belts in this "Safety Belts" section for details on proper seat and safety belt adjustments.

Please note that the pretensioners will activate only in severe frontal collisions. They are not designed to activate in rear

Downloaded from www.Manualslib.com manuals search engine

impacts, side impacts, rollovers or minor frontal collisions. The pretensioners can be activated only once. If the pretensioners are activated, have the pretensioner system serviced by an authorized SUZUKI dealer as soon as possible.

If the air bag readiness light on the instrument cluster does not blink or come on briefly when the ignition switch is turned to the “ON” position, stays on for more than 10 seconds, or comes on while driving, the pretensioner system or the air bag system may not work properly. Have both systems inspected by an authorized SUZUKI dealer as soon as possible.

Service on or around the pretensioner system components or wiring must be performed only by an authorized SUZUKI dealer who is specially trained. Improper service could result in unintended activation of pretensioners or could render the pretensioners inoperative. Either of these two conditions may result in personal injury.

To prevent damage or unintended activation of the pretensioners, be sure the battery is disconnected and the ignition switch has been in the “LOCK” position for at least 60 seconds before performing any electrical service work on your SUZUKI. Do not touch pretensioner system components or wiring. The wires are wrapped with yellow tape or yellow tubing, and the couplers are yellow. When scrapping your SUZUKI, ask your SUZUKI dealer, body repair shop or scrap yard for assistance.

Safety Belt Extender

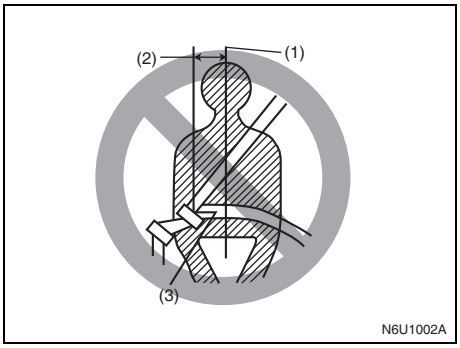

(1) Center of body
(2) Less than 152 mm (6 inches)
(3) Open end of extender buckle

If a safety belt cannot be fastened securely because it is not long enough, see your authorized SUZUKI dealer for a safety belt extender. Safety belt extenders are available for each seating position except for the rear center position. After inspecting the relationship between the safety belt length, the occupant’s body size, and the seat adjustment (the driver’s seat should always be adjusted as far back as possible while still maintaining control of the vehicle, and other adjustable seats should be adjusted as far back as possible), your dealer can select the appropriate safety belt extender.

- A safety belt extender should only be used for the person, vehicle and seating location it was provided for.
- When using the extender, ensure that both ends are latched securely. Do not use the extender if the open end of the extender’s buckle is within 152 mm (6 inches) of the center of the occupant’s body (See diagram). Use of the extender when the buckle is too close to the center of the body could increase the risk of abdominal injury in the event of an accident, and could cause the shoulder belt to be positioned incorrectly.
- Make sure to use the correct buckle corresponding to your seating position.
- Safety belt extenders are not intended for use by pregnant women, and should only be used upon approval by their medical advisors.
- Remove and stow the extender when it is not being used.

Downloaded from www.Manualslib.com manuals search engine

⚠ WARNING

Failure to follow these instructions may increase the risk of injury in a crash.

- **Only use an extender for the person, vehicle and seating position it was provided for.**
- **A front safety belt extender must only be used in a front seating position, and a rear safety belt extender must only be used in a rear seating position.**
- **Safety belt extenders are not intended for use by pregnant women, and should only be used upon approval by their medical advisors.**
- **The extender has been designed for adults. Never use it for securing child seats.**
- **Do not use a safety belt extender if the open end of the extender's buckle is within 152 mm (6 inches) of the center of the occupant's body (See diagram).**
- **Remove and stow the extender when it is not being used.**

Child Restraints

Older Children

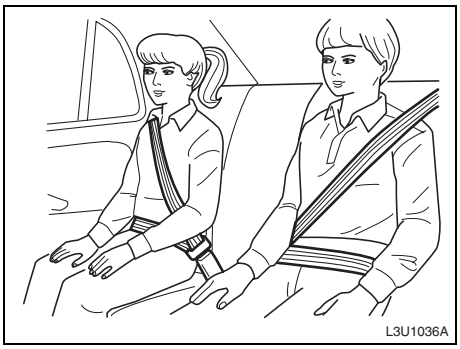

Older children who have outgrown booster seats should wear the vehicle's safety belts.

Question: What is the proper way to wear safety belts?

Answer: If possible, an older child should wear a lap-shoulder belt and get the additional restraint a shoulder belt can provide. The shoulder belt should not cross the face or neck. The lap belt should fit snugly below the hips, just touching the top of the thighs. It should never be worn over the abdomen, which could cause severe or even fatal internal injuries in a crash.

Accident statistics show that children are safer if they are restrained in the rear seat.

In a crash, children who are not buckled up can strike other people who are buckled up, or can be thrown out of the vehicle. Older children need to use safety belts properly.

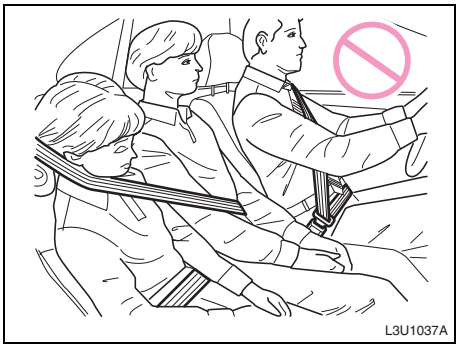

⚠ WARNING

Never do this.
Here two children are wearing the same belt. The belt can't properly spread the impact forces. In a crash, the two children can be crushed together and severely injured. A belt must be used by only one person at a time.

Downloaded from www.Manualslib.com manuals search engine

Question: What if a child is wearing a lap-shoulder belt, but the child is so small that the shoulder belt is very close to the child's face or neck?

Answer: If the child is sitting in a seat next to a window, move the child toward the center of the vehicle. If the child is sitting in the center rear seat passenger position, move the child toward the safety belt buckle. In either case, be sure that the shoulder belt still is on the child's shoulder, so that in a crash the child's upper body would have the restraint that belts provide. If the child is so small that the shoulder belt is still very close to the child's face or neck, you might want to place the child in a seat that has a lap belt, if your vehicle has one.

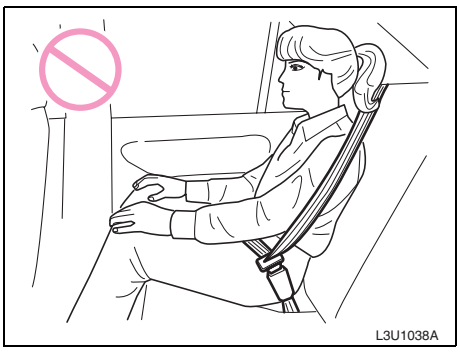

⚠ WARNING

Never do this.
Here a child is sitting in a seat that has a lap-shoulder belt, but the shoulder part is behind the child. If the child wears the belt in this way, in a crash the child might slide under the belt. The belt's force would then be applied right on the child's abdomen. That could cause serious or fatal injuries.

Wherever the child sits, the lap portion of the belt should be worn low and snug on the hips, just touching the child's thighs. This applies belt force to the child's pelvic bones in a crash.

Infants and Young Children

Everyone in a vehicle needs protection! This includes infants and all other children. Neither the distance traveled nor the age and size of the traveler changes the need to use safety restraints. In fact, the law in every state in the United States and in every Canadian province says children up to some age must be restrained while in a vehicle.

Every time infants and young children ride in vehicles, they should have the protection provided by appropriate restraints. Young children should not use the vehicle's adult safety belts alone, unless there is no other choice. Instead, they need to use a child restraint.

Downloaded from www.Manualslib.com manuals search engine

SEATS AND RESTRAINT SYSTEMS

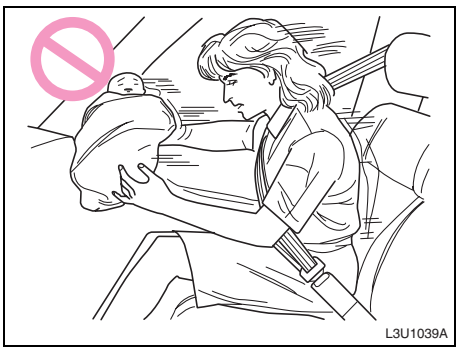

⚠ WARNING

People should never hold a baby in their arms while riding in a vehicle. A baby doesn't weigh much – until a crash occurs. During a crash a baby will become so heavy it is not possible to hold it. For example, in a crash at only 25 mph (40 km/h), a 12-lb. (5.5 kg) baby will suddenly become a 240-lb. (110 kg) force on a person's arms. A baby should be secured in an appropriate restraint.

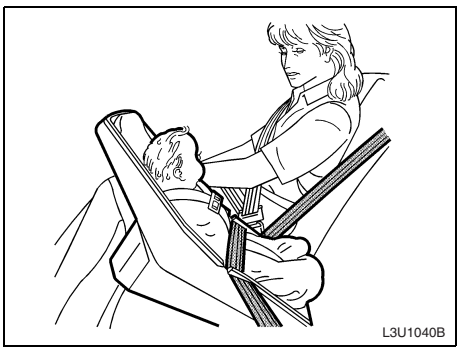

⚠ WARNING

Children who are up against, or very close to, any air bag when it inflates can be severely injured or killed. Air bags plus lap-shoulder belts offer outstanding protection for adults and older children, but not for young children and infants. Neither the vehicle's safety belt system nor its air bag system is designed for them. Young children and infants need the protection that a child restraint system can provide.

Question: What are the different types of add-on child restraints?

Answer: Add-on child restraints, which are purchased by the vehicle's owner, are available in four basic types. Selection of a particular restraint should take into consideration not only the child's weight, height and age but also whether or not the restraint will be compatible with the motor vehicle in which it will be used.

For most basic types of child restraints, there are many different models available. When purchasing a child restraint, be sure it is designed to be used in a motor vehicle. If it is, the restraint will have a label saying that it meets federal motor vehicle safety standards.

The restraint manufacturer's instructions that come with the restraint, state the weight and height limitations for a particular child restraint. In addition, there are many kinds of restraints available for children with special needs.

Downloaded from www.Manualslib.com manuals search engine

Child Restraints:

⚠ WARNING

Newborn infants need complete support, including support for the head and neck. This is necessary because a newborn infant's neck is weak and its head weighs so much compared with the rest of its body. In a crash, an infant in a rear-facing seat settles into the restraint, so the crash forces can be distributed across the strongest part of an infant's body, the back and shoulders. Infants always should be secured in appropriate infant restraints.

⚠ WARNING

The body structure of a young child is quite unlike that of an adult or older child, for whom the safety belts are designed. A young child's hip bones are still so small that the vehicle's regular safety belt may not remain low on the hip bones, as it should. Instead, it may settle up around the child's abdomen. In a crash, the belt would apply force on a body area that's unprotected by any bony structure. This alone could cause serious or fatal injuries. Young children always should be secured in appropriate child restraints.

Child Restraint Systems

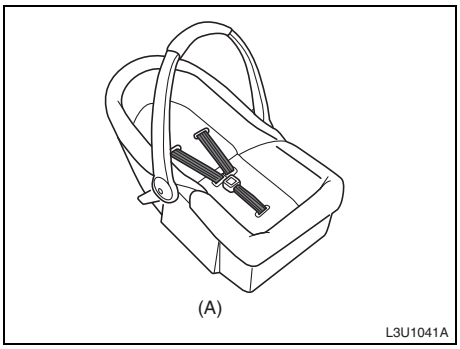

An infant car bed (A), a special bed made for use in a motor vehicle, is an infant restraint system designed to restrain or position a child on a continuous flat surface. Make sure that the infant's head rests toward the center of the vehicle.

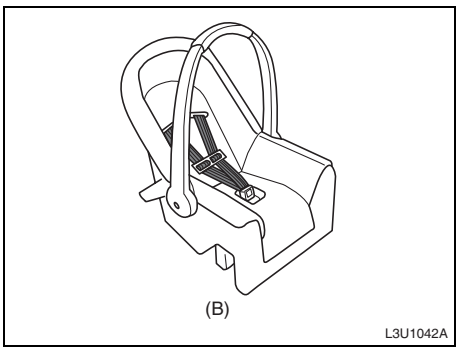

A rear-facing infant seat (B) provides restraint with the seating surface against the back of the infant. The harness system holds the infant in place and, in a crash, acts to keep the infant positioned in the restraint.

Downloaded from www.Manualslib.com manuals search engine

SEATS AND RESTRAINT SYSTEMS

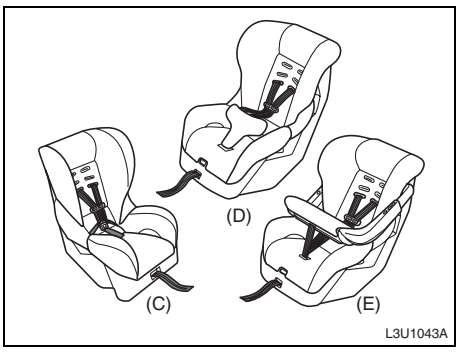

A forward-facing child seat (C–E) provides restraint for the child's body with the harness and also sometimes with surfaces such as T-shaped or shelf-like shields.

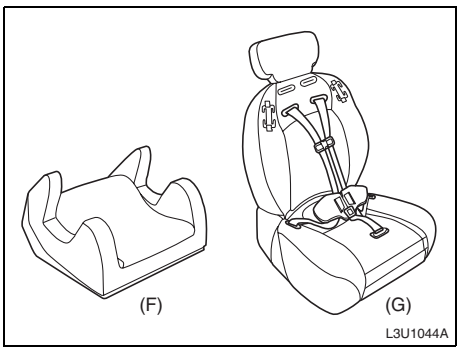

A booster seat (F–G) is a child restraint designed to improve the fit of the vehicle's safety belt system. Some booster seats have a shoulder belt positioner, and some high-back booster seats have a five-point harness. A booster seat can also help a child to see out the window.

Question: How do child restraints work?

Answer: A child restraint system is any device designed for use in a motor vehicle to restrain, seat, or position children. A built-in child restraint system is a permanent part of the motor vehicle. An add-on child restraint system is a portable one, which is purchased by the vehicle's owner.

For many years, add-on child restraints have used the adult belt system in the vehicle. To help reduce the chance of injury, the child also has to be secured within the restraint. The vehicle's belt system secures the add-on child restraint in the vehicle, and the add-on child restraint's harness system holds the child in place within the restraint.

One system, the three-point harness, has straps that come down over each of the infant's shoulders and buckle together at the crotch. The five-point harness system has two shoulder straps, two hip straps and a crotch strap. A shield may take the place of hip straps. A T-shaped shield has shoulder straps that are attached to a flat pad which rests low against the child's body. A shelf- or armrest-type shield has straps that are attached to a wide, shelf-like shield that swings up or to the side.

When choosing a child restraint, be sure the child restraint is designed to be used in a vehicle. If it is, it will have a label saying that it meets federal motor vehicle safety standards.

Then follow the instructions for the restraint. You may find these instructions on the restraint itself or in a booklet, or both. These restraints use the belt system in your vehicle, but the child also has to be secured within the restraint to help reduce the chance of personal injury. When securing an add-on child restraint, refer to the instructions that come with the restraint which may be on the restraint itself or in a booklet, or both, and to this manual. The

Downloaded from www.Manualslib.com manuals search engine

child restraint instructions are important, so if they are not available, obtain a replacement copy from the manufacturer.

Where to Put the Restraint

All child restraint systems are designed to be secured in vehicle seats by either safety belts (lap belts or the lap portion of lap-shoulder belts) or by special rigid lower anchor bars built into the seats. Whenever possible, SUZUKI recommends that child restraint systems be installed on the rear seat. According to accident statistics, children are safer when properly restrained in rear seating positions than in front seating positions. Never put a rear-facing child restraint in the front passenger seat. Here's why:

⚠ WARNING

A child in a rear-facing child restraint can be severely injured or killed if the right front passenger's frontal air bag inflates. This is because the back of the rear-facing child restraint would be very close to the inflating air bag.

(Continued)

⚠ WARNING

(Continued)

Even though the passenger sensing system is designed to turn off the passenger's frontal air bag and side air bag under certain conditions, no system is fail-safe, and no one can guarantee that an air bag will not deploy under some unusual circumstance, even though it is turned off. Always secure a rear-facing child restraint in the rear seat, even if the air bags are off.

If you need to secure a forward-facing child restraint in the right front seat, always move the front passenger seat as far back as it will go. It is better to secure the child restraint in a rear seat.

Wherever you install it, be sure to secure the child restraint properly.

Keep in mind that an unsecured child restraint can move around in a collision or sudden stop and injure people in the vehicle. Be sure to properly secure any child restraint in your vehicle – even when no child is in it.

⚠ WARNING

Children could be endangered in a crash if their child restraints are not properly secured in the vehicle. When installing a child restraint system, be sure to follow the instructions below. Be sure to secure the child in the restraint system according to the manufacturer's instructions.

Top Strap

Some child restraints have a top strap, or "top tether." It can help restrain the child restraint during a collision. For it to work, a top strap must be properly anchored to the vehicle. Some top strap-equipped child restraints are designed for use with or without the top strap being anchored. Others require the top strap always to be anchored. Be sure to read and follow the instructions for your child restraint. If yours requires that the top strap be anchored, don't use the restraint unless it is anchored properly.

If the child restraint does not have a top strap, one can be obtained, in kit form, for many child restraints. Ask the child restraint manufacturer whether or not a kit is available.

Downloaded from www.Manualslib.com manuals search engine

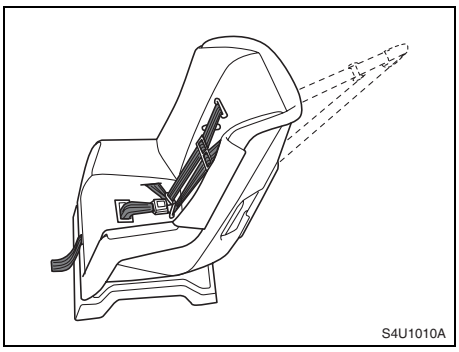

In Canada, the law requires that forward-facing child restraints have a top strap, and that the strap be anchored. In the United States, some child restraints also have a top strap. If your child restraint has a top strap, it should be anchored.

Anchor the top strap to an anchor point specified in “Top Strap Anchor Location” in this section. Be sure to use an anchor point located on the same side of the vehicle as the seating position where the child restraint will be placed.

⚠ WARNING

Each top tether bracket is designed to anchor only one child restraint. Attaching more than one child restraint to a single bracket could cause the anchor to come loose or even break during a crash. A child or others could be injured if this happens. To help prevent injury to people and damage to your vehicle, attach only one child restraint per bracket.

Once you have the top strap anchored, you’ll be ready to secure the child restraint itself. Tighten the top strap when and as the child restraint manufacturer’s instructions say.

Top Strap Anchor Location

Top strap anchors are already installed in your vehicle for the three rear seating positions.

Do not use a child restraint with a top strap in the right front passenger’s position because there is no place to anchor the top strap.

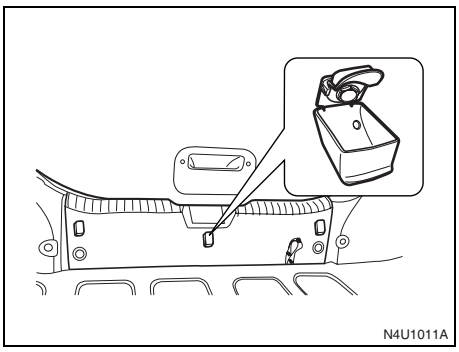

Top strap anchors are located at both sides and at the center of the lower rear tail member in the rear cargo area.

Pull the front part of the plastic cover downward to access the top strap anchors.

Securing a Child Restraint with Top Strap

Install the child restraint system as follows:

1) Remove the luggage compartment cover (if equipped).
2) Secure the child restraint on the rear seat using the procedure described in “Securing a Child Restraint in a Rear Seat Position” of this section.
3) Pull the front part of the plastic cover downward to access the top strap anchors.
4) Hook the top strap to the anchor bracket and tighten the top strap

Downloaded from www.Manualslib.com manuals search engine

according to the instructions provided by the child restraint system manufacturer. Be sure to attach the top strap to the corresponding anchor located directly behind the child restraint.

⚠ WARNING

Each top tether bracket is designed to anchor only one child restraint. Attaching more than one child restraint to a single bracket could cause the anchor to come loose or even break during a crash. A child or others could be injured if this happens. To help prevent injury to people and damage to your vehicle, attach only one child restraint per bracket.

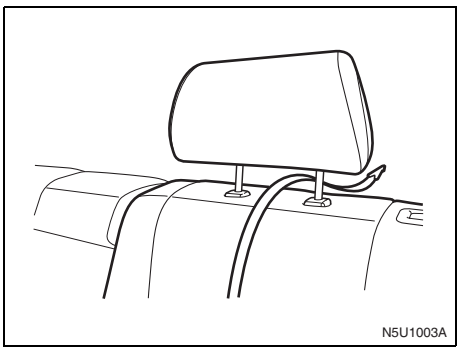

N5U1003A

5) When routing the top strap, be sure to pass it between the head restraint and the rear seatback as shown. (Refer to "Head Restraints" in this section for details on how to raise or lower the head restraint.)
6) Make sure that cargo does not interfere with routing of the top strap.

Lower Anchorages and Top Tethers for Children (LATCH System)

Your vehicle has a LATCH system. You'll find anchors (A) in the rear outside seat positions.

To assist you in locating the lower anchors, each seating position with the LATCH system has a circular disk on the seatback at each lower anchor position.

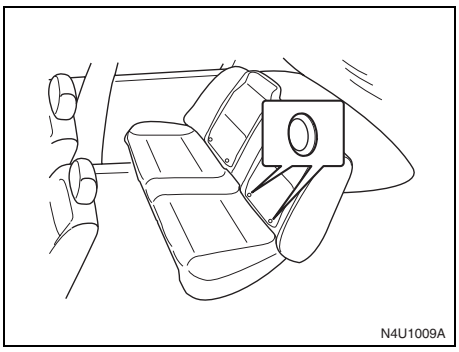

N4U1009A

The disks are located near the base of the two rear outside seating positions.

Canada only

This symbol indicates the presence of a lower connector system on a child restraint system or booster cushion.

86Z004

Downloaded from www.Manualslib.com manuals search engine

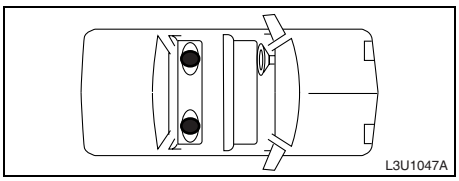

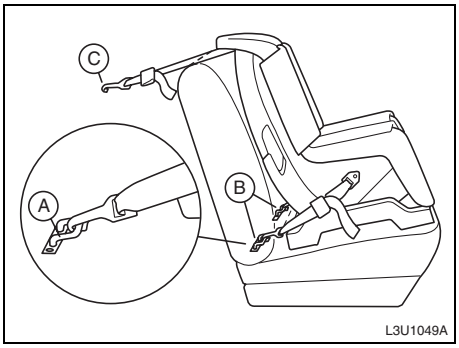

In order to use the system, you need either a forward-facing child restraint that has attaching points (B) at its base and a top tether anchor (C), or a rear-facing child restraint that has attaching points (B), as shown here.

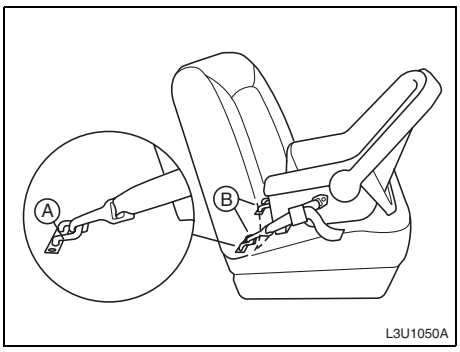

With this type of child restraint, use the LATCH system instead of the vehicle's safety belts to secure the child restraint.

⚠ WARNING

If a LATCH-type child restraint isn't attached to its anchorage points, the restraint won't be able to protect the child correctly. In a crash, the child could be severely injured or killed. Make sure that a LATCH-type child restraint is properly installed using the anchorage points. If your child restraint is not designed for the LATCH system, use the vehicle's safety belts to secure the restraint, following the instructions that came with that restraint, and also the instructions in this manual.

Securing a Child Restraint Designed for the LATCH System (Rear)

1) Find the anchors for the seating position you want to use, where the bottom of the seatback meets the back of the seat cushion.
2) Put the child restraint on the seat.
3) Attach the anchor points on the child restraint to the anchors in the vehicle. The child restraint instructions will show you how.
4) If the child restraint is forward-facing, attach the top strap to the top strap anchor. See "Top Strap" in this section. Tighten the top strap according to the child restraint instructions.
5) Push and pull the child restraint in different directions to be sure it is secure.

To remove the child restraint, simply unhook the top strap from the top tether anchor and then disconnect the lower anchor points.

Downloaded from www.Manualslib.com manuals search engine

Securing a Child Restraint in a Rear Seat Position

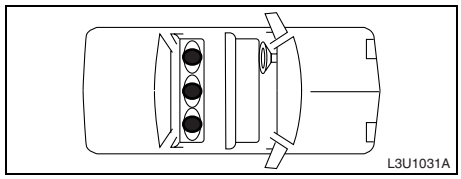

If your child restraint is equipped with the LATCH system, see “Lower Anchorages and Top Tethers for Children (LATCH System)” in this section. See “Top Strap” in this section if the child restraint has one.

If your child restraint does not have the LATCH system, you will be using the lap-shoulder belt to secure the child restraint in this position. Be sure to follow the instructions that came with the child restraint. Secure the child in the child restraint when and as the instructions say.

1) Put the restraint on the seat.
2) Pick up the latch plate, and run the lap and shoulder portions of the vehicle’s safety belt through or around the restraint. The child restraint instructions will show you how.

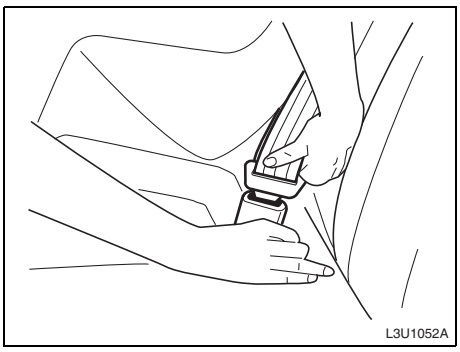

3) Buckle the belt. Make sure the release button is positioned so you would be able to unbuckle the safety belt quickly if you ever had to.

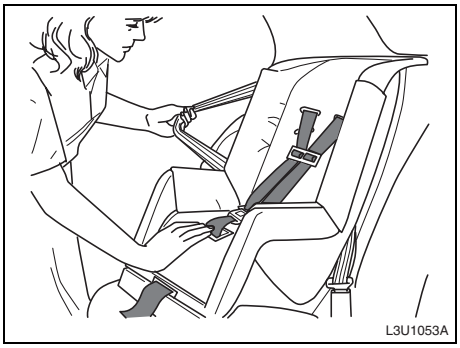

4) Pull the rest of the shoulder belt all the way out of the retractor to set the lock.

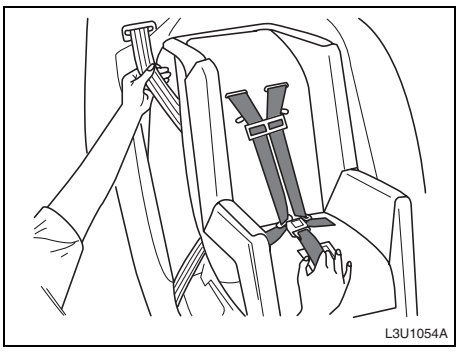

5) To tighten the belt, feed the shoulder belt back into the retractor while you push down on the child restraint. If you’re using a forward-facing child restraint, you may find it helpful to use your knee to push down on the child restraint as you tighten the belt.
6) Push and pull the child restraint in different directions to be sure it is secure.

To remove the child restraint, just unbuckle the vehicle’s safety belt and let it go back all the way. The safety belt will move freely again and be ready to work for an adult or larger child passenger.

Downloaded from www.Manualslib.com manuals search engine

SEATS AND RESTRAINT SYSTEMS

Securing a Child Restraint in the Right Front Seat Position

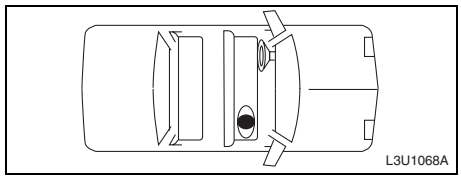

Your vehicle has a right front passenger air bag. A rear seat is a safer place to secure a child restraint. See “Where to Put the Restraint” in this section.

In addition, your vehicle has a passenger sensing system. The passenger sensing system is designed to turn off the right front passenger’s frontal and side air bag when an infant or a small child is detected. See “Passenger Sensing System” and “Manual Seats” in this section for more information on this including important safety information.

⚠ WARNING

A child in a rear-facing child restraint can be severely injured or killed if the right front passenger’s frontal air bag inflates. This is because the back of the rear-facing child restraint would be very close to the inflating air bag. Even though the passenger sensing system is designed to turn off the passenger’s frontal air bag under certain conditions, no system is fail-safe, and no one can guarantee that an air bag will not deploy under some unusual circumstance, even though it is turned off. Always secure a rear-facing child restraint in the rear seat, even if the air bag is off.

If you need to secure a forward-facing child restraint in the right front seat position, move the seat as far back as it will go before securing the forward-facing child restraint. See “Manual Seats” in this section.

If you need to secure a forward-facing child restraint in the right front seat, you will be using the lap-shoulder belt to secure the child restraint, even if the child restraint is equipped with the LATCH system. Be sure to follow the instructions that came with the child restraint. Secure the child in the child restraint when and as the instructions say.

1) Your vehicle has a right front passenger’s frontal air bag. See “Passenger Sensing System” in this section. Always secure a rear-facing child restraint in the rear seat, even if the air bag is off. If your child restraint is forward-facing, move the seat as far back as it will go before securing the child restraint in this seat. See “Manual Seats” in this section.
   When the passenger sensing system has turned off the right front passenger’s frontal and side air bag, the passenger air bag off indicator should light. See “Passenger Sensing System” in this section.
   A thick layer of additional material such as a blanket, or aftermarket equipment such as seat covers heaters or massagers, located between the seat cushion and the child restraint or small occupant, can affect how the passenger sensing system operates. Remove any additional material from the seat cushion before installing/securing the child restraint or small occupant.
2) Put the child restraint on the seat.
3) Pick up the latch plate, and run the lap and shoulder portions of the vehicle’s safety belt through or around the restraint. The child restraint instructions will show you how.

Downloaded from www.Manualslib.com manuals search engine

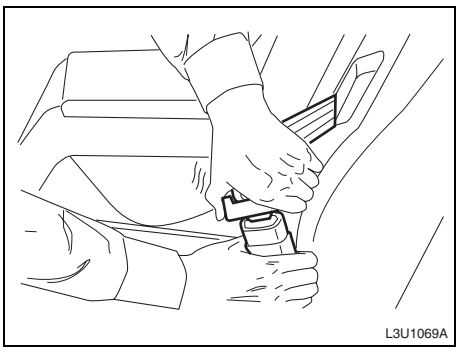

4) Buckle the belt. Make sure the release button is positioned so you would be able to unbuckle the safety belt quickly if you ever had to.

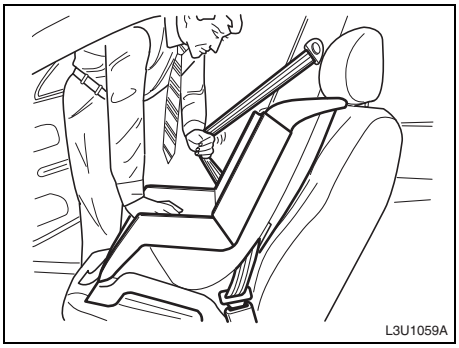

5) Pull the rest of the shoulder belt all the way out of the retractor to set the lock.

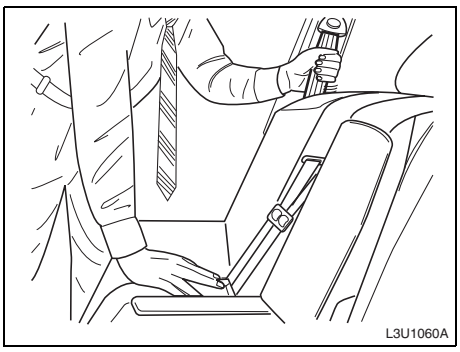

6) To tighten the belt, feed the shoulder belt back into the retractor while you push down on the child restraint. You may find it helpful to use your knee to push down on the child restraint as you tighten the belt.
7) Push and pull the child restraint in different directions to be sure it is secure.
8) If the air bag is off, the passenger air bag off indicator located in the clock display in center of the instrument panel will be lit.

To remove the child restraint, just unbuckle the vehicle's safety belt and let it go back all the way. The safety belt will move freely again and be ready to work for an adult or larger child passenger.

Supplemental Restraint System (air bags)

This section explains the frontal and side impact air bag systems.

⚠ WARNING

This section of the owner's manual describes the protection provided by your vehicle's SUPPLEMENTAL RESTRAINT SYSTEM (advanced air bags). Please read and follow ALL these instructions carefully to minimize your risk of severe injury or death in the event of a collision.

Your vehicle has an advanced frontal air bag for the driver and an advanced frontal air bag for the right front passenger. Your vehicle also has side impact air bags for the driver and right front passenger.

Your vehicle is equipped with a Supplemental Restraint System consisting of the following components in addition to a lap-shoulder belt at each front seating position.

Downloaded from www.Manualslib.com manuals search engine

SEATS AND RESTRAINT SYSTEMS

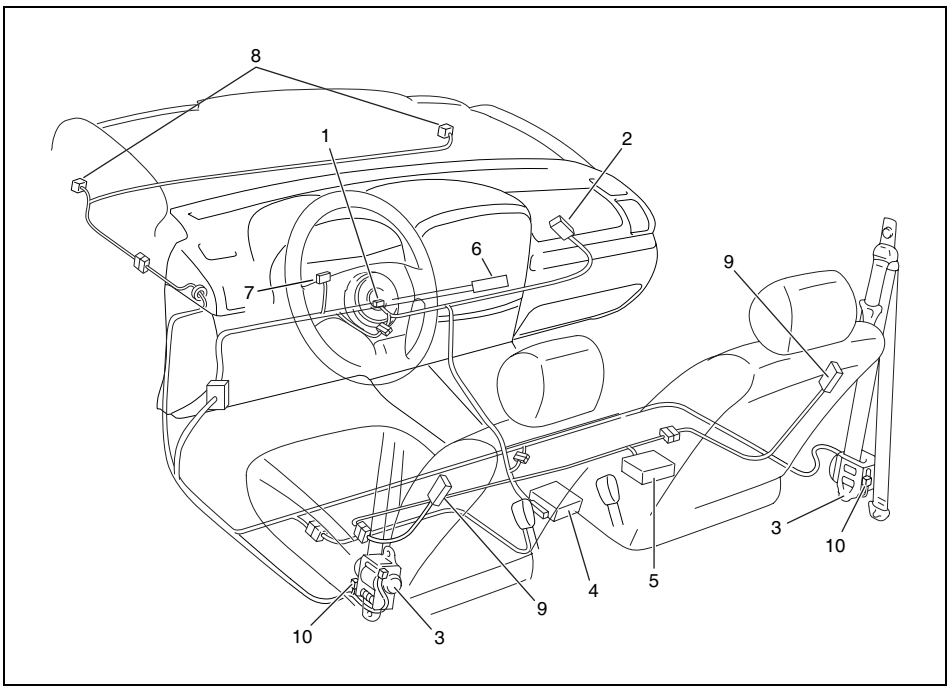

85Z008

1. Driver's air bag
2. Front passenger's air bag
3. Safety belt pretensioner
4. Air bag controller (SDM)
5. Occupant classification module
6. "PASSENGER AIRBAG OFF" indicator
7. Air bag readiness light
8. Early crash sensor
9. Side air bag
10. Side air bag sensor

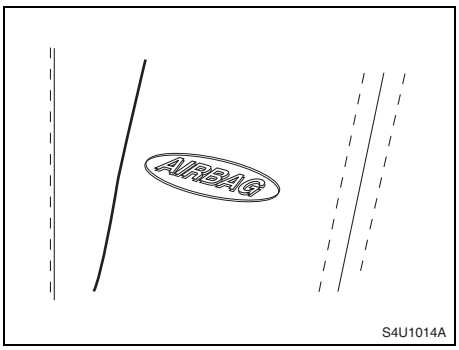

The words AIR BAG will appear on the side of the front seatback closest to the door, to indicate the presence of a side impact air bag.

Frontal air bags are designed to help reduce the risk of injury from the force of a frontal crash. Side impact air bags are designed to help reduce the risk of injury from the force of a side impact crash. But

Downloaded from www.Manualslib.com manuals search engine

Supplemental Restraint System:

these air bags must inflate very quickly to do their job. Here are the most important things to know about the air bag systems.

⚠ WARNING

You can be severely injured or killed in a crash if you aren't wearing your safety belt – even if you have air bags. Wearing your safety belt during a crash helps reduce your chance of hitting things inside the vehicle or being ejected from it. Air bags are designed to work with safety belts but don't replace them.
Frontal air bags for the driver and right front passenger are designed to deploy only in moderate to severe frontal and near frontal crashes. They aren't designed to inflate at all in rollover, rear or low-speed frontal crashes, or in many side crashes. And, for some unrestrained occupants, frontal air bags may provide less protection in frontal crashes than more forceful air bags have provided in the past.

(Continued)

⚠ WARNING

(Continued)
The side impact air bags are designed to inflate only in moderate to severe crashes where something hits the side of your vehicle. They aren't designed to inflate in frontal, in rollover or in rear crashes.
Everyone in your vehicle should wear a safety belt properly – whether or not there's an air bag for that person.

⚠ WARNING

Air bags inflate with great force, faster than the blink of an eye. If you're too close to an inflating air bag, as you would be if you were leaning forward, it could severely injure you. Safety belts help keep you in position for air bag inflation before and during a crash. Always wear your safety belt, even with frontal air bags. The driver should sit as far back as possible while still maintaining control of the vehicle. Front occupants should not lean on or sleep against the door.

⚠ WARNING

Do not attach any objects to, or place any objects over, the steering wheel or dashboard. Do not place any objects between the air bag and the driver or front passenger. These objects may interfere with air bag operation or may be propelled by the air bag in the event of a crash. Either of these conditions may cause severe injury.

⚠ WARNING

Anyone who is up against, or very close to, any air bag when it inflates can be severely injured or killed. Air bags plus lap-shoulder belts offer the best protection for adults, but not for young children and infants. Neither the vehicle's safety belt system nor its air bag system is designed for them. Young children and infants need the protection that a child restraint system can provide. Always secure children properly in your vehicle. To read how, see the part of this manual called "Older Children" or "Infants and Young Children."

Downloaded from www.Manualslib.com manuals search engine

SEATS AND RESTRAINT SYSTEMS

There is an air bag readiness light on the instrument panel, which shows the air bag symbol.

The air bag readiness system checks the air bag electrical system for malfunctions. The light tells you if there is an electrical problem. See “Air Bag Readiness Light” in section 3 for more information.

Where Are the Air Bags?

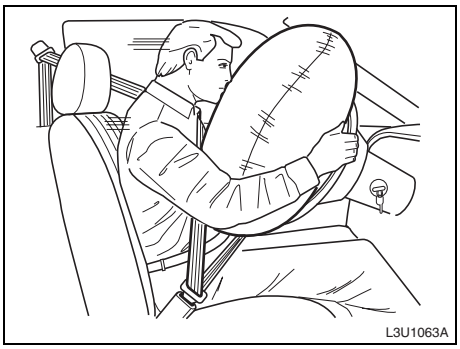

The driver’s frontal air bag is in the middle of the steering wheel.

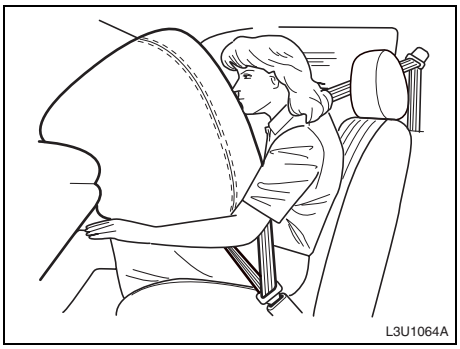

The right front passenger’s frontal air bag is in the instrument panel on the passenger’s side.

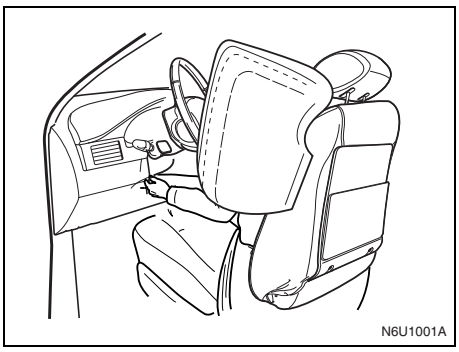

The side impact air bag is in the side of the front seatback closest to the door.

⚠ WARNING

Don’t put anything between an occupant and an air bag, and don’t attach or put anything on the steering wheel hub or on or near any other air bag covering. If something is between an occupant and an air bag, the bag might not inflate properly or it might force the object into that person causing severe injury or even death. The path of an inflating air bag must be kept clear. Don’t use seat covers on the front seats.

Downloaded from www.Manualslib.com manuals search engine

Passenger Sensing System

Your vehicle has a passenger sensing system for the right front passenger position. The passenger air bag off indicator will be visible when you turn your ignition key to ON or START. The words “PASSENGER AIR BAG OFF” will be visible in the clock display located in the center of the instrument panel during the system check. When the system check is complete, the words “PASSENGER AIR BAG OFF” should go out unless the passenger sensing system has turned off the front passenger’s frontal and side air bags. See “Passenger Air bag Off Indicator” in Section 3.

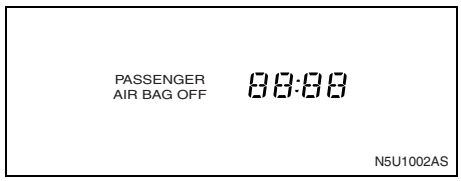

The passenger sensing system will turn off the right front passenger’s frontal air bag and side air bag under certain conditions. The driver’s frontal air bag and side air bag are not part of the passenger sensing system. The passenger sensing system works with sensors that are part of the right front passenger’s seat cushion. The sensors are designed to detect the presence of a properly-seated occupant and determine if the passenger’s frontal air bag and side air bag should be enabled (may inflate) or not.

⚠ WARNING

A child in a rear-facing child restraint can be severely injured or killed if the right front passenger’s frontal air bag inflates. This is because the back of the rear-facing child restraint would be very close to the inflating air bag. Even though the passenger sensing system is designed to turn off the passenger’s frontal air bag and side air bag under certain conditions, no system is fail-safe, and no one can guarantee that an air bag will not deploy under some unusual circumstance, even though it is turned off. Always secure a rear-facing child restraint in the rear seat, even if the air bags are off.

The passenger sensing system is designed to turn off the right front passenger’s frontal air bag and side air bag when the weight on the front seat is 25.6 kg (56.4 lbs) or less. The air bag should be turned off in the following situations.

- the right front passenger seat is unoccupied.
- the system determines that an infant or a small child is present in the right front passenger seat.
- a right front passenger takes his/her weight off of the seat for a period of time.
- there is a critical problem with the air bag system or the passenger sensing system.

When the passenger sensing system has turned off the passenger’s frontal air bag and side air bag, the passenger air bag off indicator in the clock display will light and stay lit to remind you that the air bags are off. See “Passenger Air Bag Off Indicator” in Section 3.

Accident statistics show that children are safer if they are restrained in the rear rather than the front seat. We recommend that child restraints be secured in the rear seat.

For some children who have outgrown child restraints and for very small adults, the passenger sensing system may or may not turn off the right front passenger’s frontal air bag and side air bag, depending upon the person’s seating posture and body build. Everyone in your vehicle who has outgrown child restraints should wear a safety belt properly – whether or not there is an air bag for that person.

If a person of adult-size is sitting in the right front passenger’s seat, but the passenger air bag off indicator is lit, it could be because that person is not sitting properly in the seat. If this happens, do one of the following:

- Turn the vehicle off and ask the person to place the seatback in the fully upright

Downloaded from www.Manualslib.com manuals search engine

position, then sit upright in the seat, centered on the seat cushion, with the person's legs comfortably extended. Restart the vehicle and have the person remain in this position for about three minutes. This will allow the system to detect that person and then enable the passenger's air bag.

- With the vehicle parked, ask the right front passenger to get out of the seat for more than three seconds, place the seatback in the fully upright position, and then sit upright in the seat, centered on the seat cushion, with the person's legs comfortably extended. Have the person remain in this position for about three minutes. This will allow the system to detect that person and then enable the passenger's air bag.

⚠ WARNING

If the air bag readiness light in the instrument panel cluster ever comes on and stays on, it means that something may be wrong with the air bag system. If this ever happens, have the vehicle serviced promptly, because an adult-size person sitting in the right front passenger's seat may not have the protection of the air bags. See "Air Bag Readiness Light" in Section 3 for more on this, including important safety information.

⚠ WARNING

A thick layer of additional material such as a blanket, or aftermarket equipment such as seat covers, seat heaters and seat massagers can affect how well the passenger sensing system operates. Remove any additional material from the seat cushion before allowing a passenger to use the front passenger's seat, and do not use aftermarket equipment such as seat covers.

Adding Equipment to Your Air Bag-Equipped Vehicle

Question: Because I have a disability, I have to get my vehicle modified. How can I find out whether this will affect my advanced air bag system?

Answer: Changing or moving any parts of the front seats, safety belts, the air bag sensing and diagnostic module can affect the operation of the advanced air bag system. If it is necessary to modify the advanced air bag system to accommodate a person with disabilities, owners in the continental United States can call American Suzuki toll-free at 1-800-934-0934, or write to:

American Suzuki Motor Corporation
Automotive Customer Relations
3251 East Imperial Highway
Brea, CA 92821-6795

When Should an Air Bag Inflate?

The driver's and right front passenger's frontal air bags are designed to inflate in moderate to severe frontal or near-frontal crashes. But they are designed to inflate only if the impact speed is above the system's designed "threshold level."

If the front of your vehicle goes straight into a wall that doesn't move or deform, the threshold level is about 9 to 14 mph (14.5 to 23 km/h). The threshold level can vary, however, with specific vehicle design, so that it can be somewhat above or below this range.

If your vehicle strikes something that will move or deform, such as a parked car, the threshold level will be higher. The driver's and right front passenger's frontal air bags are not designed to inflate in rollovers, rear impacts, or in many side impacts because inflation would not help the occupant.

A side impact air bag is designed to inflate in moderate to severe side crashes involving the door. A side impact air bag will inflate if the crash severity is above the system's designed "threshold level". The threshold level can vary with specific vehicle design. A side impact air bag is not designed to inflate in frontal or near-frontal impacts, rollovers or rear impacts, because inflation would not help the occupant.

In any particular crash, no one can say whether an air bag should have inflated simply because of the damage to a vehicle

Downloaded from www.Manualslib.com manuals search engine

or because of what the repair costs were. For frontal air bags, inflation is determined by the angle of the impact and how quickly the vehicle slows down in frontal and near-frontal impacts. For side impact air bags, inflation is determined by the location and severity of the impact.

What Makes an Air Bag Inflate?

In an impact of sufficient severity, the air bag sensing system detects that the vehicle is in a crash. For both frontal and side impact air bags, the sensing system triggers a release of gas from the inflator, which inflates the air bag. The inflator, the air bag and related hardware are all part of the air bag modules. Frontal air bag modules are located inside the steering wheel and instrument panel. Side impact air bag modules are located in the side of the seatback closest to the door.

How Does an Air Bag Restrain?

In moderate to severe frontal or near frontal collisions, even belted occupants can contact the steering wheel or the instrument panel. In moderate to severe side collisions, even belted occupants can contact the inside of the vehicle.

The air bag supplements the protection provided by safety belts. Air bags distribute the force of the impact more evenly over the occupant's upper body, stopping the occupant more gradually. But the frontal air bags would not help you in many types of collisions, including rollovers, rear impacts, and many side impacts, primarily because an occupant's motion is not toward the air bag. Side impact air bags would not help you in many types of collisions, including frontal or near frontal collisions, rollovers, and rear impacts, primarily because an occupant's motion is not toward those air bags. Air bags should never be regarded as anything more than a supplement to safety belts, and then only in moderate to severe frontal or near-frontal collisions for the driver's and right front passenger's frontal air bags, and only in moderate to severe side collisions for vehicles with side impact air bags.

What Will You See After an Air Bag Inflates?

After the air bag inflates, it quickly deflates, so quickly that some people may not even realize the air bag inflated. Some components of the air bag module will be hot for a short time. These components include the steering wheel hub for the driver's frontal air bag, the instrument panel for the right front passenger's frontal bag and the side of the seatback closest to the front door for the side impact air bag. The parts of the bag that come into contact with you may be warm, but not too hot to touch. There will be some smoke and dust coming from the vents in the deflated air bags. Air bag inflation doesn't prevent the driver from seeing or being able to steer the vehicle, nor does it stop people from leaving the vehicle.

⚠ WARNING

When an air bag inflates, there is dust in the air. This dust could cause breathing problems for people with a history of asthma or other breathing trouble. To avoid this, everyone in the vehicle should get out as soon as it is safe to do so. If you have breathing problems but can't get out of the vehicle after an air bag inflates, then get fresh air by opening a window or a door. If you experience breathing problems following an air bag deployment, you should seek medical attention.

In many crashes severe enough to inflate an air bag, windshields are broken by vehicle deformation. Additional windshield breakage may also occur from the right front passenger air bag.

- Air bags are designed to inflate only once. After an air bag inflates, you'll need some new parts for your air bag system. If you don't get them, the air bag system won't be there to help protect you in another crash. A new system will include air bag modules and possibly other parts. The service manual for your vehicle covers the need to replace other parts.

Downloaded from www.Manualslib.com manuals search engine

- Your vehicle is equipped with a crash sensing and diagnostic module, which records information about the air bag system. The module records information about the readiness of the system, when the system commands air bag inflation.
- Let only qualified technicians work on your air bag system. Improper service can mean that your air bag system won't work properly. See your dealer for service.

CAUTION

If you damage the covering for the driver's or the right front passenger's frontal air bag, or the covering on the front seatback for a side air bag, the bag may not work properly. You may have to replace the air bag module in the steering wheel, both the air bag module and the instrument panel for the right front passenger's air bag, or both the air bag module and seatback for the side impact air bag. Do not open or break the air bag coverings.

Servicing Your Air Bag-Equipped Vehicle

Air bags affect how your vehicle should be serviced. There are air bag system parts in several places around your vehicle. You don't want the system to inflate while someone is working on your vehicle. Your dealer and the service manual have information about servicing your vehicle and the air bag system.

⚠ WARNING

For up to 10 seconds after the ignition key is turned off and the battery is disconnected, an air bag can still inflate during improper service. You can be injured if you are close to an air bag when it inflates. Avoid yellow connectors. They are probably part of the air bag system. Be sure to follow proper service procedures, and make sure the person performing work for you is qualified to do so.

The air bag systems in your vehicle do not need regular maintenance.

Restraint System Check

Checking Your Restraint Systems

Now and then, make sure the safety belt reminder light and all your belts, buckles, latch plates, retractors and anchorages are working properly. Look for any other loose or damaged safety belt system parts. If you see anything that might keep a safety belt system from doing its job, have it repaired.

Torn or frayed safety belts may not protect you in a crash. They can rip apart under impact forces. If a belt is torn or frayed, get a new one right away.

Also look for any opened or broken air bag covers, and have them repaired or replaced. (The air bag system does not need regular maintenance.)

Downloaded from www.Manualslib.com manuals search engine

Restraint System Check:

Replacing Restraint System Parts After a Crash

⚠ WARNING

A crash can damage the restraint systems in your vehicle. A damaged restraint system may not properly protect the person using it, resulting in serious injury or even death in a crash. To help make sure your restraint systems are working properly after a crash, have them inspected and any necessary replacements made as soon as possible.

If you've had a crash, do you need new belts or LATCH system parts?

If belts are cut or damaged, replace them. Collision damage also may mean you will need to have LATCH system, safety belt or seat parts repaired or replaced. New parts and repairs may be necessary even if the belt or LATCH system wasn't being used at the time of the collision.

If the frontal air bags inflate, you will also need to replace the driver's and right front passenger's safety belt pretensioners and safety belts. Be sure to do so. Then the new pretensioners and safety belts will be there to help protect you in a collision.

If your vehicle is equipped with side air bags, the front seat assembly must be replaced after the side air bag has been deployed.

If an air bag inflates, you'll need to replace air bag system parts.

Downloaded from www.Manualslib.com manuals search engine

MEMO

Downloaded from www.Manualslib.com manuals search engine

FEATURES AND CONTROLS

Keys 2-1
Doors and Locks 2-4
Windows 2-7
Theft-Deterrent Systems 2-8
Daily Inspection Checklist 2-10
Starting and Operating Your Vehicle 2-10
Mirrors 2-20
Storage Areas 2-21
Sunroof 2-23

Downloaded from www.Manualslib.com manuals search engine

FEATURES AND CONTROLS

Keys

⚠ WARNING

Leaving children in a vehicle with the ignition key is dangerous for many reasons. A child or others could be badly injured or even killed.
They could operate the power windows or other controls or even make the vehicle move.
Don't leave the keys in a vehicle with children.

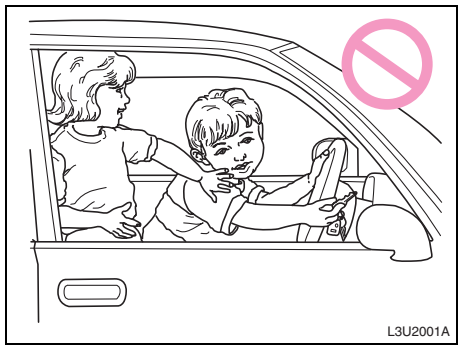

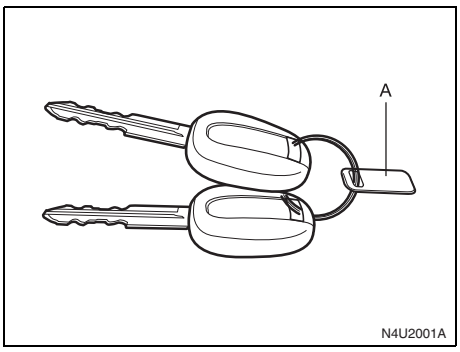

One key is used for the ignition, the door and all other locks.

When a new vehicle is delivered, you are provided with two keys. Keep one of the two keys as a spare. The key number is stamped on the key tag (A). The tag has a code on it that tells your dealer or a qualified locksmith how to make extra keys. If you lose your key, you'll be able to have a new one made easily using the tag. For vehicle security, keep the tag in a safe place and also record the key number somewhere other than inside of the vehicle.

If you need a new key, contact your dealer who can obtain the correct key code.

Remote Keyless Entry System

If equipped, the keyless entry system operates on a radio frequency subject to Federal Communications Commission (FCC) Rules and with Industry Canada.

This device complies with Part 15 of the FCC Rules. Operation is subject to the following two conditions:

1. This device may not cause interference, and
2. This device must accept any interference received, including interference that may cause undesired operation of the device.

This device complies with RSS-210 of Industry Canada. Operation is subject to the following two conditions:

1. This device may not cause interference, and
2. This device must accept any interference received, including interference that may cause undesired operation of the device.

Changes or modifications to this system by other than an authorized service facility could void authorization to use this equipment.

At times you may notice a decrease in range. This is normal for any remote keyless entry system. If the transmitter does not work or if you have to stand closer to your vehicle for the transmitter to work, try this:

Downloaded from www.Manualslib.com manuals search engine

- Check the distance. You may be too far from your vehicle. You may need to stand closer during rainy or snowy weather.
- Check the location. Other vehicles or objects may be blocking the signal. Take a few steps to the left or right, hold the transmitter higher, and try again.
- Check to determine if battery replacement is necessary. See “Battery Replacement” under Remote Keyless Entry System Operation in this section.
- If you are still having trouble, see your dealer or a qualified technician for service.

Remote Keyless Entry System Operation

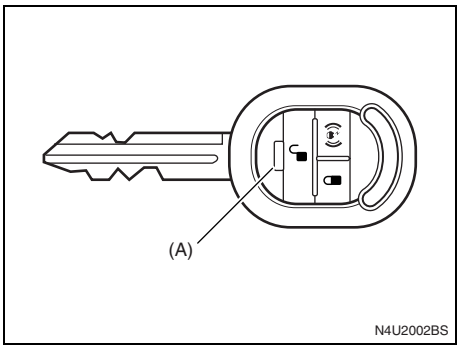

The following functions are available if your vehicle has the remote keyless entry system:

(LOCK):
Press this button to lock all of the doors. If all of the doors are closed, the hazard lamps will flash once and the horn will chirp to indicate that locking has occurred. The theft-deterrent system will activate and the security indicator located on the driver’s door lock will flash.

(UNLOCK):
Press this button to unlock all of the doors. If all of the doors are closed, the hazard lamps will flash twice to indicate that unlocking has occurred. The theft-deterrent system will deactivate and the security indicator located on the driver’s door lock will turn off.

If a door is not opened or if the engine is not started within 30 seconds after pressing Unlock on the remote keyless entry transmitter, all of the doors will automatically relock and the theft-deterrent system will reactivate.

(PANIC):
Press this button to turn on the panic alarm feature. The hazard lamps will flash and the panic alarm will stay on for about 28 seconds unless you press the Panic button again.

The LED (A) on the transmitter will flash when the transmitter button is pressed.

The Lock and Unlock buttons will not operate and the theft-deterrent system will not activate while the key is in the ignition.

Matching Transmitter(s) to Your Vehicle
Each remote keyless entry transmitter is coded to prevent another transmitter from unlocking your vehicle. If a transmitter is lost or stolen, a replacement can be purchased through your dealer. Remember to bring any remaining transmitters with you when you go to your dealer. When the dealer matches the replacement transmitter to your vehicle, any remaining transmitters must also be matched. Once your dealer has coded the new transmitter, the lost transmitter will not unlock your vehicle.

Downloaded from www.Manualslib.com manuals search engine

FEATURES AND CONTROLS

Each vehicle can have a maximum of four transmitters matched to it.

Battery Replacement
Under normal use, the battery in your remote keyless entry transmitter should last about two years.

You can tell the battery is weak if the LED (A) fails to illuminate or if the transmitter won't work at the normal range in any location. If you have to get close to your vehicle before the transmitter works, it's probably time to change the battery.

CAUTION

When replacing the battery, use care not to touch any of the circuitry. Static from your body transferred to these surfaces may damage the transmitter.

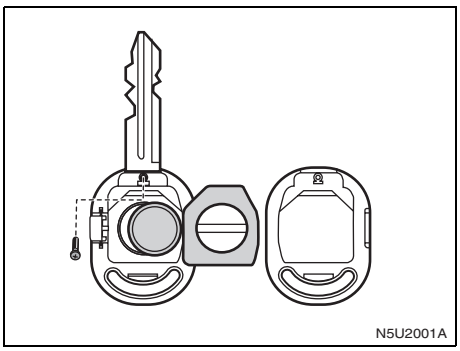

To replace the battery in the remote keyless entry transmitter, do the following:

1) Remove the screw from the back of the cover and open the cover of the transmitter.
2) Pull the transmitter unit out of the cover and open the cover of the transmitter unit.
3) Remove the battery and replace it with the new one. Make sure the positive(+) side of the battery faces up. Use one three-volt, CR1616, or equivalent, type battery.
4) Close the cover of the transmitter unit and put the unit in the cover of the transmitter.
5) Assemble the transmitter cover and replace the screw. Make sure the cover is on tightly, so water won't get in.
6) Check the operation of the transmitter with your vehicle.

⚠ WARNING

Swallowing a lithium battery may cause serious internal injury. Do not allow anyone to swallow a lithium battery. Keep lithium batteries away from children and pets. If swallowed, contact physician immediately.

CAUTION

The transmitter is a sensitive electronic instrument. To avoid damaging the transmitter, do not expose it to dust or moisture or tamper with internal parts.

Downloaded from www.Manualslib.com manuals search engine

Doors and Locks

Door Locks

⚠ WARNING

Unlocked doors can be dangerous.

- **Passengers – especially children – can easily open the doors and fall out of a moving vehicle. When a door is locked, the handle won't open it. You increase the chance of being thrown out of the vehicle in a crash if the doors aren't locked. So, wear safety belts properly and lock the doors whenever you drive.**
- **Young children who get into unlocked vehicles may be unable to get out. A child can be overcome by extreme heat and can suffer permanent injuries or even death from heat stroke. Always lock your vehicle whenever you leave it.**
- **Outsiders can easily enter through an unlocked door when you slow down or stop your vehicle. Locking your doors can help prevent this from happening.**

There are several ways to lock and unlock your vehicle.

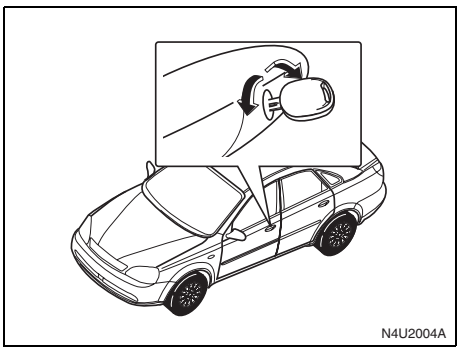

From the outside, use your key or the optional keyless entry transmitter. See "Remote Keyless Entry System" in this section.

To manually unlock all of the doors from the outside, insert the key and turn it toward the front of the vehicle.

To manually lock all of the doors from the outside, insert the key and turn it toward the rear of the vehicle.

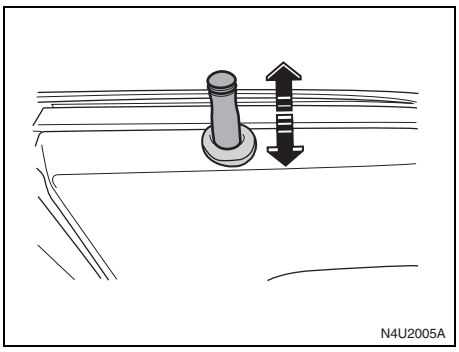

All doors, except the driver's door, can be locked from the outside by pushing down the manual door lock and then closing the door. The driver's door lock cannot be pushed in while the door is open. Upon leaving the vehicle, the driver's door can be locked from the outside only by using the key or the optional remote keyless entry transmitter.

If your vehicle has a security indicator, the indicator will turn off when you unlock the door using the key or the optional keyless entry transmitter. The indicator will turn on when you lock the door using the key or the keyless entry transmitter. The security indicator is located on the driver's door lock.

From the inside, you can lock and unlock all of the doors by pushing or pulling the

Downloaded from www.Manualslib.com manuals search engine

manual door lock located on the window sill on each door.

From the inside, you can also lock and unlock the doors with the power door lock switches located on the driver's door trim pad.

CAUTION

If there is noise when opening or closing the doors or while driving, apply grease to door latch and hinge.

Central Door Locking System

The central door locking system is activated using the switch on the driver's door.

From the outside, you can lock or unlock all of the doors on your vehicle from the driver's door by using either the key or the optional keyless entry transmitter. From the inside, you can lock or unlock all of the doors using the driver's power door lock switch.

Power Door Locks

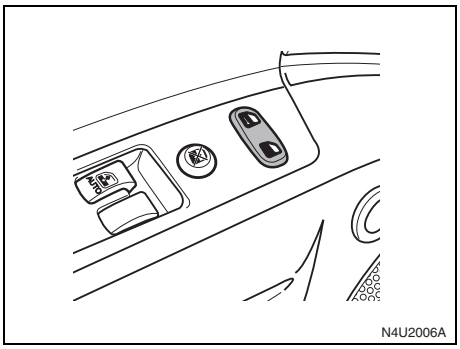

N4U2006A

If your vehicle has this feature you can unlock or lock the doors on your vehicle using the driver's door lock switch. Push down the front part of the switch to unlock the doors. Push down the back part of the switch to lock the doors.

Door Ajar Reminder

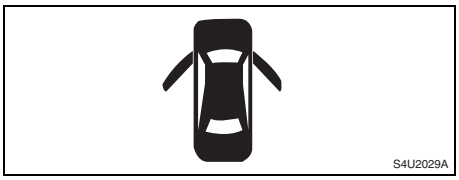

S4U2029A

If one of the doors on your vehicle is not closed completely while the ignition is on, the door ajar light on the instrument panel will come on and stay on until the doors are closed and completely latched.

Rear Door Security Locks

Your vehicle is equipped with rear door security locks on each rear door. This feature helps prevent passengers from opening the rear doors on your vehicle from the inside.

Downloaded from www.Manualslib.com manuals search engine

Using the Rear Door Security Lock

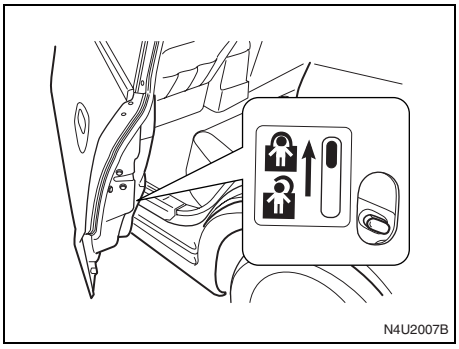

To activate the rear door security lock:

1) Move the lock upward to the lock position.
2) Close the door.
3) Do the same thing to the other rear door lock.

CAUTION

Do not pull the inside door handle when the rear door security locks are engaged. The inside door handle could be damaged.

The rear doors on your vehicle cannot be opened from the inside when this feature is in use.

Opening a Rear Door When the Security Lock is On

1) Unlock the door from the inside.
2) Then open the door from the outside.

If you don't cancel the security lock feature, adults or older children who ride in the rear won't be able to open the rear door from the inside. You should let adults and older children know how to cancel the locks.

Canceling the Rear Door Security Lock

1) Unlock the door from the inside and open the door from the outside.
2) Move the lock downward to the unlock position.
3) Do the same for the other rear door.

The rear door lock will now work normally.

Lockout Protection

If your vehicle is equipped with remote keyless entry, you have lockout protection. This feature stops the driver's door from locking when the power door lock switch is pressed with the driver's door open.

Leaving Your Vehicle

If you are leaving the vehicle, take your keys. All of the doors, except for the driver's door, can be locked from the outside by pushing the door lock down and then closing the door. The driver's door can be locked from the outside only with the key or by using the optional keyless entry transmitter.

Liftgate

⚠ WARNING

It can be dangerous to drive with the liftgate open because carbon monoxide (CO) gas can come into your vehicle. You can't see or smell CO. It can cause unconsciousness and even death. If you must drive with the liftgate open or if electrical wiring or other cable connections must pass through the seal between the body and the liftgate:

- **Make sure all other windows are shut.**
- **Turn the fan on your heating or cooling system to its highest speed and select the control setting that will force outside air into your vehicle. See "Climate Control System" in the Index.**
- **If you have air outlets on or under the instrument panel, open them all the way. See "Engine Exhaust" in the Index.**

Downloaded from www.Manualslib.com manuals search engine

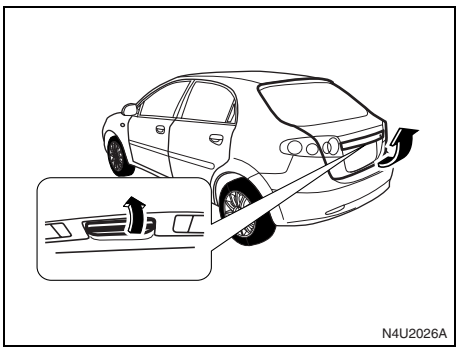
N4U2026A

To open the liftgate from outside of the vehicle, insert the key into the lock cylinder and turn it clockwise. Then pull up the handle above the license plate to open the liftgate.

When closing the liftgate, close from the center to ensure it fully latches. Although you may use one hand to unlock the liftgate, it is recommended that two hands on the upper surface be used to close the liftgate.

To lock the liftgate, insert the key into the lock cylinder and turn it counterclockwise.

The liftgate can also be locked or unlocked using the central door locking system. See "Central Door Locking System" in this section.

Windows

⚠ WARNING

Leaving children in a vehicle with the windows closed is dangerous. A child can be overcome by the extreme heat and can suffer permanent injuries or even death from heat stroke. Never leave a child alone in a vehicle, especially with the windows closed in warm or hot weather.

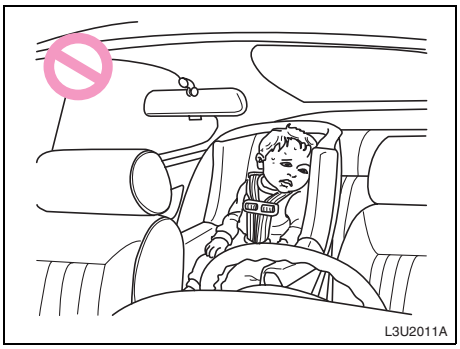
L3U2011A

Manual Windows

On a vehicle with manual windows, use the window crank to open and close each window.

The rear windows do not open fully.

Power Windows

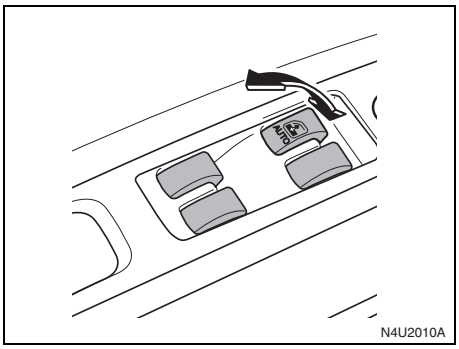
N4U2010A

If your vehicle has this feature, the power window switches are located on the armrest on the driver's door. In addition, each passenger door has a switch for its own window. The ignition must be ON to use the power windows.

To lower a window, press and hold the switch until the window reaches the desired position. To raise the window, pull up and hold the switch till the window reaches the desired position.

Downloaded from www.Manualslib.com manuals search engine

Express-Down Window
The driver's window also has an express-down feature.

This switch is labeled AUTO. Press the switch then release it and the driver's window will go all the way down.

To stop the window while it is lowering, press the switch again. To raise the window, pull up and hold the switch.

Window Lockout

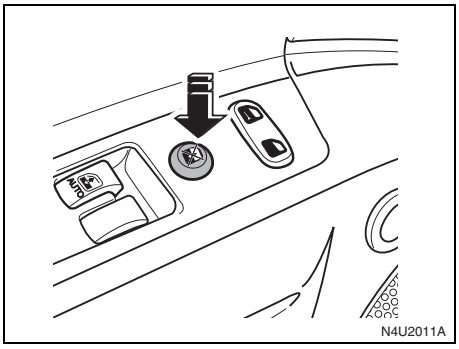

The driver's power window controls also include a lockout button.

Press the lockout button to disable the front and rear passenger window switches. The driver can still operate all the windows with the lock on. Press the lockout button again to return to normal window operation.

Sun Visors

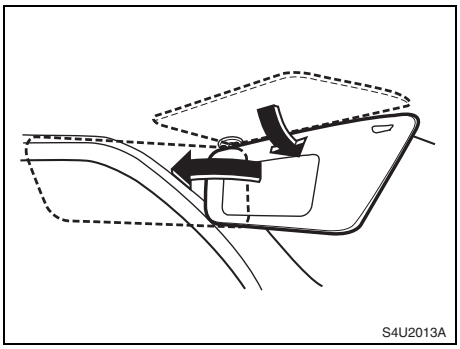

To block out glare, you can swing down the visors. You can also remove them from the center mount and swing them to the side.

Visor Vanity Mirror
Your vehicle has vanity mirrors located on the back of the sun visors. Swing down the sun visor to expose the vanity mirror.

Theft-Deterrent Systems

Vehicle theft is big business, especially in some cities. Although your vehicle has a number of theft-deterrent features, we know that nothing we put on it can make it impossible to steal.

Theft-Deterrent System

Your vehicle may have a theft-deterrent system.

Arming the System
To arm the system, do the following:

1) Turn the ignition switch to the LOCK and remove the key from the ignition. If the key is inserted in the ignition switch, the transmitter will not operate the theft-deterrent system.
2) Close the doors, the windows, the hood, and the trunk. Make sure the windows are closed, as the system can be activated even if the windows are open.
3) Lock the doors using the remote keyless entry transmitter. The transmitter must be used to activate the theft-deterrent system.
   – The LED on the transmitter will flash once.
   – All of the doors will lock.
   – The hazard warning lamps will flash once and the horn will chirp.
   – The theft-deterrent mode will activate.

Downloaded from www.Manualslib.com manuals search engine

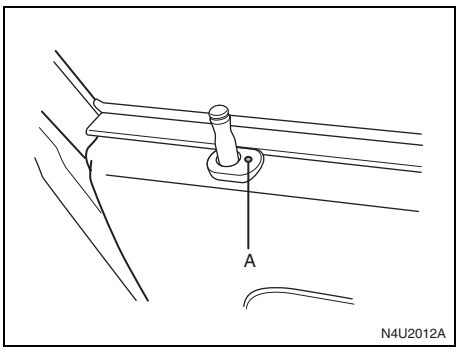

– The security light (A) will flash once every 0.8 seconds to indicate that the theft-deterrent system is armed. The security light is located on the driver's door lock.

To avoid activating the alarm by accident, do the following:

- Lock the vehicle with the key or the manual door lock after the doors are closed if you don't want to arm the theft-deterrent system.
- Unlock the driver's or passenger's front door with the key or use the remote keyless entry transmitter. Pressing the UNLOCK button on the remote keyless entry transmitter disables the theft-deterrent system. Unlocking a door any other way will activate the alarm when a door or the trunk is opened.

The theft-deterrent system will not arm when you lock the doors using the key or the manual door lock. It arms only when you use the remote keyless entry transmitter.

Disarming the System
To disarm the system, do the following:

- Unlock the driver's or passenger's front door using the key, or
- Press the Unlock button on the transmitter.
  - – The LED on the transmitter will flash once.
  - – All of the doors will unlock.
  - – The hazard warning lamps will flash twice.
  - – The theft-deterrent mode will deactivate.

How the System Alarm is Activated
If a door or the trunk is opened without the key or the remote keyless entry transmitter, the horn will sound and the lamps will flash for up to 30 seconds.

The theft-deterrent system won't arm if you lock the doors with the key or use the manual door lock. It activates only if you use the remote keyless entry transmitter.

If the door is not opened or if the engine is not started within 30 seconds after disarming the system with the transmitter, all of the doors will automatically lock and the theft-deterrent mode will reactivate.

How to Turn Off the System Alarm
If the system alarm is active, it can be deactivated using the following methods:

- Press the Lock or Unlock button on the remote keyless entry transmitter.
- Unlock the driver's or passenger's front door using the key.

Otherwise, the alarm will automatically stop after 30 seconds. The system will then lock the doors and reactivate the theft-deterrent system.

How to Detect a Tamper Condition
If the hazard lamps flash once when the Lock or Unlock button on your transmitter is pressed, that means the theft-security system alarm was triggered while you were away.

Downloaded from www.Manualslib.com manuals search engine

Daily Inspection Checklist

Before Driving

1) Make sure that windows, mirrors, lights and reflectors are clean and unobstructed.
2) Visually check the tires for the following points:
   – the depth of the tread groove
   – abnormal wear, cracks and damage
   – loose wheel nuts
   – existence of foreign material such as nails, stones, etc.

Refer to "Tires" in the "SERVICE AND APPEARANCE CARE" section for details.

3) Look for oil or other fluid leaks.

NOTE:
It is normal for water to drip from the air conditioning system after use.

4) Make sure the hood is fully closed and latched.
5) Check the headlights, turn signal lights, brake lights and horn for proper operation.
6) Lock all doors.
7) Adjust the seat and adjustable head restraints (if equipped).
8) Check the brake pedal.
9) Adjust the mirrors.
10) Make sure that you and all passengers have properly fastened your seat belts.
11) Make sure that all warning lights come on as the key is turned to the "ON" or "START" position.
12) Check all gauges.
13) Make sure that the BRAKE light turns off when the parking brake is released.

Once a week, or each time you fill your fuel tank, perform the following under-hood checks:

1) Engine oil level
2) Coolant level
3) Brake fluid level
4) Power steering (if equipped) fluid level
5) Windshield washer fluid level
6) Hood latch operation
   Pull the hood release handle inside the vehicle. Make sure that you cannot open the hood all the way without releasing the secondary latch. Be sure to close the hood securely after checking for proper latch operation. See the item "Lubricate Locks, Hinges & Hood Latch" under "Chassis and Body" in the "MAINTENANCE SCHEDULE" section for the lubrication schedule.

⚠ WARNING

Make sure the hood is fully closed and latched before driving. If it is not, it can fly up unexpectedly during driving, obstructing your view and resulting in an accident.

Starting and Operating Your Vehicle

New Vehicle Break-In

CAUTION

Your vehicle doesn't need an elaborate "break-in." But it will perform better in the long run if you follow these guidelines:

- **Don't drive at any one speed – fast or slow – for the first 500 miles (805 km). Don't make full-throttle starts.**
- **Avoid making hard stops for the first 200 miles (322 km) or so. During this time your new brake linings aren't yet broken in. Hard stops with new linings can mean premature wear and earlier replacement. Follow this break-in guideline every time you get new brake linings.**

Downloaded from www.Manualslib.com manuals search engine

FEATURES AND CONTROLS

Ignition Positions

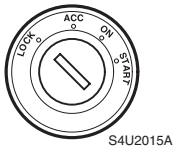

S4U2015A

With the key in the ignition switch, you can turn the key to four different positions.

⚠ WARNING

On manual transmission vehicles, turning the key to LOCK and removing it will lock the steering column and result in a loss of ability to steer the vehicle. This could cause a collision. If you need to turn the engine off while the vehicle is moving, turn the key only to ACC. Don't push the key in while the vehicle is moving.

CAUTION

If your key seems stuck in LOCK and you can't turn it, be sure you are using the correct key; if so, is it all the way in? If it is, then turn the steering wheel left and right while you turn the key hard. Turn the key only with your hand. Using a tool to force it could break the key or the ignition switch. If none of these works, then your vehicle needs service.

LOCK:
This position locks your steering wheel, ignition, automatic transmission shift lever and automatic transmission. This is the only position from which you can remove the key. For easier key operation when unlocking the steering wheel, move the steering wheel back and forth while turning the key to the ACC position.

ACC (ACCESSORY):
This position operates some of your electrical accessories, such as the radio, but not the ventilation fan. Press in the switch as you turn it away from you.

ON:
This is the position to which the switch returns after you start your engine and release the key. The switch stays in ON when the engine is running. But even when the engine is not running, you can use ON to operate your electrical accessories, and to display some instrument panel warning lights.

START:
This position starts the engine. When the engine starts, release the key. The ignition switch will return to ON for normal driving. Do not turn the key to START if the engine is running.

Even if the engine is not running, ACC and ON allow you to operate electrical accessories, such as the radio.

Starting Your Engine

Automatic Transmission
Move your shift lever to PARK (P) or NEUTRAL (N). Your engine won't start in any other position – that's a safety feature. To restart when you're already moving, use NEUTRAL (N) only.

CAUTION

Don't try to shift to PARK (P) if your vehicle is moving. If you do, you could damage the transmission. Shift to PARK (P) only when your vehicle is stopped.

Manual Transmission
The gear selector should be in NEUTRAL and the parking brake engaged. Hold the clutch pedal to the floor and start the engine. Your vehicle won't start if the clutch pedal is not all the way down.

Starting Your Engine
1) With your foot off the accelerator pedal, turn your ignition key to START. When the engine starts, let go of the key. The idle speed will go down as your engine gets warm.

Downloaded from www.Manualslib.com manuals search engine

CAUTION

Holding your key in START for longer than 15 seconds at a time will cause your battery to be drained much sooner. And the excessive heat can damage your starter motor. Wait about 15 seconds between each try to help avoid draining your battery or damaging your starter.

2) If it doesn't start, wait about 15 seconds and try again to start the engine by turning the ignition key to START. Wait about 15 seconds between each try. When your engine has run about 10 seconds to warm up, your vehicle is ready to be driven. Don't "race" your engine when it's cold. If the weather is below freezing (32°F or 0°C), let the engine run for a few minutes to warm up.
3) If your engine still won't start (or starts but then stops), it could be flooded with too much gasoline. Try pushing your accelerator pedal all the way to the floor and holding it there as you hold the key in START for about three seconds. If the vehicle starts briefly but then stops again, do the same thing, but this time keep the pedal down for five or six seconds. This clears the extra gasoline from the engine.

CAUTION

Your engine is designed to work with the electronics in your vehicle. If you add electrical parts or accessories, you could change the way the engine operates. Before adding electrical equipment, check with your dealer. If you don't, your engine might not perform properly.

Automatic Transmission Operation

If your vehicle is equipped with an automatic transmission, the shift lever is located on the console between the seats.

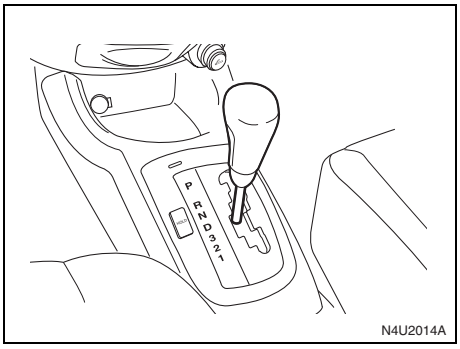

Movement between certain positions requires pushing the shift lever to the passenger side while shifting. This prevents you from changing positions unexpectedly by blocking the straight movement of the shift lever when the vehicle is moving.

PARK (P):
This position locks your front wheels. It's the best position to use when you start your engine because your vehicle can't move easily. Also, this is the only position from which you can remove the key after turning it to LOCK.

⚠ WARNING

It is dangerous to get out of your vehicle if the shift lever is not fully in PARK (P) with the parking brake firmly set. Your vehicle can roll.
Don't leave your vehicle when the engine is running unless you have to. If you have left the engine running, the vehicle can move suddenly. You or others could be injured. To be sure your vehicle won't move, even when you're on fairly level ground, always set your parking brake and move the shift lever to PARK (P). See "Shifting Into Park (P)" in the Index.

Ensure the shift lever is fully in PARK (P) before starting the engine. Your vehicle has an automatic transmission shift lock control system. You have to apply your regular brakes before you can shift from PARK (P) when the ignition is in the ON position. If you cannot shift out of PARK (P), ease pressure on the shift lever – push

Downloaded from www.Manualslib.com manuals search engine

FEATURES AND CONTROLS

the shift lever all the way into PARK (P) – as you maintain brake application. Then move the shift lever into the gear you wish. See “Shifting Out of Park (P)” on a later page in this section.

REVERSE (R):
Use this gear to back up. In order to move from NEUTRAL (N) to REVERSE (R), you must press down on the shift lever while shifting.

CAUTION

Shifting to REVERSE (R) while your vehicle is moving forward could damage your transmission. The repairs would not be covered by your warranty. Shift to REVERSE (R) only after your vehicle is stopped.

To rock your vehicle back and forth to get out of snow, ice or sand without damaging your transmission, see “If You Are Stuck: In Sand, Mud, Ice or Snow” in section 4.

NEUTRAL (N):
In this position, your engine doesn’t connect with the wheels. To restart when you’re already moving, use NEUTRAL (N) only. Also, use NEUTRAL (N) when your vehicle is being towed.

⚠ WARNING

Shifting into a drive gear while your engine is “racing” (running at high speed) is dangerous. Unless your foot is firmly on the brake pedal, your vehicle could move very rapidly. You could lose control and hit people or objects. Don’t shift into a drive gear while your engine is racing.

CAUTION

Damage to your transmission caused by shifting into a drive gear with the engine racing isn’t covered by your warranty. Be sure the engine is not racing when shifting your vehicle.

AUTOMATIC OVERDRIVE (D):
This position is for normal driving.

THIRD (3):
This position is also used for normal driving, however, it offers more power and lower fuel economy than AUTOMATIC OVERDRIVE (D). Here are some times you might choose THIRD (3) instead of AUTOMATIC OVERDRIVE (D):

- When driving on hilly, winding roads.
- When doing down a steep hill.

SECOND (2):
This position gives you more power than THIRD (3) but lower fuel economy. You can use SECOND (2) on hills. It can help control your speed as you go down steep mountain roads, but then you would also want to use your brakes off and on.

CAUTION

Don’t drive in SECOND (2) at speeds over 65 mph (105 km/h), or you can damage your transmission. Use THIRD (3) or AUTOMATIC OVERDRIVE (D) as much as possible. Don’t shift into SECOND (2) unless you are going slower than 65 mph (105 km/h) or you can damage your engine.

FIRST (1):
This position gives you even more power than SECOND (2) but lower fuel economy. You can use it on very steep hills, or in deep snow or mud. If the shift lever is put in FIRST (1), the transmission won’t shift into first gear until the vehicle is going slowly enough.

Downloaded from www.Manualslib.com manuals search engine

CAUTION

If your front wheels won't turn, don't try to drive. This might happen if you were stuck in very deep sand or mud or were up against a solid object. You could damage your transmission. Also, if you stop when going uphill, don't hold your vehicle there with only the accelerator pedal. This could overheat and damage the transmission. Use your brakes to hold your vehicle in position on a hill.

Fuzzy Function

Your automatic transmission will automatically select a adaptive shift pattern using fuzzy logic.

- Economy mode is applied as often as possible.

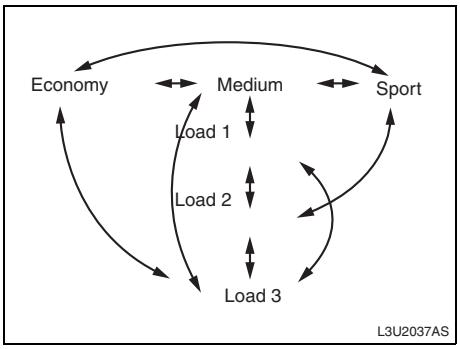

- Driver adaptive shift patterns are activated for a minimum time.
- "Load 1" is designed for a driving on moderate road gradients.
- "Load 2" is active while going up steep hills.
- "Load 3" is intended for downhill driving for better engine braking.

CAUTION

The first few shifts may be somewhat rough on a new vehicle. This is normal condition and shift feel will improve soon because the automatic transmission control system performs adaptation functions.

Emergency Operation

If the automatic transmission experiences a malfunction, the malfunction indicator lamp (MIL) or the HOLD mode light may come on or may blink. In this situation, automatic shifting can be canceled or can default to a severe condition mode.

You should consult your dealer and have the problem repaired as soon as possible when this condition occurs.

Hold Mode

You can select this mode to drive with some characteristics of a manual transmission. With the HOLD mode turned on, the automatic transmission will stay in a specific gear range.

Downloaded from www.Manualslib.com manuals search engine

FEATURES AND CONTROLS

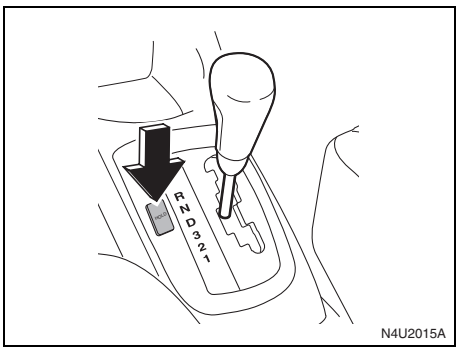

Press the HOLD button on the shift lever to turn on the HOLD mode.

While on, the HOLD indicator light on the instrument panel will light up. See “Hold Mode Light” in section 3. Press the button again to turn off the HOLD mode, and return to normal automatic transmission operation.

When the hold mode is activated, the transmission operates as follows:

Selector Lever Position	Gear range
D	$2^{nd} \leftrightarrow 3^{rd} \leftrightarrow 4^{th}$ (mainly 4th gear)
3	$2^{nd} \leftrightarrow 3^{rd}$ (mainly 3rd gear)
2	2nd (fixed)
1	1st (fixed)

Function Features of HOLD Mode

Winter function
When a vehicle is on a slippery road such as one that is covered with snow, mud etc., the vehicle can be easily overcome the slippery road conditions by activating the hold mode with the transmission selector lever in the D, 3 or 2-position.

To avoid busy shifting
Fuzzy logic is applied to avoid busy shifting in most hilly driving conditions. Using the HOLD button & shifting into the 3-position are other ways to avoid busy shifting in case fuzzy logic is not sufficient.

Driving like manual transmission
When in the hold mode condition, you can use the automatic transmission as a 4-speed manual transmission.

Manual Transmission Operation

Five-Speed

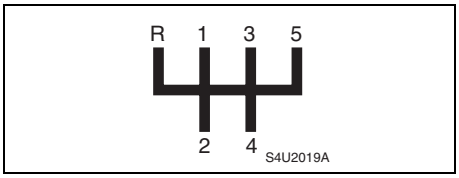

This is your shift pattern.

Here’s how to operate your manual transmission:

FIRST (1):
Press the clutch pedal and shift into FIRST (1). Then, slowly let up on the clutch pedal as you press the accelerator pedal.

You can shift into FIRST (1) when you’re going less than 20 mph (32 km/h). If you’ve come to a complete stop and it’s hard to shift into FIRST (1), put the shift lever in NEUTRAL and let up on the clutch. Press the clutch pedal back down. Then shift into FIRST (1).

SECOND (2):
Press the clutch pedal as you let up on the accelerator pedal and shift into SECOND (2). Then, slowly let up on the clutch pedal as you press the accelerator pedal.

THIRD (3), FOURTH (4) and FIFTH (5):
Shift into THIRD (3), FOURTH (4) and FIFTH (5), the same way you do for SEC-

Downloaded from www.Manualslib.com manuals search engine

OND (2). Slowly let up on the clutch pedal as you press the accelerator pedal.

To stop, let up on the accelerator pedal and press the brake pedal. Just before the vehicle stops, press the clutch pedal and brake pedal, and shift to NEUTRAL.

NEUTRAL:
Use this position when you start or idle your engine.

REVERSE (R):
To back up, press down the clutch pedal, lift up the ring on the shift lever and shift into REVERSE (R). Let up on the clutch pedal slowly while pressing the accelerator pedal.

CAUTION

Shift into REVERSE (R) only after your vehicle is stopped. Shifting into REVERSE (R) while your vehicle is moving could damage your transmission. The repairs would not be covered by your warranty.

Also, use REVERSE (R), along with the parking brake, for parking your vehicle.

Shift Speed

⚠ WARNING

If you skip a gear when you downshift, you could lose control of your vehicle. You could injure yourself or others. Don't shift down more than one gear at a time when you downshift.

Parking Brake

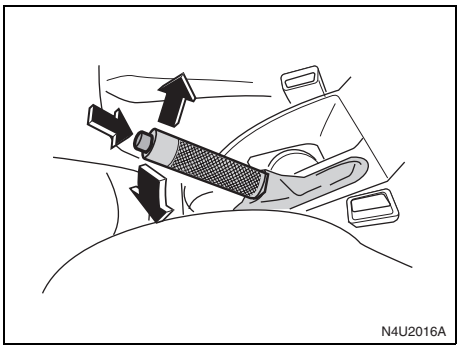

The parking brake lever is located between the bucket seats.

To set the parking brake, hold the brake pedal down and pull up on the parking brake lever. If the ignition is on, the brake system warning light will come on.

To release the parking brake, hold the brake pedal down. Pull the parking brake lever up until you can press the release button. Hold the release button in as you move the brake lever all the way down.

Winter parking tip
Under cold weather conditions, the parking brake can freeze in the engaged position. This is most likely to happen if the brakes are wet.

If there is a risk that the parking brake may freeze after driving through water deep enough to wet brake components or after having the vehicle washed:

1) Apply the parking brake only temporarily while you put the gear selector lever in PARK (P) (for automatic transaxle) or in first or reverse gear (for manual transaxle).
2) Block the rear wheels with wedge blocks.
3) Release the parking brake.

CAUTION

Driving with the parking brake on can cause your rear brakes to overheat. You may have to replace them, and you could also damage other parts of your vehicle. Verify that the parking brake is fully released and the brake warning light is off before driving.

Downloaded from www.Manualslib.com manuals search engine

FEATURES AND CONTROLS

Shifting Into Park (P) (Automatic Transmission)

⚠ WARNING

It is dangerous to get out of your vehicle if the shift lever is not fully in PARK (P) with the parking brake firmly set. Your vehicle can roll. Don't leave your vehicle when the engine is running unless you have to. If you have left the engine running, the vehicle can move suddenly. You or others could be injured. To be sure your vehicle won't move, even when you're on fairly level ground, use the steps that follow.

1) Hold the brake pedal down and set the parking brake.
2) Move the shift lever into the PARK (P) position.
3) Turn the ignition key to LOCK.
4) Remove the key and take it with you. If you can leave your vehicle with the ignition key in your hand, your vehicle is in PARK (P).

Leaving Your Vehicle with the Engine Running

⚠ WARNING

It can be dangerous to leave your vehicle with the engine running. Your vehicle could move suddenly if the shift lever is not fully in PARK (P) with the parking brake firmly set. And, if you leave the vehicle with the engine running, it could overheat and even catch fire. You or others could be injured. Don't leave your vehicle with the engine running.

If you have to leave your vehicle with the engine running, be sure your vehicle is in PARK (P) and your parking brake is firmly set before you leave it. After you've moved the shift lever into PARK (P), hold the regular brake pedal down. Then, see if you can move the shift lever away from PARK (P) without first pushing the button. If you can, it means that the shift lever wasn't fully locked into PARK (P).

Torque Lock

If you are parking on a hill and you don't shift your transmission into PARK (P) properly, the weight of the vehicle may put too much force on the parking pawl in the transmission. You may find it difficult to pull the shift lever out of PARK (P). This is called "torque lock." To prevent torque lock, set the parking brake and then shift into PARK (P) properly before you leave the driver's seat. To find out how, see "Shifting Into Park (P)" in this section.

When you are ready to drive, move the shift lever out of PARK (P) before you release the parking brake.

If torque lock does occur, you may need to have another vehicle push yours a little uphill to take some of the pressure from the parking pawl in the transmission, so you can pull the shift lever out of PARK (P).

Shifting Out of Park (P) (Automatic Transmission)

Your vehicle has a brake transmission shift interlock system which locks the shift lever in PARK (P) when the ignition is in the LOCK position. You have to apply your regular brakes before you can shift from PARK (P) when the ignition is in the ON position. See "Automatic Transmission Operation" in this section.

If you cannot shift out of PARK (P) while you hold the brake pedal down, try this:

Downloaded from www.Manualslib.com manuals search engine

1) Set the parking brake fully.
2) Turn the key to LOCK and remove the key from the ignition switch.
3) Remove the hole cover from the shift lock slot with a screwdriver

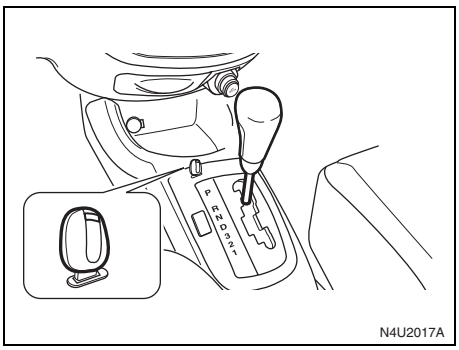

4) Insert the key into the shift lock slot and press and hold it.
5) Shift to NEUTRAL (N).
6) Remove the key from the slot, insert it into the ignition switch and start the engine.
7) Apply and hold the regular brake fully and release the parking brake.
8) Shift to the drive gear you want.
9) Have your vehicle fixed as soon as you can.

Parking Your Vehicle (Manual Transmission)

Before leaving your vehicle, do the following:

1) Hold the brake pedal down and firmly apply the parking brake.
2) Fully press in the clutch pedal and place the shift lever into the appropriate position as stated below:
   – When parking on level ground, place the shift lever into FIRST(1) or REVERSE(R).
   – When parking downhill, place the shift lever in REVERSE (R).
   – When parking uphill, place the shift lever in FIRST (1).
3) After shifting to the appropriate position, turn the ignition key to LOCK, remove the key and release the clutch.

Parking Over Things That Can Burn

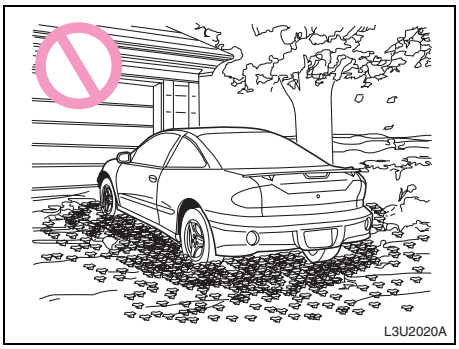

⚠ WARNING

Things that can burn could touch hot exhaust parts under your vehicle and ignite. Don't park over papers, leaves, dry grass or other things that can burn.

Downloaded from www.Manualslib.com manuals search engine

FEATURES AND CONTROLS

Engine Exhaust

⚠ WARNING

Engine exhaust can kill. It contains the gas carbon monoxide (CO), which you can't see or smell. It can cause unconsciousness and death.
You might have exhaust coming in if:
- **Your exhaust system sounds strange or different.**
- **Your vehicle gets rusty underneath.**
- **Your vehicle was damaged in a collision.**
- **Your vehicle was damaged when driving over high points on the road or over road debris.**
- **Repairs weren't done correctly.**
- **Your vehicle or exhaust system had been modified improperly.**

If you ever suspect exhaust is coming into your vehicle:
- **Drive it only with all the windows down to blow out any CO; and**
- **Have your vehicle fixed immediately.**

Running Your Engine While You Are Parked

It's better not to park with the engine running. But if you ever have to, here are some things to know.

⚠ WARNING

Idling the engine with the climate control system off could allow dangerous exhaust into your vehicle. See the earlier Warning under "Engine Exhaust."
Also, idling in a closed-in place can let deadly carbon monoxide (CO) into your vehicle even if the climate control fan is at the highest setting. One place this can happen is a garage. Exhaust – with CO – can come in easily. NEVER park in a garage with the engine running.
Another closed-in place can be a blizzard. See "Winter Driving" in the Index.

⚠ WARNING

It is dangerous to get out of your vehicle if the shift lever is not fully in PARK (P) or the appropriate position with the parking brake firmly set. Your vehicle can roll. To determine the appropriate position, see "Parking Your Vehicle". Don't leave your vehicle when the engine is running unless you have to. If you've left the engine running, the vehicle can move suddenly. You or others could be injured. To be sure your vehicle won't move, even when you're on fairly level ground, always set your parking brake and move the shift lever to PARK (P) or the appropriate position as described under "Parking Your Vehicle".

Follow the proper steps to be sure your vehicle won't move. See "Shifting Into Park (P)" or "Parking Your Vehicle (Manual Transmission)" in this section.

Downloaded from www.Manualslib.com manuals search engine

Mirrors

Manual Rearview Mirror

When you are sitting in a comfortable driving position, adjust the mirror so you can see clearly behind your vehicle. Grip the mirror in the center to move it up or down and from side to side.

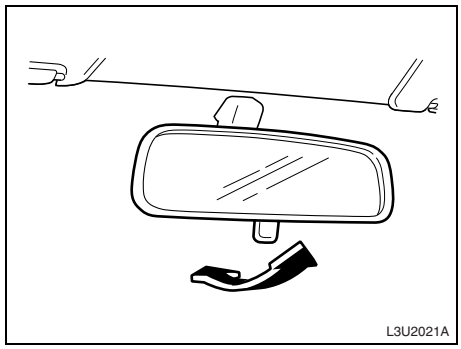

The day/night adjustment allows you to adjust the mirror to avoid glare from any headlamps behind you. Push or pull the tab for daytime/night use.

Outside Manual Mirror

The outside rearview mirrors should be adjusted so you can see a little of the side of your vehicle when you are sitting in a comfortable driving position.

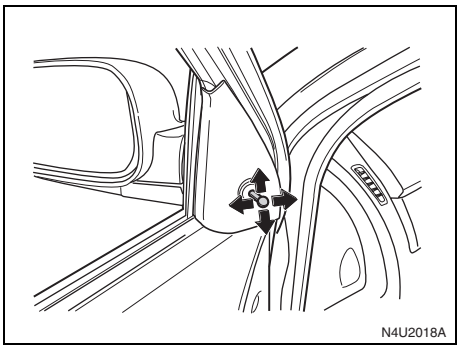

Adjust the outside mirrors with the control levers on the driver's and passenger's doors.

The outside rearview mirrors can be folded flat against the side of the vehicle by pushing them toward the vehicle.

Outside Power Mirrors

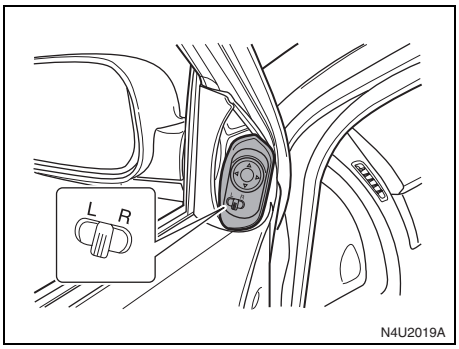

If your vehicle has this feature, the control for the power mirrors is located on the driver's side door trim.

Move the outside power mirror control to "L" to adjust the left mirror and to "R" to adjust the right mirror. If you place the control in the center position, no movement of the mirror will occur. To adjust a mirror, press the corresponding edges located on the four-way control pad to move the mirror in the direction that you want it to go. The ignition must be to ON to adjust the mirrors.

The outside rearview mirrors can be folded flat against the side of the vehicle by pushing them toward the vehicle.

Downloaded from www.Manualslib.com manuals search engine

Outside Convex Mirror

Your passenger's side mirror is convex. A convex mirror's surface is curved so you can see more from the driver's seat.

⚠ WARNING

A convex mirror can make things (like other vehicles) look farther away than they really are. If you cut too sharply into the right lane, you could hit a vehicle on your right. Check your inside mirror or glance over your shoulder before changing lanes.

Outside Heated Mirrors

If your vehicle has this feature, when you operate the rear window defogger, the heated driver's and passenger's outside power mirrors are warmed to help clear them of ice and snow. See "Rear Window and Outside Mirror Defogger" under "Climate Control System" in section 3 for more information.

Storage Areas

Glove Box

The glove box is located in front of the passenger's seat on the instrument panel.

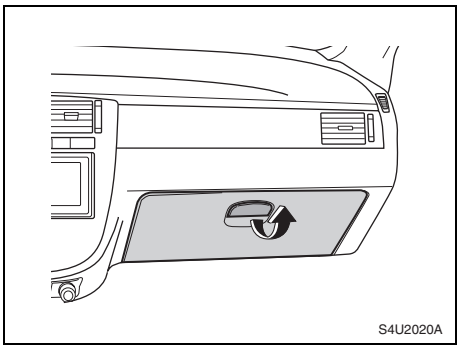

Open the glove box by pulling the bottom of the handle upward. Close the glove box with a firm push.

⚠ WARNING

Never drive with the glove box lid open. It could cause injury if an accident occurs.

Cupholder(s)

The cupholders are located in the center console and in the rear seat center armrest.

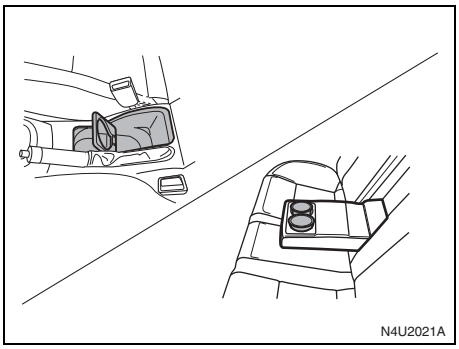

To use the front cupholder, move the inner support forward or backward. If your vehicle has rear cupholders, push down the rear seat center armrest to use them.

Downloaded from www.Manualslib.com manuals search engine

Storage Areas:

Sunglasses Storage Compartment

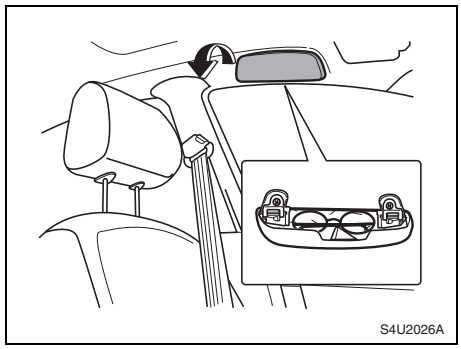

The sunglasses storage compartment is located above the driver's door.

To open the sunglasses storage compartment, pull down and hold the upper part of the cover. To close the compartment, let go of the cover and the compartment will automatically close.

Front Storage Area

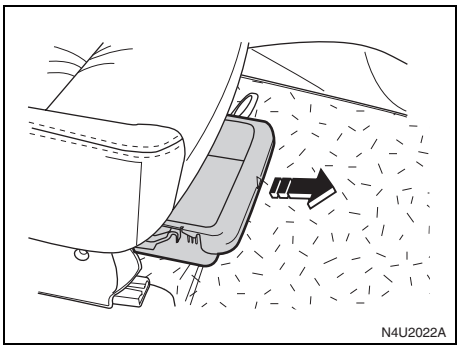

Your vehicle may have a sliding storage tray located under the front passenger seat. To use the tray, pull up on the end of the tray and pull it toward the instrument panel. Push the tray toward the seat to return it to its original position.

Front Armrest Storage Area

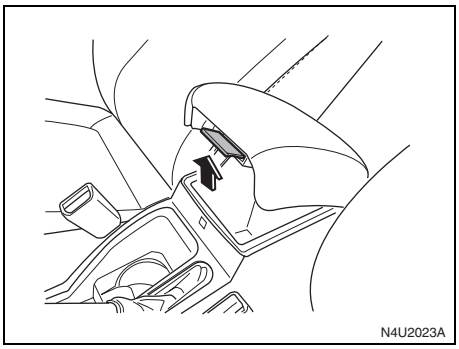

Your vehicle has a front armrest storage area. To open the storage area, pull up on the lift lever and raise the lid. To close the storage area, lower the lid and push it down until it latches securely.

Downloaded from www.Manualslib.com manuals search engine

Rear Seat Armrest

Your vehicle's rear seat armrest may contain two cupholders. To access the cupholders, pull the armrest down from the rear seatback.

Antenna

The antenna is located in the windshield glass. Be sure that the inside surface of the windshield glass is not scratched and that the lines on the glass are not damaged. If the inside surface is damaged, it could interfere with radio reception.

Because this antenna is built into your windshield glass, there is a reduced risk of damage caused by car washes and vandals.

⚠ WARNING

Using a razor blade or sharp object to clear the inside rear window or windshield glass may damage the antenna and/or the rear window defogger. Repairs would not be covered by your warranty. Do not clear the inside of the windshield glass or rear window with sharp objects.

⚠ WARNING

Do not apply aftermarket glass tinting with metallic film. The metallic film in some tinting materials will interfere with or distort the incoming radio reception. Any damage caused to your antenna due to metallic tinting materials will not be covered by your warranty.

If you choose to add a cellular telephone to your vehicle, and the antenna needs to be attached to the glass, be sure that you do not damage the grid lines for the antenna. There is enough space between the lines to attach a cellular telephone antenna without interfering with radio reception.

Do not apply aftermarket glass tinting to the back glass. The metallic film in some tinting materials will interfere with or distort the incoming radio reception. Care must be taken when cleaning the rear window or windshield glass to avoid causing breaks in the resistive material heating element which can adversely affect radio and defogger performance. See your dealer for details.

Sunroof

If your vehicle has this feature, the switch is located between the map lamp buttons. The sunroof will only operate when the ignition is in the ON position. The sunroof can be opened to a vent position or it can be opened all the way.

You must manually open and close the sunroof cover.

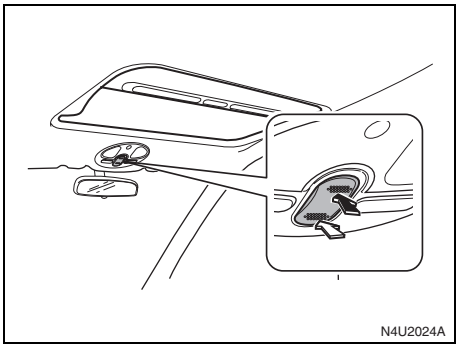

To open the sunroof to the vent position, push the front part of the switch. To return the sunroof to its original position, push the rear part of the switch and hold it until the sunroof reaches the desired position.

To fully open the sunroof, push the rear part of the switch. The sunroof will open automatically until you push either the front or the rear part of the switch again. To close the sunroof, push the front part of the

Downloaded from www.Manualslib.com manuals search engine

switch and hold it until the sunroof is closed. The sunroof will stop if the switch is released during operation.

In both the vent and fully open positions, the air flow can be adjusted for driving comfort by pushing and holding the switch until the sunroof moves to the desired position.

The sunroof glass panel cannot be opened or closed if your vehicle has an electrical failure.

⚠ WARNING

- **Never allow any part of your body such as hands or head to stick out of the sunroof opening while the vehicle is moving.**
- **Be sure there are no hands or other obstructions in the path of the sunroof when you close the sunroof.**
- **Always remove the ignition key when leaving the vehicle even if for a short time. Also do not leave children alone in a parked vehicle. Unattended children could use the sunroof switches and get trapped by the sunroof.**
- **Do not put your body weight on the roof around the sunroof such as by sitting on it.**
- **When leaving the vehicle unattended, close the sunroof fully.**

Downloaded from www.Manualslib.com manuals search engine

MEMO

Downloaded from www.Manualslib.com manuals search engine

INSTRUMENT PANEL

Instrument Panel Overview 3-1
Climate Controls 3-12
Warning Lights, Gauges and Indicators 3-18
Audio System 3-27

Downloaded from www.Manualslib.com manuals search engine

INSTRUMENT PANEL

Instrument Panel Overview

The main components of your instrument panel are the following:

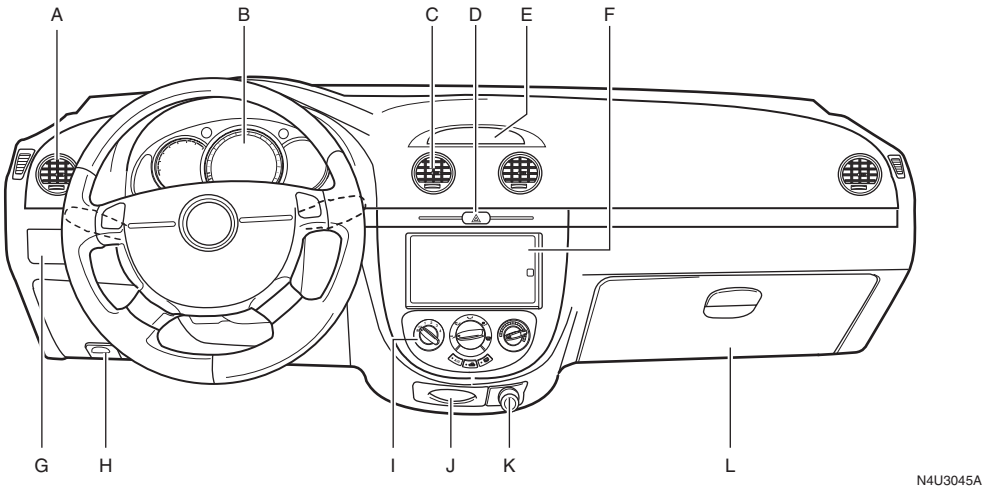

A. Air Outlet
B. Instrument Panel Cluster
C. Air Outlet
D. Hazard Warning Flashers Button
E. Digital Clock
F. Audio System
G. Instrument Panel Brightness Control
H. Hood Release
I. Climate Control System
J. Ashtray
K. Cigarette Lighter
L. Glove Box

Downloaded from www.Manualslib.com manuals search engine

Instrument Panel Overview:

Hazard Warning Flashers

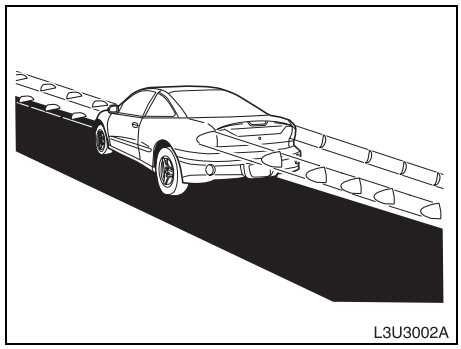

Your hazard warning flashers let you warn others. They also let police know you have a problem. Your front and rear turn signal lamps will flash on and off.

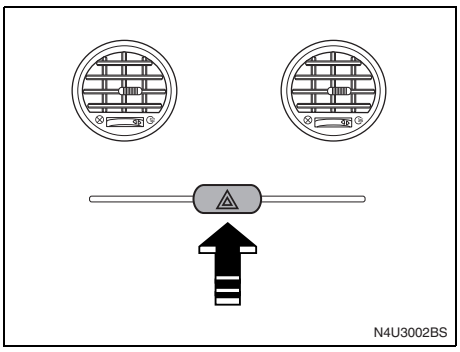

The hazard warning flasher button is located on the center of the instrument panel.

Your hazard warning flashers work no matter what position your key is in, and even if the key isn't in.

Press the button to make the front and rear turn signal lamps flash on and off. Press the button again to turn the flashers off.

When the hazard warning flashers are on, your turn signals won't work. Make sure the hazard warning flasher button is turned off all the way for normal turn signal operation.

Other Warning Devices

If you carry reflective triangles, you can set one up at the side of the road about 300 feet (100m) behind your vehicle.

Horn

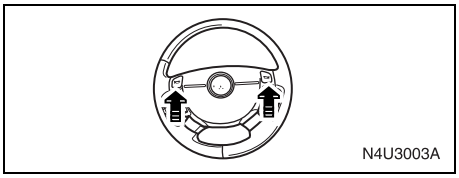

You can sound the horn by pressing the horn symbol on your steering wheel.

Downloaded from www.Manualslib.com manuals search engine

INSTRUMENT PANEL

Tilt Wheel

Your vehicle has a tilt wheel which allows you to adjust the steering wheel before you drive. You can raise it to the highest level to give your legs more room when you exit and enter the vehicle.

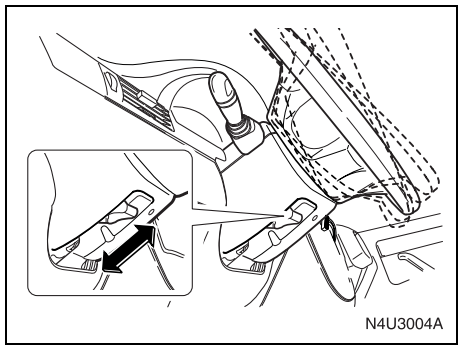

The lever that allows you to tilt the steering wheel is located under the steering column.

To tilt the wheel, hold the wheel and push the lever away from you. Then, move the wheel to a comfortable position and pull the lever toward you to lock the wheel in place.

⚠ WARNING

Never attempt to adjust the steering wheel height while the vehicle is moving or you could lose control of the vehicle.

Turn Signal/Multifunction Lever

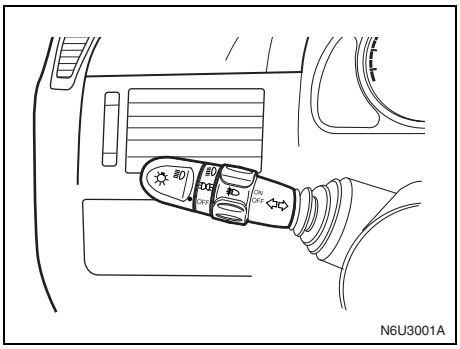

The lever on the left side of the steering column includes the following:

- Turn and Lane-Change Signals
- Fog Lamps, if available
- Headlamp High/Low-Beam Changer
- Flash-to-Pass

For information on the exterior lamps, see “Exterior Lamps” in this section.

Turn and Lane-Change Signals

The turn signal has three positions. The upward and downward positions allow you to signal a turn or a lane change. At the center position, the turn signal is off.

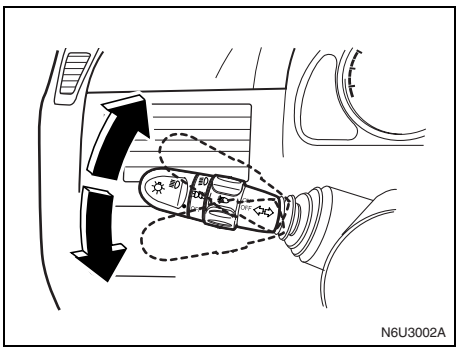

To signal a turn, move the lever all the way up or down. When the turn is finished, the lever will return automatically.

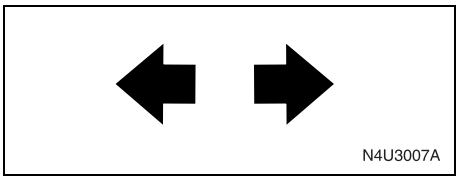

An arrow on the instrument panel cluster will flash in the direction of the turn or lane change.

To signal a lane change, just raise or lower the lever until the arrow starts to flash. Hold it there until you complete your lane change. The lever will return by itself when you release it.

Downloaded from www.Manualslib.com manuals search engine

Instrument Panel Overview:

As you signal a turn or a lane change, if the arrows flash rapidly, a signal bulb may be burned out and other drivers won't see your turn signal.

If a bulb is burned out, replace it to help avoid an accident. If the arrows don't go on at all when you signal a turn, check for burned-out bulbs and then check the fuse. See "Fuses and Circuit Breakers" in section 5.

Headlamp High/Low-Beam Changer

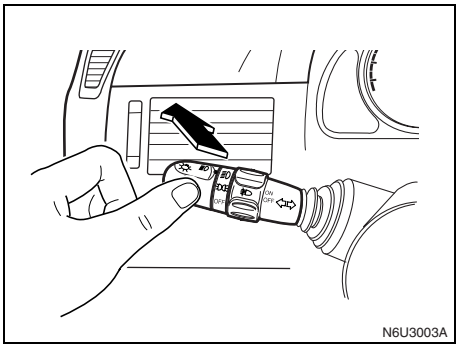

To change the headlamps from low beam to high beam, push the turn signal multifunction lever away from you.

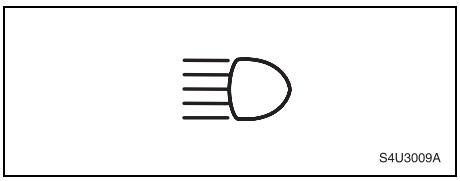

When the high beams are on, a light on the instrument panel cluster also will be on if the ignition is ON.

To change the headlamps from high beam to low beam, pull the turn signal/multifunction lever toward you.

Flash-to-Pass Feature

This feature lets you use your high-beam headlamps to signal a driver in front of you that you want to pass.

To use it, pull the turn signal/multifunction lever toward you until the high-beam headlamps come on, then release the lever to turn them off.

Windshield Wiper/Washer Lever

The windshield wiper/washer lever is located on the right side of the steering wheel.

Windshield Wiper

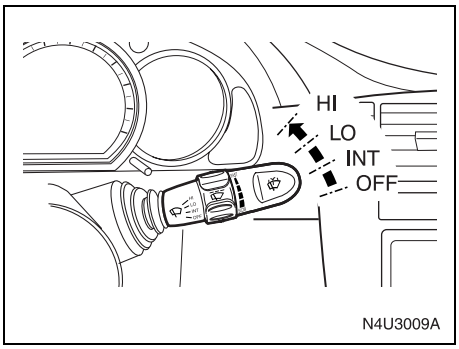

Use the windshield wiper/washer lever to operate the windshield wipers.

HI (High Speed):
Move the lever to this position for wiping at high speed.

LO (Low Speed):
Move the lever to this position for steady wiping at low speed.

INT (Intermittent):
Move the lever to this position to choose a delayed wiping cycle. Turn the band on the windshield wiper lever toward FAST or SLOW for a shorter or longer delay

Downloaded from www.Manualslib.com manuals search engine

INSTRUMENT PANEL

between wipes. The wiper speed can only be adjusted when the lever is in the INT position.

OFF (Off):
Move the lever to this position to turn off the windshield wipers.

Misting Function
Move the lever toward, but not completely in, the INT position for a single wiping cycle. Hold it there until the windshield wipers start; then let go. The windshield wipers will stop after one cycle. If you want more wipes, hold the lever toward the INT position longer.

Remember that damaged wiper blades may prevent you from seeing well enough to drive safely. To avoid damage, be sure to clear ice and snow from the wiper blades before using them.

If they're frozen to the windshield, carefully loosen or thaw them. If your blades do become damaged, get new blades or blade inserts.

Heavy snow or ice can overload the wiper motor. A circuit breaker will stop the motor until it cools. Clear away snow or ice to prevent an overload.

Windshield Washer

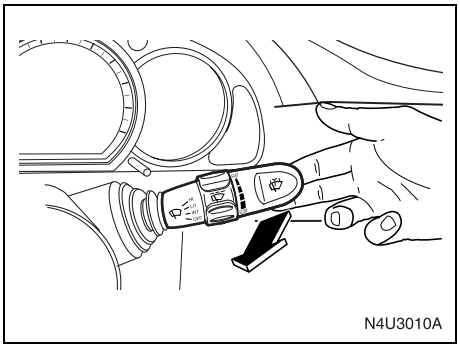

To wash your windshield, pull the windshield wiper/washer lever toward you with the ignition in the ON position.

When you release the lever, the washers will stop, but the wipers will continue to wipe for about three cycles and will either stop or will resume the speed you were using before.

⚠ WARNING

- **In freezing weather, don't use your washer until the windshield is warmed. Otherwise the washer fluid can form ice on the windshield, blocking your vision.**
- **Do not use radiator antifreeze in the windshield washer reservoir. It can severely impair visibility when sprayed on the windshield, and can also damage your vehicle's paint.**

Downloaded from www.Manualslib.com manuals search engine

Instrument Panel Overview:

CAUTION

To help prevent damage to windshield wiper and washer system components, you should take the following precautions:

- **Do not continue to hold in the lever when there is no windshield washer fluid being sprayed or the washer motor can be damaged.**
- **Do not attempt to remove dirt from a dry windshield with the wipers or you can damage the windshield and the wiper blades. Always wet the windshield with washer fluid before operating the wipers.**
- **Clear ice or packed snow from the wiper blades before using the wipers.**
- **Check the washer fluid level regularly. Check it often when the weather is bad.**
- **Only fill the washer fluid reservoir 3/4 full during cold weather to allow room for expansion if the temperature falls low enough to freeze the solution.**

Rear Window Washer/Wiper

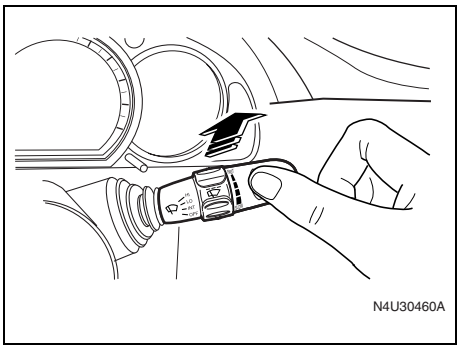

If your vehicle has this feature, operate the rear window washer/wiper system by pushing the windshield wiper/washer lever away from you. The wiper operates continuously when the lever is in the first position.

Washer fluid sprays onto the rear window and the wiper operates continuously when the lever is pushed to the second position.

⚠ WARNING

- **Do not spray washer fluid on the liftgate window in freezing weather.**
- **Warm the tailgate window before you operate the liftgate window washer.**

Washer fluid can form ice on a frozen liftgate window and obstruct your vision.

Cruise Control

Cruise Control

If your vehicle has cruise control, you can maintain a speed of about 24 mph (39 km/h) or more without keeping your foot on the accelerator. This can really help on long trips. Cruise control does not work at speeds below 24 mph (39 km/h).

When you apply your brakes, or depress the clutch pedal if you have a manual transmission, the cruise control shuts off.

⚠ WARNING

Cruise control can be dangerous where you cannot drive safely at a steady speed. So, do not use your cruise control on winding roads or in heavy traffic.

Cruise control can be dangerous on slippery roads. On such roads, fast changes in tire traction can cause excessive wheel slip, and you could lose control. Do not use cruise control on slippery roads.

Downloaded from www.Manualslib.com manuals search engine

INSTRUMENT PANEL

Setting Cruise Control

⚠ WARNING

If you leave your cruise control on when you are not using cruise, you might hit a button and go into cruise when you do not want to. You could be startled and even lose control. Keep the cruise control switch off until you want to use cruise control.

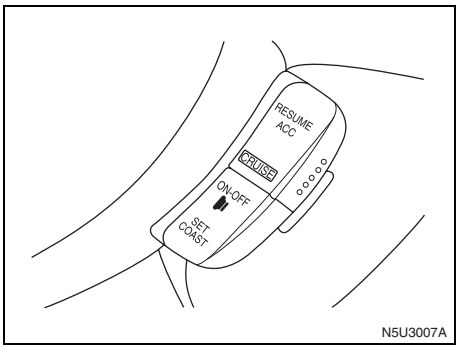

The cruise control pad is located on the right side of the steering wheel.

1) Press the ON/OFF button to turn cruise control on.
2) Accelerate to the speed you want.
3) Press the SET button and release it. An indicator light on the instrument panel cluster will come on to show you that the cruise control is on. See “Cruise Control Light” in this section.
4) Take your foot off the accelerator pedal.

Resuming a Set Speed

Suppose you set your cruise control at a desired speed and then you apply the brake pedal, or depress the clutch pedal if you have a manual transmission. This, of course, shuts off the cruise control. But you do not need to reset it. Once you are going about 24 mph (39 km/h) or more, you can tap the RESUME button.

You will go right back up to your chosen speed and stay there.

If you hold in the RESUME button longer, the vehicle will keep going faster until you release the button or apply the brake pedal. So unless you want to go faster, do not hold in the RESUME button.

Increasing Speed While Using Cruise Control

There are two ways to go to a higher speed:

- Use the accelerator pedal to get to a higher speed. Press the SET button, then release the button and the accelerator pedal. You will now cruise at the higher speed.
- Press the RESUME button. Hold it there until you get up to the speed you want, and then release the button. To increase your speed in very small amounts, tap the RESUME button and then release it. Each time you do this, your vehicle will go about 1 mph (1.6 km/h) faster. The accelerate feature will only work after you turn on the cruise control by pressing the SET button.

Reducing Speed While Using Cruise Control

There are two ways to reduce your speed while using cruise control:

- Press the SET button until you reach the lower speed you want, then release it.
- To slow down in very small amounts, tap the SET button. Each time you do this, you will go about 1 mph (1.6 km/h) slower.

Passing Another Vehicle While Using Cruise Control

Use the accelerator pedal to increase your speed. When you take your foot off the pedal, your vehicle will slow down to the cruise control speed you set earlier.

Using Cruise Control on Hills

How well your cruise control will work on hills depends upon your speed, load and the steepness of the hills. When going up steep hills, you may have to step on the accelerator pedal to maintain your speed. When going downhill, you may have to brake or shift to a lower gear to keep your speed down. Of course, applying the brake pedal takes you out of cruise control. Many

Downloaded from www.Manualslib.com manuals search engine

drivers find this to be too much trouble and do not use cruise control on steep hills.

Disengaging Cruise Control
There are two ways to turn off the cruise control:

- Step lightly on the brake pedal, or depress the clutch pedal, if you have a manual transmission.
- Press the ON/OFF button on the cruise control pad.

Erasing Speed Memory
When you turn off the cruise control or the ignition, your cruise control set speed memory is erased.

Exterior Lamps

The lever on the left side of the steering column operates the exterior lamps.

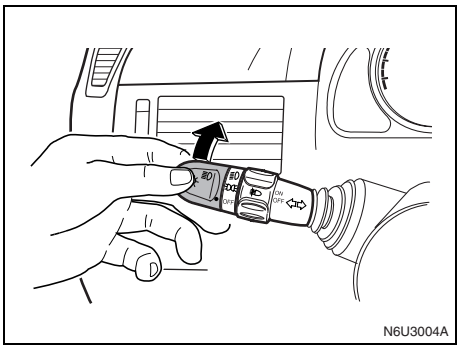

The exterior lamp band has three positions:

(Headlamps):
Turn the band to this position to turn on the headlamps, together with the following:

- Tail Lamps
- License Plate Lamp
- Instrument Panel Lights

The headlamps will turn off automatically when the ignition switch is turned to LOCK or ACC.

(Parking Lamps):
Turn the band to this position to turn on the parking lamps, together with the previously listed lamps and lights.

OFF (Off):
Turn the band to this position to turn all lamps off except the Daytime Running Lamps (DRL).

Lamps On Reminder
You will hear a warning chime when the exterior lamp band is in the or position and driver's door is open.

Daytime Running Lamps (DRL)
Daytime Running Lamps (DRL) can make it easier for others to see the front of your vehicle during the day. DRL can be helpful in many different driving conditions, but they can be especially helpful in the short periods after dawn and before sunset.

The DRL system will make your low-beam headlamps come on in daylight when the following conditions are met:

- The ignition is on, and
- the exterior lamp band is in OFF or in the parking lamp position, and
- the parking brake is released.

When the DRL system is on, the taillamps, sidemarker lamps, parking lamps and instrument panel lights will not be illuminated unless you have turned the exterior lamps control to the parking lamp position.

An indicator light on the secondary information center will come on when the DRL system is on. See "Daytime Running Lamps Indicator Light" in this section.

Downloaded from www.Manualslib.com manuals search engine

INSTRUMENT PANEL

The DRL system will turn off under the following conditions:

- The ignition is off, or
- the parking brakes are on, or
- the high-beam headlamps are on, or
- the low-beam headlamps are on, or
- flash-to-pass is used.

As with any vehicle, you should turn on the regular headlamp system when you need it.

Fog Lamps
If your vehicle has this feature, use your fog lamps for better visibility in foggy or misty conditions.

The control for your front fog lamps is located on the middle of the turn signal/ multifunction lever. To turn on front fog lamps, turn the fog lamp band to ON. To turn off the front fog lamps, turn the fog lamp band to OFF.

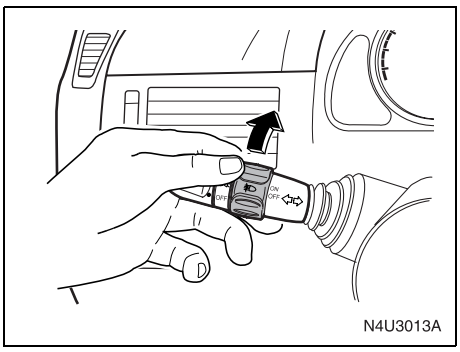

N4U3013A

An indicator light on the secondary information center will come on when the fog lamps are on. See “Fog Lamp Light” in this section.

When using fog lamps, the ignition must be on as well as the parking lamps or low-beam headlamps.

The fog lamps will turn off whenever the high-beam headlamps are turned on. When the high beams are turned off, the fog lamps will come on again.

Interior Lamps

Instrument Panel Brightness
This feature controls the brightness of the instrument panel lights.

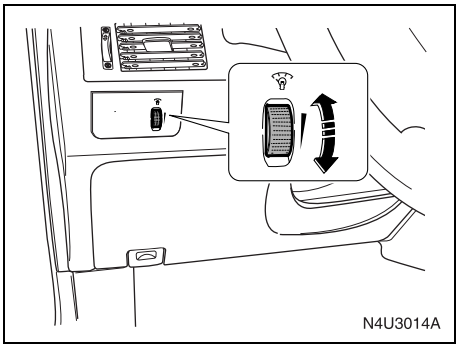
N4U3014A

The thumbwheel for this feature is located on the instrument panel to the left of the steering wheel.

Turn the thumbwheel up to brighten the instrument panel lights or down to dim them.

Downloaded from www.Manualslib.com manuals search engine

Instrument Panel Overview:

Dome Lamp

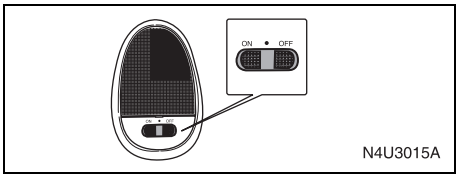

The switch on this lamp has three positions.

ON:
The light comes on and stays on regardless of whether a door is open or closed.

• (Door):
The light comes on when a door is opened. After all doors are closed, the light stays on for about 7 seconds, and then fades out.

OFF:
The light remains off even when a door is opened.

Map Lamps

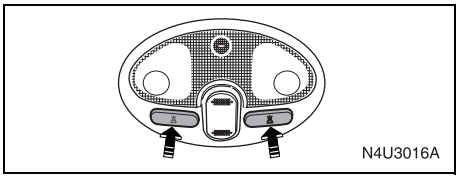

Your vehicle has map lamps. To turn a lamp on, press the button next to it. Press the button again to turn it off.

Accessory Power Outlet

With the accessory power outlet you can plug in auxiliary electrical equipment such as a cellular phone or CB radio.

The accessory power outlet is located on the front side of the center console below the front ashtray.

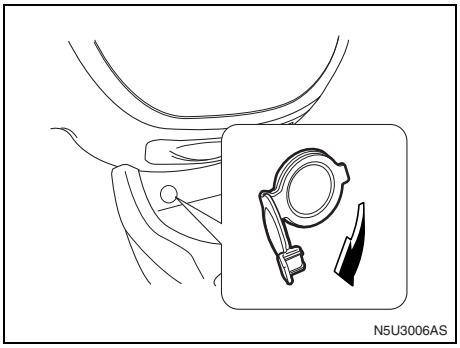

To use the outlet, remove the cover. When not in use, always cover the outlet with the protective cap. The accessory power outlet is operational when the ignition is in the ACC or ON positions.

CAUTION

When using the accessory power outlet, the maximum electrical load must not exceed 12V-10A. Be sure to turn off any electrical equipment when not in use. Leaving electrical equipment on for extended periods can drain the battery.

Certain electrical accessories may not be compatible with the accessory power outlet and could result in blown vehicle or adapter fuses. If you experience a problem, see your dealer for additional information on the accessory power outlet.

CAUTION

Adding some electrical equipment to your vehicle can damage it or keep other things from working as they should. This wouldn't be covered by your warranty. Check with your dealer before adding electrical equipment, and never use anything that exceeds the amperage rating.

When adding electrical equipment, be sure to follow the proper installation instructions included with the equipment.

Downloaded from www.Manualslib.com manuals search engine

INSTRUMENT PANEL

CAUTION

Power outlets are designed for accessory plugs only. Do not hang any type of accessory or accessory bracket from the plug. Improper use of the power outlet can cause damage not covered by your warranty.

Ashtrays and Cigarette Lighter

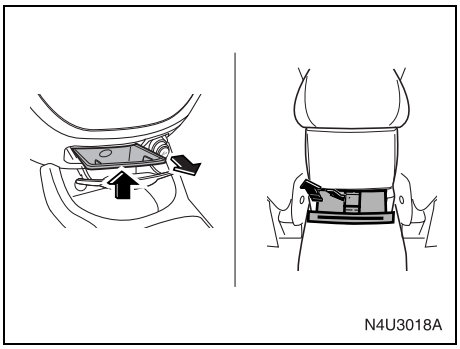

The front ashtray is located at the lower part of the center of the instrument panel. To remove the front ashtray for cleaning, open the ashtray fully, lift the inner case up and then pull it out.

The rear ashtray is located at the bottom of the rear center console. Pull the ashtray toward the rear of the vehicle to open it. To remove the rear ashtray, press in the retaining spring and pull the bin out.

⚠ WARNING

Don't put papers or other flammable items into your ashtrays. Hot cigarettes or other smoking materials could ignite them, causing a damaging fire.

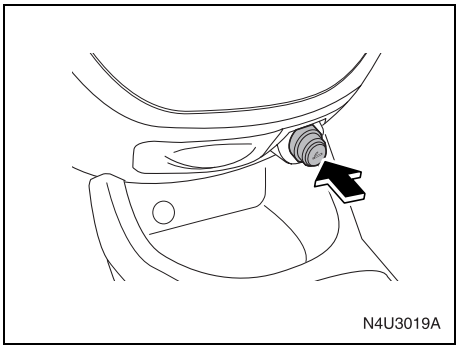

The cigarette lighter is located to the right of the front ashtray.

To use it, turn the ignition to ACC or ON, push the cigarette lighter in all the way and let go. When it's ready, it will pop back out by itself.

CAUTION

Don't hold a cigarette lighter in with your hand while it is heating. If you do, it won't be able to back away from the heating element when it's ready. That can make it overheat, damaging the lighter and the heating element.

Downloaded from www.Manualslib.com manuals search engine

Clock

The time is displayed in the digital clock when the ignition is on. The clock is located in the center of the instrument panel. There are three adjusting buttons for the digital clock:

N4U3020A

H (Hour):
To go forward one hour, press the “H” button once, with the ignition on. To go forward more than one hour, press and hold the button until the correct hour is reached.

M (Minute):
To go forward one minute, press the “M” button once, with the ignition on. To go forward more than one minute, press and hold the button until the correct minute is reached.

S (Set):
To reset the time to the nearest hour, press the “S” button.

For example, if this button is pressed while the time is between 8:00 and 8:29, the display is set to 8:00. If this button is pressed while the time is between 8:30 and 8:59, the display is set to 9:00.

After disconnecting the battery or after replacing the fuse, reset the clock.

Climate Controls

Climate Control System

With this system you can control the heating, cooling and ventilation for your vehicle.

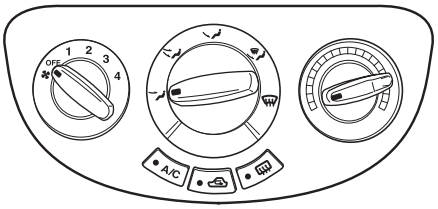

N4U3021A

Fan Control
You can control the rate of airflow coming from the system by turning the fan control knob.

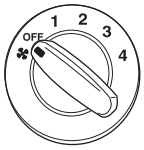

N4U3022A

Turn this knob clockwise or counterclockwise to increase or decrease the fan speed. In any setting other than off, the fan

Downloaded from www.Manualslib.com manuals search engine

INSTRUMENT PANEL

will run continuously with the ignition on. The fan must be turned on to run the air conditioning compressor.

Temperature Control
You can control the temperature of the air that comes through the air vents by turning the temperature control knob.

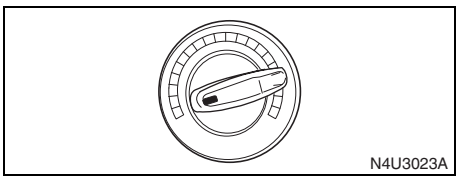

Turn this knob clockwise or counterclockwise to manually increase or decrease the temperature inside your vehicle. Turn the knob to the blue area to get cool air and to the red area to get warm air.

Air Distribution

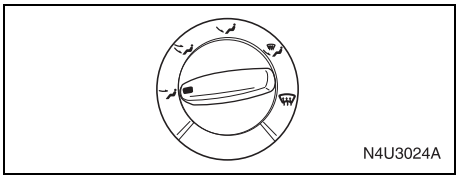

To change the current mode, select one of the following from the air distribution mode knob.

(Front):
This mode directs air to the instrument panel outlets.

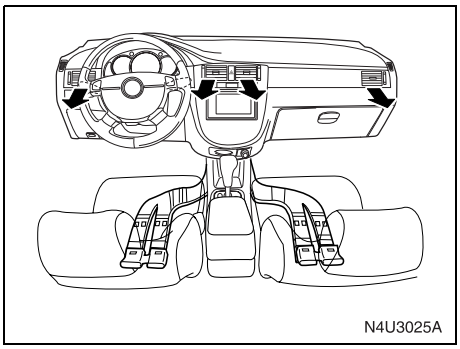

(Bi-Level):
This mode directs approximately half of the air to the instrument panel outlets, and then directs the remaining air to the floor outlets.

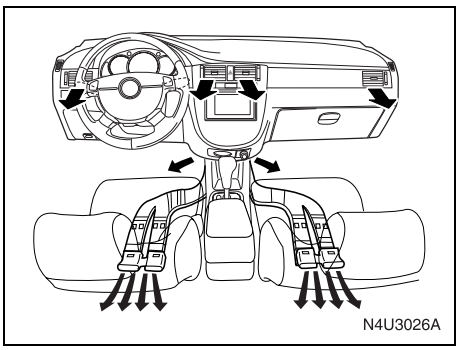

Downloaded from www.Manualslib.com manuals search engine

Climate Controls:

(Floor):
This mode directs most of the air to the floor outlets. Some of the air will also be directed to the windshield, instrument panel side outlets, and rear outlets. Be sure to keep the area under the front seats clear to allow the flow of air to the rear compartment.

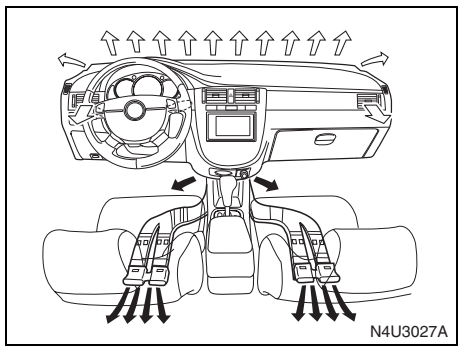

Recirculation

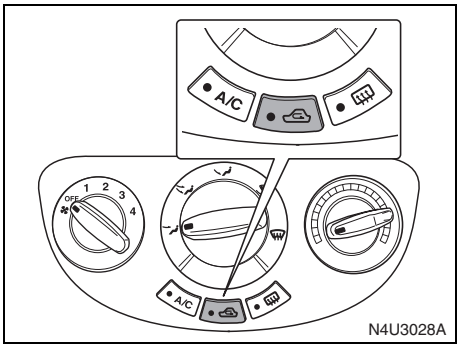

Press this button when driving in dusty conditions or to avoid traffic or outside fumes, and when quick cooling or heating of the passenger area is required. The indicator light will illuminate and interior air will be recirculated.

Pressing the recirculation mode button again will draw outside air into the passenger compartment. The indicator will go out.

Your windows may fog if you use the recirculation mode for extended periods. If this happens, select the defrost mode.

Air Conditioning

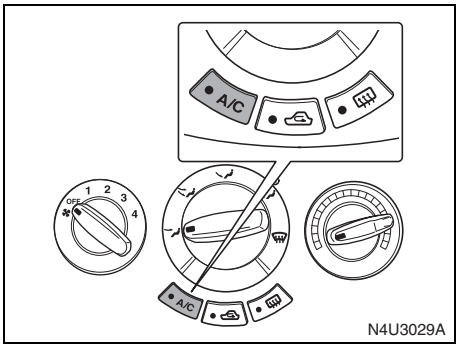

If your vehicle has air conditioning, follow these steps to use the system. Start the engine and set the fan control knob to the desired speed. The air conditioning compressor does not operate when the fan control knob is in the off position. Press the air conditioning button to turn the air conditioning system on. When this button is pressed, the indicator light on the button will come on to let you know the air conditioning is activated.

To turn off the air conditioning, press the button again. The indicator button will then turn off to let you know that the air conditioning is deactivated.

On hot days, open the windows to let hot inside air escape; then close them. This helps to reduce the time it takes for your

Downloaded from www.Manualslib.com manuals search engine

vehicle to cool down. It also helps the system to operate more efficiently.

For quick cool down on hot days, do the following:

1) Press the recirculation button.
2) Press the A/C button.
3) Select the coolest temperature on the temperature control knob.
4) Select the highest fan speed on the fan control knob.

Using these settings together for long periods of time may cause the air inside of your vehicle to become too dry. To prevent this from happening, after the air in your vehicle has cooled, turn off the recirculation mode by pressing the button again.

The air-conditioning system removes moisture from the air, so you may sometimes notice a small amount of water dripping underneath your vehicle while idling or after turning off the engine. This is normal.

Defogging and Defrosting

Fog on the inside of windows is a result of high humidity (moisture) condensing on the cool window glass. This can be minimized if the climate control system is used properly. There are two modes to clear fog or frost from your windshield and side windows. Use the defog mode to clear the windows of fog or moisture and warm the passengers. Use the defrost mode to remove fog or frost from the windshield more quickly. For best results, clear all snow and ice from the windshield before defrosting. Turn the air distribution knob to select the defog or defrost mode.

(Defog):

This mode directs air to the windshield, side window outlets and floor outlets. When you select this mode, the system runs the air-conditioning compressor. To defog the windows faster, turn the temperature control knob clockwise to the warmest setting.

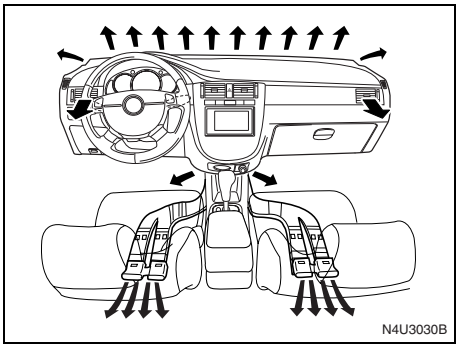

Downloaded from www.Manualslib.com manuals search engine

Climate Controls:

(Defrost):
This mode directs most of the air to the windshield, with some air directed to the side window outlets. When you select this mode, the system runs the air-conditioning compressor. To defrost the windows faster, turn the temperature control knob clockwise to the warmest setting.

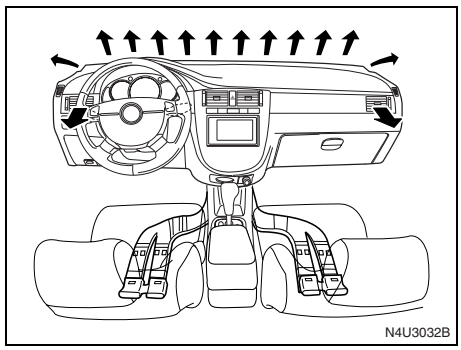

Rear Window and Outside Rearview Mirror Defogger

Your vehicle may have a rear window and outside mirror defogger.

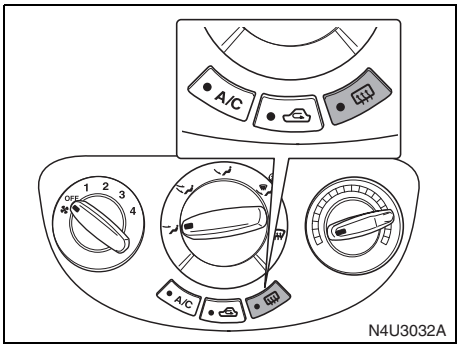

The rear window defogger uses a warming grid to remove fog or frost from the rear window. This feature will only work when the ignition is in ON.

(Rear):
Press the button to turn the rear window and outside mirror defogger on or off. The defogger will turn off approximately 10 minutes after the button is pressed. Be sure to clear as much snow from the rear window as possible. An indicator light on the button will come on to let you know that the feature is activated.

CAUTION

Don't use anything sharp on the inside of the rear window. If you do, you could cut or damage the warming grid, and the repairs would not be covered by your warranty. Do not attach a temporary vehicle license, tape, a decal or anything similar to the defogger grid.

Downloaded from www.Manualslib.com manuals search engine

INSTRUMENT PANEL

Outlet Adjustment

N4U3033BS

Use the lever located in the center of each outlet to change the direction of the airflow. Use the thumbwheel located next to the outlets to turn them on and off.

Operation Tips

- Clear away any ice, snow or leaves from the air inlets at the base of the vehicle that may block the flow of air into your vehicle.
- Use of non-SUZUKI approved hood deflectors may adversely affect the performance of the system.
- Keep the path under the front seats clear of objects to help circulate the air inside of your vehicle more effectively.

Passenger Compartment Air Filter

Your vehicle may be equipped with a passenger compartment air filter. It is located on the passenger side under the glove box.

The filter traps most of the pollen from air entering the module. Like your engine's air cleaner/filter, it may need to be changed periodically.

To change the passenger compartment air filter, use the following steps:

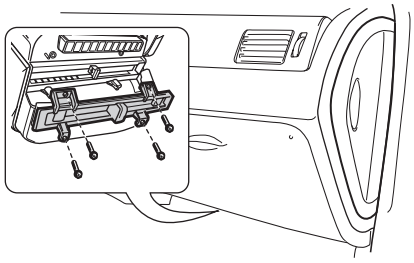
N4U3034A

1) Remove the four screws from the filter cover located below the glove box.
2) Remove the filter cover.

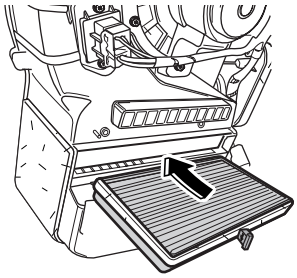
N4U3035A

3) Remove the old passenger compartment air filter.
4) Then reverse the steps to install the new air filter.
   Ensure that the new filter is inserted in the proper orientation.

Downloaded from www.Manualslib.com manuals search engine

Warning Lights, Gauges and Indicators

This section describes the warning lights and gauges that may be on your vehicle. The pictures will help you locate them.

Warning lights and gauges can signal that something is wrong before it becomes serious enough to cause an expensive repair or replacement. Paying attention to your warning lights and gauges could also save you or others from injury.

Warning lights come on when there may be or is a problem with one of your vehicle's functions. As you will see in the details on the next few pages, some warning lights come on briefly when you start the engine just to let you know they're working. If you are familiar with this section, you should not be alarmed when this happens.

Gauges can indicate when there may be or is a problem with one of your vehicle's functions. Often gauges and warning lights work together to let you know when there's a problem with your vehicle.

When one of the warning lights comes on and stays on when you are driving, or when one of the gauges shows there may be a problem, check the gauge that tells you what to do about it. Please follow this manual's advice. Waiting to do repairs can be costly – and even dangerous. So please get to know your warning lights and gauges. They're a big help.

Instrument Panel Cluster

Your instrument panel cluster is designed to let you know at a glance how your vehicle is running. You'll know how fast you're going, how much fuel you're using and many other things you'll need to drive safely and economically.

Your vehicle has this instrument panel cluster, which includes indicator warning lights and gauges that are explained on the following pages.

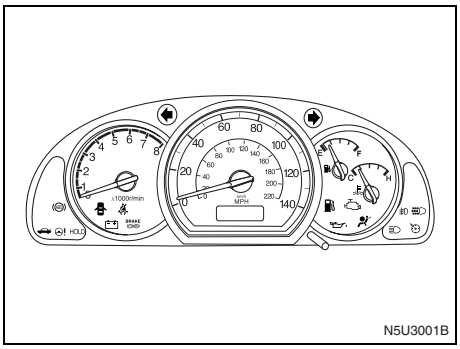

N5U3001B

Speedometer and Odometer

Your speedometer lets you see your speed in both miles per hour (mph) and kilometers per hour (km/h).

Your odometer shows how far your vehicle has been driven, in miles.

CAUTION

Keep track of your odometer reading and check the maintenance schedule regularly for required services. Increased wear or damage to certain parts can result from failure to perform required services at the proper mileage intervals.

Trip Odometer

The trip odometer can record the number of kilometers or miles traveled for up to two trips.

The trip odometer button is located in the lower right area of the speedometer.

N4U3038A

There are two independent trip odometers, which measure the distances your vehicle has traveled since you last reset this function.

You can switch the trip odometer display between Trip A and Trip B by pressing the trip odometer button.

To reset each trip meter to zero, press and hold the trip odometer button until it resets.

Downloaded from www.Manualslib.com manuals search engine

INSTRUMENT PANEL

Tachometer

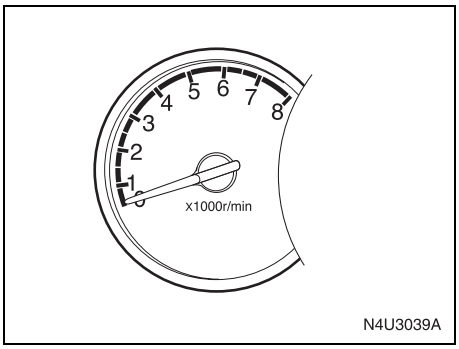

The tachometer shows your engine speed in revolutions per minute (rpm).

CAUTION

Do not operate the engine with the tachometer in the red area, or engine damage may occur. The damage would not be covered by your warranty.

Safety Belt Reminder Light

When the key is turned to ON, a chime will come on for several seconds to remind people to fasten their safety belts, unless the driver's safety belt is already buckled.

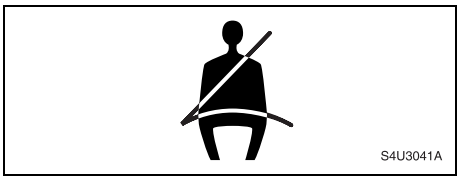

The safety belt light will also come on and stay on until the driver's safety belt is buckled.

If the driver's belt is already buckled, neither the chime nor the light will come on.

Safety Belt Reminder Tone

If your vehicle has this feature, a tone (instead of a chime) will sound for several seconds when the ignition is ON to remind people to fasten their safety belts. The tone will not sound if the driver's safety belt is fastened.

⚠ WARNING

It is absolutely essential that the driver and passengers wear their seat belts at all times. Persons who are not wearing seat belts have a much greater risk of injury if an accident occurs. Make a regular habit of buckling your seat belt before putting the key in the ignition.

Air Bag Readiness Light

There is an air bag readiness light on the instrument panel. The air bag readiness system checks the air bag's electrical system for malfunctions. The light tells you if there is an electrical problem. The system check includes the air bag sensor, the air bag modules, the wiring and the crash sensing and diagnostic module. For more information on the air bag system, see "Air Bag Systems" in section 1.

This light will come on when you start your vehicle, and it will flash for a few seconds. Then the light should go out. This means the system is ready.

Downloaded from www.Manualslib.com manuals search engine

If the air bag readiness light stays on after you start the vehicle or comes on or flashes when you are driving, the air bag system may not work properly. Have your vehicle serviced right away.

⚠ WARNING

If the air bag readiness light stays on after you start your vehicle, it means the air bag system may not be working properly. The air bags in your vehicle may not inflate in a crash, or they could even inflate without a crash. To help avoid injury to yourself or others, have your vehicle serviced right away if the air bag readiness light stays on after you start your vehicle.

The air bag readiness light should be illuminated for a few seconds when you turn the ignition key to ON. If the light doesn't come on then, have it fixed so it will be ready to warn you if there is a problem.

Charging System Light

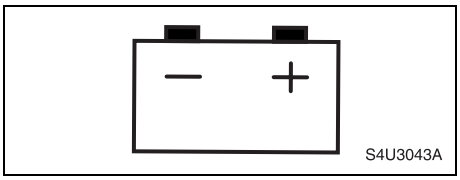

The charging system light will come on when you turn on the ignition, and the engine is not running, as a check to show you it is working.

When the engine is running, the light should go out.

If it stays on, or comes on while you are driving, you may have a problem with the electrical charging system. It could indicate that you have a loose generator drive belt, or another electrical problem. Have it checked right away. Driving while this light is on could drain your battery.

If you must drive a short distance with the light on, be certain to turn off all your accessories, such as the radio and air conditioner.

Brake System Warning Light

Your vehicle's hydraulic brake system is divided into two parts. If one part isn't working, the other part can still work and you will be able to stop the vehicle. For good braking, though, you need both parts working well.

If the warning light comes on, there is a brake problem. Have your brake system inspected right away.

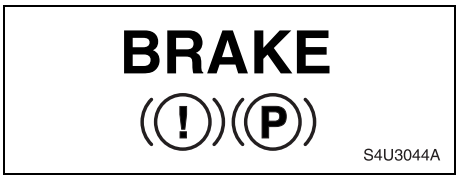

This light should come on briefly when you turn the ignition key to ON. If it doesn't come on then, have it fixed so it will be ready to warn you if there's a problem.

When the ignition is on, the brake system warning light will also come on when you set your parking brake. The light will stay on if your parking brake doesn't release fully. If the lights stays on after your parking brake is fully released, it means you have a brake problem.

Downloaded from www.Manualslib.com manuals search engine

INSTRUMENT PANEL

⚠ WARNING

If any of the following conditions occur, you should immediately ask your SUZUKI dealer to inspect the brake system.

- **If the brake system warning light does not go out after the engine has been started and the parking brake has been fully released.**
- **If the brake system warning light does not come on when the ignition switch is turned to the "ON" position.**
- **If the brake system warning light comes on at any time during vehicle operation.**

If the light comes on while you are driving, pull off the road and stop carefully. You may notice that the pedal is harder to push. Or, the pedal may go closer to the floor. It may take longer to stop. If the light is still on, have the vehicle towed for service. See "Towing Your Vehicle" in section 4.

⚠ WARNING

If the brake system warning light comes on, remember that stopping distance may be longer, you may have to push harder on the pedal, and the pedal may go down farther than normal.

Anti-Lock Brake System Warning Light

S4U3045A

If your vehicle has an anti-lock brake system, the ABS warning light comes on briefly when you turn the ignition ON. This indicates that the system is performing a self-check and the indicator bulb is operating properly. The light should go out after several seconds.

Contact your dealer for repairs if the ABS warning light does any of the following:

- Does not come on when the ignition is turned ON.
- Does not go out after several seconds.
- Comes on while driving.

If the ABS warning light comes on while driving, your vehicle may have an ABS malfunction. Although your vehicle will operate normally without ABS, have your dealer check the system and make any necessary repairs as soon as possible.

Speed Sensitive Power Steering (SSPS) Warning Light

N5U3003A

If your vehicle has Speed Sensitive Power Steering (SSPS), this warning light will come on briefly when you turn the ignition to ON as a check to show you the bulb is working.

Then it should go out after a few seconds.

If the warning light does not come on, have it fixed so it will be able to warn you if there is a problem.

If the warning light stays on, or comes on while you are driving, the SSPS system may not be working. If this happens, see your dealer for service.

Downloaded from www.Manualslib.com manuals search engine

Hold Mode Light

If your vehicle has this feature, this light will come on when the Hold mode is active. If the HOLD mode light flashes, have your vehicle checked.

See “Hold Mode” under “Automatic Transmission Operation” in section 2 for additional information on this feature.

Engine Coolant Temperature Gauge

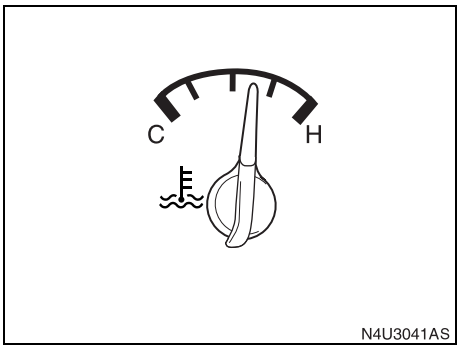

Your vehicle is equipped with an engine coolant temperature gauge. With the ignition in the ON position, this gauge shows the engine coolant temperature.

If the gauge pointer moves into the red area, your engine is too hot! It means that your engine coolant has overheated.

If you have been operating your vehicle under normal driving conditions, you should pull off the road, stop your vehicle and turn off the engine as soon as possible.

See “Engine Overheating” in section 5.

Malfunction Indicator Lamp

Check Engine Light

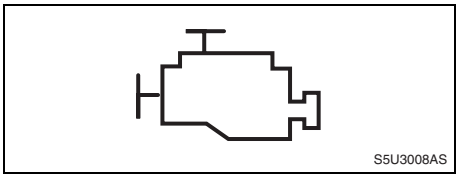

Your vehicle is equipped with a computer which monitors operation of the fuel, ignition and emission control systems.

This system is called OBD II (On-Board Diagnostics-Second Generation) and is intended to assure that emissions are at acceptable levels for the life of the vehicle, helping to produce a cleaner environment. The Check Engine Light comes on to indicate that there is a problem and service is required. Malfunctions often will be indicated by the system before any problem is apparent. This may prevent more serious damage to your vehicle. This system is also designed to assist your service technician in correctly diagnosing any malfunction.

Downloaded from www.Manualslib.com manuals search engine

INSTRUMENT PANEL

CAUTION

If you keep driving your vehicle with this light on, your emission controls may not work as well, your fuel economy may not be as good, and your engine may not run as smoothly. This could lead to costly repairs that may not be covered by your warranty.

CAUTION

Modifications made to the engine, transmission, exhaust or intake or fuel system of your vehicle can affect your vehicle's emission controls and may cause this light to come on. Modifications to these systems could lead to costly repairs not covered by your warranty. This may also result in a failure to pass a required Emission Inspection/Maintenance test.

When the ignition is on, this light should come on and should go out after a few seconds as a check to show you it is working. If the light doesn't come on, have it repaired.

This light will also come on during a malfunction in one of two ways:

- **Light Flashing**
  A misfire condition has been detected. A misfire increases vehicle emissions and may damage the emission control system on your vehicle. Diagnosis and service may be required.
- **Light On Steady**
  An emission control system malfunction has been detected on your vehicle. Diagnosis and service may be required.

If the Light Is Flashing
The following may prevent more serious damage to your vehicle:

- Reducing vehicle speed.
- Avoiding hard accelerations.
- Avoiding steep uphill grades.

If the light stops flashing and remains on steady, see "If the Light Is On Steady" following.

If the light continues to flash, when it is safe to do so, stop the vehicle. Find a safe place to park your vehicle. Turn the key off, wait at least 10 seconds and restart the engine. If the light remains on steady, see "If the Light Is On Steady" following. If the light is still flashing, see your dealer for service as soon as possible. Follow the driving guidelines described above.

If the Light Is On Steady
You also may be able to correct the emission system malfunction by considering the following:

Did you recently put fuel into your vehicle?

If so, reinstall the fuel cap, making sure to fully install the cap. See "Filling Your Tank" in section 5. The diagnostic system can determine if the fuel cap has been left off or is improperly installed. A loose or missing fuel cap will allow fuel to evaporate into the atmosphere. A few driving trips with the cap properly installed should turn the light off.

Did you just drive through a deep puddle of water?

If so, your electrical system may be wet. The condition will usually be corrected when the electrical system dries out. A few driving trips should turn the light off.

Have you recently changed brands of fuel?

If so, be sure to fuel your vehicle with quality fuel. See "Gasoline Octane" in section 5. Poor fuel quality will cause your engine not to run as efficiently as designed. You may notice stalling after start-up, stalling when you put the vehicle into gear, misfiring, hesitation on acceleration or stumbling on acceleration. (These conditions may go away once the engine is warmed up.) This will be detected by the system and cause the light to turn on.

Downloaded from www.Manualslib.com manuals search engine

If you experience one or more of these conditions, change the fuel brand you use. It will require at least one full tank of the proper fuel to turn the light off.

If none of the above steps have made the light turn off, your dealer can check the vehicle. Your dealer has the proper test equipment and diagnostic tools to fix any mechanical or electrical problems that may have developed.

Emissions Inspection and Maintenance Programs

Some state/provincial and local governments have or may begin programs to inspect the emission control equipment on your vehicle. Failure to pass this inspection could prevent you from getting a vehicle registration.

Here are some things you need to know to help your vehicle pass an inspection:

Your vehicle will not pass this inspection if the Check Engine light is on or is not working properly.

Your vehicle will not pass this inspection if the OBD (on-board diagnostic) system determines that critical emission control systems have not been completely diagnosed by the system. The vehicle would be considered not ready for inspection. This can happen if you have recently replaced your battery or if your battery has run down. The diagnostic system is designed to evaluate critical emission control systems during normal driving. This may take several days of routine driving. If you have done this and your vehicle still does not pass the inspection for lack of OBD system readiness, your dealer can prepare the vehicle for inspection.

Oil Pressure Light

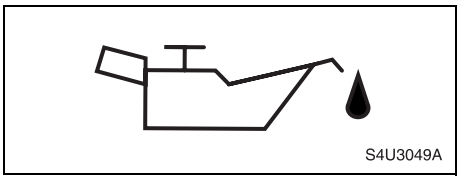

If you have a low engine oil pressure problem, this light will stay on after you start your engine, or come on when you are driving. This indicates that your engine is not receiving enough oil.

The engine could be low on oil, or could have some other oil problem. Have it fixed immediately.

The oil light could also come on in three other situations:

- When the ignition is on but the engine is not running, the light will come on as a check to show you it is working. The light will go out after you start the engine. If it doesn't come on with the ignition on, you may have a problem with the fuse or bulb. Have it fixed right away.
- If you're idling at a stop sign, the light may blink on and then off.
- If you make a hard stop, the light may come on for a moment. This is normal.

⚠ WARNING

Don't keep driving if the oil pressure is low. If you do, your engine can become so hot that it catches fire. You or others could be burned. Check your oil as soon as possible and have your vehicle serviced.

CAUTION

Operating your engine with the low oil pressure light on can result in severe engine damage which is not covered by your warranty.

Downloaded from www.Manualslib.com manuals search engine

INSTRUMENT PANEL

Fog Lamp Light

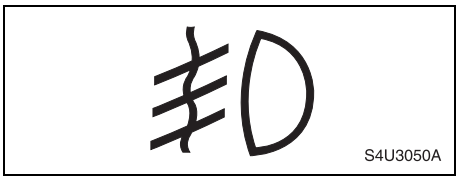

If your vehicle has this feature, the fog lamps indicator light will come on when the fog lamps are in use.

The light will go out when the fog lamps are turned off.

See “Fog Lamps” under Exterior Lamps in this section for more information.

Cruise Control Light

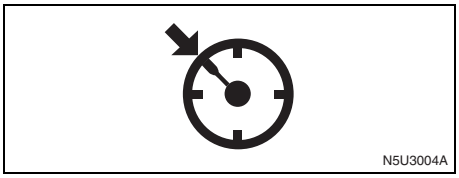

If your vehicle has this feature, this light will come on briefly when the ignition is turned on.

The CRUISE light comes on whenever the cruise control is set. See “Cruise Control” in this section. The light will turn off when the cruise control is turned off.

Highbeam On Light

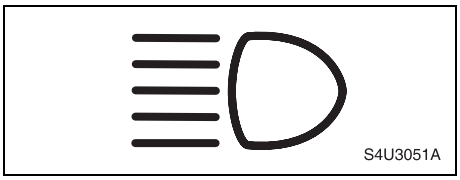

This light comes on whenever the high-beam headlamps are on.

See “Headlamp High/Low-Beam Changer” under “Turn Signal/Multifunction Lever” in this section for additional information.

Fuel Gauge

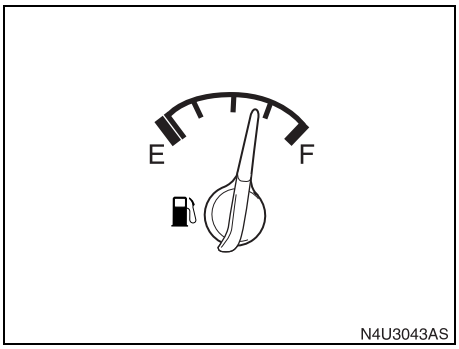

Your fuel gauge tells you approximately how much fuel you have left, when the ignition is on. When the indicator nears empty, the low fuel warning light will come on. You still have a little fuel left, but you should get more soon. See “Low Fuel Warning Light” in this section for more information.

Here are four things that some owners ask about. None of these show a problem with your fuel gauge:

- At the service station, the gas pump shuts off before the gauge reads full.
- It takes a little more or less fuel to fill up than the gauge indicated. For example, the gauge may have indicated the tank was half full, but it actually took a little more or less than half the tank’s capacity to fill the tank.

Downloaded from www.Manualslib.com manuals search engine

- The indicator moves a little when you turn a corner or speed up.
- The gauge goes back to empty when you turn off the ignition.

For your fuel tank capacity, see “Capacities and Specifications” in section 5.

Low Fuel Warning Light

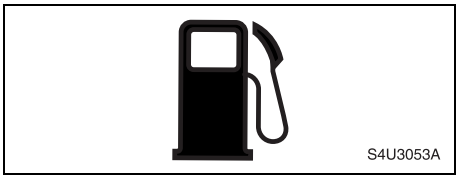

This light will come on when the fuel tank is low on fuel.

To turn it off, add fuel to the fuel tank. See “Filling Your Tank” in section 5.

Door Ajar Light

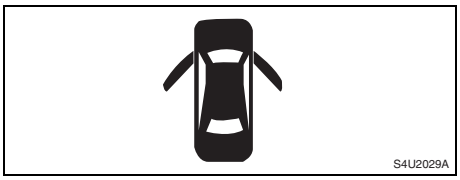

This light will stay on until all doors are closed and completely latched.

If the key is in the ignition while the driver’s door is open, you will also hear a warning chime.

Make sure that all doors are completely closed and this light is out before driving.

Daytime Running Lamps Indicator Light

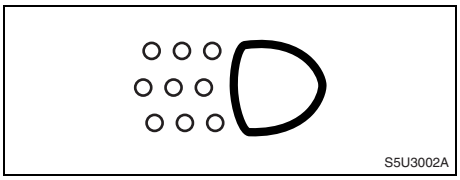

This light will come on when the Daytime Running Lamps (DRL) are on.

See “Daytime Running Lamps (DRL)” under “Exterior Lamps” in this section for further information on the DRL system.

Passenger Air Bag Off Indicator

The passenger air bag off indicator appears in the clock display located in the center of the instrument panel.

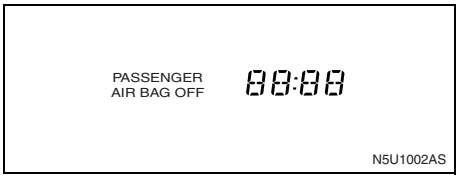

When the ignition key is turned to ON or START, the passenger air bag off indicator will light for several seconds as a system check. Then, after several more seconds, if the words “PASSENGER AIR BAG OFF” remain lit, it means that the passenger sensing system has turned off the right front passenger’s frontal air bag and side air bag. See “Passenger Sensing System” in Section 1 for more on this, including important safety information.

Downloaded from www.Manualslib.com manuals search engine

⚠ WARNING

If the air bag readiness light in the instrument panel cluster ever comes on and stays on, it means that something may be wrong with the air bag system. If this ever happens, have the vehicle serviced promptly, because an adult-size person sitting in the right front passenger's seat may not have the protection of the frontal air bag and side air bag. See "Air Bag Readiness Light" in this section.

Audio System

Precautions

- When the inside of the car is very cold and the player is used soon after switching on the heater, moisture may form on the disc or the optical parts of the player and proper playback may not be possible. If moisture forms on the disc, wipe it off with a soft cloth. If moisture forms on the optical parts of the player, do not use the player for about one hour, this will allow the condensation to disappear normally.
- Driving on extremely bumpy roads which cause severe vibrations may cause sound to skip.
- This unit uses a precision mechanism. Even in the event that trouble arises, never open the case, disassemble the unit, or lubricate the rotating parts. Please bring the unit to an authorized SUZUKI dealer.

Cautions on Handling

52D274

This unit has been designed specifically for playback of compact discs bearing the mark (A).
No other discs can be played.

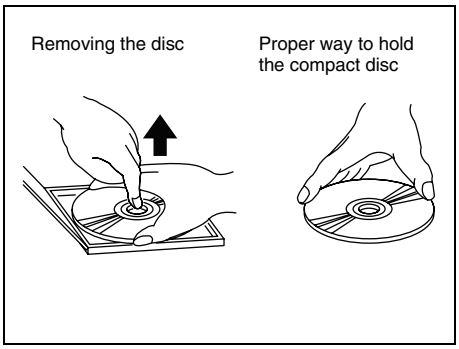

52D275

To remove a compact disc from its storage case, press down on the center of the case and lift the disc out, holding it carefully by the edges.

Always handle the compact disc by the edges.

Downloaded from www.Manualslib.com manuals search engine

Audio System:

Never touch the surface.

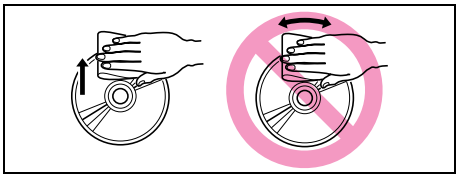

52D276

To remove fingermarks and dust, use a soft cloth, and wipe in a straight line from the center of the compact disc to the circumference.

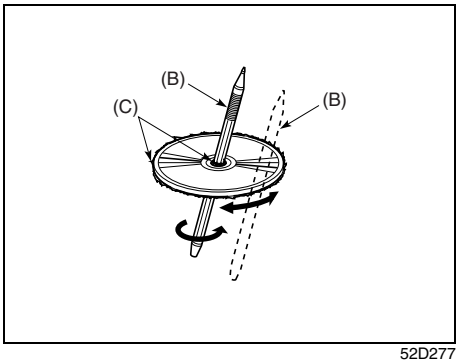

52D277

New discs may have some roughness around the edges. The unit may not work or the sound may skip if such discs are used. Use a ball-point pen (B), etc. to remove the roughness (C) from edges of the disc before insertion inside the unit.

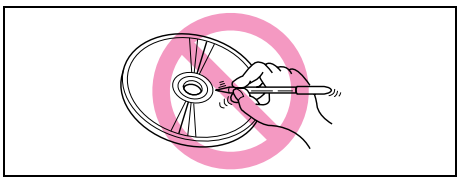

52D278

Never stick labels on the surface of the compact disc or mark the surface with a pencil or pen.

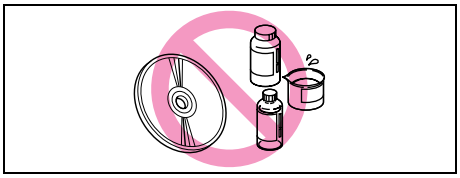

52D279

Do not use any solvents such as commercially available cleaners, anti-static spray, or thinner to clean compact discs.

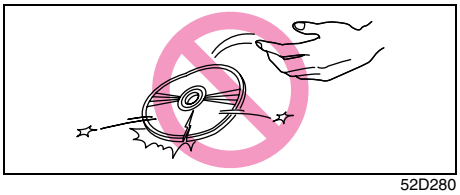

52D280

Do not use compact discs that have large scratches, are misshaped, or cracked, etc. Use of such discs will cause damage or prevent the system from operating properly.

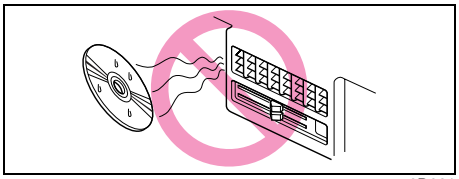

52D281

Do not expose compact discs to direct sunlight or any heat source.

NOTE:

- *Do not use commercially available CD protection sheets or discs equipped with stabilizers, etc.*
  These may get caught in the internal mechanism and damage the disc.
- *CD-R discs may not be able to playback in this unit due to the recording conditions.*
- *CD-RW discs can not playback in this unit.*

Downloaded from www.Manualslib.com manuals search engine

INSTRUMENT PANEL

Radio, Cassette and CD (ACK-1646)

- Ergonomic design
- High-power output (35W x 4ch)
- Automatic full logic deck mechanism
- 30-station preset tuning FM-18, AM-12
- Repeat function
- Intro/random function
- Pause function
- Auto music search (AMS) function
- Dolby® -B noise reduction
- 7 Band, 5 Mode EQ
- Auto-Loud

Front Panel Information

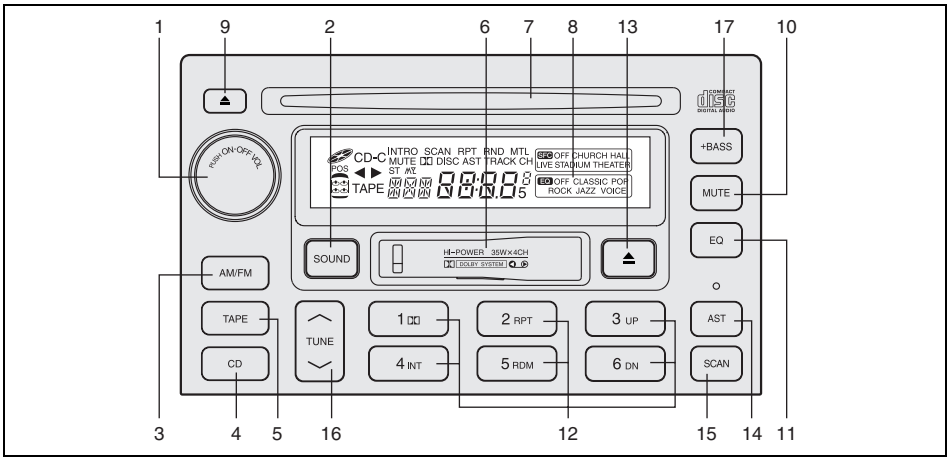

86Z032

1. Power / Volume Control button
2. Sound Mode Selector button
3. Radio-on & Band (FM/AM) button
4. CD-On button
5. Cassette-on & Program button
6. Tape Slot
7. CD Slot
8. Vacuum Fluorescent Display (VFD)
9. CD Eject button
10. Mute button
11. EQ (Classic, Pop, Rock, Jazz, Voice)
12. Preset Station buttons (No. 1–6)
    - Dolby®-B noise Reduction (preset #1)
    - RPT (Repeat button) (preset #2) Repeat Playback (of one song) on Tape or CD
    - INT (Introduction button) (preset #4) Brief introduction (of all songs) on CD
    - RDM (Random button) (preset #5) Play tracks on the disc in random order
13. Tape Eject button
14. Auto Memory button
15. Scan button
16. Tuning Up/Down or Fast Forward/ Rewind button
17. Super Bass button

Downloaded from www.Manualslib.com manuals search engine

RADIO FREQUENCY INTERFERENCE
Radio reception is affected by station signal strength, distance from a radio transmitter, buildings, bridges, mountains and other external influences. Intermittent changes in reception quality are normally caused by these external influences.

CAUTION

Audio systems can be damaged when the vehicle is started using external jumper leads or a booster battery.
Turn the audio system off.

Dolby noise reduction system manufactured under license from Dolby Laboratories Licensing Corporation.
"Dolby" and the double symbol are trademarks of Dolby laboratories Licensing Corporation.

NOTE:
SONY CSA-9 adapter is necessary for 8cm disc.

Rear Panel Information

18PIN I/O SPEAKER CONNECTOR

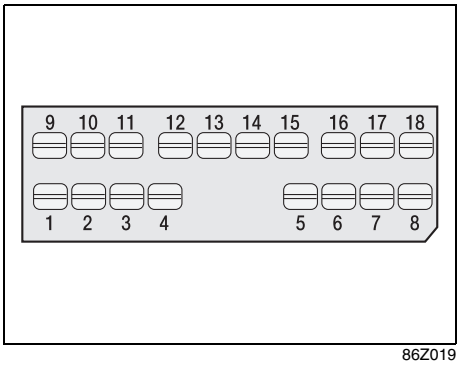

86Z019

1. FRONT R-CH SP(+)
2. REAR R-CH SP(+)
3. ILLUMINATION (+)
4. ACC
5. BACK-UP (B+)
6. TELEPHONE MUTE
7. REAR L-CH SP (+)
8. FRONT L-CH SP (+)
9. FRONT R-CH SP (–)
10. REAR R-CH SP (–)
11. ILLUMINATION (–)
12. AUTO ANT.
13. REMOCON GROUND
14. GROUND
15. REMOCON REAR SIGNAL
16. REMOCON FRONT SIGNAL
17. REAR L-CH SP (–)
18. FRONT L-CH SP (–)

Downloaded from www.Manualslib.com manuals search engine

INSTRUMENT PANEL

Vacuum Fluorescent Display (VFD)

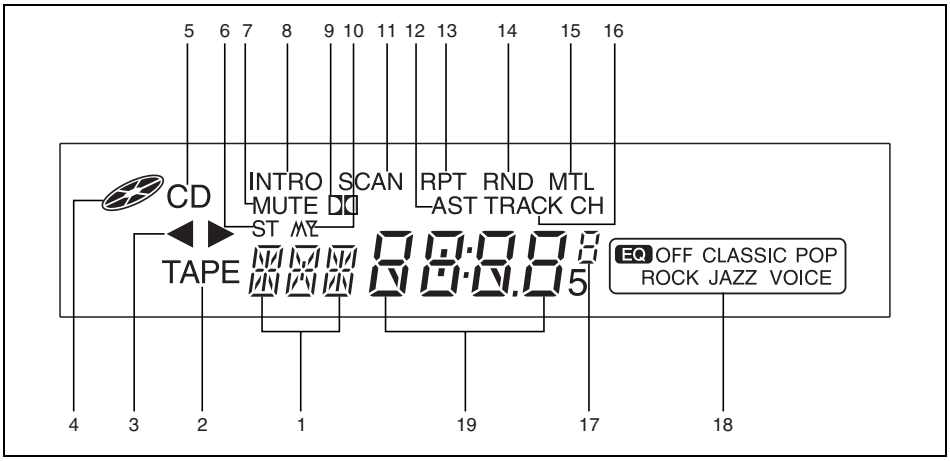

86Z020

1. AM/FM BAND
2. Tape on
3. Tape direction indicator
4. Disc inserted indicator
5. CD-on
6. FM stereo on
7. Sound Mute
8. Introduction function
9. Dolby noise reduction
10. Weak FM station
11. Radio Frequency Scan
12. Auto store
13. Repeat function
14. Random function
15. Metallic tape
16. Track function indicator
17. Preset button number
18. Equalizer function
19. Radio: Station
    Tape: Operating status
    CD: Track number

The VFD shows each function and status while the unit is in operation.

RADIO RECEPTION

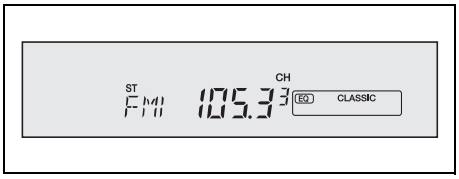

86Z021

CD PLAY

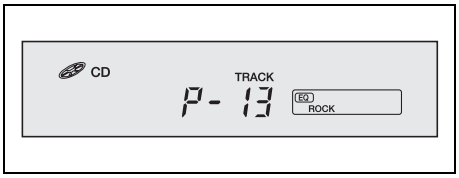

86Z022

TAPE PLAY

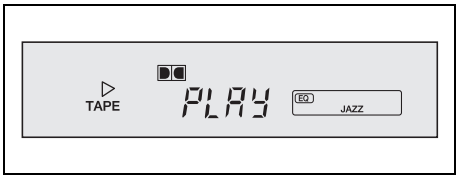

86Z023

Downloaded from www.Manualslib.com manuals search engine

Audio System:

GENERAL OPERATION

1. POWER ON-OFF

- Each time this button is pressed, the unit will be turned on or off.
- The audio system is turned on by pressing the CD, AM/FM, or TAPE button, or by inserting a tape into the loading slot.

NOTE:

- *The audio system can be operated when the ignition key is at "ACC" or "ON" position.*
- *When ejecting a tape, the mode is automatically switched to the radio mode.*
- *When you turn it on, the audio system will operate in the mode that it was operating in before it was turned off.*

2. SOUND MODE SELECTOR

How to Adjust the Sound

Sound Mode Selection:
To select the desired audio mode, press the sound mode selector button. The audio mode indicator and numeric signal will appear on the VFD.

Each time you press this button, the audio mode changes as follows;

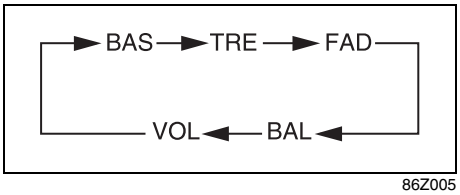

86Z005

After adjusting, the display will be changed to the original condition after 5 seconds.

Volume Control:

- Rotate the power/volume control button clockwise to increase the volume and counterclockwise to decrease the volume. The volume level will appear on the VFD.
- After adjusting, the display will return to the original condition after 5 seconds.

Bass Control:
Bass control is used to adjust the bass (low frequency) sound quality.

- Select the bass control mode using the sound mode selector button.
- When the "BAS" indicator appears on the VFD, rotate the volume control button clockwise to increase the bass (low frequency) and counterclockwise to decrease it.
  The bass level will appear on the VFD.
  The signal "D" indicates the original sound level.
  The highest bass level is "+5" and the lowest is "–5".
- After adjusting, the display will return to the original condition after 5 seconds.
- Even though the audio system is turned off and on, the level you set will not be changed.

Treble Control:
Treble control is used to adjust the Treble (high frequency) sound quality.

- Select the treble control mode using the audio mode selector button.
- When the "TRE" indicator appears on the VFD, rotate the volume control button clockwise to increase the treble (high frequency) and counterclockwise to decrease it.
  The treble level will appear on the VFD.
  The signal "0" indicates the original sound level.
  The highest treble level is "+5" and the lowest is "–5".
- After adjusting, the display will return to the original condition after 5 seconds.

Downloaded from www.Manualslib.com manuals search engine

- Even though the audio system is turned off and on, the level you set will not be changed.

Fader Control:
Fader control is used to adjust the volume of the front and rear speakers.

- Select the fader control mode using the sound mode selector button.
- When the “FAD” indicator appears on the VFD, rotate the volume control button clockwise to decrease the volume of the rear speakers. The fader level signal will change from “F1” up to “F15”.
- To decrease the volume of the front speakers, rotate the volume control button counterclockwise.
  The fader level signal will change from “R1” up to “R15”.
- When the fader level signal “0” appears on the VFD, the volume of front and rear speakers is the same.
- After adjusting, the display will return to the original condition after 5 seconds.
- Even though the audio system is turned off and on, the fader setting will not be changed.

Balance Control:
Balance control is used to adjust the volume of the left and right speakers.

- Select the balance control mode using the sound mode selector button.
- When the “BAL” indicator appears on the VFD, rotate the volume control button clockwise to decrease the volume of the left speakers.
  The balance level signal will change from “R1” up to “R15”.
- To decrease the volume of the right speakers, rotate the volume control button counterclockwise.
  The balance level signal will change from “L1” up to “L15”.
- When the signal “0” appears on the VFD, the volume of the left and right speakers is the same.
- After adjusting, the display will return to the original condition after 5 seconds.
- Even though the audio system is turned off and on, balance setting will not be changed.

RADIO OPERATION

1. BAND SELECTION

- Press the power button or AM/FM button to turn the audio system on.
- Press the “AM/FM” button to select the desired band.

The band changes as follows;

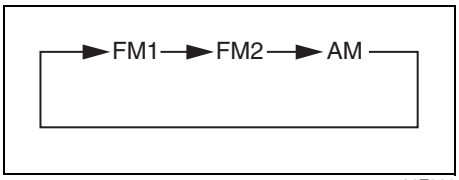

86Z006

- Tune in the desired station using the tuning up/down buttons (for manual or seek tuning), the preset buttons or the preset scan button.
- To turn the radio on while a cassette is playing, eject the tape or press the AM/FM button. The station you receive will be the last station selected.

NOTE:
The audio system can be operated when the ignition key is in the “ACC” or “ON” position.

Downloaded from www.Manualslib.com manuals search engine

2. BROADCAST SELECTION

How to Tune In The Desired Station

Seek Tuning:
To quickly search for the next receivable lower station, press the tuning down button for more than 0.5 seconds.
To quickly search for the next receivable higher station, press the tuning up button for more than 0.5 seconds.

Manual Tuning:
Press the tuning up or down button for less than 0.5 seconds to increase or decrease the frequency. The frequency of the AM band changes 9 kHz (or 5 kHz or 10 kHz) each time you push the button, the frequency of the FM band changes 50 kHz (or 100 kHz or 200 kHz) each time you push the button.

Using Preset Buttons:
To select the desired preset station stored on the preset buttons, press the corresponding preset button for less than 2 seconds.

Preset Scan:
To hear the preset stations stored on the preset buttons, press the preset scan button for less than 2 seconds.
For the FM band (FM1 or FM2), all of the preset stations stored on the preset buttons 1 through 6 in the FM1 and FM2 band will be tuned in for about 5 seconds each in sequence.
For the AM band, all of the preset stations stored on the preset buttons 1 through 6 in the AM band will be tuned in for about 5 seconds each in sequence.
While operating this function, the relevant frequency and preset button number will flash on the VFD.
After scanning all of the preset stations, this function is automatically canceled and the station you heard before operating this function is tuned in.
When the desired station is tuned in, press this button again or the corresponding preset button to stop the scan function.

Scan:
To hear each station on the current wave band, press the scan button for about 5 seconds.
Pressing a second time will cancel the scan function. Scanning will continue until you press the scan button a second time.

How to Preset Stations
6 stations on each band (FM1, FM2, AM) can be stored into the 6 preset buttons.

Auto Store:
- Select the desired band using the AM/FM selector button.
- Press the auto store button for more than 2 seconds.
- Then, the strongest available stations are automatically stored on the preset buttons 1 through 6 in sequence.
- After storing, all of the preset stations are scanned in sequence for 5 seconds each. Then, the station you heard before operating the auto store function is automatically tuned in.
- “AST” band will disappear if you press the AM/FM button.
- If pressed for 2 seconds while traveling to another area, the local stations will be memorized automatically.

Downloaded from www.Manualslib.com manuals search engine

VFD SIGNAL

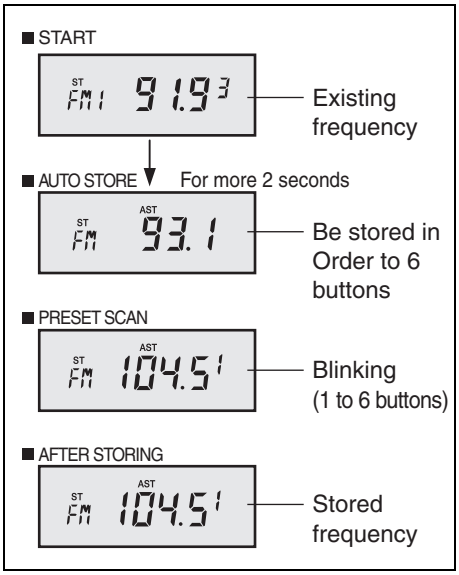

86Z007

Manual Memory:

- Select the desired band using the band selection button.
- Tune in the desired station using the tuning up/down button.
- Press one of the 6 preset buttons for more than 2 seconds.
  The preset button number will be displayed on the VFD, then the station will be stored in the memory.
- Using the same method, you can store the desired stations into the 6 preset buttons.

CASSETTE OPERATION

1) Press the power button or “TAPE” button to turn the audio system on.
2) Insert a cassette tape fully into the cassette slot with the exposed tape side facing to the right.
   Then the player starts playback and the “PLAY” signal appears on the VFD.
3) If a cassette tape is already inserted in the cassette slot, press the cassette on button to turn the cassette on.
4) When playing back a Dolby tape, press the button (Dolby B noise reduction button) to reduce audible “hiss”.
5) To eject a tape, press the tape eject button.
   Then, the radio mode is automatically activated.
6) To play a cassette when the radio or CD player is operating, press the cassette on button (if a tape is already inserted in the cassette slot) or insert a tape into the cassette slot.
   Then the cassette starts playback.

Cassette On / Program Function

To play a cassette when the radio or CD player is operating, press the TAPE button if a tape is already inserted in the cassette slot. The mode is changed to the cassette mode and the tape is played back.
If a tape is not in the cassette slot, the mode is not changed to the cassette mode when you press this button.
To play back the opposite side of a tape press the cassette on/program button.

Downloaded from www.Manualslib.com manuals search engine

Auto Reverse
When the tape reaches at the end of one side, it will automatically reverse and play back the other side of tape.

Fast Forward / Rewind Function

Fast Forward:
To fast forward wind a tape, press the fast forward button for more than 1.5 seconds.
The “FF” indicator appears on the VFD.
When the tape reaches the end, it is automatically reversed and played back from the beginning of the opposite side.
To stop the fast forward movement, press the cassette on/program button.

Rewind:
To rewind a tape, press the rewind button for more than 1.5 seconds.
The “RE” indicator appears on the VFD.
When the tape is fully rewound, it is played back from the beginning of the same side.
To stop the rewind movement, press the cassette on/program button.

AMS (Auto Music Search) Function
The AMS function searches for the beginning of a music track by identifying the blank interval between tracks.
If there is a blank interval within a music track or there is no interval between music tracks, the system may not search correctly.
For the AMS function to work properly, an interval of at least 4 seconds between each music track is required.
To listen to the next track, press the button for less than 1.5 seconds. The “A-FF” indicator appears on the VFD. The tape moves forward and it is played back from the beginning of the next track.
If you press the rewind button for less than 1.5 seconds, the “A-RE” indicator appears on the VFD and the tape rewinds. Then it is played back from the beginning of the current track.
To listen to the previous track, press the rewind button again when the tape stops at the beginning of the current track.
The AMS function is automatically canceled after finishing its function.
To cancel in the middle of AMS operation, press the fast forward or rewind button again.

Metal Tape Auto-Sensing
This unit has metal tape auto-sensing function. If a metal tape is inserted, the “MTL” indicator appears on the VFD.

Dolby B Noise Reduction Function
Press the dolby B noise reduction button when playing back a tape which has been recorded using a dolby noise reduction system.
The dolby symbol will be illuminated on the VFD.
This system improves the signal to noise ratio of the tape section, resulting in reduced audible “hiss” during playback.

Repeat Function
Press the “RPT” button to repeatedly listen to the current track.
The repeat indicator “RPT” will be illuminated in the VFD, and the current track will be played repeatedly until this function is canceled.
To cancel this function, press this button again.
The repeat function requires an interval of about 4 seconds between each music track to work properly.

Downloaded from www.Manualslib.com manuals search engine

CD OPERATION

1) Press the power button to turn the audio system on.
2) Insert a CD into the CD slot with its label side up.
   The player will begin playing the first track.
3) If a CD is already inserted in the CD slot, press the CD button.
   The player will play the last position you listened to.
4) To eject the CD, press the CD eject button.
   If the ejected disc is not taken out of the CD player within 10 seconds, the CD will automatically load again.
   After the CD is ejected, the audio system will change to the last mode used (radio or tape).
   The CD disc can be also ejected when the CD eject button is pressed with the ignition turned off.
5) You can listen to the radio or a tape by pressing the AM/FM or TAPE button while a CD is playing.

CD Player-On Function

To play a CD when the radio or cassette player is operating, and a CD is already inserted in the player, press the CD player-on button. The mode is changed to the CD mode and the CD will play the last track you listened to.
If a CD is not in the CD player, the mode is not changed to the CD mode.

Fast Forward / Rewind Function

To fast forward, press the fast forward button.
To rewind, press the rewind button. When the disc reaches the desired point, release the button and normal playback will resume.

Track Up / Down Function

The track up/down button makes it easy to play back the current track again or skip to the next or previous track.
To play back the next track, press the track up button once.
Each time you press this button, the disc will repeatedly skip to the next track.
To play back the current track again, press the track down button once.
If you press this button again, the disc will skip to the previous track.
To quickly skip tracks, keep the track up or down button pressed and release it when it reaches the desired track.

Random Button (RDM)

To play a CD in random order, press the RDM button. “RDM” will display.
To cancel this function, press this button again.

NOTE:
When operating the random function, tracks will be skipped in random order.

CD & SOUND OPERATION

Introduction Function (INT)

To scan the CD, press the “INT” button.

The “INT” indicator will appear on the VFD and the player will playback the first 10 seconds of every track.
This introduction function will be automatically canceled when scanning returns to the beginning of the track where it started.
When the player reaches the desired track, press this button again.
Then, this function will be canceled and the player will resume normal play.

Repeat Function (RPT)

To repeatedly listen to the current track, press the “RPT” button.
The “RPT” indicator will be illuminated on the VFD and the current track will be played back repeatedly until this function is canceled.
To cancel this function, press this button again.

Random Function (RDM)

To play back the tracks on the CD in random order, press the “RDM” button. The “RDM” indicator will be illuminated on the VFD.
After playing back the current track, the CD will be played back in a random order until this function is canceled.
To cancel this function, press this button again.

Downloaded from www.Manualslib.com manuals search engine

Sound Mute (MUTE)
Pressing this button mutes the volume. When this button is pressed the “MUTE” signal will appear on the VFD. To hear the sound again, rotate the volume button or press the MUTE button again or press the sound buttons.

Equalizer Mode Selector (EQ)
This unit is designed with 7 band and 5 equalizer modes.

How to Use the Equalizer
Each time the EQ button is pressed, the mode is changed as follows.

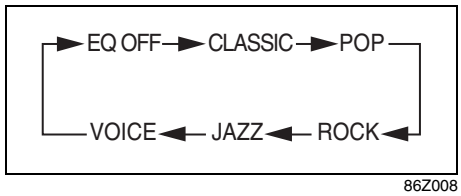

86Z008

- To hear the best sound, press this button and select the proper mode during broadcast reception, or TAPE or CD playback.
- If you try to adjust TREBLE/BASS with the EQ button, the status will be changed to the status of “EQ OFF”, because the functions of EQUALIZER and TREBLE/BASS are not compatible with each other.

AUDIO STEERING WHEEL CONTROLS
If your vehicle has this feature, you can control certain audio functions using the buttons on your steering wheel.

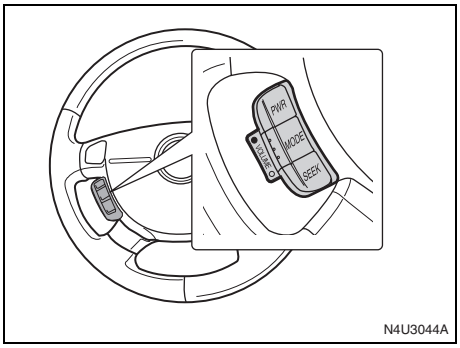

N4U3044A

How to Use Steering Wheel Controls

Power ON-OFF Button (PWR)

Power Operation
Each time this button is pressed, the audio system is turned on or off.

MODE Switch Button
(FM1, FM2, AM, TAPE, CD)
Each time this button is pressed, the mode is changed as follows:

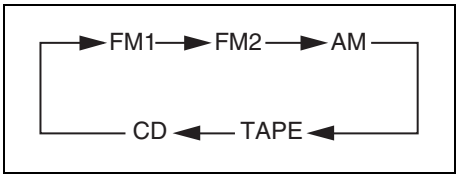

86Z009

The above flow chart shows the operation order when a tape or CD has been inserted.

SEEK Button

Manual Radio Tuning
(less than 0.5 seconds)
When you press this button once for less than 0.5 seconds, the radio frequency will be moved up/down one step.

(AM: 9 KHz, FM: 100 KHz) (Moving up/down frequency appears on the VFD.)

Radio Seek Tuning
(more than 0.5 seconds)
When you press this button for more than 0.5 seconds, the tuner will automatically scan for a higher/lower frequency than the currently selected frequency. (The frequency is changed rapidly until a station is turned in and the frequency is displayed on the VFD.)

Downloaded from www.Manualslib.com manuals search engine

Tape Seek (less than 0.5 seconds)
When this button is pressed for less than 0.5 seconds during tape playback, fast forward is started and the beginning of the next track is played automatically. At this time, if the button is pressed again or if the end of the tape is reached, fast forward is stopped and the tape will play normally.
The run direction and "A-FF" signal appears on the VFD while this function is operating.

Tape Manual Program
(more than 0.5 seconds)
If this button is pressed for more than 0.5 seconds during tape playback, the unit will switch to FF. If this button is pressed again, or the tape reaches it's end, the FF function stops.
The run direction or "FF" signal appear on the VFD while this function is operating.

Volume Control
Each time you press the up button quickly during normal operation, the volume is increased, and the volume level appears digitally on the VFD. Conversely, each time you press the down button, the volume is decreased and the volume level appears on the VFD.

When you hold in the up/down button, the volume increases or decreases continuously.

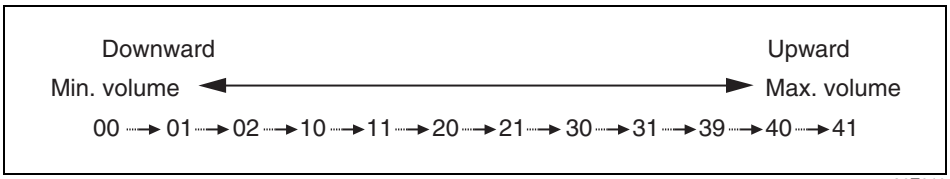

86Z010

"00" indicates minimum volume, and "41" indicates maximum volume.

Each time the control button is pressed, the volume level information on the VFD increases or decreases, and after about 3 seconds, the VFD display returns to normal.

Downloaded from www.Manualslib.com manuals search engine

SPECIFICATION

Power requirement	DC 14.4 NEGATIVE GROUND		
Speaker impedance	4 ~ 8 OHM (4 SPEAKER)		
Rated output power	35 WATTS x 4CH = 140 WATTS		
RADIO SECTION		**CDP SECTION**	
Tuning range (Europe) (Latin America) (North America)	FM: 87.5 ~ 108 MHz AM: 531~ 1602 kHz FM: 87.5 ~ 108 MHz AM: 522 ~ 1620 kHz FM: 87.5 ~ 108 MHz AM: 520 ~ 1620 kHz FM: 87.7 ~ 107.9 MHz AM: 530 ~ 1710 kHz	SYSTEM	COMPACT DISC DIGITAL AUDIO SYSTEM
		DISC	COMPACT DISC (12 cm)
		RPM	1.2 m/S ~ 1.4 m/S (500 rpm ~ 200 rpm)
Usable sensitivity	FM: 4 dBu S/N: 30 dB AM: 20 dBu S/N: 20 dB	Frequency response	20 Hz ~ 20 kHz
S/N Ratio	FM: 60 dB AM: 50 dB	Total harmonic distortion	0.1%
Stereo separation	FM: 35 dB	Dynamic Range	85 dB
TAPE SECTION		S/N Ratio	70 dB
Tape speed	4.75 cm/sec	Channel separation	60 dB
Wow / Flutter	0.18% (WRMS)		
S/N Ratio	65 dB (DOLBY ON)		
Cross talk	40 dB		
Frequency response	63 Hz ~ 15 kHz		

Downloaded from www.Manualslib.com manuals search engine

INSTRUMENT PANEL

Radio and MP3 CD Player (AGC-3146)

Features

- Ergonomic design with multi-dot VFD
- High-power output (45W x 4ch)
- 18-station preset tuning FM-12, AM-6
- Automatic Tuning Function
- CD (MP3) Play/Pause Function
- Repeat/Intro/Random Function
- MP3 folder/track search Function
- MP3 file name scroll display Function

Front Panel

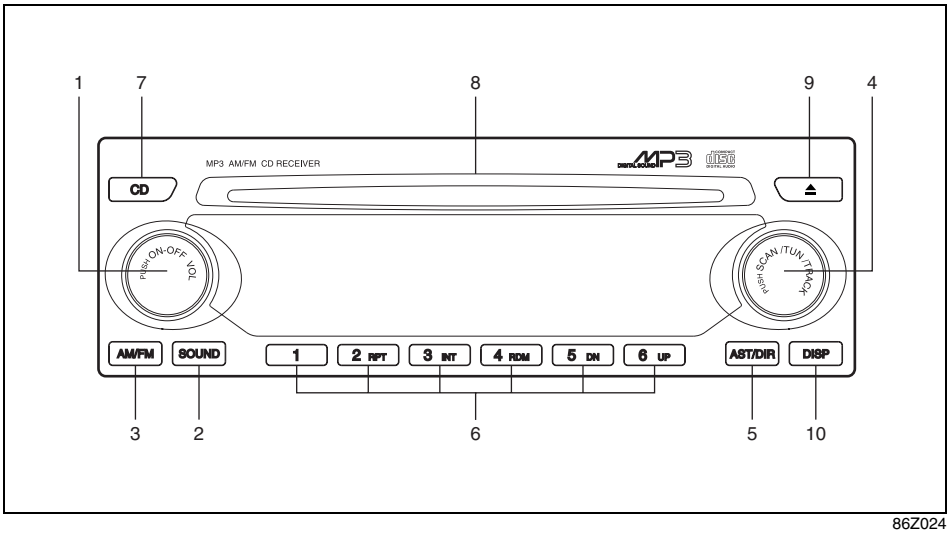

86Z024

Button Description

1. Power on/off & Volume Control button
2. Sound mode Selection button
3. Radio on & Band Selection button
4. Tune up/down & Track Search button
   - Seek tuning
   - Scan tuning
   - Manual tuning
5. Autostore & AST Band Selection button
6. Preset station buttons (1 – 6)
   - Repeat Play button (preset #2)
   - Introduction button (preset #3)
   - Random Play button (preset#4)
7. CD (MP3) Play & Pause button
8. CD (MP3) disc Slot
9. Disc Eject button
10. CD (MP3) Display mode Selection button

Downloaded from www.Manualslib.com manuals search engine

Vacuum Fluorescent Display (VFD)

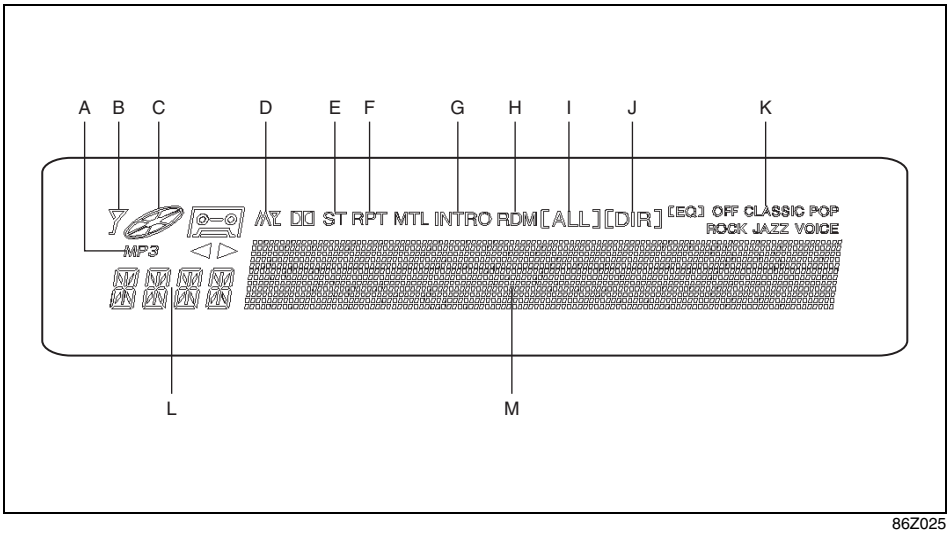

86Z025

A. MP3 disc play indicator
B. Radio mode indicator
C. Disc-inserted indicator
D. Weak FM signal indicator
E. FM stereo on indicator
F. Repeat function indicator
G. Introduction function indicator
H. Random function indicator
I. MP3 play mode indicator
   - All of the disc
J. MP3 play mode indicator
   - Directory of the disc only
K. Equalizer mode indicator
L. Mode indicator (CD/MP3/Radio)
M. Overall contents display

GENERAL OPERATION

Power/Volume Control Knob (1)

Power On:
Press this knob to activate the audio system. The radio, CD or MP3 indicator will appear on the VFD.

Power Off:
Press this knob again to turn the system off. All indicators on the VFD will disappear.

NOTE:
- *When ejecting a disc, the mode is automatically changed to the mode that the audio system was operating in before the disc was inserted.*
- *Audio system can be operated with the ignition key in the "ACC" or "ON" position.*

How to Adjust the Sound

Sound Mode Selection:
To select the desired sound mode, press the sound mode selector button (2). The sound mode indicator and numeric signal will appear on the VFD.

Downloaded from www.Manualslib.com manuals search engine

Each time you press this knob, the sound mode changes as follows;

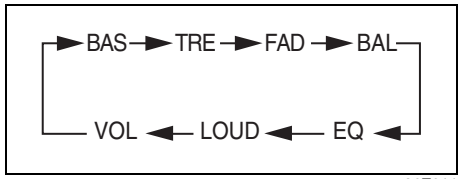

86Z011

Volume Control:
Rotate the power/volume control knob (1) clockwise to increase the volume and counterclockwise to decrease the volume. The volume level will appear as a numeric signal on the VFD. After adjusting, the VFD will return to the original display after 5 seconds.

NOTE:
The audio system can be activated by:
- *Pressing the power/volume control knob.*
- *Inserting a disc.*
- *Pressing the "AM/ FM" button.*
- *Pressing the "CD" button, if a disc is in the unit.*

Bass Control:
Bass control is used to adjust the bass (low frequency) sound quality.

1) Select the bass control mode using the sound mode selector button (2).
2) When "BAS" appears, rotate the volume control knob (1) clockwise to increase the bass (low frequency) level and counterclockwise to decrease it. The bass level will appear as a numeric signal. "0" indicates the mid-point sound level. The highest bass level is "+5" and the lowest is "–5".
3) After adjusting, the display will return to full audio system information in about 5 seconds.

Treble Control:
Treble control is used to adjust the treble (high frequency) sound quality.

1) Select the treble control mode using the sound mode selector button (2).
2) When "TRE" appears, rotate the volume control knob (1) clockwise to increase the treble (high frequency) level and counterclockwise to decrease it. The treble level will appear as a numeric signal. "0" indicates the mid-point sound level.
   The highest treble level is "+5" and the lowest is "–5".
3) After adjusting, the display will return to full audio system information in about 5 seconds.

Fader Control:
Fader control adjusts the volume separation between front and rear speakers.

1) Select the fader control mode using the sound mode selector button (2).
2) When "FAD" appears, rotate the volume control knob (1) clockwise to decrease the volume from the rear speakers. The fader level display will change from "FRONT 01" up to "FRONT 15".
3) To decrease the volume from the front speakers, rotate the volume control knob (1) counterclockwise. The fader level display will change from "REAR 01" up to "REAR 15".
4) When the fader level display shows "0", the volume is centered between front and rear speakers.
5) After adjusting, the display will return to full audio system information in about 5 seconds.

Balance Control:
Balance control is used to adjust the separation between left and right speakers.

1) Select the balance control mode using the sound mode selector button (2).
2) When the "BAL" indicator appears, rotate the volume control knob (1) clockwise to decrease the balance to the left speakers. The balance level signal will change from "RIGHT 01" to "RIGHT 15".
3) To decrease balance to the right speakers, rotate the volume control knob counterclockwise. The balance level signal will change from "LEFT 01" up to "LEFT 15".
4) When "0" appears, output is centered between left and right speakers.

Downloaded from www.Manualslib.com manuals search engine

5) After adjusting, the display will return to full audio system information in about 5 seconds.

EQ (Sound Style) Control:
Select one of the pre-defined EQs (sound styles).

1) Select the EQ control mode using the sound mode selector button (2).
2) When "EQ OFF" appears, rotate the volume control knob (1) clockwise or counterclockwise to change the EQ (sound style).

Each time you rotate the volume knob (1), the EQ mode changes as follows;

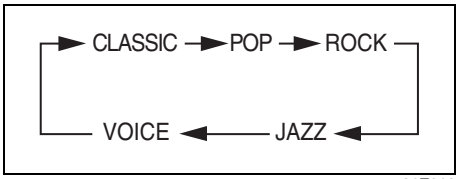

86Z012

3) After adjusting, the display will return to full audio system information in about 5 seconds.

RADIO OPERATION

1) Press the power knob (1) or the "AM/FM" button to active the audio system.
2) Press the "AM/FM" button (3) to select the desired band.
   The band changes as follows;

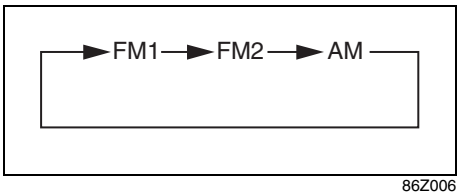

86Z006

3) Tune in the desired station using seek tuning (4), scan tuning (4), manual tuning (4), a preset button (6) or the autostore function (5).
4) To hear the preset station stored on the preset buttons, press the preset button.
5) To turn the radio on while operating the CD (MP3) player, press the "AM/FM" button.

How to Tune in a Station

Seek Tuning:
Use the seek rotary knob (4) to quickly search for a receivable station.
To search for the next receivable higher station, rotate the seek knob clockwise and hold it for more than 1 second.
To search for the previous receivable lower station, rotate the seek knob counterclockwise and hold it for more than 1 second.

Scan Tuning:
Press the scan button (4) to quickly search for receivable station and introduce each station 5 seconds.

Manual Tuning:
Rotate the rotary knob (4) for less than 1 second clockwise or counterclockwise to increase or decrease the frequency.
The frequency of the AM band changes 9 kHz each time you rotate the knob and the frequency of the FM band changes 200 kHz each time you rotate the knob.

Preset Tuning:
To select a desired preset station stored on the preset buttons in FM1, FM2, FM-A, AM, AM-A band, press the corresponding preset button (6) for less than 1 second.

NOTE:
- *The audio system has a special autostoreband in AM & FM.*
- *To recall a preset station in the autostoreband, press the "AST" button (5) for less than 1 second and choose the desired preset station.*

How to Store Stations

Autostore:
The "AST" button (5) enables stations to be stored automatically.
Press the "AST" button for more than 1 second.

Downloaded from www.Manualslib.com manuals search engine

This combines in one operation the selection and storage of 6 strong stations in the region.
If no station is found, the frequencies may remain as they were before.
After the storage of 6 strong stations in the region, preset-scan automatically starts.

Manual Memory:
Use the preset buttons to store desired stations in the AM, FM1, FM2 band.

1) Select the desired band using the band selection button (3).
2) Tune in a desired station using the tuning rotary knob (4)
3) Press the corresponding preset button (1 – 6) that you want to store the station in.

CD PLAYER OPERATION
1) Press the power knob (1) to activate the audio system.
2) Insert a CD disc into the disc slot (8) label side upwards. The audio system begins playing the first track automatically.
3) If a CD disc is already inserted in the disc slot, press the "CD" button. The audio system will play the last position you listened to.
4) To eject a CD disc, press the CD eject button (9). If the ejected disc is not taken out of the disc slot within 10 seconds, the CD disc will automatically be loaded again.
   The CD disc can be also ejected when the CD eject button is pressed at ignition key off mode.
5) After a CD disc is ejected, the audio system will change to mode that was used before playing the CD.

Play & Pause:
Press the play knob (7) to play a CD disc.
Pressing this knob (7) again in the playback mode will cause the audio system to enter in to the CD pause mode.
In the pause mode, sound is not heard.

Track Up & Down:
The track up & down rotary knob (4) allows you to make quick selections from your CD disc.

1) To play the next track, rotate this knob clockwise for less than 1 second. Each time you rotate the knob, the disc will skip to the next track.
2) To play the previous track, rotate this knob counterclockwise for less than 1 second. Each time you rotate the knob, the disc will skip to the previous track.

Cue & Review:
This function allows desired point-search within a track at a faster than normal playback speed.

1) To search for the desired point of a track, rotate this knob (4) and hold it. The audio level is reduced and the disc will play at a rate of 6 times faster than normal playback speed. When the disc reaches the desired point, release the knob and normal play will resume.
2) To cue (forward) the track, rotate this knob clockwise and to review (rewind) the track, rotate the knob counterclockwise.

Repeat Play:
To repeatedly listen to the current track, press the "2/RPT" button (6).
"RPT" is displayed in VFD and the current track will be played back repeatedly until this function is canceled.
To cancel this function, press this button once again.

Downloaded from www.Manualslib.com manuals search engine

Track Introduction:
To quickly and conveniently scan the track, use the “3/INT” button (6).
“INTRO” will be displayed in VFD and the audio system will play the first 10 seconds of each track.
When the player reaches the desired track, press this button again and normal play will resume.

Random Play:
To play a CD disc in random order, press the “4/RDM” button (6).
The “RDM” will be displayed in VFD and the audio system will play the CD disc in random order.
To cancel this function, press this button once again.

MP3 PLAYER OPERATION
Insert an MP3 disc to play the compressed audio format: MP3.

The audio system can support various disc formats.
(Masked CD/CD-R/CD-RW)

An MP3 disc operates in the same manner as an audio CD.
(Load/Eject/Play & Pause/RPT/INT/RDM)

MP3 File Name Display
If a disc has loaded, the audio system will detect the type of disc, either an audio disc or an MP3 disc and it will be displayed on the VFD. If the detected disc is an MP3, the file name will be displayed on the VFD in a scrolled manner from the left side to the right.

Directory Mode Selection Button:
1) Press this button (5) to repeatedly play the directory of the currently played MP3 file. “[DIR]” will be displayed on the VFD.
2) Press this button again to play the overall MP3 directory of the disc. “[ALL]” will be displayed on the VFD.

MP3 File Up & Down:
1) To play the next MP3 file, rotate this knob (4) clockwise. Each time you rotate the knob, the disc will skip to the next file.
2) To play the previous MP3 file, rotate this knob counterclockwise. Each time you rotate the knob, the disc will skip to the previous file.

Directory Up & Down:
1) To search a desired directory, press the “5/DN” or “6/UP” button.
2) The directory name will be displayed on the VFD.
3) After reaching the desired directory, the audio system will automatically start playing from the first MP3 file of the directory.

NOTE:
- *The audio system can support multisession recorded discs.*
- *If the MP3 disc has multisession, it takes a few time to read the disc.*

Downloaded from www.Manualslib.com manuals search engine

STEERING WHEEL REMOTE OPERATION
(if equipped in the vehicle)

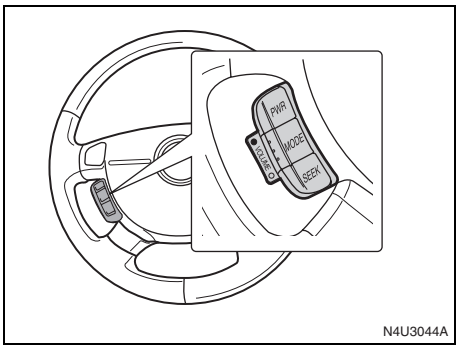

PWR:
Power ON/OFF
Each time this button is pressed, the audio system is turned on or off.

MODE:
Mode Transition
Each time this button is pressed, the mode is changed as follows:

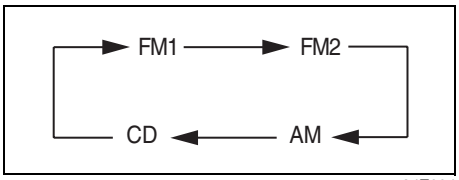

SEEK:
In the RADIO mode
- **Manual Tuning**
  By pressing this button once for less than 0.5 seconds, the frequency will move upwards step by step.
  (AM: 9 kHz, FM: 100 kHz)
- **Seek Tuning**
  By pressing this button for more than 0.5 seconds, the system will automatically seek a frequency higher than the currently marked frequency.

In the CD mode
- **Track Up**
  When this button is pressed for less than 0.5 seconds during CD play, the beginning of the next track is played automatically.
- **Cue (Fast Forward)**
  When this button is pressed for more than 0.5 seconds, the system begins a point-search within a track at a faster than normal playback speed.
  When the button is released, the player resumes normal playback.

Volume Up & Down
Each time you press the upward direction button during normal operation, the volume is increased, and the volume level appears digitally on the VFD.
Conversely, each time you press the downward direction button, the volume is decreased and the volume level appears on the VFD.

Volume step 41 indicates maximum volume.

Downloaded from www.Manualslib.com manuals search engine

Radio with CD (Double Display, MP3/WMA) (AGC-5380)

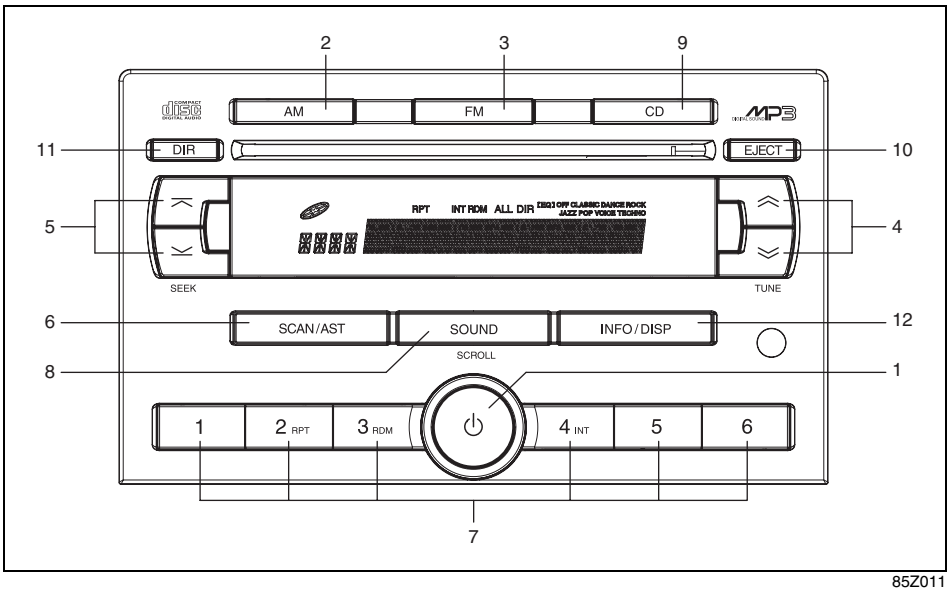

85Z011

1. Power/Volume knob
2. AM button
3. FM button
4. TUNE button
5. SEEK button
6. SCAN/AST button
7. Preset station buttons
   - 2 RPT: Repeat button
   - 3 RDM: Random button
   - 4 INT: Introduction button
8. SOUND (SCROLL) button
9. CD button
10. EJECT button
11. DIR button
12. INFO/DISP button

PLAYING THE RADIO

Power/Volume knob (1):
Press and release this knob to turn the system on and off.
Turn this knob clockwise or counterclockwise to increase or decrease the volume.
Press this button for longer than two seconds to mute the system.

Finding a Station

AM button (2):
Press this button to switch to an AM station. The display will show the selection.

FM button (3):
Press this button to switch to an FM station. The display will show the selection.

TUNE button (4):
Press this button to select radio stations.
Press the up arrows to increase or the down arrows to decrease the radio frequencies.

SEEK button (5):
Press this button to seek radio stations.
Press the up arrows to seek the next higher frequency radio station or the down arrows to seek the next lower frequency radio station.

SCAN/AST button (6):

Scan
Press this button to scan radio stations. The radio will go to a station, play for a few

Downloaded from www.Manualslib.com manuals search engine

seconds, then go on to the next station. Press this button again to stop scanning. The radio will only scan stations with a strong signal that are in the selected band.

Automatic Store
Press this button for longer than two seconds to use Automatic Store.
FM1's six preset stations with the strongest signal in the region can be automatically stored. The display will show "AUTO SCANNING" and "SCANNING" will flash on the display.

Stored stations will flash for a short time on the display in sequence. Once the stations are stored, the radio will switch to FM1 and the first preset station will begin to play. "FM-A" will appear on the display when listening to the automatically stored stations. Press the AM or FM button to cancel the automatic store function.

Preset station buttons (7):

Setting Preset Stations
Up to 24 stations (six FM1, six FM2, six AM1, and six AM2), can be programmed on the preset station buttons (7), by performing the following steps:

1) Turn the radio on.
2) Press the AM or FM button to select FM1, FM2, AM1 or AM2.
3) Tune in the desired station.
4) Press and hold one of the preset station buttons for longer than two seconds. The corresponding preset button number will flash on the display when the station has been set. Whenever that numbered preset button is pressed, the memorized station will be tuned in.
5) Repeat the previous four steps for each preset button.

SOUND BUTTON SCROLL ORDER
When you repeatedly press the SOUND button, the functions will scroll in the following order: BASS, TRE, BAL, FADE, EQ OFF, and VOL.

SOUND button (8):

Setting the Tone (Bass/Treble)
Press the SOUND button until "BAS" appears on the display. Turn the volume knob to increase or to decrease the bass. The display will show the bass level. When finished making the selection, press the SOUND button to set the bass level selection.

Press the SOUND button until "TRE" appears on the display. Turn the volume knob to increase or to decrease the treble. The display will show the treble level. When finished making the selection, press the SOUND button to set the treble level selection. If a station is weak or noisy, decrease the treble.

Adjusting the Speakers (Balance/Fade)
To adjust the balance between the right and the left speakers, press the SOUND button until "BAL" appears on the display. Turn the volume knob to shift the balance between the right and left speakers. The display will show the balance level. When finished making the selection, press the SOUND button to set the balance level.

To adjust the fade between the front and the rear speakers, press the SOUND but-

Downloaded from www.Manualslib.com manuals search engine

ton until “FAD” appears on the display. Turn the volume knob to shift the balance between the front and rear speakers. The display will show the fade level. When finished making the selection, press the SOUND button to set the fade level.

Setting the Equalization
The scroll order for the customized equalization settings is EQ OFF, CLASSIC, DANCE, ROCK, JAZZ, POP, VOICE, TECHNO, EQ OFF.

Press the SOUND button until “EQ OFF” appears on the display to select customized equalization settings designed for classic, dance, rock, jazz, pop, voice and techno music. Turn the volume knob until the desired equalization setting appears on the display. When finished making the selection, press the SOUND button to set the equalization setting.

To cancel an equalization setting, press the SOUND button until “EQ OFF” appears on the display, turn the volume knob until “OFF” appears on the display, then press the SOUND button again.

PLAYING A CD
Insert a CD partway into the slot, label side up. The player will pull it in and the CD should begin playing. You can insert a CD with the ignition off.

When the CD is inserted, “CDP” will appear on the display. As the CD is loading “Filecheck” will appear on the display. As each new track starts to play, the track and track number will appear on the display.

If the ignition or radio is turned off with a CD in the player, it will stay in the player. When a CD is in the player and the ignition is turned on, the radio must be turned on before the CD will start playback. When the ignition and radio are turned on, the CD will start playing where it stopped, if it was the last selected audio source.

The CD player can play the smaller 3 inch (8 cm) single CDs with an adapter ring. Full-size CDs and the smaller CDs are loaded in the same manner.

If playing a CD-R, the sound quality may be reduced due to CD-R quality, the method of recording, the quality of the music that has been recorded, and the way the CD-R has been handled. There may be an increase in skipping, difficulty in finding tracks, and/or difficulty in loading and ejecting. If these problems occur, check the bottom surface of the CD. If the surface of the CD is damaged, such as cracked, broken, or scratched, the CD will not play properly. If the surface of the CD is soiled, see “Cautions on Handling” for more information.

If there is no apparent damage, try a known good CD.

Do not add any label to a CD, it could get caught in the CD player. If a CD is recorded on a personal computer and a description label is needed, try labeling the top of the recorded CD with a marking pen instead.

CAUTION

If you add any label to a CD, insert more than one CD into the slot at a time, or attempt to play scratched or damaged CDs, you could damage the CD player. When using the CD player, use only CDs in good condition without any added label, load one CD at a time, and keep the CD player and the loading slot free of foreign materials, liquids, and debris.

If an error appears on the display, see “CD Messages” later in this section.

Downloaded from www.Manualslib.com manuals search engine

2 RPT (Repeat) button (7):
Press this button to repeat the current track. “RPT” will appear on the display. Press this button again to turn off repeat play.

3 RDM (Random) button (7):
Press this button to hear the tracks in random, rather than sequential, order. “RDM” will appear on the display. Press this button again to turn off random play.

4 INT (Scan) button (7):
Press this button to listen to the first few seconds of each track on each loaded CD. “INTRO” will appear on the display. To stop scanning, press this button again. The current track will begin to play.

TUNE (Previous/Next Track) button (4):
Press the down arrows to go to the start of the current track or press the up arrows to go to the next track. The track number will appear on the display. The player will continue moving backward or forward through the CD with each press of the up or down arrows.

AM button (2):
Press this button to listen to AM radio stations when a CD is playing. The inactive CD will remain safely inside the radio for future listening.

FM button (3):
Press this button to listen to FM radio stations when a CD is playing. The inactive CD will remain safely inside the radio for future listening.

CD button (9):
Press this button to play a CD when listening to the radio. “CDP” will appear on the display when the CD player has been selected. The CD symbol will appear on the display when a CD is loaded.

Press this button while a CD is playing to pause the CD. “PAUSE” will flash on the display. Press this button again to resume playing the CD.

EJECT button (10):
Press this button to eject a CD. The only way a CD can be ejected from the player is by pressing the eject button. The CD can eject when the ignition or the radio is turned off.

Using an MP3 CD

MP3 Format
If you burn your own MP3/WMA disc on a personal computer:

- Make sure the MP3/WMA files are recorded on a CD-R disc.
- Do not mix standard audio and MP3/WMA files on one disc.
- Make sure each MP3/WMA file has a .mp3 or .wma extension, other file extensions may not work.
- Files can be recorded with a variety of fixed or variable bit rates. Song title, artist name, and album will be available for display by the radio when recorded using ID3 tags version 1 and 2.
- Create a folder structure that makes it easy to find songs while driving. Organize songs by albums using one folder for each album. Each folder or album should contain 18 songs or less.
- Make sure to finalize the disc when burning an MP3/WMA disc, using multiple sessions. It is usually better to burn the disc all at once.

The player will be able to read and play a maximum of 50 folders, 5 sessions, and 999 files. Long file names and folder names may use more disc memory space than necessary. To conserve space on the disc, minimize the length of the file and folder names. You can also play an MP3/WMA CD that was recorded using no file folders. The system can support up to 8

Downloaded from www.Manualslib.com manuals search engine

folders in depth, but keep the depth of the folders to a minimum in order to keep down the complexity and confusion in trying to locate a particular folder during playback. If a CD contains more than the maximum of 50 folders, 5 sessions, and 999 files the player will let you access and navigate up to the maximum, but all items over the maximum will be ignored.

Root Directory
The root directory will be treated as a folder. If the root directory has compressed audio files, the directory will be displayed as “ROOT”. All files contained directly under the root directory will be accessed prior to any other directory.

Empty Directory or Folder
If a root directory or a folder exists somewhere in the file structure that contains only folders/subfolders and no compressed files directly beneath them, the player will advance to the next folder in the file structure that contains compressed audio files and the empty folder will not be displayed or numbered.

No Folder
When the CD contains only compressed files, the files will be located under the root folder. The next and previous folder functions will not work on a CD that was recorded without folders or playlists. When displaying the name of the folder, the radio will display “ROOT”.

When the CD contains only compressed audio files, but no folders, all files will be located under the root folder. When the radio displays the name of the folder, the radio will display “ROOT”.

Order of Play
Tracks will be played in the following order:

- Playback will begin from the first track under the root directory.
- When all tracks from the root directory have been played, playback will continue from files, according to their numerical listing.
- After playing the last track from the last folder, the player will begin playing again at the first track of the first folder or root directory.

File System and Naming
The song name in the ID3 tag will be displayed. If the song name is not present in the ID3 tag, then the radio will display the file name without the extension (such as MP3/WMA) instead.

Track names longer than 32 characters or 4 pages will be shortened. The display will not show parts of words on the last page of text and the extension of the filename will not be displayed.

Playing an MP3/WMA
With the ignition on, insert a CD partway into the slot, label side up. The player will pull it in, “Loading”, then “Filecheck”, and then “MP3” or “WMA” will appear on the display. The CD should begin playing. You cannot insert a CD with the ignition switch in the “OFF” position.
As each new track starts to play, the track number, and the song name will appear on the display.
If the ignition or radio is turned off with a CD in the player, it will stay in the player. When a CD is in the player and the ignition is turned on, the radio must be turned on before the CD will start playback. When the ignition and radio are turned on, the CD will start playing where it stopped, if it was the last selected audio source.

The CD player can play the smaller 3 inch (8 cm) single CDs with an adapter ring. Full-size CDs and the smaller CDs are loaded in the same manner.

If playing a CD-R, the sound quality may be reduced due to CD-R quality, the method of recording, the quality of the music that has been recorded, and the way the CD-R has been handled. There may be an increase in skipping, difficulty in finding tracks, and/or difficulty in loading and ejecting. If these problems occur, check the bottom surface of the CD. If the surface of the CD is damaged, such as cracked, broken, or scratched, the CD will not play properly. If the surface of the CD is soiled, see “Cautions on Handling” for more information.

If there is no apparent damage, try a known good CD.

Downloaded from www.Manualslib.com manuals search engine

Do not add any label to a CD, it could get caught in the CD player. If a CD is recorded on a personal computer and a description label is needed, try labeling the top of the recorded CD with a marking pen instead.

CAUTION

If you add any label to a CD, insert more than one CD into the slot at a time, or attempt to play scratched or damaged CDs, you could damage the CD player. When using the CD player, use only CDs in good condition without any added label, load one CD at a time, and keep the CD player and the loading slot free of foreign materials, liquids, and debris.

If an error appears on the display, see “CD Messages” later in this section.

All of the CD functions work the same while playing an MP3/WMA, except for those listed here. See “PLAYING A CD” earlier for more information.

SOUND (SCROLL) button (8) (MP3/WMA mode only):
Press this button for longer than two seconds. The song title or other available information of a song will scroll on/off. The default is scroll on. The scroll mode can be changed only when this button is pressed for longer than two seconds.

DIR (Directory) button (11):
Press this button to repeat the tracks in the current directory. “DIR” will appear on the display.
Press this button again to repeat the tracks in all of the directories. “ALL” will appear on the display.
Press this button again to turn off repeat play.

SEEK (Previous/Next Folder) button (5) (in MP3/WMA mode):
Press the up or down arrows to change the folder. If the CD-R doesn’t have any folders, “ROOT” will flash on the display for a short time.

TUNE (Previous/Next Track) button (4):
Press the down arrows to go to the start of the current track or press the up arrows to go to the next track. The track number will appear on the display. The player will continue moving backward or forward through the CD with each press of the up or down arrows.

INFO/DISP (Information/Display) button (12):
Press this button to display additional text information related to the current MP3/WMA song, such as: Song Title, Album Title, and Artist. Bit rate may also appear on display.

When information is not available, “No Info” will appear on the display.

Press this button for longer than two seconds to change display mode.

Downloaded from www.Manualslib.com manuals search engine

CD Messages

CHECK CD:
If this message appears on the display and/or the CD comes out, it could be for one of the following reasons:

- It is very hot. When the temperature returns to normal, the CD should play.
- You are driving on a very rough road. When the road becomes smoother, the CD should play.
- The CD is dirty, scratched, wet, or upside down.
- The air is very humid. If so, wait about an hour and try again.
- The format of the CD may not be compatible. See “MP3 Format” earlier in this section.
- There may have been a problem while burning the CD.
- The label may be caught in the CD player.

If the CD is not playing correctly, for any other reason, try a known good CD.

If any error occurs repeatedly or if an error cannot be corrected, contact your dealer. If the radio displays an error message, write it down and provide it to your dealer when reporting the problem.

AUDIO STEERING WHEEL CONTROLS

If your vehicle has this feature, you can control some functions of audio system using the buttons on your steering wheel.

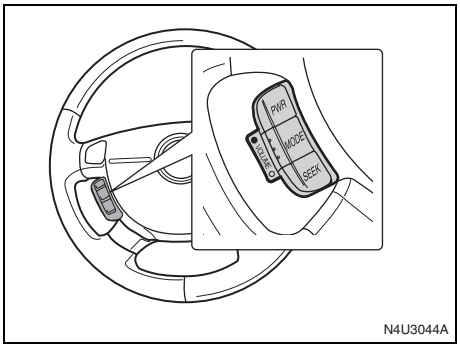

PWR button
Press this button to turn the audio system on/off.

MODE button
Press this button to select the desired mode.
The mode changes as follows;

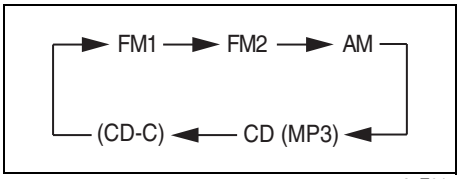

VOLUME button
Press the “•” button to increase the volume and the “o” button to decrease the volume.

SEEK button

Mode	Short press *1	Long press *2
Radio	Next preset station	Next receivable station
Cassette	Forward AMS	Fast forward
CD	Next track	Fast forward

*1: Press and release the button within 0.5 seconds.
*2: Press and hold the button for longer than 0.5 seconds.

Downloaded from www.Manualslib.com manuals search engine

INSTRUMENT PANEL

Radio with Six-Disc CD (Double Display, MP3/WMA) (AGH-5400)

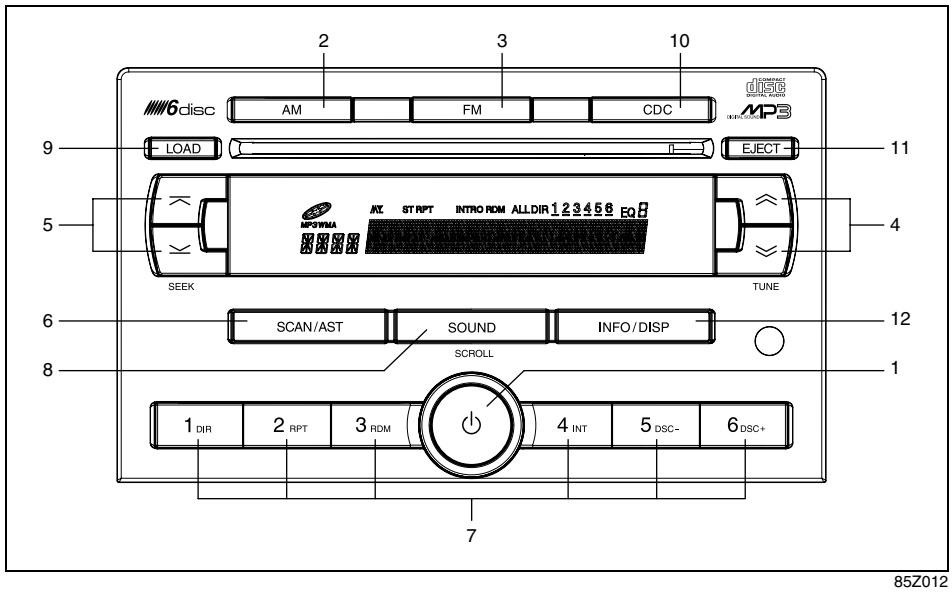

85Z012

1. Power/Volume knob
2. AM button
3. FM button
4. TUNE button
5. SEEK button
6. SCAN/AST button
7. Preset station buttons
   - 1 DIR: Directory button
   - 2 RPT: Repeat button
   - 3 RDM: Random button
   - 4 INT: Introduction button
   - 5 DSC–: Previous CDC button
   - 6 DSC+: Next CDC button
8. SOUND (SCROLL) button
9. LOAD button
10. CDC button
11. EJECT button
12. INFO/DISP button

PLAYING THE RADIO

Power/Volume knob (1):
Press and release this knob to turn the system on and off.
Turn this knob clockwise or counterclockwise to increase or decrease the volume.
Press this button for longer than two seconds to mute the system.

Finding a Station

AM button (2):
Press this button to switch to an AM station. The display will show the selection.

FM button (3):
Press this button to switch to an FM station. The display will show the selection.

TUNE button (4):
Press this button to select radio stations.
Press the up arrows to increase or the down arrows to decrease the radio frequencies.

SEEK button (5):
Press this button to seek radio stations.
Press the up arrows to seek the next higher frequency radio station or the down arrows to seek the next lower frequency radio station.

SCAN/AST button (6):

Scan
Press this button to scan radio stations. The radio will go to a station, play for a few

Downloaded from www.Manualslib.com manuals search engine

seconds, then go on to the next station. Press this button again to stop scanning. The radio will only scan stations with a strong signal that are in the selected band.

Automatic Store
Press this button for longer than two seconds to use Automatic Store.
FM1's six preset stations with the strongest signal in the region can be automatically stored. The display will show "AUTO SCANNING" and "SCANNING" will flash on the display.

Stored stations will flash for a short time on the display in sequence. Once the stations are stored, the radio will switch to FM1 and the first preset station will begin to play. "FM-A" will appear on the display when listening to the automatically stored stations. Press the AM or FM button to cancel the automatic store function.

Preset station buttons (7):

Setting Preset Stations
Up to 24 stations (six FM1, six FM2, six AM1, and six AM2), can be programmed on the preset station buttons (7), by performing the following steps:

1) Turn the radio on.
2) Press the AM or FM button to select FM1, FM2, AM1 or AM2.
3) Tune in the desired station.
4) Press and hold one of the preset station buttons for longer than two seconds. The preset button number will flash on the display when the station has been set. Whenever that numbered preset button is pressed, the memorized station will be tuned in.
5) Repeat the previous four steps for each preset button.

SOUND BUTTON SCROLL ORDER
When you repeatedly press the SOUND button, the functions will scroll in the following order: BASS, TRE, BAL, FADE, EQ OFF, and VOL.

SOUND button (8):

Setting the Tone (Bass/Treble)
Press the SOUND button until "BAS" appears on the display. Turn the volume knob to increase or to decrease the bass. The display will show the bass level. When finished making the selection, press the SOUND button to set the bass level.

Press the SOUND button until "TRE" appears on the display. Turn the volume knob to increase or to decrease the treble. The display will show the treble level. When finished making the selection, press the SOUND button to set the treble level. If a station is weak or noisy, decrease the treble.

Adjusting the Speakers (Balance/Fade)
To adjust the balance between the right and the left speakers, press the SOUND button until "BAL" appears on the display. Turn the volume knob to shift the balance between the right and left speakers. The display will show the balance level. When finished making the selection, press the SOUND button to set the balance level.

To adjust the fade between the front and the rear speakers, press the SOUND button until "FAD" appears on the display.

Downloaded from www.Manualslib.com manuals search engine

Turn the volume knob to shift the balance between the front and the rear speakers. The display will show the fade level. When finished making the selection, press the SOUND button to set the fade level.

Setting the Equalization
The scroll order for the customized equalization settings is EQ OFF, CLASSIC, DANCE, ROCK, JAZZ, POP, VOICE, TECHNO, EQ OFF.

Press the SOUND button until “EQ OFF” appears on the display to select customized equalization settings designed for classic, dance, rock, jazz, pop, voice and techno music. Turn the volume knob until the desired equalization setting appears on the display.
When finished making the selection, press the SOUND button to set the equalization setting.

To cancel an equalization setting, press the SOUND button until “EQ OFF” appears on the display, turn the volume knob until “OFF” appears on the display, then press the SOUND button again.

PLAYING A CD(s)

LOAD button (9):
Press this button to load CDs into the CD player. This CD player will hold up to six CDs.

1) Press and release the LOAD button. A message to select a slot number from 1–6 will appear on display.
2) Press the desired slot number. Wait for the message to insert the disc.
3) Load a CD. Insert the CD partway into the slot, label side up. The player will pull the CD in.

To insert multiple CDs, do the following:
1) Press and hold the LOAD button for two seconds. You will hear a beep and a message to load multiple discs will be displayed.
2) Follow the displayed instruction on when to insert the discs. The CD player takes up to six CDs.
3) Press the LOAD button again to cancel loading more CDs.

As each CD is inserted, “CDP” will appear on the display and as each CD is loading, “Filecheck” will appear on the display.
Once playback begins, the track and track number will appear on the display.

If the ignition or radio is turned off with a CD in the player, it will stay in the player. When a CD is in the player and the ignition is turned on, the radio must be turned on before the current CD will start playback. When the ignition and radio are turned on, the CD will start playing where it stopped, if it was the last selected audio source.

The CD player can play the smaller 3 inch (8 cm) single CDs with an adapter ring. Full-size CDs and the smaller CDs are loaded in the same manner.

If playing a CD-R, the sound quality may be reduced due to CD-R quality, the method of recording, the quality of the music that has been recorded, and the way the CD-R has been handled. There may be an increase in skipping, difficulty in finding tracks, and/or difficulty in loading and ejecting. If these problems occur, check the bottom surface of the CD. If the surface of the CD is damaged, such as cracked, broken, or scratched, the CD will not play properly. If the surface of the CD is soiled, see “Cautions on Handling” for more information.

If there is no apparent damage, try a known good CD.

Do not add any label to a CD, it could get caught in the CD player. If a CD is recorded on a personal computer and a description label is needed, try labeling the top of the recorded CD with a marking pen instead.

Downloaded from www.Manualslib.com manuals search engine

CAUTION

If you add any label to a CD, insert more than one CD into the slot at a time, or attempt to play scratched or damaged CDs, you could damage the CD player. When using the CD player, use only CDs in good condition without any added label, load one CD at a time, and keep the CD player and the loading slot free of foreign materials, liquids, and debris.

If an error appears on the display, see “CD Messages” later in this section.

2 RPT (Repeat) button (7):
Press this button to repeat the current track. “RPT” will appear on the display. Press this button again to turn off repeat play.

3 RDM (Random) button (7):
Press this button to hear the tracks in random, rather than sequential, order. “RDM” will appear on the display.
To play tracks from all CDs loaded in a six-disc CD player in random order, press this button until a message that all discs are randomized is displayed. Press the same button again to turn off random play.

4 INT (Scan) button (7):
Press this button to listen to the first few seconds of each track on each loaded CD. “INTRO” will appear on the display. To stop scanning, press this button again. The current track will begin to play.

5 DSC– (Previous CD) button (7):
Press this button to go back to the start of the previous CD.

6 DSC+ (Next CD) button (7):
Press this button to go forward to the start of the next CD.

TUNE (Previous/Next Track) button (4):
Press the down arrows to go to the start of the current track or press the up arrows to go to the next track. The track number will appear on the display. The player will continue moving backward or forward through the CD with each press of the up or down arrows.

AM button (2):
Press this button to listen to AM radio stations when a CD is playing. The inactive CD will remain safely inside the radio for future listening.

FM button (3):
Press this button to listen to FM radio stations when a CD is playing. The inactive CD will remain safely inside the radio for future listening.

CDC button (10):
Press this button to play a CD when listening to the radio. “CDP” will appear on the display when the CD player has been selected. The CD symbol will appear on the display when a CD is loaded.

Press this button while a CD is playing to pause the CD. “PAUSE” will flash on the display. Press this button again to resume playing the CD.

EJECT button (11):
Press this button to eject a CD. Press and hold this button to eject all CDs. The only way a CD can be ejected from the player is by pressing the eject button. The CD can eject when the ignition or the radio is turned off.

Using an MP3 CD

MP3 Format
If you burn your own MP3/WMA disc on a personal computer:

- Make sure the MP3/WMA files are recorded on a CD-R disc.
- Do not mix standard audio and MP3/WMA files on one disc.
- Make sure each MP3/WMA file has a .mp3 or .wma extension, other file extensions may not work.
- Files can be recorded with a variety of fixed or variable bit rates. Song title, artist name, and album will be available for display by the radio when recorded using ID3 tags version 1 and 2.
- Create a folder structure that makes it easy to find songs while driving. Organize songs by albums using one folder for each album. Each folder or album should contain 18 songs or less.

Downloaded from www.Manualslib.com manuals search engine

- Make sure to finalize the disc when burning an MP3/WMA disc, using multiple sessions. It is usually better to burn the disc all at once.

The player will be able to read and play a maximum of 50 folders, 5 sessions, and 999 files. Long file names and folder names may use more disc memory space than necessary. To conserve space on the disc, minimize the length of the file and folder names. You can also play an MP3/WMA CD that was recorded using no file folders. The system can support up to 8 folders in depth, but keep the depth of the folders to a minimum in order to keep down the complexity and confusion in trying to locate a particular folder during playback. If a CD contains more than the maximum of 50 folders, 5 sessions, and 999 files the player will let you access and navigate up to the maximum, but all items over the maximum will be ignored.

Root Directory
The root directory will be treated as a folder. If the root directory has compressed audio files, the directory will be displayed as “ROOT”. All files contained directly under the root directory will be accessed prior to any other directory.

Empty Directory or Folder
If a root directory or a folder exists somewhere in the file structure that contains only folders/subfolders and no compressed files directly beneath them, the player will advance to the next folder in the file structure that contains compressed audio files and the empty folder will not be displayed or numbered.

No Folder
When the CD contains only compressed files, the files will be located under the root folder. The next and previous folder functions will not work on a CD that was recorded without folders. When displaying the name of the folder, the radio will display “ROOT”.

When the CD contains only compressed audio files, but no folders, all files will be located under the root folder. When the radio displays the name of the folder, the radio will display “ROOT”.

Order of Play
Tracks will be played in the following order:

- Playback will begin from the first track under the root directory.
- When all tracks from the root directory have been played, playback will continue from files, according to their numerical listing.
- After playing the last track from the last folder, the player will begin playing again at the first track of the first folder or root directory.

File System and Naming
The song name in the ID3 tag will be displayed. If the song name is not present in the ID3 tag, then the radio will display the file name without the extension (such as MP3/WMA) instead.

Track names longer than 32 characters or 4 pages will be shortened. The display will not show parts of words on the last page of text and the extension of the filename will not be displayed.

Playing an MP3/WMA
With the ignition on, insert a CD partway into the slot, label side up. The player will pull it in, “Loading”, then “Filecheck”, and then “MP3” or “WMA” will appear on the display. The CD should begin playing. You cannot insert a CD with the ignition switch in the “OFF” position.

As each new track starts to play, the track number, and the song name will appear on the display.

If the ignition or radio is turned off with a CD in the player, it will stay in the player. When a CD is in the player and the ignition is turned on, the radio must be turned on before the CD will start playback. When the ignition and radio are turned on, the CD will start playing where it stopped, if it was the last selected audio source.

The CD player can play the smaller 3 inch (8 cm) single CDs with an adapter ring. Full-size CDs and the smaller CDs are loaded in the same manner.

If playing a CD-R, the sound quality may be reduced due to CD-R quality, the method of recording, the quality of the

Downloaded from www.Manualslib.com manuals search engine

music that has been recorded, and the way the CD-R has been handled. There may be an increase in skipping, difficulty in finding tracks, and/or difficulty in loading and ejecting. If these problems occur, check the bottom surface of the CD. If the surface of the CD is damaged, such as cracked, broken, or scratched, the CD will not play properly. If the surface of the CD is soiled, see “Cautions on Handling” for more information.

If there is no apparent damage, try a known good CD.

Do not add any label to a CD, it could get caught in the CD player. If a CD is recorded on a personal computer and a description label is needed, try labeling the top of the recorded CD with a marking pen instead.

CAUTION

If you add any label to a CD, insert more than one CD into the slot at a time, or attempt to play scratched or damaged CDs, you could damage the CD player. When using the CD player, use only CDs in good condition without any added label, load one CD at a time, and keep the CD player and the loading slot free of foreign materials, liquids, and debris.

If an error appears on the display, see “CD Messages” later in this section.

All of the CD functions work the same while playing an MP3/WMA, except for those listed here. See “PLAYING A CD(s)” earlier for more information.

SOUND (SCROLL) button (8) (MP3/WMA mode only):
Press this button for longer than two seconds. The song title and other available information of the song will scroll on/off. The default is scroll on. The scroll mode can be changed only when this button is pressed for longer than two seconds.

1 DIR (Directory) button (7):
Press this button to repeat the tracks in the current directory. “DIR” will appear on the display.
Press this button again to repeat the tracks in all of the directories. “ALL” will appear on the display.
Press this button again to turn off repeat play.

SEEK (Previous/Next Folder) button (5) (in MP3/WMA mode):
Press the up or down arrows to change the folder. If the CD-R doesn’t have any folders, “ROOT” will flash on the display for a short time.

TUNE (Previous/Next Track) button (4):
Press the down arrows to go to the start of the current track or press the up arrows to go to the next track. The track number will appear on the display. The player will continue moving backward or forward through the CD with each press of the up or down arrows.

INFO/DISP (Information/Display) button (12):
Press this button to display additional text information related to the current MP3/WMA song, such as: Song Title, Album Title, and Artist. Bit rate may also appear on display.

When information is not available, “No Info” will appear on the display.

Press this button for longer than two seconds to change display mode.

CD Messages

CHECK CD:
If this message appears on the display and/or the CD comes out, it could be for one of the following reasons:

- It is very hot. When the temperature returns to normal, the CD should play.
- You are driving on a very rough road. When the road becomes smoother, the CD should play.
- The CD is dirty, scratched, wet, or upside down.
- The air is very humid. If so, wait about an hour and try again.
- The format of the CD may not be compatible. See “MP3 Format” earlier in this section.
- There may have been a problem while burning the CD.

Downloaded from www.Manualslib.com manuals search engine

- The label may be caught in the CD player.

If the CD is not playing correctly, for any other reason, try a known good CD.

If any error occurs repeatedly or if an error cannot be corrected, contact your dealer. If the radio displays an error message, write it down and provide it to your dealer when reporting the problem.

AUDIO STEERING WHEEL CONTROLS
If your vehicle has this feature, you can control some functions of audio system using the buttons on your steering wheel.

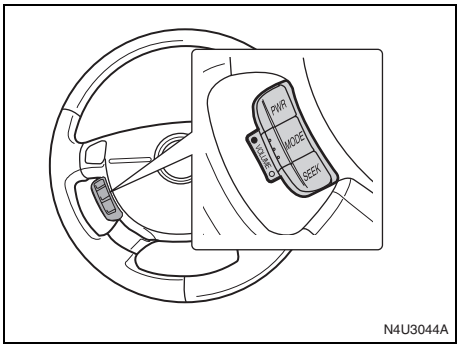

PWR button
Press this button to turn the audio system on/off.

MODE button
Press this button to select the desired mode.
The mode changes as follows;

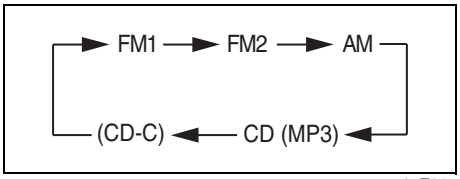

85Z015

VOLUME button
Press the "•" button to increase the volume and the "o" button to decrease the volume.

SEEK button

Mode	Short press *1	Long press *2
Radio	Next preset station	Next receiv-able station
Cassette	Forward AMS	Fast forward
CD	Next track	Fast forward

*1: Press and release the button within 0.5 seconds.
*2: Press and hold the button for longer than 0.5 seconds.

Downloaded from www.Manualslib.com manuals search engine

Radio and Tape with CD (Double Display, MP3/WMA) (AGK-5390)

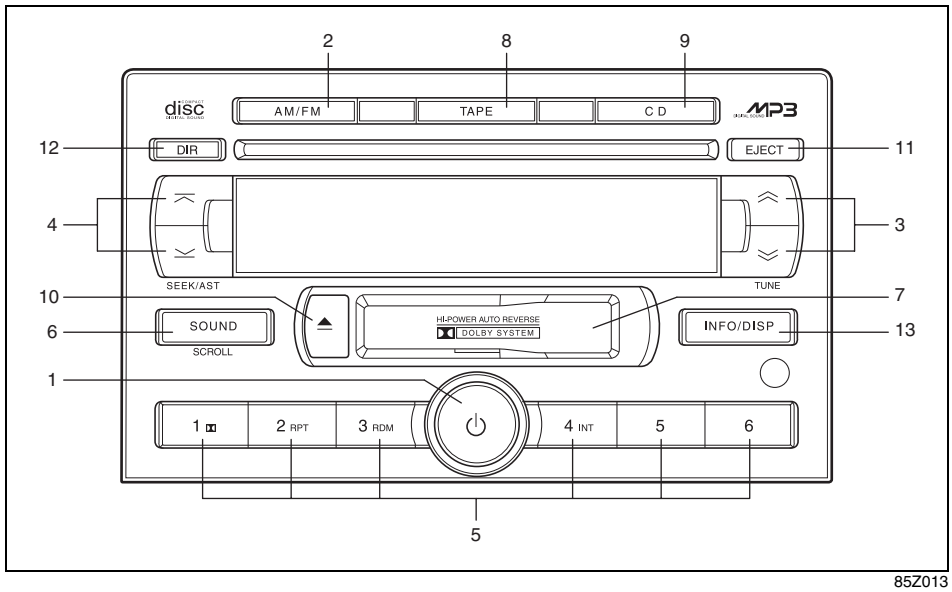

85Z013

1. Power/Volume knob
2. AM/FM button
3. TUNE button
4. SEEK/AST button
5. Preset station buttons
   - 2 RPT: Repeat button
   - 3 RDM: Random button
   - 4 INT: Introduction button
6. SOUND (SCROLL) button
7. Tape insert hole
8. TAPE button
9. CD button
10. EJECT button (Tape)
11. EJECT button (CD)
12. DIR button
13. INFO/DISP button

PLAYING THE RADIO

Power/Volume knob (1):
Press this knob to turn the system on and off.
Turn this knob clockwise or counterclockwise to increase or decrease the volume.
Press this button for longer than two seconds to mute the system.

Finding a Station

AM/FM button (2):
Press this button to select the desired AM or FM band. The display will show the selection. The band changes as follows:

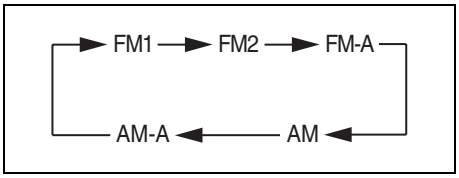

85Z016

TUNE button (3):
Press this button to select radio stations. (Manual tuning)

Press the up arrows to select higher frequency stations.
Press the down arrows to select lower frequency stations.

The frequency of the AM band changes 9 KHz each time and the frequency of the FM band changes 200 KHz each time.

Downloaded from www.Manualslib.com manuals search engine

SEEK/AST button (4):

Seek
Press this button to seek radio stations. (Seek tuning)

To search for the next receivable higher frequency station, press the up arrows.
To search for the next receivable lower frequency station, press the down arrows.

Automatic Store
Press this button for longer than two seconds to use Automatic Store.
FM1's 6 preset stations with the strongest signal in the region can be automatically stored. Display will show "AUTO SCANNING". And "SCANNING" will flash on the display.

Stored stations will flash for a short time on the display in sequence. Once the stations are stored, the radio will switch to FM1 and the first preset station will begin to play. "FM-A" will appear on the display when listening to the automatically stored stations. Press the AM/FM button to cancel the automatic store function.

Preset station buttons (5):

Setting Preset Stations
Up to 18 stations (six FM1, six FM2, six AM), can be programmed on the preset station buttons (5), by performing the following steps:

1) Turn the radio on.
2) Press the AM/FM button to select FM1, FM2, AM.
3) Tune in the desired station.
4) Press and hold one of the preset station buttons for longer than two seconds. The preset button number will flash on the display when the station has been set. Whenever that numbered preset button is pressed, the memorized station will be tuned in.
5) Repeat the previous four steps for each preset button.

SOUND BUTTON SCROLL ORDER
When you repeatedly press the SOUND button, the functions will scroll in the following order: BASS, TRE, BAL, FADE, EQ OFF, and VOL.

SOUND button (6):

Setting the Tone (Bass/Treble)
Press the SOUND button until "BAS" appears on the display. Turn the volume knob to increase or to decrease the bass. The display will show the bass level. When finished making the selection, press the SOUND button to set the bass level selection.

Press the SOUND button until "TRE" appears on the display. Turn the volume knob to increase or to decrease the treble. The display will show the treble level. When finished making the selection, press the SOUND button to set the treble level selection. If a station is weak or noisy, decrease the treble.

Adjusting the Speakers (Balance/Fade)
To adjust the balance between the right and the left speakers, press the SOUND button until "BAL" appears on the display. Turn the volume knob to shift the balance between the right and left speakers. The display will show the balance level. When finished making the selection, press the SOUND button to set the balance level.

To adjust the fade between the front and the rear speakers, press the SOUND but-

Downloaded from www.Manualslib.com manuals search engine

ton until “FAD” appears on the display. Turn the volume knob to shift the balance between the front and the rear speakers. The display will show the fade level. When finished making the selection, press the SOUND button to set the fade level.

Setting the Equalization
The scroll order for the customized equalization settings is EQ OFF, CLASSIC, DANCE, ROCK, JAZZ, POP, VOICE, TECHNO, EQ OFF.

Press the SOUND button until “EQ OFF” appears on the display to select customized equalization settings designed for classic, dance, rock, jazz, pop, voice and techno music. Turn the volume knob until the desired equalization setting appears on the display. When finished making the selection, press the SOUND button to set the equalization setting.

To cancel an equalization setting, press the SOUND button until “EQ OFF” appears on the display, turn the volume knob until “OFF” appears on the display, then press the SOUND button again.

PLAYING A TAPE
Insert a tape into the tape insert hole (7). You can see the message “LOAD” and “PLAY”.

2 RPT (Repeat) button (5):
Press this button to repeat the current track. “RPT” will appear on the display. Press this button again to turn off repeat play.

TUNE button (3):
Press the down arrows to go to rewind to the first track on the current side of the tape. “REW” will appear on the display. When the tape is fully rewound, it is played back from the beginning of the same side. To stop the rewind movement, press the TAPE button (8) or the down arrows button or the repeat button (5). The repeat button (5) is effective to only the case when the repeat function is not active.
Press the up arrows to advance to the first track on the opposite side of the tape. “FF” will appear on the display. When the tape reaches the end, it is automatically reversed and played back from the beginning of the opposite side. To stop the fast forward movement, press the TAPE button (8) or the up arrows button or the repeat button (5). The repeat button (5) is effective to only the case when the repeat function is not active.

SEEK/AST (Previous/Next Track) button (4):
Press the down arrows to go to the start of the current track or press the up arrows to go to the next track. “A-FF” or “A-REW” will appear on the display. The player will continue moving backward or forward through the TAPE with each press of the up or down arrows.

TAPE button (8):
Press this button to change the play direction. The tape player will change to forward or reverse direction.

AM/FM button (2):
Press this button to listen to the radio when a tape is playing. The inactive tape will remain safely inside the radio for future listening.

CD button (9):
Press this button to play a CD when a tape is playing. “CDP” will appear on the display when the CD player has been selected. The CD symbol will appear on the display when a CD is loaded.

Press this button while a CD is playing to pause the CD. “PAUSE” will flash on the display. Press this button again to start playing the CD.

EJECT button (10):
Press this button to eject a tape.

Downloaded from www.Manualslib.com manuals search engine

PLAYING A CD
Insert a CD partway into the slot, label side up. The player will pull it in and the CD should begin playing. You can insert a CD with the ignition off.

When the CD is inserted, “CDP” will appear on the display. As the CD is loading “Filecheck” will appear on the display. As each new track starts to play, the track and track number will appear on the display.

If the ignition or radio is turned off with a CD in the player, it will stay in the player. When a CD is in the player and the ignition is turned on, the radio must be turned on before the CD will start playback. When the ignition and radio are turned on, the CD will start playing where it stopped, if it was the last selected audio source.

The CD player can play the smaller 3 inch (8 cm) single CDs with an adapter ring. Full-size CDs and the smaller CDs are loaded in the same manner.

If playing a CD-R, the sound quality may be reduced due to CD-R quality, the method of recording, the quality of the music that has been recorded, and the way the CD-R has been handled. There may be an increase in skipping, difficulty in finding tracks, and/or difficulty in loading and ejecting. If these problems occur, check the bottom surface of the CD. If the surface of the CD is damaged, such as cracked, broken, or scratched, the CD will not play properly. If the surface of the CD is soiled, see “Cautions on Handling” for more information.

If there is no apparent damage, try a known good CD.

Do not add any label to a CD, it could get caught in the CD player. If a CD is recorded on a personal computer and a description label is needed, try labeling the top of the recorded CD with a marking pen instead.

CAUTION

If you add any label to a CD, insert more than one CD into the slot at a time, or attempt to play scratched or damaged CDs, you could damage the CD player. When using the CD player, use only CDs in good condition without any added label, load one CD at a time, and keep the CD player and the loading slot free of foreign materials, liquids, and debris.

If an error appears on the display, see “CD Messages” later in this section.

2 RPT (Repeat) button (5):
Press this button to repeat the current track. “RPT” will appear on the display. Press this button again to turn off repeat play.

3 RDM (Random) button (5):
Press this button to hear the tracks in random, rather than sequential, order. “RDM” will appear on the display. Press this button again to turn off random play.

4 INT (Scan) button (5):
Press this button to listen to the first few seconds of each track on each loaded CD. “INTRO” will appear on the display. To stop scanning, press this button again. The current track will begin to play.

TUNE (Previous/Next Track) button (3):
Press the down arrows to go to the start of the current track or press the up arrows to go to the next track. The track number will appear on the display. The player will continue moving backward or forward through the CD with each press of the up or down arrows.

AM/FM button (2):
Press this button to select the desired AM or FM band. The display will show the selection. The band changes as follows:

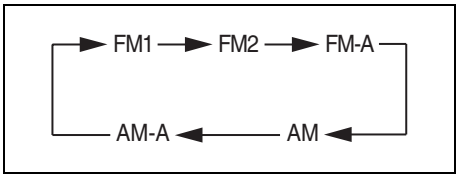

85Z016

CD button (9):
Press this button to play a CD when listening to the radio. “CDP” will appear on the

Downloaded from www.Manualslib.com manuals search engine

display when the CD player has been selected. The CD symbol will appear on the display when a CD is loaded.

Press this button while a CD is playing to pause the CD. “PAUSE” will flash on the display. Press this button again to resume playing the CD.

EJECT button (11):
Press this button to eject a CD. The only way a CD can be ejected from the player is by pressing the eject button. The CD can eject when the ignition or the radio is turned off.

Using an MP3 CD

MP3 Format
If you burn your own MP3/WMA disc on a personal computer:

- Make sure the MP3/WMA files are recorded on a CD-R disc.
- Do not mix standard audio and MP3/WMA files on one disc.
- Make sure each MP3/WMA file has a .mp3 or .wma extension, other file extensions may not work.
- Files can be recorded with a variety of fixed or variable bit rates. Song title, artist name, and album will be available for display by the radio when recorded using ID3 tags version 1 and 2.
- Create a folder structure that makes it easy to find songs while driving. Organize songs by albums using one folder for each album. Each folder or album should contain 18 songs or less.
- Make sure to finalize the disc when burning an MP3/WMA disc, using multiple sessions. It is usually better to burn the disc all at once.

The player will be able to read and play a maximum of 50 folders, 5 sessions, and 999 files. Long file names and folder names may use more disc memory space than necessary. To conserve space on the disc, minimize the length of the file and folder names. You can also play an MP3/WMA CD that was recorded using no file folders. The system can support up to 8 folders in depth, but keep the depth of the folders to a minimum in order to keep down the complexity and confusion in trying to locate a particular folder during playback. If a CD contains more than the maximum of 50 folders, 5 sessions, and 999 files the player will let you access and navigate up to the maximum, but all items over the maximum will be ignored.

Root Directory
The root directory will be treated as a folder. If the root directory has compressed audio files, the directory will be displayed as “ROOT”. All files contained directly under the root directory will be accessed prior to any other directory.

Empty Directory or Folder
If a root directory or a folder exists somewhere in the file structure that contains only folders/subfolders and no compressed files directly beneath them, the player will advance to the next folder in the file structure that contains compressed audio files and the empty folder will not be displayed or numbered.

No Folder
When the CD contains only compressed files, the files will be located under the root folder. The next and previous folder functions will not work on a CD that was recorded without folders or playlists. When displaying the name of the folder, the radio will display “ROOT”.

When the CD contains only compressed audio files, but no folders, all files will be located under the root folder. When the radio displays the name of the folder, the radio will display “ROOT”.

Order of Play
Tracks will be played in the following order:

- Playback will begin from the first track under the root directory.
- When all tracks from the root directory have been played, playback will continue from files, according to their numerical listing.
- After playing the last track from the last folder, the player will begin playing again at the first track of the first folder or root directory.

Downloaded from www.Manualslib.com manuals search engine

File System and Naming
The song name in the ID3 tag will be displayed. If the song name is not present in the ID3 tag, then the radio will display the file name without the extension (such as MP3/WMA) instead.

Track names longer than 32 characters or 4 pages will be shortened. The display will not show parts of words on the last page of text and the extension of the filename will not be displayed.

Playing an MP3/WMA
With the ignition on, insert a CD partway into the slot, label side up. The player will pull it in, “Loading”, then “Filecheck”, and then “MP3” or “WMA” will appear on the display. The CD should begin playing. You cannot insert a CD with the ignition switch in the “OFF” position.
As each new track starts to play, the track number, and the song name will appear on the display.
If the ignition or radio is turned off with a CD in the player, it will stay in the player. When a CD is in the player and the ignition is turned on, the radio must be turned on before the CD will start playback. When the ignition and radio are turned on, the CD will start playing where it stopped, if it was the last selected audio source.

The CD player can play the smaller 3 inch (8 cm) single CDs with an adapter ring. Full-size CDs and the smaller CDs are loaded in the same manner.

If playing a CD-R, the sound quality may be reduced due to CD-R quality, the method of recording, the quality of the music that has been recorded, and the way the CD-R has been handled. There may be an increase in skipping, difficulty in finding tracks, and/or difficulty in loading and ejecting. If these problems occur, check the bottom surface of the CD. If the surface of the CD is damaged, such as cracked, broken, or scratched, the CD will not play properly. If the surface of the CD is soiled, see “Cautions on Handling” for more information.

If there is no apparent damage, try a known good CD.

Do not add any label to a CD, it could get caught in the CD player. If a CD is recorded on a personal computer and a description label is needed, try labeling the top of the recorded CD with a marking pen instead.

CAUTION

If you add any label to a CD, insert more than one CD into the slot at a time, or attempt to play scratched or damaged CDs, you could damage the CD player. When using the CD player, use only CDs in good condition without any added label, load one CD at a time, and keep the CD player and the loading slot free of foreign materials, liquids, and debris.

If an error appears on the display, see “CD Messages” later in this section.

All of the CD functions work the same while playing an MP3/WMA, except for those listed here. See “PLAYING A CD” earlier for more information.

SOUND (SCROLL) button (6) (MP3/WMA mode only):
Press this button for longer than two seconds. The song title or other available information of a song will scroll on/off. The default is scroll on. The scroll mode can be changed only when this button is pressed for longer than two seconds.

DIR (Directory) button (12):
Press this button to repeat the tracks in the current directory. “DIR” will appear on the display.
Press this button again to repeat the tracks in all of the directories. “ALL” will appear on the display.
Press this button again to turn off repeat play.

SEEK (Previous/Next Folder) button (4) (in MP3/WMA mode):
Press the up or down arrows to change the folder. If the CD-R doesn’t have any folders, “ROOT” will flash on the display for a short time.

TUNE (Previous/Next Track) button (3):
Press the down arrows to go to the start of the current track or press the up arrows to go to the next track. The track number will

Downloaded from www.Manualslib.com manuals search engine

appear on the display. The player will continue moving backward or forward through the CD with each press of the up or down arrows.

INFO/DISP (Information/Display) button (13):
Press this button to display additional text information related to the current MP3/WMA song, such as: Song Title, Album Title, and Artist. Bit rate may also appear on display.

When information is not available, “No Info” will appear on the display.

Press this button for longer than two seconds to change display mode.

CD Messages

CHECK CD:
If this message appears on the display and/or the CD comes out, it could be for one of the following reasons:

- It is very hot. When the temperature returns to normal, the CD should play.
- You are driving on a very rough road. When the road becomes smoother, the CD should play.
- The CD is dirty, scratched, wet, or upside down.
- The air is very humid. If so, wait about an hour and try again.
- The format of the CD may not be compatible. See “MP3 Format” earlier in this section.
- There may have been a problem while burning the CD.
- The label may be caught in the CD player.

If the CD is not playing correctly, for any other reason, try a known good CD.

If any error occurs repeatedly or if an error cannot be corrected, contact your dealer. If the radio displays an error message, write it down and provide it to your dealer when reporting the problem.

AUDIO STEERING WHEEL CONTROLS

If your vehicle has this feature, you can control some functions of audio system using the buttons on your steering wheel.

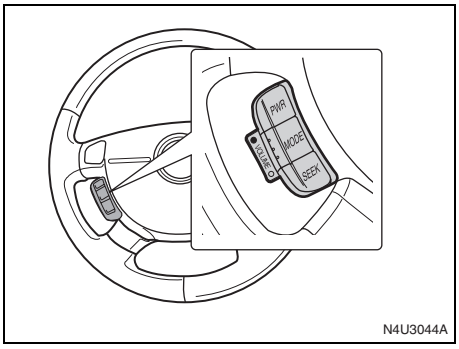

PWR button
Press this button to turn the audio system on/off.

MODE button
Press this button to select the desired mode.
The mode changes as follows;

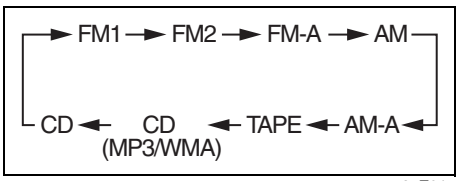

85Z017

Downloaded from www.Manualslib.com manuals search engine

VOLUME button
Press the "•" button to increase the volume and the "o" button to decrease the volume.

SEEK button

Mode	Short press *1	Long press *2
Radio	Next preset station	Next receivable station
Cassette	Forward AMS	Fast forward
CD	Next track	Fast forward

*1: Press and release the button within 0.5 seconds.
*2: Press and hold the button for longer than 0.5 seconds.

Radio and Tape with Six-Disc CD (Double Display, MP3/WMA) (AGX-5410JA)

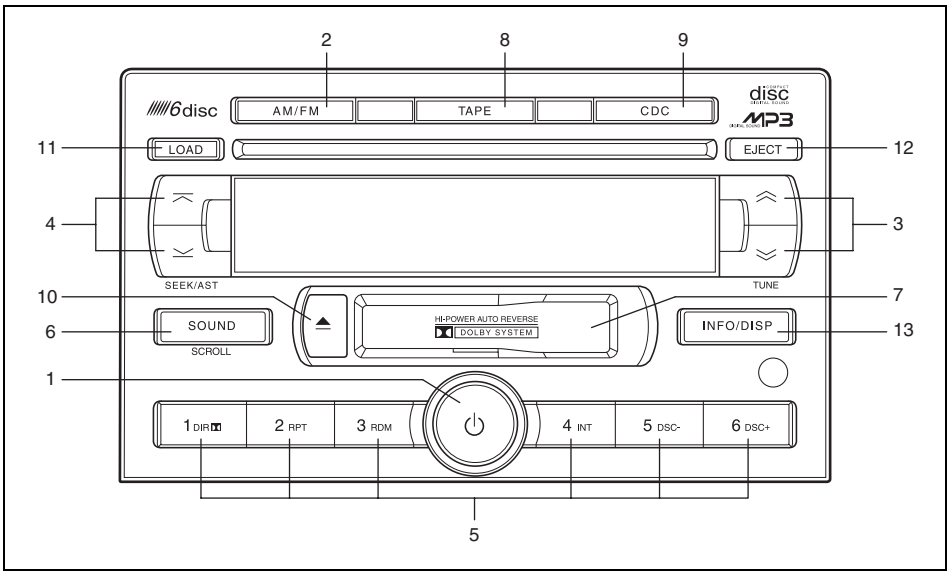

85Z014

1. Power/Volume knob
2. AM/FM button
3. TUNE button
4. SEEK/AST button
5. Preset station buttons
   - 1 DIR: Directory button
   - 2 RPT: Repeat button
   - 3 RDM: Random button
   - 4 INT: Introduction button
   - 5 DSC–: Previous CDC button
   - 6 DSC+: Next CDC button
6. SOUND button
7. Tape insert hole
8. TAPE button
9. CDC button
10. EJECT button (Tape)
11. LOAD button
12. EJECT button (CD)
13. INFO/DISP button

Downloaded from www.Manualslib.com manuals search engine

PLAYING THE RADIO

Power/Volume knob (1):
Press this knob to turn the system on and off.
Turn this knob clockwise or counterclockwise to increase or decrease the volume.
Press this button for longer than two seconds to mute the system.

Finding a Station

AM/FM button (2):
Press this button to select the desired AM or FM band. The display will show the selection.

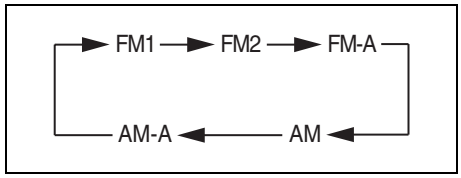

85Z016

TUNE button (3):
Press this button to select radio stations. (Manual tuning)

Press the up arrows to select higher frequency stations.
Press the down arrows to select lower frequency stations.

The frequency of the AM band changes 9 KHz each time and the frequency of the FM band changes 200 KHz each time.

SEEK/AST button (4):

Seek
Press this button to seek radio stations. (Seek tuning)

To search for the next receivable higher frequency station, press the up arrows.
To search for the next receivable lower station, press the down arrows.

Automatic Store
Press this button for longer than two seconds to use Automatic Store.
FM1's 6 preset stations with the strongest signal in the region can be automatically stored. Display will show "AUTO SCANNING". And "SCANNING" will flash on the display.

Stored stations will flash for a short time on the display in sequence. Once the stations are stored, the radio will switch to FM1 and the first preset station will begin to play. "FM-A" will appear on the display when listening to the automatically stored stations. Press the AM/FM button to cancel the automatic store function.

Preset station buttons (5):

Setting Preset Stations
Up to 18 stations (six FM1, six FM2, and six AM), can be programmed on the preset station buttons (5), by performing the following steps:

1) Turn the radio on.
2) Press the AM/FM button to select FM1, FM2, or AM.
3) Tune in the desired station.
4) Press and hold one of the preset station buttons for longer than two seconds.
   And the preset button number will flash on the display when the station has been set. Whenever that numbered preset button is pressed, the memorized station will be tuned in.
5) Repeat the previous four steps for each preset buttons.

Downloaded from www.Manualslib.com manuals search engine

SOUND BUTTON SCROLL ORDER
When you repeatedly press the SOUND button, the functions will scroll in the following order: BASS, TRE, BAL, FADE, EQ OFF, and VOL.

SOUND button (6):

Setting the Tone (Bass/Treble)
Press the SOUND button until “BAS” appears on the display. Turn the volume knob to increase or to decrease the bass. The display will show the bass level. When finished making the selection, press the SOUND button to select the bass level.

Press the SOUND button until “TRE” appears on the display. Turn the volume knob to increase or to decrease the treble. The display will show the treble level. When finished making the selection, press the SOUND button to select the treble level. If a station is weak or noisy, decrease the treble.

Adjusting the Speakers (Balance/Fade)
To adjust the balance between the right and the left speakers, press the SOUND button until “BAL” appears on the display. Turn the volume knob to shift the balance between the right and left speakers. The display will show the balance level. When finished making the selection, press the SOUND button to select the balance level.

To adjust the fade between the front and the rear speakers, press the SOUND button until “FAD” appears on the display. Turn the volume knob to shift the balance between the front and the rear speakers. The display will show the fade level. When finished making the selection, press the SOUND button to select the fade level.

Setting the Equalization
The scroll order for the customized equalization settings is EQ OFF, CLASSIC, DANCE, ROCK, JAZZ, POP, VOICE, TECHNO, EQ OFF.

Press the SOUND button until “EQ OFF” appears on the display to select customized equalization settings designed for classic, dance, rock, jazz, pop, voice and techno music. Turn the volume knob until the desired equalization setting appears on the display. When finished making the selection, press the SOUND button to select the equalization setting.

To cancel an equalization setting, press the SOUND button until “EQ OFF” appears on the display, turn the volume knob until “OFF” appears on the display, then press the SOUND button again.

PLAYING A TAPE
Insert a tape into the tape insert hole (7). You can see the message “LOAD” and “PLAY”.

1 DIR button (5):
Press this button to active the DOLBY function. The purpose of the DOLBY function is to delete tape noise.

2 RPT (Repeat) button (5):
Press this button to repeat the current track. “RPT” will appear on the display. Press this button again to turn off repeat play.

TUNE button (3):
Press the down arrows to go to rewind to the first track on the current side of the tape. “REW” will appear on the display. When the tape is fully rewound, it is played back from the beginning of the same side. To stop the rewind movement, press the TAPE button (8) or the down arrows button or the repeat button (5). The repeat button (5) is effective to only the case when the repeat function is not active.
Press the up arrows to advance to the first track on the opposite side of the tape. “FF” will appear on the display. When the tape reaches the end, it is automatically reversed and played back from the beginning of the opposite side. To stop the fast forward movement, press the TAPE button (8) or the up arrows button or the repeat button (5). The repeat button (5) is effec-

Downloaded from www.Manualslib.com manuals search engine

tive to only the case when the repeat function is not active.

SEEK/AST (Previous/Next Track) button (4):
Press the down arrows to go to the start of the current track or press the up arrows to go to the next track. “A-FF” or “A-REW” will appear on the display. The player will continue moving backward or forward through the TAPE with each press of the up or down arrows.

TAPE button (8):
Press this button to change the play direction. The tape player will change to forward or reverse direction.

AM/FM button (2):
Press this button to listen to the radio when a tape is playing. The inactive tape will remain safely inside the radio for future listening.

CDC button (9):
Press this button to play a CD when a tape is playing. “CDC” will appear on the display when the CD player has been selected. The CD symbol will appear on the display when a CD is loaded.

Press this button while a CD is playing to pause the CD. “PAUSE” will flash on the display. Press this button again to start playing the CD.

EJECT button (10):
Press this button to eject a tape.

PLAYING A CD(s)

LOAD button (11):
Press this button to load CDs into the CD player. This CD player will hold up to six CDs.

1) Press and release the load button.
2) You can see the message to select the slot.
3) And you select slot number (1~6).
4) Wait for the message to insert the disc.
5) Load a CD. Insert the CD partway into the slot, label side up. The player will pull the CD in.

To insert multiple CDs, do the following:

1) Press and hold the load button for two seconds. You will hear a beep and a message to load multiple discs will be displayed.
2) Follow the displayed instruction on to insert the discs. The CD player takes up to six CDs.
3) Press the LOAD button again to cancel loading more CDs.

As each CD is inserted, “CDP” will appear on the display and as each CD is loading, “Filecheck” will appear on the display.
Once playback begins, the track and track number will appear on the display.

If the ignition or radio is turned off with a CD in the player, it will stay in the player. When a CD is in the player and the ignition is turned on, the radio must be turned on before the current CD will start playback. When the ignition and radio are turned on, the CD will start playing where it stopped, if it was the last selected audio source.

The CD player can play the smaller 3 inch (8 cm) single CDs with an adapter ring. Full-size CDs and the smaller CDs are loaded in the same manner.

If playing a CD-R, the sound quality may be reduced due to CD-R quality, the method of recording, the quality of the music that has been recorded, and the way the CD-R has been handled. There may be increase in skipping, difficulty in finding tracks, and/or difficulty in loading and ejecting. If these problems occur, check the bottom surface of the CD. If the surface of the CD is damaged, such as cracked, broken, or scratched, the CD will not play properly. If the surface of the CD is soiled, see “Cautions on Handling” for more information.

If there is no apparent damage, try a known good CD.

Do not add any label to a CD, it could get caught in the CD player. If a CD is recorded on a personal computer and a description label is needed, try labeling the top of the recorded CD with a marking pen instead.

Downloaded from www.Manualslib.com manuals search engine

CAUTION

If you add any label to a CD, insert more than one CD into the slot at a time, or attempt to play scratched or damaged CDs, you could damage the CD player. When using the CD player, use only CDs in good condition without any added label, load one CD at a time, and keep the CD player and the loading slot free of foreign materials, liquids, and debris.

If an error appears on the display, see “CD Messages” later in this section.

2 RPT (Repeat) button (5):
Press this button to repeat the current track. “RPT” will appear on the display. Press this button again to turn off repeat play.

3 RDM (Random) button (5):
Press this button to hear the tracks in random, rather than sequential, order. “RDM” will appear on the display.

To play tracks from all CDs loaded in a six-disc CD player in random order, press this button until a message that all discs are randomized is displayed. Press the same button again to turn off random play.

4 INT (Scan) button (5):
Press this button to listen to the first few seconds of each track on each loaded CD. “INTRO” will appear on the display. To stop scanning, press this button again. The current track will begin to play.

5 DSC– (Previous CD) button (5):
Press this button to go back to the start of the previous CD.

6 DSC+ (Next CD) button (5):
Press this button to go forward to the start of the next CD.

TUNE (Previous/Next Track) button (3):
Press the down arrows to go to the start of the current track or press the up arrows to go to the next track. The track number will appear on the display. The player will continue moving backward or forward through the CD with each press of the up or down arrows.

AM button (2):
Press this button to listen to AM radio stations when a CD is playing. The inactive CD will remain safely inside the radio for future listening.

FM button (2):
Press this button to listen to FM radio stations when a CD is playing. The inactive CD will remain safely inside the radio for future listening.

CDC button (9):
Press this button to play a CD when listening to the radio. “CDP” will appear on the display when the CD player has been selected. The CD symbol will appear on the display when a CD is loaded.

Press this button while a CD is playing to pause the CD. “PAUSE” will flash on the display. Press this button again to resume playing the CD.

EJECT button (12):
Press this button to eject a CD. Press and hold this button to eject all CDs. The only way a CD can be ejected from the player is by pressing the eject button. The CD will can eject when the ignition or the radio is turned off.

Downloaded from www.Manualslib.com manuals search engine

Using an MP3/WMA CD

MP3/WMA Format

If you burn your own MP3/WMA disc on a personal computer:

- Make sure the MP3/WMA files are recorded on a CD-R disc.
- Make sure to finalize the disc when burning an MP3/WMA disc, using multiple sessions. It is usually better to burn the disc all at once.
- Files can be recorded with a variety of fixed or variable bit rates. Song title, artist name, and album will be available for display by the radio when recorded using ID3 tags version 1 and 2.
- Do not mix standard audio and MP3/WMA files on one disc.
- Make sure each MP3/WMA file has a .mp3 or .wma extension, other file extensions may not work.

The player will be able to read and play a maximum of 50 folders, 5 sessions, and 999 files. Long file names and folder names may use more disc memory space than necessary. To conserve space on the disc, minimize the length of the file and folder names. You can also play an MP3/WMA CD that was recorded using no file folders. The system can support up to 8 folders in depth, but keep the depth of the folders to a minimum in order to keep down the complexity and confusion in trying to locate a particular folder during playback. If a CD contains more than the maximum of 50 folders, 5 sessions, and 999 files the player will let you access and navigate up to the maximum, but all items over the maximum will be ignored.

Root Directory

The root directory will be treated as a folder. If the root directory has compressed audio files, the directory will be displayed as “ROOT”. All files contained directly under the root directory will be accessed prior to any other directory.

Empty Directory or Folder

If a root directory or a folder exists somewhere in the file structure that contains only folders/subfolders and no compressed files directly beneath them, the player will advance to the next folder in the file structure that contains compressed audio files and the empty folder will not be displayed or numbered.

No Folder

When the CD contains only compressed files, the files will be located under the root folder. The next and previous folder functions will not work on a CD that was recorded without folders or playlists. When displaying the name of the folder, the radio will display “ROOT”.

When the CD contains only compressed audio files, but no folders, all files will be located under the root folder. When the radio displays the name of the folder, the radio will display “ROOT”.

Order of Play

Tracks will be played in the following order:

- The player play will begin from the first track under the root directory.
- When all tracks from the root directory have been played, play will continue from files according to their numerical listing.
- After playing the last track from the last folder, the player will begin playing again at the first track of the first folder or root directory.

File System and Naming

The song name in the ID3 tag will be displayed. If the song name is not present in the ID3 tag, then the radio will display the file name without the extension (such as MP3/WMA) instead.

Track names longer than 32 characters or 4 pages will be shortened. The display will not show parts of words on the last page of text and the extension of the filename will not be displayed.

Playing an MP3/WMA

With the ignition on, insert a CD partway into the slot, label side up. The player will pull it in, “Loading”, then “Filecheck”, and then “MP3/WMA” will appear on the display. The CD should begin playing. You can’t insert a CD with the ignition off.

As each new track starts to play, the track number, and the song name will appear on the display.

Downloaded from www.Manualslib.com manuals search engine

If the ignition or radio is turned off with a CD in the player, it will stay in the player. When a CD is in the player and the ignition is turned on, the radio must be turned on before the CD will start playback. When the ignition and radio are turned on, the CD will start playing where it stopped, if it was the last selected audio source.

The CD player can play the smaller 3 inch (8 cm) single CDs with an adapter ring. Full-size CDs and the smaller CDs are loaded in the same manner.

If playing a CD-R, the sound quality may be reduced due to CD-R quality, the method of recording, the quality of the music that has been recorded, and the way the CD-R has been handled. There may be an increase in skipping, difficulty in finding tracks, and/or difficulty in loading and ejecting. If these problems occur, check the bottom surface of the CD. If the surface of the CD is damaged, such as cracked, broken, or scratched, the CD will not play properly. If the surface of the CD is soiled, see “Cautions on Handling” for more information.

If there is no apparent damage, try a known good CD.

Do not add any label to a CD, it could get caught in the CD player. If a CD is recorded on a personal computer and a description label is needed, try labeling the top of the recorded CD with a marking pen instead.

CAUTION

If you add any label to a CD, insert more than one CD into the slot at a time, or attempt to play scratched or damaged CDs, you could damage the CD player. When using the CD player, use only CDs in good condition without any added label, load one CD at a time, and keep the CD player and the loading slot free of foreign materials, liquids, and debris.

If an error appears on the display, see “CD Messages” later in this section.

All of the CD functions work the same while playing an MP3/WMA, except for those listed here. See “PLAYING A CD(s)” earlier for more information.

SOUND (SCROLL) button (6) (MP3/WMA mode only):
Press this button for longer than two seconds. Song title or other information of a song will scroll on/off. The default is scroll on. The scroll mode can be changed only when press this button for longer than two seconds

1 DIR (Directory) button (5):
Press this button to repeat the tracks in the current directory. “DIR” will appear on the display.
Press this button again to repeat the tracks in all of the directories. “ALL” will appear on the display.

Press this button again to turn off repeat play.

SEEK (Previous/Next Folder) button (4) (in MP3/WMA mode):
Press the up or down arrows to change the folder. If the CD-R doesn’t have any folders, “ROOT” will flash on the display for a short time.

TUNE (Previous/Next File) button (3):
Press the up or down arrows to go to the first track in the previous or to go to the next folder. The player will continue moving backward or forward through the CD with each press of the up or down arrows.

INFO/DISP (Information/Display) button (13):
Press this button to display additional text information related to the current MP3/WMA song, such as: Song Title, Album Title, Artist, Bit rate may appear.

While information is not available, “No Info” will appear on the display.

Press this button for longer than two seconds to change display mode.

Downloaded from www.Manualslib.com manuals search engine

CD Messages

CHECK CD:
If this message appears on the display and/or the CD comes out, it could be for one of the following reasons:

- It is very hot. When the temperature returns to normal, the CD should play.
- You are driving on a very rough road. When the road becomes smoother, the CD should play.
- The CD is dirty, scratched, wet, or upside down.
- The air is very humid. If so, wait about an hour and try again.
- The format of the CD may not be compatible. See “MP3/WMA Format” earlier in this section.
- There may have been a problem while burning the CD.
- The label may be caught in the CD player.

If the CD is not playing correctly, for any other reason, try a known good CD.
If any error occurs repeatedly or if an error cannot be corrected, contact your dealer. If the radio displays an error message, write it down and provide it to your dealer when reporting the problem.

AUDIO STEERING WHEEL CONTROLS

If your vehicle has this feature, you can control some functions of audio system using the buttons on your steering wheel.

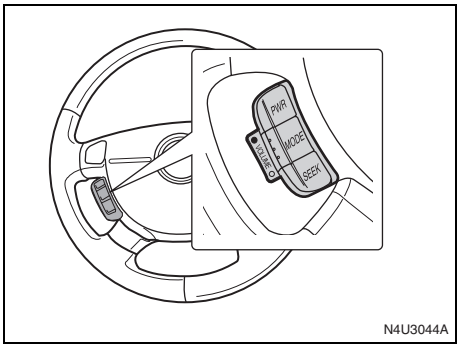

PWR button
Press this button to turn the audio system on/off.

MODE button
Press this button to select the desired mode.
The mode changes as follows;

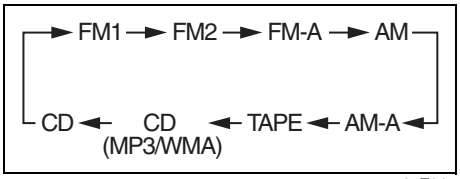

85Z017

VOLUME button
Press the “•” button to increase the volume and the “o” button to decrease the volume.

SEEK button

Mode	Short press *1	Long press *2
Radio	Next preset station	Next receivable station
Cassette	Forward AMS	Fast forward
CD	Next track	Fast forward

*1: Press and release the button within 0.5 seconds.
*2: Press and hold the button for longer than 0.5 seconds.

Downloaded from www.Manualslib.com manuals search engine

CD CHANGER OPERATION (Optional)

CD changer is installed in the boot.

Up to 6 discs can be stored in the magazine of CD changer.

A selection of tracks from the 6 discs stored in the disc magazine can be made and automatically played in the order of your preference.

NOTE:
- *The CD changer is controlled by the Main Unit.*
- *The CD changer is an Optional Item.*

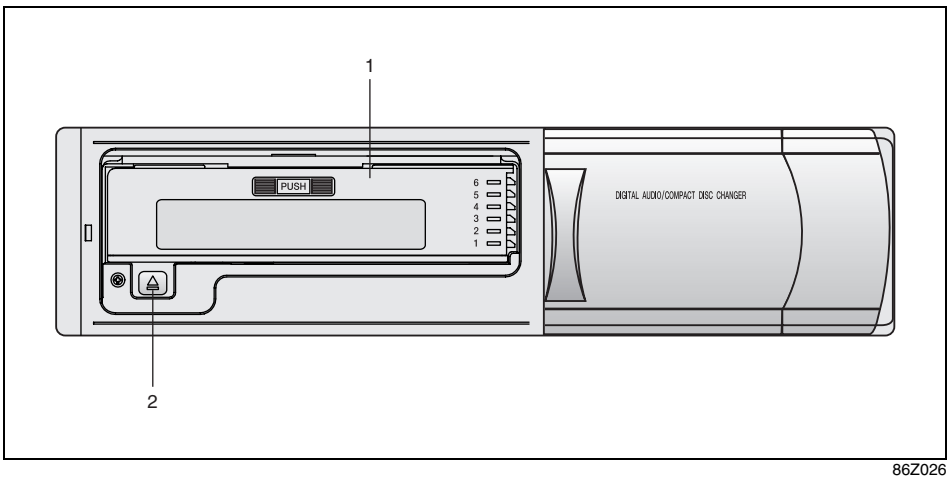

86Z026

1. Magazine slot
2. Magazine eject button

Downloaded from www.Manualslib.com manuals search engine

How to Change Discs

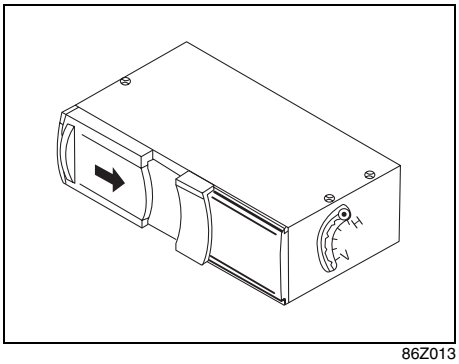

86Z013

To remove:

1) Open the sliding door of the CD changer to the right until it is completely latched.

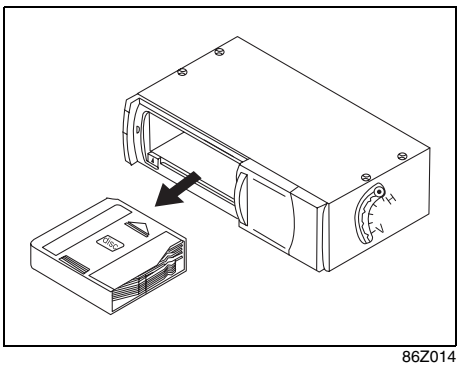

86Z014

2) Press the eject button on the CD changer and remove the magazine.

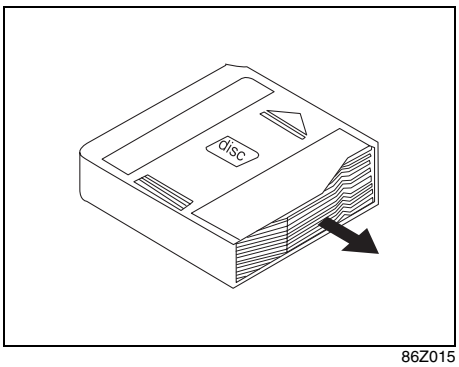

86Z015

3) Pull a tray out of the magazine by pressing the tray button.
4) Remove the disc from the tray and reinsert the tray into the magazine.

Downloaded from www.Manualslib.com manuals search engine

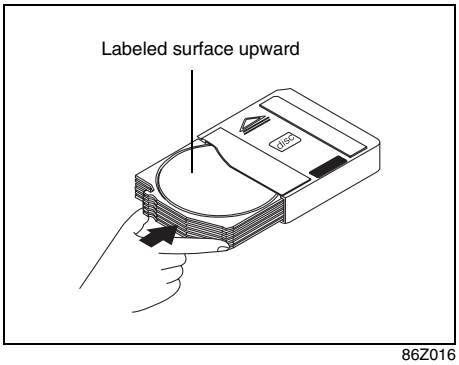

86Z016

To load:
1) Put the disc on a tray with its label side upward.
2) Insert the tray into the magazine.
3) Push the magazine into the CD changer until it is locked and a click sound is heard.
4) After loading the magazine, close the sliding door completely to the left.

CD changer is operated by main unit.

1) Press the power button on the main unit to turn the audio system on.
2) If a disc is already inserted inside the CD changer, press the "CD" button. Playback starts at the beginning of the track that you were previously listening to.
3) If a disc is not inserted yet, load a disc in the magazine. (Refer to "How to change discs".)
   Then, press the "CD" button to play. Playback starts from the No. 1 disc.

CD Changer Play:
To play the CD Changer while operating the radio, press the "CD" button if a disc is already inserted in the CD changer.

The mode is transferred to the CD changer and the CD is played back from the track that you were previously listening to.

If a disc is not in the CD changer, the mode is not changed to the CD changer when you press this button.

Track Up & Down:
The track up & down knob/button allows you to make quick selections from your playing disc.

1) To play the next track, rotate this knob clockwise less than 1 second or press the track up button once. Each time you rotate the knob or press the button, the disc will skip to the next track.
2) To play the previous track, rotate this knob counterclockwise less than 1 second or press the track down button once. Each time you rotate the knob or press the button, the disc will skip to the previous track.

Cue & Review:
This function allows desired point-search within a track at a faster than normal playback speed.

1) To search for the desired point of a track, rotate this knob and hold it or press and hold the track up/down button. The audio level is reduced and the disc will play at a faster than normal playback speed. When the disc reaches the desired point, release the knob/button and normal play will resume.
2) To cue (forward) the track, rotate this knob clockwise or press the track up button. To review (backward) the track, rotate this knob counterclockwise or press the track down button.

Repeat Play:
To repeatedly listen to the current track, press the "2/RPT" button.
"RPT" is displayed in VFD and the current track will be played back repeatedly until this function is canceled.
To cancel this function, press this button once again.

Downloaded from www.Manualslib.com manuals search engine

Track Introduction:
To quickly and conveniently scan the track, use the “3 or 4/INT” button.
“INTRO” will be displayed in VFD and the audio system will play the first 10 seconds of each track.
When the player reaches the desired track, press this button again and normal play will resume.

Random Play:
To play a CD disc in random order, press the “4 or 5/RDM” button.
“RDM” will be displayed in VFD and the audio system will play the CD in random order.
To cancel this function, press this button once again.

Disc Up / Down Button
To select another disc in ascending order, press the “3 or 6/UP” button. The number of the selected disc will appear on the VFD.
To select another disc in descending order, press the “5 or 6/DN” button. The number of the selected disc will appear on the VFD.

Downloaded from www.Manualslib.com manuals search engine

MEMO

Downloaded from www.Manualslib.com manuals search engine

DRIVING YOUR VEHICLE

Your Driving, the Road, and Your Vehicle 4-1
Towing 4-16

Downloaded from www.Manualslib.com manuals search engine

Your Driving, the Road, and Your Vehicle

Defensive Driving

The best advice anyone can give about driving is: Drive defensively.

Please start by using a very important safety device in your vehicle: Your safety belt. Buckle up. See "Safety Belts: They Are for Everyone" in section 1.

Defensive driving really means "be ready for anything." On city streets, rural roads or freeways, it means "always expect the unexpected."

Assume that pedestrians or other drivers are going to be careless and make mistakes. Anticipate what they might do. Be ready for their mistakes.

Rear-end collisions are about the most preventable of accidents. Yet they are common. Allow enough following distance. It's the best defensive driving maneuver, in both city and rural driving. You never know when the vehicle in front of you is going to brake or turn suddenly.

Defensive driving requires that a driver concentrate on the driving task. Anything that distracts from the driving task – such as concentrating on a cellular telephone call, reading, or reaching for something on the floor – makes proper defensive driving more difficult and can even cause a collision, with resulting injury. Ask a passenger to help do things like this, or pull off the road in a safe place to do them yourself. These simple defensive driving techniques could save your life.

Drunken Driving

Death and injury associated with drinking and driving is a national tragedy. It's the number one contributor to the highway death toll, claiming thousands of victims every year.

Alcohol affects four things that everyone needs to drive a vehicle:

- Judgment
- Muscular Coordination
- Vision
- Attentiveness.

Police records show that almost half of all motor vehicle-related deaths involve alcohol. In most cases, these deaths are the result of someone who was drinking and driving. In recent years, more than 16,000 annual motor vehicle-related deaths have been associated with the use of alcohol, with more than 300,000 people injured.

Many adults – by some estimates, nearly half the adult population – choose never to drink alcohol, so they never drive after drinking. For persons under 21, it is against the law in every U.S. state to drink alcohol. There are good medical, psychological and developmental reasons for these laws.

The obvious way to eliminate the leading highway safety problem is for people never to drink alcohol and then drive. But what if people do? How much is "too much" if someone plans to drive? It's a lot less than many might think. Although it depends on each person and situation, here is some general information on the problem.

The Blood Alcohol Concentration (BAC) of someone who is drinking depends upon four things:

- The amount of alcohol consumed
- The drinker's body weight
- The amount of food that is consumed before and during drinking
- The length of time it has taken the drinker to consume the alcohol.

According to the American Medical Association, a 180 lb (82 kg) person who drinks three 12 ounce (355 ml) bottles of beer in an hour will end up with a BAC of about 0.06 percent. The person would reach the same BAC by drinking three 4 ounce (120 ml) glasses of wine or three mixed drinks if each had 1-1/2 ounces (45 ml) of liquors like whiskey, gin or vodka.

Downloaded from www.Manualslib.com manuals search engine

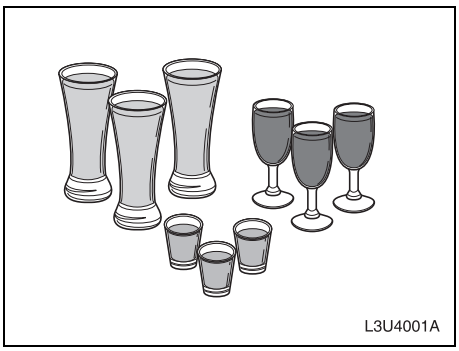

It's the amount of alcohol that counts. For example, if the same person drank three double martinis (3 ounces or 90 ml of liquor each) within an hour, the person's BAC would be close to 0.12 percent. A person who consumes food just before or during drinking will have a somewhat lower BAC level.

There is a gender difference, too. Women generally have a lower relative percentage of body water than men. Since alcohol is carried in body water, this means that a woman generally will reach a higher BAC level than a man of her same body weight will when each has the same number of drinks.

The law in an increasing number of U.S. states, and throughout Canada, sets the legal limit at 0.08 percent. In some other countries, the limit is even lower. For example, it is 0.05 percent in both France and Germany. The BAC limit for all commercial drivers in the United States is 0.04 percent.

The BAC will be over 0.10 percent after three to six drinks (in one hour). Of course, as we've seen, it depends on how much alcohol is in the drinks, and how quickly the person drinks them.

But the ability to drive is affected well below a BAC of 0.10 percent. Research shows that the driving skills of many people are impaired at a BAC approaching 0.05 percent, and that the effects are worse at night. All drivers are impaired at BAC levels above 0.05 percent. Statistics show that the chance of being in a collision increases sharply for drivers who have a BAC of 0.05 percent or above. A driver with a BAC level of 0.06 percent has doubled his or her chance of having a collision. At a BAC level of 0.10 percent, the chance of this driver having a collision is 12 times greater; at a level of 0.15 percent, the chance is 25 times greater!

The body takes about an hour to rid itself of the alcohol in one drink. No amount of coffee or number of cold showers will speed that up. "I'll be careful" isn't the right answer. What if there's an emergency, a need to take sudden action, as when a child darts into the street? A person with even a moderate BAC might not be able to react quickly enough to avoid the collision.

There's something else about drinking and driving that many people don't know. Medical research shows that alcohol in a person's system can make crash injuries worse, especially injuries to the brain, spinal cord or heart. This means that when anyone who has been drinking – driver or passenger – is in a crash, that person's chance of being killed or permanently disabled is higher than if the person had not been drinking.

⚠ WARNING

Drinking and then driving is very dangerous. Your reflexes, perceptions, attentiveness and judgment can be affected by even a small amount of alcohol. You can have a serious – or even fatal – collision if you drive after drinking. Please don't drink and drive or ride with a driver who has been drinking. Ride home in a cab; or if you're with a group, designate a driver who will not drink.

Control of a Vehicle

You have three systems that make your vehicle go where you want it to go. They are the brakes, the steering and the accelerator. All three systems have to do their work at the places where the tires meet the road.

Downloaded from www.Manualslib.com manuals search engine

DRIVING YOUR VEHICLE

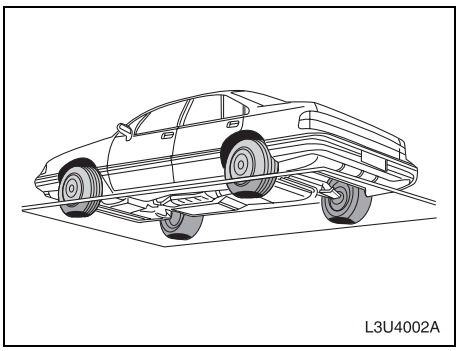

Sometimes, as when you're driving on snow or ice, it's easy to ask more of those control systems than the tires and road can provide. That means you can lose control of your vehicle.

Braking

Braking action involves perception time and reaction time.

First, you have to decide to push on the brake pedal. That's perception time. Then you have to bring up your foot and do it. That's reaction time.

Average reaction time is about 3/4 of a second. But that's only an average. It might be less with one driver and as long as two or three seconds or more with another. Age, physical condition, alertness, coordination and eyesight all play a part. So do alcohol, drugs and frustration.

But even in 3/4 of a second, a vehicle moving at 60 mph (100 km/h) travels 66 feet (20 m). That could be a lot of distance in an emergency, so keeping enough space between your vehicle and others is important.

And, of course, actual stopping distances vary greatly with the surface of the road (whether it's pavement or gravel) the condition of the road (wet, dry, icy) tire tread the condition of your brakes the weight of the vehicle and the amount of brake force applied.

Avoid needless heavy braking. Some people drive in spurts – heavy acceleration followed by heavy braking – rather than keeping pace with traffic. This is a mistake. Your brakes may not have time to cool between hard stops. Your brakes will wear out much faster if you do a lot of heavy braking. If you keep pace with the traffic and allow realistic following distances, you will eliminate a lot of unnecessary braking. That means better braking and longer brake life.

If your engine ever stops while you're driving, brake normally but don't pump your brakes. If you do, the pedal may get harder to push down. If your engine stops, you will still have some power brake assist. But you will use it when you brake. Once the power assist is used up, it may take longer to stop and the brake pedal will be harder to push.

Anti-Lock Brake System (ABS) (if equipped)

ABS is an advanced electronic braking system that will help prevent a braking skid.

When you start your engine and begin to drive away, your anti-lock brake system will check itself. You may hear a momentary motor or clicking noise while this test is going on, and you may even notice that your brake pedal moves a little. This is normal.

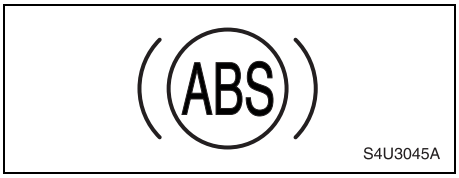

If there's a problem with the anti-lock brake system, this warning light will stay on. See "Anti-Lock Brake System Warning Light" in section 3.

Downloaded from www.Manualslib.com manuals search engine

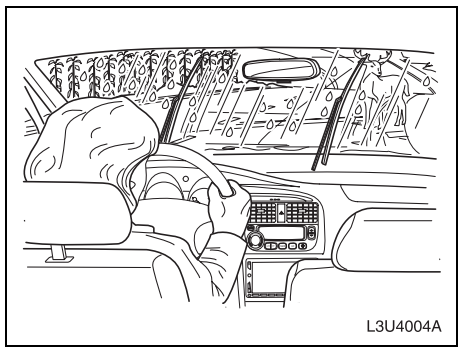

Let's say the road is wet and you're driving safely. Suddenly, an animal jumps out in front of you. You slam on the brakes and continue braking. Here's what happens with ABS:

A computer senses that wheels are slowing down. If one of the wheels is about to stop rolling, the computer will separately work the brakes at each front wheel and at both rear wheels.

The anti-lock system can change the brake pressure faster than any driver could. The computer is programmed to make the most of available tire and road conditions. This can help you steer around the obstacle while braking hard.

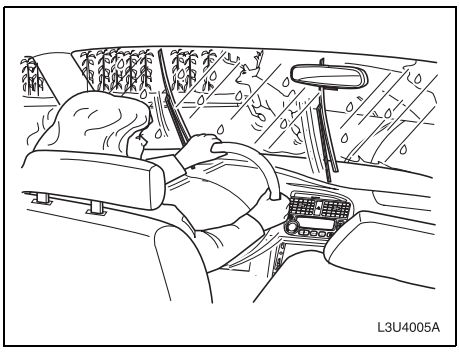

As you brake, your computer keeps receiving updates on wheel speed and controls braking pressure accordingly.

Remember: Anti-lock doesn't change the time you need to get your foot up to the brake pedal or always decrease stopping distance. If you get too close to the vehicle in front of you, you won't have time to apply your brakes if that vehicle suddenly slows or stops. Always leave enough room up ahead to stop, even though you have anti-lock brakes.

Using Anti-Lock

Don't pump the brakes. Just hold the brake pedal down firmly and let anti-lock work for you. You may hear the anti-lock pump or motor operate, and feel the brake pedal pulsate, but this is normal.

Braking in Emergencies

At some time, nearly every driver gets into a situation that requires hard braking.

If you have anti-lock, you can steer and brake at the same time. However, if you don't have anti-lock, your first reaction – to hit the brake pedal hard and hold it down – may be the wrong thing to do. Your wheels can stop rolling. Once they do, the vehicle can't respond to your steering. Momentum will carry it in whatever direction it was headed when the wheels stopped rolling. That could be off the road, into the very thing you were trying to avoid, or into traffic.

If you don't have anti-lock, use a "squeeze" braking technique. This will give you maximum braking while maintaining steering control. You can do this by pushing on the brake pedal with steadily increasing pressure. In an emergency, you will probably want to squeeze the brakes hard without locking the wheels. If you hear or feel the wheels sliding, ease off the brake pedal. This will help you retain steering control. If you do have anti-lock, it's different. See "Anti-Lock Brake System" in this section.

In many emergencies, steering can help you more than even the very best braking.

Downloaded from www.Manualslib.com manuals search engine

DRIVING YOUR VEHICLE

Steering

Power Steering
If you lose power steering assist because the engine stops or the system is not functioning, you can steer but it will take much more effort.

Speed Sensitive Power Steering System
This system continuously adjusts the effort you feel when steering at all vehicle speeds. It provides ease when parking, yet a firm, solid feel at highway speeds.

If your vehicle has this system, it varies the amount of effort required to steer the vehicle in relation to the speed of the vehicle.

The amount of steering effort required is less at slower speeds to make the vehicle more maneuverable and easier to park. At faster speeds, the steering effort increases to provide a sport-like feel to the steering. This provides maximum control and stability.

This warning light will stay on, or come on while you are driving, if there's a problem with the SSPS system.

When this warning light is on, your vehicle will seem harder to steer than normal when parking or driving slowly. You will still have power steering, but steering will be stiffer than normal at slow speeds. See your dealer for service.

Steering Tips

Driving on Curves
It's important to take curves at a reasonable speed.

A lot of the "driver lost control" accidents mentioned on the news happen on curves. Here's why:

Experienced driver or beginner, each of us is subject to the same laws of physics when driving on curves. The traction of the tires against the road surface makes it possible for the vehicle to change its path when you turn the front wheels. If there's no traction, inertia will keep the vehicle going in the same direction. If you've ever tried to steer a vehicle on wet ice, you'll understand this.

The traction you can get in a curve depends on the condition of your tires and the road surface, the angle at which the curve is banked, and your speed. While you're in a curve, speed is the one factor you can control.

Suppose you're steering through a sharp curve. Then you suddenly apply the brakes. Both control systems – steering and braking – have to do their work where the tires meet the road. Unless you have four-wheel anti-lock brakes, adding the hard braking can demand too much of those places. You can lose control.

The same thing can happen if you're steering through a sharp curve and you suddenly accelerate. Those two control systems – steering and acceleration – can overwhelm those places where the tires meet the road and make you lose control.

What should you do if this ever happens? Ease up on the brake or accelerator pedal, steer the vehicle the way you want it to go, and slow down.

Speed limit signs near curves warn that you should adjust your speed. Of course, the posted speeds are based on good weather and road conditions. Under less favorable conditions you'll want to go slower.

If you need to reduce your speed as you approach a curve, do it before you enter the curve, while your front wheels are straight ahead.

Try to adjust your speed so you can "drive" through the curve. Maintain a reasonable, steady speed. Wait to accelerate until you are out of the curve, and then accelerate gently into the straightaway.

Downloaded from www.Manualslib.com manuals search engine

Steering in Emergencies
There are times when steering can be more effective than braking. For example, you come over a hill and find a truck stopped in your lane, or a car suddenly pulls out from nowhere, or a child darts out from between parked cars and stops right in front of you. You can avoid these problems by braking – if you can stop in time. But sometimes you can't; there isn't room. That's the time for evasive action – steering around the problem.

Your vehicle can perform very well in emergencies like these. First apply your brakes but, unless you have anti-lock, not enough to lock your wheels.

See "Braking" in this section. It is better to remove as much speed as you can from a possible collision. Then steer around the problem, to the left or right depending on the space available.

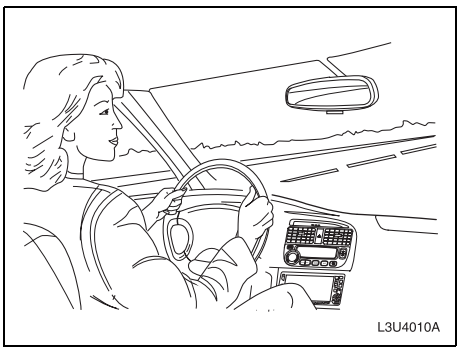

An emergency like this requires close attention and a quick decision. If you are holding the steering wheel at the recommended 9 and 3 o'clock positions, you can turn it a full 180 degrees very quickly without removing either hand. But you have to act fast, steer quickly, and just as quickly straighten the wheel once you have avoided the object.

The fact that such emergency situations are always possible is a good reason to practice defensive driving at all times and wear safety belts properly.

Off-Road Recovery
You may find that your right wheels have dropped off the edge of a road onto the shoulder while you're driving.

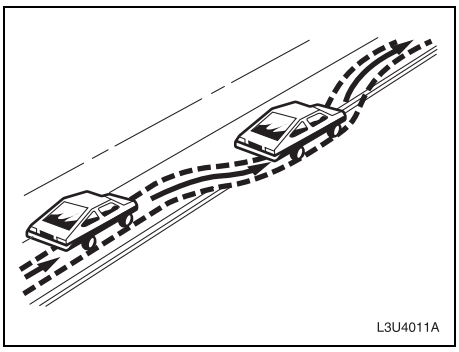

If the level of the shoulder is only slightly below the pavement, recovery should be fairly easy. Ease off the accelerator and then, if there is nothing in the way, steer so that your vehicle straddles the edge of the pavement. You can turn the steering wheel up to one-quarter turn until the right front tire contacts the pavement edge. Then turn your steering wheel to go straight down the roadway.

Passing
The driver of a vehicle about to pass another on a two-lane highway waits for just the right moment, accelerates, moves around the vehicle ahead, then goes back into the right lane again. A simple maneuver?

Not necessarily! Passing another vehicle on a two-lane highway is a potentially dan-

Downloaded from www.Manualslib.com manuals search engine

DRIVING YOUR VEHICLE

gerous move, since the passing vehicle occupies the same lane as oncoming traffic for several seconds. A miscalculation, an error in judgment, or a brief surrender to frustration or anger can suddenly put the passing driver face to face with the worst of all traffic accidents – the head-on collision.

So here are some tips for passing:

- "Drive ahead." Look down the road, to the sides and to crossroads for situations that might affect your passing patterns. If you have any doubt whatsoever about making a successful pass, wait for a better time.
- Watch for traffic signs, pavement markings and lines. If you can see a sign up ahead that might indicate a turn or an intersection, delay your pass. A broken center line usually indicates it's all right to pass (providing the road ahead is clear). Never cross a solid line on your side of the lane or a double solid line, even if the road seems empty of approaching traffic.
- Do not get too close to the vehicle you want to pass while you're awaiting an opportunity. For one thing, following too closely reduces your area of vision, especially if you're following a larger vehicle. Also, you won't have adequate space if the vehicle ahead suddenly slows or stops. Keep back a reasonable distance.
- When it looks like a chance to pass is coming up, start to accelerate but stay in the right lane and don't get too close. Time your move so you will be increasing speed as the time comes to move into the other lane. If the way is clear to pass, you will have a "running start" that more than makes up for the distance you would lose by dropping back. And if something happens to cause you to cancel your pass, you need only slow down and drop back again and wait for another opportunity.
- If other vehicles are lined up to pass a slow vehicle, wait your turn. But take care that someone isn't trying to pass you as you pull out to pass the slow vehicle. Remember to glance over your shoulder and check the blind spot.
- Check your mirrors, glance over your shoulder, and start your left lane change signal before moving out of the right lane to pass. When you are far enough ahead of the passed vehicle to see its front in your inside mirror, activate your right lane change signal and move back into the right lane. (Remember that your right outside mirror is convex. The vehicle you just passed may seem to be farther away from you than it really is.)
- Try not to pass more than one vehicle at a time on two-lane roads. Reconsider before passing the next vehicle.
- Don't overtake a slowly moving vehicle too rapidly. Even though the brake lamps are not flashing, it may be slowing down or starting to turn.
- If you're being passed, make it easy for the following driver to get ahead of you. Perhaps you can ease a little to the right.

Loss of Control

Let's review what driving experts say about what happens when the three control systems (brakes, steering and acceleration) don't have enough friction where the tires meet the road to do what the driver has asked.

In any emergency, don't give up. Keep trying to steer and constantly seek an escape route or area of less danger.

Skidding

In a skid, a driver can lose control of the vehicle. Defensive drivers avoid most skids by taking reasonable care suited to existing conditions, and by not "overdriving" those conditions. But skids are always possible.

The three types of skids correspond to your vehicle's three control systems. In the braking skid, your wheels aren't rolling. In the steering or cornering skid, too much speed or steering in a curve causes tires to slip and lose cornering force. And in the acceleration skid, too much throttle causes the driving wheels to spin.

A cornering skid is best handled by easing your foot off the accelerator pedal.

Downloaded from www.Manualslib.com manuals search engine

If your vehicle starts to slide, ease your foot off the accelerator pedal and quickly steer the way you want the vehicle to go. If you start steering quickly enough, your vehicle may straighten out. Always be ready for a second skid if it occurs.

Of course, traction is reduced when water, snow, ice, gravel or other material is on the road. For safety, you'll want to slow down and adjust your driving to these conditions. It is important to slow down on slippery surfaces because stopping distance will be longer and vehicle control more limited.

While driving on a surface with reduced traction, try your best to avoid sudden steering, acceleration or braking (including engine braking by shifting to a lower gear). Any sudden changes could cause the tires to slide. You may not realize the surface is slippery until your vehicle is skidding. Learn to recognize warning clues – such as enough water, ice or packed snow on the road to make a "mirrored surface" – and slow down when you have any doubt.

If you have the anti-lock braking system, remember: It helps avoid only the braking skid. If you do not have anti-lock, then in a braking skid (where the wheels are no longer rolling), release enough pressure on the brakes to get the wheels rolling again. This restores steering control. Push the brake pedal down steadily when you have to stop suddenly. As long as the wheels are rolling, you will have steering control.

Driving at Night

N4U4001A

Night driving is more dangerous than day driving. One reason is that some drivers are likely to be impaired – by alcohol or drugs, with night vision problems, or by fatigue.

Here are some tips on night driving.

- Drive defensively.
- Don't drink and drive.
- Adjust your inside rearview mirror to reduce the glare from headlamps behind you.
- Since you can't see as well, you may need to slow down and keep more space between you and other vehicles.
- Slow down, especially on higher speed roads. Your headlamps can light up only so much road ahead.
- In remote areas, watch for animals.
- If you're tired, pull off the road in a safe place and rest.

No one can see as well at night as in the daytime. But as we get older these differences increase. A 50-year-old driver may require at least twice as much light to see the same thing at night as a 20-year-old.

What you do in the daytime can also affect your night vision. For example, if you spend the day in bright sunshine you are wise to wear sunglasses. Your eyes will have less trouble adjusting to night. But if you're driving, don't wear sunglasses at night. They may cut down on glare from headlamps, but they also make a lot of things invisible.

You can be temporarily blinded by approaching headlamps. It can take a second or two, or even several seconds, for your eyes to readjust to the dark. When you are faced with severe glare (as from a driver who doesn't lower the high beams, or a vehicle with misaimed headlamps), slow down a little. Avoid staring directly into the approaching headlamps.

Keep your windshield and all the glass on your vehicle clean – inside and out. Glare at night is made much worse by dirt on the glass. Even the inside of the glass can build up a film caused by dust. Dirty glass

Downloaded from www.Manualslib.com manuals search engine

DRIVING YOUR VEHICLE

makes lights dazzle and flash more than clean glass would, making the pupils of your eyes contract repeatedly.

Remember that your headlamps light up far less of a roadway when you are in a turn or curve. Keep your eyes moving; that way, it's easier to pick out dimly lighted objects. Just as your headlamps should be checked regularly for proper aim, so should your eyes be examined regularly. Some drivers suffer from night blindness – the inability to see in dim light – and aren't even aware of it.

Driving in Rain and on Wet Roads

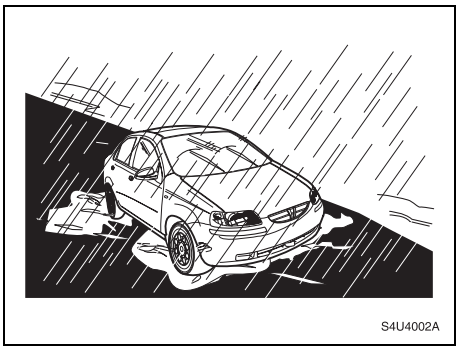
S4U4002A

Rain and wet roads can mean driving trouble. On a wet road, you can't stop, accelerate or turn as well because your tire-to-road traction isn't as good as on dry roads. And, if your tires don't have much tread left, you'll get even less traction. It's always wise to go slower and be cautious if rain starts to fall while you are driving. The surface may get wet suddenly when your reflexes are tuned for driving on dry pavement.

The heavier the rain, the harder it is to see. Even if your windshield wiper blades are in good shape, a heavy rain can make it harder to see road signs and traffic signals, pavement markings, the edge of the road and even people walking.

It's wise to keep your windshield wiping equipment in good shape and keep your windshield washer tank filled with washer fluid. Replace your windshield wiper inserts when they show signs of streaking or missing areas on the windshield, or when strips of rubber start to separate from the inserts.

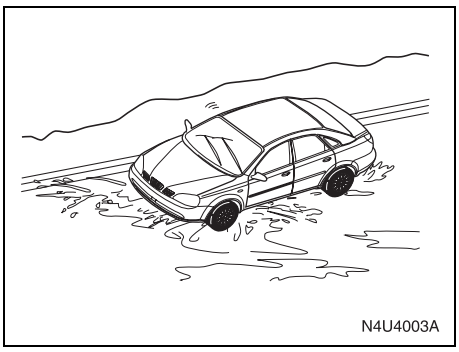
N4U4003A

Driving too fast through large water puddles or even going through some car washes can cause problems, too. The water may affect your brakes. Try to avoid puddles. But if you can't, try to slow down before you hit them.

⚠ WARNING

Wet brakes can cause accidents. They won't work as well in a quick stop and may cause pulling to one side. You could lose control of the vehicle.
After driving through a large puddle of water or a car wash, apply your brake pedal lightly until your brakes work normally.

Downloaded from www.Manualslib.com manuals search engine

Hydroplaning

Hydroplaning is dangerous. So much water can build up under your tires that they can actually ride on the water. This can happen if the road is wet enough and you're going fast enough. When your vehicle is hydroplaning, it has little or no contact with the road.

Hydroplaning doesn't happen often. But it can if your tires do not have much tread or if the pressure in one or more is low. It can happen if a lot of water is standing on the road. If you can see reflections from trees, telephone poles or other vehicles, and raindrops "dimple" the water's surface, there could be the possibility of hydroplaning.

Hydroplaning usually happens at higher speeds. There just isn't a hard and fast rule about hydroplaning. The best advice is to slow down when it is raining.

Driving Through Deep Standing Water

CAUTION

If you drive too quickly through deep puddles or standing water, water can come in through your engine's air intake and badly damage your engine. Never drive through water that is slightly lower than the underbody of your vehicle. If you can't avoid deep puddles or standing water, drive through them very slowly.

Driving Trough Flowing Water

⚠ WARNING

Flowing or rushing water creates strong forces. If you try to drive through flowing water, as you might at a low water crossing, your vehicle can be carried away. As little as six inches of flowing water can carry away a smaller vehicle. If this happens, you and other vehicle occupants could drown. Don't ignore police warning signs, and otherwise be very cautious about trying to drive through flowing water.

Some Other Rainy Weather Tips

- Besides slowing down, allow some extra following distance. And be especially careful when you pass another vehicle. Allow yourself more clear room ahead, and be prepared to have your view restricted by road spray.
- Have good tires with proper tread depth. See "Tires" in section 5.

City Driving

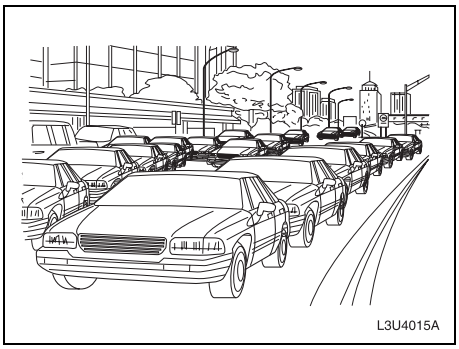

One of the biggest problems with city streets is the amount of traffic on them. You'll want to watch out for what the other drivers are doing and pay attention to traffic signals.

Here are ways to increase your safety in city driving:

- Know the best way to get to where you are going. Get a city map and plan your trip into an unknown part of the city just as you would for a cross-country trip.
- Try to use the freeways that rim and crisscross most large cities. You'll save

Downloaded from www.Manualslib.com manuals search engine

DRIVING YOUR VEHICLE

time and energy. See the next part, "Freeway Driving."

- Treat a green light as a warning signal. A traffic light is there because the corner is busy enough to need it. When a light turns green, and just before you start to move, check both ways for vehicles that have not cleared the intersection or may be running the red light.

Freeway Driving

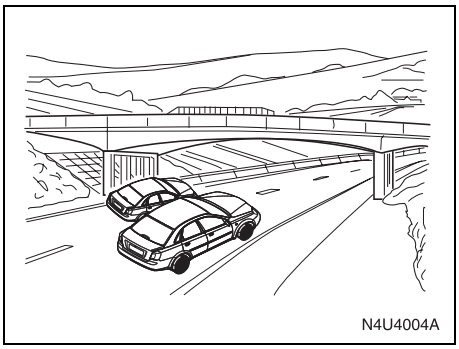

Mile for mile, freeways (also called thruways, parkways, expressways, turnpikes or superhighways) are the safest of all roads. But they have their own special rules.

The most important advice on freeway driving is: Keep up with traffic and keep to the right. Drive at the same speed most of the other drivers are driving. Too-fast or too-slow driving breaks a smooth traffic flow. Treat the left lane on a freeway as a passing lane.

At the entrance, there is usually a ramp that leads to the freeway. If you have a clear view of the freeway as you drive along the entrance ramp, you should begin to check traffic. Try to determine where you expect to blend with the flow. Try to merge into the gap at close to the prevailing speed. Switch on your turn signal, check your mirrors and glance over your shoulder as often as necessary. Try to blend smoothly with the traffic flow.

Once you are on the freeway, adjust your speed to the posted limit or to the prevailing rate if it's slower. Stay in the right lane unless you want to pass.

Before changing lanes, check your mirrors. Then use your turn signal.

Just before you leave the lane, glance quickly over your shoulder to make sure there isn't another vehicle in your "blind" spot.

Once you are moving on the freeway, make certain you allow a reasonable following distance.

Expect to move slightly slower at night.

When you want to leave the freeway, move to the proper lane well in advance. If you miss your exit, do not, under any circumstances, stop and back up. Drive on to the next exit.

The exit ramp can be curved, sometimes quite sharply. The exit speed is usually posted. Reduce your speed according to your speedometer, not to your sense of motion. After driving for any distance at higher speeds, you may tend to think you are going slower than you actually are.

Before Leaving on a Long Trip

Make sure you're ready. Try to be well rested. If you must start when you're not fresh – such as after a day's work – don't plan to make too many miles that first part of the journey. Wear comfortable clothing and shoes you can easily drive in.

Is your vehicle ready for a long trip? If you keep it serviced and maintained, it's ready to go. If it needs service, have it done before starting out. Of course, you'll find experienced and able service experts in SUZUKI dealerships all across North America. They'll be ready and willing to help if you need it.

Here are some things you can check before a trip:

- Windshield Washer Fluid: Is the reservoir full? Are all windows clean inside and outside?
- Wiper Blades: Are they in good shape?
- Fuel, Engine Oil, Other Fluids: Have you checked all levels?

Downloaded from www.Manualslib.com manuals search engine

- Lamps: Are they all working? Are the lenses clean?
- Tires: They are vitally important to a safe, trouble-free trip. Is the tread good enough for long-distance driving? Are the tires all inflated to the recommended pressure?
- Weather Forecasts: What's the weather outlook along your route? Should you delay your trip a short time to avoid a major storm system?
- Maps: Do you have up-to-date maps?

Highway Hypnosis

Is there actually such a condition as "highway hypnosis"? Or is it just plain falling asleep at the wheel? Call it highway hypnosis, lack of awareness, or whatever.

There is something about an easy stretch of road with the same scenery, along with the hum of the tires on the road, the drone of the engine, and the rush of the wind against the vehicle that can make you sleepy. Don't let it happen to you! If it does, your vehicle can leave the road in less than a second, and you could crash and be injured.

What can you do about highway hypnosis? First, be aware that it can happen.

Then here are some tips:

- Make sure your vehicle is well ventilated, with a comfortably cool interior.
- Keep your eyes moving. Scan the road ahead and to the sides. Check your rear-view mirrors and your instruments frequently.
- If you get sleepy, pull off the road into a rest, service or parking area and take a nap, get some exercise, or both. For safety, treat drowsiness on the highway as an emergency.

Hill and Mountain Roads

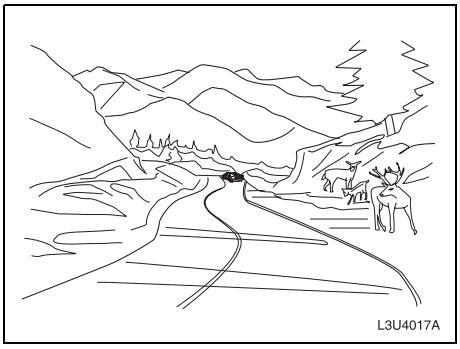

Driving on steep hills or mountains is different from driving in flat or rolling terrain.

If you drive regularly in steep country, or if you're planning to visit there, here are some tips that can make your trips safer and more enjoyable.

- Keep your vehicle in good shape. Check all fluid levels and also the brakes, tires, cooling system and transmission. These parts can work hard on mountain roads.
- Know how to go down hills. The most important thing to know is this: let your engine do some of the slowing down. Shift to a lower gear when you go down a steep or long hill.

⚠ WARNING

If you don't shift down, your brakes could get so hot that they wouldn't work well. You would then have poor braking or even none going down a hill. You could crash. Shift down to let your engine assist your brakes on a steep downhill slope.

⚠ WARNING

Coasting downhill in NEUTRAL (N) or with the ignition off is dangerous. Your brakes will have to do all the work of slowing you down. They could get so hot that they wouldn't work well. You would then have poor braking or even none going down a hill. You could crash. Always have your engine running and your vehicle in gear when you go downhill.

- Know how to go uphill. You may want to shift down to a lower gear. The lower gears help cool your engine and transmission, and you can climb the hill better.
- Stay in your own lane when driving on two-lane roads in hills or mountains.

Downloaded from www.Manualslib.com manuals search engine

DRIVING YOUR VEHICLE

Don't swing wide or cut across the center of the road. Drive at speeds that let you stay in your own lane.

- As you go over the top of a hill, be alert. There could be something in your lane, like a stalled car or an accident.
- You may see highway signs on mountains that warn of special problems. Examples are long grades, passing or no-passing zones, a falling rocks area or winding roads. Be alert to these and take appropriate action.

Winter Driving

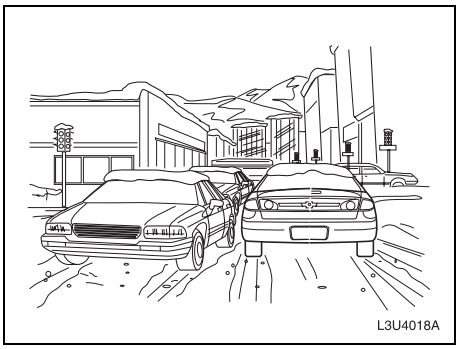
L3U4018A

Here are some tips for winter driving:

- Have your vehicle in good shape for winter.
- You may want to put winter emergency supplies in your trunk.

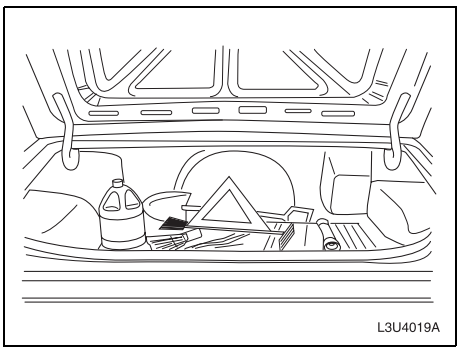
L3U4019A

Include an ice scraper, a small brush or broom, a supply of windshield washer fluid, a rag, some winter outer clothing, a small shovel, a flashlight, a red cloth and a couple of reflective warning triangles. And, if you will be driving under severe conditions, include a small bag of sand, a piece of old carpet or a couple of burlap bags to help provide traction. Be sure you properly secure these items in your vehicle.

Driving on Snow or Ice

Most of the time, those places where your tires meet the road probably have good traction.

However, if there is snow or ice between your tires and the road, you can have a very slippery situation. You'll have a lot less traction or "grip" and will need to be very careful.

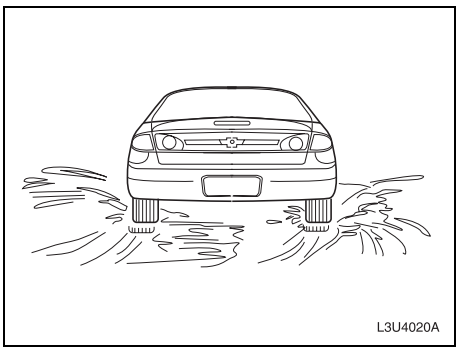
L3U4020A

Very cold snow or ice can be slick and hard to drive on. But wet ice can be even more trouble because it may offer the least traction of all. You can get wet ice when it's about freezing (32°F; 0°C) and freezing rain begins to fall. Try to avoid driving on wet ice until salt and sand crews can get there.

Whatever the condition – smooth ice, packed, blowing or loose snow – drive with caution.

Accelerate gently. Try not to break the fragile traction. If you accelerate too fast, the drive wheels will spin and polish the surface under the tires even more.

Unless you have an anti-lock braking system, you'll want to brake very gently, too. (If you do have anti-lock, see "Braking" in this section. This system improves your

Downloaded from www.Manualslib.com manuals search engine

vehicle's stability when you make a hard stop on a slippery road.) Whether you have an anti-lock braking system or not, you'll want to begin stopping sooner than you would on dry pavement. Without anti-lock brakes, if you feel your vehicle begin to slide, let up on the brakes a little. Push the brake pedal down steadily to get the most traction you can.

Remember, unless you have anti-lock, if you brake so hard that your wheels stop rolling, you'll just slide. Brake so your wheels always keep rolling and you can still steer.

- Whatever your braking system, allow greater following distance on any slippery road.
- Watch for slippery spots. The road might be fine until you hit a spot that's covered with ice. On an otherwise clear road, ice patches may appear in shaded areas where the sun can't reach: around clumps of trees, behind buildings or under bridges. Sometimes the surface of a curve or an overpass may remain icy when the surrounding roads are clear. If you see a patch of ice ahead of you, brake before you are on it. Try not to brake while you're actually on the ice, and avoid sudden steering maneuvers.

If You're Caught in a Blizzard

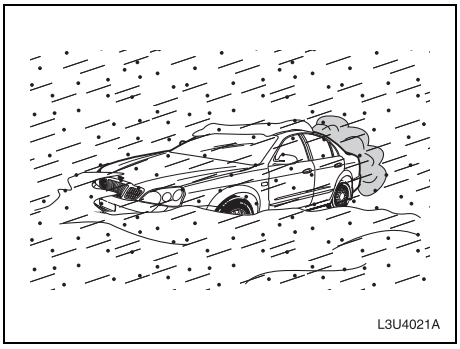

If you are stopped by heavy snow, you could be in a serious situation. You should probably stay with your vehicle unless you know for sure that you are near help and you can hike through the snow. Here are some things to do to summon help and keep yourself and your passengers safe:

- Turn on your hazard flashers.
- Tie a red cloth to your vehicle to alert police that you've been stopped by the snow.
- Put on extra clothing or wrap a blanket around you. If you have no blankets or extra clothing, make body insulators from newspapers, burlap bags, rags, floor mats – anything you can wrap around yourself or tuck under your clothing to keep warm.

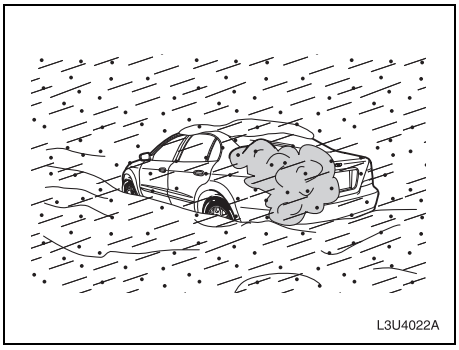

You can run the engine to keep warm, but be careful.

⚠ WARNING

Snow can trap exhaust gases under your vehicle. This can cause deadly CO (carbon monoxide) gas to get inside. CO could overcome you and kill you. You can't see it or smell it, so you might not know it is in your vehicle. Clear away snow from around the base of your vehicle, especially any that is blocking your exhaust pipe. And check around again from time to time to be sure snow doesn't collect there.
Open a window just a little on the side of the vehicle that's away from the wind. This will help keep CO out.

Downloaded from www.Manualslib.com manuals search engine

DRIVING YOUR VEHICLE

Run your engine only as long as you must. This saves fuel. When you run the engine, make it go a little faster than just idle. That is, push the accelerator slightly. This uses less fuel for the heat that you get and it keeps the battery charged. You will need a well-charged battery to restart the vehicle, and possibly for signaling later on with your headlamps. Let the heater run for a while.

Then, shut the engine off and close the window almost all the way to preserve the heat. Start the engine again and repeat this only when you feel really uncomfortable from the cold. But do it as little as possible. Preserve the fuel as long as you can. To help keep warm, you can get out of the vehicle and do some fairly vigorous exercises every half hour or so until help comes.

If You Are Stuck: In Sand, Mud, Ice or Snow

In order to free your vehicle when it is stuck, you will need to spin the wheels, but you don't want to spin your wheels too fast. The method known as "rocking" can help you get out when you're stuck, but you must use caution.

⚠ WARNING

If you let your tires spin at high speed, they can explode, and you or others could be injured. And, the transmission or other parts of the vehicle can overheat. That could cause an engine compartment fire or other damage. When you're stuck, spin the wheels as little as possible. Don't spin the wheels above 35 mph (55 km/h) as shown on the speedometer.

CAUTION

Spinning your wheels can destroy parts of your vehicle as well as the tires. If you spin the wheels too fast while shifting your transmission back and forth, you can destroy your transmission. See "Rocking Your Vehicle To Get It Out."

For information about using tire chains on your vehicle, see "Tire Chains" in section 5.

Rocking Your Vehicle To Get It Out

First, turn your steering wheel left and right. That will clear the area around your front wheels. Then shift back and forth between REVERSE (R) and a forward gear (or with a manual transmission, between FIRST (1) or SECOND (2) and REVERSE (R)), spinning the wheels as little as possible. Release the accelerator pedal while you shift, and press lightly on the accelerator pedal when the transmission is in gear. By slowly spinning your wheels in the forward and reverse directions, you will cause a rocking motion that may free your vehicle. If that doesn't get you out after a few tries, you may need to be towed out. If you do need to be towed out, see "Towing Your Vehicle" in the following section.

Downloaded from www.Manualslib.com manuals search engine

Towing

Towing Your Vehicle

Consult your dealer or a professional towing service if you need to have your disabled vehicle towed.

If you want to tow your vehicle behind another vehicle for recreational purposes (such as behind a motorhome), see the following section, “Recreational Vehicle Towing”.

⚠ WARNING

Always use a safety chain when towing your vehicle and be sure to observe federal, state, and local requirement for trailer hitches, tow bars, lights, etc.

Recreational Vehicle Towing

Recreational vehicle towing means towing your vehicle behind another vehicle – such as behind a motorhome. The two most common types of recreational vehicle towing are known as “dinghy towing” (towing your vehicle with all four wheels on the ground) and “dolly towing” (towing your vehicle with two wheels on the ground and two wheels up on a device known as a “dolly”).

With the proper preparation and equipment, many vehicles can be towed in these ways. See the following sections, “Dinghy Towing” and “Dolly Towing”.

Here are some important things to consider before you do recreational vehicle towing:

- What’s the towing capacity of the towing vehicle? Be sure you read the tow vehicle manufacturer’s recommendations.
- How far will you tow? Some vehicles have restrictions on how far and how long they can tow.
- Do you have the proper towing equipment? See your dealer or trailering professional for additional advice and equipment recommendations.
- Is your vehicle ready to be towed? Just as you would prepare your vehicle for a long trip, you’ll want to make sure your vehicle is prepared to be towed. See “Before Leaving on a Long Trip” in this section.

Dinghy Towing

CAUTION

Towing your vehicle with all four wheels on the ground will damage drivetrain components. The repairs would not be covered by your warranty.

Your vehicle was not designed to be towed with all four wheels on the ground. If your vehicle must be towed, you should use a dolly. See “Dolly Towing” that follows for more information.

Dolly Towing

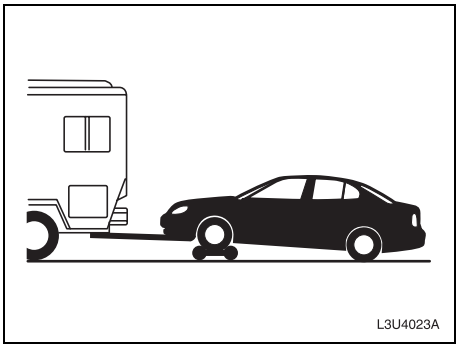

CAUTION

Do not tow the vehicle from the rear with the front wheels on the road. This could cause severe transmission damage.

Your vehicle can be towed using a dolly. To tow your vehicle using a dolly, follow these steps:

1) Put the front wheels on the dolly.
2) Put the vehicle in PARK(P) for automatic transaxle and NEUTRAL for manual transaxle.
3) Set the parking brake and then remove the iqnition key.
4) For a vehicle with an automatic transaxle, remove the hole cover from the shift lock release slot, insert the key,

Downloaded from www.Manualslib.com manuals search engine

and shift to NEUTRAL (N). See “Shifting Out of Park (P)” in Section 2.

5) Clamp the steering wheel in a straight-ahead position with a clamping device designed for towing.
6) Release the parking brake.

Loading Your Vehicle

It is very important to know how much weight your vehicle can carry. The load capacities of your vehicle are indicated by the Gross Vehicle Weight Rating (GVWR), the Gross Axle Weight Rating (GAWR, front and rear), the total load capacity, the seating capacity, and the cargo load capacity. The GVWR and GAWR (front and rear) are listed on the Safety Certification Label which is located below the driver’s side door latch striker. The total load capacity and seating capacity are listed on the Tire and Loading Information Label which is located on the center pillar, near the driver’s door latch.

The Tire and Loading Information label also gives you the size and recommended inflation pressure for the factory installed, original equipment tires on your vehicle. For more information on tires and inflation, see “Tires” in section 5.

Tire and Loading Information Label

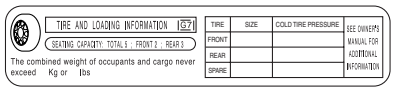

N6U4001A

Certification Label

N4U4008A

The cargo load capacity can be determined as described below.

Cargo Load Capacity – Maximum weight of cargo and luggage that the vehicle can safely carry. Cargo load capacity is the difference between the total load capacity of the vehicle and the total combined weight of all vehicle occupants. Refer to “Steps for Determining Correct Load Limit” for details on how to determine cargo load capacity.

GVWR – Maximum permissible overall weight of the fully loaded vehicle (including all the occupants, accessories and cargo plus the trailer tongue weight if towing a trailer).

GAWR – (Front and Rear) Maximum permissible weight on an individual axle.

Seating Capacity – Maximum number of occupants the vehicle is designed to carry.

NOTE:
Even though the number of occupants is within the seating capacity, you still must make sure that you do not exceed the total load capacity of the vehicle.

Total Load Capacity – Maximum permissible weight a vehicle can carry including the weight of all the occupants, accessories and cargo.

The weight of any accessories already installed on your vehicle at the time of purchase, or that you or the dealer install after purchase, must be subtracted from the total load capacity to determine how much capacity remains available for occupants and cargo. Contact your dealer for further information.

Downloaded from www.Manualslib.com manuals search engine

Towing:

Actual weight of the loaded vehicle and actual loads at the front and rear axles can only be determined by weighing the vehicle using a vehicle scale. To measure the weight and load, try taking your vehicle to a highway weighing station, shipping company or inspection station for trucks, etc. Compare these weights to the GVWR and GAWR (front and rear) listed on the Safety Certification Label. If the gross vehicle weight or the load on either axle exceeds these ratings, you must remove enough weight to bring the load down to the rated capacity.

Steps for Determining Correct Load Limit

1) Locate the statement "The combined weight of occupants and cargo should never exceed XXX pounds" on your vehicle placard.
2) Determine the combined weight of the driver and passengers that will be riding in your vehicle.
3) Subtract the combined weight of the driver and passengers from XXX kilograms or XXX pounds.
4) The resulting figure equals the available amount of cargo and luggage load capacity. For example, if the "XXX" amounts equals 1,400 lbs and there will be five 150 lb passengers in your vehicle, the amount of available cargo and luggage load capacity is 650 lbs (1,400 – 750 (5 x 150) = 650 lbs).
5) Determine the combined weight of luggage and cargo being loaded on the vehicle. That weight may not safely exceed the available cargo and luggage load capacity calculated in Step 4.

Vehicle Loading Example

As an example, suppose that the Tire and Loading Information label on your vehicle indicates that your vehicle's total load capacity is 950 lbs. If you were to drive your vehicle with one passenger, and the total combined weight of you and your passenger was 350 lbs, then the cargo and luggage capacity of your vehicle would be 600 lbs (950 – 350 = 600 lbs).

If you later added 2 more passengers, having a combined weight of 325 lbs, the cargo and luggage capacity of your vehicle would be reduced from 600 lbs to 275 lbs (600 – 325 = 275 lbs). As you can see, as the number and combined weight of vehicle occupants increase, the vehicle's cargo and luggage capacity decreases.

⚠ WARNING

Never overload your vehicle. Overloading your vehicle can cause damage to your tires and lead to poor steering and braking which can result in an accident. The gross vehicle weight (sum of the weights of the loaded vehicle, driver and passengers) must never exceed the Gross Vehicle Weight Rating (GVWR) listed on the Safety Certification Label. In addition, never distribute a load so that the weight on either the front or rear axle exceeds the Gross Axle Weight Rating (GAWR) listed on the Safety Certification Label.

If you put things inside your vehicle – like suitcases, tools, packages, or anything else – they will go as fast as the vehicle goes. If you have to stop or turn quickly, or if there is a crash, they'll keep going.

Downloaded from www.Manualslib.com manuals search engine

⚠ WARNING

Things you put inside your vehicle can strike and injure people in a sudden stop or turn, or in a crash.

- **Put things in the trunk or rear area of your vehicle. In a trunk, put them as far forward as you can. Try to spread the weight evenly. If you have fold-down rear seats, you'll find four anchors on the back wall of your trunk. You can use these anchors to tie down lighter loads. They're not strong enough for heavy things, however, so put them as far forward as you can in the trunk or rear area.**
- **Never stack heavier things, like suitcases, inside the vehicle so that some of them are above the tops of the seats.**
- **Don't leave an unsecured child restraint in your vehicle.**
- **When you carry something inside the vehicle, secure it whenever you can.**
- **Don't leave a seat folded down unless you need to.**

Determining Compatibility of Tire and Vehicle Load Limits

The tires on your vehicle, when they are inflated to the recommended tire inflation pressure, have a load-carrying capacity that is greater than the load that will be on the tires when the vehicle is at its GVWR or GAWR limit. Never use replacement tires that have a load-carrying capacity less than the original tires on your vehicle. Tire load-carrying capacity information is molded into the tire sidewall typically shown as "Max. Load". Use of replacement tires with a lower load-carrying capacity than the original tires, or failure to keep the tires inflated to recommended tire pressure, may reduce the GVWR or GAWR limit of your vehicle.

NOTE:
Use of replacement tires with a higher load-carrying capacity than the original tires, or using a tire inflation pressure higher than the recommended tire inflation pressure, will not increase the GVWR or GAWR limit of your vehicle.

Towing a Trailer

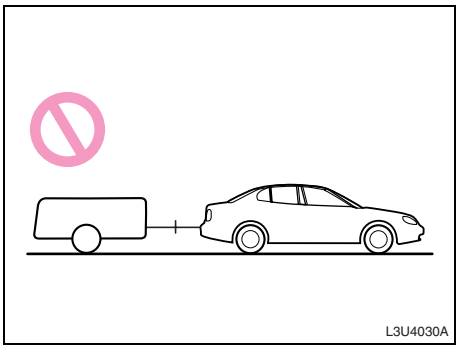

Do not use your vehicle to tow a trailer. The vehicle is not designed or intended for such use. Towing a trailer can adversely affect handling, durability and fuel economy.

Downloaded from www.Manualslib.com manuals search engine

SERVICE AND APPEARANCE CARE

Service 5-1
Fuel 5-1
Checking Things Under the Hood 5-4
Headlamp Aiming 5-23
Bulb Replacement 5-23
Windshield Wiper Blade Replacement 5-27
Tires 5-28
Appearance Care 5-42
Vehicle Identification 5-46
Electrical System 5-46
Capacities and Specifications 5-51

Downloaded from www.Manualslib.com manuals search engine

SERVICE AND APPEARANCE CARE

Service

Your dealer knows your vehicle best and wants you to be happy with it. We hope you'll go to your dealer for all your service needs. You'll get genuine SUZUKI parts and SUZUKI trained and supported service people.

We hope you'll want to keep your SUZUKI vehicle all SUZUKI.

Doing Your Own Service Work

Your vehicle has an air bag system. Before attempting to do your own service work, see "Servicing Your Air Bag-Equipped Vehicle" in section 1.

You should keep a record with all parts receipts and list the mileage and the date of any service work you perform. See "Maintenance Record" in section 6.

⚠ WARNING

You can be injured and your vehicle could be damaged if you try to do service work on a vehicle without knowing enough about it.

- **Be sure you have sufficient knowledge, experience, the proper replacement parts and tools before you attempt any vehicle maintenance task.**
- **Be sure to use the proper nuts, bolts and other fasteners. "English" and "metric" fasteners can be easily confused. If you use the wrong fasteners, parts can later break or fall off. You could be hurt.**

Adding Equipment to the Outside of Your Vehicle

Things you might add to the outside of your vehicle can affect the airflow around it. This may cause wind noise and affect windshield washer performance. Check with your dealer before adding equipment to the outside of your vehicle.

Fuel

Use of the recommended fuel is an important part of the proper maintenance of your vehicle.

Gasoline Octane

Use only unleaded gasoline with a posted octane rating of 87 or higher. In an emergency, you may be able to use a lower octane rating – as low as 85 – if heavy knocking does not occur. Refill your tank with proper fuel as soon as possible. Otherwise, you might damage your engine. If you are using 87 or higher-octane rating fuel and you hear heavy knocking, your engine needs service.

California Fuel

If your vehicle is certified to meet California Emission Standards (see the underhood emission control label), it is designed to operate on fuels that meet California specifications. If this fuel is not available in states adopting California emissions standards, your vehicle will operate satisfactorily on fuels meeting federal specifications, but emission control system performance may be affected. The malfunction indicator lamp may turn on (see Malfunction Indicator Lamp in section 3) and your vehicle may fail a smog-check test. If this occurs, return to your dealer for diagnosis.

Downloaded from www.Manualslib.com manuals search engine

Additives

To provide cleaner air, all gasolines in the United States are now required to contain additives that will help prevent engine and fuel system deposits from forming, allowing your emission control system to work properly. You should not have to add anything to your fuel. However, some gasolines contain only the minimum amount of additive required to meet U.S. Environmental Protection Agency regulations. SUZUKI recommends that you buy gasolines that are advertised to help keep fuel injectors and intake valves clean. If your vehicle experiences problems due to dirty injectors or valves, try a different brand of gasoline.

Gasoline containing oxygenates, such as ethers and ethanol, and reformulated gasolines may be available in your area to contribute to clean air. SUZUKI recommends that you use these gasolines.

CAUTION

Your vehicle was not designed for fuel that contains methanol. Don't use fuel containing methanol. It can corrode metal parts in your fuel system and also damage the plastic and rubber parts. That damage wouldn't be covered under your warranty.

Some gasolines that are not reformulated for low emissions may contain an octane-enhancing additive called methylcyclopentadienyl manganese tricarbonyl (MMT); ask the attendant where you buy gasoline whether the fuel contains MMT. SUZUKI does not recommend the use of such gasolines. Fuels containing MMT can reduce the life of spark plugs and the performance of the emission control system may be affected. The malfunction indicator lamp may turn on. If this occurs, return to your dealer for service.

Fuels in Foreign Countries

If you plan on driving in another country outside the United States or Canada, the proper fuel may be hard to find. Never use leaded gasoline or any other fuel not recommended in the previous text on fuel. Costly repairs caused by use of improper fuel wouldn't be covered by your warranty.

To check the fuel availability, ask an auto club, or contact a major oil company that does business in the country where you'll be driving.

Filling Your Tank

⚠ WARNING

Fuel vapor burns violently and a fuel fire can cause severe injuries. To help avoid injuries to you and others, read and follow all the instructions on the pump island. Turn off your engine when you are refueling. Don't smoke if you're near fuel or are refueling your vehicle. Keep sparks, flames and smoking materials away from fuel. Don't leave the fuel pump unattended when refueling your vehicle – this is against the law in some places. Keep children away from the fuel pump; never let children pump fuel.

Downloaded from www.Manualslib.com manuals search engine

SERVICE AND APPEARANCE CARE

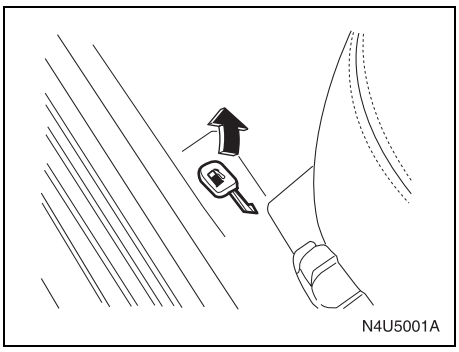

To open the fuel filler door, pull up on the fuel filler door release lever located on the floor to the left of the driver's seat.

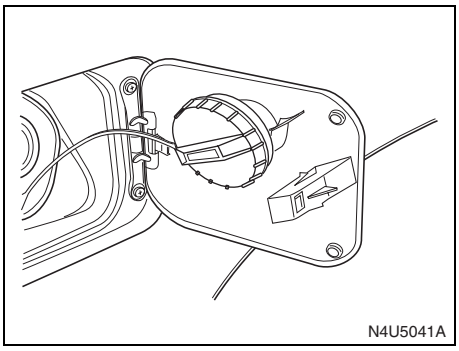

The fuel cap is located on the passenger's side of your vehicle.

While refueling, hang the tethered cap inside the fuel door.

To remove the fuel cap, turn it slowly to the left (counterclockwise).

⚠ WARNING

If you spill fuel and then something ignites it, you could be badly burned. Fuel can spray out on you if you open the fuel cap too quickly. This spray can happen if your tank is nearly full, and is more likely in hot weather. Open the fuel cap slowly and wait for any "hiss" noise to stop. Then unscrew the cap all the way.

Be careful not to spill fuel. Don't top off or overfill your tank, and wait a few seconds after you've finished pumping before you remove the nozzle. Clean fuel from painted surfaces as soon as possible. See "Cleaning the Outside of Your Vehicle" in this section.

When you put the fuel cap back on, turn it to the right (clockwise) until you hear a clicking sound. Make sure you fully install the cap. The diagnostic system can determine if the fuel cap has been left off or is improperly installed. This would allow fuel to evaporate into the atmosphere. See "Malfunction Indicator Lamp" in section 3.

⚠ WARNING

If a fire starts while you're refueling, don't remove the nozzle. Shut off the flow of fuel by shutting off the pump or by notifying the station attendant. Leave the area immediately.

CAUTION

If you need a new fuel cap, be sure to get a genuine SUZUKI cap or its equivalent. Your dealer can get one for you. If you get the improper type, it may not fit properly. This may cause your malfunction indicator lamp to light and may damage your fuel tank and emissions system. See "Malfunction Indicator Lamp" in the Index.

Downloaded from www.Manualslib.com manuals search engine

Filling a Portable Fuel Container

⚠ WARNING

Never fill a portable fuel container while it is in your vehicle. Static electricity discharge from the container can ignite the gasoline vapor. You can be badly burned and your vehicle can be damaged if this occurs. To help avoid injury to you and others:

- **Dispense gasoline only into approved containers.**
- **Do not fill a container while it is inside a vehicle, in a vehicle's trunk, pickup bed or on any surface other than the ground.**
- **Bring the fill nozzle in contact with the inside of the fill opening before operating the nozzle. Contact should be maintained until the filling is complete.**
- **Don't smoke while pumping gasoline.**

Checking Things Under the Hood

⚠ WARNING

An electric fan under the hood can start up and injure you even when the engine is not running. Keep hands, clothing and tools away from any underhood electric fan.

⚠ WARNING

Things that burn can get on hot engine parts and start a fire. These include liquids like fuel, oil, coolant, brake fluid, windshield washer and other fluids, and plastic or rubber. You or others could be burned. Be careful not to drop or spill things that will burn onto a hot engine.

Hood Release

To open the hood, do the following.

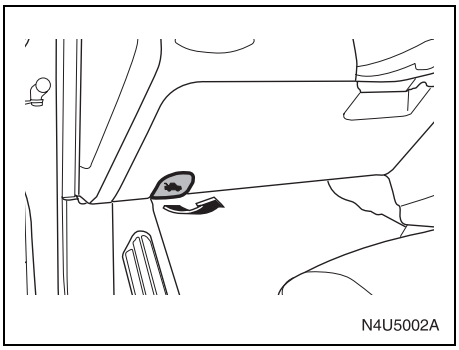

1) Pull the hood release handle located at the lower left side of the instrument panel.

Downloaded from www.Manualslib.com manuals search engine

Checking Things Under the Hood:

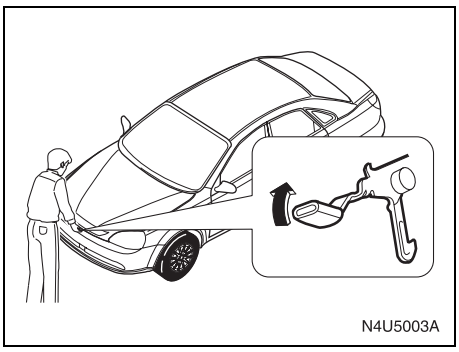

2) Then go to the front of the vehicle and lift the bottom of the secondary hood release lever upward. The secondary hood release lever is located near the front center of the hood.

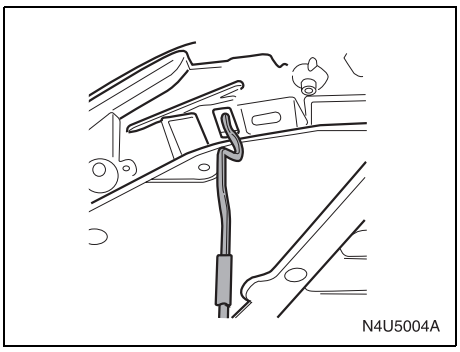

3) Lift the hood, release the hood prop from its retainer and place the hood prop into the slot in the hood.

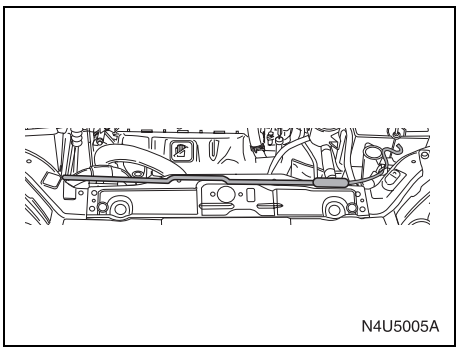

4) Before closing the hood, be sure all the filler caps are on properly. Then lift the hood to relieve pressure on the hood prop. Remove the hood prop from the slot in the hood and return the prop to its retainer. Lower the hood 12 in (30 cm) above the vehicle and release it to latch fully. Check to make sure the hood is closed and repeat the process if necessary.

Downloaded from www.Manualslib.com manuals search engine

Checking Things Under the Hood:

Engine Compartment Overview

When you open the hood on the engine, you'll see the following:

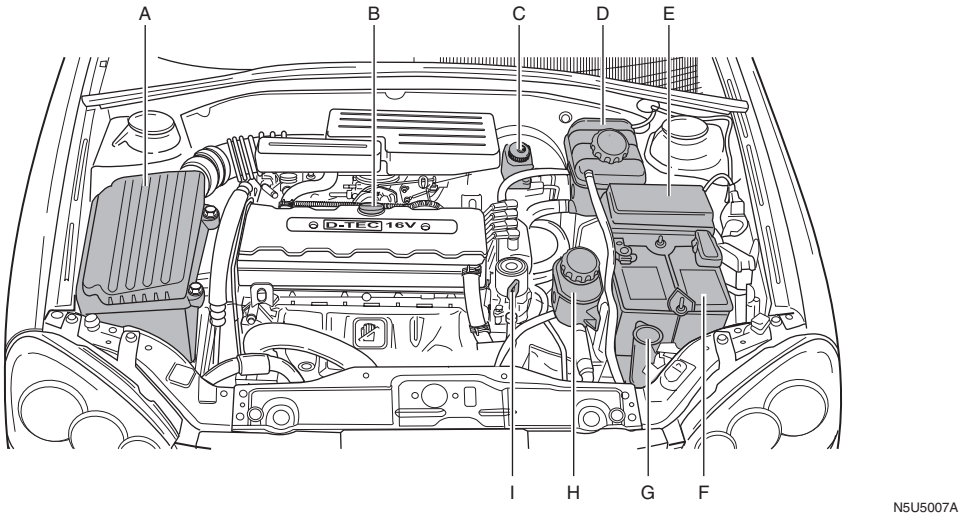

A. Engine Air Cleaner/Filter
B. Engine Oil Filler Cap
C. Brake/Clutch Fluid Reservoir
D. Engine Coolant Surge Tank
E. Underhood Fuse Block
F. Battery
G. Windshield Washer Fluid Reservoir
H. Power Steering Fluid Reservoir
I. Engine Oil Dipstick

Downloaded from www.Manualslib.com manuals search engine

SERVICE AND APPEARANCE CARE

Engine Oil

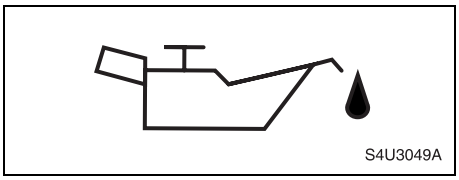

If the oil pressure light appears on the instrument cluster, it means you need to check your engine oil level right away.

For more information, see “Oil Pressure Light” in section 3.

You should check your engine oil level regularly; this is an added reminder.

Checking Engine Oil
It’s a good idea to check your engine oil every time you get fuel. In order to get an accurate reading, the oil must be warm and the vehicle must be on level ground.

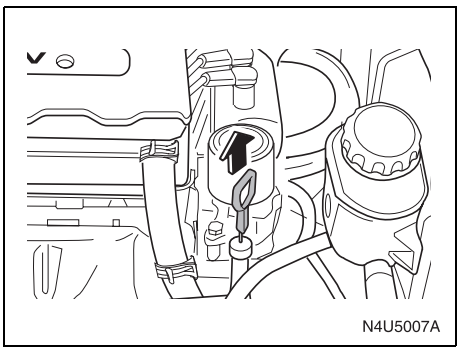

Use the engine oil dipstick to check the oil level. The dipstick’s handle will be a yellow ring. See “Engine Compartment Overview” in this section for the location of the engine oil dipstick.

Turn off the engine and give the oil several minutes to drain back into the oil pan. If you don’t, the oil dipstick might not show the actual level.

Pull out the dipstick and clean it with a paper towel or cloth, then push it back in all the way. Remove it again, keeping the tip down and check the level.

When to Add Engine Oil

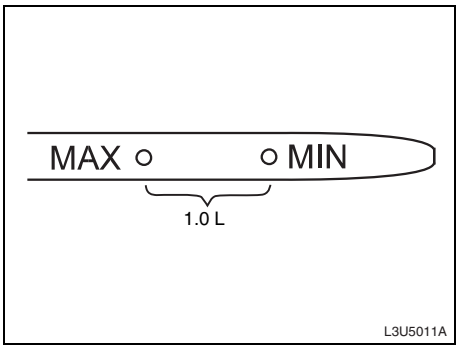

If the oil is at or below the MIN mark, then you’ll need to add at least one quart of oil. But you must use the right kind. This section explains what kind of oil to use. For engine oil crankcase capacity, see “Capacities and Specifications” in this section.

CAUTION

Don’t add too much oil. If your engine has so much oil that the oil level gets above the upper mark that shows the proper operating range, your engine could be damaged.

Downloaded from www.Manualslib.com manuals search engine

Checking Things Under the Hood:

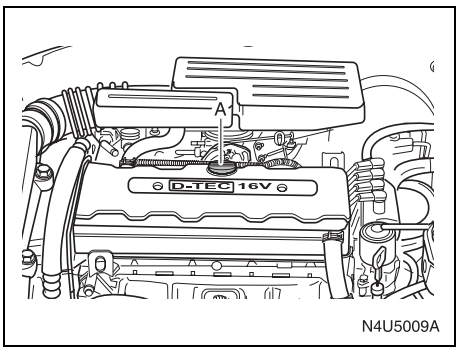

This (A) is where you add oil. See “Engine Compartment Overview” on a previous page in this section for more information on location.

Be sure to add enough oil to put the level somewhere in the proper operating range. Push the dipstick all the way back in when you’re through.

What Kind of Engine Oil to Use

Oils recommended for your vehicle can be identified by looking for the starburst symbol.

This symbol indicates that the oil has been certified by the American Petroleum Institute (API). Do not use any oil which does not carry this starburst symbol.

If you choose to perform the engine oil change service yourself, be sure the oil you use has the starburst symbol on the front of the oil container. If you have your oil changed for you, be sure the oil put into your engine is American Petroleum Institute certified for gasoline engines.

You should also use the proper viscosity oil for your vehicle, as shown in the viscosity chart.

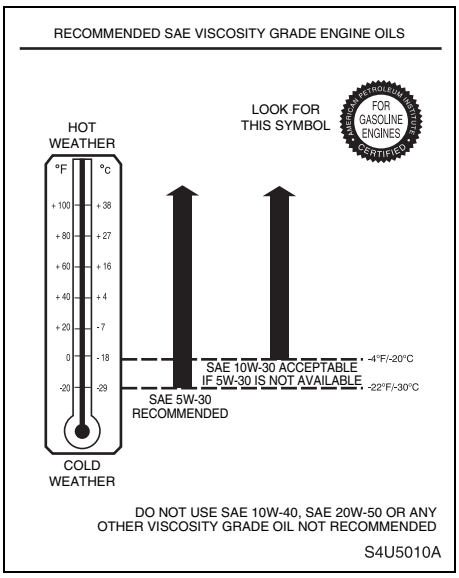

- SAE 5W-30
  As shown in the viscosity chart, SAE 5W-30 is the only viscosity grade recommended for your vehicle. However, if it’s going to be –4°F (–20°C) or above and SAE 5W-30 is not available, you may use SAE 10W-30.
  These numbers on an oil container show its viscosity, or thickness. Do not use other viscosity oil such as SAE 10W-40 or SAE 20W-50 under any conditions.

Downloaded from www.Manualslib.com manuals search engine

CAUTION

Use only engine oil with the American Petroleum Institute Certified For Gasoline Engines starburst symbol. Failure to use the recommended oil can result in engine damage not covered by your warranty.

If you are in an area of extreme cold, where the temperature falls below –22°F (–30°C), it is recommended that you use either an SAE 5W-30 synthetic oil or an SAE 0W-30 oil. Both will provide easier cold starting and better protection for your engine at extremely low temperatures.

Engine Oil Additives
Don't add anything to your oil. The recommended oils with the starburst symbol are all you will need for good performance and engine protection.

When to Change Engine Oil
If any one of these is true for you, use the short trip/city maintenance schedule:

- Most trips are less than 5 miles (8 km). This is particularly important when outside temperatures are below freezing.
- Most trips include extensive idling (such as frequent driving in stop-and-go traffic).
- The vehicle is used for delivery service, police, taxi or other commercial application.

Driving under these conditions causes engine oil to break down sooner. If any one of these is true for your vehicle, then you need to change your oil and filter every 3,750 miles (6,000 km) or 3 months – whichever occurs first.

If none of them is true, use the long trip/highway maintenance schedule. Change the oil and filter every 7,500 miles (12,000 km) or 6 months – whichever occurs first. Driving a vehicle with a fully warmed engine under highway conditions will cause engine oil to break down slower.

What to Do with Used Oil
Used engine oil contains certain elements that may be unhealthy for your skin and could even cause cancer. Don't let used oil stay on your skin for very long. Clean your skin and nails with soap and water, or a good hand cleaner. Wash or properly dispose of clothing or rags containing used engine oil. See the manufacturer's warnings about the use and disposal of oil products.

Used oil can be a threat to the environment. If you change your own oil, be sure to drain all the oil from the filter before disposal. Never dispose of oil by putting it in the trash, pouring it on the ground, into sewers, or into streams or bodies of water. Instead, recycle it by taking it to a place that collects used oil. If you have a problem properly disposing of your used oil, ask your dealer, a service station or a local recycling center for help.

Engine Air Cleaner/Filter

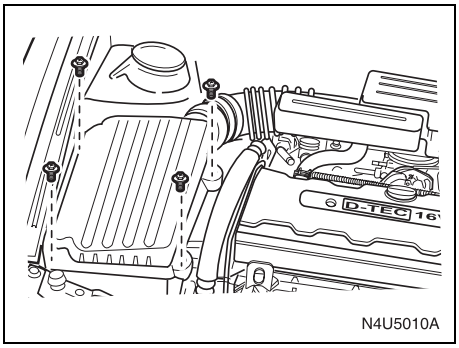

The engine air cleaner/filter is located on the passenger's side of the engine compartment. See "Engine Compartment Overview" in this section for more information on location.

When to Inspect the Engine Air Cleaner/Filter
Inspect the air cleaner/filter every 7,500 miles (12,000 km) or 6 months – whichever occurs first.

Replace every 30,000 miles (48,000 km) or 24 months – whichever comes first.

If you are driving in dusty/dirty conditions, inspect the filter every 3,750 miles (6,000

Downloaded from www.Manualslib.com manuals search engine

Checking Things Under the Hood:

km) or 3 months. If necessary, clean or replace it.

How to Inspect the Engine Air Cleaner/ Filter
To inspect the air cleaner/filter, remove the filter from the vehicle and lightly shake the filter to release loose dust and dirt. If the filter remains "caked" with dirt, a new filter is required.

To inspect or replace the filter, do the following:

1) Remove the four screws on the cover.
2) Lift off the cover.
3) Check or replace the engine air cleaner/filter. See "Normal Maintenance Replacement Parts" in this section for replacement part numbers.
4) Reinstall the filter, put the cover back on tightly, and tighten the screws.

⚠ WARNING

Operating the engine with the air cleaner/filter off can cause you or others to be burned. The air cleaner not only cleans the air, it helps to stop flame if the engine backfires. If it isn't there and the engine backfires, you could be burned. Don't drive with it off, and be careful working on the engine with the air cleaner/filter off.

CAUTION

If the air cleaner/filter is off, a backfire can cause a damaging engine fire. And, dirt can easily get into your engine, which will damage it. Always have the air cleaner/filter in place when you're driving.

Automatic Transmission Fluid

To ensure proper functioning, efficiency, and durability of the automatic transmission, be sure to keep the transmission fluid at the proper level. Too much or too little fluid can cause problems.

The fluid level must be checked with the engine running and the selector lever in P (Park). The vehicle must be up to normal operating temperature and parked on level ground.

The normal operating temperature for the fluid will be reached after driving about 10 minutes.

Checking Automatic Transmission Fluid Level
If the fluid is contaminated or discolored, change the automatic transmission fluid.

A decrease in the fluid level indicates a leak in the automatic transmission. If noted, contact your dealer for repair as soon as possible.

⚠ WARNING

This work requires special skill and equipment. Before attempting to do the work, be sure you are fully acquainted with doing this job.
Have your dealer do this work if you are not confident you can complete the task safely.
Otherwise, you could be injured or could damage the vehicle.

1) Start the engine.
2) Warm up the engine until the temperature of the automatic transmission fluid reaches approximately 40°C (104°F).
3) Move the selector lever from "P" to "1" and return to "P". Wait for a few seconds at each select position until the selected gears are fully engaged.

Downloaded from www.Manualslib.com manuals search engine

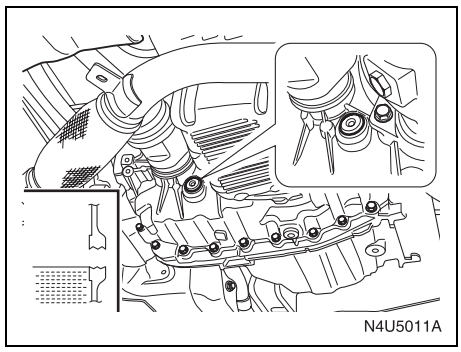

4) Remove filler plug.
5) Make sure the fluid reaches the bottom edge of the filler plug hole.
6) If the level is low, add fluid until it begins to run out the filler hole.
7) After filling to the correct level, reinstall the plug securely.

Recommend Automatic Transmission Fluid and Maintenance Schedule
Change both the fluid and filter every 37,500 miles (60,000 km) if the vehicle is mainly driven under one or more of these conditions:

- In heavy city traffic where the outside temperature regularly reaches 90°F (32°C) or higher.
- In hilly or mountainous terrain.
- For business uses such as taxi, police or delivery service.

If you do not use your vehicle under any of these conditions, the fluid and filter do not require changing.

CAUTION

Use of automatic transmission fluid labeled other than ESSO LT 71141 or TOTAL ATF H50235 may damage your vehicle, and the damages may not be covered by your warranty. Always use ESSO LT 71141 or TOTAL ATF H50235 labeled automatic transmission fluid.

See "Recommended Fluids and Lubricants" in section 6 for the proper fluid to use.

Manual Transmission Fluid

Checking Transmission Fluid Level

⚠ WARNING

This work requires special skill and equipment. Before attempting to do the work, be sure you are fully acquainted with doing this job.
Have your dealer do this work if you are not confident you can complete the task safely.
Otherwise, you could be injured or could damage the vehicle.

1) Turn the engine off.
2) Allow the transmission to cool. It must be cool enough for you to rest your fingers on the transmission case.
3) Remove filler plug.
4) Make sure the fluid reaches the bottom edge of the filler plug hole.

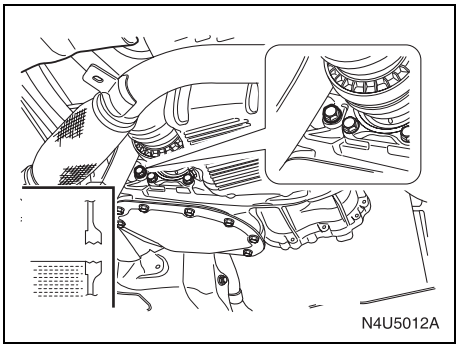

5) If the level is low, add fluid until it begins to run out the filler hole.
6) After filling to the correct level, reinstall the plug securely.
7) Visually check the transmission case for leaks or damage.

See "Recommended Fluids and Lubricants" in section 6 for the proper fluid to use.

Downloaded from www.Manualslib.com manuals search engine

Hydraulic Clutch

There is one reservoir for both the brake and the hydraulic clutch fluid. See “Brakes” in this section for more information.

The hydraulic clutch linkage in your vehicle is self-adjusting. The master cylinder reservoir is filled with hydraulic fluid.

A fluid loss in this system could indicate a problem. Have the system inspected and repaired.

When to Check and What to Use

Refer to the Maintenance Schedule to determine how often you should check the fluid level and for the proper fluid. See section 6.

How to Check and Add Fluid

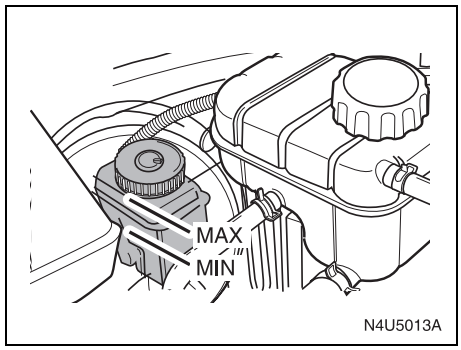

To check the fluid level, look on the side of the reservoir. If the fluid level is between the MIN and the MAX marks on the reservoir, the fluid level is correct. The reservoir is located near the back of the engine compartment on the driver’s side of the vehicle. See “Engine Compartment Overview” in this section for more information on location.

Engine Coolant

The following explains your cooling system and how to add coolant when it is low. If you have a problem with the engine overheating, see “Engine Overheating” in this section.

What to Use

Use a 60/40 mixture of clean, drinkable water and silicate based coolant which won’t damage aluminum parts. If another type of coolant is used, aluminum parts might be subject to corrosion. You can also use a recycled coolant with a complete coolant flush and refill. If you use this coolant mixture, you don’t need to add anything else.

A 60/40 mixture of clean, drinkable water and proper coolant will:

- Give freezing protection down to –33°F (–36°C).
- Give boiling protection up to 268°F (131°C).
- Protect against rust and corrosion.
- Help keep the proper engine temperature.
- Let the warning lights and gauges work as they should.

For protection in extremely cold weather conditions, use a 50/50 mixture of clean, drinkable water and proper coolant.

⚠ WARNING

Adding only plain water to your cooling system can be dangerous. Plain water, or some other liquid such as alcohol, can boil before the proper coolant mixture will. Your vehicle’s coolant warning system is set for the proper coolant mixture. With plain water or the wrong mixture, your engine could get too hot but you wouldn’t get the overheat warning. Your engine could catch fire and you or others could be burned. Use a 60/40 mixture of clean, drinkable water and the proper coolant.

CAUTION

If you use an improper coolant mixture, your engine could overheat and be badly damaged. The repair cost wouldn’t be covered by your warranty. Too much water in the mixture can freeze and crack the engine, radiator, heater core and other parts.

Downloaded from www.Manualslib.com manuals search engine

SERVICE AND APPEARANCE CARE

If you have to add coolant more than four times a year, have your dealer check your cooling system.

CAUTION

If you use the proper coolant, you don't have to add extra inhibitors or additives which claim to improve the system. These can be harmful.

Checking Coolant

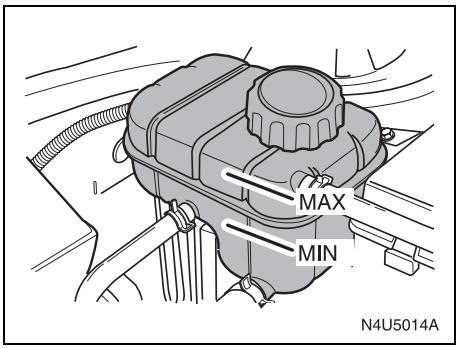

The engine coolant surge tank is located on the driver's side of the engine compartment. See "Engine Compartment Overview" in this section for more information on location.

⚠ WARNING

Never turn the surge tank pressure cap – even a little – when the engine and radiator are hot.
Loosening the surge tank pressure cap when the engine and radiator are hot can allow steam and scalding liquids to blow out and burn you badly.

The vehicle must be on a level surface. When your engine is cold, the coolant level should be between MAX and MIN mark on the coolant surge tank. The level rises at engine operation temperature and drops again when the engine cools down.

Adding Coolant
If the level falls below the MIN mark, add the proper coolant mixture at the surge tank, but only when the engine is cool. If the surge tank is empty, a special fill procedure is necessary. See "Cooling System" in this section for instructions on "How to Add Coolant to the Coolant Surge Tank".

⚠ WARNING

Don't spill coolant on a hot engine. You can be burned if you spill coolant on hot engine parts. Coolant contains ethylene glycol, and it will burn if the engine parts are hot enough.

When replacing the pressure cap, make sure it is hand-tight.

Coolant Surge Tank Pressure Cap

CAUTION

Your coolant surge tank cap is a pressure-type cap and must be tightly installed to prevent coolant loss and possible engine damage from overheating. See "Capacities and Specifications" for more information.

Engine Overheating

You will find a coolant temperature gauge on your vehicle's instrument panel. See "Engine Coolant Temperature Gauge" in section 3.

Downloaded from www.Manualslib.com manuals search engine

Checking Things Under the Hood:

If Steam Is Coming From Your Engine

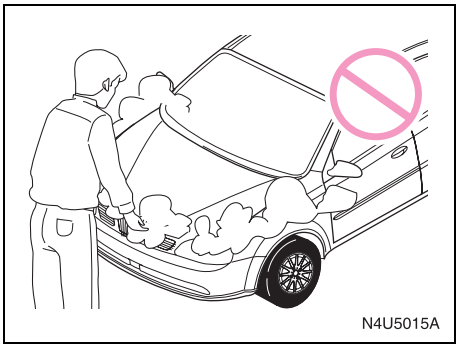

⚠ WARNING

Steam from an overheated engine can burn you badly, even if you just open the hood. Stay away from the engine if you see or hear steam coming from it. Just turn it off and get everyone away from the vehicle until it cools down. Wait until there is no sign of steam or coolant before you open the hood.
If you keep driving when your engine is overheated, the liquids in it can catch fire. You or others could be badly burned. Stop your engine if it overheats, and get out of the vehicle until the engine is cool.

CAUTION

If your engine catches fire because you keep driving with no coolant, your vehicle can be badly damaged. The costly repairs would not be covered by your warranty.

If No Steam Is Coming From Your Engine

If you get an engine overheat warning, but see or hear no steam, the problem may not be too serious. Sometimes the engine can get a little too hot when you:

- Climb a long hill on a hot day.
- Stop after high-speed driving.
- Idle for long periods in traffic.

If you get the overheat warning with no sign of steam, try this for a minute or so:

1) In heavy traffic, let the engine idle in NEUTRAL while stopped. If it is safe to do so, pull off the road, shift to PARK (P) or NEUTRAL and let the engine idle.
2) Turn on your heater to full hot at the highest fan speed and open the window as necessary.

If you no longer have the overheat warning, you can drive. Just to be safe, drive slower for about 10 minutes. If the warning doesn't come back on, you can drive normally.

If the warning continues and you have not stopped, pull over, stop, and park your vehicle right away.

If there's still no sign of steam, you can idle the engine for three minutes while you're parked. If you still have the warning, turn off the engine and get everyone out of the vehicle until it cools down.

You may decide not to lift the hood, but to get service help right away.

Cooling System

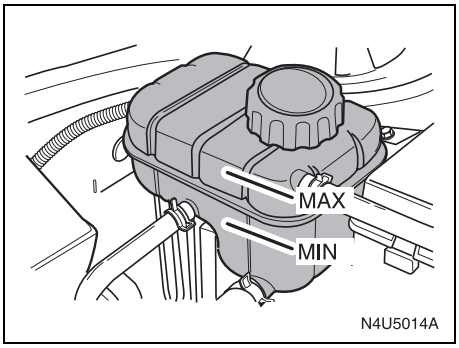

The engine coolant surge tank is located in the rear of the engine compartment on the driver's side.

Downloaded from www.Manualslib.com manuals search engine

SERVICE AND APPEARANCE CARE

⚠ WARNING

An electric engine cooling fan under the hood can start up even when the engine is not running and can injure you. Keep hands, clothing and tools away from any underhood electric fan.

If the coolant inside the coolant surge tank is boiling, don't do anything else until it cools down. The vehicle should be parked on a level surface. Make sure that the air conditioning is turned off.

The coolant level should be between the MIN and MAX marks on the coolant surge tank when the engine is cool. If it isn't, you may have a leak at the pressure cap or in the radiator hoses, heater hoses, radiator, water pump or somewhere else in the cooling system.

⚠ WARNING

Heater and radiator hoses, and other engine parts, can be very hot. Don't touch them. If you do, you can be burned.
Don't run the engine if there is a leak. If you run the engine, it could lose all of the coolant. That could cause an engine fire, and you could be burned. Get any leak fixed before you drive the vehicle.

If there seems to be no leak, with the engine on, check to see if the electric engine cooling fan is running. If the engine is overheating, the fan should be running. If it isn't, your vehicle needs service.

CAUTION

Engine damage from running your engine without coolant isn't covered by your warranty.

How to Add Coolant to the Coolant Surge Tank

CAUTION

This vehicle has a specific coolant fill procedure. Failure to follow this procedure could cause your engine to overheat and be severely damaged.

If you haven't found a problem yet, check to see if coolant is visible in the surge tank. If coolant is visible but the coolant level isn't between the MIN and MAX marks, add a 60/40 mixture of clean, drinkable water and proper coolant at the coolant surge tank, but be sure the cooling system, including the coolant surge tank pressure cap, is cool before you do it. See "Engine Coolant" in this section for more information.

If no coolant is visible in the surge tank, add coolant as follows:

⚠ WARNING

Never turn the cap when the cooling system, including the coolant surge tank pressure cap, is hot.
Steam and scalding liquids from a hot cooling system can blow out and burn you badly. They are under pressure, and if you loosen the coolant surge tank pressure cap – even a little – they can come out at high speed. Wait for the cooling system and coolant surge tank pressure cap to cool if you ever have to loosen the pressure cap.

Downloaded from www.Manualslib.com manuals search engine

Checking Things Under the Hood:

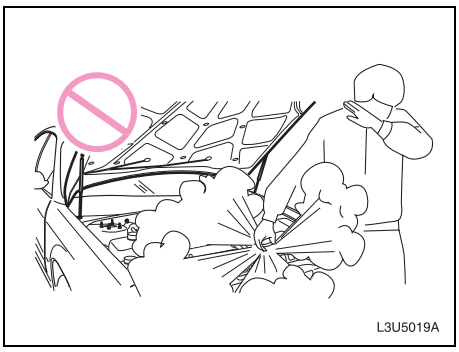

⚠ WARNING

Adding only plain water to your cooling system can be dangerous. Plain water, or some other liquid such as alcohol, can boil before the proper coolant mixture will. Your vehicle's coolant warning system is set for the proper coolant mixture. With plain water or the wrong mixture, your engine could get too hot but you wouldn't get the overheat warning. Your engine could catch fire and you or others could be burned. Use a 60/40 mixture of clean, drinkable water and a proper coolant.

CAUTION

In cold weather, water can freeze and crack the engine, radiator, heater core and other parts. Use the recommended coolant and the proper coolant mixture.

⚠ WARNING

You can be burned if you spill coolant on hot engine parts. Coolant contains ethylene glycol and it will burn if the engine parts are hot enough. Don't spill coolant on a hot engine.

1) Park the vehicle on a level surface. You can remove the coolant surge tank pressure cap when the cooling system, including the coolant surge tank pressure cap and upper radiator hose, is no longer hot. Turn the pressure cap slowly counterclockwise (left) about two or two and one-half turns. If you hear a hiss, wait for that to stop. This will allow any pressure still left to be vented out the discharge hose.

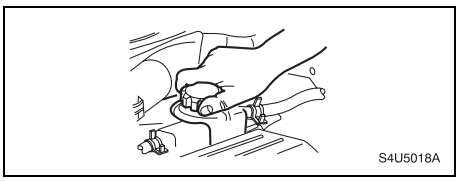

2) Then keep turning the pressure cap slowly, and remove it.

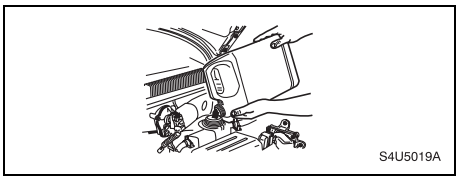

3) Fill the coolant surge tank with the proper mixture to the MAX mark on the coolant surge tank. Wait about five minutes, then check to see if the level is below the MAX mark. If the level is below the MAX mark, add additional coolant to bring the level up to the MAX mark. Repeat this procedure until the level remains constant at the MAX mark for at least five minutes.
4) With the coolant surge tank pressure cap off, start the engine and let it run until you can feel the upper radiator hose getting hot. Watch out for the engine cooling fan.
By this time, the coolant level inside the coolant surge tank may be lower. If the

Downloaded from www.Manualslib.com manuals search engine

level is lower than the MAX mark, add more of the proper mixture to the coolant surge tank until the level reaches the MAX mark.

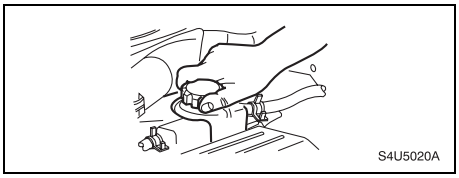

5) Then replace the pressure cap. Be sure the pressure cap is hand-tight and fully seated. See your dealer, if necessary.

Power Steering Fluid

The power steering fluid reservoir is located toward the front of the engine compartment on the driver's side of the vehicle. See "Engine Compartment Overview" in this section for more information on location.

When to Check Power Steering Fluid

It is not necessary to regularly check power steering fluid unless you suspect there is a leak in the system or you hear an unusual noise. A fluid loss in this system could indicate a problem. Have the system inspected and repaired.

How to Check Power Steering Fluid

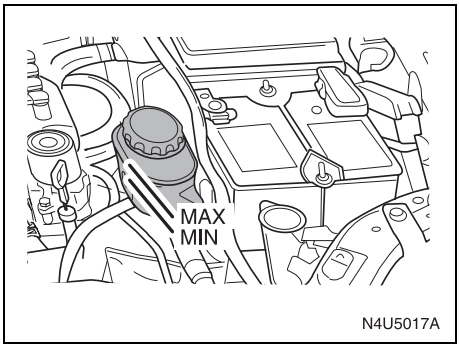

Turn the key off and then check the fluid level. The level should be between the MIN and MAX marks on the reservoir. If the level is below the MIN mark, add power steering fluid.

What to Use

To determine what kind of fluid to use, see "Recommended Fluids and Lubricants" in section 6. Always use the proper fluid. Failure to use the proper fluid can cause leaks and can damage hoses and seals.

Windshield Washer Fluid

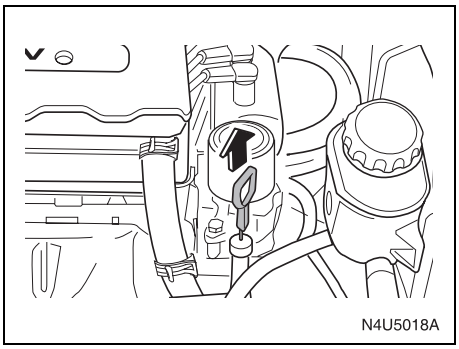

The windshield washer fluid reservoir is located in the front of the engine compartment on the driver's side. See "Engine Compartment Overview" in this section for more information on location.

What to Use

When you need windshield washer fluid, be sure to read the manufacturer's instructions before use. If you will be operating your vehicle in an area where the temperature may fall below freezing, use a fluid that has sufficient protection against freezing.

Downloaded from www.Manualslib.com manuals search engine

Adding Washer Fluid

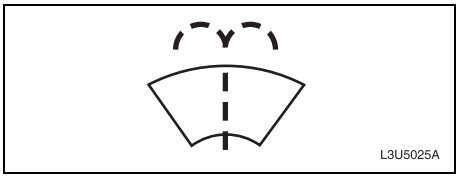

Open the cap with the washer symbol on it. Add washer fluid until the tank is full.

CAUTION

- **When using concentrated washer fluid, follow the manufacturer's instructions for adding water.**
- **Don't mix water with ready-to-use washer fluid. Water can cause the solution to freeze and damage your washer fluid tank and other parts of the washer system. Also, water doesn't clean as well as washer fluid.**
- **Fill your washer fluid tank only three-quarters full when it's very cold. This allows for expansion if freezing occurs, which could damage the tank if it is completely full.**
- **Don't use engine coolant (anti-freeze) in your windshield washer. It can damage your washer system and paint.**

Brakes

Brake Fluid

Your brake master cylinder reservoir is located near the back of the engine compartment on the driver's side of the vehicle. It is filled with DOT-3 brake fluid. See "Engine Compartment Overview" in this section for the location of the reservoir.

There are only two reasons why the brake fluid level in the reservoir might go down. The first is that the brake fluid goes down to an acceptable level during normal brake lining wear.

When new linings are put in, the fluid level goes back up. The other reason is that fluid is leaking out of the brake system. If it is, you should have your brake system fixed, since a leak means that sooner or later your brakes won't work well, or won't work at all.

So, it isn't a good idea to "top off" your brake fluid. Adding brake fluid won't correct a leak. If you add fluid when your linings are worn, then you'll have too much fluid when you get new brake linings. You should add (or remove) brake fluid, as necessary, only when work is done on the brake hydraulic system.

⚠ WARNING

If you have too much brake fluid, it can spill on the engine. The fluid will burn if the engine is hot enough. You or others could be burned, and your vehicle could be damaged.

When your brake fluid falls to a low level, your brake warning light will come on. See "Brake System Warning Light" in section 3.

What to Add

When you do need brake fluid, use only DOT-3 brake fluid. Use new brake fluid from a sealed container only. See "Recommended Fluids and Lubricants" in section 6.

Always clean the brake fluid reservoir cap and the area around the cap before removing it. This will help keep dirt from entering the reservoir.

⚠ WARNING

With the wrong kind of fluid in your brake system, your brakes may not work well, or they may not even work at all. This could cause a crash. Always use the proper brake fluid.

Downloaded from www.Manualslib.com manuals search engine

SERVICE AND APPEARANCE CARE

CAUTION

- **Using the wrong fluid can badly damage brake system parts. For example, just a few drops of mineral-based oil, such as engine oil, in your brake system can damage brake system parts so badly that they'll have to be replaced. Don't let someone put in the wrong kind of fluid.**
- **If you spill brake fluid on your vehicle's painted surfaces, the paint finish can be damaged. Be careful not to spill brake fluid on your vehicle. If you do, wash it off immediately. See "Appearance Care" in the Index.**

Brake Wear
Your vehicle has front and rear disc brakes.

Disc brake pads have built-in wear indicators that make a high-pitched warning sound when the brake pads are worn and new pads are needed. The sound may come and go or be heard all the time your vehicle is moving (except when you are pushing on the brake pedal firmly).

⚠ WARNING

The brake wear warning sound means that soon your brakes won't work well. That could lead to an accident. When you hear the brake wear warning sound, have your vehicle serviced.

CAUTION

Continuing to drive with worn-out brake pads could result in costly brake repair.

Some driving conditions or climates may cause a brake squeal when the brakes are first applied or lightly applied. This does not mean something is wrong with your brakes.

Properly torqued wheel nuts are necessary to help prevent brake pulsation. When tires are rotated, inspect brake pads for wear and evenly tighten wheel nuts in the proper sequence to SUZUKI torque specifications.

Brake linings should always be replaced as complete axle sets.

See "Brake System Inspection" in section 6.

Brake Pedal Travel
See your dealer if the brake pedal does not return to normal height, or if there is a rapid increase in pedal travel. This could be a sign of brake trouble.

Brake Adjustment
Every time you make a moderate brake stop, your disc brakes adjust for wear. If you rarely make a moderate or heavier stop, then your brakes might not adjust correctly. If you drive in that way, then – very carefully – make a few moderate brake stops about every 1,000 miles (1,600 km), so your brakes will adjust properly.

Replacing Brake System Parts
The braking system on a vehicle is complex. Its many parts have to be of top quality and work well together if the vehicle is to have really good braking. When you replace parts of your braking system – for example, when your brake linings wear down and you need new ones put in – be sure you get new approved SUZUKI replacement parts. If you don't, your brakes may no longer work properly. For example, if someone puts in brake linings that are wrong for your vehicle, the balance between your front and rear brakes can change – for the worse. The braking performance you've come to expect can change in many other ways if someone puts in the wrong replacement brake parts.

Downloaded from www.Manualslib.com manuals search engine

Checking Things Under the Hood:

Battery

Your new vehicle comes with a maintenance free battery. When it's time for a new battery, get one that has the replacement number shown on the original battery's label. See "Engine Compartment Overview" in this section for battery location.

⚠ WARNING

Battery posts, terminals and related accessories contain lead and lead compounds, chemicals known to the State of California to cause cancer and reproductive harm. Wash hands after handling.

Vehicle Storage

If you're not going to drive your vehicle for 25 days or more, remove the black, negative (–) cable from the battery. This will help keep your battery from running down.

⚠ WARNING

Batteries have acid that can burn you and gas that can explode. You can be badly hurt if you aren't careful. See the next section, "Jump Starting", for tips on working around a battery without getting hurt.

Contact your dealer to learn how to prepare your vehicle for longer storage periods.

Jump Starting

If your battery has run down, you may want to use another vehicle and some jumper cables to start your vehicle. Be sure to follow the steps below to do it safely.

⚠ WARNING

Batteries can hurt you. They can be dangerous because:

- **They contain acid that can burn you.**
- **They contain gas that can explode or ignite.**
- **They contain enough electricity to burn you.**

If you don't follow these steps exactly, some or all of these things can hurt you.

CAUTION

Ignoring the following steps could result in costly damage to your vehicle that wouldn't be covered by your warranty.
Trying to start your vehicle by pushing or pulling it won't work, and it could damage your vehicle.

1) Check the other vehicle. It must have a 12-volt battery with a negative ground system.

CAUTION

If the other system isn't a 12-volt system with a negative ground, both vehicles can be damaged. Only use vehicles with 12-volt systems with negative grounds to jump start your vehicle.

2) Get the vehicles close enough so the jumper cables can reach, but be sure the vehicles aren't touching each other. If they are, it could cause a ground connection you don't want. You wouldn't be able to start your vehicle, and the bad grounding could damage the electrical systems.
   To avoid the possibility of the vehicles rolling, set the parking brake firmly on both vehicles involved in the jump start procedure. Put an automatic transmission in PARK (P) or a manual transmission in NEUTRAL before setting the parking brake.

CAUTION

If you leave your radio or other accessories on during the jump starting procedure, they could be damaged. The repairs wouldn't be covered by your warranty. Always turn off your radio and other accessories when jump starting your vehicle.

Downloaded from www.Manualslib.com manuals search engine

3) Turn off the ignition on both vehicles. Unplug unnecessary accessories plugged into the cigarette lighter or in the accessory power outlet. Turn off the radio and all lamps that aren't needed. This will avoid sparks and help save both batteries. And it could save your radio!
4) Open the hoods and locate the batteries. Find the positive (+) and negative (–) terminal locations on each vehicle. Your vehicle's positive (+) terminal is located under a red tethered cap on the battery. The negative (–) terminal is located under a black tethered cap on the battery. See "Engine Compartment Overview" in this section for more information on location. Flip the caps up to access the positive (+) and negative (–) terminals.

⚠ WARNING

An electric fan under the hood can start up and injure you even when the engine is not running. Keep hands, clothing and tools away from any underhood electric fan.

⚠ WARNING

Using a match near a battery can cause battery gas to explode. People have been hurt doing this, and some have been blinded. Use a flashlight if you need more light.
Be sure the battery has enough water. You don't need to add water to the battery installed in your new vehicle. But if a battery has filler caps, be sure the right amount of fluid is there. If it is low, add water to take care of that first. If you don't, explosive gas could be present.
Battery fluid contains acid that can burn you. Don't get it on you. If you accidentally get it in your eyes or on your skin, flush the place with water and get medical help immediately.

5) Check that the jumper cables don't have loose or missing insulation. If they do, you could get a shock. The vehicles could be damaged, too.
Before you connect the cables, here are some basic things you should know. Positive (+) will go to positive (+) or to a remote positive (+) terminal if the vehicle has one. Negative (–) will go to a heavy, unpainted metal engine part or to a remote negative (–) terminal if the vehicle with the dead battery has one.
Don't connect positive (+) to negative (–) or you'll get a short that would damage the battery and maybe other parts, too. And don't connect the negative (–) cable to the negative (–) terminal on the dead battery because this can cause sparks.

⚠ WARNING

An electric fan under the hood can start up and injure you even when the engine is not running. Keep hands, clothing and tools away from any underhood electric fan.

Downloaded from www.Manualslib.com manuals search engine

Checking Things Under the Hood:

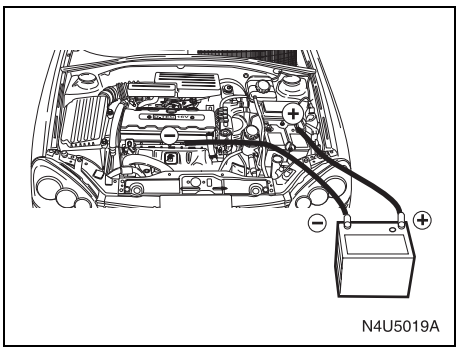

6) Connect the red positive (+) cable to the positive (+) terminal of the dead battery. Use a remote positive (+) terminal if the vehicle has one.

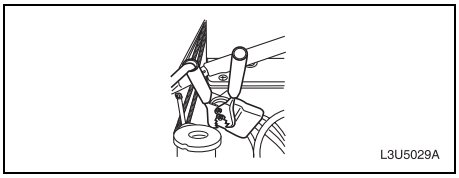

7) Don't let the other end touch metal. Connect it to the positive (+) terminal of the good battery. Use a remote positive (+) terminal if the vehicle has one.

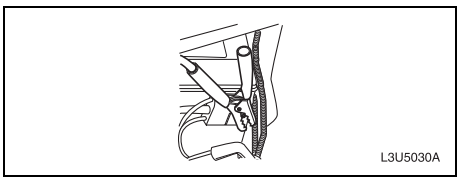

8) Now connect the black negative (–) cable to the negative (–) terminal of the good battery. Use a remote negative (–) terminal if the vehicle has one.
Don't let the other end touch anything until the next step. The other end of the negative (–) cable doesn't go to the dead battery. It goes to a heavy, unpainted metal engine part or to a remote negative (–) terminal on the vehicle with the dead battery.
9) Connect the other end of the negative (–) cable at least 18 inches (45 cm) away from the dead battery, but not near engine parts that move. The electrical connection is just as good there, and the chance of sparks getting back to the battery is much less.
10) Now start the vehicle with the good battery and run the engine for a while.
11) Try to start the vehicle that had the dead battery. If it won't start after a few tries, it probably needs service.

CAUTION

Damage to your vehicle may result from electrical shorting if jumper cables are removed incorrectly. To prevent electrical shorting, take care that the cables don't touch each other or any other metal. The repairs wouldn't be covered by your warranty.

Downloaded from www.Manualslib.com manuals search engine

SERVICE AND APPEARANCE CARE

Jumper Cable Removal

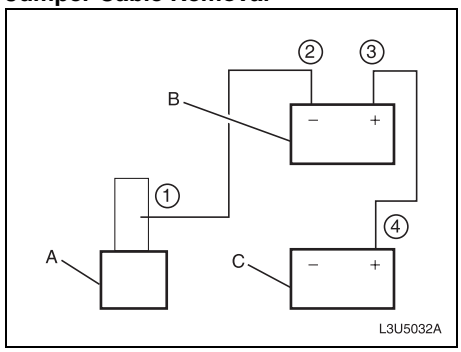

A. Heavy, Unpainted Metal Engine Part
B. Good Battery
C. Dead Battery

To disconnect the jumper cables from both vehicles, do the following:

1) Disconnect the black negative (–) cable from the vehicle that had the dead battery.
2) Disconnect the black negative (–) cable from the vehicle with the good battery.
3) Disconnect the red positive (+) cable from the vehicle with the good battery.
4) Disconnect the red positive (+) cable from the other vehicle.
5) Return the terminal cover to its original position.

Headlamp Aiming

If your vehicle is damaged in an accident, the headlamp aim may be affected. Aim adjustment of the low beam may be necessary if it is difficult to see lane markers, for horizontal aim, or if oncoming drivers flash their high beams at you, for vertical aim. If you believe your headlamps need to be re-aimed, we recommend that you take your vehicle to the dealer for service. However, it is possible for you to re-aim your headlamps by following the procedure in the service manual for your vehicle.

CAUTION

To make sure your headlamps are aimed properly, read all the instructions before beginning. Failure to follow these instructions could cause damage to headlamp parts.

Bulb Replacement

For the type of bulb to use, see “Replacement Bulbs” in this section. For any bulb changing procedure not listed in this section, contact your dealer.

Halogen Bulbs

⚠ WARNING

Halogen bulbs have pressurized gas inside and can burst if you drop or scratch the bulb. You or others could be injured. Be sure to read and follow the instructions on the bulb package.

Downloaded from www.Manualslib.com manuals search engine

Bulb Replacement:

Headlamps

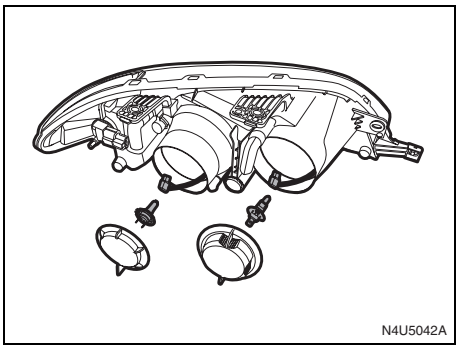

To replace a headlamp bulb:

1) Open the hood.
2) Remove the two bolts and one nut shown in the illustration that retain the headlamp assembly.
3) Disconnect the wiring harness connector from the rear of the bulb.
4) Remove the headlamp cap by turning it counterclockwise.
5) Release the spring that retains the bulb.
6) Remove the old bulb.
7) Install the new bulb. See “Replacement Bulbs” in this section for the proper bulb.
8) Install the bulb retaining spring.
9) Install the wiring harness connector to the bulb and replace the headlamp cap by turning it clockwise.
10) Reverse the steps 1 and 2 to reinstall the headlamp assembly. Then, check the lamps.

Front Turn Signal Lamps

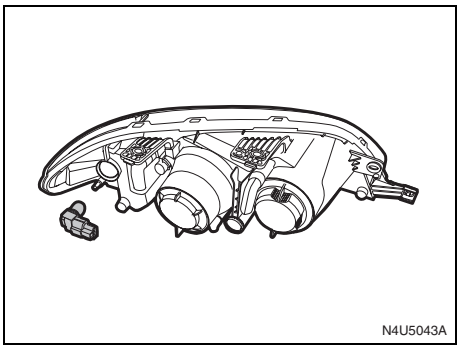

To replace a front turn signal lamp bulb:

1) Open the hood.
2) Remove the two bolts and one nut and remove the headlamp assembly.
3) Turn the front turn signal bulb socket counterclockwise.
4) Pull the front turn signal bulb socket out of the lamp housing.
5) Press the bulb inward and turn it counterclockwise to remove it from the bulb socket.
6) Install the new bulb into the bulb socket by pressing it in and turning it clockwise. See “Replacement Bulbs” in this section for the proper bulb.
7) Install the socket into the lamp housing by turning it clockwise.
8) Reverse the steps 1 and 2 to reinstall the headlamp assembly. Then, check the lamps.

Front Fog Lamps

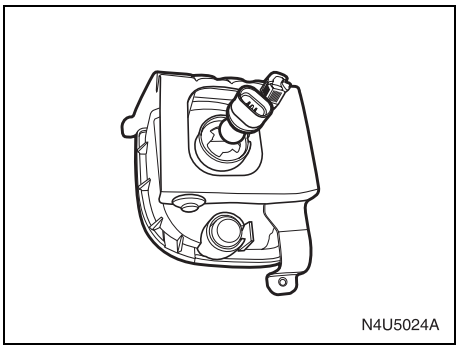

To replace a front fog lamp bulb:

1) Disconnect the wiring harness connector from the front fog lamp bulb.
2) Rotate the front fog lamp bulb counterclockwise and remove it.
3) Replace the bulb. See “Replacement Bulbs” in this section for the proper bulb.
4) Connect the wiring harness connector to the front fog lamp bulb.

Downloaded from www.Manualslib.com manuals search engine

Bulb Replacement:

Center High-Mounted Stop Lamp

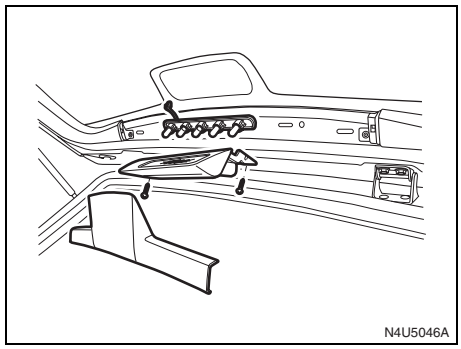

To replace a center high-mounted stop lamp bulb:

1) Open the liftgate.
2) Pry off the trim and remove the two screws shown in the illustration.
3) Remove the bulb socket from the lamp housing.
4) Remove the bulb by pulling it straight out of the bulb socket.
5) Install the appropriate bulb into the socket. See “Replacement Bulbs” in this section.
6) Replace the lamp housing and trim in reverse order.

Luggage Compartment Lamp

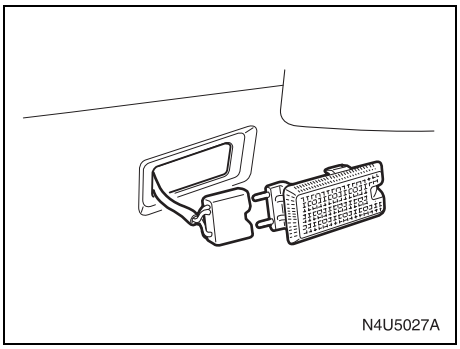

To replace a luggage compartment lamp bulb:

1) Use a flat screwdriver to pry the lamp assembly from the lamp assembly holder.
2) Replace the bulb. See “Replacement Bulbs” in this section for the proper bulb.
3) Reinstall the lamp assembly.

Tail/Stop Lamps and Rear Turn Signal Lamps

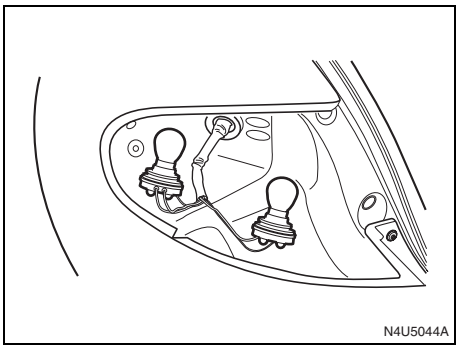

To replace a tail/stop lamp or a rear turn signal lamp bulb:

1) Open the liftgate.
2) Remove the two screws and the lamp assembly.
3) Remove the bulb socket from the lamp housing by turning the bulb socket counterclockwise.
4) Remove the bulb from the socket by pressing the bulb and turning it counterclockwise.
5) Install the appropriate bulb into the socket. See “Replacement Bulbs” in this section.
6) Replace the bulb socket into the lamp housing.

Downloaded from www.Manualslib.com manuals search engine

Bulb Replacement:

7) Replace the lamp housing into the vehicle using the two screws removed earlier.
8) Close the liftgate.

Backup Lamps and Tail/Stop Lamps

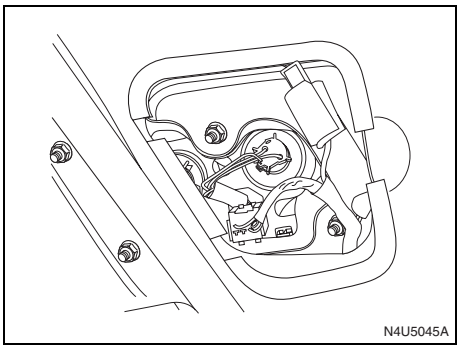

To replace a backup lamp or a tail/stop lamp bulb:

1) Open the liftgate.
2) Remove the protective cover.
3) Remove the bulb socket by turning it counterclockwise.
4) Remove the bulb from the socket by pressing the bulb and turning it counterclockwise.
5) Install the appropriate bulb into the socket. See “Replacement Bulbs” in this section.
6) Replace the bulb socket into the lamp housing. Turn the bulb socket clockwise to secure it.
7) Replace the protective cover and close the liftgate.

License Plate Lamps

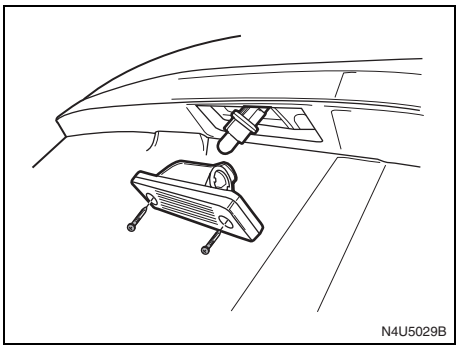

To replace a license plate lamp bulb:

1) Remove the two screws shown in the illustration and the lamp cover.
2) To remove the bulb holder from the lamp housing, rotate the bulb holder counterclockwise.
3) Pull the bulb out from the bulb holder.
4) Replace the bulb. See “Replacement Bulbs” in this section for the proper bulb.
5) Install the bulb holder into the lamp housing by rotating the bulb holder clockwise.
6) Replace the lamp cover.

Downloaded from www.Manualslib.com manuals search engine

SERVICE AND APPEARANCE CARE

Rear Sidemarker Lamps

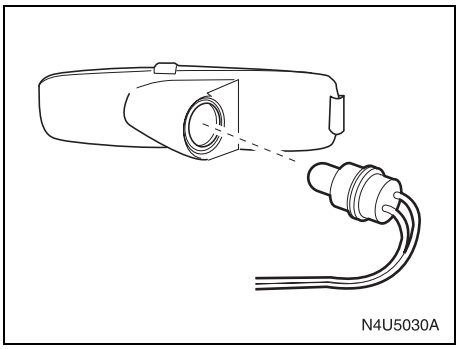

To replace a rear sidemarker lamp bulb:

1) Insert your hand into the inside of the rear bumper and hold the socket.
2) Rotate the rear sidemarker lamp bulb socket counterclockwise.
3) Pull the rear sidemarker bulb socket out of the rear bumper.
4) Pull the old bulb straight out from the bulb socket.
5) Push a new bulb straight into the socket.
6) Reverse the steps 1 through 3 to reinstall the bulb socket.

Replacement Bulbs

Bulb	Wattages x Quantity	Bulb No.
High-Beam Headlamp	55W x 2	H1
Low-Beam Headlamp	55W x 2	H1
Front Turn Signal Lamp	28/8W x 2	2357NA
Stop Lamp/ Tail Lamp	27/8W x 4	1157
Rear Turn Signal Lamp	27W x 2	1156NA
Backup Lamp	27W x 2	1156
License Plate Lamp	5W x 2	168
Center High-Mounted Stop Lamp	5W x 5	168
Rear Sidemarker Lamp	5W x 2	168

Windshield Wiper Blade Replacement

Windshield wiper blades should be inspected at least twice a year for wear or cracking. If the wiper blades become brittle or damaged, or make streaks when wiping, replace the wiper blades for optimum driving visibility. Replacement blades come in different types and are removed in different ways.

Here's how to remove the Shepherd's Hook type:

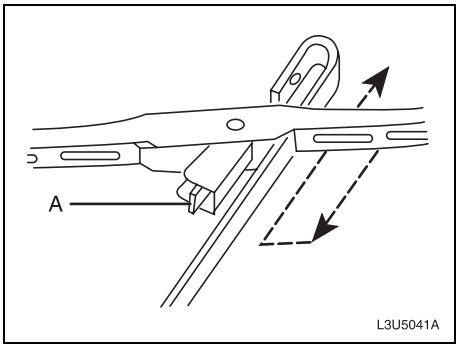

1) Pull the windshield wiper arm away from the windshield.
2) Press the retaining clip (A) and pull the wiper blade off the arm.
3) Install a new blade by reversing the steps 1 and 2.

Downloaded from www.Manualslib.com manuals search engine

Tires

Your new vehicle comes with high-quality tires made by a leading tire manufacturer. If you ever have questions about your tire warranty and where to obtain service, see your SUZUKI Warranty booklet for details.

For additional information refer to the tire manufacturer's booklet included with your vehicle's Owner's Manual.

⚠ WARNING

Poorly maintained and improperly used tires are dangerous.

- **Overloading your tires can cause overheating as a result of too much friction. You could have an air-out and a serious accident. See "Loading Your Vehicle" in the Index.**
- **Underinflated tires pose the same danger as overloaded tires. The resulting accident could cause serious injury. Check all tires frequently to maintain the recommended pressure. Tire pressure should be checked when your tires are cold.**
- **Overinflated tires are more likely to be cut, punctured or broken by a sudden impact – such as when you hit a pothole. Keep tires at the recommended pressure.**

(Continued)

⚠ WARNING

(Continued)

- **Worn, old tires can cause accidents. If your tread is badly worn, or if your tires have been damaged, replace them.**

Tire Sidewall Labeling

Useful information about a tire is molded into its sidewall. The examples below show a typical passenger car tire and a spare tire sidewall.

Passenger Car Tire Example

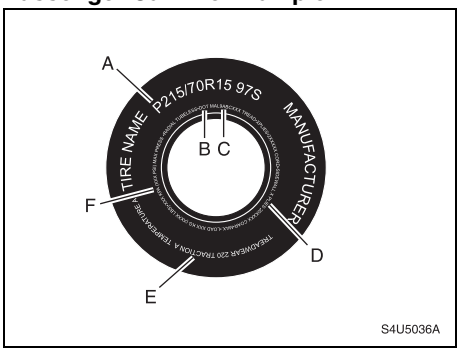

A. Tire Size
The tire size is a combination of letters and numbers used to define a particular tire's width, height, aspect ratio, construction type and service description. See the "Tire Size" illustration later in this section for more detail.

B. Department of Transportation (DOT) Code
The Department of Transportation (DOT) code indicates that the tire is in compliance with the U.S. Department of Transportation Motor Vehicle Safety Standards.

C. Tire Identification Number (TIN)
The letters and numbers following the DOT code are the Tire Identification Number (TIN). The TIN shows the manufacturer and plant code, tire size and date the tire was manufactured. The TIN is molded on to both sides of the tire, although only one side may have the date of manufacture.

D. Tire Ply Material
The type of cord and number of plies in the sidewall and under the tread.

E. Uniform Tire Quality Grading (UTQG)
Tire manufacturers are required to grade tires based on three performance factors: treadwear, traction and temperature resistance.

F. Maximum Cold Inflation Load Limit
Maximum load that can be carried and the maximum pressure needed to support that load.

G. Load Index and Speed Rating
The two- or three-digit number is the tire's load index, the maximum load a tire can carry at the speed indicated by its speed symbol at the maximum inflation pressure. The higher the

Downloaded from www.Manualslib.com manuals search engine

number is, the greater the load carrying capacity. The letter symbol denotes the speed at which a tire is designed to be driven for extended periods of time. (Ratings are listed below.)

Letter Rating	Speed Rating
Q	99 mph
R	106 mph
S	112 mph
T	118 mph
U	124 mph
H	130 mph
V	149 mph
W	168 mph*
Y	186 mph*

*The letters ZR may be used on tires with a maximum speed capability over 149 mph and will always be used on tires with a maximum speed capability over 186 mph.

Compact Spare Tire Example

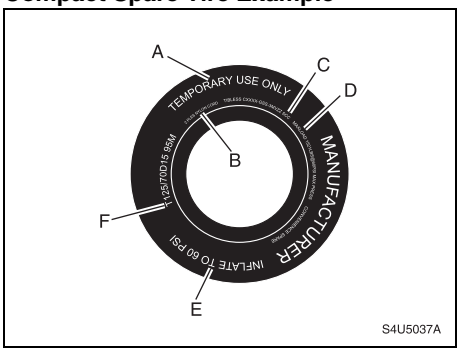

A. Temporary Use Only Marking
The compact spare tire should not be driven at speeds over 50 mph (80 km/h). The compact spare tire is for emergency use when a regular road tire has lost air and gone flat. See “Compact Spare Tire” and “If a Tire Goes Flat” in this section.
B. Tire Ply Material
The type of cord and number of plies in the sidewall and under the tread.
C. Tire Identification Number (TIN)
The Tire Identification Number (TIN) shows the manufacturer and plant code, tire size, and date the tire was manufactured. The TIN is molded onto both sides of the tire, although only one side may have the date of manufacture.
D. Maximum Cold Inflation Load Limit
Maximum load that can be carried and the maximum pressure needed to support that load. See “Compact Spare Tire” in this section and “Loading Your Vehicle” in section 4.
E. Tire Inflation Pressure
The temporary use tire or compact spare tire should be inflated to 60 psi (420 kPa). For more information on tire pressure and inflation, see “Tire Inflation Pressure” in this section.
F. Tire Size
A combination of letters and numbers defining a tire’s width, height, aspect ratio, construction type and service description. The letter “T” as the first character in the tire size means the tire is for temporary use only.

Tire Size

⚠ WARNING

Your SUZUKI is equipped with tires which are all the same type and size. This is important to ensure proper steering and handling of the vehicle. Never mix tires of different size or type on the four wheels of your vehicle. Mixing tires could cause you to lose control while driving which may lead to an accident. The size and type of tires used should be only those approved by SUZUKI Motor Corporation as standard or optional equipment for your vehicle.

Downloaded from www.Manualslib.com manuals search engine

Tires:

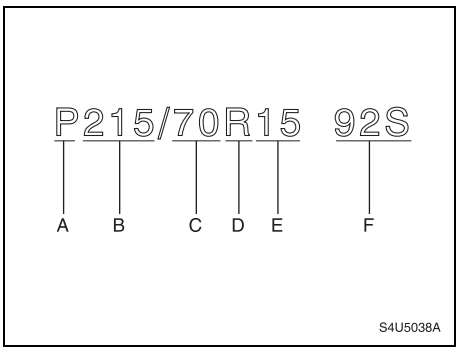

The following illustration shows an example of a typical passenger car tire size.

A. Tire Type
This letter code indicates the primary intended use of the tire. The “P” as the first character in the tire size means a passenger vehicle tire engineered to standards set by the U.S. Tire and Rim Association.

B. Tire Width
The three-digit number indicates the tire section width in millimeters from sidewall to sidewall.

C. Aspect Ratio
A two-digit number that indicates the tire height-to-width measurements. For example, if the tire size aspect ratio is “70”, as shown in item “C” of the illustration, it would mean that the tire’s sidewall is 70% as high as it is wide.

D. Construction Code
A letter code is used to indicate the type of ply construction in the tire. The letter “R” means radial ply construction, the letter “D” means diagonal or bias ply construction; and the letter “B” means belted-bias ply construction.

E. Rim Diameter
Diameter of the wheel in inches.

F. Service Description
These characters represent the load range and the speed rating of a tire. The load range represents the load carrying capacity a tire is certified to carry. The speed rating is the maximum speed a tire is certified to carry a load. Speed ratings range from “A” to “Z”.

Glossary of Tire Terminology

Air Pressure:
The amount of air inside the tire pressing outward on each square inch of the tire. Air pressure is expressed in pounds per square inch (psi) or kilopascal (kPa).

Accessory Weight:
This means the combined weight of optional accessories. Some examples of optional accessories are automatic transmission, power steering, power brakes, power windows, power seats, and air conditioning.

Aspect Ratio:
The relationship of a tire’s height to its width.

Belt:
A rubber coated layer of cords that is located between the plies and the tread. Cords may be made from steel or other reinforcing materials.

Bead:
The tire bead contains steel wires wrapped by steel cords that hold the tire onto the rim.

Bias Ply Tire:
A pneumatic tire in which the plies are laid at alternate angles less than 90 degrees to the centerline of the tread.

Downloaded from www.Manualslib.com manuals search engine

SERVICE AND APPEARANCE CARE

Cold Inflation Pressure:
The amount of air pressure in a tire, measured in pounds per square inch (psi) before a tire has built up heat from driving.

Curb Weight:
This means the weight of a motor vehicle with standard and optional equipment including the maximum capacity of fuel, oil and coolant, but without passengers and cargo.

DOT Markings:
A code molded into the sidewall of a tire signifying that the tire is in compliance with the U.S. Department of Transportation motor vehicle safety standards. The DOT code includes the Tire Identification Number (TIN), an alphanumeric designator which can also identify the tire manufacturer, production plant, brand and date of production.

GVWR:
Gross Vehicle Weight Rating.
This is the maximum permissible overall weight of the fully loaded vehicle (including all occupants, accessories and cargo).

GAWR:
Gross Axle Weight Rating.
This is the maximum permissible weight on an individual axle.

Intended Outboard Sidewall:
The side of an asymmetrical tire that must always face outward when mounted on a vehicle.

Kilopascal (kPa):
The metric unit for air pressure. There are 6.9 kPa's to one psi.

Light Truck (LT-Metric) Tire:
A tire used on light duty trucks and some multipurpose passenger vehicles.

Load Index:
An assigned number ranging from 1 to 279 that corresponds to the load carrying capacity of a tire.

Maximum Inflation Pressure:
The maximum air pressure to which a cold tire may be inflated. The maximum air pressure is molded onto the sidewall.

Maximum Load Rating:
The load rating for a tire at the maximum permissible inflation pressure for that tire.

Maximum Loaded Vehicle Weight:
The sum of curb weight; accessory weight; vehicle capacity weight; and production options weight.

Normal Occupant Weight:
The number of occupants a vehicle is designed to seat multiplied by 150 pounds (68 kg).

Occupant Distribution:
Distribution of occupants in a vehicle as specified in the third column of Table 1 (shown below).

Outward Facing Sidewall:
The side of a asymmetrical tire that has a particular side that faces outward when mounted on a vehicle. The side of the tire that contains a whitewall, bears white lettering or bears manufacturer, brand and or model name molding that is higher or deeper than the same moldings on the other sidewall of the tire.

Passenger (P-Metric) Tire:
A tire used on passenger cars and some light duty trucks and multipurpose vehicles.

Production Options Weight:
The combined weight of those installed regular production options weighing over 2.3 kilograms in excess of those standard items which they replace, not previously considered in curb weight or accessory weight, including heavy duty brakes, ride levelers, roof rack, heavy duty battery, and special trim.

Recommended Inflation Pressure:
Vehicle manufacturer's recommended tire inflation pressure shown on the tire placard.

Radial Ply Tire:
A pneumatic tire in which the ply cords that extend to the beads are laid at 90 degrees to the centerline of the tread.

Rim:
A metal support for a tire and upon which the tire beads are seated.

Sidewall:
The portion of a tire between the tread and the bead.

Downloaded from www.Manualslib.com manuals search engine

Speed Rating:
An alphanumeric code assigned to a tire indicating the maximum speed at which a tire can operate.

Traction:
The friction between the tire and the road surface. The amount of grip provided.

Tread:
The portion of a tire that comes into contact with the road.

Treadwear Indicators:
Narrow bands, sometimes called "wear bars," that show across the tread of a tire when only 2/32 inch of tread remains.

UTQGS:
Uniform Tire Quality Grading Standards, a tire information system that provides consumers with ratings for a tire's traction, temperature and treadwear. Ratings are determined by tire manufacturers using government testing procedures. The ratings are molded into the sidewall of the tire.

Vehicle Capacity Weight:
The number of designated seating positions multiplied by 150 lbs (68 kg) plus the rated cargo load.

Vehicle Maximum Load on the Tire:
The load on an individual tire that is determined by distributing to each axle its share of the maximum loaded vehicle weight and dividing by two.

Vehicle Normal Load on the Tire:
The load on an individual tire that is determined by distributing to each axle its share of the curb weight, accessory weight, and normal occupant weight (distributed in accordance with Table 1 shown below) and dividing by 2.

TABLE 1 – Occupant Loading and Distribution For Vehicle Normal Load For Various Designated Seating Capacities

Designated seating capacity, number of occupants	Vehicle normal load, number of occupants	Occupant distribution in a normally loaded vehicle
2 through 4	2	2 in front
5 through 10	3	2 in front, 1 in second seat

Vehicle Placard:
A label permanently attached to a vehicle showing the original equipment tire size and recommended inflation pressure.

Tire Inflation Pressure

The Tire and Loading Information label, which is on the center pillar near the driver's door latch, shows the correct inflation pressures for your tires when they're cold. "Cold" means your vehicle has been sitting for at least three hours or driven no more than 1 mile (1.6 km). See "Loading Your Vehicle" in section 4.

Tire Pressure	195/55R15	Front	30 psi (210 kPa)
		Rear	30 psi (210 kPa)
	T125/70D15 (Temporary)	Front	60 psi (420 kPa)
		Rear	60 psi (420 kPa)

⚠ WARNING

- **Air pressures should be checked when the tires are cold or you may get inaccurate readings.**
- **Check the inflation pressure from time to time while inflating the tire gradually, until the specified pressure is obtained.**
- **Never underinflate or overinflate the tires.**
  Underinflation can cause unusual handling characteristics or can cause the rim to slip on the tire bead, resulting in an accident or damage to the tire or rim.
  Underinflation can also cause tires to overheat, leading to tire failure.
  Overinflation can cause the tire to burst, resulting in personal injury.
  Overinflation can also cause unusual handling characteristics which may result in an accident.

Downloaded from www.Manualslib.com manuals search engine

SERVICE AND APPEARANCE CARE

When to Check
Check your tires each time you fill your fuel tank or at least once a month using a tire pressure gauge.

Don't forget your compact spare tire. It should be at 60 psi (420 kPa).

How to check
Use a good quality pocket-type gauge to check tire pressure. You can't tell if your tires are properly inflated simply by looking at them. Radial tires may look properly inflated even when they're underinflated. Check the tire's inflation pressure when the tires are cold. Cold means your vehicle has been sitting for at least three hours or driven no more than 1 mile (1.6 km).

Remove the valve cap from the tire valve stem. Press the tire gauge firmly onto the valve to get a pressure measurement. If the cold tire inflation pressure is low, add air until you reach the recommended pressure.

If you overfill the tire, release air by pushing on the metal stem in the center of the tire valve. Recheck the tire pressure with the tire gauge.

Be sure to put the valve caps back on the valve stems. They help prevent leaks by keeping out dirt and moisture.

Tire Inspection and Rotation
Inspect your vehicle's tires at least once a month.
Tires should be rotated every 7,500 miles (12,000 km).

Any time you notice unusual wear, rotate your tires as soon as possible and check wheel alignment. Also check for damaged tires or wheels. See "When It Is Time for New Tires" and "Wheel Replacement" in this section for more information.

The purpose of regular rotation is to achieve more uniform wear for all tires on the vehicle. The first rotation is the most important. See "Scheduled Maintenance Services" in section 6, for scheduled rotation intervals.

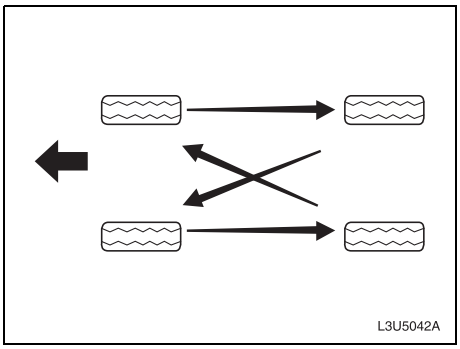

When rotating your tires, always use the correct rotation pattern shown here.

Don't include the compact spare tire in your tire rotation.

After the tires have been rotated, adjust the front and rear inflation pressures as shown on the Tire and Loading Information label. Make certain that all wheel nuts are properly tightened. See "Wheel Nut Torque" under "Capacities and Specifications" in this section.

⚠ WARNING

Rust or dirt on a wheel, or on the parts to which it is fastened, can make wheel nuts become loose after a time. The wheel could come off and cause an accident. When you change a wheel, remove any rust or dirt from places where the wheel attaches to the vehicle. In an emergency, you can use a cloth or a paper towel to do this, but be sure to use a scraper or wire brush later, if you need to, to get all the rust or dirt off. See "Changing a Flat Tire" in this section.

Vehicle Loading
The tires on your vehicle, when they are inflated to the recommended tire inflation pressure, have a load-carrying capacity that is greater than the load that will be on the tires when the vehicle is at its GVWR or GAWR limit. Never use replacement tires that have a load-carrying capacity less than the original tires on your vehicle. Tire load-carrying capacity information is

Downloaded from www.Manualslib.com manuals search engine

molded into the tire sidewall typically shown as “Max. Load”. Use of replacement tires with a lower load-carrying capacity than the original tires, or failure to keep the tires inflated to the recommended tire pressure, may reduce the GVWR or GAWR limit of your vehicle.

NOTE:
Use of replacement tires with a higher load-carrying capacity than the original tires, or using a tire inflation pressure higher than the recommended tire inflation pressure, will not increase the GVWR or GAWR limit of your vehicle.

When It Is Time for New Tires

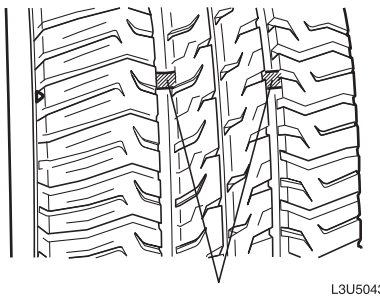

One way to tell when it’s time for new tires is to check the treadwear indicators, which will appear when your tires have only 1/16 inch (1.6 mm) or less of tread remaining.

You need a new tire if any of the following statements are true:

- You can see the indicators at three or more places around the tire.
- You can see cord or fabric showing through the tire’s rubber.
- The tread or sidewall is cracked, cut or snagged deep enough to show cord or fabric.
- The tire has a bump, bulge or split.
- The tire has a puncture, cut or other damage that can’t be repaired well because of the size or location of the damage.

Buying New Tires

To find out what kind and size of tires you need, look at the Tire and Loading Information label.

Make sure the replacements are the same size, load range, speed rating and construction type (bias, bias-belted or radial) as your original tires.

⚠ WARNING

Your SUZUKI is equipped with tires which are all the same type and size. This is important to ensure proper steering and handling of the vehicle. Never mix tires of different size or type on the four wheels of your vehicle. The size and type of tires used should be only those approved by SUZUKI Motor Corporation as standard or optional equipment for your vehicle.

⚠ WARNING

Replacing the wheels and tires equipped on your vehicle with certain combinations of aftermarket wheels and tires can significantly change the steering and handling characteristics of your vehicle. Oversized tires may also rub against the fender over bumps, causing vehicle damage or tire failure. Therefore, use only those wheel and tire combinations approved by SUZUKI Motor Corporation as standard or optional equipment for your vehicle. For information regarding the specified tires, refer to the Tire Information Label located on the driver’s side door pillar or “Tire Inflation Pressure” in this section.

Downloaded from www.Manualslib.com manuals search engine

CAUTION

Replacing the original tires with tires of a different size may result in false speedometer or odometer readings. Check with your SUZUKI dealer before purchasing replacement tires that differ in size from the original tires.

Uniform Tire Quality Grading

Quality grades can be found where applicable on the tire sidewall between the tread shoulder and the maximum section width. For example:

Treadwear 200 Traction AA Temperature A

The following information relates to the system developed by the United States National Highway Traffic Safety Administration, which grades tires by treadwear, traction and temperature performance. (This applies only to vehicles sold in the United States.) The grades are molded on the sidewalls of most passenger car tires. The Uniform Tire Quality Grading system does not apply to deep tread, winter-type snow tires, space-saver or temporary use spare tires, tires with nominal rim diameters of 10 to 12 inches (25 to 30 cm), or to some limited-production tires.

While the tires available on SUZUKI vehicles may vary with respect to these grades, they all conform to federal safety requirements.

Treadwear

The treadwear grade is a comparative rating based on the wear rate of the tire when tested under controlled conditions on a specified government test course. For example, a tire graded 150 would wear one and a half (1.5) times as well on the government course as a tire graded 100. The relative performance of tires depends upon the actual conditions of their use, however, and may depart significantly from the norm due to variations in driving habits, service practices and differences in road characteristics and climate.

Traction – AA, A, B, C

The traction grades, from highest to lowest, are AA, A, B, and C. Those grades represent the tire's ability to stop on wet pavement as measured under controlled conditions on specified government test surfaces of asphalt and concrete. A tire marked C may have poor traction performance.

⚠ WARNING

The traction grade assigned to this tire is based on straight-ahead braking traction tests, and does not include acceleration, cornering, hydroplaning, or peak traction characteristics.

Temperature – A, B, C

The temperature grades are A (the highest), B, and C, representing the tire's resistance to the generation of heat and its ability to dissipate heat when tested under controlled conditions on a specified indoor laboratory test wheel. Sustained high temperature can cause the material of the tire to degenerate and reduce tire life, and excessive temperature can lead to sudden tire failure. The grade C corresponds to a level of performance which all passenger car tires must meet under the Federal Motor Vehicle Safety Standard No.109. Grades B and A represent higher levels of performance on the laboratory test wheel than the minimum required by law.

⚠ WARNING

The temperature grade for this tire is established for a tire that is properly inflated and not overloaded. Excessive speed, underinflation, or excessive loading, either separately or in combination, can cause heat buildup and possible tire failure.

Wheel Alignment and Tire Balance

The wheels on your vehicle were aligned and balanced carefully at the factory to give you the longest tire life and best overall performance.

Scheduled wheel alignment and wheel balancing are not needed. However, if you notice unusual tire wear or your vehicle

Downloaded from www.Manualslib.com manuals search engine

pulling one way or the other, the alignment may need to be reset. If you notice your vehicle vibrating when driving on a smooth road, your wheels may need to be rebalanced.

Wheel Replacement

Replace any wheel that is bent, cracked or badly rusted or corroded. If wheel nuts keep coming loose, the wheel, wheel bolts and wheel nuts should be replaced. If the wheel leaks air, replace it (except some aluminum wheels, which can sometimes be repaired). See your dealer if any of these conditions exist.
Your dealer will know the kind of wheel you need.

Each new wheel should have the same load-carrying capacity, diameter, width, offset and be mounted the same way as the one it replaces.

If you need to replace any of your wheels, wheel bolts or wheel nuts, replace them only with new SUZUKI original equipment parts. This way, you will be sure to have the right wheel, wheel bolts and wheel nuts for your vehicle.

⚠ WARNING

Using the wrong replacement wheels, wheel bolts or wheel nuts on your vehicle can be dangerous. It could affect the braking and handling of your vehicle, make your tires lose air and make you lose control. You could have a collision in which you or others could be injured. Always use the correct wheel, wheel bolts and wheel nuts for replacement.

CAUTION

The wrong wheel can also cause problems with bearing life, brake cooling, speedometer or odometer calibration, headlamp aim, bumper height, vehicle ground clearance and tire or tire chain clearance to the body and chassis.

See “Changing a Flat Tire” in this section for more information.

Used Replacement Wheels

⚠ WARNING

Putting a used wheel on your vehicle is dangerous. You can’t know how it’s been used or how far it’s been driven. It could fail suddenly and cause a crash. If you have to replace a wheel, use a new SUZUKI original equipment wheel.

Tire Chains

CAUTION

Use tire chains only where legal and only when you must. Use only SAE class “S” type chains that are the proper size for your tires. Install them on the front tires and tighten them as tightly as possible with the ends securely fastened. Drive slowly and follow the chain manufacturer’s instructions. If you can hear the chains contacting your vehicle, stop and retighten them. If the contact continues, slow down until it stops. Driving too fast or spinning the wheels with chains on will damage your vehicle.

If a Tire Goes Flat

It’s a unusual for a tire to “blowout” while you’re driving, especially if you maintain your tire properly. If air goes out of a tire,

Downloaded from www.Manualslib.com manuals search engine

it's much more likely to leak out slowly. But if you should ever have a "blowout", here are a few tips about what to expect and what to do:

If a front tire fails, the flat tire will create a drag that pulls the vehicle toward that side. Take your foot off the accelerator pedal and grip the steering wheel firmly. Steer to maintain lane position, and then gently brake to a stop well out of the traffic lane.

A rear blowout, particularly on a curve, acts much like a skid and may require the same correction you'd use in a skid. In any rear blowout, remove your foot from the accelerator pedal. Get the vehicle under control by steering the way you want the vehicle to go. It may be very bumpy and noisy, but you can still steer. Gently brake to a stop, well off the road if possible.

⚠ WARNING

Lifting a vehicle and getting under it to do maintenance or repairs is dangerous without the appropriate safety equipment and training. The jack provided with your vehicle is designed only for changing a flat tire. If it is used for anything else, you or others could be badly injured or killed if the vehicle slips off the jack. Use the jack provided with your vehicle only for changing a flat tire.

If a tire goes flat, the next part shows how to use your jacking equipment to change a flat tire safely.

Changing a Flat Tire

If a tire goes flat, avoid further tire and wheel damage by driving slowly to a level place. Turn on your hazard warning flashers.

⚠ WARNING

Changing a tire can cause an injury. The vehicle can slip off the jack and roll over you or other people. You and they could be severely injured. Find a level place to change your tire. To help prevent the vehicle from moving:

1) Set the parking brake firmly.
2) Put an automatic transmission shift lever in PARK (P), or shift a manual transmission to FIRST (1) or REVERSE (R).
3) Turn off the engine and do not restart while the vehicle is raised.
4) Do not allow passengers to remain in the vehicle.

To be even more certain the vehicle won't move, you should put blocks at the front and rear of the tire farthest away from the one being changed. That would be the tire on the other side, at the opposite end of the vehicle.

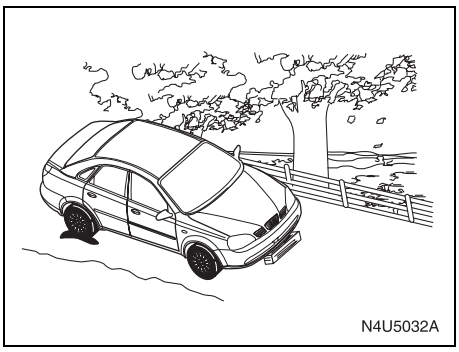

The following steps will tell you how to use the jack to change a tire.

Downloaded from www.Manualslib.com manuals search engine

Removing the Spare Tire and Tools

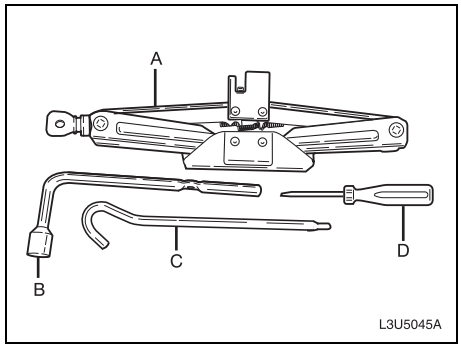

A. Jack
B. Wrench
C. Jack Handle
D. Screwdriver

The compartment spare tire and tools you'll need are located in the trunk.

⚠ WARNING

Only use the jack for lifting this car during an emergency tire change.

1) Remove the trim cover from the floor of the cargo area by pulling up on the tab.
2) Remove the foam tray that contains the tools.
3) Turn the retainer on the compact spare tire counterclockwise and remove the retainer.
4) Remove the compact spare tire. See "Compact Spare Tire" in this section for more information.
5) Remove the jack, jack handle and the wheel wrench. The jack is located in the cargo area. Turn the jack retainer, located on the right side of the jack, counterclockwise to release it. The jack handle and the wheel wrench are located inside the foam tray.

Removing the Flat Tire and Installing the Spare Tire

1) If your vehicle is equipped with wheel covers, loosen the 4 plastic caps by hand with the aid of the wheel wrench and remove the wheel cover.
2) Then use the wheel wrench to loosen all the wheel nuts. Don't remove them yet.

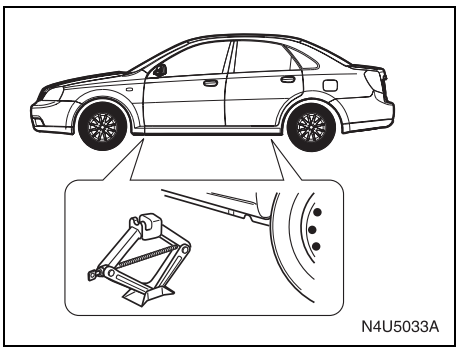

3) Near each wheel well is a notch in the frame which the jack head fits in.
   Position the jack and raise the jack head until it fits firmly into the notch in the vehicle's frame nearest the flat tire. Put the compact spare tire near you.

⚠ WARNING

Getting under a vehicle when it is jacked up is dangerous. If the vehicle slips off the jack you could be badly injured or killed. Never get under a vehicle when it is supported only by a jack.

Downloaded from www.Manualslib.com manuals search engine

SERVICE AND APPEARANCE CARE

⚠ WARNING

Raising your vehicle with the jack improperly positioned can damage the vehicle and even make the vehicle fall. To help avoid personal injury and vehicle damage, be sure to fit the jack lift head into the proper location before raising the vehicle.

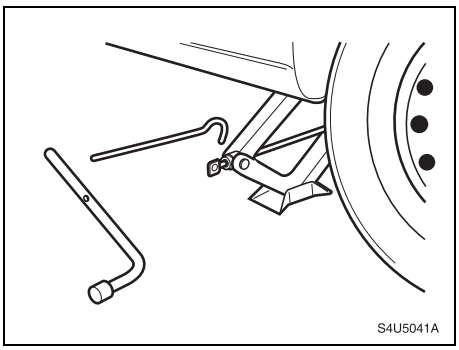

4) Insert the jack handle and the wheel wrench into the jack.
5) Raise the vehicle by turning the jack handle clockwise. Raise the vehicle far enough off the ground so there is enough room for the compact spare tire to fit underneath the wheel well.
6) Remove all of the wheel nuts by turning them counterclockwise.
7) Remove the flat tire.

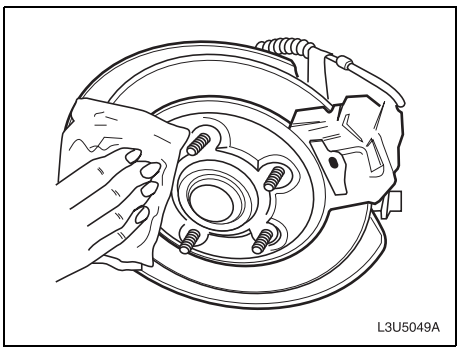

8) Remove any rust or dirt from the wheel bolts, mounting surfaces and spare wheel.

⚠ WARNING

Rust or dirt on the wheel, or on the parts to which it is fastened, can make the wheel nuts become loose after a time. The wheel could come off and cause an accident. When you change a wheel, remove any rust or dirt from the places where the wheel attaches to the vehicle. In an emergency, you can use a cloth or a paper towel to do this, but be sure to use a scraper or wire brush later, if you need to, to get all the rust or dirt off.

⚠ WARNING

Never use oil or grease on studs or nuts. If you do, the nuts might come loose. Your wheel could fall off, causing a serious accident.

9) Place the compact spare tire on the wheel-mounting surface.
10) Reinstall the wheel nuts with the rounded end of the nuts toward the wheel. Tighten each wheel nut by turning it clockwise with your hand until the wheel is held against the hub.
11) Lower the vehicle by turning the wheel handle counterclockwise. Lower the jack completely.

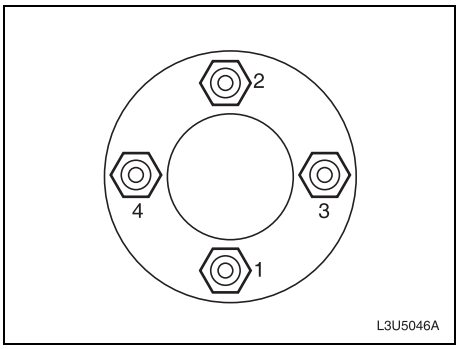

12) Tighten the wheel nuts firmly in a criss-cross sequence as shown.

Downloaded from www.Manualslib.com manuals search engine

⚠ WARNING

Incorrect wheel nuts or improperly tightened wheel nuts can cause the wheel to come loose and even come off. This could lead to an accident. Be sure to use the correct wheel nuts. If you have to replace them, be sure to get new SUZUKI original equipment wheel nuts. Stop somewhere as soon as you can and have the nuts tightened with a torque wrench to the proper torque specification. See "Capacities and Specifications" in the Index for the wheel nut torque specification.

CAUTION

Improperly tightened wheel nuts can lead to brake pulsation and rotor damage. To avoid expensive brake repairs, evenly tighten the wheel nuts in the proper sequence and to the proper torque specification. See "Capacities and Specifications" in the index for the wheel nut torque specification.

Don't try to put a wheel cover on your compact spare tire. It won't fit. Store the wheel cover in the trunk until you have the flat tire repaired or replaced.

CAUTION

If you install a full-size tire rather than your compact spare tire, reinstall the wheel cover as follows:

1) Put the wheel cover on the full-size tire.
2) Fasten the 4 plastic caps snugly by hand.
3) Tighten the caps by turning them an additional 90° with the wheel wrench.
– The proper tightening torque is a maximum of 5.9 lb-ft (8 N·m).
– Tightening to the improper torque can cause damage to the plastic caps.

CAUTION

Wheel covers will not fit on your compact spare. If you try to put a wheel cover on the compact spare, you could damage the cover or the spare.

Storing the Flat Tire and Tools

⚠ WARNING

Improperly storing a jack, a tire, or other equipment in the passenger compartment of the vehicle could cause injury. In a sudden stop or collision, loose equipment could strike someone. Store all these items in the proper place.

Store the flat tire in the compact spare tire compartment. Place the tire in the compartment, then secure the retainer. Store the jack in its housing in the cargo area. Secure the jack by turning the retainer clockwise. Store the tools securely in the foam tray and place the tray on top of the tire. Replace the trim cover.

⚠ WARNING

Storing a jack, a tire, or other equipment in the passenger compartment of the vehicle could cause injury. In a sudden stop or collision, loose equipment could strike someone. Store all these in the proper place.

Storing the Spare Tire and Tools

The compact spare tire is for temporary use only. Replace the compact spare tire with a full-size tire as soon as you can. See "Compact Spare Tire" in this section.

Downloaded from www.Manualslib.com manuals search engine

Compact Spare Tire

Although the compact spare tire was fully inflated when your vehicle was new, it can lose air after a time. Check the inflation pressure regularly. It should be 60 psi (420 kPa).

After installing the compact spare tire on your vehicle, you should stop as soon as possible and make sure your compact spare tire is correctly inflated. The compact spare tire is made to perform well at speeds up to 50 mph (80 km/h), so you can finish your trip and have your full-size tire repaired or replaced where you want. Of course, it's best to replace your spare with a full-size tire as soon as you can. Your spare will last longer and be in good shape in case you need it again.

CAUTION

When the compact spare tire is installed, don't take your vehicle through an automatic car wash with guide rails. The compact spare can get caught on the rails. That can damage the tire and wheel, and maybe other parts of your vehicle.

Don't use your compact spare tire on other vehicles.

And don't mix your compact spare tire or wheel with other wheels or tires. They won't fit. Keep your compact spare tire and its wheel together.

CAUTION

Tire chains won't fit your compact spare tire. Using them can damage your vehicle and can damage the chains too. Don't use tire chains on your compact spare.

⚠ WARNING

The compact spare tire and wheel are intended for temporary emergency use only. Continuous use of the compact spare tire can result in tire failure and loss of control. Always observe these precautions when using the compact spare tire:

- **Your vehicle will handle differently with this temporary spare.**
- **Do not exceed 80 km/h (50 mph) speed.**
- **Replace the compact spare tire with a standard tire and wheel as soon as possible.**
- **Use of the compact spare tire will reduce ground clearance.**
- **Recommended air pressure for the compact spare tire is 420 kPa (60 psi).**

(Continued)

⚠ WARNING

(Continued)

- **Do not use tire chains on the compact spare tire. If you must use tire chains, rearrange the wheels so standard tires and wheels are fitted to the front axle.**
- **The compact spare tire has a much shorter tread life than the conventional tires on your vehicle. Replace the tire as soon as the tread wear indicator appears.**
- **When replacing the compact spare tire, use a replacement tire with the exact same size and construction.**

Downloaded from www.Manualslib.com manuals search engine

Appearance Care

Remember, cleaning products can be hazardous. Some are toxic. Others can burst into flames if you strike a match or get them on a hot part of the vehicle. Some are dangerous if you breathe their fumes in a closed space. When you use anything from a container to clean your vehicle, be sure to follow the manufacturer's warnings and instructions. And always open your doors or windows when you are cleaning the inside.

Never use these to clean your vehicle:

- Gasoline
- Benzene
- Naphtha
- Carbon Tetrachloride
- Acetone
- Paint Thinner
- Turpentine
- Lacquer Thinner
- Nail Polish Remover

They can all be hazardous – some more than others – and they can all damage your vehicle, too.

Do not use any of these unless this manual says you can. In many uses, these will damage your vehicle:

- Alcohol
- Laundry Soap
- Bleach
- Reducing Agents

Cleaning the Inside of Your Vehicle

Use a vacuum cleaner often to get rid of dust and loose dirt. Wipe vinyl, leather, plastic and painted surfaces with a clean, damp cloth.

Cleaning Fabric/Carpet

Your dealer has cleaners for the cleaning of fabric and carpet. They will clean normal spots and stains very well.

You can get SUZUKI approved cleaning products from your dealer. See "Vehicle Care/Appearance Materials" later in this section.

Here are some cleaning tips:

- Always read the instructions on the cleaner label.
- Clean up stains as soon as you can – before they set.
- Carefully scrape off any excess stain.
- Use a clean cloth or sponge, and change to a clean area often. A soft brush may be used if stains are stubborn.
- If a ring forms on fabric after spot cleaning, clean the entire area immediately or it will set.

Using Cleaner on Fabric

1) Vacuum and brush the area to remove any loose dirt.
2) Always clean a whole trim panel or section. Mask surrounding trim along stitch or welt lines.
3) Follow the directions on the container label.
4) Apply cleaner with a clean sponge. Don't saturate the material and don't rub it roughly.
5) As soon as you've cleaned the section, use a sponge to remove any excess cleaner.
6) Wipe cleaned area with a clean, water-dampened towel or cloth.
7) Wipe with a clean cloth and let dry.

Specific Fabric Cleaning Problems

Stains caused by such things as catsup, coffee (black), egg, fruit, fruit juice, milk, soft drinks, vomit, urine and blood can be removed as follows:

1) Carefully scrape off excess stain, then sponge the soiled area with cool water.
2) If a stain remains, follow the cleaner instructions described earlier.
3) If an odor lingers after cleaning vomit or urine, treat the area with a water/baking soda solution: 1 teaspoon (5 ml) of baking soda to 1 cup (250 ml) of lukewarm water.
4) Let dry.

Downloaded from www.Manualslib.com manuals search engine

SERVICE AND APPEARANCE CARE

Stains caused by candy, ice cream, mayonnaise, chili sauce and unknown stains can be removed as follows:

1) Carefully scrape off excess stain.
2) First, clean with cool water and allow to dry completely.
3) If a stain remains, follow the cleaner instructions described earlier.

Cleaning Vinyl
Use warm water and a clean cloth.

- Rub with a clean, damp cloth to remove dirt. You may have to do this more than once.
- Things like tar, asphalt and shoe polish will stain if you don't get them off quickly. Use a clean cloth and vinyl cleaner. See your dealer for this product.

Cleaning Leather
Use a soft cloth with lukewarm water and a mild soap or saddle soap and wipe dry with a soft cloth. Then, let the leather dry naturally. Do not use heat to dry.

- For stubborn stains, use a leather cleaner.
- Never use oils, varnishes, solvent-based or abrasive cleaners, furniture polish or shoe polish on leather.
- Soiled or stained leather should be cleaned immediately. If dirt is allowed to work into the finish, it can harm the leather.

Cleaning the Top of the Instrument Panel
Use only mild soap and water to clean the top surfaces of the instrument panel. Sprays containing silicones or waxes may cause annoying reflections in the windshield and even make it difficult to see through the windshield under certain conditions.

Cleaning Interior Plastic Components
Use only a mild soap and water solution on a soft cloth or sponge. Commercial cleaners may affect the surface finish.

Cleaning Glass Surfaces
Glass should be cleaned often. Glass Cleaner or a liquid household glass cleaner will remove normal tobacco smoke and dust films on interior glass. See "Vehicle Care/Appearance Materials" later in this section.

CAUTION

Don't use abrasive cleaners on glass, because they may cause scratches. Avoid placing decals on the inside rear window, since they may have to be scraped off later. If abrasive cleaners are used on the inside of the rear window, an electric defogger element may be damaged. Any temporary license should not be attached across the defogger grid.

Care of Safety Belts
Keep belts clean and dry.

⚠ WARNING

Do not bleach or dye safety belts. If you do, it may severely weaken them. In a crash, they might not be able to provide adequate protection. Clean safety belts only with mild soap and lukewarm water.

Weatherstrips
Silicone grease on weatherstrips will make them last longer, seal better, and not stick or squeak. Apply silicone grease with a clean cloth at least every six months. During very cold, damp weather more frequent application may be required.

Cleaning the Outside of Your Vehicle
The paint finish on your vehicle provides beauty, depth of color, gloss retention and durability.

Washing Your Vehicle
The best way to preserve your vehicle's finish is to keep it clean by washing it often with lukewarm or cold water.

Don't wash your vehicle in the direct rays of the sun. Use a car washing soap. Don't use strong soaps or chemical detergents. Be sure to rinse the vehicle well, removing all soap residue completely. You can get approved cleaning products from your

Downloaded from www.Manualslib.com manuals search engine

dealer. See “Vehicle Care/Appearance Materials” later in this section. Don’t use cleaning agents that are petroleum based, or that contain acid or abrasives. All cleaning agents should be flushed promptly and not allowed to dry on the surface, or they could stain. Dry the finish with a soft, clean chamois or an all-cotton towel to avoid surface scratches and water spotting.

High pressure car washes may cause water to enter your vehicle.

Cleaning Exterior Lamps/Lenses
Use only lukewarm or cold water, a soft cloth and a car washing soap to clean exterior lamps and lenses. Follow instructions under Washing Your Vehicle.

Finish Care
Occasional waxing or mild polishing of your vehicle by hand may be necessary to remove residue from the paint finish. You can get SUZUKI-approved cleaning products from your dealer. See “Vehicle Care/Appearance Materials” later in this section.

Your vehicle has a “basecoat/clearcoat” paint finish. The clearcoat gives more depth and gloss to the colored basecoat. Always use waxes and polishes that are non-abrasive and made for a basecoat/clearcoat paint finish.

CAUTION

Machine compounding or aggressive polishing on a basecoat/clearcoat paint finish may dull the finish or leave swirl marks.

Foreign materials such as calcium chloride and other salts, ice melting agents, road oil and tar, tree sap, bird droppings, chemicals from industrial chimneys, etc., can damage your vehicle’s finish if they remain on painted surfaces. Wash the vehicle as soon as possible. If necessary, use non-abrasive cleaners that are marked safe for painted surfaces to remove foreign matter.

Exterior painted surfaces are subject to aging, weather and chemical fallout that can take their toll over a period of years. You can help to keep the paint finish looking new by keeping your vehicle garaged or covered whenever possible.

Cleaning Windshield and Wiper Blades
If the windshield is not clear after using the windshield washer, or if the wiper blade chatters when running, wax, sap or other material may be on the blade or windshield.

Clean the outside of the windshield with a full-strength glass cleaning liquid. The windshield is clean if beads do not form when you rinse it with water.

Grime from the windshield will stick to the wiper blades and affect their performance. Clean the blades by wiping vigorously with a cloth soaked in full-strength windshield washer solvent. Then rinse the blades with water.

Check the wiper blades and clean them as necessary; replace blades that look worn.

Cleaning Aluminum Wheels
Keep your wheels clean using a soft clean cloth with mild soap and water. Rinse with clean water. After rinsing thoroughly, dry with a soft clean towel. A wax may then be applied.

The surface of these wheels is similar to the painted surface of your vehicle. Don’t use strong soaps, chemicals, abrasive polishes, abrasive cleaners, cleaners with acid, or abrasive cleaning brushes on them because you could damage the surface. Do not use chrome polish on aluminum wheels.

Don’t take your vehicle through an automatic car wash that has silicone carbide tire cleaning brushes. These brushes can also damage the surface of these wheels.

Cleaning Tires
To clean your tires, use a stiff brush with tire cleaner.

Downloaded from www.Manualslib.com manuals search engine

SERVICE AND APPEARANCE CARE

CAUTION

When applying a tire dressing, always take care to wipe off any overspray or splash from all painted surfaces on the body or wheels of the vehicle. Petroleum-based products may damage the paint finish and tires.

Sheet Metal Damage

If your vehicle is damaged and requires sheet metal repair or replacement, make sure the body repair shop applies anti-corrosion material to parts repaired or replaced to restore corrosion protection.

Original manufacturer replacement parts will provide the corrosion protection while maintaining the warranty.

Finish Damage

Any stone chips, fractures or deep scratches in the finish should be repaired right away. Bare metal will corrode quickly and may develop into major repair expense.

Minor chips and scratches can be repaired with touch-up materials available from your dealer. Larger areas of finish damage can be corrected in your dealer's body and paint shop.

Underbody Maintenance

Chemicals used for ice and snow removal and dust control can collect on the underbody. If these are not removed, accelerated corrosion (rust) can occur on the underbody parts such as fuel lines, frame, floor pan and exhaust system even though they have corrosion protection.

At least every spring, flush these materials from the underbody with plain water. Clean any areas where mud and debris can collect. Dirt packed in close areas of the frame should be loosened before being flushed. Your dealer or an underbody car washing system can do this for you.

Chemical Paint Spotting

Some weather and atmospheric conditions can create a chemical fallout. Airborne pollutants can fall upon and attack painted surfaces on your vehicle. This damage can take two forms: blotchy, ring-shaped discolorations, and small, irregular dark spots etched into the paint surface.

Vehicle Care/Appearance Materials

See your dealer for more information on purchasing the following products.

Description	Usage
Polishing Cloth Wax-Treated	Interior and exterior polishing cloth.
Tar and Road Oil Remover	Removes tar, road oil and asphalt.
Chrome Cleaner and Polish	Use on chrome or stainless steel.
White Side-wall Tire Cleaner	Removes soil and black marks from whitewalls.
Vinyl Cleaner	Cleans vinyl tops, upholstery and convertible tops.
Glass Cleaner	Removes dirt, grime, smoke and fingerprints.
Chrome and Wire Wheel Cleaner	Removes dirt and grime from chrome wheels and wire wheel covers.
Finish Enhancer	Removes dust, fingerprints, and surface contaminants, Spray on wipe off.

Downloaded from www.Manualslib.com manuals search engine

Appearance Care:
Vehicle Identification:
Electrical System:

Description	Usage
Swirl Remover Polish	Removes swirl marks, fine scratches and other light surface contamination.
Cleaner Wax	Removes light scratches and protects finish.
Foaming Tire Shine Low Gloss	Cleans, shines and protects in one easy step, no wiping necessary.
Wash Wax Concentrate	Medium foaming shampoo. Cleans and lightly waxes. Biodegradable and phosphate free.
Spot Lifter	Quickly and easily removes spots and stains from carpets, vinyl and cloth upholstery.
Odor Eliminator	Odorless spray odor eliminator used on fabrics, vinyl, leather and carpet.
See your SUZUKI parts department for these products.	

Vehicle Identification

Vehicle Identification Number (VIN)

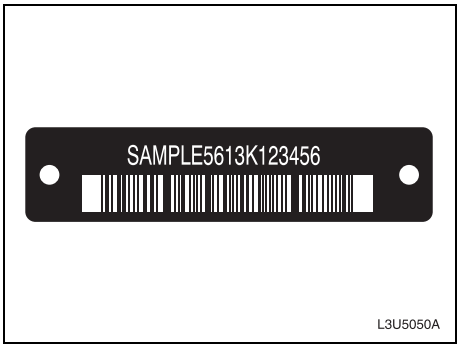

This is the legal identifier for your vehicle. It appears on a plate in the front corner of the instrument panel, on the driver's side. You can see it if you look through the windshield from outside your vehicle. The VIN also appears on the Vehicle Certification and Service Parts labels and the certificates of title and registration.

Engine Identification

The 8th character in your VIN is the engine code. This code will help you identify your engine, specifications and replacement parts.

Electrical System

Add-On Electrical Equipment

CAUTION

Don't add anything electrical to your vehicle unless you check with your dealer first. Some electrical equipment can damage your vehicle and the damage wouldn't be covered by your warranty. Some add-on electrical equipment can keep other components from working as they should.

Your vehicle has an air bag system. Before attempting to add anything electrical to your vehicle, see "Servicing Your Air Bag-Equipped Vehicle" in section 1.

Headlamp Wiring

The headlamp wiring is protected by fuses, one for each headlamp, in the fuse block. An electrical overload will cause the lamps to turn off. If this happens, have your headlamp wiring checked right away.

Windshield Wiper Fuses

The windshield wiper motor is protected by an internal circuit breaker and a fuse. If the motor overheats due to heavy snow, etc., the wiper will stop until the motor cools. If the overload is caused by some electrical problem and not snow, etc., be sure to get it fixed.

Downloaded from www.Manualslib.com manuals search engine

SERVICE AND APPEARANCE CARE

Power Windows and Other Power Options

Circuit breakers in the fuse block protect the power windows and other power accessories. When the current load is too heavy, the circuit breaker opens, protecting the circuit until the problem is fixed or goes away.

Fuses and Circuit Breakers

The wiring circuits in your vehicle are protected from short circuits by a combination of fuses, circuit breakers and fusible thermal links in the wiring itself.

Look at the silver-colored band inside the fuse. If the band is broken or melted, replace the fuse. Be sure you replace a bad fuse with a new one of the identical size and rating.

There are spare fuses provided in the engine compartment fuse block. If you ever have a problem on the road and don't have a spare fuse, you can borrow one that has the same amperage. Just pick a feature of your vehicle that you can get along without – like the radio or cigarette lighter – and use its fuse, if it is the correct amperage. Replace it as soon as you can.

There are two fuse blocks in your vehicle: the instrument panel fuse block and the engine compartment fuse block.

There is a fuse puller located on the engine compartment fuse block. It can be used to easily remove fuses from the fuse block.

Instrument Panel Fuse Block

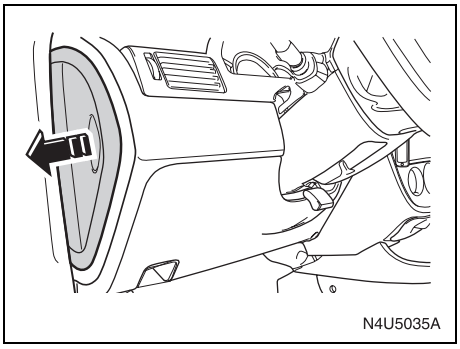

The instrument panel fuse block is located on the end of the instrument panel on the driver's side of the vehicle. To access the fuses, open the fuse panel door by pulling the door out.

To reinstall the door, first insert the rear edge of the fuse panel door, then push the front of the door into the end of the instrument panel to secure it.

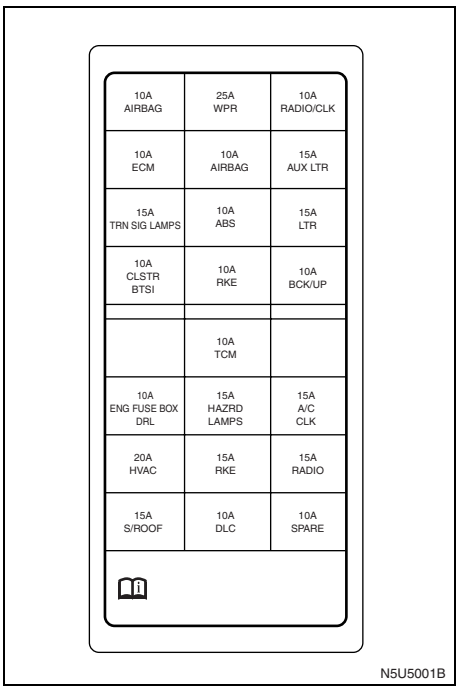

10A AIRBAG	25A WPR	10A RADIO/CLK
10A ECM	10A AIRBAG	15A AUX LTR
15A TRN SIG LAMPS	10A ABS	15A LTR
10A CLSTR BTSI	10A RKE	10A BCK/UP
	10A TCM	
10A ENG FUSE BOX DRL	15A HAZRD LAMPS	15A A/C CLK
20A HVAC	15A RKE	15A RADIO
15A S/ROOF	10A DLC	10A SPARE

N5U5001B

Downloaded from www.Manualslib.com manuals search engine

Fuses	Usages
AIRBAG	Air Bag
WPR	Wiper
RADIO/CLK	Radio/Clock
ECM	Engine Control Module
AIRBAG	Occupation Classification Sensor
AUX LTR	Extra Jack
TRN SIG LAMPS	Turn Signal Lamps
ABS	Antilock Brake System
LTR	Cigar Lighter
CLSTR, BTSI	Cluster, BTSI Solenoid
RKE	Remote keyless Entry
BCK/UP	Back-up
BLANK	Not Used
TCM	Transmission Control Module

Fuses	Usages
ENG FUSE BOX, DRL	Engine Fuse box, Daytime Running Light
HAZRD LAMPS	Hazard Lamps
A/C, CLK	A/C Switch, Clock
HVAC	Heating, Ventilation and Air Conditioning
RKE	Remote Keyless Entry
RADIO	Radio
S/ROOF	Sunroof
DLC	Data link Connector
SPARE	Spare

Engine Compartment Fuse Block

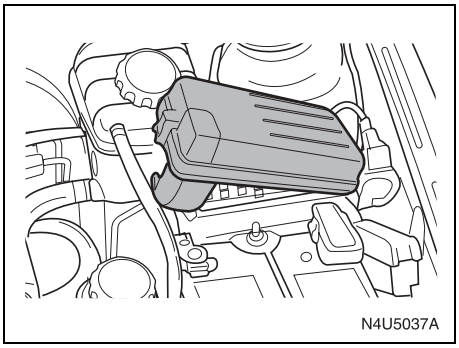

The engine compartment fuse block is located on the driver's side of the vehicle, near the battery. See "Engine Compartment Overview" in this section for more information on location.

To access the fuses, press in the side flaps to release the cover.

To reinstall the cover, push until it is secure.

Downloaded from www.Manualslib.com manuals search engine

SERVICE AND APPEARANCE CARE

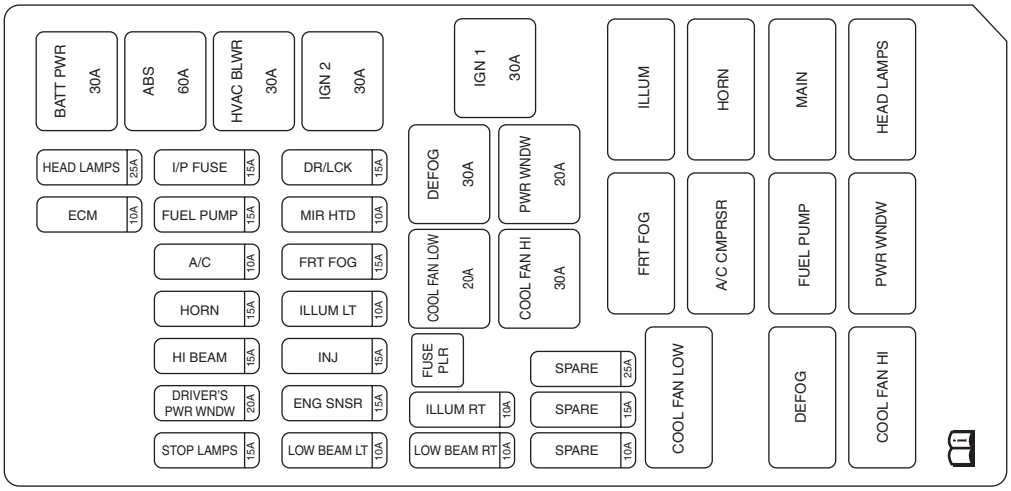

Downloaded from www.Manualslib.com manuals search engine

Fuses	Usages
HEAD LAMPS	Head Lamp
ECM	Engine Control Module
I/P FUSE	Instrument Panel Fuse
FUEL PUMP	Fuel Pump
A/C	Air Conditioning
HORN	Horn
HI BEAM	Head Lamp High-Beam
DRIVER'S PWR WNDW	Driver's Power Window
STOP LAMPS	Stop Lamps
DR/LCK	Door Lock
MIR HTD	Heated Mirror
FRT FOG	Front Fog
ILLUMLT	License Plate Lamp, Parking Lamp Left
INJ	Injector
ENG SNSR	EVAP Canister Purge Solenoid, HO2S, Cooling Fan Relay, CMP Sensor

Fuses	Usages
LOW BEAM LT	Head Lamp Low-Beam Left
ILLUM RT	Illumination Circuit, Parking Lamp Right
LOW BEAM RT	Head Lamp Low-Beam Right
SPARE	Spare
SPARE	Spare
SPARE	Spare
BATT PWR	Battery Power
ABS	Antilock Brake System
HVAC BLWR	HVAC Blower
IGN 2	Ignition 2
IGN 1	Ignition 1
FUSE PLR	Fuse Puller
COOL FAN LOW	Cooling Fan Low
DEFOG	Defog
COOL FAN HI	Cooling Fan High
PWR WNDW	Power Window

Relays	Usages
COOL FAN LOW	Cooling Fan Low
FRT FOG	Front Fog
ILLUM	Illumination Relay
A/C CMPRSR	Air Conditioning Compressor
HORN	Horn
DEFOG	Defog
FUEL PUMP	Fuel Pump
MAIN	Main Relay
COOL FAN HI	Cooling Fan High
PWR WNDW	Power Window
HEAD LAMPS	Headlamp Relay

Downloaded from www.Manualslib.com manuals search engine

Capacities and Specifications

The following approximate capacities are given in English and metric conversions.

Capacities

Application	Capacities	
	English	Metric
Air Conditioning Refrigerant R-134a	1.41 lbs	0.64 kg
Brake/Clutch Fluid	0.53 quarts	0.5 L
Engine Coolant	7.9 quarts	7.4 L
Engine Oil with Filter	4.2 quarts	4.0 L
Fuel Tank	14.5 gallons	55.0 L
Power Steering Fluid	1.2 quarts	1.1 L
Automatic Transmission Fluid (Complete Overhaul)	7.3 ± 0.2 quarts	6.9 ± 0.2 L
Manual Transmission Fluid (Complete Drain and Refill)	1.9 quarts	1.8 L
Wheel Nut Torque	81 lb-ft	110 N.m
All capacities are approximate. When adding, be sure to fill to the approximately level, as recommended in this manual.		

Specifications

Engine

Engine		2.0 L DOHC (L6)
VIN Code		Z
Type		4-Cylinder / In-Line
Valve Train		DOHC 16 Valve
Displacement		121.9 in^3 (1,998 cc)
Bore x stroke		3.39 in x 3.39 in (86 mm x 86 mm)
Compression Ratio		9.6 : 1
Octane Rating		87 (Ron 91) or higher
Spark plug	Type	FLR8LDCU
	Gap	0.039 in (1.0 mm)
Battery	Rating	12V – 55AH
	Cold Cranking Ampere	610 CCA

Chassis

Front Suspension Type		McPherson Strut Type
Rear Suspension Type		Dual Link Type
Alignment (Curb Weight)	Front Camber	–0°33’ ± 45’
	Rear Camber	–1°00’ ± 45’
	Caster	4°00’ ± 45’
	Front Toe-in	0°00’ ± 10’
	Rear Toe-in	0°12’ ± 10’

Downloaded from www.Manualslib.com manuals search engine

Capacities and Specifications:

Dimension

Overall Length		169.1 in (4,295 mm)
Overall Width		67.9 in (1,725 mm)
Overall Height		56.9 in (1,445 mm)
Wheel Base		102.4 in (2,600 mm)
Tread	Front	58.3 in (1,480 mm)
	Rear	58.3 in (1,480 mm)
Minimum Ground Clearance		6.3 in (160 mm)

Weight

Gross Vehicle Weight Rating	See the safety certification label and the tire information label which are located on the driver's door lock pillar.

Downloaded from www.Manualslib.com manuals search engine

MEMO

Downloaded from www.Manualslib.com manuals search engine

MAINTENANCE SCHEDULE

General Information 6-1
Maintenance 6-2

Downloaded from www.Manualslib.com manuals search engine

General Information

NOTICE (for U.S.A.)
Maintenance, replacement or repair of the emission control devices and systems may be performed by any automobile repair establishment or individual using any part which has been certified under the provisions in the Clean Air Act sec. 207. (a) (2).

This section provides the maintenance schedule which is necessary to ensure that your vehicle gives many years of satisfying motoring.

You are responsible for properly operating and maintaining your vehicle in accordance with the instructions described in this manual. Failure to do so is likely to result in the denial of warranty coverage.

It is your responsibility to properly maintain and operate your vehicle. Be sure that you follow the periodic required maintenance schedule and general operation instructions in this manual.

It is also your responsibility to keep records and receipts as proof of regular maintenance. Records and receipts together with this owner's manual should be transferred to any subsequent owner.

You may have maintenance services performed on your vehicle by any qualified person or facility. However, it is recommended that the maintenance services be performed by an authorized SUZUKI dealer who will have well-trained technicians and genuine parts.

Non-SUZUKI genuine parts and accessories have not been examined or approved by SUZUKI. SUZUKI can certify neither the suitability nor the safety of non-SUZUKI parts and accessories and is not liable for damage caused by their use.

Inadequate, incomplete, or insufficient servicing may result in operational problems with your vehicle that could even lead to vehicle damage, an accident, or personal injury.

Selecting the Right Condition

First you'll need to decide which of the two conditions is right for your vehicle. Here's how to decide which condition to follow.

You should follow the required maintenance schedule for the condition that best describes your driving.

Normal Condition

The normal condition for driving means driving under typical, everyday driving conditions. You may follow the ordinary maintenance schedule.

Severe Condition

If the vehicle is operated under any of the following conditions, some of the maintenance schedule items need to be serviced more frequently. See "Maintenance Recommended under Severe Driving Conditions" in this section.

- Repeated short-distance driving less than 5 miles (8 km).
- Extensive idling and/or slow-speed driving in stop-and-go traffic.
- Driving on dusty roads.
- Driving on hilly or mountainous terrain.
- Driving in heavy city traffic where the outside temperatures regularly reach 90°F (32°C) or higher.
- Driving as a taxi, police or delivery vehicle.
- Frequent driving when outside temperature remains below freezing.

Downloaded from www.Manualslib.com manuals search engine

Maintenance

Scheduled Maintenance Services

Maintenance services and record retention are the owner's responsibility. You should retain evidence that proper maintenance has been performed on your vehicle in accordance with the scheduled maintenance services chart.

Maintenance Recommended under Normal Driving Conditions

Maintenance Interval / Maintenance Item	Kilometers (miles) or time in months, whichever comes first															
	Months	6	12	18	24	30	36	42	48	54	60	66	72	78	84	90
	x 1,000 miles	7.5	15	22.5	30	37.5	45	52.5	60	67.5	75	82.5	90	97.5	105	112.5
	x 1,000 km	12	24	36	48	60	72	84	96	108	120	132	144	156	168	180
Engine Control System																
Drive Belt (Alternator, Power steering Pump & A/C Compressor)	I	I	I	I	I	I	I	I	I	I	I	I	I	I	I
Engine Oil & Oil Filter	R	R	R	R	R	R	R	R	R	R	R	R	R	R	R
Cooling System Hose & Connections		I		I		I		I		I		I		I	
Engine Coolant	I	I	I	R	I	I	I	R	I	I	I	R	I	I	I
Fuel Filter (integrated in Fuel Pump)				I*				I*				R*			
Fuel Line & Connections		I*		I*		I*		I*		I*		I*		I*	
Air Cleaner Element	I*	I*	I*	R*	I*	I*	I*	R*	I*	I*	I*	R*	I*	I*	I*
Spark Plugs		I*		R*		I*		R*		I*		R*		I*	
Spark Plug Wires	Replace every 60,000 miles (96,000 km)														
EVAP Canister and Vapor Lines				I*				I*				I*			
EVAP Canister Vent Valve Filter				I*				R*				I*			
PCV System			I*			I*			I*			I*			I*
Timing Belt				I				R				I			

Downloaded from www.Manualslib.com manuals search engine

MAINTENANCE SCHEDULE

Maintenance Interval / Maintenance Item	Kilometers (miles) or time in months, whichever comes first															
	Months	96	102	108	114	120	126	132	138	144	150	156	162	168	174	180
	x 1,000 miles	120	127.5	135	142.5	150	157.5	165	172.5	180	187.5	195	202.5	210	217.5	225
	x 1,000 km	192	204	216	228	240	252	264	276	288	300	312	324	336	348	360

Engine Control System (continued)

Drive Belt (Alternator, Power steering Pump & A/C Compressor)	I	I	I	I	I	I	I	I	I	I	I	I	I	I	I
Engine Oil & Oil Filter	R	R	R	R	R	R	R	R	R	R	R	R	R	R	R
Cooling System Hose & Connections	I		I		I		I		I		I		I		I
Engine Coolant	R	I	I	I	R	I	I	I	R	I	I	I	R	I	I
Fuel Filter (integrated in Fuel Pump)	I*				I*				R*				I*		
Fuel Line & Connections	I*		I*		I*		I*		I*		I*		I*		I*
Air Cleaner Element	R*	I*	I*	I*	R*	I*	I*	I*	R*	I*	I*	I*	R*	I*	I*
Spark Plugs	R*		I*		R*		I*		RI*		I*		R*		I*
Spark Plug Wires	Replace every 60,000 miles (96,000 km)														
EVAP Canister and Vapor Lines	I*				I*				I*				I*		
EVAP Canister Vent Valve Filter	R*				I*				R*				I*		
PCV System			I*			I*			I*			I*			I*
Timing Belt	R				I				R				I		

Downloaded from www.Manualslib.com manuals search engine

Maintenance Interval / Maintenance Item	Kilometers (miles) or time in months, whichever comes first															
	Months	6	12	18	24	30	36	42	48	54	60	66	72	78	84	90
	x 1,000 miles	7.5	15	22.5	30	37.5	45	52.5	60	67.5	75	82.5	90	97.5	105	112.5
	x 1,000 km	12	24	36	48	60	72	84	96	108	120	132	144	156	168	180

Chassis and Body

Air Filter (A/C)	R	R	R	R	R	R	R	R	R	R	R	R	R	R	R
Exhaust Pipe & Mountings		I*		I*		I*		I*		I*		I*		I*	
Brake/Clutch Fluid		I		R		I		R		I		R		I	
Front Brake Pads & Discs	I	I	I	I	I	I	I	I	I	I	I	I	I	I	I
Rear Brake Pads & Discs	I	I	I	I	I	I	I	I	I	I	I	I	I	I	I
Parking Brake		I		I		I		I		I		I		I	
Brake Line & Connections (Including Booster)		I		I		I		I		I		I		I	
Manual Transmission Fluid				I				I				I			
Automatic Transmission Fluid		I		I		I		I		I		I		I	
Chassis and Underbody Bolts and Nuts Tight/Secure		I		I		I		I		I		I		I	
Tire Condition & Inflation Pressure	I	I	I	I	I	I	I	I	I	I	I	I	I	I	I
Tire Rotation	Rotate every 7,500 miles (12,000 km)														
Steering Wheel & Linkage		I		I		I		I		I		I		I	
Power steering Fluid & Lines		I		I		I		I		I		I		I	
Drive Shaft Boots	I	I	I	I	I	I	I	I	I	I	I	I	I	I	I
Safety Belts, Buckles & Anchorages		I		I		I		I		I		I		I	
Lubricate Locks, Hinges & Hood Latch		I		I		I		I		I		I		I	

Downloaded from www.Manualslib.com manuals search engine

MAINTENANCE SCHEDULE

Maintenance Interval / Maintenance Item	Kilometers (miles) or time in months, whichever comes first															
	Months	96	102	108	114	120	126	132	138	144	150	156	162	168	174	180
	x 1,000 miles	120	127.5	135	142.5	150	157.5	165	172.5	180	187.5	195	202.5	210	217.5	225
	x 1,000 km	192	204	216	228	240	252	264	276	288	300	312	324	336	348	360

Chassis and Body (continued)

Air Filter (A/C)	R	R	R	R	R	R	R	R	R	R	R	R	R	R	R
Exhaust Pipe & Mountings	I*		I*		I*		I*		I*		I*		I*		I*
Brake/Clutch Fluid	R		I		R		I		R		I		R		I
Front Brake Pads & Discs	I	I	I	I	I	I	I	I	I	I	I	I	I	I	I
Rear Brake Pads & Discs	I	I	I	I	I	I	I	I	I	I	I	I	I	I	I
Parking Brake	I		I		I		I		I		I		I		I
Brake Line & Connections (Including Booster)	I		I		I		I		I		I		I		I
Manual Transmission Fluid	I				I				I				I		
Automatic Transmission Fluid	I		I		I		I		I		I		I		I
Chassis and Underbody Bolts and Nuts Tight/Secure	I		I		I		I		I		I		I		I
Tire Condition & Inflation Pressure	I	I	I	I	I	I	I	I	I	I	I	I	I	I	I
Tire Rotation	Rotate every 7,500 miles (12,000 km)														
Steering Wheel & Linkage	I		I		I		I		I		I		I		I
Power steering Fluid & Lines	I		I		I		I		I		I		I		I
Drive Shaft Boots	I	I	I	I	I	I	I	I	I	I	I	I	I	I	I
Safety Belts, Buckles & Anchorages	I		I		I		I		I		I		I		I
Lubricate Locks, Hinges & Hood Latch	I		I		I		I		I		I		I		I

Downloaded from www.Manualslib.com manuals search engine

Maintenance Recommended under Severe Driving Conditions

Follow this schedule if your car is mainly operated under one or more of the following conditions:

- Repeated short-distance driving less than 5 miles (8 km).
- Extensive idling and/or slow-speed driving in stop-and-go traffic.
- Driving on dusty roads.
- Driving on hilly or mountainous terrain.
- Driving in heavy city traffic where the outside temperatures regularly reach 90°F (32°C) or higher.
- Driving as a taxi, police or delivery vehicle.
- Frequent driving when outside temperature remains below freezing.

Maintenance Interval / Maintenance Item	Kilometers (miles) or time in months, whichever comes first															
	Months	3	6	9	12	15	18	21	24	27	30	33	36	39	42	45
	x 1,000 miles	3.75	7.5	11.25	15	18.75	22.5	26.25	30	33.75	37.5	41.25	45	48.75	52.5	56.25
	x 1,000 km	6	12	18	24	30	36	42	48	54	60	66	72	78	84	90
Engine Control System																
Drive Belt (Alternator, Power steering Pump & A/C Compressor)		I		I		I		I		I		I		I	
Engine Oil & Oil Filter	R	R	R	R	R	R	R	R	R	R	R	R	R	R	R
Cooling System Hose & Connections				I				I				I			
Engine Coolant		I		I		I		R		I		I		I	
Fuel Filter (integrated in Fuel Pump)								I*							
Fuel Line & Connections				I*				I*				I*			
Air Cleaner Element	I*	I*	I*	I*	I*	I*	I*	R*	I*	I*	I*	I*	I*	I*	I*
Spark Plugs				I*				R*				I*			
Spark Plug Wires	Replace every 60,000 miles (96,000 km)														
EVAP Canister and Vapor Lines								I*							
Solenoid Valve Filter								I*							
PCV System						I*						I*			
Timing Belt								I							

Downloaded from www.Manualslib.com manuals search engine

MAINTENANCE SCHEDULE

Maintenance Interval / Maintenance Item	Kilometers (miles) or time in months, whichever comes first															
	Months	48	51	54	57	60	63	66	69	72	75	78	81	84	87	90
	x 1,000 miles	60	63.75	67.5	71.25	75	78.75	82.5	86.25	90	93.75	97.5	101.25	105	108.75	112.5
	x 1,000 km	96	102	108	114	120	126	132	138	144	150	156	162	168	174	180

Engine Control System (continued)

Drive Belt (Alternator, Power steering Pump & A/C Compressor)	I		I		I		I		I		I		I		I
Engine Oil & Oil Filter	R	R	R	R	R	R	R	R	R	R	R	R	R	R	R
Cooling System Hose & Connections	I				I				I				I		
Engine Coolant	R		I		I		I		R		I		I		I
Fuel Filter (integrated in Fuel Pump)	I*								R*						
Fuel Line & Connections	I*				I*				I*				I*		
Air Cleaner Element	R*	I*	I*	I*	I*	I*	I*	I*	R*	I*	I*	I*	I*	I*	I*
Spark Plugs	R*				I*				R*				I*		
Spark Plug Wires	Replace every 60,000 miles (96,000 km)														
EVAP Canister and Vapor Lines	I*								I*						
Solenoid Valve Filter	R*								I*						
PCV System			I*						I*						I*
Timing Belt	R								I						

Downloaded from www.Manualslib.com manuals search engine

Maintenance Interval / Maintenance Item	Kilometers (miles) or time in months, whichever comes first															
	Months	3	6	9	12	15	18	21	24	27	30	33	36	39	42	45
	x 1,000 miles	3.75	7.5	11.25	15	18.75	22.5	26.25	30	33.75	37.5	41.25	45	48.75	52.5	56.25
	x 1,000 km	6	12	18	24	30	36	42	48	54	60	66	72	78	84	90

Chassis and Body

Air Filter (A/C)	R	R	R	R	R	R	R	R	R	R	R	R	R	R	R
Exhaust Pipe & Mountings				I*				I*				I*			
Brake/Clutch Fluid		I		R		I		R		I		R		I	
Front Brake Pads & Discs	I	I	I	I	I	I	I	I	I	I	I	I	I	I	I
Rear Brake Pads & Discs	I	I	I	I	I	I	I	I	I	I	I	I	I	I	I
Parking Brake				I				I				I			
Brake Line & Connections (Including Booster)				I				I				I			
Manual Transmission Fluid								I							
Automatic Transmission Fluid				I				I		R				I	
Chassis and Underbody Bolts and Nuts Tight/Secure				I				I				I			
Tire Condition & Inflation Pressure		I		I		I		I		I		I		I	
Tire Rotation	Rotate every 7,500 miles (12,000 km)														
Steering Wheel & Linkage				I				I				I			
Power steering Fluid & Lines				I				I				I			
Drive Shaft Boots		I		I		I		I		I		I		I	
Safety Belts, Buckles & Anchorages				I				I				I			
Lubricate Locks, Hinges & Hood Latch				I				I				I			

Downloaded from www.Manualslib.com manuals search engine

MAINTENANCE SCHEDULE

Maintenance Interval / Maintenance Item	Kilometers (miles) or time in months, whichever comes first															
	Months	48	51	54	57	60	63	66	69	72	75	78	81	84	87	90
	x 1,000 miles	60	63.75	67.5	71.25	75	78.75	82.5	86.25	90	93.75	97.5	101.25	105	108.75	112.5
	x 1,000 km	96	102	108	114	120	126	132	138	144	150	156	162	168	174	180

Chassis and Body (continued)

Air Filter (A/C)	R	R	R	R	R	R	R	R	R	R	R	R	R	R	R
Exhaust Pipe & Mountings	I*				I*				I*				I*		
Brake/Clutch Fluid	R		I		R		I		R		I		R		I
Front Brake Pads & Discs	I	I	I	I	I	I	I	I	I	I	I	I	I	I	I
Rear Brake Pads & Discs	I	I	I	I	I	I	I	I	I	I	I	I	I	I	I
Parking Brake	I				I				I				I		
Brake Line & Connections (Including Booster)	I				I				I				I		
Manual Transmission Fluid	I								I						
Automatic Transmission Fluid			I		R				I				I		R
Chassis and Underbody Bolts and Nuts Tight/Secure	I				I				I				I		
Tire Condition & Inflation Pressure	I		I		I		I		I		I		I		I
Tire Rotation	Rotate every 7,500 miles (12,000 km)														
Steering Wheel & Linkage	I				I				I				I		
Power steering Fluid & Lines	I				I				I				I		
Drive Shaft Boots	I		I		I		I		I		I		I		I
Safety Belts, Buckles & Anchorages	I				I				I				I		
Lubricate Locks, Hinges & Hood Latch	I				I				I				I		

Downloaded from www.Manualslib.com manuals search engine

Chart Symbols
I – Inspect these items and their related parts. Correct, clean, refill, adjust, lubricate, inflate or replace as required.

R – Replace or Change

NOTE:
Check the engine oil and engine coolant levels weekly.

*: SUZUKI recommends that this maintenance service be performed at the time/mileage interval indicated to ensure the peak performance and long-term reliability of your vehicle. However, the U.S. Environmental Protection Agency and the California Air Resources Board have determined that failure to perform this specific maintenance item will not void your emission warranty or limit recall liability.

Recommended Fluids and Lubricants

Fluids and lubricants identified below by name, part number or specification may be obtained from your dealer.

Usage	Fluid/Lubricant
Engine Oil	SAE 5W30 SL grade or SAE 10W30 SL grade
Engine Coolant	Silicate based Coolant
Brake/Clutch Fluid	DOT-3
Power Steering Fluid	DEXRON® II D or DEXRON® III
Automatic Transmission Fluid	ESSO LT 71141 or TOTAL ATF H50235
Manual Transmission Fluid	SAE 80W Extremely cold area: SAE 75W90

Maintenance Record

After the scheduled services are performed, record the date, odometer reading and who performed the service and any additional information from “Owner Checks and Services” or “Periodic Maintenance” on the following record pages. Also, you should retain all maintenance receipts.

Downloaded from www.Manualslib.com manuals search engine

MAINTENANCE SCHEDULE

Maintenance Record			
Date	Odometer Reading	Serviced By	Maintenance Record

Downloaded from www.Manualslib.com manuals search engine

Maintenance Record			
Date	Odometer Reading	Serviced By	Maintenance Record

Downloaded from www.Manualslib.com manuals search engine

MAINTENANCE SCHEDULE

Maintenance Record			
Date	Odometer Reading	Serviced By	Maintenance Record

Downloaded from www.Manualslib.com manuals search engine

GENERAL INFORMATION

Identification Numbers 7-1
Safety Certification Label 7-2
Emission Compliance Label (for U.S.A.) 7-2
Warranties 7-2
On-Board Vehicle Computers and Event Data Recorders 7-3
Reporting Safety Defects 7-4

Downloaded from www.Manualslib.com manuals search engine

Identification Numbers

Vehicle Identification Number

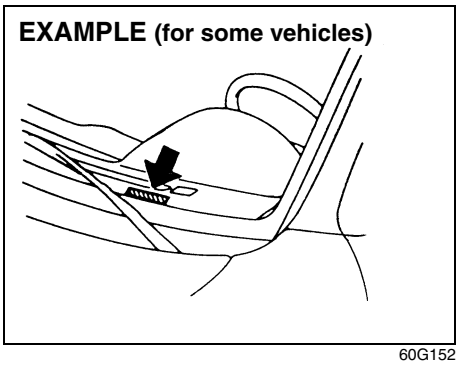

60G152

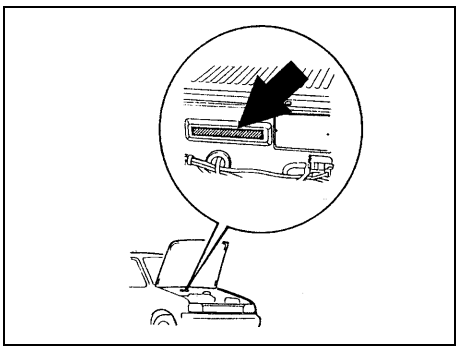

54G081

The Vehicle Identification Number (VIN) may be found in the location shown in the above illustrations. This number is used to register the vehicle. It is also used to assist your dealer when ordering parts or referring to special service information.

Engine Serial Number

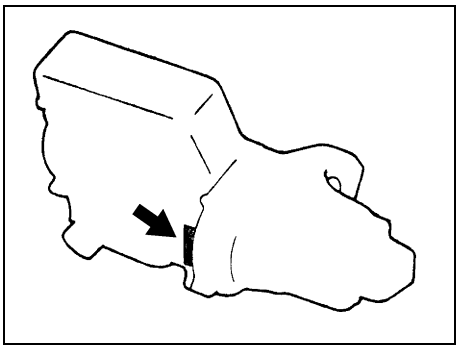

60G128

The engine serial number is stamped on the cylinder block as shown in the above illustration.

Downloaded from www.Manualslib.com manuals search engine

Safety Certification Label

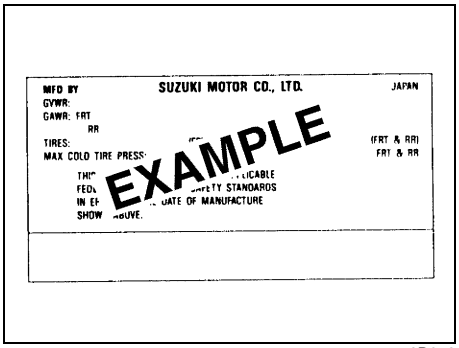

52D059

This label contains important safety-related information about your vehicle. The label is located on the driver's door lock pillar.

Emission Compliance Label (for U.S.A.)

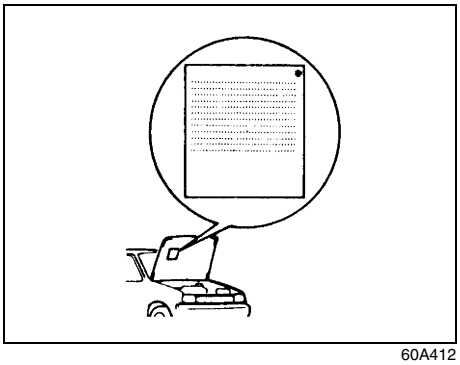

60A412

The EPA emission compliance label is located under the hood. It provides much of the information needed to perform an engine tune-up on your vehicle.

Warranties

The warranties covering your vehicle are explained in a separate New Vehicle Warranty Information booklet given to you at the time of sale. Please read this booklet carefully so you can understand your rights and responsibilities.

For U.S.A.

The following warranties are provided with your vehicle:

- New Vehicle Limited Warranty
- Limited Warranty For SUZUKI Parts or Accessories
- Emission Components Defect Warranty
- Emission Performance Warranty

Downloaded from www.Manualslib.com manuals search engine

On-Board Vehicle Computers and Event Data Recorders

Your vehicle is equipped with on-board computer systems which monitor and control several aspects of vehicle performance, including the following:

- Emission-related components and engine parameters such as engine speed and throttle position are monitored to provide emissions control and to provide optimum fuel economy. Your vehicle also has an on-board diagnostic system which monitors and records information about emission-related malfunctions.
- Signals from various sensors are monitored to provide air bag deployment.
- If your vehicle is equipped with antilock brakes, conditions such as vehicle speed and brake performance are monitored, so that the ABS system can provide effective antilock braking. If your vehicle has an Electronic Stability Program (ESP®) system, conditions such as yaw rate, lateral acceleration, and brake fluid pressure are monitored, so that the ESP® system can help the driver control the vehicle in difficult driving situations.

Some information may be stored by the on-board computers during normal operation of the vehicle. This stored information can assist technicians in repairing the vehicle when malfunctions occur. Other information is stored only in the event of crash, by computer systems that are commonly called Event Data Recorders (EDRs).

In a crash event, EDRs such as the Airbag Sensing and Diagnostic Module (SDM) in your vehicle may record information about the condition of the vehicle and how it was operated, such as data related to airbag readiness, airbag performance, safety belt usage, and the severity of the collision. These data can help provide a better understanding of the circumstances in which crashes and injuries occur and lead to the designing of safer vehicles. The SDM in your vehicle does not collect or store personal information.

To read the stored information, special equipment is needed and access to the vehicle or storage device is required. SUZUKI will not access information about a crash event or share it with others other than with the consent of the vehicle owner or lessee, in response to an official request from the police or similar government office, as part of SUZUKI's defense of litigation through the discovery process, or as required by law.

In addition, once SUZUKI collects or receives data, SUZUKI may use the data for research conducted by SUZUKI, make the data available for outside research if need is shown and confidentiality is assured, or make summary data which does not identify specific vehicles available for outside research.

Others, such as law enforcement personnel, may have access to the special equipment that can read the information if they have access to the vehicle or storage device.

Downloaded from www.Manualslib.com manuals search engine

Reporting Safety Defects

If you believe that your vehicle has a defect which could cause a crash or could cause injury or death, you should immediately inform the National Highway Traffic Safety Administration (NHTSA) in addition to notifying American Suzuki Motor Corp.

If NHTSA receives similar complaints, it may open an investigation, and if it finds that a safety defect exists in a group of vehicles, it may order a recall and remedy campaign. However, NHTSA cannot become involved in individual problems between you, your dealer, or American Suzuki Motor Corp.

To contact NHTSA, you may call the Vehicle Safety Hotline toll-free at 1-888-327-4236 (TTY: 1-800-424-9153); go to http://www.safercar.gov; or write to: Administrator, NHTSA, 400 Seventh Street, SW., Washington, D.C. 20590. You can also obtain other information about motor vehicle safety from http://www.safercar.gov.

To contact American Suzuki, owners in the continental United States can call toll-free 1-800-934-0934, or write to:

American Suzuki Motor Corporation
Automotive Customer Relations
3251 East Imperial Highway
Brea, CA 92821-6795

For owners outside the continental United States, please refer to the distributor's address listed in your Warranty Information booklet.

For vehicles registered for use and principally operated in Canada please contact Suzuki Canada Inc. at 1-905-889-2677 extension 2254 or write to:

Suzuki Canada Inc.
Customer Relations
100 East Beaver Creek Road
Richmond Hill, On
L4B 1J6

Downloaded from www.Manualslib.com manuals search engine

MEMO

Downloaded from www.Manualslib.com manuals search engine

INDEX

A

Accessory Power Outlet 3-10
Adding Equipment to the Outside of Your Vehicle 5-1
Adding Equipment to Your Air Bag-Equipped Vehicle 1-31
Additives 5-2
Add-On Electrical Equipment 5-46
Air Bag Readiness Light 3-19
Antenna 2-23
Anti-Lock Brake System (ABS) 4-3
Anti-Lock Brake System Warning Light 3-21
Appearance Care 5-42
Ashtrays and Cigarette Lighter 3-11
Audio System 3-27
Automatic Transmission Fluid 5-10
Automatic Transmission Operation 2-12

B

Backup Lamps and Tail/Stop Lamps 5-26
Battery 5-20
Before Driving 2-10
Before Leaving on a Long Trip 4-11
Brake System Warning Light 3-20
Brakes 5-18
Braking 4-3
Bulb Replacement 5-23
Buying New Tires 5-34

C

California Fuel 5-1
Capacities 5-51
Capacities and Specifications 5-51
CD CHANGER OPERATION (Optional) 3-77
Center High-Mounted Stop Lamp 5-25
Central Door Locking System 2-5
Changing a Flat Tire 5-37
Charging System Light 3-20
Checking Things Under the Hood 5-4
Checking Your Restraint Systems 1-33
Chemical Paint Spotting 5-45
Child Restraint Systems 1-18
Child Restraints 1-15
City Driving 4-10
Cleaning the Inside of Your Vehicle 5-42
Cleaning the Outside of Your Vehicle 5-43
Climate Control System 3-12
Climate Controls 3-12
Clock 3-12
Control of a Vehicle 4-2
Coolant Surge Tank Pressure Cap 5-13
Cooling System 5-14
Cruise Control 3-6
Cruise Control Light 3-25
Cupholder(s) 2-21

D

Daily Inspection Checklist 2-10
Daytime Running Lamps Indicator Light 3-26
Defensive Driving 4-1
Doing Your Own Service Work 5-1

Downloaded from www.Manualslib.com manuals search engine

INDEX

Door Ajar Light 3-26
Door Ajar Reminder 2-5
Door Locks 2-4
Doors and Locks 2-4
Driver Position 1-7
Driver Seat Height Adjuster 1-2
Driving at Night 4-8
Driving in Rain and on Wet Roads 4-9
Drunken Driving 4-1

E

Electrical System 5-46
Emission Compliance Label (for U.S.A.) 7-2
Engine Air Cleaner/Filter 5-9
Engine Compartment Overview 5-6
Engine Coolant 5-12
Engine Coolant Temperature Gauge 3-22
Engine Exhaust 2-19
Engine Oil 5-7
Engine Overheating 5-13
Engine Serial Number 7-1
Exterior Lamps 3-8

F

Filling a Portable Fuel Container 5-4
Filling Your Tank 5-2
Finish Damage 5-45
Fog Lamp Light 3-25
Folding Rear Seat 1-4
Freeway Driving 4-11
Front Armrest Storage Area 2-22
Front Fog Lamps 5-24
Front Seats 1-1
Front Storage Area 2-22
Front Turn Signal Lamps 5-24
Fuel 5-1
Fuel Gauge 3-25
Fuels in Foreign Countries 5-2
Fuses and Circuit Breakers 5-47

G

Gasoline Octane 5-1
General Information 6-1
Glossary of Tire Terminology 5-30
Glove Box 2-21

H

Halogen Bulbs 5-23
Hazard Warning Flashers 3-2
Head Restraints 1-3
Headlamp Aiming 5-23
Headlamp Wiring 5-46
Headlamps 5-24
Highbeam On Light 3-25
Highway Hypnosis 4-12
Hill and Mountain Roads 4-12
Hold Mode Light 3-22
Hood Release 5-4
Horn 3-2
How Does an Air Bag Restrain? 1-32
How to Wear Safety Belts Properly 1-7
Hydraulic Clutch 5-12

I

Identification Numbers 7-1
If a Tire Goes Flat 5-36
Ignition Positions 2-11

Downloaded from www.Manualslib.com manuals search engine

Infants and Young Children 1-16
Instrument Panel Cluster 3-18
Instrument Panel Overview 3-1
Interior Lamps 3-9
J
Jump Starting 5-20
K
Keys 2-1
L
Lap-Shoulder Belt 1-11
Leaving Your Vehicle 2-6
License Plate Lamps 5-26
Liftgate 2-6
Loading Your Vehicle 4-17
Lockout Protection 2-6
Loss of Control 4-7
Low Fuel Warning Light 3-26
Lower Anchorages and Top Tethers for Children (LATCH System) 1-22
Luggage Compartment Lamp 5-25
M
Maintenance 6-2
Maintenance Recommended under Normal Driving Conditions 6-2
Maintenance Recommended under Severe Driving Conditions 6-6
Maintenance Record 6-10
Malfunction Indicator Lamp 3-22
Manual Lumbar 1-2
Manual Rearview Mirror 2-20
Manual Seats (With Sliding Storage Tray) 1-1
Manual Seats (Without Sliding Storage Tray) 1-1
Manual Transmission Fluid 5-11
Manual Transmission Operation 2-15
Manual Windows 2-7
Mirrors 2-20
N
National Highway Traffic Safety Administration (NHTSA) 7-4
New Vehicle Break-In 2-10
O
Off-Road Recovery 4-6
Oil Pressure Light 3-24
Older Children 1-15
On-Board Vehicle Computers and Event Data Recorders 7-3
Outlet Adjustment 3-17
Outside Convex Mirror 2-21
Outside Heated Mirrors 2-21
Outside Manual Mirror 2-20
Outside Power Mirrors 2-20
P
Parking Brake 2-16
Parking Over Things That Can Burn 2-18
Parking Your Vehicle (Manual Transmission) 2-18
Passenger Air Bag Off Indicator 3-26
Passenger Compartment Air Filter 3-17
Passenger Sensing System 1-30
Power Door Locks 2-5
Power Steering Fluid 5-17
Power Windows 2-7
Power Windows and Other Power Options 5-47

Downloaded from www.Manualslib.com manuals search engine

Q

Questions and Answers About Safety Belts 1-7

R

Radio and MP3 CD Player (AGC-3146) 3-41
Radio and Tape with CD (Double Display, MP3/WMA) (AGK-5390) 3-62
Radio and Tape with Six-Disc CD (Double Display, MP3/WMA) (AGX-5410JA) 3-69
Radio with CD (Double Display, MP3/WMA) (AGC-5380) 3-48
Radio with Six-Disc CD (Double Display, MP3/WMA) (AGH-5400) 3-55
Radio, Cassette and CD (ACK-1646) 3-29
Rear Door Security Locks 2-5
Rear Seat Armrest 2-23
Rear Seat Passengers 1-11
Rear Seats 1-4
Rear Sidemarker Lamps 5-27
Rear Window and Outside Rearview Mirror Defogger 3-16
Rear Window Washer/Wiper 3-6
Reclining Seatbacks 1-2
Recommended Fluids and Lubricants 6-10
Recreational Vehicle Towing 4-16
Remote Keyless Entry System 2-1
Remote Keyless Entry System Operation 2-2
Replacement Bulbs 5-27
Replacing Restraint System Parts After a Crash 1-34
Reporting Safety Defects 7-4
Restraint System Check 1-33
Right Front Passenger Position 1-11
Running Your Engine While You Are Parked 2-19

S

Safety Belt: They are for Everyone 1-5
Safety Belt Extender 1-14
Safety Belt Pretensioner System 1-13
Safety Belt Reminder Light 3-19
Safety Belt Reminder Tone 3-19
Safety Belt Use During Pregnancy 1-10
Safety Belts 1-5
Safety Certification Label 7-2
Scheduled Maintenance Services 6-2
Securing a Child Restraint Designed for the LATCH System 1-23
Securing a Child Restraint in a Rear Seat Position 1-24
Securing a Child Restraint in the Right Front Seat Position 1-25
Securing a Child Restraint with Top Strap 1-21
Selecting the Right Condition 6-1
Service 5-1
Servicing Your Air Bag-Equipped Vehicle 1-33
Sheet Metal Damage 5-45
Shifting Into Park (P) 2-17
Shifting Out of Park (P) 2-17
Spare Tire 5-41
Specifications 5-51
Speed Sensitive Power Steering (SSPS) Warning Light 3-21
Speedometer and Odometer 3-18
Starting and Operating Your Vehicle 2-10
Starting Your Engine 2-11
Steering 4-5
Storage Areas 2-21

Downloaded from www.Manualslib.com manuals search engine

Sun Visors 2-8
Sunglasses Storage Compartment 2-22
Sunroof 2-23
Supplemental Restraint System (air bags) 1-26
T
Tachometer 3-19
Tail/Stop Lamps and Rear Turn Signal Lamps 5-25
Theft-Deterrent Systems 2-8
Tilt Wheel 3-3
Tire Chains 5-36
Tire Inflation Pressure 5-32
Tire Inspection and Rotation 5-33
Tire Sidewall Labeling 5-28
Tire Size 5-29
Tires 5-28
Top Strap 1-20
Top Strap Anchor Location 1-21
Towing 4-16
Towing a Trailer 4-19
Towing Your Vehicle 4-16
Trip Odometer 3-18
Turn Signal/Multifunction Lever 3-3
U
Underbody Maintenance 5-45
Uniform Tire Quality Grading 5-35
V
Vehicle Care/Appearance Materials 5-45
Vehicle Identification 5-46
Vehicle Identification Number 7-1
Vehicle Identification Number (VIN) 5-46
Vehicle Loading 5-33
W
Warning Lights, Gauges and Indicators 3-18
Warranties 7-2
Weatherstrips 5-43
What Makes an Air Bag Inflate? 1-32
What Will You See After an Air Bag Inflates? 1-32
Wheel Alignment and Tire Balance 5-35
Wheel Replacement 5-36
When It Is Time for New Tires 5-34
When Should an Air Bag Inflate? 1-31
When to Add Engine Oil 5-7
Where Are the Air Bags? 1-29
Where to Put the Restraint 1-20
Windows 2-7
Windshield Washer Fluid 5-17
Windshield Wiper Blade Replacement 5-27
Windshield Wiper Fuses 5-46
Windshield Wiper/Washer Lever 3-4
Winter Driving 4-13
Y
Your Driving, the Road, and Your Vehicle 4-1

Downloaded from www.Manualslib.com manuals search engine

MEMO

Downloaded from www.Manualslib.com manuals search engine

Prepared by
SUZUKI MOTOR CORPORATION

September, 2005

Part No. 99011-85Z12-03E
Printed in U.S.A.

TP252

Downloaded from www.Manualslib.com manuals search engine

ENGLISH

SERVICE STATION INFORMATION

Fuel recommendation:
See page 5-1

Engine oil recommendation:
Engine oil with “Starburst” symbol

For further details, see “Engine Oil” in the “SERVICE AND APPEARANCE CARE” section.

Brake and clutch fluid:
DOT3

Automatic transmission fluid:
ESSO LT71141 or TOTAL ATF H50235

Tire cold pressure:
See the “Tire Information Label” located on the driver’s door lock pillar.

英

RENO 99011-85Z12-03E

Made from 100% recycled paper, except for cover.

99011-85Z12-03E

SUZUKI MOTOR CORPORATION

Printed in U.S.A.

Suzuki Red: Magenta 100%, Yellow 100%
Suzuki Blue: Cyan 100%, Magenta 70%

Downloaded from www.Manualslib.com manuals search engine