FIAT BRAVO

OWNER HANDBOOK

WHY CHOOSING GENUINE PARTS

We really know your car because we invented, designed and built it: we really know every single detail.
At **Fiat Service authorised workshops** you can find technicians directly trained by us, offering quality and professionalism for all service operations.
Fiat workshops are always close to you for the regular servicing operations, season checks and practical recommendations by our experts.
With Fiat Genuine Parts you keep the reliability, comfort and performance features of your new car unchanged in time: that's why you bought it for.
Always ask for Genuine Parts for the components used on our cars; we recommend them because they come from our steady commitment in research and development of highly innovative technologies.
For all these reasons: **rely on Genuine Parts, because they are the only ones designed by Fiat for your car.**

SAFETY: BRAKING SYSTEM

ENVIRONMENT: PARTICULATE FILTERS, CLIMATE CONTROL MAINTENANCE

COMFORT: SUSPENSION AND WINDSCREEN WIPERS

PERFORMANCE: SPARK PLUGS, INJECTORS AND BATTERIES

LINEACCESSORI ROOF RACK BARS, WHEEL RIMS

CHOOSING GENUINE PARTS IS THE MOST NATURAL CHOICE

PERFORMANCE

COMFORT

SAFETY

AMBIENT

ACCESSORIES

VALUES

HOW TO RECOGNISE GENUINE PARTS

To recognise a **Genuine Part**, check **that the component bears our brands**, always clearly visible on Genuine Parts, from the braking system to windscreen wipers, from shock absorbers to pollen filter.
All **Genuine Parts** undergo **strict controls**, both during design and manufacturing stages, by specialists using **vanguard materials**, to **test the component reliability.**
This to guarantee **performance** and **safety** for you and your passengers on board, for a long time.
Always ask for and make sure a **Genuine Part** has been used.

Pollen filter

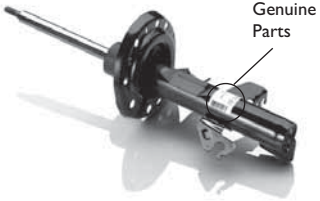

Shock absorber

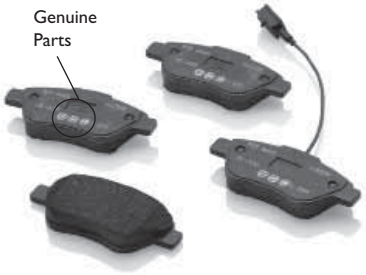

Brake pads

Dear Customer,

We would like to congratulate and thank you for choosing a Fiat Bravo.

We have written this handbook to help you get to know all the features of your car and use it in the best possible way.

You are recommended to read it right through before taking to the road for the first time.

It contains important information, advice and instructions for the use of the car which will help you get the very best out of your Fiat. The handbook also provides a description of special features and tips as well as essential information for correct care, maintenance, safe car driving and use and preservation of your Fiat over time.

Carefully read the warnings and indications marked with the following symbols:

personal safety;

car safety;

environmental protection.

The enclosed Warranty Booklet lists the services that Fiat offers to its Customers:

❒ the Warranty Certificate with terms and conditions for maintaining its validity;

❒ the range of additional services available to Fiat Customers.

We are sure that these will help you familiarise with your new car and appreciate it and the care provided by the people at Fiat.

Enjoy reading. Happy motoring!

This Owner Handbook describes all the versions of the Fiat Bravo. As a consequence, you should only consider the information which is related to the trim level, engine and version that you have purchased. All data contained in this publication are purely indicative. Fiat Group Automobiles can modify the specifications of the vehicle model described in this publication at any time, for technical or commercial reasons. For further information, contact a Fiat Dealership.

ESSENTIAL INFORMATION!

REFUELLING

Only use diesel fuel compliant with European specification EN590. The use of other products or mixtures may damage the engine beyond repair and consequently invalidate the warranty.

STARTING THE ENGINE

Make sure that the handbrake is engaged; place the gear lever in neutral. Fully depress the clutch pedal, without pressing the accelerator, then turn the ignition key to the MAR-ON position and wait for the and warning lights to switch off; turn the ignition key to AVV and release it as soon as the engine starts.

PARKING ON FLAMMABLE MATERIAL

The catalytic converter develops high temperatures during operation. Do not park the car on grass, dry leaves, pine needles or other flammable material: fire hazard.

RESPECTING THE ENVIRONMENT

The car is fitted with a system that allows continuous diagnosis of the components related to emissions to ensure increased respect for the environment.

ELECTRICAL ACCESSORIES

If, after buying the car, you decide to add electrical accessories (with the risk of gradually draining the battery), contact a Fiat Dealership. They will calculate the overall electrical requirement and check that the car's electrical system can support the required load.

CODE card
(for versions/markets, where provided)

Keep it in a safe place, not in the car. You should have the electronic code shown on the CODE card with you at all times.

SCHEDULED SERVICING

Correct maintenance of the car is essential for ensuring that it maintains its performance and its safety features, its environmental friendliness and low running costs for a long time to come.

THE OWNER MANUAL CONTAINS...

... important information, advice and warnings for correct use, driving safety and maintenance of your car over time. Special attention must be paid to the symbols provided (personal safety) (environmental protection) (car integrity).

DASHBOARD

The presence and position of the controls, instruments and indicators may vary according to the different versions.

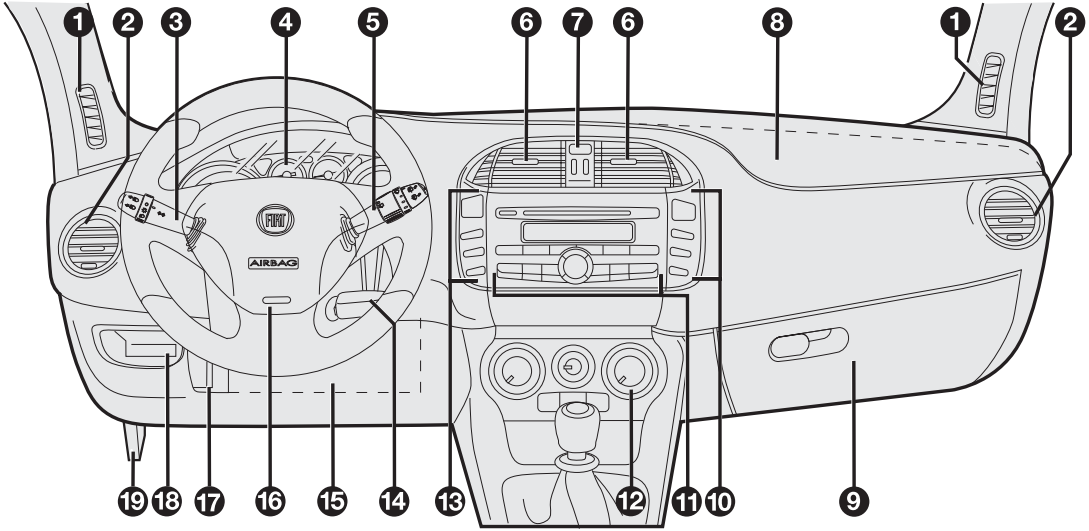

fig. 1 F0Q0639

1. Diffuser for directing air to the side windows - 2. Adjustable and directable air diffuser - 3. Exterior light control lever - 4. Instrument panel - 5. Windscreen wiper/rear window wiper/trip computer control lever - 6. Adjustable and directable air diffusers - 7. Hazard warning lights switch - 8. Passenger front airbag - 9. Glove compartment - 10. Fog lights/rear fog lights and menu access/setting switch unit - 11. Radio controls - 12. Heating/ventilation/climate control system controls - 13. Electric power steering and ASR system (for versions/markets, where present)/front and rear parking sensors (for versions/markets, where present) on/off switch unit - 14. Ignition key and ignition switch - 15. Driver side front knee bag (for versions/markets, where provided) - 16. Driver front airbag - 17. Steering wheel locking lever - 18. Fuse box access flap - 19. Bonnet release lever

GETTING TO KNOW YOUR CAR
SAFETY
STARTING AND DRIVING
WARNING LIGHTS AND MESSAGES
IN AN EMERGENCY
SERVICING AND MAINTENANCE
TECHNICAL SPECIFICATIONS
INDEX

CONTROL PANEL AND INSTRUMENTS

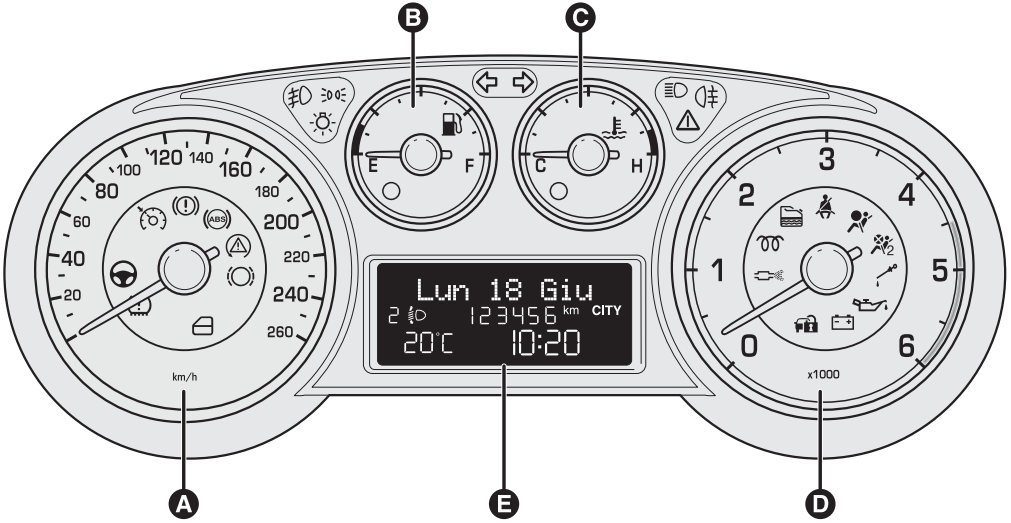

fig. 2

F0Q0909

A. Speedometer B. Fuel level gauge with reserve warning light C. Engine coolant temperature gauge with overheating warning light D. Rev counter E. Display

SPEEDOMETER

Shows the car speed (speedometer).

REV COUNTER

This indicates the engine rpm.

When the engine is idling, the rev counter may indicate a gradual or sudden increase of the speed.

This behaviour is standard as it takes place during the activation of the climate control system or the fan. It should not be considered as a fault. In these cases, a slow change in revs is used to protect the battery charge.

IMPORTANT The electronic injection control system gradually shuts off the flow of fuel when the engine is “over-revving” resulting in a gradual loss of engine power.

FUEL LEVEL GAUGE

This shows the amount of fuel left in the fuel tank.

Warning light A fig. 3 comes on to indicate that approximately 8-10 litres of fuel are left in the tank.

E tank empty

F tank full (see the instructions provided in the "Refuelling the car" paragraph in this chapter).

Do not travel with the fuel tank almost empty: any gaps in fuel delivery could damage the catalytic converter.

IMPORTANT The needle will point to E and warning light A fig. 3 will flash to indicate a fault in the system. Contact a Fiat Dealership to have the system checked.

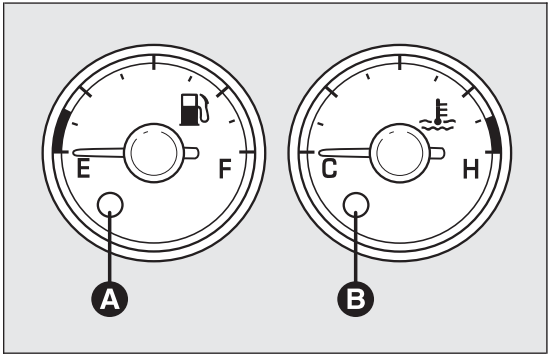

fig. 3 F0Q0608

ENGINE COOLANT TEMPERATURE INDICATOR

This shows the temperature of the engine coolant fluid and starts working when the fluid temperature exceeds approx. 50°C.

Under normal conditions, the needle assumes different positions within the scale depending on the usage conditions.

C Low engine coolant temperature

H High engine coolant temperature.

Warning light B fig. 3 may light up (and a message on the display may appear on certain versions) to indicate that the coolant fluid temperature is too high; in this case, stop the engine and contact a Fiat Dealership.

If the needle for the engine coolant temperature reaches the red area, stop the engine immediately and contact a Fiat Dealership.

SYMBOLS

Some car components have coloured labels whose symbols indicate precautions to be observed when using this component.

A plate summarising these symbols fig. 4 can be found under the bonnet.

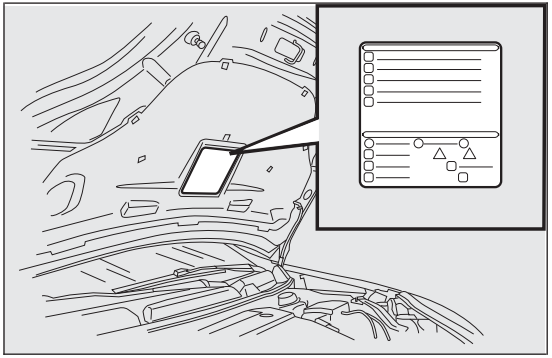

fig. 4 F0Q0640

THE FIAT CODE SYSTEM

To further protect your car from theft, it has been fitted with an engine immobilising system. It is automatically activated when the ignition key is removed.

There is an electronic device in each key which can identify the signal emitted, when the engine is started, from an aerial built into the ignition switch. The signal is the "password", different every time the vehicle is started, through which the control unit recognises the key and enables starting.

OPERATION

Each time the vehicle is started turning the ignition key to MAR-ON, the Fiat CODE system control unit sends an acknowledgement code to the engine control unit to deactivate the immobiliser. The code is sent only if the Fiat CODE system control unit has acknowledged the code received from the key.

Each time the ignition key is turned to STOP, the Fiat CODE system deactivates the functions of the engine management control unit.

If, during starting, the code is not correctly recognised, the warning light (or symbol on the display) switches on in the instrument panel.

In this case, turn the key to STOP and then to MAR-ON; if it is still locked, try again with the other keys that come with the vehicle. Contact a Fiat Dealership if you still cannot start the engine.

IMPORTANT Each key has its own code which must be stored by the system's control unit. To have new keys stored, up to a maximum number of eight keys, contact a Fiat Dealership and be ready to present all the keys you have in your possession, the CODE card, a personal identity document and the car ownership documents. The codes for keys not presented during the storing procedure will be deleted to ensure that any keys that are lost or stolen cannot be used to start the engine.

warning light (or symbol on the display) on whilst driving

❒ If the warning light (or symbol in the display) switches on, this means that the system is running self-diagnosis (caused, for example, by a voltage drop).

❒ If the warning light (or symbol in the display) stays on, contact a Fiat dealership.

The electronic components inside the key may be damaged if the key is subjected to strong shocks.

THE KEYS

CODE CARD
(for versions/markets, where provided)

A CODE card fig. 5 is provided together with the vehicle keys. This should be presented to a Fiat Dealership should you require any duplicate keys.

IMPORTANT In order to ensure complete efficiency of the electronic devices inside the keys, they should never be exposed to direct sunlight.

The ignition key and the CODE card must be handed over to the new owner when selling the car.

KEY WITHOUT REMOTE CONTROL
(for versions/markets, where provided)

The key is provided with a metal insert A fig. 6, which operates:

❒ the ignition switch

❒ the door lock

❒ the fuel flap lock/release (on versions supplied with a lockable plug)

❒ the safe lock device (deactivation only - for versions/markets, where provided).

To request duplicates of the key, go to a Fiat Dealership, taking an ID document and the car ownership documents.

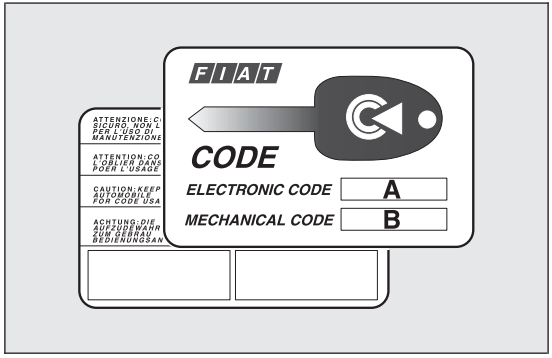

fig. 5 F0Q0001

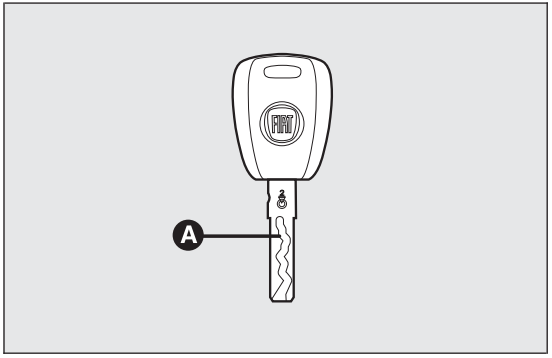

fig. 6 F0Q0034

KEY WITH REMOTE CONTROL

The key is provided with a metal insert A fig. 7, which operates:

❒ the ignition switch

❒ the door lock

❒ the fuel flap lock/unlock

❒ the safe lock device (deactivation only - for versions/markets, where provided)

Pressing button B opens/closes metal insert A.

Button 🔓 remotely unlocks the doors and the tailgate.

Button 🔒 remotely locks the doors and the tailgate.

Button 🚗 remotely opens the tailgate.

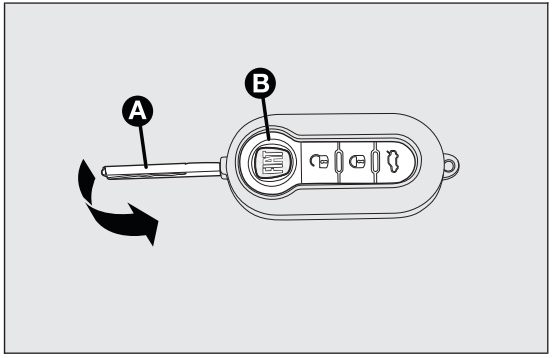

fig. 7 F0Q0255

If the button for locking doors 🔒 from the inside is accidentally pressed, only the doors opened for getting out of the car are released; the tailgate remains locked. For system reset, press the lock/release buttons again 🔒/🔓.

WARNING

Press button B fig. 7 only with the key away from your body, specifically from your eyes and from objects which could get damaged (e.g. your clothes). Do not leave the key unattended to avoid the button being accidentally pressed while it is being handled, e.g. by a child.

Unlocking the doors and the tailgate

Briefly press button 🔓 for unlocking the doors and tailgate with the alarm being switched off at the same time (for versions/markets, where provided), timed switching-on of internal roof lights and double flashing of direction indicators (for versions/markets, where provided).

Pressing button 🔓 for longer than 2 seconds: window opening.

Doors will be unlocked automatically if the fuel inertia cut-off switch is activated.

Locking the doors and the tailgate

Briefly press button 🔒 for locking the doors and tailgate with the alarm being switched on at the same time (for versions/markets, where provided), timed switching-off of internal roof lights and single flashing of direction indicators.

Pressing button 🔒 for longer than 2 seconds: window closing. When the button is pressed twice quickly, the safe lock device is activated (for versions/ markets, where provided) (see "Safe Lock Device" paragraph hereafter).

If one or more door are open, the doors will not be locked. This is signalled by LED A fig. 8 in the central panel and the direction indicators flashing rapidly. If the luggage compartment is open, the doors will, however, be locked.

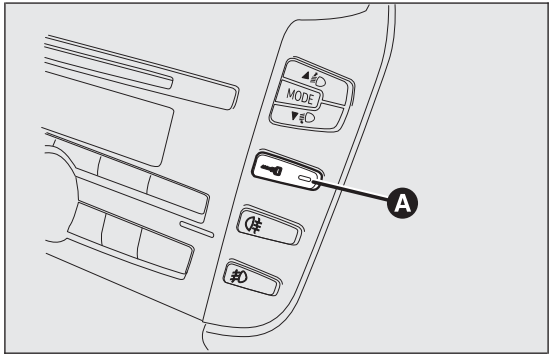

fig. 8 F0Q0742

Opening the tailgate by the remote control

Press button to release (open) the tailgate remotely even with the alarm on (for versions/ markets where provided).

The opening of the tailgate is signalled by the direction indicators flashing twice; when it is closed there is one flash (only with the alarm on).

If an alarm is fitted, when the tailgate is opened, the alarm system switches off the volume sensing protection and the perimeter sensor for the tailgate.

When the tailgate is closed again, the volume sensing protection and perimeter sensor are restored.

LED indications on central panel

When locking the doors, LED A fig. 8 switches on for about 3 seconds and then starts flashing (deterrence function).

If one of the doors or the tailgate are not properly shut when the doors are being locked, the LED flashes quickly together with the direction indicators.

REPLACING THE BATTERY IN THE KEY WITH REMOTE CONTROL

To replace the battery, proceed as follows fig. 9:

❒ press button A and open the metal insert B;

❒ turn screw C to 🔓 using a fine bit screwdriver;

❒ take out the battery case D and replace the battery E making sure that polarities are correct;

❒ refit the battery case D inside the key and lock it turning the screw C to 🔒 .

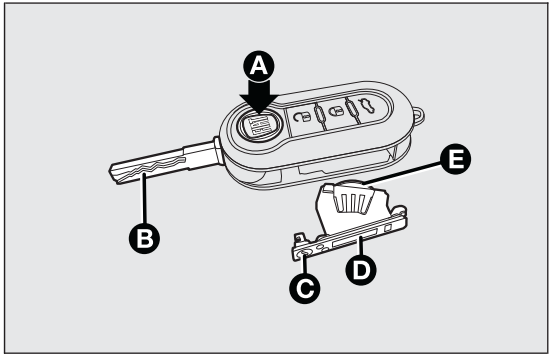

fig. 9 F0Q0256

REQUEST FOR ADDITIONAL REMOTE CONTROLS

The system can recognise up to 8 remote controls. Should a new remote control be necessary, contact a Fiat Dealership, taking with you the CODE card, an ID document and the car ownership documents.

Used batteries are harmful to the environment. You can dispose of them either in the correct containers as specified by law or by taking them to a Fiat Dealership, which will deal with their disposal.

REPLACING THE REMOTE CONTROL COVER

Proceed as shown in figure fig. 10 to replace the remove control cover.

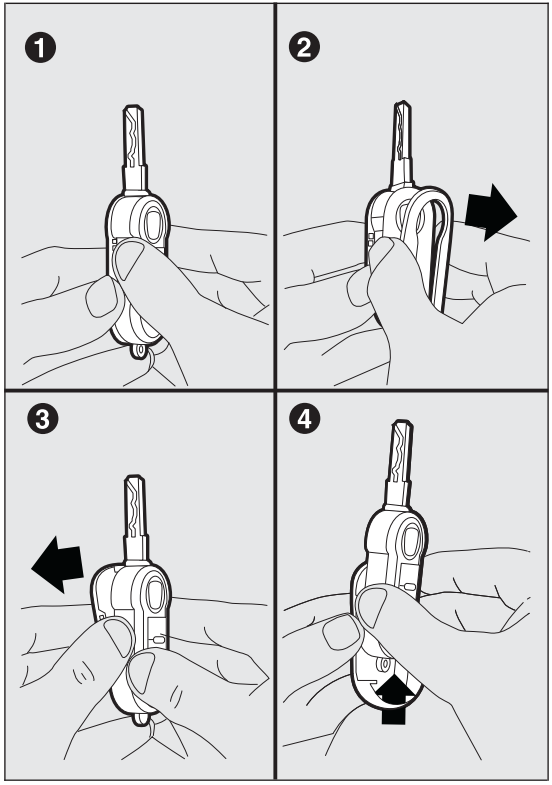

fig. 10 F0Q0257

SAFE LOCK DEVICE
(for versions/markets, where provided)

This safety device inhibits the operation of:

❒ interior handles;

❒ door locking/unlocking button on the central trim fig. 11;

thereby preventing the opening of the doors from inside the passenger compartment if there has been a break in attempt (e.g. a window has been broken).

The safe lock device therefore offers the best possible protection against break-in attempts. We recommend engaging it whenever the vehicle is parked and left unattended.

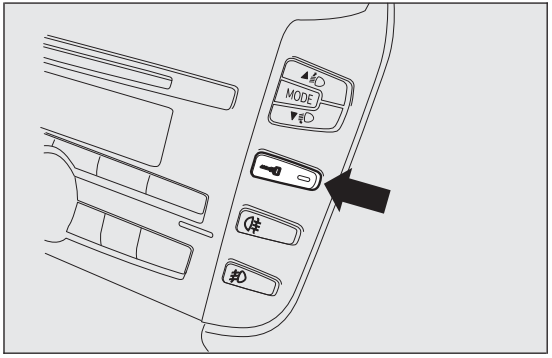

fig. 11 F0Q0641

WARNING

If the key with remote control battery is flat, the system can be engaged by using the metal insert in the door catch as described previously: in this case, the device only remains active for the rear doors.

Device activation

The system is automatically enabled on all the doors by pressing button 🔒 twice on the key with remote control.

Device activation is indicated by 3 flashes of the direction indicators and a flash of the LED on the door locking button on the dashboard.

If one or more of the doors is not closed correctly, the dead lock device will not activate, thus preventing a person from getting stuck inside the passenger compartment by entering the car through, and then closing, the open door.

WARNING

Once the safe lock system is engaged, it is impossible to open the doors from inside the car. Therefore, before getting out of the car check that there is no one left on board.

Device deactivation

The system is disabled automatically on every door when:

❒ unlocking the doors;

❒ by turning the ignition key to the MAR-ON position.

ALARM

(for versions/markets, where provided)

The alarm, in addition to all the remote control functions described previously, is controlled by the receiver located under the dashboard near the fuse box.

ALARM ACTIVATION

The alarm intervenes in the following instances:

❒ when a door, the bonnet or the tailgate is opened illegally (perimeter protection);

❒ when the ignition system is started up (ignition key turned to MAR-ON);

❒ cutting of the battery leads;

❒ movement inside the passenger compartment (volume sensing protection);

❒ anomalous lifting/tilting of the vehicle.

Depending on the market, the activation of the alarm causes the activation of the siren and the direction indicators (for about 26 seconds). Alarm tripping and the number of cycles depend on the sales market.

There is a maximum number of acoustic/visual cycles. When this is reached the system returns to normal operation.

The volume sensing and anti-lift protection can be excluded by adjusting the dedicated control on the front roof light (see “Volume sensing/Anti-lift protection”).

IMPORTANT The engine stop function is guaranteed by the Fiat CODE which is automatically activated when the key is extracted from the ignition switch.

TURNING THE ALARM ON

With the doors, bonnet and tailgate closed and the ignition key either turned to STOP or removed, point the key with remote control towards the vehicle and press and release button 🔒.

Excluding some markets, the system produces an acoustic signal (beep) and enables door locking.

The switching on of the alarm is preceded by a self-diagnosis stage: if a fault is detected, the system emits a new acoustic signal together with the display of a message (see “Warning lights and messages” chapter).

In this case switch off the alarm by pressing 🔓, check that all the doors, bonnet and tailgate are closed correctly; then switch the alarm back on by pressing the 🔒 button.

If a door, the bonnet and the tailgate are not properly shut, they will be excluded from the check by the alarm system.

If the alarm emits an acoustic signal even when the doors, bonnet and tailgate are correctly closed, a failure has occurred in system operation. Go to a Fiat Dealership.

IMPORTANT The alarm does not come on when the central locking is activated using the metal insert in the key.

IMPORTANT The alarm is adapted to meet requirements in various countries.

TURNING THE ALARM OFF

Press button on the key with remote control.

The following operations are performed (excluding some versions for specific markets):

❒ direction indicators flash twice;

❒ there are two short acoustic signals (beeps);

❒ doors are unlocked.

IMPORTANT The alarm does not switch off when the central opening is activated using the metal insert in the key.

VOLUME SENSING/ANTI-LIFT PROTECTION

To guarantee the correct operation of the protection system it is advisable to shut all the side windows and the sun roof (for versions/markets, where provided).

If necessary, the function can be turned off (if, for example, you are leaving an animal in the car) by pressing button A fig. 12, located in the front roof light, before activating the alarm itself.

When the function is disabled, this is indicated by the LED on the button flashing for several seconds. Any disabling of the volume sensing/anti-lift protection must be repeated each time the instrument panel is switched off.

BREAK-IN ATTEMPT INDICATION

Any break-in attempt is indicated by the warning light (or symbol in the display) lighting up, together with a message shown in the display (see "Warning lights and messages" chapter).

DISABLING THE ALARM

To turn the alarm off completely (for example, if the vehicle is not being used for a long time), the vehicle must be closed by turning the metal insert of the key with remote control in the lock.

IMPORTANT If the batteries of the key with remote control run out or the system fails, the alarm can be switched off by placing the key in the ignition switch and turning it to MAR-ON.

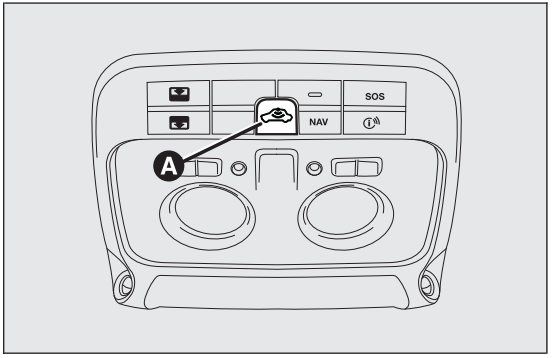

fig. 12 F0Q0752

IGNITION SWITCH

The key can be turned to 3 different positionsfig. 13:

❒ STOP: engine off, key can be removed, steering column locked. Some electrical devices (e.g. radio, central door locking system, electronic alarm, etc.) are enabled.

❒ MAR-ON: driving position. All electrical devices are enabled.

❒ AVV: engine start-up.

The ignition switch is fitted with a safety system that requires the ignition key to be turned back to STOP if the engine does not start, before the starting operation can be repeated.

WARNING

If the ignition switch is tampered with (e.g. attempted theft), have it checked over by a Fiat Dealership before driving again.

WARNING

Always remove the key when you leave your car to prevent someone from accidentally operating the controls. Remember to engage the handbrake. If the car is parked on uphill slope, engage the first gear; if the car is facing downhill, engage the reverse gear. Never leave children unattended in the car.

STEERING LOCK

Engagement

When at STOP, remove the key and turn the steering wheel until it locks.

Disengagement

Move the steering wheel slightly as you turn the ignition key to MAR-ON.

IMPORTANT In some parking conditions (e.g.: wheels turned) the effort required to move the steering wheel and disengage the steering lock may be increased.

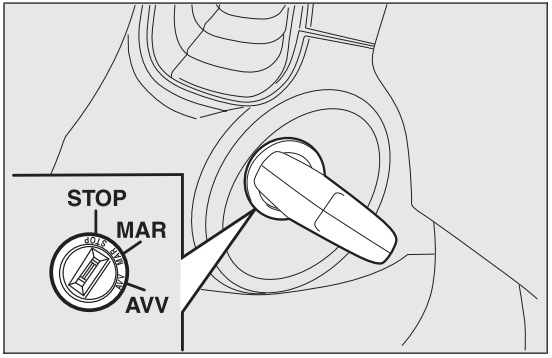

fig. 13 F0Q0642

WARNING

It is absolutely forbidden to carry out any aftermarket operation involving steering system or steering column modifications (e.g.: installation of anti-theft device) that could badly affect performance and safety, invalidate the warranty and also result in non-compliance of the car with type-approval requirements.

WARNING

Never remove the key while the car is moving. The steering wheel will lock as soon as it is turned. This holds true for cars being towed as well.

DISPLAY

The car is equipped with a multifunction display that, according to the previously applied settings, will show useful driving information.

When one of the front doors is opened, the display is activated, showing the time and mileage for a few seconds.

Note With a low outside temperature (below 0°C) it may take longer than normal for information to appear on the display.

MULTIFUNCTION DISPLAY "STANDARD" SCREEN

The standard screen fig. 14 can display the following information:

A Date

B Possible Dualdrive electric power steering engagement

C Sport driving mode indication (for versions/ markets, where provided)

D Time

E Milometer (display of distance travelled in kilometres/miles)

F Possible ice on the road indication

G Outside temperature

H Scheduled servicing interval

I Headlight alignment position (only with dipped headlights on)

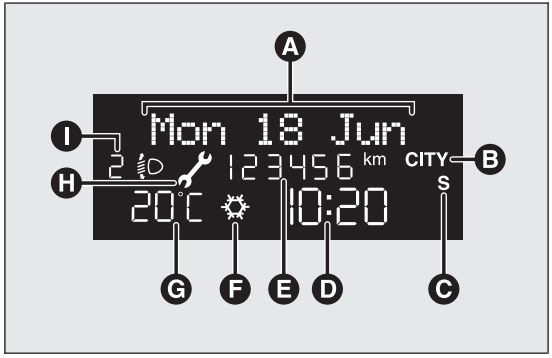

fig. 14 F0Q3245

CONTROL BUTTONS

▲ **fig. 15:** to scroll through the screen and the options upwards or to increase the value displayed.

MODE: press briefly to access the menu and/or go to next screen or confirm the desired selection. Hold down to go back to the standard screen.

▼ **:** to scroll through the screen and the options downwards or to decrease the value displayed.

IMPORTANT The ▲ and ▼ buttons activate different functions according to the following situations:

❒ within the menu, they allow you to scroll up and down through the options;

❒ during settings operations, they increase or decrease values.

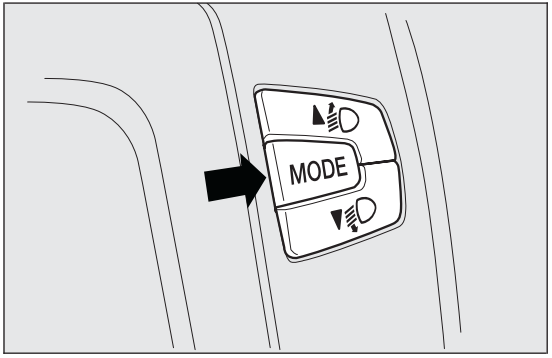

fig. 15 F0Q0643

IMPORTANT When one of the front doors is opened, the display is activated, showing the time and mileage for a few seconds.

SETUP MENU

The menu comprises a series of functions which can be selected using the ▲ and ▼ buttons to access the different selection and setting (setup) operations indicated below.

Some options have a submenu.

The Setup Menu can be activated by pressing the MODE button briefly.

If the Radionavigator is installed, only the following functions can be adjusted/set from the instrument panel: "Lighting", "Speed beep", "Headlight sensor" (for versions/markets, where provided), "Belt buzzer" and "Passenger airbag". The other functions are shown on the Radionavigator display. You can set and adjust them there.

The menu comprises the following options:

❒ LIGHTING

❒ SPEED BEEP

❒ HEADLIGHT SENSOR (for versions/markets, where provided)

❒ TRIP B ACTIVATION/DATA

❒ SET TIME

❒ SET DATE

❒ FIRST PAGE (for versions/markets, where provided)

❒ SEE RADIO

❒ AUTOCLOSE

❒ UNITS OF MEASUREMENT

❒ LANGUAGE

❒ WARNINGS VOLUME

❒ BUTTON VOLUME

❒ SEAT BELT BEEP/BUZZ.

❒ SERVICE

❒ AIRBAG/PASSENGER BAG

❒ CORNERING LIGHTS (for versions/markets, where provided)

❒ EXIT MENU

Selecting an option from the main menu without a submenu:

❒ briefly press the MODE button to select the main menu option that needs to be changed;

❒ press buttons ▲ or ▼ (with single presses) to select the new setting;

❒ briefly press the MODE button to store the new setting and at the same time go back to the previously selected menu option.

Selecting an option from the main menu with a submenu:

❒ briefly press the MODE button to display the first submenu option;

❒ press buttons ▲ or ▼ (with single presses) to scroll through all the submenu options;

❒ briefly press the MODE button to select the displayed submenu option and to open the relevant settings menu;

❒ press buttons ▲ or ▼ (with single presses) to select the new setting for this submenu option;

❒ briefly press the MODE button to store the new setting and at the same time go back to the previously selected submenu option.

MENU ITEMS

Lighting (Interior light adjustment)

With the side lights on, this function is used to set the brightness of the instrument panel, radio controls and dual zone automatic climate control system controls (for versions/markets where provided) to 8 levels.

Proceed as follows to adjust the brightness:

❒ briefly press the MODE button: the previously set level flashes on the display;

❒ press button ▲ or ▼ to set the required brightness level;

❒ briefly press the MODE button to return to the menu screen or hold the button down to return to the standard screen without storing.

Speed Beep (Speed limit)

This function is used to set the car speed limit (km/h or mph); the driver is immediately alerted when this limit is exceeded (see section “Warning lights and messages”).

To set the desired speed limit, proceed as follows:

❒ press the MODE button briefly, the display shows the dedicated message;

❒ press the ▲ or ▼ button to select speed limit activation (On) or deactivation (Off);

❒ if the function has been activated (On), press the ▲ or ▼ buttons to select the desired speed limit and then press MODE to confirm.

IMPORTANT Setting is possible between 30 and 200 km/h, or 20 and 125 mph, according to the previously set unit. See the "Units of measurement adjustment (Units of measurement)" paragraph described below. The setting will increase/decrease by 5 units each time button ▲/▼ is pressed. Hold down the ▲/▼ button to automatically increase/decrease the setting rapidly. Complete the adjustment with single presses of the button when you approach the desired value.

Briefly press the MODE button to return to the menu screen or hold the button down to return to the standard screen without storing.

To cancel the setting, proceed as follows:

❒ briefly press button MODE, (On) will flash on the display;

❒ press button ▼, (Off) will flash on the display;

❒ press the MODE button briefly to return to the menu screen or hold the button down to return to the standard screen without storing.

Headlight sensor (Automatic headlight/dusk sensor sensitivity adjustment)
(for versions/markets, where provided)

This function is used to turn the headlights on or off according to external lighting conditions.

The headlight sensor sensitivity can be adjusted according to 3 levels (level 1 = minimum sensitivity, level 2 = average sensitivity, level 3 = maximum sensitivity). The higher the sensitivity set, the lesser is the external light variation needed to switch the lights on (e.g. with a setting on level 3 at sunset the headlights come on in advance in relation to levels 1 and 2).

Proceed as follows to set the desired adjustment:

❒ briefly press the MODE button: the previously set level flashes on the display;

❒ press ▲ or ▼ to make your choice;

❒ press the MODE button briefly to return to the menu screen or hold the button down to return to the standard screen without storing.

Cornering lights (Activation/deactivation of "Cornering lights") (fog light with cornering function)
(for versions/markets where provided)

This function activates/deactivates the cornering lights.

To activate/deactivate (On/Off) the lights, proceed as follows:

❒ press the MODE button briefly, the display will show "On" or "Off" flashing depending on the previous setting;

❒ press ▲ or ▼ to make your choice;

❒ briefly press the MODE button to return to the menu screen or hold the button down to return to the standard screen without storing.

Activation/Trip B data (Activating Trip B)

This function can be used to activate (On) or deactivate (Off) the Trip B display (partial trip). For further information see “Trip computer” in this section.

Proceed as follows to switch the function on/off:

❒ briefly press the MODE button: On or Off flashes on the display (according to the previous setting);

❒ press ▲ or ▼ to make your choice;

❒ briefly press the MODE button to return to the menu screen or hold the button down to return to the standard screen without storing.

Time adjustment (Clock adjustment)

This function enables to set the clock through two submenus: “Time” and “Format”.

To carry out the adjustment, proceed as follows:

❒ briefly press the MODE button and two submenus, "Time" and "Format", are displayed;

❒ press the ▲ or ▼ button to switch between the two submenus;

❒ once you have selected the submenu to be changed, press the MODE button briefly;

❒ when you select “Time”, briefly pressing the MODE button makes the hours flash on the display;

❒ press the ▲ or ▼ button to make the adjustment;

❒ briefly press the MODE button: “minutes” starts flashing on the display;

❒ press the button ▲ or ▼ for setting.

IMPORTANT The setting will increase or decrease by one unit each time the button ▲ or ▼ is pressed. Hold down the button to increase/decrease the setting rapidly and automatically. Complete the adjustment with single presses of the button when you approach the desired value.

If you enter the "Format" submenu, pressing the MODE button briefly makes the display format flash on the display;

❒ Press button ▲ or ▼ to select “24h” or “12h”.

❒ when you have made the adjustment, briefly press the MODE button to go back to the submenu screen or hold the button down to go back to the main menu screen without storing.

❒ hold down the MODE button again to return to the standard screen or to the main menu according to where you are in the menu.

When you have made the adjustment, briefly press the MODE button to go back to the submenu screen or hold the button down to go back to the main menu screen without storing.

Set date (Setting the date)

Using this function it is possible to update the date (day - month - year).

Proceed as follows to start the update:

❒ briefly press the SET button: the “year” will flash on the display;

❒ press the ▲ or ▼ button to make the adjustment;

❒ briefly press the SET button: the “month” will flash on the display;

❒ press the ▲ or ▼ button to make the adjustment;

❒ briefly press the SET button: the “day” will flash on the display;

❒ press the button ▲ or ▼ for setting.

IMPORTANT The setting will increase or decrease by one unit each time the button ▲ or ▼ is pressed. Hold down the button to increase/decrease the setting rapidly and automatically. Complete the adjustment with single presses of the button when you approach the desired value.

Briefly press the MODE button to return to the menu screen or hold the button down to return to the standard screen without storing.

First page (display of information on the main screen)

(for versions/markets, where provided)

This function allows you to choose the information you would like to display on the main screen.

You can choose to display the date or the turbocharger boost pressure.

To make your choice, proceed as follows:

❒ briefly press the MODE button: "First page" will appear on the display;

❒ briefly press the MODE button again to display the "Date" and "Engine info" options;

❒ press ▲ or ▼ to select the information you wish to see on the main page of the display;

❒ press the MODE button briefly to return to the menu screen or hold the button down to return to the standard screen without storing.

When the key is turned to MAR-ON and the initial check stage is over, the display will show the information set previously via the “First page” menu function.

See radio (Audio information display)

With this function the display shows information about the sound system.

❒ Radio: selected radio station frequency or RDS message, automatic tuning activation or AutoSTore;

❒ Audio CD, MP3 CDs: track number;

❒ CD Changer: CD number and track number;

To show the radio information on the display (On) or clear it (Off), proceed as follows:

❒ briefly press the MODE button, the display will show "On" or "Off" flashing depending on the previous setting;

❒ press ▲ or ▼ to make your choice;

❒ briefly press the MODE button to return to the menu screen or hold the button down to return to the standard screen without storing.

Autoclose (Automatic central locking with the car in motion)

When activated (On), this function locks the doors automatically when the vehicle speed exceeds 20 km/h.

Proceed as follows to activate or deactivate this function:

❒ briefly press the MODE button to display a submenu;

❒ briefly press the MODE button: "On" or "Off" flashes on the display according to the previous setting;

❒ press ▲ or ▼ to make your choice;

❒ press the MODE button briefly to return to the submenu screen or hold the button down to return to the main menu screen without storing;

❒ hold down the MODE button again to return to the standard screen or to the main menu according to where you are in the menu.

Unit of measurement (Setting the unit of measurement)

With this function it is possible to set the units through three submenus: "Distances", "Consumption" and "Temperature". To set the desired unit, proceed as follows:

❒ briefly press the MODE button to display the three submenus;

❒ press button ▲ or ▼ to navigate through the three submenus;

❒ once you have selected the submenu to be changed, press the MODE button briefly;

❒ when you select the “Distances” submenu, briefly pressing the MODE button makes the display show “km” or “mi” depending on the previous setting;

❒ press ▲ or ▼ to make your choice;

❒ when you select the “Consumption” submenu, pressing the MODE button makes "km/l", "l/100 km" or "mpg" appear on the display depending on the previous setting;

If the set distance unit is "km", the fuel consumption unit will be displayed in km/l or l/100 km.

If the set distance unit is “mi” the fuel consumption unit will be displayed in “mpg”.

❒ press ▲ or ▼ to make your choice;

❒ when you enter the “Temperature” submenu, briefly pressing the MODE button makes "°C" or "°F" appear on the display depending on the previous setting;

❒ press ▲ or ▼ to make your choice;

When you have made the adjustment, briefly press the MODE button to go back to the submenu screen or hold the button down to go back to the main menu screen without storing.

Hold down the MODE button again to return to the standard screen or to the main menu according to where you are in the menu.

Language (Language selection)

Display messages can be shown in different languages: Italian, German, English, Spanish, French, Portuguese and Dutch.

To set the desired language, proceed as follows:

❒ briefly press the MODE button: the previously set language starts flashing on the display;

❒ press ▲ or ▼ to make your choice;

❒ briefly press the MODE button to return to the menu screen or hold the button down to return to the standard screen without storing.

Warnings volume (Adjusting the failure/ warning acoustic signal volume)

With this function the volume of the buzzer which accompanies the display of any failure/warning can be adjusted to 8 levels.

To set the desired volume, proceed as follows:

❒ press the MODE button briefly, making the display flash the previously set volume "level";

❒ press the ▲ or ▼ button to make the adjustment;

❒ briefly press the MODE button to return to the menu screen or hold the button down to return to the standard screen without storing.

Button volume (adjusting the button volume)

This function allows the volume of the acoustic signal that accompanies MODE, ▲ and ▼ button presses to 8 levels

To set the desired volume, proceed as follows:

❒ press the MODE button briefly, making the display flash the previously set volume "level";

❒ press the ▲ or ▼ button to make the adjustment;

❒ press the MODE button briefly to return to the menu screen or hold the button down to return to the standard screen without storing.

Seat belt buzzer (Buzzer activation for SBR indication)

This function can be displayed only after a Fiat Dealership has deactivated the SBR system (see the "Safety" section in the "SBR system" paragraph).

To reactivate this function, proceed as follows:

❒ briefly press the MODE button, the display shows "Off" flashing. Press the ▲ or ▼ button and "On" will appear;

❒ briefly press the MODE button to return to the submenu screen or hold the button down to return to the main menu screen without storing.

Service (Scheduled servicing)

Using this function you can display information about the mileage intervals for car servicing.

To consult this information, proceed as follows:

❒ briefly press the MODE button: the display shows when servicing is due in km or mi according to the previous setting (see paragraph "Units of measurement");

❒ briefly press the MODE button to go back to the menu screen or hold the button down to go back to the standard screen.

Note According to the "Scheduled Servicing Plan", the car must be serviced every 35,000 km (or equivalent value in miles). This message is displayed automatically - when the key is turned to MAR-ON - 2,000 km (or equivalent value in miles) before these deadlines and reappears every 200 km (or equivalent value in miles). Below 200 km servicing indications are more frequent. The indication will appear in kilometres or miles depending on the unit of measurement settings. When one of the next scheduled deadlines is approaching, the word "Service" will appear on the display, followed by the number of kilometres or miles left, when the key is turned to MAR-ON. Contact a Fiat Dealership. The operations in the "Scheduled servicing plan" will be performed and the message will be reset.

Airbag/Passenger bag

This function is used to activate/deactivate the passenger side airbag.

Proceed as follows:

- ❒ press the MODE button and, after the message "Bag pass: Off" (to deactivate) or "Bag pass: On" (to activate) is displayed by pressing the ▲ and ▼ buttons, press the MODE button again;
- ❒ a confirmation request message will appear on the display;
- ❒ by pressing the ▲ or ▼ buttons, select ("Yes") (to confirm activation/deactivation) or ("No") (to cancel);
- ❒ press the MODE button briefly and a message confirming the selection will be displayed, then you will return to the menu screen, or hold the button down to return to the standard screen without storing.

Exit menu

The last function closing the cycle of settings listed in the menu screen.

Press the MODE button briefly to return to the standard screen without storing.

Press the ▼ button to go back to the first menu option ("Speed Beep").

TRIP COMPUTER

General information

The Trip computer is used to display information on car operation when the key is turned to MAR-ON. Two separate trips, called “Trip A” and “Trip B”, are provided to monitor the entire mission (journey) in a reciprocally independent manner.

Both functions can be reset (reset - start of a new journey).

“Trip A” is used to display the figures relating to:

❒ Range

❒ Distance covered

❒ Average consumption

❒ Instantaneous consumption

❒ Average speed

❒ Trip time (driving time).

“Trip B” is used to display the figures relating to:

❒ Distance travelled B

❒ Average consumption B

❒ Average speed B

❒ Trip time B (driving time).

Note The “Trip B” function may be disabled (see “Activating Trip B”). The “Range” and “Instant consumption" parameters cannot be reset.

Values displayed

Range

This indicates the approximate distance which can be travelled with the amount of fuel present in the tank. “- - - -” will appear on the display in the following cases:

❒ range value lower than 50 km (or 30 mi)

❒ car parked with engine running for an extended period.

IMPORTANT The range value variation can be affected by several factors: driving style, type of route (motorway, urban, mountain roads, etc.), conditions of use (load, tyre pressures, etc.). Trip planning must therefore take the above into account.

Distance covered

Shows the distance covered since the start of the new journey.

Average consumption

Shows the approximate average fuel consumption since the start of the new journey.

Instantaneous consumption

This indicates the fuel consumption. The value is constantly updated. The display will show “- - - -” if the car is parked with the engine running.

Average speed

This shows the average car speed as a function of the overall time elapsed since the start of the new journey.

Trip time

The time elapsed since the start of a new journey.

TRIP BUTTON

The TRIP button is located on the right hand stalkfig. 16. With the ignition key turned to MAR-ON, this button allows you to view the previously described parameters and also zero them to begin a new mission:

❒ short press: display various values;

❒ long press: reset values and start a new journey.

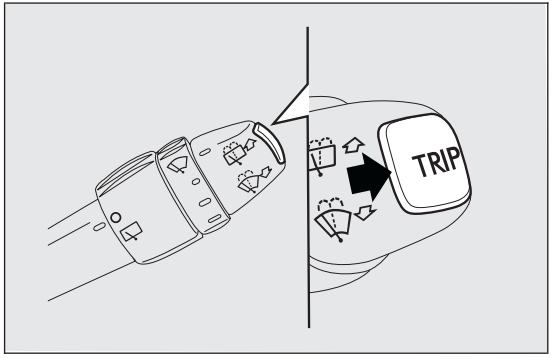

fig. 16 F0Q0647

New mission

This begins after a reset:

❒ "manual" resetting by the user, by pressing the relevant button;

❒ automatically when the distance travelled reaches 99,999.9 km or when the journey time reaches 99.59 (99 hours and 59 minutes);

❒ after disconnection/reconnection of the battery.

IMPORTANT The reset operation when "Trip A" or "Trip B" details are being displayed only resets the values associated with the function displayed.

Start of journey procedure

With ignition key at MAR, press and hold down the TRIP button for more than 2 seconds to reset.

Exiting the Trip Function

You can automatically exit the TRIP function once all the values have been displayed or by holding the MODE button down for more than 1 second.

SEATS

FRONT SEATS WITH MANUAL ADJUSTMENT

Longitudinal adjustment fig. 17

Lift lever A (on the seat internal side) and push the seat forwards or backwards: in driving position your arms should rest on the rim of the steering wheel.

Height adjustment fig. 17

Move lever B upwards or downwards to achieve the required height.

IMPORTANT Adjustment must be carried out only when seated in the relevant seat.

Backrest angle adjustment fig. 17

Turn knob C.

Lumbar adjustment fig. 17
(for versions/markets, where provided)

The position of the back against the seat backrest can be adjusted by turning knob D.

All adjustments must be made with the car stationary.

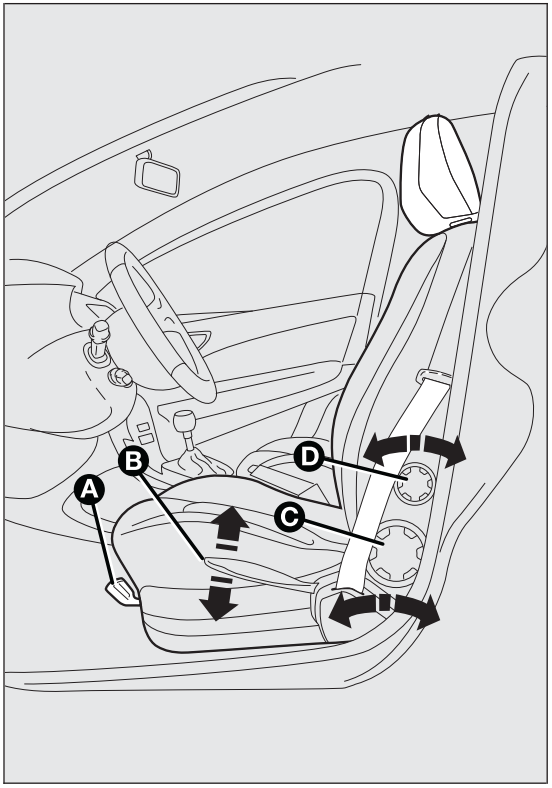

fig. 17 F0Q0654

The fabric upholstery of your car has been designed to withstand wear deriving from common use of the car. You are however recommended to avoid strong and/or continuous scratching with clothing accessories such as metal buckles, studs, Velcro fastenings and the like, as these items cause stress of the cover fabric that could lead to yarn breaking and damage the upholstery.

Once you have released the adjustment lever, always check that the seat is locked on the guides by trying to move it back and forth. If the seat is not locked into place, it may unexpectedly slide and cause the driver to lose control of the car.

HEAD RESTRAINTS

FRONT

These are height-adjustable and lock into place automatically.

❒ Upward adjustment: lift the head restraint until it clicks into place.

❒ Downward adjustment: press button A fig. 18 and lower the head restraint.

On some versions the front head restraints are equipped with an "Anti-Whiplash" device, which reduces the distance between head and head restraint in the event of a rear shunt, thus mitigating the "whiplash" effect.

The "Anti-Whiplash" type front head restraints may move when the backrest is pressed by the occupant's torso or hand. This behaviour is caused by the system and should not be considered a malfunction.

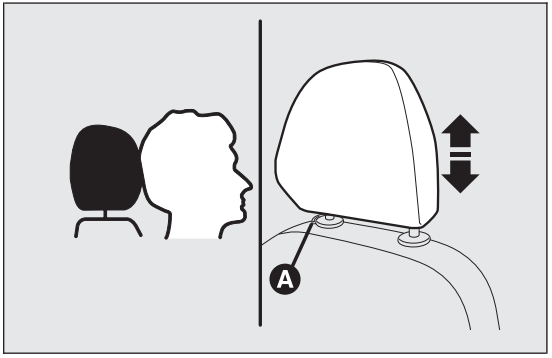

fig. 18 F0Q0655

WARNING

Head restraints must be adjusted so that the head, rather than the neck, rests on them. Only when they are adjusted in this manner can they serve their intended purpose.

WARNING

To take best advantage of the protection provided by the head restraint, adjust the seat backrest so that you are sitting up straight and your head is as close to the head restraint as possible.

REAR

The car is equipped with two head restraints for the side seats and on some versions a head restraint is also provided for the central seat.

To extract the head restraints, raise them until you hear the click (which indicates they are in the position of use, 'fully raised').

To bring them back to the position of non-use, press button A fig. 19 and push them down into the backrest.

IMPORTANT If the rear seats are used, always set the head restraints in the "fully raised" position.

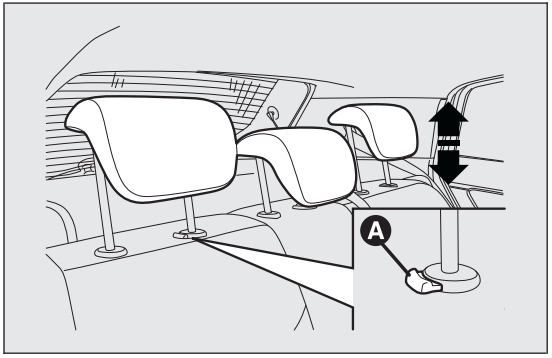

fig. 19 F0Q0656

STEERING WHEEL

It can be adjusted both axially and vertically.

Release the lever A fig. 20 pulling it towards the steering wheel, then adjust it in the most suitable position and lock it pushing the lever A fully forwards.

WARNING

It is absolutely forbidden to carry out any aftermarket operation involving steering system or steering column modifications (e.g. installation of anti-theft device) that could badly affect performance and safety, invalidate the warranty and also result in the car not meeting type-approval requirements.

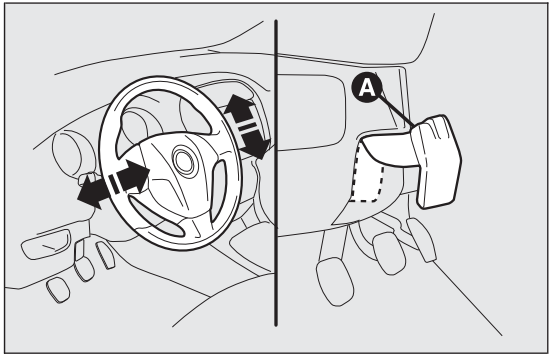

fig. 20 F0Q0657

WARNING

All adjustments must be carried out only with the vehicle stationary and engine off.

REAR VIEW MIRRORS

INTERNAL MIRROR

The mirror is fitted with a safety device that causes its release in the event of a violent impact with the passenger.

Lever A fig. 21 can be used to move the mirror to two different positions: normal or antiglare.

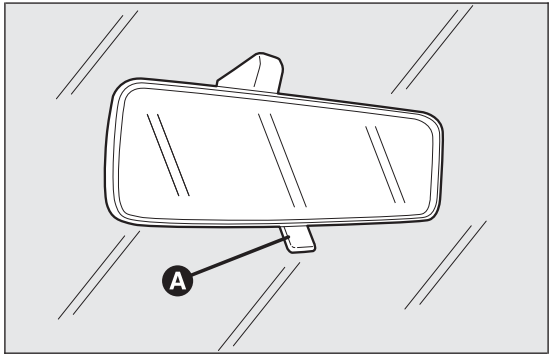

fig. 21 F0Q0659

DOOR MIRRORS

Mirror manual folding

If necessary (for example when the mirror causes difficulty in narrow spaces), it is possible to fold the mirrors by moving them from position A fig. 22 to position B.

When driving, these mirrors must always be in position A.

As the driver's door mirror is curved, it may slightly alter the perception of distance.

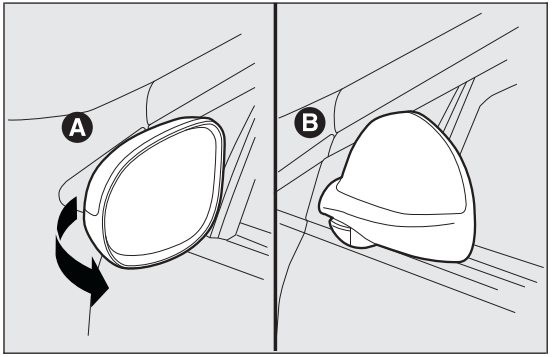

fig. 22 F0Q0658

Electric adjustment

You can adjust the door mirrors only when the ignition key is turned to MAR-ON.

Proceed as follows:

❒ use selector A fig. 23 to select the mirror (left or right) to be adjusted;

❒ adjust the mirror using joystick B in the four directions.

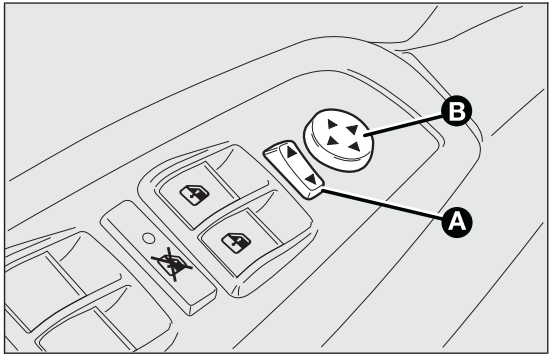

fig. 23 F0Q0623

Mirror electric folding

(for versions/markets, where provided)

You can fold the door mirrors only when the ignition key is turned to MAR-ON.

Proceed as follows:

❒ position selector A fig. 24 in neutral position (no mirror selection);

❒ fold the mirror using joystick B in the side directions fig. 24;

❒ press joystick B again to restore the mirrors to driving position.

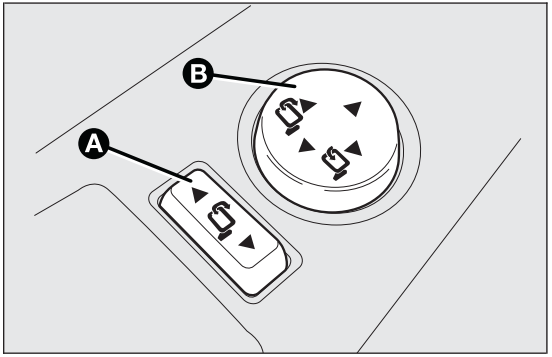

fig. 24 F0Q0425

CLIMATE CONTROL/HEATING SYSTEM

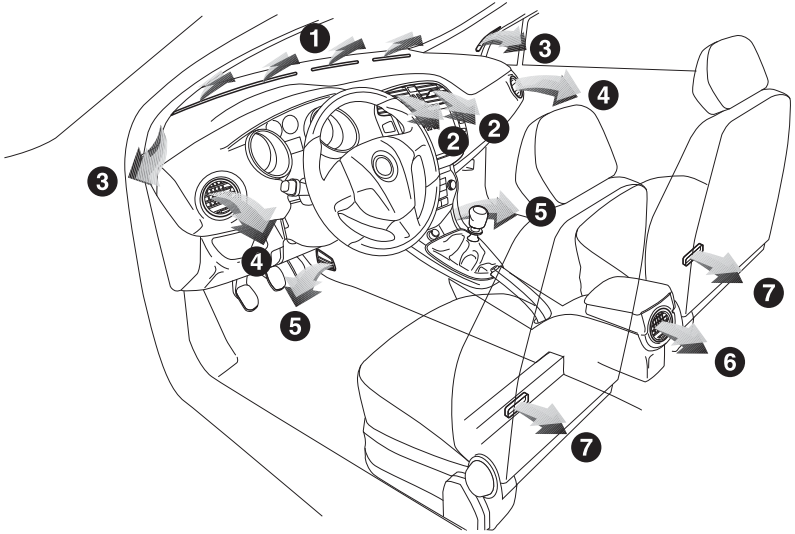

fig. 25 F0Q0668

1. Fixed upper diffuser for windscreen defrosting or demisting - 2. Adjustable central diffuser - 3. Fixed diffusers for side window defrosting or demisting - 4. Adjustable and directable side diffusers - 5. Lower diffusers - 6. Directable and adjustable rear vent - 7. Fixed rear diffusers for footwell.

DIFFUSERS

ADJUSTABLE SIDE VENTS AND DIFFUSERS

A Fixed diffuser for side window fig. 26.

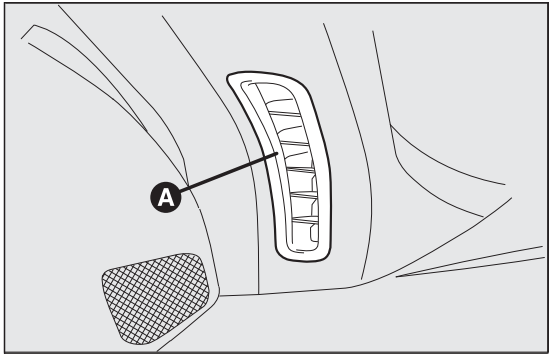

fig. 26 F0Q0626

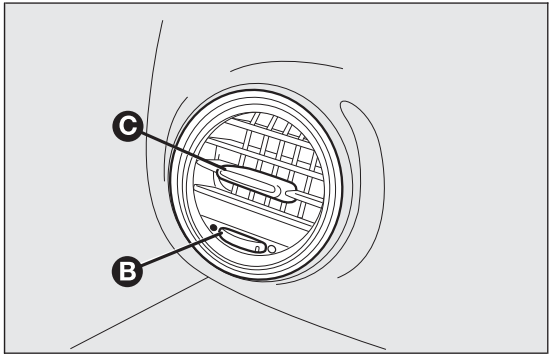

fig. 27 F0Q0625

B Air flow adjustment control fig. 27:

- ● = Fully closed
- ○ = Fully open.

C Lateral and vertical air flow adjustment control. fig. 27

CENTRAL DIFFUSERS

A Lateral and vertical air flow adjustment controls fig. 28.

B Air flow adjustment controls fig. 28:

- ● = Fully closed
- ○ = Fully open.

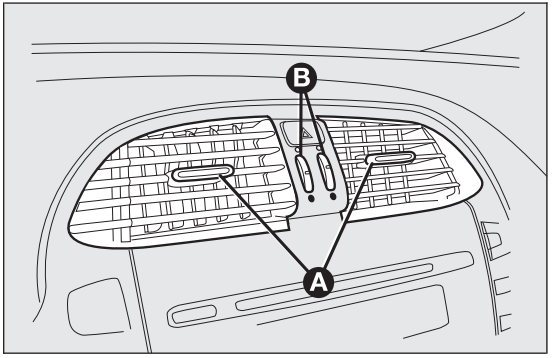

fig. 28 F0Q0627

REAR DIFFUSER

(for versions/markets, where provided)

A Lateral and vertical air flow adjustment controls fig. 29.

B Air flow adjustment control fig. 29:

● = Fully closed

○ = Fully open.

On some versions, a storage compartment is fitted instead of the rear diffuser.

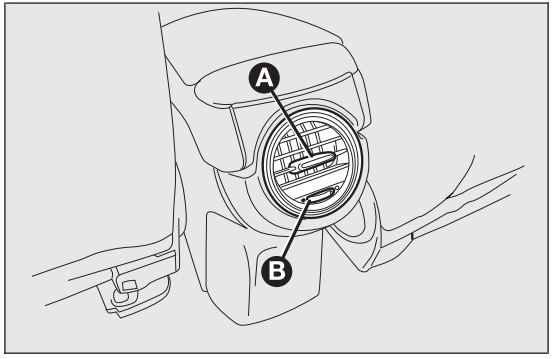

fig. 29 F0Q0750

HEATING AND VENTILATION

CONTROLS

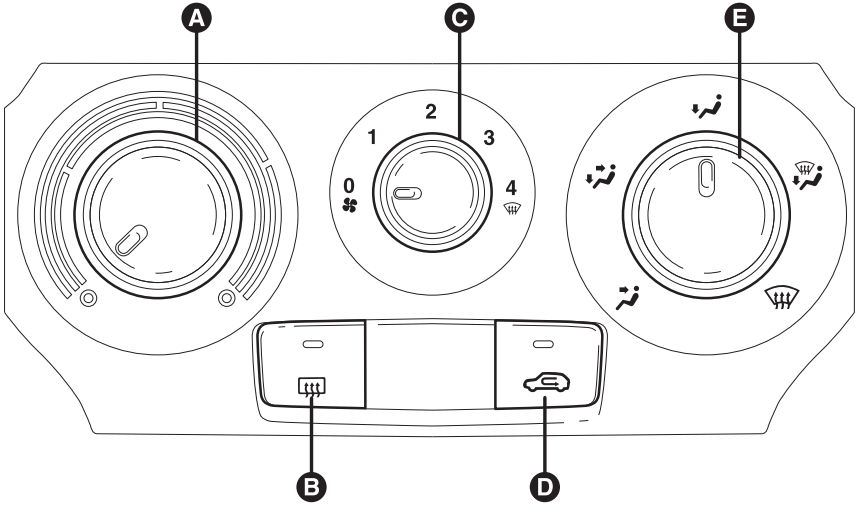

fig. 30

F0Q0609

A air temperature adjustment knob (hot/cold air mixing)

B heated rear window on/off button

C fan activation knob

D internal air recirculation on/off button

E air distribution knob.

PASSENGER COMPARTMENT HEATING

Proceed as follows:

❒ turn knob A to the red section;

❒ turn knob C to the required speed;

❒ turn knob E to:

- to warm the feet and demist the windscreen at the same time
- to warm the feet and keep the face cool (bi-level function)
- to warm the feet of those in the front and rear seats

❒ to turn off internal air recirculation (LED on button off).

FAST FRONT WINDOW DEMISTING/ DEFROSTING

Proceed as follows:

❒ turn knob A fully to the right;

❒ turn knob C to ;

❒ turn knob E to ;

❒ turn off internal air recirculation (LED on button off).

After demisting/defrosting, operate the controls to maintain optimum visibility conditions.

Window demisting

In the event of considerable external moisture and/or rain and/or large differences in temperature inside and outside the passenger compartment, perform the following preventive window demisting procedure:

❒ to turn off internal air recirculation (LED on button off);

❒ turn knob A to the red section;

❒ turn knob C to the second speed level;

❒ turn knob E to or to if there is no sign of the windows steaming up.

HEATED REAR WINDOW AND DOOR MIRRORS DEMISTING/DEFROSTING

Press button to activate this function; when this function is activated, the button LED lights up.

This function is timed and will deactivate automatically after 20 minutes. Press the button again to switch the function off in advance.

IMPORTANT Do not apply stickers on the inside of the rear window over the heating filaments to avoid damage.

FAN SPEED ADJUSTMENT

To ventilate the passenger compartment properly, proceed as follows:

❒ fully open the central and side air diffusers;

❒ turn knob A to the blue section;

❒ turn knob C to the required speed;

❒ turn knob E to ;

❒ turn off internal air recirculation (LED on button off).

INTERNAL AIR RECIRCULATION ACTIVATION

Press button : when the function is on, the button LED lights up. It is advisable to switch the internal air recirculation on while standing in queues or in tunnels to prevent the introduction of polluted air. However, it is better not to use the function for long periods, particularly if there are many people on board, to prevent the windows from misting.

IMPORTANT Internal air recirculation makes it possible to reach the required heating or cooling conditions more quickly depending on the mode selected. Do not use the internal air recirculation function on rainy/cold days as it would considerably increase the possibility of the windows misting.

ADDITIONAL HEATER

(for versions/markets, where provided)

This device warms up the passenger compartment more quickly when it is very cold and the engine coolant temperature is low.

The additional heater comes on automatically when the engine is started, if knob A is turned to the last red sector and the fan (knob C) is at least at the first speed level.

The heater switches off automatically when the required comfort conditions are achieved.

IMPORTANT The heater will not turn on if the battery voltage is too low.

MANUAL CLIMATE CONTROL SYSTEM

(for versions/markets, where provided)

CONTROLS

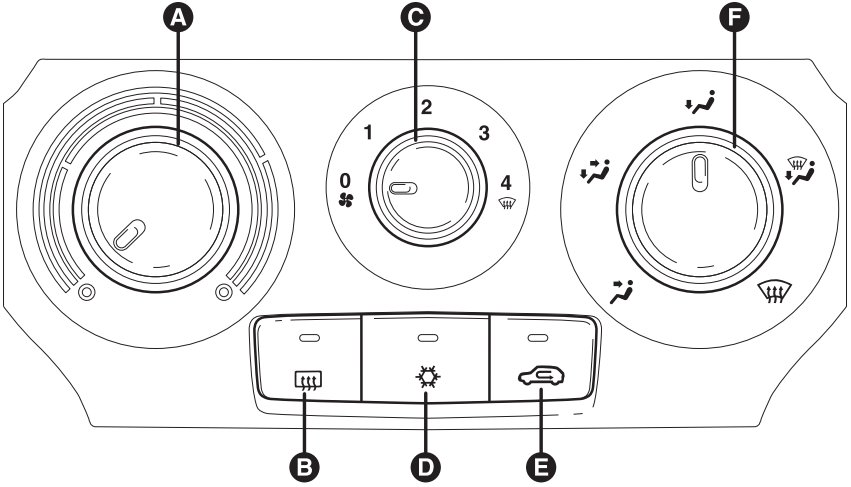

fig. 31 F0Q0610

A air temperature adjustment knob (hot/cold air mixing)

B heated rear window on/off button

C fan activation knob

D climate control system compressor on/off button

E internal air recirculation on/off button

F air distribution knob.

PASSENGER COMPARTMENT HEATING

Proceed as follows:

❒ turn knob A to the red section;

❒ turn knob C to the required speed;

❒ turn knob F to:

to warm the feet and demist the windscreen at the same time

to warm the feet and keep the face cool (bi-level function)

to warm the feet of those in the front and rear seats

❒ to turn off internal air recirculation (LED on button off).

FAST FRONT WINDOW DEMISTING/ DEFROSTING

Proceed as follows:

❒ press the button

❒ turn knob A fully to the right;

❒ turn knob C to ;

❒ turn knob E to ;

❒ turn off internal air recirculation (LED on button off).

After demisting/defrosting, operate the controls to maintain optimum visibility conditions.

Window demisting

In the event of considerable external moisture and/or rain and/or large differences in temperature inside and outside the passenger compartment, perform the following preventive window demisting procedure:

❒ press the button

❒ turn off internal air recirculation (LED on button off);

❒ turn knob A to the red section;

❒ turn knob C to the second speed level;

❒ turn knob F to or to if there is no sign of the windows steaming up.

The climate control system is very useful for demisting the windows more quickly: just carry out the above procedure and activate the system by pressing button .

HEATED REAR WINDOW AND DOOR MIRRORS DEMISTING/DEFROSTING

Press button to activate this function: when this function is activated, the button LED lights up.

This function is timed and will deactivate automatically after 20 minutes. Press the button again to switch the function off in advance.

IMPORTANT Do not apply stickers on the inside of the rear window over the heating filaments to avoid damage.

FAN SPEED ADJUSTMENT

To ventilate the passenger compartment properly, proceed as follows:

❒ fully open the central and side air diffusers;

❒ turn knob A to the blue section;

❒ turn knob C to the required speed;

❒ turn knob E to ;

❒ turn off internal air recirculation (LED on button off).

INTERNAL AIR RECIRCULATION ACTIVATION

Press button : when the function is on, the button LED lights up.

It is advisable to switch the internal air recirculation on while standing in queues or in tunnels to prevent the introduction of polluted air. However, it is better not to use the function for long periods, particularly if there are many people on board, to prevent the windows from misting.

IMPORTANT Internal air recirculation makes it possible to reach the required heating or cooling conditions more quickly depending on the mode selected. It is not advisable to switch the internal air recirculation on when it is rainy/cold or the windows might steam up, especially if the climate control system is not turned on.

CLIMATE CONTROL SYSTEM (cooling)

Proceed as follows:

❒ turn knob A to the blue section;

❒ turn knob C to the required speed;

❒ turn knob F to ;

❒ press and buttons (button LEDs on).

Cooling adjustment

Proceed as follows:

❒ deactivate the button (LED on button off);

❒ turn knob A rightwards to increase the temperature;

❒ turn knob C leftwards to reduce the fan speed.

ADDITIONAL HEATER
(for versions/markets, where provided)

This device warms up the passenger compartment more quickly when it is very cold and the engine coolant temperature is low.

The additional heater comes on automatically when the engine is started, if knob A is turned to the last red sector and the fan (knob C) is at least at the first speed level.

The heater switches off automatically when the required comfort conditions are achieved.

IMPORTANT The heater will not turn on if the battery voltage is too low.

SYSTEM MAINTENANCE

In winter, the climate control system must be turned on at least once a month for about 10 minutes. Before summer, have the system checked at a Fiat Dealership.

AUTOMATIC DUAL ZONE CLIMATE CONTROL SYSTEM

(for versions/markets, where provided)

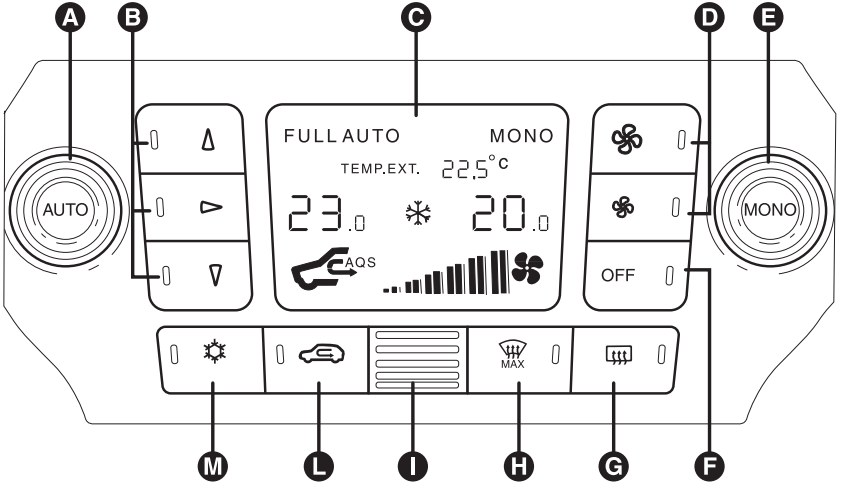

fig. 32

F0Q0611

DESCRIPTION

The car is equipped with a dual zone climate control system which allows you to adjust the air temperature on the driver's and the passenger's side separately.

The system has an AQS function (Air Quality System), which automatically activates internal air recirculation when the outside air is polluted (e.g. in traffic queues and tunnels).

CONTROLS

A AUTO function activation button (automatic operation) and driver side temperature adjustment knob

B air distribution selection button

C climate control system information display

D fan speed increase/decrease

E MONO function activation button (set temperature alignment) and passenger side temperature adjustment knob

F climate control system on/off button

G heated rear window on/off button

H MAX-DEF function activation button (rapid defrosting/demisting of front windows)

I internal air temperature sensor

L internal air recirculation and AQS function on/off button

M climate control system compressor on/off button

SWITCHING ON THE CLIMATE CONTROL SYSTEM

The system can be activated by pressing any of the buttons; it is, however, advisable to set the desired temperatures on the

display, then press the AUTO button.

The climate control system allows you to customise the temperatures requested (driver side and passenger side) with a maximum difference of 7°C.

The climate control system compressor works only with the engine running and an outside temperature of above 4°C.

AUTOMATIC OPERATION OF THE CLIMATE CONTROL SYSTEM (AUTO function)

Press the AUTO button; the system will automatically adjust:

❒ the amount of air introduced into the passenger compartment;

❒ the distribution of the air in the passenger compartment;

cancelling all previous manual adjustments.

During climate control system automatic operation, the words FULL AUTO appear on the display.

During automatic operation it is still possible to adjust the temperatures set and carry out the following operations manually:

❒ fan speed adjustment;

❒ air distribution selection;

❒ internal air recirculation and AQS function activation/deactivation;

❒ climate control system compressor activation.

WARNING

It is advisable not to use the internal air recirculation function when the outside temperature is low, because the windows could mist rapidly.

FAN SPEED ADJUSTMENT

Press button to increase/decrease the fan speed.

The 12 possible speeds are indicated by bars lighting up on the display:

❒ maximum fan speed = all bars lit

❒ minimum fan speed = one bar lit.

The fan can be disabled (no bars lit) only if the climate control system compressor has been switched off by pressing button .

To restore automatic fan speed control after a manual adjustment, press the AUTO button.

RAPID FRONT WINDOW DEMISTING/DEFROSTING (MAX-DEF function)

Press button to automatically activate the timed operation of all the functions required to rapidly demist/defrost the windscreen and front side windows.

The functions are:

❒ climate control system compressor activation (with an outside temperature of above 4°C);

❒ switching off, if previously on, of the internal air recirculation (LED on button off);

❒ activation of heated rear window (LED on button on) and door mirror heater coils;

❒ setting maximum air temperature;

❒ activation of air flow.

HEATED REAR WINDOW AND DOOR MIRRORS DEMISTING/DEFROSTING

Press button to activate: when this function is activated, the button LED switches on.

This function is timed and will deactivate automatically after 20 minutes. Press the button again to switch the function off in advance.

IMPORTANT Do not apply stickers on the inside of the rear window over the heating filaments to avoid damage.

IMPORTANT Press to introduce air from the outside (in this case the LED on the button should be off).

ACTIVATION OF INTERNAL AIR RECIRCULATION AND ENABLEMENT OF AQS FUNCTION (Air Quality System)

Press button . Internal air recirculation is carried out according to three possible operating modes:

- automatic control, signalled by the AQS sign on the display and the LED on button being off;
- forced deactivation (internal air recirculation always off with introduction of outside air), indicated by the LED on button being off;
- forced activation (internal air recirculation always on), signalled by the LED on button being lit.

When OFF button is pressed, the climate control system automatically activates internal air recirculation (the LED on button T should be on). It is still possible to activate outside air recirculation (LED on the button off) and vice versa, by pressing button T.

With the OFF button pressed (LED on the button is lit up), it is not possible to enable the AQS (Air Quality System) function.

IMPORTANT Internal air recirculation makes it possible to reach the required heating or cooling conditions more quickly depending on the mode selected. It is not advisable to switch the internal air recirculation on when it is rainy/cold to prevent the windows from misting, especially if the climate control system has not been activated. It is advisable to switch the internal air recirculation on whilst queuing or in tunnels to prevent the introduction of polluted air. Do not use the function for a long time, particularly if there are several passengers on board, to prevent the windows from misting.

AQS (Air Quality System) function activation

The AQS function (AQS sign on the display) automatically activates internal air recirculation when the outside air is polluted (e.g. in traffic queues and tunnels).

IMPORTANT With the AQS function active, after approx. 15 consecutive minutes of the internal air recirculation system functioning, the climate control system enables the intake of outside air for approximately 1 minute to freshen the air in the passenger compartment. This takes place regardless of the pollution level of the outside air.

SET TEMPERATURE ALIGNMENT (MONO function)

Press the MONO button to align the temperature between the driver side and passenger side.

Then turn the AUTO or MONO knob to increase/decrease the temperature between the two areas by the same amount.

Press MONO again to deactivate the function.

CLIMATE CONTROL SYSTEM COMPRESSOR ACTIVATION/ DEACTIVATION

Press the ❄ button to switch on the climate control system compressor.

Compressor engagement

❒ button LED ❄ on;

❒ ❄ symbol appears on display.

Compressor deactivation

❒ button LED ❄ off;

❒ ❄ symbol on display disappears;

❒ internal air recirculation excluded;

❒ AQS function disabled.

With the climate control system compressor switched off, air cannot be introduced into the passenger compartment that has a lower temperature than the outside air; in this case the ❄ symbol in the display will flash.

The deactivation of the climate control system compressor is memorised even after the engine has stopped. To reactivate the climate control system compressor, press the ❄ or AUTO button again: if you press AUTO, the other manual settings will be cancelled.

IMPORTANT In order to preserve the battery charge, the electronic climate control management permits a higher ventilation speed than minimum only if the engine is running at a speed greater than 750 rpm. When the speed drops below this threshold – possible when setting off, for example – the ventilation speed is automatically reduced to minimum.

AIR DISTRIBUTION SELECTION

Press one or more of these buttons ⬆/➡/⬇ to manually select one of the seven possible air distribution settings for the passenger compartment:

⬆ Air flow to the windscreen and front side window diffusers to demist/defrost them.

⬇ Air flow to the front and rear footwell diffusers. This air distribution allows the passenger compartment to be warmed up quickly.

⬆ ➡ ⬇ Air flow distribution between front and rear diffusers, centre/side dashboard diffusers, rear diffuser and windscreen and front side window demisting/defrosting diffusers.

➡ Air flow distribution to centre/side dashboard diffusers (passenger's body).

⬆ ⬇ Air flow distribution between footwell diffusers and windscreen and front side window defrosting/demisting diffusers. This distribution setting allows the passenger compartment to be warmed effectively and prevents the windows from misting.

➡ ⬇ Air flow distribution between footwell diffusers (hotter air) and centre/side dashboard diffusers and rear diffuser (cooler air).

⬆ ➡ Air flow distribution between centre/side dashboard diffusers, rear diffuser and windscreen and front side window demisting/defrosting diffusers. This distribution setting ventilates the passenger compartment well and prevents the windows from misting up.

IMPORTANT For the climate control system to function, at least one of the buttons ⬆/➡/⬇ must be operated. The system does not allow the deactivation of all the buttons ⬆/➡/⬇.

IMPORTANT Push the OFF button to turn the climate control system back on: in this way, all operating conditions memorised before switching off are restored.

To restore automatic control of the air distribution after a manual selection, press the AUTO button.

ADDITIONAL HEATER

(for versions/markets, where provided)

This device warms up the passenger compartment more quickly when it is very cold and the engine coolant temperature is low.

In these conditions, the device comes on automatically when the engine is started and the fan is on.

The heater switches off automatically when the required comfort conditions are achieved.

IMPORTANT The heater will not turn on if the battery voltage is too low.

SWITCHING OFF THE CLIMATE CONTROL SYSTEM

Press the OFF button.

The following information is shown on the display:

❒ OFF;

❒ outside temperature indication;

❒ internal air recirculation on indication (LED on button lit).

EXTERIOR LIGHTS

The left lever fig. 33 includes the controls for the exterior lights.

The exterior lights can only be switched on when the ignition key is at MAR-ON.

LIGHTS OFF

Ring nut turned to position O .

SIDE LIGHTS

Turn the ring nut to position ☼ .

The warning light switches on in the instrument panel.

DIPPED HEADLIGHTS

Turn the ring nut to position .

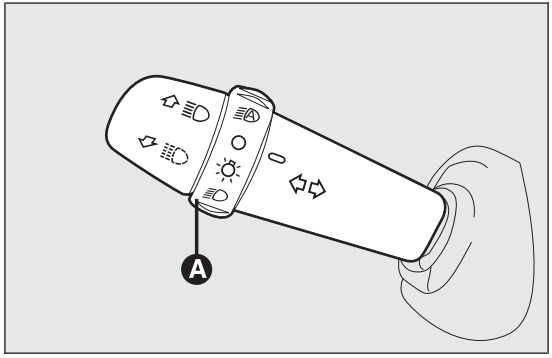

fig. 33 F0Q0649

The warning light switches on in the instrument panel.

MAIN BEAM HEADLIGHTS

With the ring nut at position, push the stalk forward towards the dashboard (stable position).

The warning light switches on in the instrument panel.

To turn the main beam headlights off, pull the stalk towards the steering wheel (dipped headlights will turn on).

PARKING LIGHTS

These lights can be turned on only with the ignition key at STOP or extracted by turning the ring nut on the left stalk first to position O and then to position ☼ or .

The warning light switches on in the instrument panel. Operate the direction indicator stalk to select the side (right or left).

FLASHING

Pull the stalk towards the steering wheel (unstable position) regardless of the position of the ring nut.

The warning light switches on in the instrument panel.

DIRECTION INDICATORS

Place the stalk in the (stable) position fig. 34:

❒ up (position 1): activates the right direction indicator

❒ down (position 2): activates the left direction indicator

Warning light ⇦ or ⇨ will flash in the instrument panel.

Direction indicators are switched off automatically when the steering wheel is straightened.

Lane change function

If you wish to signal a lane change, put the left stalk in the unstable position for less than half a second. The direction indicator on the side selected will flash five times and then switch off automatically.

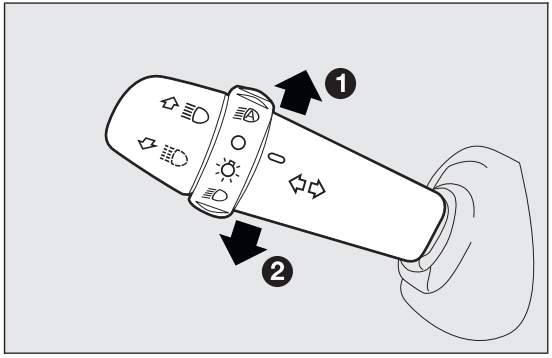

fig. 34 F0Q0650

"Cornering lights"

When the dipped headlights are on and the speed is below 40 km/h, if the steering wheel rotation angle is large or the direction indicators are on, a light (incorporated in the fog light) will come on on the relevant side to improve visibility at nighttime.

"FOLLOW ME HOME" DEVICE

This allows the space in front of the car to be lit up for a certain period of time.

Activation

With the ignition key turned to STOP or removed, pull the stalk fig. 35 towards the steering wheel within 2 minutes from when the engine is turned off.

At each single movement of the stalk, the lights will remain on for an extra 30 seconds up to a maximum of 210 seconds; then the lights are switched off automatically.

Each action of the stalk corresponds with the lighting of the warning light in the instrument panel (along with a message shown on the display) (see "Warning lights and messages" chapter).

Deactivation

Keep the stalk pulled towards the steering wheel for more than 2 seconds.

AUTOMATIC HEADLIGHT SENSOR (dusk sensor)

(for versions/markets, where provided)

It detects variations in brightness outside the vehicle depending on the light sensitivity setting: the greater the sensitivity, the less outside light needed to activate the exterior lights being turned on.

The sensitivity of the dusk sensor may be adjusted by means of the "Setup menu" on the instrument panel.

Activation

Turn the ring nut to position fig. 36: this turns the side lights and the dipped headlights on simultaneously and automatically depending on the exterior brightness conditions.

The headlights can only be flashed with the sensor on.

Deactivation

The dipped headlights will switch off followed after approximately 10 seconds by the side lights, when the sensor is deactivated.

The sensor is not capable of detecting the presence of fog therefore, in these circumstances, the lights have to be turned on manually.

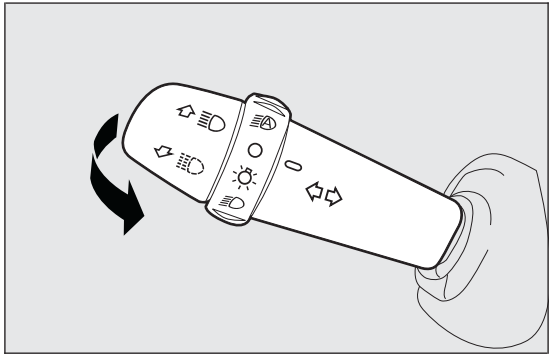

fig. 35 F0Q0651

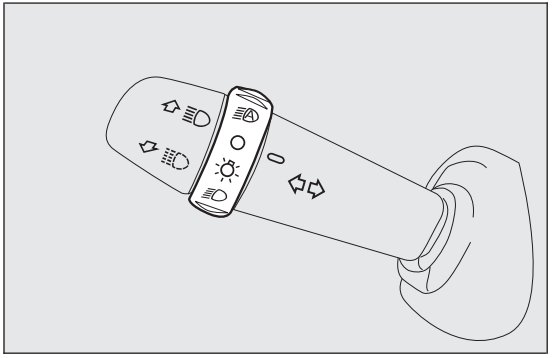

fig. 36 F0Q0652

WINDOW CLEANING

WINDSCREEN WASHER/WIPER

They can be operated only with the ignition key turned to MAR-ON.

The right stalk can be moved to five different positions fig. 37:

A windscreen wiper off.

B intermittent operation.

With the stalk in position B, turn ring nut F to select one of four different speeds for the intermittent operation mode:

= intermittent low speed

■ = slow intermittent operation.

■ ■ = medium intermittent operation.

■ ■ ■ = fast intermittent operation.

C continuous slow operation;

D continuous fast operation;

E temporary fast operation (unstable position).

Temporary fast operation position E is limited to the time that the stalk is manually held in this position. The stalk returns to position A when it is released, automatically stopping the windscreen wipers.

IMPORTANT With the windscreen wipers in use, if reverse gear is engaged, the rear window wiper is automatically activated.

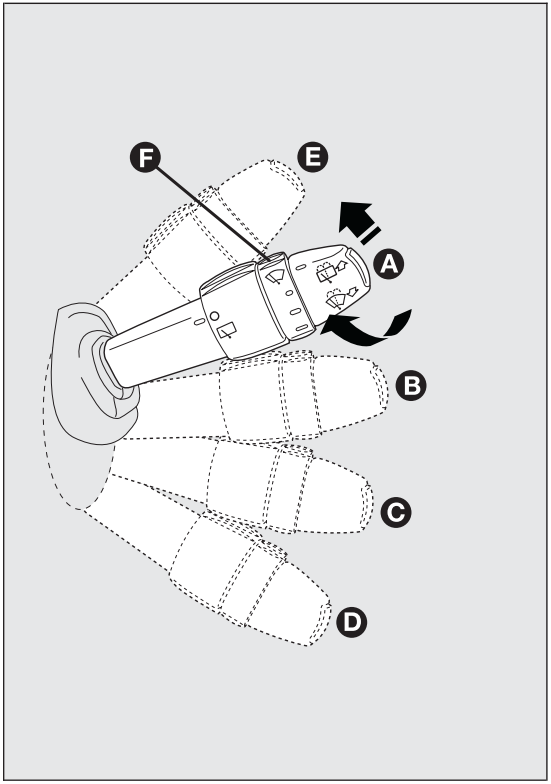

fig. 37 F0Q0645

Never use the windscreen wipers to remove layers of snow or ice from the windscreen. In such conditions, the windscreen wipers may be subjected to excessive stress and the motor protection, which prevents operation for a few seconds, may intervene. If operation is not restored, contact a Fiat Dealership.

"Smart washing" functionfig. 38

Pull the stalk towards the steering wheel (unstable position) to operate the windscreen washer.

Keep the stalk pulled, with just one movement, to operate the washer jet and the windscreen wiper; the latter automatically turns on if you keep the stalk pulled for more than half a second.

The windscreen wiper stops operating a few strokes after releasing the stalk; a further “cleaning stroke”, after a few seconds, completes the wiping operation.

RAIN SENSOR
(for versions/markets, where provided)

The rain sensor A fig. 39 is located behind the interior rear view mirror in contact with the windscreen and has the purpose of automatically adjusting the frequency of the windscreen wiper strokes depending on the intensity of the rain during intermittent operation.

The sensor has an adjustment range that varies progressively from wiper still (no stroke) when the windscreen is dry, to wiper at first continuous speed (slow continuous operation) with intense rain.

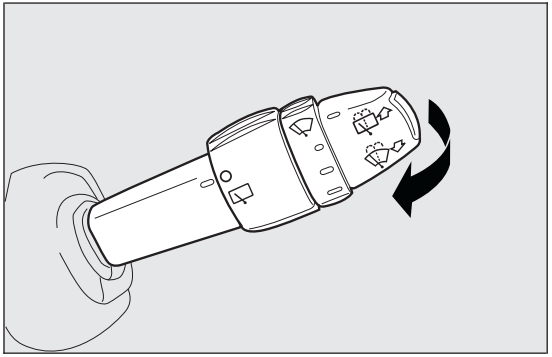

fig. 38 F0Q0646

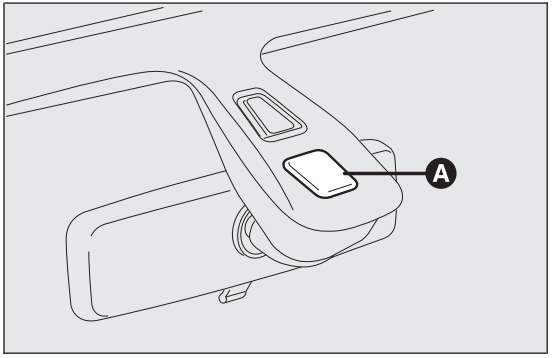

fig. 39 F0Q0014

Activation

Move the right stalk down by one click.

The activation of the sensor is signalled by a "stroke" to show that the command has been acquired.

IMPORTANT Keep the glass in the sensor area clean.

By turning ring nut F fig. 37 is it possible to increase the sensitivity of the rain sensor to obtain a more rapid variation between wiper still (no stroke) when the windscreen is dry, to wiper at first continuous speed (slow continuous operation).

The increasing of the rain sensor sensitivity is also signalled by a stroke of the wipers.

If the windscreen washer is used with the rain sensor activated, the normal washing cycle is performed, after which the rain sensor resumes its normal automatic operation.

Deactivation

Turn the ignition key to STOP.

At the next start-up (key at MAR-ON), the sensor will not be reactivated even if the stalk is at B fig. 37. To activate the sensor, move the stalk to position A or C and then back to position B.

Rain sensor activation will be indicated by at least one wiper “stroke” even if the windscreen is dry.

Do not activate the rain sensor when washing the car in an automatic car wash.

Make sure the device is switched off if there is ice on the windscreen.

WARNING

Make sure the device is switched off whenever the windscreen is being cleaned.

REAR WINDOW WASHER/WIPER

It can be operated only with the ignition key turned to MAR-ON. The function stops when the stalk is released.

Turning the stalk ring nut A fig. 40 from position O to position will operate the rear window wiper as follows:

- ❒ in intermittent mode when the rear window wiper is not operating;
- ❒ in synchronous mode (at half the speed of the windscreen wiper) when the windscreen wiper is operating;
- ❒ in continuous mode with reverse gear engaged and the control active.

With the windscreen wiper on and reverse gear engaged the rear window wiper is activated in continuous mode. Pushing the stalk towards the dashboard (unstable position) will activate the rear window washer jet.

Keep the stalk pushed for more than half a second to activate the rear window wiper as well. Releasing the stalk will activate the smart washing function, as described for the windscreen wiper.

HEADLIGHT WASHERS
(for versions/markets, where provided)

The headlight washers fig. 41 are retractable, i.e. they are located inside the front bumper and work when the windscreen washer is activated with the dipped and/or main beam headlights on.

IMPORTANT Check the correct operation and cleanliness of nozzles at regular intervals.

Do not use the rear window wiper to remove layers of snow or ice. In such conditions, the wiper may be subjected to excessive stress and the motor protection, which prevents operation for a few seconds, may intervene. If operation is not restored, contact a Fiat Dealership.

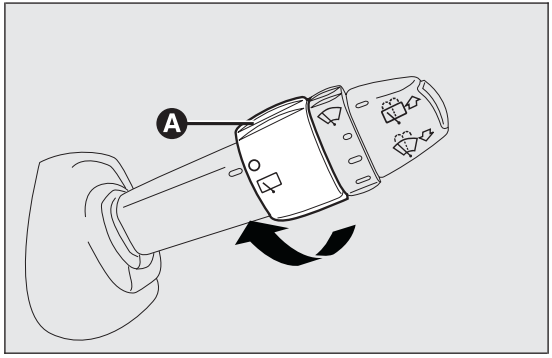

fig. 40 F0Q0653

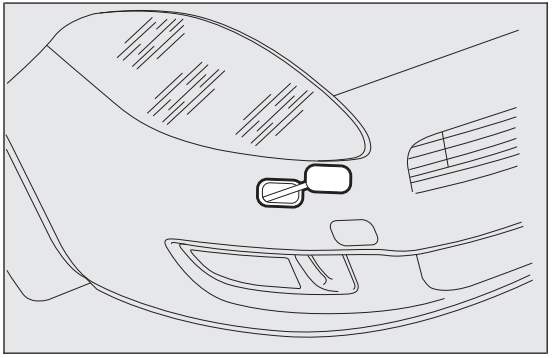

fig. 41 F0Q0018

CRUISE CONTROL
(constant speed regulator)
(for versions/markets, where provided)

This is an electronically controlled driving assistance device which allows the car to be driven at a chosen speed above 30 km/h on long stretches of dry, straight roads with few variations (e.g. motorways), without having to depress the accelerator pedal.

The use of this device on extra-urban roads with traffic is not therefore recommended. Do not use the device in town.

TURNING THE DEVICE ON

Turn the ring nut A fig. 42 to the ON position.

The device must only be switched on in 4th gear or higher. When travelling downhill with the device engaged, the vehicle speed may slightly exceed the preset one.

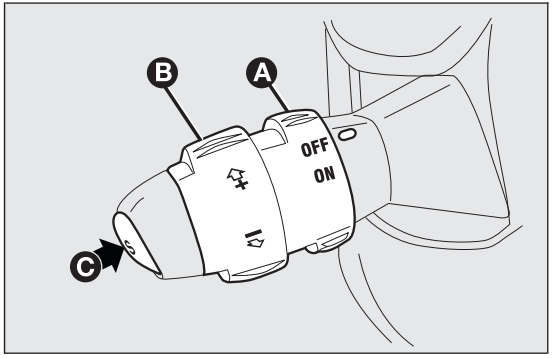

fig. 42 F0Q0648

The activation is indicated by the turning on of warning light on the instrument panel (together with the dedicated message on the display) (see "Warning lights and messages" chapter).

STORING THE VEHICLE SPEED

Proceed as follows:

❒ turn ring nut A fig. 42 to ON and press the accelerator pedal so that the car reaches the desired speed;

❒ turn the ring nut B to (+) for at least three seconds, then release it. The vehicle speed is now memorised and you can therefore release the accelerator pedal.

If needed (when overtaking for instance), you can accelerate simply by depressing the accelerator pedal; when you release the pedal, the vehicle goes back to the speed set previously.

RESTORING STORED SPEED

If the device has been switched off, for example by depressing the brake or clutch pedal, the memorised speed can be restored as follows:

❒ accelerate progressively until a speed close to that stored is reached;

❒ engage the gear selected at the time that the speed was memorised (4th, 5th or 6th gear);

❒ press button C fig. 42.

INCREASING THE STORED SPEED

This can be done in two ways:

❒ by pressing the accelerator and memorising the new speed reached;

or

❒ by temporarily turning ring nut B fig. 42 to (+).

Each movement of the ring nut will correspond to a slight increase in speed (about 1 km/h), while keeping the ring nut turned will correspond to a continuous speed increase.

REDUCING THE STORED SPEED

This can be done in two ways:

❒ by switching off the device and then memorising the new speed;

or

❒ by keeping ring nut B fig. 42 turned to (–) until the new speed is reached; it will then be memorised automatically.

Each movement of the ring nut will correspond to a slight reduction in speed (about 1 km/h), while keeping the ring nut turned will correspond to a continuous reduction in speed.

TURNING THE DEVICE OFF

Turn the ring nut A fig. 42 to OFF or turn the ignition key to STOP. The device is automatically turned off in one of the following cases:

❒ when the brake or clutch pedal is pressed;

❒ if the ASR or ESP system cuts in (for versions/ markets, where provided);

❒ if the gear is shifted in versions with Dualogic gearbox (for versions/markets, where provided) in Manual mode;

❒ if the Dualogic gearbox lever (where provided) is inadvertently shifted to N or R.

WARNING

Whilst driving with the device on, never place the gear lever in neutral and do not move the Dualogic gearbox lever into position N or R.

WARNING

If the device is faulty, turn ring nut A fig. 42 to OFF, check the condition of the protective fuse and contact a Fiat Dealership.

ROOF LIGHTS

FRONT ROOF LIGHT WITH SPOT LIGHTS

Switch A fig. 43 switches the roof lights on/off.

With the switch A in the central position, the lights C and D come on/go off when front doors are opened/closed.

With switch A pressed to the left, lights C and D are always off. With switch A pressed to the right, the lights C and D are always on.

Lights switch on/off progressively.

Switch B controls the spot light function; when the roof light is off, it switches on individually:

❒ light C if pressed on the left side;

❒ light D if pressed on the right side.

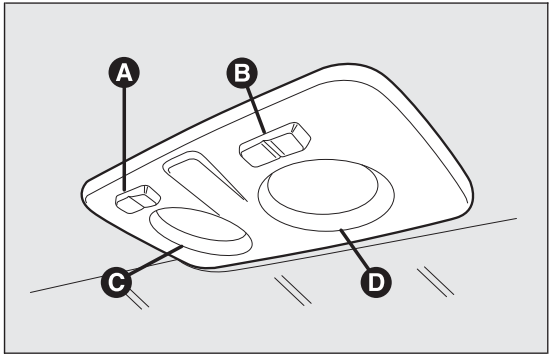

fig. 43 F0Q0669

IMPORTANT Before getting out of the car, make sure that both switches are in the central position: when the doors are closed the lights will switch off to avoid draining the battery. In any case, if the switch is left in on position, the roof light switches off automatically 15 minutes after the engine switching off.

Roof light timing

To make getting in and out the vehicle easier, especially at nighttime or in poorly lit areas, two timing logics are available.

Timing when getting into the car

The roof lights switch on according to the following modes:

❒ for around 10 seconds when the front doors are unlocked;

❒ for about 3 minutes when one of the side doors is opened;

❒ for about 10 seconds when the doors are closed.

The timing is interrupted when the ignition key is turned to MAR-ON.

Timing when getting out of the car

After removing the key from the ignition switch, the roof lights switch on as follows:

❒ within 2 minutes of the engine being switched off for a period of around 10 seconds;

❒ when one of the side doors is opened for a period of around 3 minutes;

❒ when one of the doors is closed for a period of about 10 seconds.

❒ if the fuel cut-off switch operates, they are on for about 15 minutes, then they switch off automatically.

Door locking switches the lights off immediately (unless the fuel cut-off switch is operating).

REAR ROOF LIGHT

Versions without sun rooffig. 44

In these versions, there are two rear roof lights.

Press the point indicated by the arrow to switch the lights on/off (+ sign on the roof light lens cover).

The rear roof lights also come on in conjunction with events that cause the front roof light to come on.

Versions with sun rooffig. 45

In these versions, there is only one rear roof light.

Press the point indicated by the arrow to switch the lights on/off (+ sign on the roof light lens cover).

The rear roof light also switches on in conjunction with events that cause the front roof light to switch on.

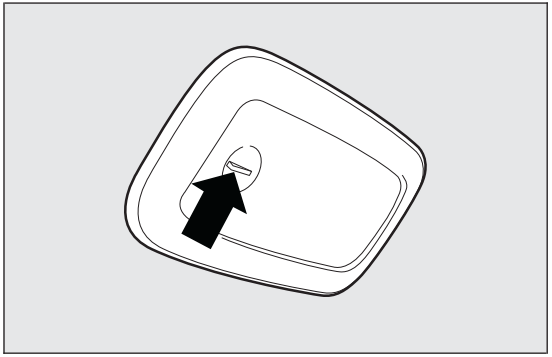

fig. 44 F0Q0670

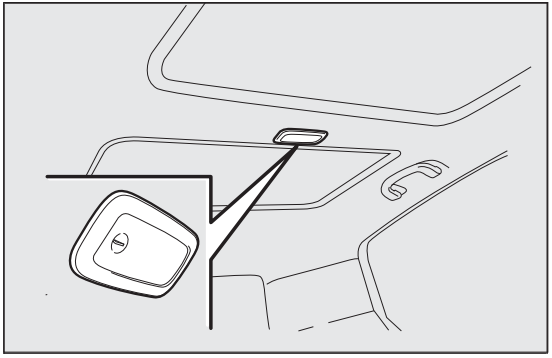

fig. 45 F0Q0740

CONTROLS

HAZARD WARNING LIGHTS

They are turned on by pressing switch A fig. 46, regardless of the position of the ignition key. With the device on, warning lights ⇦ and ⇨ light up in the instrument panel.

Press button A again to switch the lights off.

IMPORTANT The use of hazard warning lights is governed by the highway code of the country you are in. Comply with legal requirements.

Emergency braking

During emergency braking, the hazard warning lights come on automatically and warning lights ⇦ and ⇨ on the panel also come on.

The function switches off automatically when emergency braking ceases.

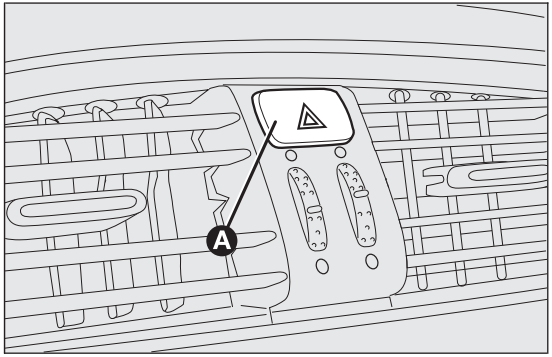

fig. 46 F0Q0637

FOG LIGHTS
(for versions/markets, where provided)

Press button B fig. 47 with the side lights on to turn the fog lights on.

Press the button again to turn the lights off.

REAR FOG LIGHT

Press button C with the dipped beam headlights or front fog lights on to switch it on fig. 47.

Press the button again to switch it off.

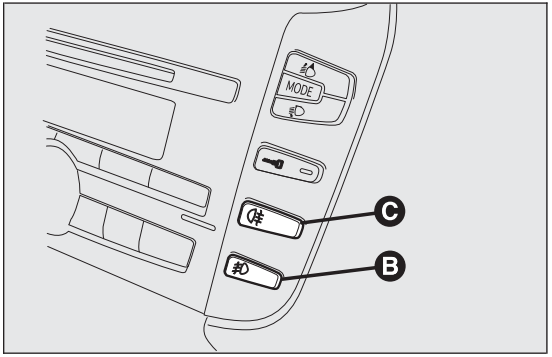

fig. 47 F0Q0636

FUEL CUT-OFF SWITCH

(as an alternative to the fuel cut-off system, for versions/markets where provided)

It is located in the bottom, near the passenger side pillar fig. 48. It is triggered in the event of an impact, causing:

- ❒ the fuel supply cut-off with the engine consequently switching off;
- ❒ the automatic unlocking of the doors;
- ❒ the interior lights being switched on (for about 15 minutes).

The intervention of the switch is indicated by the switching on of the ⚠ warning light on the instrument panel or the symbol on the display (together with a message) (see "Warning lights and messages" section).

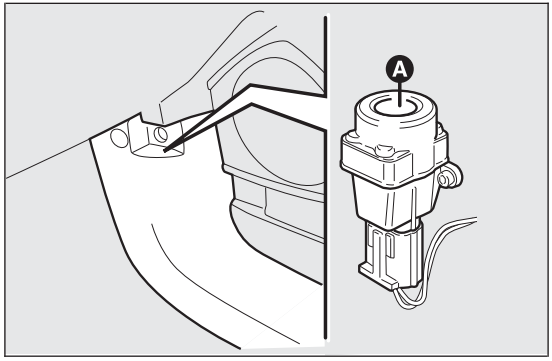

fig. 48 F0Q0638

Carefully check the car for fuel leaks, for instance in the engine compartment, under the car or near the tank area.

If no fuel leaks are found and the car can be started again, press button A to reactivate the fuel system and the lights.

After a collision, turn the ignition key to STOP to prevent the battery from running down.

WARNING

If, after a collision, you smell fuel or notice leaks from the fuel supply system, do not reset the switch to avoid fire risk.

FUEL CUT-OFF SYSTEM

(as an alternative to the fuel cut-off switch, for versions/markets where provided)

It is triggered in the event of a collision, causing:

❒ the fuel supply cut-off with the engine consequently switching off;

❒ the automatic unlocking of the doors;

❒ the interior lights being switched on.

The intervention of the system is indicated by a message shown on the display.

Carefully check the car for fuel leaks, for instance in the engine compartment, under the car or near the tank area.

After a collision, turn the ignition key to STOP to prevent the battery from running down.

The following procedure should be carried out to restore the correct operation of the vehicle:

❒ turn the ignition key to the MAR-ON position;

❒ turn on the right direction indicator;

❒ turn off the right direction indicator;

❒ turn on the left direction indicator;

❒ turn off the left direction indicator;

❒ turn on the right direction indicator;

❒ turn off the right direction indicator;

❒ turn on the left direction indicator;

❒ turn off the left direction indicator;

❒ turn the ignition key to the OFF position;

❒ turn the ignition key to the MAR-ON position.

WARNING

If, after an impact, you smell fuel or notice leaks from the fuel supply system, do not reactivate the system to avoid the risk of fire.

INTERIOR FITTINGS

FRONT ARMREST WITH STORAGE COMPARTMENTS

(for versions/markets, where provided)

This is located between the front seats. A storage compartment and cooled drinks compartment are located inside the armrest (for versions/markets, where provided) (see following paragraphs).

The armrest can be adjusted lengthwise through the cover A fig. 49.

Storage compartment

Cover A fig. 49 can only be opened with the armrest fully lowered and attached.

To access storage compartment B fig. 50, lift up cover A.

Do not spill your drinks: in any case, a hole at the bottom of the compartment allows, if necessary, for spilled liquids to drain outside the car.

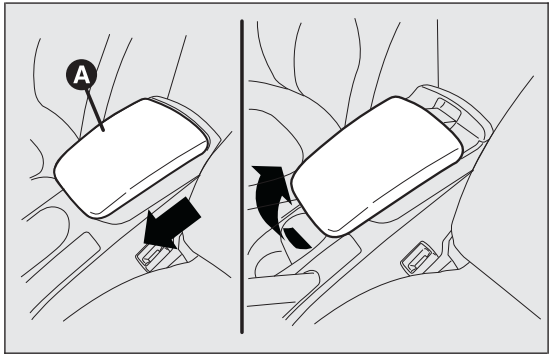

fig. 49 F0Q0631

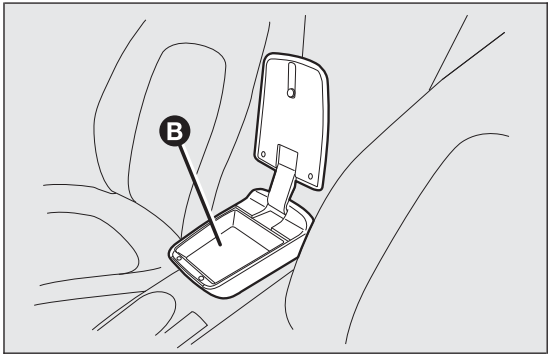

fig. 50 F0Q0632

Cooled drinks compartment

Press button A fig. 51 and lift up armrest B: you can then access the cooled drinks compartment fig. 52.

IMPORTANT The function of the compartment is to maintain the temperature of the drinks that are put in, which should be heated or cooled beforehand.

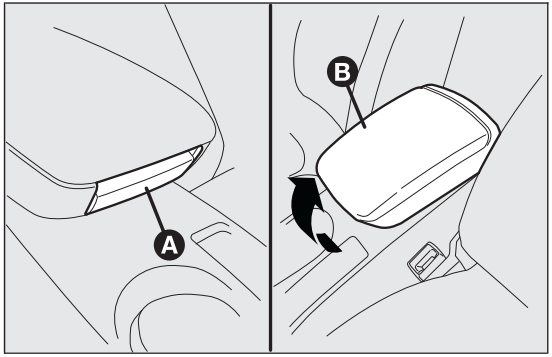

fig. 51 F0Q0634

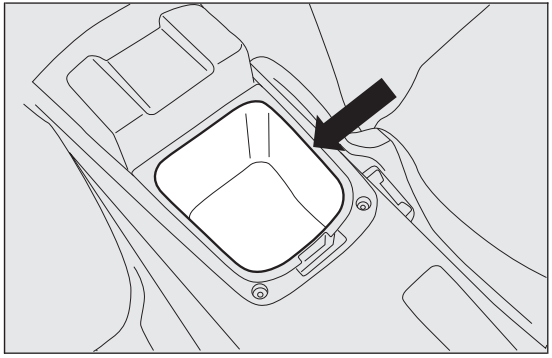

fig. 52 F0Q0633

REAR ARMREST

(for versions/markets, where provided)

To use armrest A fig. 53, lower it as shown in the diagram.

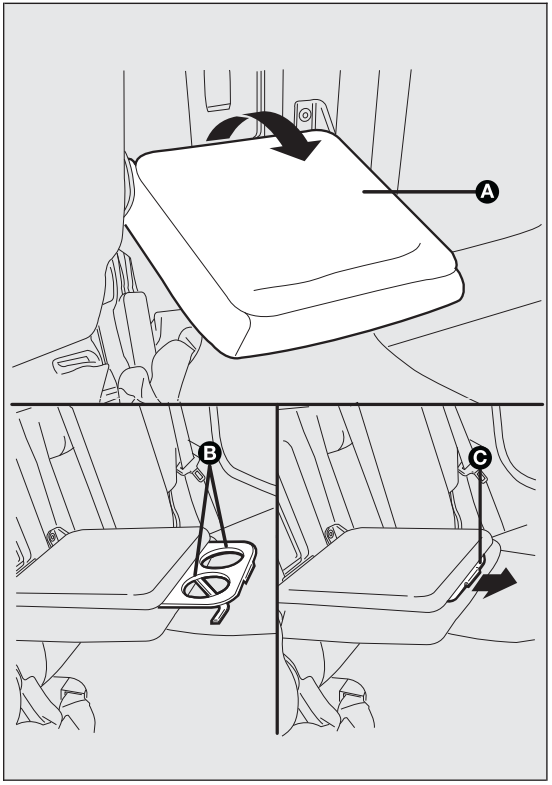

fig. 53 F0Q0010

There are two cup and/or can holders B in the armrest. To use these, pull tab C in the direction shown by the arrow.

A storage compartment is available inside the armrest; this can be accessed by raising the flap.

STORAGE COMPARTMENTS

Passenger side compartment

To open this compartment, operate handle A fig. 54, as shown by the arrow.

When the compartment is opened a courtesy light comes on inside which remains on for about 15 minutes with the ignition key in the STOP position.

If, during this period, a door or the tailgate is opened, the 15 minute timing is reset.

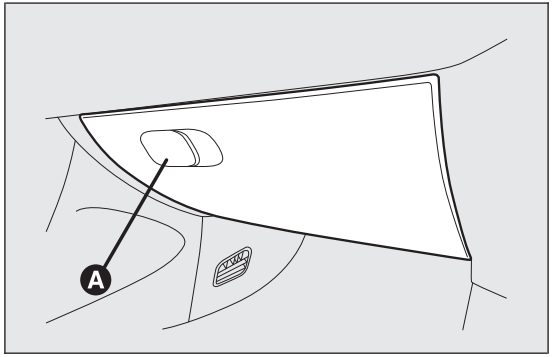

fig. 54 F0Q0635

WARNING

Never travel with the glove compartment open: it could injure the passenger in the event of a crash.

Compartment under the seat

(for versions/markets, where provided)

On some versions, under the passenger's seat there is a storage compartment: do not use it for objects heavier than 1.5 kg.

To open the compartment, use handle A fig. 55.

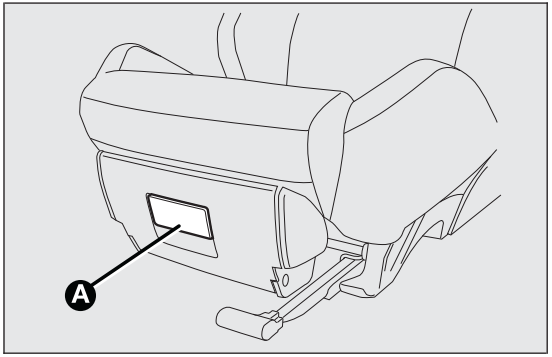

fig. 55 F0Q0012

POWER SOCKET (12V)

It is located on the central tunnel and is only operational when the ignition key is turned to MAR-ON. If a smokers' kit is requested, the socket is replaced by a cigar lighter (see next paragraph).

On some versions an additional power socket A fig. 56 is provided in the luggage compartment.

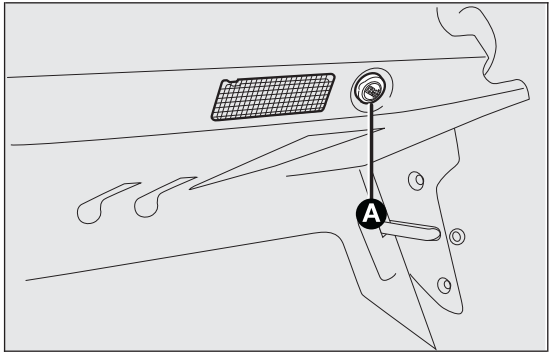

fig. 56 F0Q0016

CIGAR LIGHTER

(for versions/markets, where provided)

This is located on the central tunnel.

Press button A fig. 57 to switch on the cigar lighter when the ignition key is turned to MAR-ON.

After a few seconds the button automatically returns to its initial position, and the cigar lighter is ready for use.

IMPORTANT Always check that the cigar lighter is switched off.

IMPORTANT The cigar lighter becomes very hot. Handle it carefully and make sure that children don't touch it: risk of fire and/or burning.

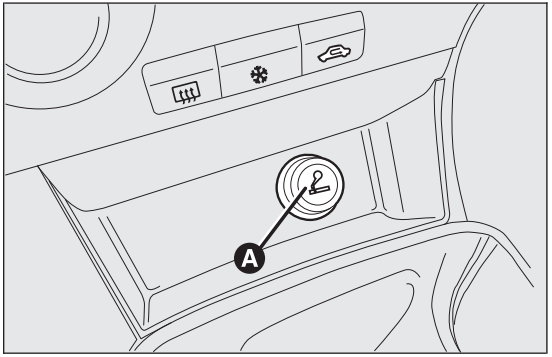

fig. 57 F0Q0629

ASHTRAY

(for versions/markets, where provided)

The ashtray is a removable spring-loaded plastic box fig. 58 that can be fitted into the cup/can holders on the central tunnel.

IMPORTANT Do not use the ashtray as a waste paper basket: it may catch fire in contact with cigarette stubs.

GLASS HOLDER

The central tunnel has two cup and/or can holders fig. 59.

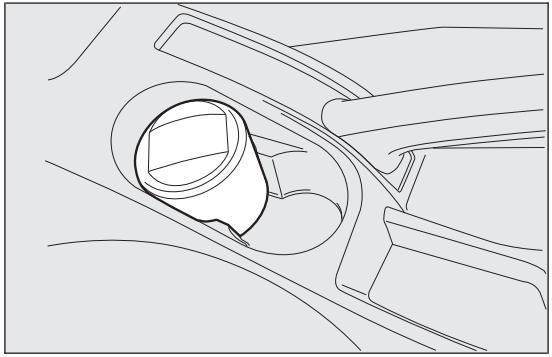

fig. 58 F0Q0630

STORAGE COMPARTMENTS

These are located next to the cigar lighter fig. 60, near the handbrake lever fig. 61, on the front and rear doors fig. 62 and fig. 63.

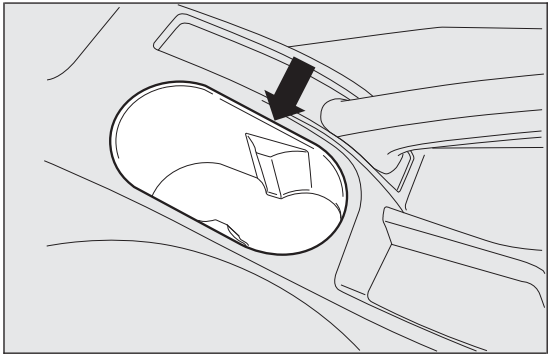

fig. 59 F0Q0671

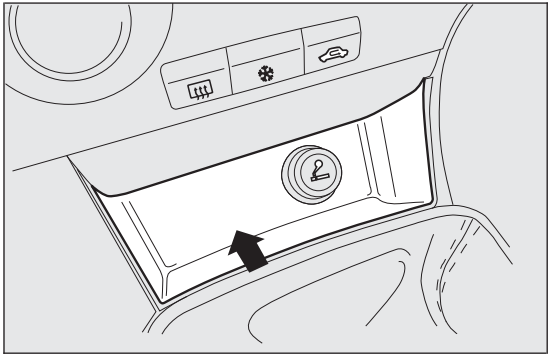

fig. 60 F0Q0672

SUN VISORS

Driver's side

A courtesy mirror may be fitted to the sun visor on some versions.

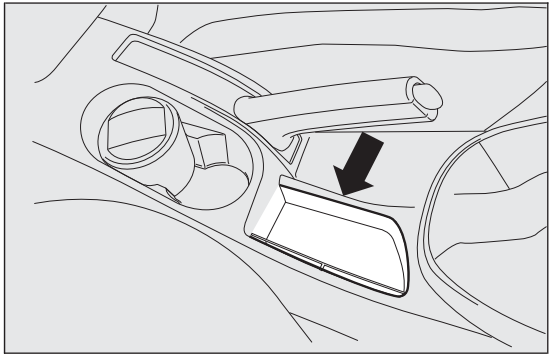

fig. 61 F0Q0673

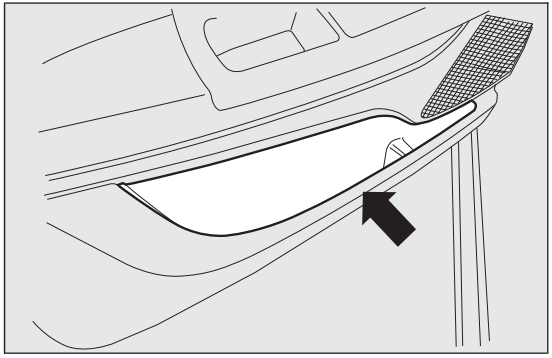

fig. 62 F0Q0674

Passenger side

A courtesy mirror is fitted to the sun visor (on some versions, the mirror is lit by a courtesy light).

The driver and passenger sun visors can be moved back and forth and to the side fig. 64.

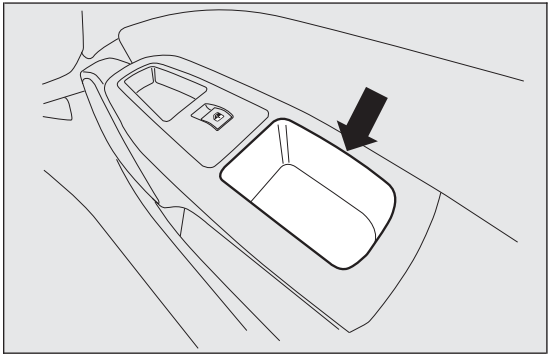

fig. 63 F0Q0676

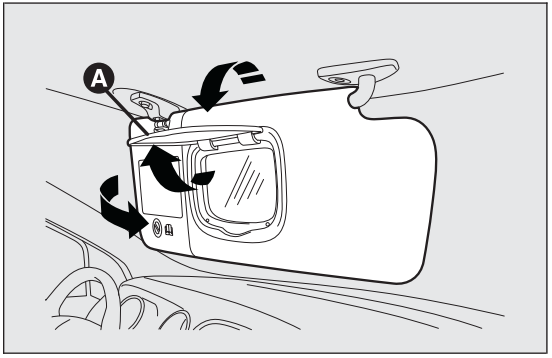

fig. 64 F0Q0675

On some versions, a courtesy mirror with courtesy light is fitted on the back of the visors. The light allows the mirror to be used even in poor visibility conditions.

Lift cover A to access the mirror.

If the ignition key is at STOP position, the light stays on for about 15 minutes. If, during this period, a door or the tailgate is opened, the 15 minute timing is reset.

IMPORTANT On both sides of the sun visor there is a label remembering that it is compulsory to deactivate the airbags if a rearward facing child restraint system is fitted. Always comply with the instructions on the sun visor. (see the "Front airbags" paragraph in chapter "Safety").

SUN ROOF

(for versions/markets, where provided)

The large electric sun roof comprises two panes of glass, one of which is mobile and the other fixed. These are equipped with two

sun blinds (front and rear) that can be moved manually.

The sun blinds be used in "fully closed" or "fully open" positions (they have no fixed intermediate positions).

To open the sun blinds: grip handle A fig. 65, release it and move it in the direction of the arrows to the "fully open" position.

To close them, carry out the procedure in reverse. The sun roof can be operated only with the ignition key turned to MAR-ON. The controls A and B fig. 66 on the trim next to the front roof light operate the sun roof opening/closing functions.

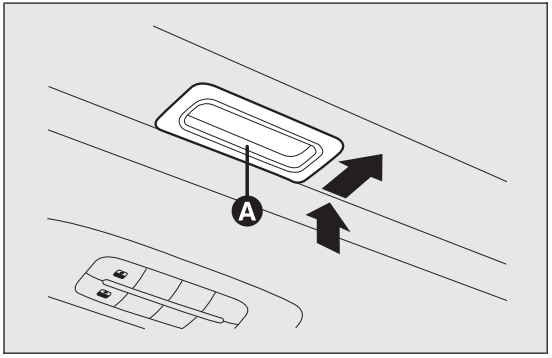

fig. 65 F0Q0737

Opening

Press and hold down button B fig. 66. The front glass panel will move into the spoiler position; press button B once again and hold down for more than half a second to automatically move the sun roof to an intermediate position ("Comfort" position).

If the opening control is pressed again for more than half a second, the roof will automatically continue until it reaches the end of travel position; the roof glass can be stopped in an intermediate position by operating the button again.

Closing

With the roof in the fully open position, press button A fig. 66 and, if the button is operated for more than half a second, the front roof glass with automatically assume the intermediate position ("Comfort" position).

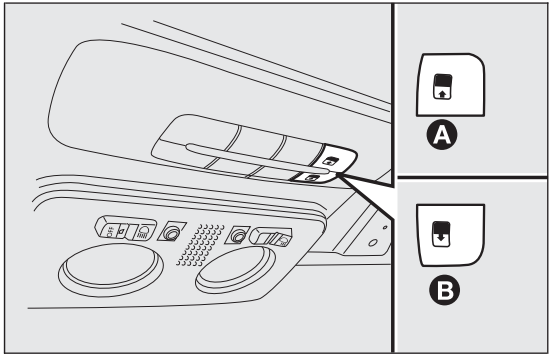

fig. 66 F0Q0678

If the button is operated again for about half a second the roof will assume the spoiler position. Lastly, if the closing button is pressed again, the roof will assume the fully closed position.

Use the sun roof only at "spoiler" position if a transverse roof rack is fitted.

Do not open the sun roof if there is snow or ice on it: you may damage it.

WARNING

When leaving the vehicle, always remove the key from the ignition switch to avoid the risk of injury to those still inside the car due to accidental operation of the sun roof. Improper use of the roof can be dangerous. Before and during operation, always check that no one is exposed to the risk of being injured by the moving sun roof or by objects getting caught or hit by it.

ANTI-PINCH SAFETY DEVICE

The sun roof has an anti-pinch safety system capable of detecting the presence of an obstacle whilst the roof is closing: if this happens, the system intervenes and the movement of the glass is immediately reversed.

INITIALISATION PROCEDURE

After the battery has been disconnected or a fuse has blown, the operation of the sun roof must be initialised again.

Proceed as follows:

❒ press button A fig. 66 until the roof is completely closed. Release the button;

❒ press button A and keep it pressed for at least 10 seconds and/or until the glass panel clicks forwards. Release the button at this point;

❒ press button A within 5 seconds of this operation and keep it pressed: the glass panel will complete a full opening and closing cycle. Only release the button at the end of this cycle.

EMERGENCY MANOEUVRE

If the switch does not work, the sun roof can be operated manually as follows:

❒ remove the protective cap A fig. 67 located on the rear of the inner trim;

❒ take the Allen key supplied located in the container housing the documentation or in the luggage compartment (versions with automatic Fix&Go);

❒ introduce the Allen key into housing B and turn:
- clockwise to open the roof;
- anti-clockwise to close the roof.

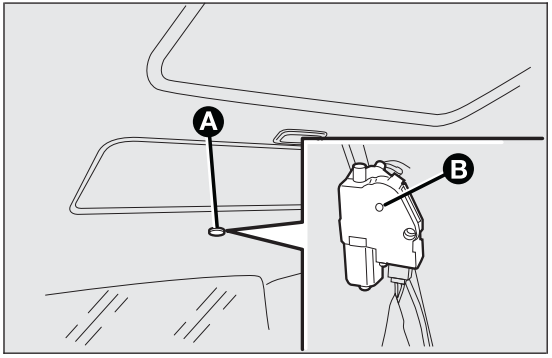

fig. 67 F0Q0738

DOORS

CENTRAL LOCKING

From outside

With the doors closed, insert and turn the key in one of the front door locks.

From inside

Press the door lock/release button fig. 68 located in the dashboard, from inside the car (with the doors shut).

If the electrical system has failed, it is still possible to lock the doors manually.

IMPORTANT The rear doors cannot be opened from the inside when the child lock device is engaged.

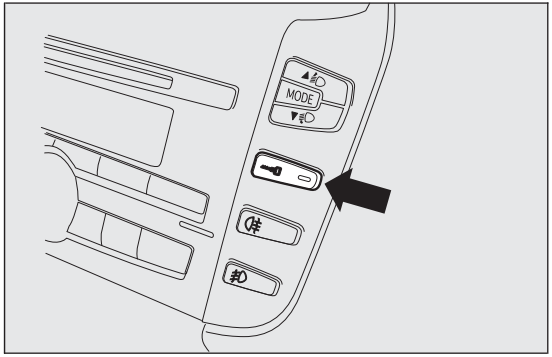

fig. 68 F0Q0641

CHILD LOCK DEVICE

This prevents the rear doors from being opened from the inside.

Device fig. 69 can only be engaged with the doors open:

❒ position 1 - device engaged (door locked);

❒ position 2 - device not engaged (door may be opened from the inside).

The device remains on even if the doors are unlocked electrically.

Always use this device when carrying children.

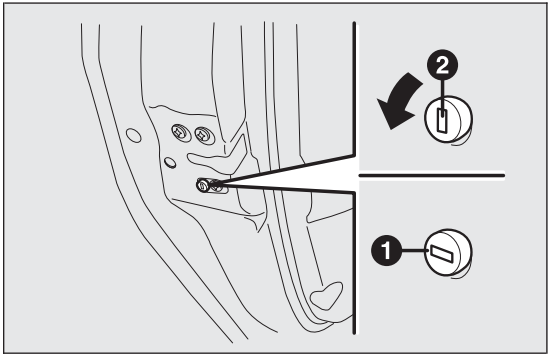

fig. 69 F0Q0677

WARNING

After engaging the child lock on both rear doors, check for proper engagement by trying to open a rear door with the internal handle.

REAR DOOR EMERGENCY LOCKING DEVICE

The rear doors are fitted with an emergency device that allows the doors to be locked when there is no current.

Proceed as follows:

❒ insert the metal insert of the ignition key into housing A fig. 70;

❒ turn the key clockwise and then remove it from housing A.

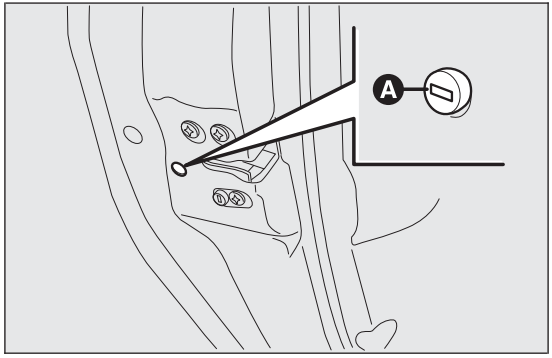

fig. 70 F0Q0679

The door lock knob can be realigned (only when the battery charge has been restored) as follows:

❒ press the button on the key;

❒ press the button on the dashboard to lock/unlock the doors;

❒ open a front door by inserting the key into the door catch;

❒ operate the internal door handle.

IMPORTANT If the child lock device was engaged and the previously described locking procedure carried out, operating the internal handle will not open the door but will only realign the door lock knobs. To open the door, the outside handle must be used. The door central locking/unlocking button is not disabled by the engagement of the emergency lock.

IMPORTANT If the battery is disconnected or the protection fuse blows, the door opening/closing mechanism must be initialised as follows:

❒ close all the doors;

❒ press button on the key or button for locking/unlocking the doors on the dashboard;

❒ press button on the key or button for locking/unlocking the doors on the dashboard.

WARNING

Do not activate the child lock device if the rear doors emergency lock device is already activated. If both have been activated, you need to use the interior handle to disengage the rear doors emergency locking system and then open the door from the outside.

ELECTRIC WINDOWS

They are fitted with a security system that can detect the presence of an obstacle whilst the window is closing; when this happens, the system kicks in and the movement of the glass is immediately reversed.

IMPORTANT In the event that the anti-crushing function is activated 5 times in only 1 minute, the system will automatically enter the "recovery" mode (self-protection). This condition is apparent from the window closing in stages.

If this occurs, restore the system as follows:

❒ open the windows;

or

❒ turn the ignition key to the STOP position and then to MAR-ON.

If no malfunction is present, the window returns to its normal operation automatically.

IMPORTANT With the ignition key at STOP or removed, the electric windows remain activated for about two minutes and are deactivated as soon as a door is opened.

WARNING

The system conforms to the 2000/4/EC standard concerning the safety of passengers leaning out of the passenger compartment.

IMPORTANT On some versions, when the button on the key with remote control is pressed for longer than 2 seconds the windows will open, whilst if the button is pressed for longer than 2 seconds the windows will close.

CONTROLS

Driver side front door fig. 71

Buttons have been provided on the driver's door panel to control the following functions with the ignition key turned to MAR-ON:

A opening/closing front left window; “continuous automatic” operation during window opening/closing stage;

B opening/closing front right window; “continuous automatic” operation during window opening/closing stage;

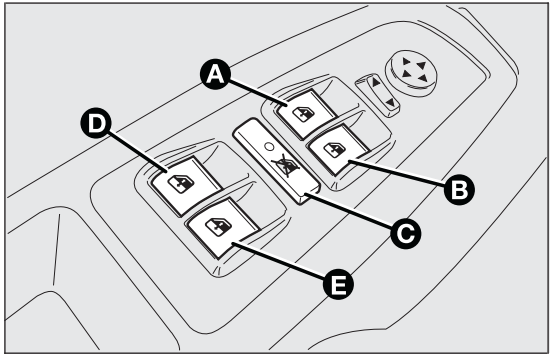

fig. 71 F0Q0622

C enabling/disabling of rear door electric window controls;

D opening/closing rear left window (for versions/markets, where provided); “continuous automatic” operation during window opening/closing stage;

E opening/closing rear right window (for versions/markets, where provided); “continuous automatic” operation during window opening/closing stage.

Window opening

Push the buttons to open/close the desired window.

When one of the two buttons is pressed briefly, the window moves in "stages"; if the button is held down, "continuous automatic" operation is activated.

If the button is pressed again the window will stop in its current position.

Window closing

Lift the buttons to close the desired window.

The window closing stage occurs following the same logics described for the opening stage.

WARNING

Improper use of the electric windows can be dangerous. Before and during their operation ensure that any passengers are not at risk from the moving glass either by personal objects getting caught in the mechanism or by being hit by it directly. When leaving the car, always remove the ignition key to prevent the electric windows from being inadvertently activated, as this could present a danger for the passengers remaining in the vehicle.

Passenger side front door/rear doors

On the passenger side front door panel, and on some versions also on the rear doors, buttons A fig. 72 are provided to control the associated windows.

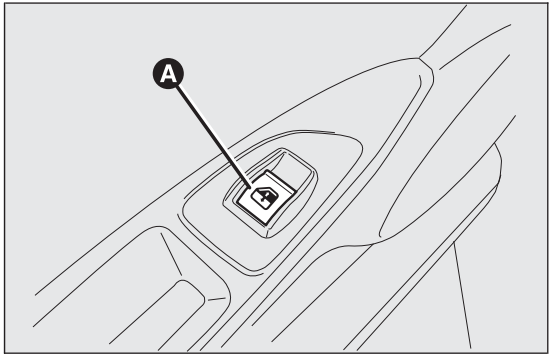

fig. 72 F0Q0743

ELECTRIC WINDOWS SYSTEM INITIALISATION

The system must be re-initialised after disconnecting the battery or if the relevant protection fuse is blown.

Proceed as follows to start the electric window initialisation:

❒ fully close the window to be initialised manually;

❒ after the window has reached the upper end of travel, hold the up button pressed for at least one second.

MANUAL REAR WINDOW MECHANISM
(for versions/markets, where provided)

To open and to close the window, use the relevant handle.

LUGGAGE COMPARTMENT

OPENING

When unlocked, the luggage compartment can be opened from the outside the car by pressing the electric logo fig. 73.

The tailgate can be opened at any time, if the doors are unlocked.

The key with remote control should be used to open the tailgate.

If the tailgate is not closed properly, the warning light or the symbol switch on in the instrument panel (together with the dedicated message on the display) (see "Warning lights and messages" chapter).

Opening the tailgate will switch the luggage compartment light on: the light will go off automatically when closing the tailgate.

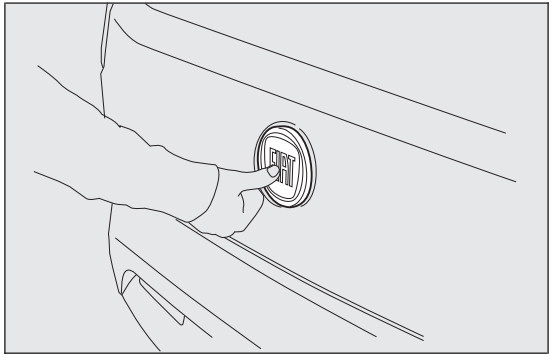

fig. 73 F0Q0680

The light will stay on for about 15 minutes after turning the key to STOP: if during this time, a door or the tailgate is opened, the light will switch on again for 15 minutes.

Opening the tailgate using the key with remote control

Press button even with alarm (for versions/ markets where provided) on.

Luggage compartment opening is indicated by the double flashing of the direction indicators; tailgate closing is indicated by single flashing (only with the alarm switched on).

If the tailgate is opened when the alarm is on, the system will:

❒ switch off the volume sensing protection;

❒ switch off the anti-lift protection;

❒ switch off the tailgate control sensor.

When the tailgate is closed again, all the functions are restored.

CLOSING

Lower the tailgate, pressing near the lock until you hear it click into place.

Do not fit additional objects onto the rear parcel shelf or tailgate (speakers, spoilers, etc.), except when contemplated by the manufacturer, to ensure the correct operation of the side gas shock absorbers of the tailgate itself.

WARNING

Never exceed the maximum allowed load in the luggage compartment (see the "Technical data" chapter). Also make sure that the objects you placed in the luggage compartment have been properly secured, to avoid them from being projected forward following sudden braking, causing injury to passengers.

WARNING

When travelling, do not put any object on the rear parcel shelf because they can injure passengers in the event of an accident or sudden braking.

EXTENDING THE LUGGAGE COMPARTMENT

The luggage compartment can be partially (1/3 or 2/3) or totally extended by splitting the rear seat.

Partial extension (1/3 or 2/3) Fig. fig. 74-fig. 75

Extending the luggage compartment on the right side makes it possible to carry two passengers on the left part of the rear seat. Extending the left side of the luggage compartment allows you to carry one passenger on the right part of the rear seat.

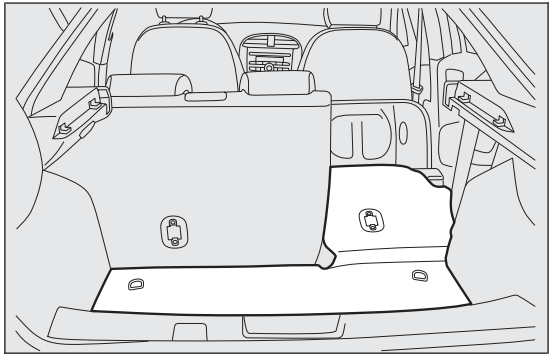

fig. 74 F0Q0681

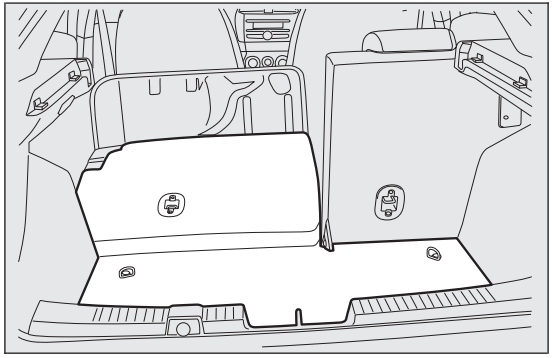

fig. 75 F0Q0682

Proceed as follows:

❒ completely lower the rear seat head restraints;

❒ move the seat belt to the side, making sure that it is fully extended and not twisted;

❒ fold the desired cushion forwards fig. 76 working in the point shown by the arrow;

❒ lift lever A fig. 77 retaining the backrest and fold the latter forwards. When you lift the lever, you will see a red band B.

Full extension

Tilting the rear seat completely forwards allows maximum loading volume.

Proceed as follows:

❒ completely lower the rear seat head restraints;

❒ move the seat belts to the side, making sure that they are correctly extended and not twisted;

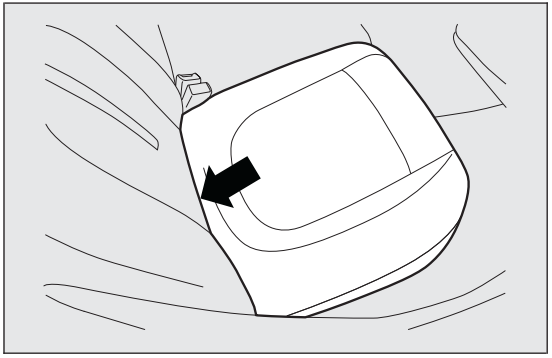

fig. 76 F0Q0684

❒ fold the cushions forwards as described above;

❒ remove the rear parcel shelf fig. 78 and release the upper ends of links A fig. 79 by removing the eyelets from the pins and pushing them in the direction indicated by the arrow;

❒ when the cushion is folded down, tilt the rear seat backrests completely forwards as described above so as to obtain a continuous loading surface.

REPOSITIONING THE REAR SEAT

Move the seat belts to the side, making sure that they are correctly extended and not twisted.

Lift the backrests and push them back until you hear both fastening mechanisms click in. Check that the red band B fig. 80 on the side of levers A is no longer visible.

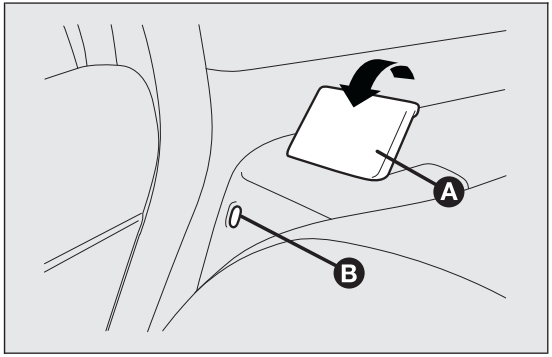

fig. 77 F0Q0683

The red band B indicates that the backrest is not secured. Return the cushions to the horizontal position holding the central seat fastening tongue raised.

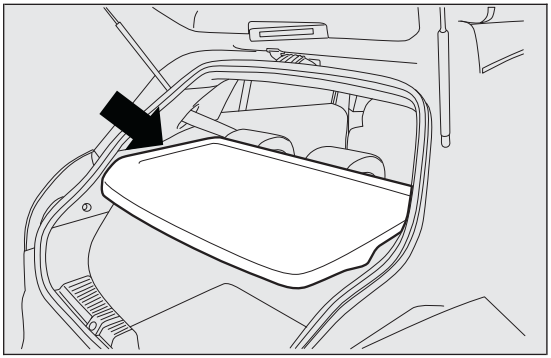

fig. 78 F0Q0686

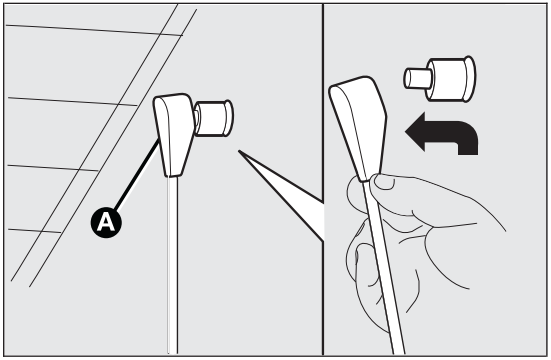

fig. 79 F0Q0687

WARNING

Make sure that the backrest is correctly secured on both sides (red bands B fig. 80 not visible) to prevent it from moving forward in the event of sharp braking, causing injuries to passengers.

SECURING YOUR LOAD

The luggage compartment contains two attachments fig. 81 for the cables that secure the load transported and another two attachments are located on the rear crossmember fig. 82.

IMPORTANT Every attachment has a maximum load capacity of 100 kg.

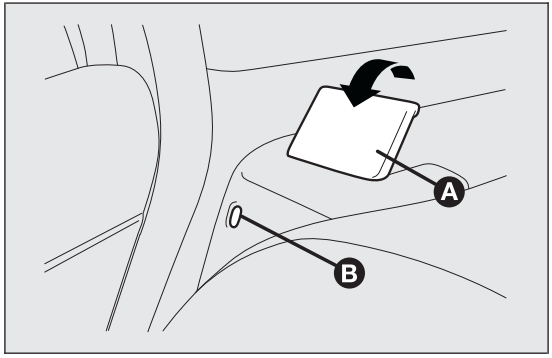

fig. 80 F0Q0683

WARNING

A heavy load that has not been secured may cause serious injuries to passengers in the event of an accident.

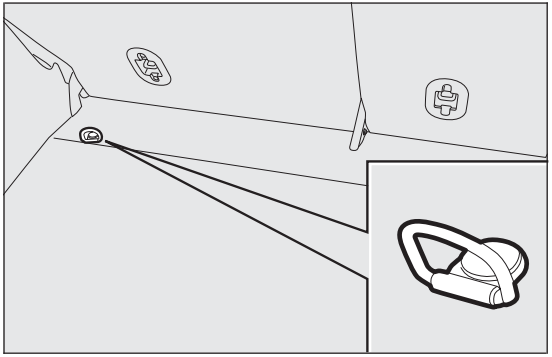

fig. 81 F0Q0685

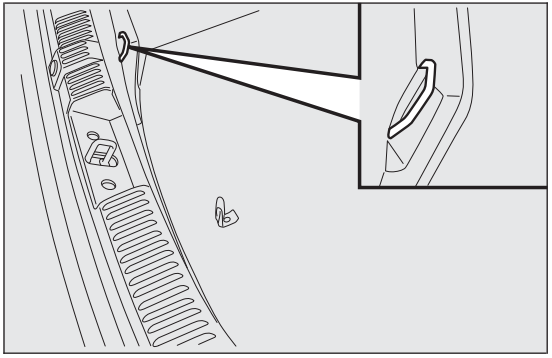

fig. 82 F0Q0688

WARNING

If you are travelling in an area with limited opportunities for vehicle refuelling and you wish to bring fuel with you in a petrol can, you must do so in compliance with current regulations and using an approved can, appropriately secured to the load securing attachments. Anyway, by doing so, you increase the risk of fire in case of an accident with your vehicle.

CARGO BOX

It consists of a preformed box fig. 83, which is located in the luggage compartment and can be used to store objects, making it possible to have a flat loading surface.

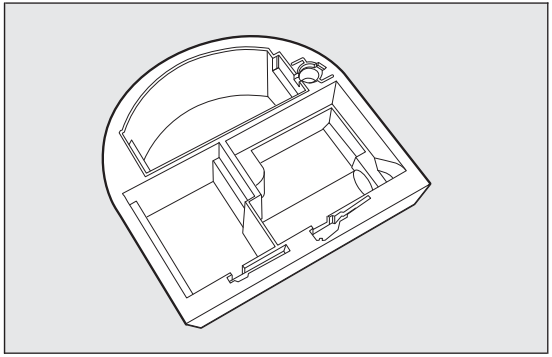

fig. 83 F0Q0002

BONNET

OPENING

Proceed as follows:

❒ pull lever A fig. 84 in the direction indicated by the arrow;

❒ pull lever B fig. 85 and lift the bonnet.

❒ lift the bonnet and, at the same time, release the bonnet stay C fig. 86 from its locking device, then insert the end of the stay into the housing D.

WARNING

The bonnet may drop suddenly if the supporting rod is not positioned correctly.

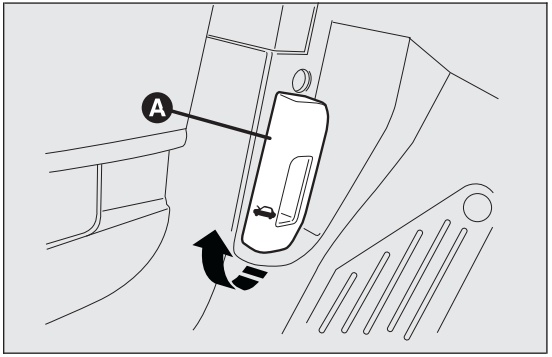

fig. 84 F0Q0689

Use both hands to lift the bonnet. Before lifting, check that the windscreen wiper arms are not raised from the windscreen, that the car is stationary and that the handbrake is engaged.

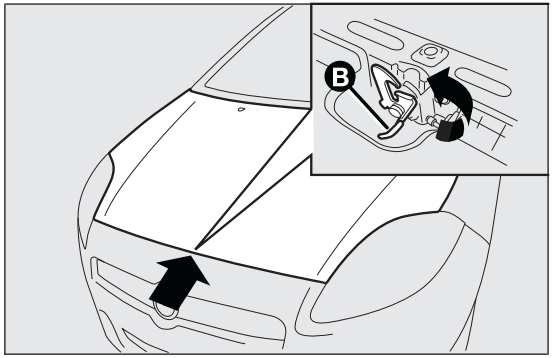

fig. 85 F0Q0690

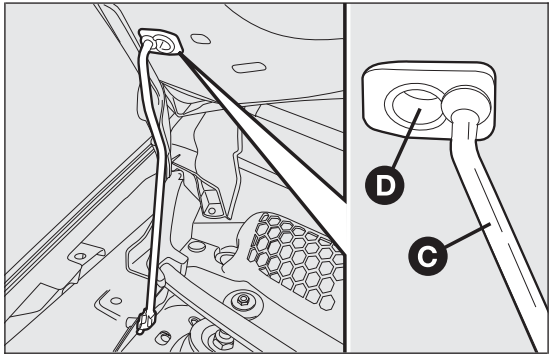

fig. 86 F0Q0748

CLOSING

Proceed as follows:

❒ hold the bonnet up with one hand and with the other remove the stay C fig. 86 from the housing D and fit it back in its locking device;

❒ lower the bonnet to approximately 20 centimetres from the engine compartment and let it drop. Make sure that the bonnet is completely closed and not only fastened by the safety catch by trying to open it. If it is not perfectly closed, do not try to press the bonnet lid down but open it and repeat the procedure.

If the bonnet is not closed properly, the warning light or the symbol switch on in the instrument panel (together with the dedicated message on the display) (see “Warning lights and messages” chapter).

IMPORTANT Always check that the bonnet is closed correctly to avoid it opening while the car is travelling.

WARNING

Perform these operations only when the car is stationary.

ROOF RACK/SKI RACK

The attachments provided are located in the areas illustrated in fig. 87 and are only accessible with the doors open. Lineaccessori Fiat has a dedicated roof rack/ski rack for this car.

WARNING

After travelling for a few kilometres, check to ensure that the fixing screws for the attachments are well tightened.

WARNING

Never exceed the maximum permitted loads (see chapter "Technical specifications").

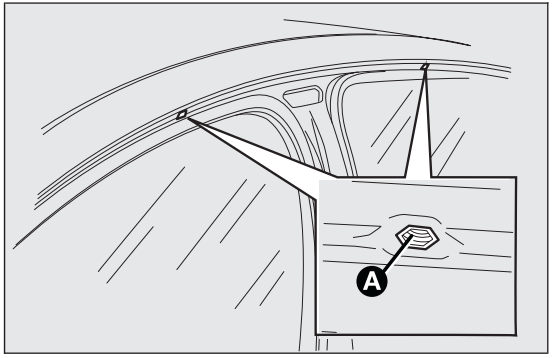

fig. 87 F0Q0785

WARNING

Evenly distribute the load and take into account, when driving, the increased responsiveness of the car to side wind.

Fully comply with the regulations in force concerning maximum clearance.

HEADLIGHTS

LIGHT BEAM DIRECTION

The correct aiming of the headlights is important for the comfort and safety of not only the driver but all other road users. This is also covered by a specific rule of the highway code.

The headlights must be correctly aligned to guarantee the best visibility conditions for all drivers while travelling with headlights on.

Contact a Fiat Dealership to have the lights checked and adjusted, if necessary.

IMPORTANT When the gas discharge (Xenon) headlamps (for versions/markets, where provided) are switched on, normally parabolas and light beam move vertically for about 2 seconds until headlamp alignment has stabilised.

HEADLIGHT ALIGNMENT CORRECTOR

This device works with the ignition key in the MAR-ON position and the dipped beam headlights on.

The car will tilt backwards when it is loaded, raising the light beam. The beams must therefore be realigned in this case.

Adjusting headlights alignment

For adjusting, press buttons ▲ and ▼ fig. 88 on the dashboard.

Press button ▲ to increase the light beam of one position.

Press button ▼ to decrease the light beam of one position.

The display shows the position while adjusting.

Correct positions depending on the load

Position 0 one or two occupants in the front seats.

Position 1 five people

Position 2 five people with a load in the luggage compartment

Position 3 driver + maximum permitted load stowed in the luggage compartment.

IMPORTANT Check the headlight alignment each time the weight of the load transported changes.

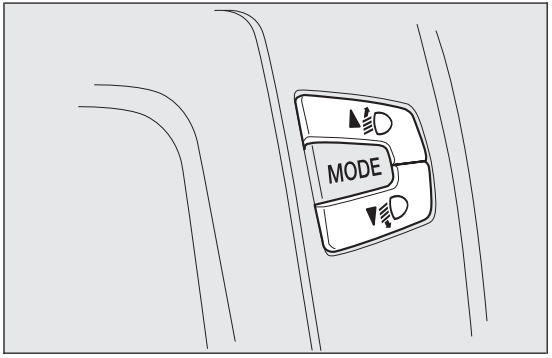

fig. 88 F0Q0644

IMPORTANT If the car is equipped with (Xenon) gas discharge headlights, the headlight alignment is controlled electronically, as a consequence the ▲ and ▼ buttons are not present.

FOG LIGHT ALIGNMENT

Contact a Fiat Dealership to have the lights checked and adjusted, if necessary.

ADJUSTING THE HEADLIGHTS WHEN ABROAD

The dipped beam headlights are aligned for operation in the country where the vehicle was originally purchased. When in countries where you drive on the other side of the road, you need to alter the beam direction by affixing a specially designed self-adhesive film in order not to dazzle the vehicles travelling in the opposite direction.

Such film is provided by Lineaccessori Fiat and is available at Fiat Dealerships.

ABS SYSTEM

ABS is an integral part of the braking system which prevents, whatever the road conditions and force applied to the brake pedal, the wheels from locking and consequently sliding under braking, thus ensuring that the vehicle remains under control even during emergency braking.

The EBD system (Electronic Braking Force Distribution) completes the system allowing the brake force to be distributed between the front and rear wheels.

IMPORTANT To obtain the maximum efficiency of the braking system, a bedding-in period of about 500 km is needed: during this period it is better to avoid sharp, repeated and prolonged braking.

WARNING

The ABS gets the most from the available grip, but it cannot improve it; you should therefore take every care when driving on slippery surfaces and not take unnecessary risks.

SYSTEM INTERVENTION

The driver can feel that the ABS system has come into action because the brake pedal pulsates slightly and the system gets noisier: it means that the car speed should be altered to suit the type of road surface.

WARNING

When the ABS cuts in and you feel the brake pedal pulsating, do not raise your foot, but keep it pressed; in doing so you will stop in the shortest amount of space possible depending on the current road conditions.

WARNING

If the ABS intervenes, it is a sign that the grip between tyre and the road surface has reached the limit: you must slow down to adapt the speed to the road grip available.

ABS FAILURE INDICATION

This is indicated by the (ABS) warning light on the instrument panel together with the dedicated message on the multifunction display (for versions/ markets where available) coming on (see "Warning lights and messages" section).

In the case, the braking system will work as normal without the extra capacity offered by the ABS system. Drive carefully to the nearest Fiat Dealership to have the system checked.

EBD FAILURE INDICATION

This is indicated by the warning lights (ABS) and (!) on the instrument panel together with the dedicated message on the multifunction display (for versions/markets where available) coming on (see "Warning lights and messages" section).

In this case, the rear wheels may suddenly lock and the vehicle may swerve when braking sharply. Drive carefully to the nearest Fiat Dealership to have the system checked.

WARNING

If only the warning light (!) on the instrument panel switches on - together with a message in the multifunction display (for versions/markets, where provided) - stop the car immediately and contact the nearest Fiat Dealership. Fluid leaking from the hydraulic system will compromise the operation of the braking system, whether it is of the conventional type or with ABS.

BRAKE ASSIST
(emergency braking assistance)
(for versions/markets, where provided)

The system, which cannot be turned off, recognises emergency braking (on the basis of the brake pedal operating speed) and speeds up the response of the braking system.

Brake Assist is deactivated on the versions equipped with ESP, in the event of ESP system failure, indicated by warning light ⚠ coming on together with the message on the display.

ESP SYSTEM
(Electronic Stability Program)
(for versions/markets, where provided)

This is an electronic system that controls car stability in the event of tyre grip loss, helping maintain directional control.

The ESP system is therefore particularly useful when the grip conditions of road surfaces change.

With the ESP, the car is provided with ASR (traction control with interventions on brakes and engine), HILL HOLDER (device for starting on gradients without using the brakes), MSR (control of engine braking torque when shifting gear down) and HBA (automatic increase of braking pressure in the case of emergency braking).

SYSTEM INTERVENTION

It is signalled by the blinking of the warning light ⚠ on the instrument panel, to inform the driver that the car is in critical stability and grip conditions.

SYSTEM ACTIVATION

The ESP system comes on automatically when the vehicle is started and cannot be turned off.

ESP SYSTEM FAILURE INDICATIONS

In the event of a failure, the ESP system will be automatically switched off and warning light ⚠ will switch on constantly on the instrument panel (on some versions along with a message on the display, see "Warning lights and messages" chapter). In this case, contact a Fiat Dealership.

WARNING

Do not take unnecessary risks, even if your vehicle is fitted with an ESP system. Your driving style must always be suited to the road conditions, visibility and traffic. The driver is always responsible for road safety.

HILL HOLDER SYSTEM

(for versions/markets, where provided)

It's integral to the ESP system. It automatically activates with the following conditions:

- ❒ uphill: vehicle stationary on a road with a gradient higher than 5%, engine running, clutch and brake pedals pressed and gearbox in neutral or gear other than reverse engaged;
- ❒ downhill: car stationary on a road with a gradient higher than 5%, engine running, clutch and brake pedal pressed and reverse gear engaged.

When setting off the ESP system control unit will keep brake force on wheels until the torque necessary for starting is reached, or in any case for max. 2 seconds in order to pass easily from the brake pedal to the accelerator pedal.

When two seconds have elapsed, without starting, the system is automatically deactivated, gradually releasing the braking pressure. During this release stage, the typical mechanical brake release noise can be heard, indicating that the car is about to move.

HILL HOLDER SYSTEM FAILURE INDICATIONS

A possible system failure is indicated by the ⚠ warning light on the instrument panel - together with the dedicated message in the multifunction display (for versions/markets, where provided) - coming on (see "Warning lights and messages" chapter).

IMPORTANT The Hill Holder system is not a parking brake, therefore do not leave the car without activating the handbrake, switching off the engine and engaging first gear.

WARNING

If the space-saver wheel is used, the ESP system keeps operating. Always remember that the space-saver wheel, being smaller than the original wheel, provides less grip. For the correct operation of the ESP and ASR systems it is vital that the tyres are the same make and the same type on all the wheels, in perfect condition and, above all, the recommended type, make and size.

ASR SYSTEM (Antislip Regulation)

This is integral to the ESP system and automatically intervenes if one or both drive wheels slip, helping the driver to control the car.

Depending on the slipping conditions, two different control systems are activated:

❒ if the slipping involves both drive wheels, the ASR intervenes reducing the power transmitted by the engine;

❒ if the slipping only involves one of the drive wheels, the ASR intervenes automatically braking the wheel that is slipping.

The action of the ASR system is particularly helpful in the following circumstances:

❒ slipping of the inner wheel on bends due to dynamic variations in the load or excessive acceleration;

❒ excessive power transmitted to the wheels, also in relation to road surface conditions;

❒ acceleration on slippery, snowy or icy road surfaces;

❒ loss of grip on wet road surfaces (aquaplaning).

MSR SYSTEM (ENGINE DRIVE REGULATION)

This is an integral part of the ASR system that, in the event of a sudden gear downshifting, cuts in and provides torque to the engine thus preventing excessive drive wheel drive which, especially in poor grip conditions, can lead to loss of stability.

ENGAGEMENT/DISENGAGEMENT OF THE ASR SYSTEM

The ASR system switches on automatically each time the engine is started.

When the system is active, a message is shown on the display (see “Warning lights and messages” chapter).

Whilst driving, the ASR can be deactivated and subsequently activated again by pressing the ASR OFF button on the dashboard, next to the steering wheel.

Whilst driving, the ASR can be switched off and subsequently switched on again by pressing button C.

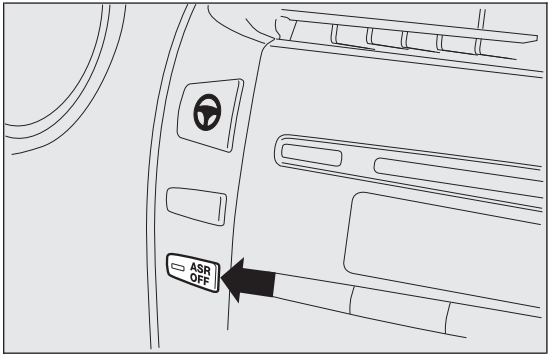

fig. 89 F0Q0694

Every time the ignition key is turned to MAR-ON the ASR OFF button LED switches on for a few seconds to indicate that the system is running a diagnosis. The LED activation should not be understood as a fault.

When the ASR is switched off, the button LED lights up (along with a message on the display, see "Warning lights and messages" chapter).

If the ASR is switched off when driving, it is automatically switched on again when the vehicle is started up.

When travelling on snowy roads with snow chains, it may be helpful to turn the ASR off: in fact, in these conditions, slipping of the drive wheels when moving off makes it possible to obtain better traction.

Fault indications In the event of a fault, the ASR system will be deactivated automatically and the ⚠ warning light will switch on constantly on the instrument panel (together with a message on the display) (see "Warning lights and messages" chapter). In this case, contact a Fiat Dealership as soon as possible.

WARNING

The ASR system will not operate when a spare wheel is fitted: in this case, the ⚠ warning light will switch on constantly in the instrument panel (together with a message on the display) (see "Warning lights and messages" chapter).

WARNING

For the correct operation of the ESP and ASR systems all four tyres must be the prescribed type and size, be all the same brand and type on each wheel, and must be in excellent condition.

EOBD SYSTEM

The EOBD system (European On Board Diagnostic) is a diagnosis system installed on the ECUs, which detects and reports possible malfunctions in the electronic systems that could worsen emissions.

The goal of the system is to:

❒ monitor the system efficiency;

❒ indicate an increase in emissions due to vehicle malfunction;

❒ indicate the need to replace components which have deteriorated.

It also alerts the driver, by turning on the warning light on the instrument panel (together with relevant message on the display), when these components are damaged; it can also report any system malfunctions (see "Warning lights and messages" chapter).

Note The car also has a connector that can be interfaced with appropriate tools, which makes it possible to read the error codes stored in the electronic control units together with a series of specific parameters for engine operation and diagnosis. This check can also be carried out by the traffic police.

IMPORTANT After an operation at the Fiat Dealership, aimed at solving malfunctions linked to the EOBD system, some bench tests should be made, along with road tests if necessary, for a complete check of the system. The latter may also require the car to cover a long distance.

WIRING FOR RADIO SYSTEM

(for versions/markets, where provided)

The car may be equipped with a storage compartment on the dashboard.

The radio must be installed in the place occupied by the central storage compartment A fig. 90, where you will find the wiring.

Press on the retaining devices under the central storage compartment to extract the compartment.

WARNING

For connection to the radio system set-up, contact a Fiat Dealership to prevent any problem that could impair car safety.

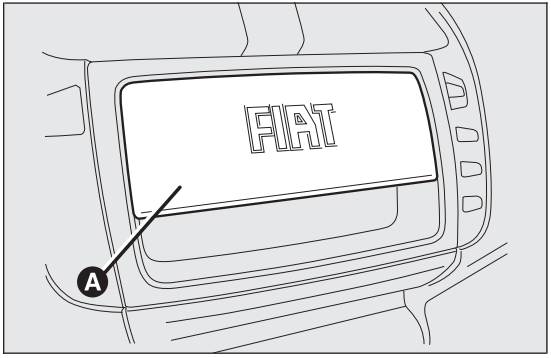

fig. 90 F0Q0691

ACCESSORIES PURCHASED BY THE OWNER

If after buying the car, you decide to install electrical accessories that require a permanent electric supply (radio, satellite anti-theft system, etc.) or accessories that in any case burden the electric supply, contact a Fiat Dealership, whose qualified personnel, besides suggesting the most suitable devices from Lineaccessori Fiat, will also evaluate the overall electric consumption, checking whether the car's electrical system is able to withstand the load required, or whether it needs to be integrated with a more powerful battery.

WARNING

Take care when fitting additional spoilers, alloy wheels or non-standard wheel hubs: they could reduce the ventilation of the brakes and affect efficiency under sharp, repeated braking or on long descents. Make sure that nothing obstructs the pedal stroke (mats, etc.)

INSTALLING ELECTRICAL/ELECTRONIC DEVICES

Electrical and electronic devices installed after buying the car in the context of after-sales service must carry the label (see fig. 91):

Fiat Group Automobiles S.p.A. authorises the installation of transceiver devices on condition that such installations are carried out in a workmanlike fashion, following the manufacturer’s instructions, at a specialised centre.

IMPORTANT Traffic police may not allow the car on the road if devices have been installed which modify the features of the car. This may also cause invalidation of warranty in relation to faults caused by the change either directly or indirectly related to it.

Fiat Group Automobiles S.p.A. shall not be liable for damage caused by the installation of accessories either not supplied or recommended by Fiat Group Automobiles S.p.A. and/or not installed in compliance with the provided instructions.

fig. 91 DISPOSITIVI-ELETTRONICI

RADIO TRANSMITTERS AND MOBILE PHONES

Radio transmitter equipment (vehicle mobile phones, CB radios etc.) cannot be used inside the car unless a separate aerial is mounted externally.

IMPORTANT The use of these devices inside the passenger compartment (without an external aerial) may cause the electrical systems to malfunction. This could compromise the safety of the car in addition to constituting a potential hazard for passengers' health.

In addition, transmission and reception of these devices may be negatively affected by the shielding effect of the car body. As far as the use of EC-approved mobile phones is concerned (GSM, GPRS, UMTS), follow the usage instructions provided by the mobile phone manufacturer.

"DUALDRIVE" ELECTRIC POWER STEERING SYSTEM

The car is equipped with an electrically controlled power steering system called “Dualdrive”, working only with the ignition key at MAR-ON and the engine running, that customises steering force according to the driving conditions.

IMPORTANT When turning the ignition key quickly, full power steering functionality can be achieved after 1-2 seconds.

ACTIVATION/DEACTIVATION (CITY function)

(for versions/markets, where provided)

To turn the function on/off, press button A fig. 92 on the dashboard, next to the steering wheel.

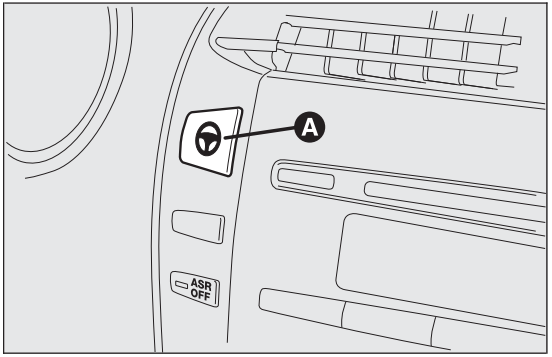

fig. 92 F0Q0693

The activation of the function is signalled by the word CITY on the display (in some versions it is signalled by the switching on of the warning light CITY).

When the CITY function is on, the steering wheel effort is lighter and parking operations are easier: therefore this function is particularly useful for driving in city centres.

FAILURE INDICATIONS

Any failure of the electric power steering system is indicated by instrument panel warning light coming on together with a message on the display (on some versions together with a symbol on the display) (see "Warning lights and messages" chapter).

In the event of electric power steering system failure, the car can be driven with mechanical steering.

SPORT FUNCTION

(for versions/markets, where provided)

The vehicle may be equipped with a system that allows a choice between two styles of driving, normal and sports.

Pressing the SPORT button fig. 93 produces a sporty driving setting characterised by higher acceleration response and more effort required at the steering wheel for a sporty driving sensation.

Pressing the SPORT button also activates the turbocharger supercharging function (overboost).

Via this function the engine management control unit allows - in relation to the position of the accelerator pedal and for a limited time - maximum pressure levels to be reached inside the turbocharger, with a consequent increase in engine torque with respect to that which is normally possible.

This function is particularly useful whenever maximum performance is required for a short time (e.g. when overtaking).

The letter S is lit up in the instrument panel display when the function is switched on. Press the button again to switch the function off and restore the normal driving setting.

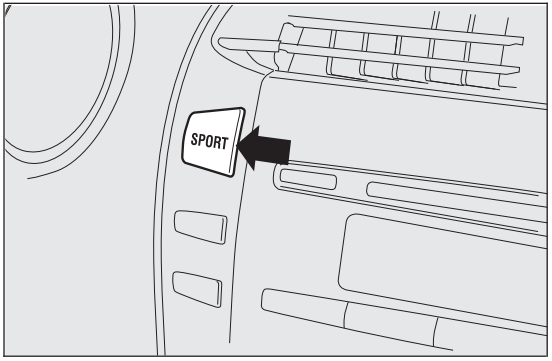

fig. 93 F0Q0499

IMPORTANT When the SPORT button is pressed, the function is activated about 5 seconds later.

IMPORTANT During acceleration, when the SPORT function is used the steering may shudder which is typical of a sports setting.

IMPORTANT During parking manoeuvres requiring a lot of steering, the steering may become harder; this is normal and is due to the intervention of the system to protect the electric steering motor from overheating; so, no intervention is required. When the car is used again later on, the power steering will work normally.

Acceleration

Sudden acceleration has a very negative effect on fuel consumption and emissions: accelerate gradually to contain consumption.

When the SPORT function is used the consumption figures will be slightly higher than those stated.

WARNING

Under no circumstances should aftermarket operations involving steering system or steering column modifications (e.g.: installation of anti-theft device) be carried out that could badly affect performance and safety. This also causes the warranty to become null and void and results in vehicle non-compliance with type-approval requirements.

WARNING

Before starting any servicing operation, stop the engine and remove the key from the ignition switch to operate the steering lock, particularly when the wheels do not touch the ground. If this is not possible (for example if the key needs to be turned to MAR-ON or the engine must be running), remove the main fuse that protects the electric power steering.

TPMS (Tyre Pressure Monitoring System)

(for versions/markets, where provided)

The car may be fitted with a tyre pressure monitoring system (TPMS), which informs the driver of the tyre inflation status via the "Check tyre pressure" and "Low tyre pressure" messages on the display. For a detailed description of the two messages, see the "Warning lights and messages" chapter.

The system comprises a radio-frequency transmitter fitted to each wheel (on the wheel rim inside the tyre), which is able to send information on the tyre inflation pressure of each wheel to the control unit.

WARNING

The presence of the TPMS does not permit the driver to neglect regular checking of the pressure of the tyres and the spare wheel (see "Wheels" in the "Maintenance and care" chapter).

WARNING

Sensor malfunctioning fault indications are not stored and will therefore not be displayed after the engine has been switched off and then on again. If the fault conditions persist, the control unit will send the relative indications to the instrument panel only after the vehicle has been in motion for a short time.

Tyre pressure must be checked with tyres rested and cold. Should it become necessary for whatever reason to check pressure with warm tyres, do not reduce pressure even though it is higher than the prescribed value, but repeat the check when tyres are cold (see "Wheels" in the "Technical data" chapter).

The TPMS is not able to warn you of sudden tyre pressure losses (for example when a tyre bursts). In this case, stop the car, braking with caution and avoiding abrupt steering.

Particularly strong radio-frequency interference may cause the TPMS to function incorrectly. This condition is indicated to the driver by a warning light (!) or symbol lighting up on the instrument panel together with a dedicated message. The message will disappear automatically as soon as the radio-frequency interference ceases to affect the system.

The TPMS requires the use of specific equipment. Contact a Fiat Dealership to find out which accessories are compatible with the system (wheels, hub caps, etc.). Using other accessories may hinder the normal operation of the system. Given the unique valve specifications, only use Fiat-approved sealers to repair the tyres. The use of other sealers may prevent the normal operation of the system.

If the vehicle is fitted with TPMS, when a tyre is removed, it is advisable to replace the rubber gasket for the valve as well as the ring nut fixing the sensor. Have this operation performed at a Fiat Dealership.

If the punctured tyre indication persists on the instrument panel after the initial conditions have been restored using the tyre repair kit ("Fix&Go Automatic"), contact a Fiat Dealership.

Changes in outside temperature may cause tyre pressures to vary. The TPMS may temporarily indicate insufficient pressure. In this case, check the tyre pressure when cold and, if necessary, restore the inflation values.

If the vehicle is fitted with TPMS, tyre and/or rims fitting/removal operations require specific precautions. To avoid damaging the sensors or fitting them incorrectly, tyre and/or rims fitting/removal operations should be carried out only by specialists. Contact a Fiat Dealership.

The tyre repair kit ("Fix&Go Automatic") provided with the car is compatible with the TPMS sensors; using sealants not equivalent with that in the original kit may adversely affect its operation. If sealants not equivalent with the original one are used, it is recommended to have the TPMS sensors checked by a qualified repair centre.

In order to use the system properly, refer to the following table when you have to change wheels/tyres:

Operation	Presence of sensor	Failure indication	Fiat Dealership intervention
–	–	YES	Contact a Fiat Dealership
Replacing a wheel with the spare wheel	NO	YES	Repair damaged wheel
Wheel change with winter tyres	NO	YES	Contact a Fiat Dealership
Wheel change with winter tyres	YES	NO	–
Wheel change with others of a different size (*)	YES	NO	Contact a Fiat Dealership
Switching wheels (front/rear)(**)	YES	NO	–

(*) Given as an alternative in the Owner Handbook and available from Lineaccessori Fiat.
(**) Not cross-swapped (tyres must stay on the same side).

PARKING SENSORS

(for versions/markets, where provided)

Parking sensors provide the driver with information on the distance when approaching obstacles behind the vehicle (versions with 4 rear sensors) or in front of and behind the vehicle (versions with 4 front and 4 rear sensors).

The system therefore provides a further aid during parking manoeuvres because it allows the identification of obstacles outside of the driver's field of vision.

The driver is notified of the presence and distance of the obstacle from the vehicle by an acoustic signal which varies depending on the distance from the obstacle (as the distance from the obstacle decreases the frequency of the acoustic signal increases).

SENSORS

In order to measure the distance of obstacles, the system uses 4 sensors located in the front bumper (for versions/markets, where provided) fig. 94 and 4 sensors located in the rear bumper fig. 95.

Version with 4 sensors

On the version with 4 rear sensors, the system is activated automatically when the reverse gear is engaged.

Version with 8 sensors

On the version with 4 front sensors and 4 rear sensors, the system is activated when reverse gear is engaged or by pressing button P fig. 96.

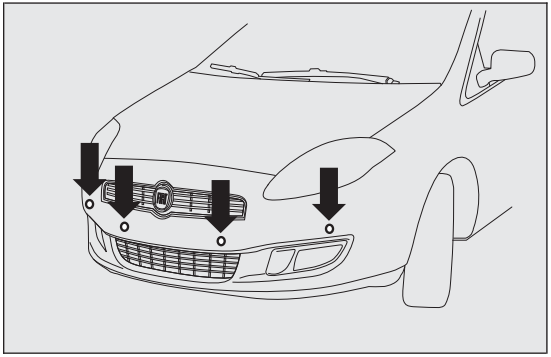

fig. 94 F0Q0745

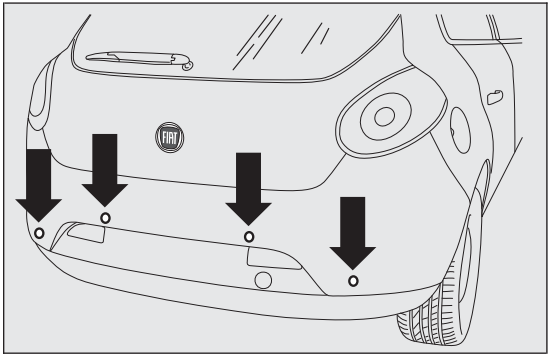

fig. 95 F0Q0603

When reverse gear is released, the front and rear sensors remain activated until a speed of around 15 km/h is exceeded to allow the parking manoeuvre to be completed.

The system can also be activated by pressing the button P fig. 96 in the central panel: a warning light in the button comes on when the system is activated.

Every time the ignition key is turned to MAR-ON the LED on the button P flashes briefly to indicate that the system is running a diagnosis. The LED activation should not be understood as a fault.

The sensors are deactivated by pressing the button again P fig. 96 or when a speed of 15 km/h is exceeded: the warning light in the button is off when the system is not active.

When the sensors are activated, the system starts to produce acoustic signals from the front or rear buzzers as soon as an obstacle is detected with the frequency increasing as the obstacle gets closer.

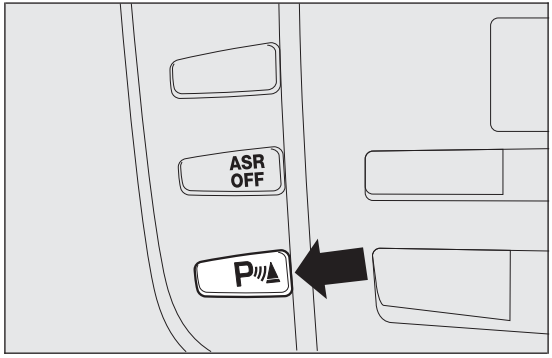

fig. 96 F0Q0035

When the obstacle is less than about 30 cm away, the sound becomes continuous. Depending on the position of the obstacle (in front or behind) the sound is produced by the corresponding buzzers (front or rear). The obstacle closest to the vehicle is signalled.

The acoustic signal stops immediately if the distance of the obstacle increases. The sound cycle remains constant if the distance measured by the centre sensors remains unchanged, while if this situation occurs for the side sensors, the signal is interrupted after about 3 seconds (for example, to prevent signals in the case of manoeuvres alongside walls).

WARNING

Parking and other dangerous manoeuvres however are always the driver's responsibility. When making these manoeuvres, always make sure that no people (especially children) or animals are present in your manoeuvring space. The parking sensors are designed to assist drivers: in any case, you must always pay the utmost attention during potentially dangerous manoeuvres, even when carried out at low speed.

ACOUSTIC SIGNAL

The information concerning the presence and distance of an obstacle from the vehicle is transmitted by means of acoustic signals from buzzers installed in the passenger compartment:

❒ in the versions with 4 rear sensors, a buzzer in the front dashboard area warns of the presence of rear obstacles;

❒ in the versions with 8 sensors (4 front and 4 rear sensors), a front buzzer warns of the presence of obstacles at the front and a buzzer located at the rear warns of the presence of obstacles at the rear. This notifies the driver of the direction (front/rear) of the obstacles.

When reverse gear is engaged an intermittent acoustic signal is automatically activated.

The acoustic signal:

❒ increases as the distance between the car and the obstacle decreases;

❒ becomes continuous when the distance between the car and the obstacle is less than 30 cm and stops immediately if the distance increases;

❒ remains constant if the distance remains unchanged; if this situation concerns the side sensors, the buzzer will stop after about 3 seconds to avoid, for example, warning indications in the event of manoeuvres along walls.

WARNING

For correct operation, sensors must always be clean from mud, dirt, snow or ice. Be careful not to scratch or damage the sensors while cleaning them. Avoid using dry, rough or hard cloths. The sensors should be washed using clean water with the addition of car shampoo if necessary. In washing stations, clean sensors quickly keeping the vapour jet/high pressure washing nozzles at 10 cm at least from the sensors.

WARNING

Only have the bumpers repainted or any retouches to the paintwork in the area of the sensors carried out by a Fiat Dealership. Incorrect paint application could affect the operation of the parking sensors.

SENSOR OPERATING RANGE

The sensors allow the system to check the front part (version with 8 sensors) and rear part of the vehicle.

Their position covers the middle and side areas of the front and rear of the vehicle.

If an obstacle is located in a middle area, it is detected when the distance is less than about 0.9 m (front) and 1.40 m (rear).

If the obstacle is located at the side, it is detected at distances of less than 0.6 m.

OPERATION WITH TRAILER

The operation of the sensors is automatically deactivated when the trailer's electric cable plug is inserted in the car's tow hook socket.

The sensors are automatically enabled again when the trailer's cable plug is removed.

IMPORTANT If you wish to leave the tow hook fitted when there is no trailer, it is advisable to contact a Fiat Dealership to have the system updated because the tow hook could be detected as an obstacle by the central sensors.

FAILURE INDICATIONS

Any failures in the parking sensor system are signalled, when reverse gear is engaged, by the warning light ⚠ in the instrument panel lighting up or by the symbol P together with a message in the display (see "Warning lights and messages" chapter).

GENERAL WARNINGS

During parking manoeuvres, pay the utmost attention to any obstacles that could be located above or below the sensors.

Under certain circumstances close objects located in front of or behind the car may not be detected and could therefore cause damage to the car or be damaged themselves.

The following conditions may influence the performance of the parking sensor system:

- ❒ Reduced sensor sensitivity and a reduction in the parking assistance system performance could be due to the presence on the surface of the sensor of: ice, snow, mud, thick paint.
- ❒ The sensors may detect a non-existent obstacle (echo interference) due to mechanical interference, for example when washing the car, in rain (strong wind), hail.
- ❒ The signals sent by the sensors can also be altered by the presence of ultrasonic systems (e.g. pneumatic brake systems or pneumatic drills) near the vehicle.

❒ The performance of the parking assistance system may also be affected by the position of the sensors. For example, if the geometry is altered (as a result of wear of the shock absorbers, suspension), the tyres are changed, the vehicle is too heavily laden or specific tuning is carried out that lowers the vehicle.

❒ The detection of obstacles at the top part of the car may not be guaranteed because the system detects obstacles that could cause an impact with the car in the bottom part.

AT THE FILLING STATION

MOTORI DIESEL - Operation at low temperatures

If the outside temperature is very low, diesel thickens due to the formation of paraffin clots with consequent defective operation of the fuel supply system.

In order to avoid these problems, different types of diesel are distributed according to the season: summer type, winter type and arctic type (cold/mountain areas). If refuelling with diesel fuel whose specifications are not suitable for the current temperature, it is advisable to mix TUTELA DIESEL ART additive in the proportions shown on the container. Pour the additive into the tank before the diesel fuel.

When using or parking the car for a long time in the mountains or cold areas, it is advisable to refuel using locally available diesel. In this case, it is also advisable to keep the tank over 50% full.

For diesel engines, only use diesel fuel for motor vehicles in accordance with EN 590 European specifications. The use of other products or mixtures may damage the engine beyond repair and consequently invalidate the warranty, due to the damage caused. If you accidentally refuel with another type of fuel, do not start the engine, and drain the tank. If the engine has been run for even an extremely limited amount of time, you must not only drain the fuel tank, but the rest of the supply circuit as well.

REFUELLING CAPACITY

To fill the tank completely, top-up twice after the first click of the fuel delivery gun. Further top-ups could cause faults in the fuel feeding system.

FUEL FILLER CAP

Opening fig. 97

Open flap A pulling it outwards, hold cap B still, insert the ignition key in the lock and turn it anticlockwise.

Turn the cap anticlockwise and remove it. The cap has a device C that attaches it to the flap so it cannot be lost. When refilling, attach the cap to the flap, as shown.

Closing

Fit the cap (complete with key) and turn it clockwise until it clicks once or more.

Turn the key clockwise and extract it, then close the flap.

IMPORTANT The airtight sealing of the tank may cause a slight vacuum. A suction noise when you release the cap is therefore entirely normal.

WARNING

Do not bring naked flames or lit cigarettes near to the fuel tank opening: fire risk. Keep your face away from the fuel filler to prevent breathing in harmful vapours.

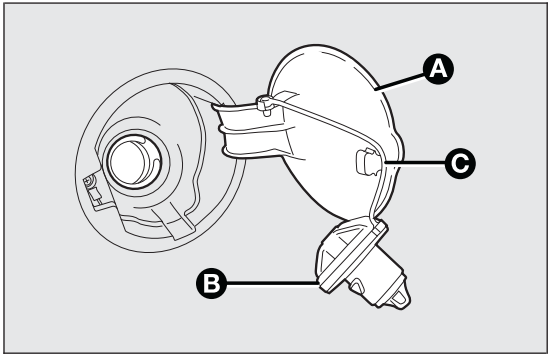

fig. 97 F0Q0695

PROTECTING THE ENVIRONMENT

The following devices are used for reducing diesel fuel engine emissions:

❒ oxidising catalytic converter

❒ exhaust gas recirculation system (EGR)

❒ particulate filter (DPF).

WARNING

Under normal operating conditions, the silencer becomes very hot. Therefore do not park the car on flammable materials (grass, dry leaves, pine needles, etc.): fire hazard.

DIESEL PARTICULATE FILTER (DPF)

(for versions/markets, where provided)

The Diesel Particulate Filter is a mechanical filter, integral with the exhaust system, that physically traps particulates present in the exhaust gases of diesel engines. The diesel particulate filter has been adopted to eliminate almost all particulates in compliance with current / future legal regulations.

During normal use of the vehicle, the engine control unit records a set of data (e.g.: travel time, type of route, temperatures, etc.) and it will then calculate how much particulate has been trapped by the filter.

Since this filter physically traps particulate, it should be regenerated (cleaned) at regular intervals by burning the carbon particles. The regeneration procedure is controlled automatically by the engine management control unit according to the filter conditions and vehicle use conditions. There may be a limited increase in the engine speed during the regeneration, a limited increase in fumes and high temperatures at the exhaust. These are not faults; they do not impair vehicle performance or damage the environment.

Particulate filter clogged

If the warning light switches on on the instrument panel (along with the message on the display) refer to the "Warning lights and messages" chapter.

GETTING TO KNOW YOUR CAR
SAFETY
STARTING AND DRIVING
WARNING LIGHTS AND MESSAGES
IN AN EMERGENCY
SERVICING AND MAINTENANCE
TECHNICAL SPECIFICATIONS
INDEX

SEAT BELTS

USING THE SEAT BELTS

The seat belt should be worn keeping the torso straight and rested against the backrest.

To fasten the seat belts, hold the tongue A fig. 98 and insert it into the buckle B, until it clicks into place.

If the seat belt jams during removal, let it rewind for a short stretch, then pull it out again without jerking.

To unfasten the seat belt, press button C. Guide the seat belt with your hand while it is rewinding, to prevent it from twisting.

Through the retractor, the seat belt automatically adapts to the body of the occupant wearing it, allowing freedom of movement.

The reel may lock when the car is parked on a steep slope: this is perfectly normal. Furthermore, the reel mechanism locks the belt if it is pulled sharply or in the event of sudden braking, collisions and high-speed bends.

The rear seat is fitted with inertia seat belts with three anchor points and a reel for the side seats and the middle one.

Wear the rear seat belts as shown in fig. 99.

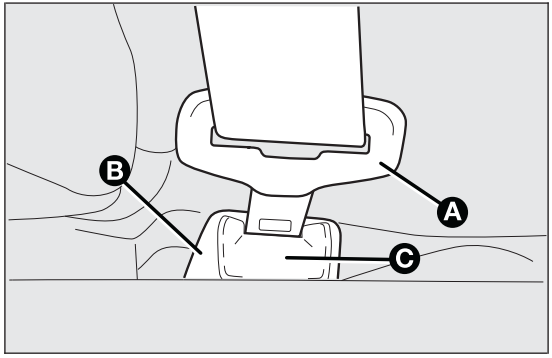

fig. 98 F0Q0696

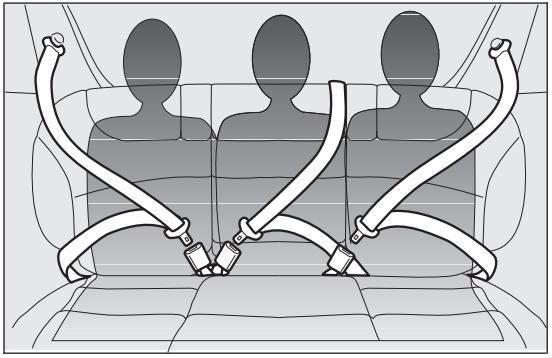

fig. 99 F0Q0267

WARNING

Never press button C fig. 98 when travelling.

IMPORTANT The backrest is correctly secured when the red band B fig. 100 to the side of backrest folding handle A disappears. This red band indicates that the backrest is not secured.

IMPORTANT Remember that after a violent impact, rear-seat passengers who are not wearing their seat belts not only expose themselves to significant risk of injury, but also represent a danger to passengers occupying the front seats.

IMPORTANT When putting the rear seat back in its normal position, make sure that the seat belts are positioned so that they are ready to use.

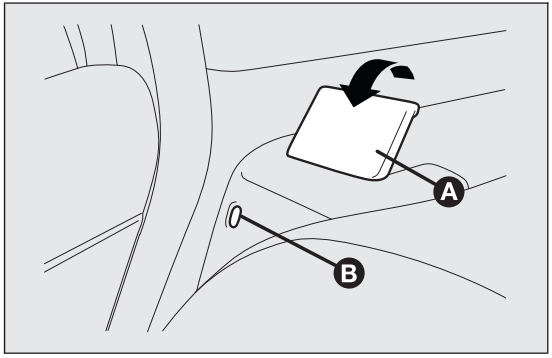

fig. 100 F0Q0683

WARNING

Make sure that the backrest is correctly secured on both sides (red bands B fig. 100 not visible) to prevent it from moving forward in the event of sharp braking, causing injuries to passengers.

ADJUSTING THE FRONT SEAT BELT HEIGHT

(for versions/markets, where provided)

Four different adjustments in height are possible.

To adjust, press button A fig. 101 and raise or lower handle B.

Always adjust the height of the seat belts to fit the person wearing it: this precaution could greatly reduce the risk of injury in the event of collision.

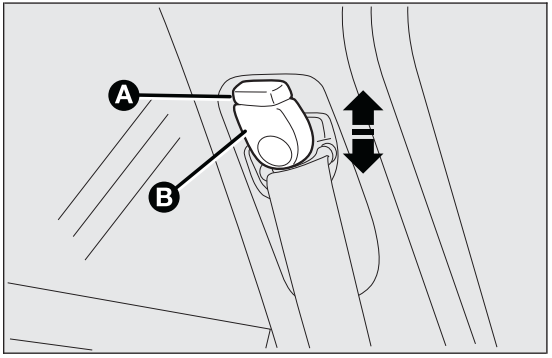

fig. 101 F0Q0697

Correct adjustment is obtained when the belt passes approximately half way between the shoulder and the neck.

WARNING

Make height adjustment of the seat belts when the car is stationary.

WARNING

After adjustment, always check that the cursor to which the ring is fastened is locked in one of the preset positions. To do this, with the button A fig. 101 released, exert a further pressure to allow the anchor device to catch if release did not take place at one of the preset positions.

SBR SYSTEM

This system consists of a buzzer which, in conjunction with the warning light flashing on the instrument panel (initially in fixed mode with continuous acoustic signal and then in flashing mode with intermittent acoustic signal), warns the driver and front passenger that their seat belts have not been fastened.

For long-term deactivation of the SBR system, contact a Fiat Dealership. The SBR system can be reactivated at any time through the Setup Menu only (see the "Menu Items" paragraph in the "Knowing your car" chapter).

PRETENSIONERS

The car is equipped with front seat belts pretensioners, that reduce slack in the belts in the event of a severe frontal impact. This guarantees the perfect adherence of the seat belts to the occupants' bodies before the restraining action begins.

The retractors lock to indicate that the pretensioner has intervened.

This car is also equipped with a second pretensioner (in the kick plate area). Its activation is signalled by the shortening of the metal cable.

A slight discharge of smoke may be produced during the activation of the pretensioner which is not harmful and does not involve any fire hazard.

IMPORTANT To obtain the highest degree of protection from the action of the pretensioner, wear the seat belt tight to the chest and pelvis.

The pretensioner does not require any maintenance or lubrication: any changes to its original conditions will invalidate its efficiency. If, due to unusual natural events (floods, sea storms, etc.), the device has been affected by water and mud, it must be replaced.

WARNING

The pretensioner may be used only once. Contact a Fiat Dealership to have it replaced after it has been deployed.

Operations which lead to impacts, vibrations or localised heating (over 100°C for a maximum of six hours) in the area around the pretensioner may damage or deploy it. Contact a Fiat Dealership should intervention be necessary on these components.

LOAD LIMITERS

To increase passenger safety in an accident, the front and rear (for versions/markets where provided) seat belt reels contain a load limiter which controls the force acting on the chest and shoulders during the restraining action of the belts in the event of a head-on collision.

GENERAL INSTRUCTIONS FOR USING THE SEAT BELTS

The driver must comply with (and have all car passengers follow) any local regulations in force concerning the use of seat belts. Always fasten the seat belts before setting off.

Seat belts are also to be worn by pregnant women: the risk of injury in the case of accident is greatly reduced for them and the unborn child if they are wearing a seat belt.

Pregnant women must position the lower part of the belt very low down so that it passes over the pelvis and under the abdomen (see fig. 102). The best way to protect the unborn child is to protect the mother. When a safety belt is worn properly, it is more likely that the unborn child will not be hurt in a crash. For pregnant women, as for anyone, the key to making safety belts effective is wearing them properly.

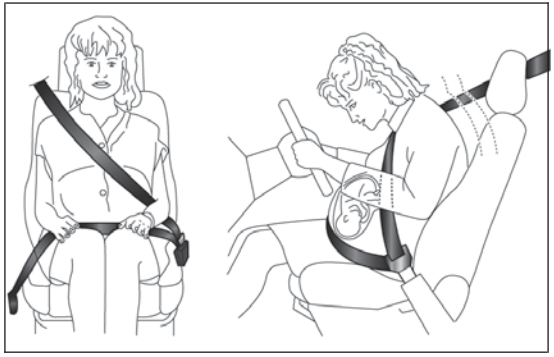

fig. 102 F0Q0885

WARNING

For maximum safety, keep the back of your seat upright, lean back into it and make sure the seat belt fits closely across your chest and pelvis. Always fasten the seat belts on both the front and the rear seats! Travelling without wearing seat belts will increase the risk of serious injury or even death in the event of an accident. Removing or otherwise tampering with seat belt and pretensioner components is strictly prohibited. Any operations on these components must be performed by qualified and authorised technicians. Always go to a Fiat Dealership.

IMPORTANT The seat belt must not be twisted. The upper part must pass over the shoulder and cross the chest diagonally. The lower part must adhere to the pelvis (as shown in fig. 103) rather than the abdomen of the occupant. Never use devices (clips, clamps, etc.) to hold the seat belt away from your body.

IMPORTANT Each seat belt must be used by only one person. Never travel with a child sitting on the passenger's lap and a single belt to protect them both fig. 104. In general, do not place any objects between the person and the belt.

WARNING

If the belt has been subjected to a high level of stress, for example after an accident, it must be completely replaced together with the attachments, attachment fixing screws and the pretensioner. In fact, even if the belt has no visible defects, it could have lost its resilience.

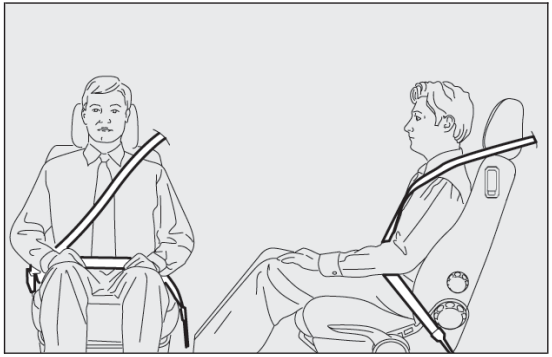

fig. 103 F0Q0038

fig. 104 F0Q0039

SEAT BELTS MAINTENANCE

Observe the following precautions for correct seat belt maintenance:

- ❒ always use the seat belt with the strap well stretched and not twisted; make sure that it is free to run without obstructions;
- ❒ check seat belt operation as follows: attach the seat belt and pull it hard;
- ❒ replace the belt after an accident of a certain severity even if it does not appear to be damaged. Always replace the seat belt if the pretensioners were deployed;
- ❒ to clean the seat belts, wash by hand with water and neutral soap, rinse and leave to dry in the shade. Never use strong detergents, bleach, paints or any other substance which could damage the belt fibres;
- ❒ prevent the reels from getting wet: their correct operation is only guaranteed if water does not get inside;
- ❒ replace the seat belt when it shows wear or cuts.

CARRYING CHILDREN SAFELY

For optimal protection in the event of an impact, all occupants must be seated and wearing adequate restraint systems, including newborn and other children!

This prescription is compulsory in all EC countries according to EC Directive 2003/20/EC.

Compared with an adult, a child's head is larger and heavier in proportion to his/her body and the child's muscular and bone structures are not fully developed. Therefore, correct restraint systems other than adult seat belts are necessary to reduce as much as possible the risk of injuries in the event of an accident, braking or a sudden manoeuvre.

Children must be seated safely and comfortably. As far as the characteristics of the child restraint systems used allow, you are advised to keep children in rear facing restraint systems for as long as possible (at least until 3–4 years old), since this is the most protected position in the event of an impact.

The choice of the most suitable child restraint device depends on the weight of the child; there are various types of child restraint systems and you are advised always to choose the one that is most suitable for the child.

When over 1.50 m in height, from the point of view of restraint systems, children are considered as adults and wear seat belts normally.

In Europe the characteristics of children restraint systems are ruled by the regulation ECE-R44, dividing them into five weight groups:

Group	Weight groups
Group 0	up to 10 kg of weight
Group 0+	up to 13 kg of weight
Group 1	9-18 kg in weight
Group 2	15-25 kg in weight
Group 3	22-36 kg of weight

All child restraint devices must bear the certification data, together with the control mark, on a label solidly fixed to the seat which must never be removed.

Lineaccessori Fiat offers child restraint systems for each weight group. These devices are recommended having been specifically designed for Fiat cars.

WARNING

SEVERE DANGER. When an active passenger airbag is fitted, DO NOT install rear facing child restraint systems on the front seat. Deployment of the airbag in an accident could cause fatal injuries to the child regardless of the severity of the impact. It is advisable to always carry children in a child restraint system on the rear seat, which is the most protected position in the event of a collision.

WARNING

On the sun visor there is a label with suitable symbols reminding the user that it is compulsory to deactivate the airbag if a rear facing child restraint system is fitted. Always comply with the instructions on the passenger's side sun visor (see the "Front airbag" paragraph).

WARNING

Do not move the front or rear seat if a child is seated on it or on the dedicated child restraint system.

FITTING "UNIVERSAL" CHILD RESTRAINT SYSTEM (with seat belts)

GROUP 0 and 0+

WARNING

The diagram is indicative and for fitting purposes only. Fit the child restraint system according to the instructions, which must be included.

Children up to 13 kg must be carried with rearward facing restraint system of a type as shown in fig. 105 which, supporting the head, does not induce stress on the neck in the event of sudden decelerations.

The rearward facing infant seat is restrained by the car seat belts, as shown in fig. 105 and it must restrain the child in turn with its own belts.

GROUP I

WARNING

The diagram is indicative and for fitting purposes only. Fit the child restraint system according to the instructions, which must be included.

Children of weight from 9 to 18 kg may be carried in forward facing child restraint systems fig. 106.

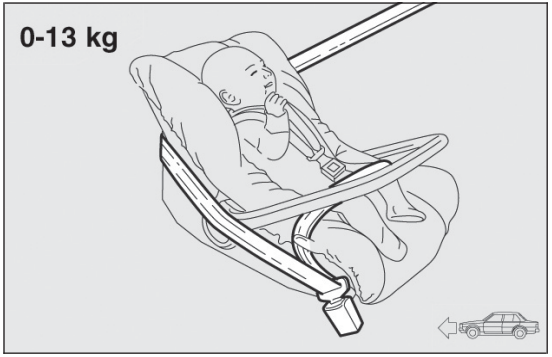

fig. 105 F0Q0429

fig. 106 F0Q0772

WARNING

Child restraint systems with Isofix attachments are available for a safe anchoring to the seat without using the car seat belts.

GROUP 2

WARNING

The diagram is indicative and for fitting purposes only. Fit the child restraint system according to the instructions, which must be included.

Children from 15 to 25 kg may use the car seat belts directly fig. 107.

In this case, the child restraint system is used to position the child correctly with respect to the seat belts so that the diagonal belt section crosses the child's chest and not the neck, and the lower part is snug on the pelvis not the abdomen.

fig. 107 F0Q0431

GROUP 3

WARNING

The diagram is indicative and for fitting purposes only. Fit the child restraint system according to the instructions, which must be included.

For children between 22 kg and 36 kg, there are dedicated restraint systems that allow the seat belt to be worn correctly.

The fig. 108 shows the correct child positioning on the rear seat.

Children over 1.50 m in height can wear seat belts like adults.

fig. 108 F0Q0432

SUITABILITY OF PASSENGER SEATS FOR UNIVERSAL RESTRAINT SYSTEM USE

According to the European Directive 2000/3/EC the suitability of each passenger seat position for the fixing of universal child restraint systems is shown in the following table:

Group	Weight range	Front passenger	Rear side passengers	Rear central passenger
Group 0, 0+	up to 13 kg	U	U	U
Group 1	9–18 kg	U	U	U
Group 2	15–25 kg	U	U	U
Group 3	22–36 kg	U	U	U

U= suitable for child restraint systems in the "Universal" category, according to European Regulation EEC-R44 for the specified "Groups".

ISOFIX CHILD RESTRAINT SYSTEM SETUP

The car is equipped with ISOFIX anchorages, a new standard which makes fitting a child restraint system quick, simple and safe.

Isofix systems can be fitted alongside conventional child restraint systems on different seats in the same car.

fig. 109An example of a Universal Isofix child restraint system for weight group 1.

WARNING

The diagram is indicative and for fitting purposes only. Fit the child restraint system according to the instructions, which must be included.

The other weight groups are covered by specific Isofix child restraint systems, which can be used only if specifically tested for this car (see list of cars provided with the child restraint system).

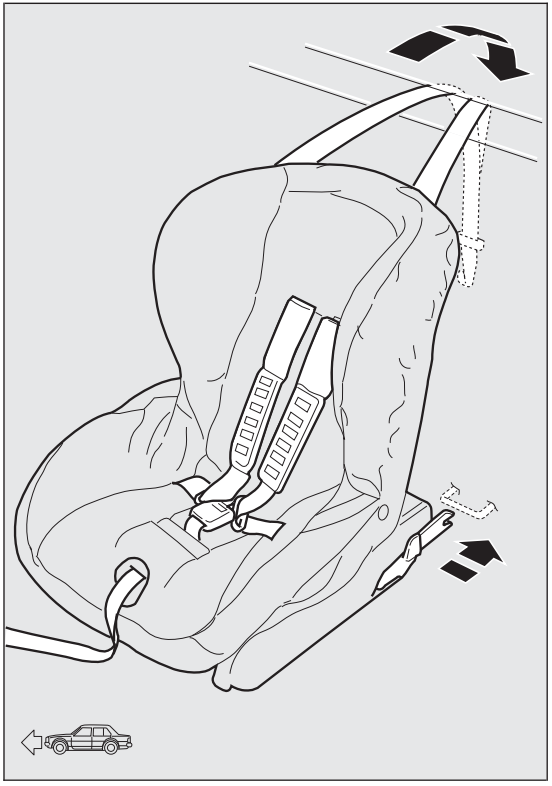

fig. 109 F0Q0614

INSTALLING A UNIVERSAL ISOFIX CHILD RESTRAINT SYSTEM

Attach the restraint system to the two metal anchorages A fig. 110 located where the rear seat cushion meets the backrest, then fix the upper strap (available together with the restraint system) to the dedicated anchorage B fig. 111 located at the bottom behind the backrest.

Remember that when using a Universal Isofix child restraint system, you can use approved child restraint systems with the marking ECE R44/03 (R44/03 or superior) “Universal Isofix”.

WARNING

If a Universal Isofix child seat is not fixed to all three anchorages, the child seat will not be able to protect the child correctly. In a crash, the child could be seriously or fatally injured.

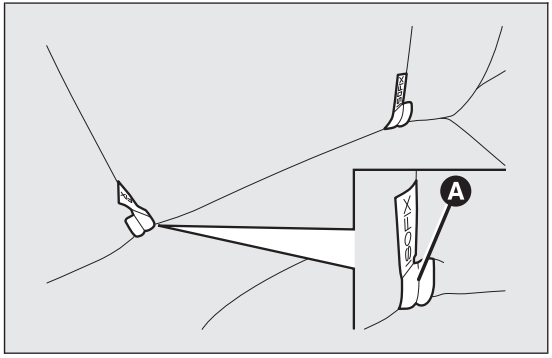

fig. 110 F0Q0698

The Universal Isofix “Duo Plus” child seat and the special "G 0/1" seat are available from Lineaccessori Fiat.

For any further details on installation/use, refer to the instruction manual for the child seat.

WARNING

Fit the child seat when the car is stationary. The child seat is correctly anchored to the brackets when you hear the click. Follow the instructions for assembly, disassembly and positioning that the manufacturer must supply with the child seat.

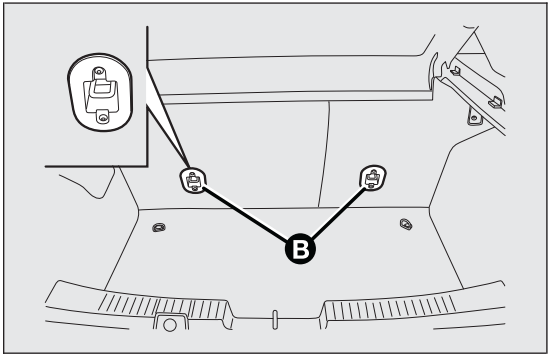

fig. 111 F0Q0699

SUITABILITY OF PASSENGER SEATS FOR ISOFIX CHILD RESTRAINT SYSTEM USE

The table below shows the various installation possibilities for Isofix child restraint systems on seats fitted with Isofix attachments in accordance with European standard ECE 16.

Weight group	Child restraint system position	Isofix size class	Rear side passengers
Group 0 up to 10 kg	Rear facing	E	IL
Group 0+ up to 13 kg	Rear facing	E	IL
	Rear facing	D	IL
	Rear facing	C	IL (*)
Group 1 from 9 up to 18 kg	Facing backwards	D	IL
	Facing backwards	C	IL (*)
	Forward facing	B	IUF
	Forward facing	BI	IUF
	Forward facing	A	IUF

IL : suitable for ISOFIX child restraint systems of the categories for "specific vehicles", "restricted", or "semiuniversal", approved for this type of vehicle.

(*)The Isofix child seat can be installed by moving the front seat all the way up.

IL Suitable for special child restraint systems. Isofix type suitable and tested for this type of car. The seat can be installed by moving the front seat forward.

IUF: suitable for forward facing Isofix child restraint systems in the Universal category and type-approved for the use in the weight group.

WARNING

Fit the child restraint system according to the instructions, which must be included.

Main recommendations to carry children safely:

- ❒ Install the child restraint systems on the rear seat, which is the most protected position in the event of an accident.
- ❒ Keep children in rear facing restraint systems for as long as possible, until 3–4 years old if possible.
- ❒ Should a rear facing child restraint system be installed on the rear seats, it is advisable to position it as far forward as the position of the front seat allows.
- ❒ If the passenger's front airbag is deactivated always check the warning light on the instrument panel to make sure that it has actually been deactivated.
- ❒ Carefully follow the child restraint manufacturer's instruction supplied with the child restraint system. Keep the instructions in the car along with the other documents and this handbook. Do not use second-hand child restraint systems without instructions.
- ❒ Only one child is to be strapped into each retaining system; never carry two children using one child restraint system.
- ❒ Always check that the seat belts do not interfere with the child's throat.
- ❒ Always check that the seat belt is well fastened by pulling on it.
- ❒ While travelling, do not let the child sit incorrectly or unfasten the belts.
- ❒ Never allow a child to put the belt's diagonal section under an arm or behind their back.
- ❒ Never carry children on your lap, even newborns. No-one can restrain a child in the event of an accident.
- ❒ In the event of an accident, replace the child restraint system with a new one.

FRONT AIRBAGS

The car is fitted with front airbags for the driver and the passenger, and with a knee bag on the driver's side (for versions/markets, where provided).

The front driver/passenger airbags and the driver's knee bag (for versions/markets, where provided) have been designed to protect the front seat occupants in the event of frontal impacts of medium/high severity, by placing the bag between the occupant and the steering wheel or dashboard.

Therefore non-deployment in other types of impacts (side impacts, rear shunts, roll-overs, etc.) does not indicate a system malfunction.

In the event of a frontal impact, an electronic control unit triggers the inflation of the bags if required. The cushions immediately inflate, placing themselves between the front occupants' bodies and structures that could cause injuries. Immediately after, the cushions deflate.

The front driver/passenger airbags and the driver's knee bag (for versions/markets, where provided) are not a replacement for, but rather complement the use of, seat belts, which should always be worn, as specified by law in Europe and most non-European countries.

In the event of an impact, those not wearing a seat belt will move forward and come into contact with the bag which is still inflating. The protection offered by the bag is compromised in these circumstances.

Front airbags may not be activated in the following situations:

❒ frontal impacts against highly deformable objects not involving the front surface of the car (e.g. wing collision against guard rail, etc.);

❒ car wedging under other vehicles or protective barriers (e.g. trucks or guard rails);

Failure to activate in the conditions described above is due to the fact that they may not provide any additional protection compared with seat belts, so their activation would be inappropriate.

In these cases, non-deployment does not indicate a system malfunction.

WARNING

Do not apply stickers or other objects on the steering wheel, on the dashboard in the passenger side airbag area, on side upholstery on the roof or on the seats. Never put objects (e.g. mobile phones) on the passenger's side dashboard since they could interfere with correct inflation of the airbag and also cause serious injury to the passengers.

FRONT AIRBAG DRIVER'S SIDE

This consists of an instantly inflating bag contained in a special compartment in the centre of the steering wheel fig. 112.

WARNING

Always drive with both hands on the steering wheel so that, if the airbags must be deployed, they may do so freely. Do not drive with your body bent forward. Keep your back straight against the backrest.

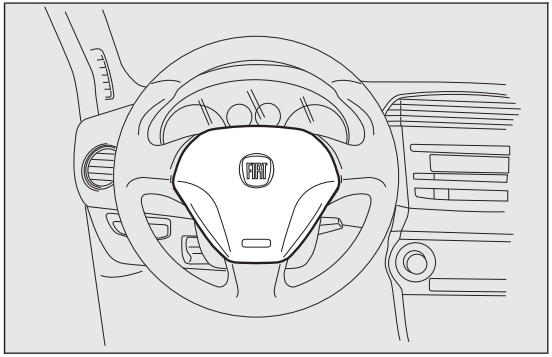

fig. 112 F0Q0624

FRONT AIRBAG PASSENGER'S SIDE

This consists of an instantly inflating bag contained in a special recess in the dashboard: this bag has a larger volume than that of the driver fig. 113.

The front driver and passenger airbags are designed and calibrated to best protect front-seat passengers wearing seat belts.

The volume of the front airbags at max. inflation fills most of the space between the steering wheel and the driver and between the dashboard and the passenger.

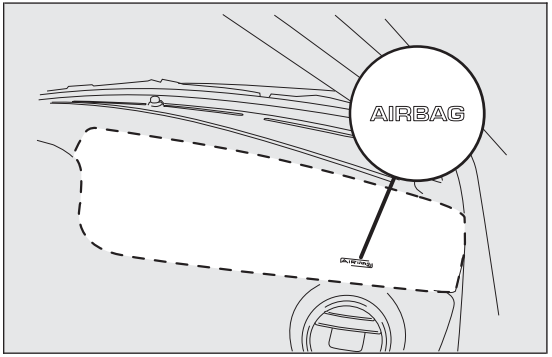

fig. 113 F0Q0700

WARNING

SEVERE DANGER When an active passenger airbag is fitted, DO NOT install rearward facing child restraint systems on the front seat. Deployment of the airbag in an accident could cause fatal injuries to the child regardless of the severity of the impact. Therefore, always deactivate the passenger airbag when a rearward facing child restraint system is installed on the front passenger seat. The front passenger seat must also be positioned back as far as possible in order to avoid the child restraint system from coming into contact with the dashboard. Immediately reactivate the passenger airbag as soon as the child restraint system has been removed.

FRONT PASSENGER AIRBAG AND CHILD RESTRAINT SYSTEMS

WARNING

When an active passenger airbag is fitted, DO NOT install rear facing child restraint systems on the front seat. Deployment of the airbag in an accident could cause fatal injuries to the child regardless of the severity of the impact.

ALWAYS comply with the instructions on the label stuck on the passenger side sun visor fig. 114.

fig. 114 F0Q0920

I	RISCHIO DI FERITE GRAVI O MORTALI. I seggiolini bambino che si montano nel verso opposto a quello di marcia non vanno installati sui sedili anteriori in presenza di air bag passeggero attivo.
GB	DEATH OR SERIOUS INJURY CAN OCCUR. NEVER use a rearward facing child restraint on a seat protected by an ACTIVE AIRBAG in front of it, DEATH or SERIOUS INJURY to the CHILD can occur
F	RISQUE DE MORT OU DE BLESSURES GRAVES. NE PAS positionner le siège pour enfant tourné vers l'arrière, en cas d'air bag passager actif.
D	Nichtbeachtung kann TOD oder SCHWERE VERLETZUNGEN zur Folge haben. Rückwärts gerichtete Kinderrückhaltesysteme (Babyschale) dürfen nicht in Verbindung mit aktiviertem Beifahrerairbag auf dem Beifahrersitz verwendet warden
NL	DIT KAN DODELIJK ZIJN OF ERNSTIGE ONGELUKKEN VEROORZAKEN. Plaats het kinderstoeltje niet ruggelings op de voorstoel wanneer er een airbag aanwezig is.
E	PUEDE OCACIONAR MUERTE O HERIDAS GRAVES. NO ubicar el asiento para niños en sentido inverso al de marcha en el asiento delantero si hubiese airbag activo lado pasegero.
PL	MOŻE GROZIĆ ŚMIERCIA LUB CIEŹKIMI OBRAŻENIAMI. NIE WOLNO umieszczać foletika dzieciecego tylem do kierunku jazdy na przednim siedzeniu w przypadku zainstalowanej aktywnej poduszki powietrznej pasażera.
TR	ÖLÜM VEYA AĞIR ŞEKİLDE YARALANMAYA SEBEP OLABİLİR Yolcu airbağı aktif halde iken çocuk koltuğunu araç gidiş yönüne ters biçimde yerleştirmeyin.
DK	FARE FOR DØDELIGE KVÆSTELSER OG LIVSTRUENDE SKADER. Placer aldrig en bagudvendt barnestol på passagerersædet, hvis passager-airbagen er indstillet til at være aktiv (on).
EST	TAGAJÄRJEKS VÕIVAD OLLA TÕSISED KEHAVIGASTUSED VÕI SURM. Turvapadja olemasolu korral ärge asetage lapse turvaistet sõidusuunaga vastassuunas.
FIN	KUOLEMANVAARA TAI VAKAVIEN VAMMOJEN UHKA. Älä aseta lasten turvaistuinta niin, että lapsi on selkä menosuuntaan, kun matkustajan airbag on käytössä.
P	RISCO DE MORTE OU FERIMENTOS GRAVES. Não posicionar o banco para crianças numa posição contrária ao sentido de marcha quando o airbag de passageiro estiver activo.
LT	GALI IŠTIKTI MIRTIS ARBA GALITE RIMTAI SUSIŽEISTI. Nedėkite vaiko sėdynės atgręztos nugara į priekinį automobilio stiklą ten, kur yra veikiant keleivio oro pagalvė.
S	KAN VARA LIVSHOTANDE ELLER LEDA TILL ALLVARLIGA SKADOR. Placera aldrig en bakåtvänd barnstol i framsätet då passagerarsidans krockkudde är aktiv.
H	HALÁSOS VAGY SÚLYOS BALESET KÖVETKEZHET BE. Ne helyezzük a gyermekülést a menetiránnyal szembe, ha az utas oldalán légzsák működik.
LV	VAR IZRAISĪT NĀVI VAI NOPIETNAS TRAUMAS. Nenovietot mazuļa sēdekli pretēji braukšanas virzienam, ja pasažiera pusē ir uzstādīts gaisa spilvens.
CZ	HROZÍ NEBEZPEČÍ VÁŽNÉHO UBLÍŽENÍ NA ZDRAVÍ NEBO DOKONCE SMRTI. Neumísťujte dětskou sedačku do opačné polohy vůči směru jízdy v případě aktivního airbagu spolujezdce.
SLO	LAHKO PRIDE DO SMRTI ALI HUDIH POŠKODB. Otroškega avtomobilskega sedeža ne nameščajte v obratni smeri vožnje, če ima vozilo vgrajene zračne blazine za potnike.
RO	SE POATE PRODUCE DECESUL SAU LEZIUNI GRAVE. Nu aşezaţi scaunul de maşină pentru bebeluşi în poziţie contrară direcţiei de mers atunci când airbag-ul pasagerului este activat.
GR	ΜΠΟΡΕΙ ΝΑ ΠΡΟΚΛΗΘΟΥΝ ΘΑΝΑΤΟΣ Ή ΣΟΒΑΡΑ ΤΡΑΥΜΑΤΑ. Μην τοποθετείτε το καρεκλάκι αυτοκινήτου για παιδιά σε αντίθετη προς την φορά πορείας θέση σε περίπτωση που υπάρχει αερόσακος εν ενεργεία στη θέση συνεπιβάτη.
BG	ИМА ОПАСНОСТ ОТ СМЪРТ И СЕРИОЗНИ НАРАНЯВАНИЯ. Не поставяйте столчето за пренасяне на бебета в положение обратно на посоката на движение, при положение активно на въздушната възглавница за пътуване.
SK	MÔŽE NASTAŤ SMRŤ ALEBO VÁŽNE ZRANENIA Nedávajte autosedačku pre deti do polohy proti chodu vozidla, keď je aktívny airbag spolujazdca.
RUS	ВОЗМОЖНЫ ТРАВМЫ И ЛЕТАЛЬНЫЙ ИСХОД. Детское кресло, устанавливающееся против направления движения, нельзя монтировать на месте переднего пассажира, если последнее оборудовано активной подушкой безопасности.

fig. 115

F0Q0921

DRIVER SIDE KNEE BAG

(for versions/markets, where provided)

It is located in a special compartment under the dashboard and is protected by a dedicated cover fig. 116. It provides protection to the lower limbs in the event of frontal impact .

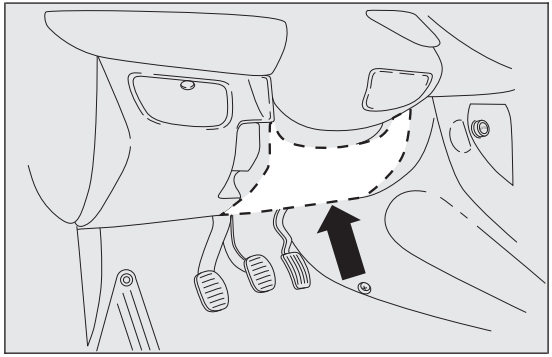

fig. 116 F0Q0702

Deactivation of passenger side airbags: front airbag and side bag for pelvis-chest-shoulder protection (for versions/markets, where provided)

If a child must be carried on the front seat in backward-facing child restraint system, deactivate the passenger side front airbag and front side bag for pelvis, chest and shoulder protection (for versions/markets, where provided).

With the airbags deactivated, the warning light switches on in the instrument panel.

IMPORTANT To deactivate the airbags see the description in the "Knowing your car" chapter, "Menu Options" paragraph.

SIDE AIRBAGS
(Side bag - Window bag)

The car is fitted with front side bags for driver and passenger, protecting the chest/pelvis, and window bags for protecting front and rear passengers' heads.

Side airbags protect occupants from side impacts of medium/high severity by placing the bag between the occupant and the internal parts of the side structure of the car.

Non-activation of side bags in other types of collisions (frontal impacts, rear shunts, roll-overs, etc...) is not an indication of system malfunction.

In the event of a side impact, an electronic control unit triggers the inflation of the bag if required. The cushion immediately inflates, placing itself between the occupant's body and structures that could cause injuries. Immediately after, the cushion deflates.

Side bags are not a replacement of, but rather a complement to, seat belts, which you are recommended to wear at all times, as specified by law in Europe and most non-European countries.

SIDE BAGS
(for versions/markets, where provided)

These comprise two types of bags located in the front seat backrests fig. 117 which protect the pelvis, chest and shoulder area of the occupants in the event of a side impact of medium/high severity.

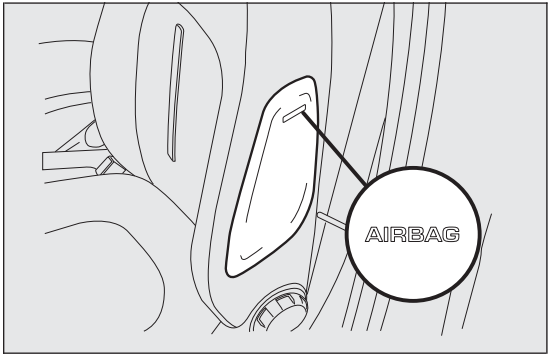

fig. 117 F0Q0701

WINDOW BAG

(for versions/markets, where provided)

This comprises a "curtain" bag housed behind the roof side linings and covered by special trims fig. 118.

It is designed to protect the head of front and rear occupants in the event of a side collision, thanks to the wide cushion inflation surface.

The deployment of side bags in the event of side impacts of low severity is not required.

In the event of a side impact, the system provides best protection if the passenger sits on the seat in a correct position, thus allowing correct window bag deployment.

For this reason, the seat belt must be worn at all times. In the case of side impacts, the seat belts hold occupants in the correct position and prevent them from being thrown out of the car by a very violent collision.

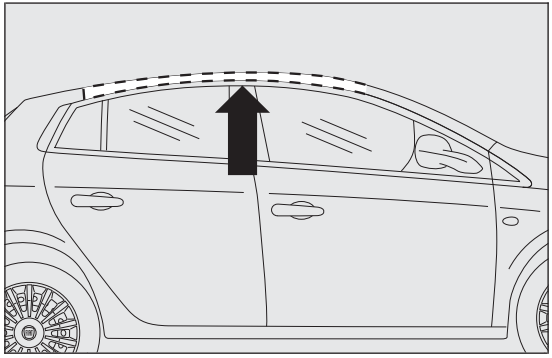

fig. 118 F0Q0703

Therefore, front side bags (for versions/markets, where provided) are not a replacement of, but complementary to, seat belts, which you are recommended to always wear, as specified by law in Europe and most non-European countries.

IMPORTANT Do not affix rigid objects to the garment hooks or support handles.

IMPORTANT Do not rest your head, arms or elbows on the door, on the windows and on the window bag area to avoid injuries during inflation.

IMPORTANT Never lean your head, arms or elbows out of the window.

IMPORTANT In the event of a side impact, the system provides best protection if the passenger sits on the seat in a correct position, thus allowing correct window bag deployment.

WARNING

Do not cover the backrest of the front seats with covers which are not suitable for use with side bags.

IMPORTANT

Do not wash the seats with water or pressurised steam (wash by hand or at automatic seat washing stations).

The front airbags and/or front side bags (for versions/markets, where provided) may be deployed if the car is subject to heavy collisions or accidents involving the underbody area, such as for example violent shocks against steps, kerbs or low obstacles, car falling into big holes or sags in the road.

When the airbag deploys it emits a small amount of dust: the dust is harmless and does not indicate the beginning of a fire. The dust may irritate the skin and eyes however: in this case, wash with neutral soap and water.

Airbag checking, repair and replacement must be carried out at a Fiat Dealership.

If the car is scrapped, have the airbag system deactivated at a Fiat Dealership.

Pretensioners and airbags are deployed according to different logics on the basis of the type of collision. Failure to deploy of one or more of the devices does not indicate a system malfunction.

WARNING

If the warning light does not switch on when the key is turned to MAR-ON, or stays on while driving (on some versions together with a message on the display) there may be a fault in the restraint systems. In this case, the airbags or the pretensioners may not be activated in the case of an accident or (in a lesser number of cases) they may be activated incorrectly. Contact your Fiat Dealership immediately to have this system checked.

WARNING

On cars with side bags, do not cover the front seat backrests with extra covers.

WARNING

Do not travel carrying objects in your lap, in front of your chest or between your lips (pipe, pencils, etc.): they could cause severe injury if the airbag is deployed in an accident.

WARNING

If the car has been stolen or in the case of attempt to steal it, if it has been subjected to vandalism or floods, have the airbag system checked by a Fiat Dealership.

WARNING

When the ignition key is inserted and turned to MAR-ON, airbags may be deployed if another car crashes into the vehicle, even if the engine is not running and the car is stationary. Therefore, even if the car is stationary, when an active passenger airbag is fitted, DO NOT install rearward facing child restraint systems on the front passenger seat. Deployment of the airbag following an impact could cause fatal injuries to the child. Therefore, always deactivate the passenger airbag when a rearward facing child restraint system is installed on the front passenger seat. The front passenger seat must also be positioned back as far as possible in order to avoid the child restraint system from coming into contact with the dashboard. Immediately reactivate the passenger airbag as soon as the child restraint system has been removed. Also remember that, if the key is turned to STOP, none of the safety devices (airbags or pretensioners) will be deployed in the event of collision. Non-deployment in such cases does not indicate a system malfunction.

WARNING

When the ignition key is turned to MAR-ON, the warning light (with passenger's front airbag activated) turns on and flashes for a few seconds to remind you that the passenger's airbag will be deployed in a crash, after which it should go off.

WARNING

The front airbag is designed to be deployed for impacts of a greater intensity than for the pretensioners. For impacts whose intensity falls between the two activation levels, it is normal for only the pretensioners to be activated.

WARNING

The airbag does not replace seat belts but increases their efficiency. Furthermore, since front airbags are not deployed in low-speed frontal impacts, side impacts, rear shunts or roll-overs, the passengers are protected only by the seat belts which must therefore be fastened at all times.

STARTING THE ENGINE

The car is fitted with an electronic engine lock device: if the engine fails to start, see the paragraph "The Fiat CODE system" in the section "Knowing your car".

Engine starting is guaranteed to -18°C (Italy and central Europe) and -20°C (Northern Europe).

We recommend that during the initial period you do not demand to full performance from the car (e.g. excessive acceleration, long journeys at top speed, sharp braking etc.).

When the engine is switched off never leave the key turned to MAR to prevent useless current absorption from draining the battery.

WARNING

It is dangerous to have the engine running indoors. The engine consumes oxygen and engine exhaust contains carbon dioxide, carbon monoxide and other toxic gasses.

WARNING

Remember that the brake servo and power steering are not operational until the engine has been started, therefore much effort than usual is required on the brake pedal and steering wheel.

STARTING PROCEDURE FOR DIESEL VERSIONS

Proceed as follows:

- ❒ engage the handbrake and place the gear lever in neutral;
- ❒ turn the ignition key to MAR: the warning lights and on the instrument panel will turn on;
- ❒ wait for the warning lights and to switch off;
- ❒ press the clutch pedal down to the floor without touching the accelerator;
- ❒ turn the ignition key to AVV as soon as warning light switches off. Waiting too long will waste the heating work carried out by the glow plugs. Release the key as soon as the engine starts.

IMPORTANT With cold engine, the accelerator must be entirely released when turning the ignition key to position AVV.

If the engine does not start at the first attempt, return the ignition key to STOP before attempting to start again.

If, when the ignition key is at MAR-ON the warning light remains lit, turn the key to STOP and then back to MAR-ON. If the warning light remains lit, try with the other keys provided with the car.

If you still cannot start the engine, contact a Fiat Dealership.

Warning light will flash for 60 seconds after starting or during prolonged cranking to indicate a fault with the glow plug heating system. You can use the car as usual if the engine starts but you should contact a Fiat Dealership as soon as possible.

When the engine is switched off never leave the key turned to MAR to prevent useless current absorption from draining the battery.

HOW TO WARM UP THE ENGINE AFTER IT HAS JUST STARTED

Proceed as follows:

❒ Drive off slowly, letting the engine turn at medium revs. Do not accelerate abruptly;

❒ Do not demand full performance at first. Wait until the engine coolant temperature gauge starts moving.

Never jump start the engine by pushing, towing or coasting downhill. This could cause fuel to flow into the catalytic converter and damage it beyond repair.

EMERGENCY START-UP

Contact a Fiat Dealership if instrument panel warning light (or the symbol on the display) stays on constantly.

STOPPING THE ENGINE

Turn the ignition key to STOP while the engine is idling.

IMPORTANT After a taxing drive, you should allow the engine to “catch its breath” before turning it off by letting it idle to allow the temperature in the engine compartment to fall.

A quick burst on the accelerator before stopping the engine serves no practical purpose; it wastes fuel and is especially damaging to turbocharged engines.

PARKING

Proceed as follows:

❒ stop the engine and engage the handbrake;

❒ engage a gear (on a slope, engage first gear if the car is facing uphill or reverse if it is facing downhill) and leave the wheels steered.

Block the wheels with a wedge or a stone if the car is parked on a steep slope.

Do not leave the key in the ignition switch to prevent the battery from running down.

WARNING

Never leave children unattended in the car. Always remove the key from the ignition when leaving the car and take it with you.

HANDBRAKE

The handbrake is located between the front seats.

To use the handbrake pull the lever upwards until the car cannot be moved.

Four or five clicks are generally enough when the car is on level ground while nine or ten may be required if the car is on a steep slope and laden.

IMPORTANT If this is not the case, contact a Fiat Dealership for adjustment.

When the handbrake is engaged and the ignition key is at MAR-ON, the (!) warning light will switch on in the instrument panel.

Proceed as follows to release the handbrake:

❒ slightly lift the handbrake and press release button A fig. 119;

❒ keep button A pressed and lower the lever. The (!) warning light in the instrument panel will switch off.

Press the brake pedal when carrying out this operation to prevent the car from moving accidentally.

IMPORTANT For cars equipped with a front armrest, lift this up to ensure that it does not interfere with the action of the handbrake.

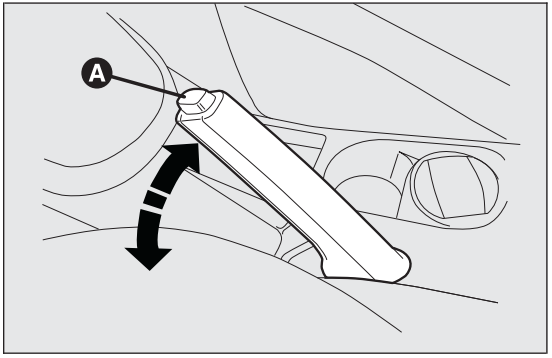

fig. 119 F0Q0628

USING THE GEARBOX

To engage the gears, press the clutch pedal fully and shift the gear lever into one of the required positions (the diagram for gear engagement is shown on the knob fig. 120 fig. 121).

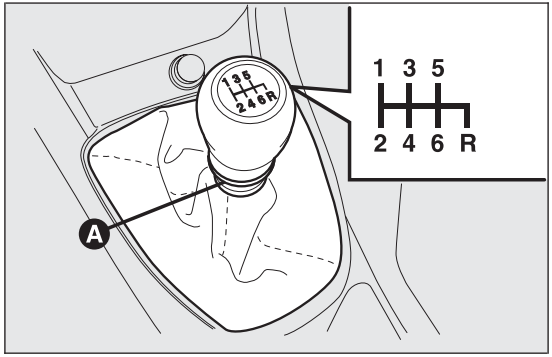

fig. 120 - 1.6 MultiJet versions F0Q0734

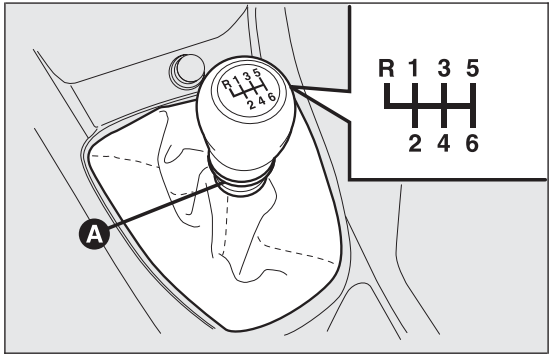

fig. 121 - 2.0 MultiJet versions (where provided) F0Q0783

To engage 6th gear, operate the lever by pressing it towards the right in order to avoid engaging 4th gear by mistake. The same applies to the shift from 6th to 5th gear.

To engage reverse R from neutral, lift sliding ring A and, at the same time:

❒ move the lever to the right and then backwards (1.6 MultiJet versions) fig. 120;

or

❒ move the lever to the left and then forwards (2.0 MultiJet versions - for versions/markets, where provided) fig. 121.

IMPORTANT Reverse can only be engaged when the car is completely stationary. With the engine running, wait for at least 2 seconds with the clutch pedal fully pressed before engaging reverse to prevent damage to the gears and grating.

IMPORTANT The clutch pedal should be used only for gear changes. Do not drive with your foot resting on the clutch pedal, however lightly. For versions/markets where provided, the electronic clutch pedal control could cut in, interpreting the incorrect driving style as a fault.

WARNING

Depress the clutch pedal fully to change gear correctly. It is therefore essential that there is nothing under the pedals: make sure the mats are lying flat and do not get in the way of the pedals.

Do not drive with your hand resting on the gear lever as the force exerted, even if slight, could lead over time to premature wear of the gearbox internal components.

SAVING FUEL

Some useful tips are given below for fuel saving and reducing harmful emissions of CO_2 and other pollutants [nitrogen oxides, unburnt hydrocarbons, Particulate Matter (PM) etc.].

GENERAL CONSIDERATIONS

The general factors that affect fuel consumption are listed below.

Car maintenance

Have checks and adjustments carried out in accordance with the "Scheduled Servicing Plan".

Tyres

Check the tyre pressures at least once every four weeks: if the pressure is too low, consumption levels increase as resistance to rolling is higher.

Unnecessary loads

Do not travel with an overloaded boot. The weight of the car (especially when driving in town) and its ride greatly affects consumption and stability.

Roof rack/ski rack

Remove the roof rack or the ski rack from the roof after use. These accessories lower aerodynamic penetration and adversely affect consumption levels. When transporting particularly large objects, use a trailer if possible.

Electric devices

Use electrical devices only for the amount of time necessary. The heated rear window, additional headlights, windscreen/rear window wipers and heater fan need a considerable amount of energy, therefore increasing fuel consumption (by up to 25% in the urban cycle).

Climate control system

Air conditioning leads to higher fuel consumption (on average up to +20%). If the temperature outside permits, try and use the air vents.

Spoilers

The use of non-certified spoilers may adversely affect air drag and fuel consumption.

DRIVING STYLE

The main driving styles that affect fuel consumption are listed below.

Starting

Do not warm the engine with the car at a standstill or at idle or high speed: under these conditions the engine warms up much more slowly, increasing electrical consumption and emissions. It is therefore advisable to move off immediately, slowly, avoiding high speeds: in this way the engine will warm faster.

Unnecessary actions

Avoid accelerating when starting at traffic lights or before switching off the engine. This and also double declutching is absolutely pointless on modern cars and also increases consumption and pollution.

Gear selection

As soon as the conditions of the traffic and road allow, use a higher gear. Using a low gear for faster acceleration will increase consumption.

In the same way improper use of a high gear increases consumption, emissions an engine wear.

Max. speed

Fuel consumption increases considerably with speed. Maintain a constant speed, avoiding unnecessary braking and acceleration, which cost in terms of both fuel consumption and emissions.

Acceleration

Accelerating violently severely affects consumption and emissions: acceleration should be gradual and should not exceed the maximum torque.

USAGE CONDITIONS

The main usage conditions that negatively affect fuel consumption are listed below.

Cold starting

Short journeys and frequent cold starts do not allow the engine to reach optimum operating temperature. This results in a significant increase in consumption levels (from +15 to +30% on the urban cycle) and emissions.

Traffic and road conditions

Rather high consumption levels are linked to situations with heavy traffic, for instance when travelling in queues with frequent use of the lower gears or in cities with many traffic lights. Winding mountain roads and rough road surfaces also adversely affect consumption.

Traffic hold-ups

During prolonged hold-ups (e.g. level crossings) the engine should be switched off.

TOWING TRAILERS

IMPORTANT NOTES

For towing caravans or trailers the car must be fitted with a certified tow hook and an adequate electric system. Installation should be carried out by specialised personnel who will issue the required papers for travelling on roads.

Install any specific and/or additional rear view mirrors as specified by the Highway Code.

Remember that when towing a trailer, steep hills are harder to climb, braking distances increase and overtaking takes longer depending on the overall weight.

Engage a low gear when driving downhill, rather than constantly using the brake.

The weight the trailer exerts on the car tow hook reduces the car's loading capacity by the same amount. To make sure that the maximum towable weight is not exceeded (given in the car registration document) account should be taken of the fully laden trailer, including accessories and luggage.

Respect the speed limits specific to each country for vehicles towing trailers.

In any case, the maximum speed must not exceed 80 km/h.

WARNING

The ABS with which the car may be equipped will not control the braking system of the trailer. Particular caution is required on slippery roads.

WARNING

Never modify the braking system of the car to control the trailer brake. The trailer braking system must be fully independent of the car's hydraulic system.

INSTALLING THE TOW HOOK

The towing device should be fastened to the bodywork by specialised personnel according to any additional and/or integrative information supplied by the Manufacturer of the device. The towing device must meet current regulations with reference to Directive 94/20/EEC and subsequent amendments. For any version the towing device used must be right for the towable weight of the car on which it is to be installed.

IMPORTANT The use of auxiliary loads other than external lights (electric brake, winch, etc.) must be used with engine running.

For the electric connection a unified connector should be used, which is generally placed on a special bracket fastened to the towing device, and a special ECU should be installed on the car to control the trailer's exterior lights.

7 or 13-pole 12 V DC connections should be used (CUNA/UNI and ISO/DIN Standards). Follow any instructions provided by the car manufacturer and/or the towing device manufacturer.

An electric brake or winch should be powered directly by the battery through a cable with a cross-section of no less than 2.5 mm^2.

IMPORTANT Electric brakes or other devices must be used with engine running.

In addition to the electrical branches, the vehicle's electrical system can be connected only to the supply cable for an electric brake and to the cable for an internal trailer light, though not more than 15 W. For connections use the preset control unit with battery cable no less than 2.5 mm^2.

SNOW TYRES

Use snow tyres of the same size as the normal tyres provided with the car.

A Fiat Dealership will be happy to provide advice concerning the most suitable type of tyre for the customer's requirements.

For the type of tyre to be used, inflation pressures and the specifications of snow tyres, follow the instructions given in paragraph "Wheels" in section "Technical specifications".

The winter features of these tyres are reduced considerably when the tread depth is below 4 mm. Replace them in this case.

Due to snow tyre features, under normal conditions of use or on long motorway journeys, the performance of these tyres is much lower than that of standard tyres. Their usage should therefore be restricted in accordance with their type approval.

IMPORTANT When using snow tyres with a maximum speed index below the one that can be reached by the car (increased by 5%), place a notice in the passenger compartment, plainly in view, which states the maximum speed allowed by the snow tyres (as per EC Directive).

All four tyres should be the same (brand and track) to ensure greater safety when driving and braking and better driveability.

Remember that you should not change the rotation direction of the tyres.

WARNING

The maximum speed for snow tyres marked "Q" is 160 km/h, while it is 190 km/h for "T" tyres and 210 km/h for "H" tyres. You should, however, always stick to the speed limits of the Road Traffic Code.

SNOW CHAINS

The use of snow chains should be in compliance with local regulations.

Snow chains may be fitted to the tyres of the front wheels (drive wheels) only.

Check the tension of the snow chains after the first few metres have been driven.

Use reduced size snow chains:

❒ for 205/55 R16" tyres, use reduced size snow chains with a maximum projection of 9 mm beyond the tyre profile;

❒ for 225/45 R17" tyres, use reduced size snow chains with a maximum projection of 7 mm beyond the tyre profile.

IMPORTANT 225/40 R18 92V tyres cannot be fitted with chains. Snow chains may cause interference with the surrounding elements.

IMPORTANT Snow chains cannot be fitted to the space-saver wheel. If a front tyre is punctured, replace a rear wheel with the space-saver wheel and move the rear wheel to the front axle. In this way, with two normal drive wheels at the front, snow chains can be fitted.

Keep your speed down when snow chains are fitted; do not exceed 50 km/h. Avoid potholes, steps and pavements and avoid driving for long distances on roads not covered with snow to prevent damaging the car and the roadbed.

CAR INACTIVITY

If the car is to be left inactive for longer than a month, the following precautions should be observed:

- ❒ park the car in covered, dry and if possible well-ventilated premises and slightly open the windows;
- ❒ engage a gear and disengage the handbrake;
- ❒ disconnect the negative battery terminal and check charge (see paragraph “Battery - Charge and electrolyte level check” in chapter “Maintenance and care”);
- ❒ clean and protect the painted parts using protective wax;
- ❒ clean and protect the shiny metal parts using special compounds available commercially;
- ❒ sprinkle talcum powder on the rubber windscreen and rear window wiper blades and lift them off the glass;
- ❒ cover the car with a cloth or perforated plastic sheet. Do not use sheets of non-perforated plastic as they do not allow moisture on the car body to evaporate;
- ❒ inflate tyres to +0.5 bar above the standard specified pressure and check it at intervals;
- ❒ do not drain the engine cooling system.

IMPORTANT Where relevant, switch off the car alarm with the remote control.

GETTING TO KNOW YOUR CAR
SAFETY
STARTING AND DRIVING
WARNING LIGHTS AND MESSAGES
IN AN EMERGENCY
SERVICING AND MAINTENANCE
TECHNICAL SPECIFICATIONS
INDEX

WARNING LIGHTS AND MESSAGES

GENERAL WARNINGS

Warning lights are accompanied by a specific message and/or acoustic warning where provided by the control panel. These indications are **concise and precautionary** and, as such, must not be considered as exhaustive and/or an alternative to the information contained in this Owner Handbook, which you are advised to read carefully in all cases. In the event of a failure indication, **always refer to the contents of this chapter**.

IMPORTANT Failure indications displayed are divided into two categories: **very serious** and **less serious** failures.

Very serious failures are indicated by a repeated and prolonged warning "cycle".

Less serious failures are indicated by a shorter warning "cycle".

The display cycle of both failure types can be stopped by pressing the **MODE** button. The warning light (or symbol in the display) will remain on until the cause of the malfunction is eliminated.

BRAKE FLUID LOW (red) / HANDBRAKE ENGAGED (red)

Turning the key to the MAR-ON position the warning light switches on, but it should switch off after a few seconds.

LOW BRAKE FLUID LEVEL

The warning light switches on when the level of the brake fluid in the reservoir falls below the minimum level due to a possible leak in the circuit. On some versions the display shows the dedicated message.

WARNING

If the (!) warning light switches on while driving, stop immediately and contact a Fiat Dealership.

HANDBRAKE APPLIED

The warning light turns on when the handbrake is applied. If the car is moving the buzzer will also sound.

IMPORTANT If the warning light comes on when the car is in motion, check that the handbrake is not on.

BRAKE PAD WEAR (amber)

The warning light switches on if the front brake pads are worn. In this case replace them as soon as possible.

The display will show the dedicated message.

IMPORTANT Because the car is equipped with a wear detection system only for the front brake pads, when these are replaced the rear brake pads should also be checked for wear.

AIRBAG FAILURE (red)

Turning the key to the MAR-ON position the warning light switches on, but it should switch off after a few seconds. The warning light stays on constantly if there is a failure in the airbag system.

WARNING

If when turning the key to MAR-ON the warning light does not turn on or stays on whilst driving, a failure may have occurred in the restraint systems. In this case the airbags or pretensioners may not be deployed in an impact or, in a lower number of cases, they may be deployed accidentally. Contact a Fiat Dealership immediately to have the system checked.

WARNING

A fault with the warning light is indicated by flashing of the warning light, which signals the deactivation of the passenger side front airbag. In addition, the airbag system automatically disables the airbags on the passenger's side (both front and side airbags for versions/markets, where provided). In this case, the warning light may not indicate a fault in the restraint systems. Before continuing, contact a Fiat Dealership immediately to have the system checked.

PASSENGER/SIDE AIRBAGS DEACTIVATED (amber)

The warning light switches on when the front passenger's airbag and side bag are disabled. With front passenger airbag on, when the ignition key is turned to MAR-ON, the warning light switches on constantly for several seconds, it flashes for another few seconds and then it should switch off.

WARNING

A failure of the warning light is indicated by warning light switching on. In addition, the airbag system automatically disables the airbags on the passenger's side (both front and side airbags where provided). Before continuing, contact a Fiat Dealership immediately to have the system checked.

UNFASTENED SEAT BELTS (red)

The warning light switches on constantly with the car stationary and the driver's side or passenger side seat belt (when the passenger is present) not fastened.

The warning light will flash and a buzzer will sound if the car is in motion and the front seat belts are not correctly fastened.

The SBR (Seat Belt Reminder) system buzzer can only be permanently switched off by a Fiat Dealership.

The system can be reactivated using the Setup Menu.

LOW BATTERY CHARGE (red)

The warning light comes on when the ignition key is turned to MAR-ON, but it should go out as soon as the engine has started (with the engine running at idle speed a brief delay before going out is acceptable).

If the warning light stays on constantly or continues to flash, contact a Fiat Dealership immediately.

CONTINUOUSLY ON: LOW ENGINE OIL PRESSURE (red)

ON FLASHING: ENGINE OIL DETERIORATED

(only MultiJet versions with DPF - red)

When the ignition key is turned to MAR-ON, the warning light switches on but should switch off as soon as the engine is started.

Low engine oil pressure

The warning light switches on constantly together (for versions/markets, where provided) with a message on the display when the system detects that the engine oil pressure is too low.

WARNING

If the warning light turns on when the car is travelling (on certain versions together with the message on the display) stop the engine immediately and contact a Fiat Dealership.

Engine oil degraded
(versions with DPF only)

The warning light will flash and a specific message will appear on the display (for versions/markets, where provided). The warning light may flash in the following ways, depending on the version:

❒ for 1 minute every two hours;

❒ cycles of 3 minutes with intervals with the warning light off for 5 seconds until the oil is changed.

After the first indication, at each engine start-up the warning light will continue flashing as described above until the oil is changed. The display (for versions/markets, where provided), shows a dedicated message together with the warning light.

The flashing of this warning light should not be considered as a fault; it informs the customer that the oil needs to be changed following normal car use.

Note that engine oil degrades faster under the following circumstances:

❒ mainly town use of the car which makes the DPF regeneration process more frequent;

❒ use of the car for short drives, in which the engine does not have time to reach its regular operating temperature;

❒ repeated interruption of the regeneration process, signalled by the DPF warning light coming on.

WARNING

If the warning light switches on, the deteriorated engine oil must be changed as soon as possible, and never more than 500 km from the first time that the warning light switches on. Failure to observe the above indication may result in severe damage to the engine and invalidate the warranty. Remember that the operation of this warning light is not related to the amount of oil in the engine. Therefore, never top up with oil when the warning light starts flashing.

"DUALDRIVE" ELECTRIC POWER STEERING FAILURE (red)

The warning light comes on when the ignition key is turned to MAR-ON, but it should switch off after a few seconds.

The electric power steering system will not work when the warning light is on and considerably more effort is needed on the steering wheel. The car can still be steered. In this case, contact a Fiat Dealership.

The display will show the dedicated message.

"DUALDRIVE" ELECTRIC POWER STEERING ACTIVATION (indication on display)

The indication CITY switches on when the "Dualdrive" electric power steering system is activated by pressing the button on the dashboard.

The indication CITY will switch off when the button is pressed again.

EXCESSIVE ENGINE COOLANT TEMPERATURE (red)

Turning the key to the MAR-ON position the warning light switches on, but it should switch off after a few seconds. The warning light turns on when the engine is overheated. If the warning light comes on, proceed as follows:

- ❒ **when driving normally:** stop the car, switch off the engine and check that the water level in the reservoir is not below the MIN mark. If it is, wait for the engine to cool down, then slowly and carefully open the cap, top up with coolant and check that the level is between the MIN and MAX marks on the reservoir. Also check visually for any fluid leaks. If, when restarting, the warning light switches on again, contact a Fiat Dealership.
- ❒ **If the car is used under demanding conditions** (e.g. towing trailers uphill or fully loaded): slow down and, if the light stays on, stop the car. Wait for 2 or 3 minutes with the engine running and slightly accelerated to further favour the coolant circulation. Then stop the engine. Check the correct coolant level as described above.

IMPORTANT Over demanding routes, it is advisable to keep the engine on and slightly accelerated for a few minutes before switching it off.

The display will show the dedicated message.

INCOMPLETE DOOR LOCKING (red)

The warning light switches on when one or more doors are not completely shut. An acoustic signal is activated with the doors open and the car moving.

GENERIC FAILURE INDICATION (amber)

Fuel cut-off inertia switch tripped

The warning light comes on when the inertial fuel cut-off switch is triggered. The display shows the dedicated message.

Engine oil pressure sensor failure

The warning light comes on when the engine oil pressure sensor is faulty.

Dusk sensor failure

This warning light comes on when a dusk sensor fault is detected. The display shows the dedicated message.

Preset speed limit exceeded (for Arab countries only)

The warning light switches on when the vehicle speed exceeds 120 km/h.

Rain sensor failure

The warning light switches on when a rain sensor fault is detected. The display shows the dedicated message.

Parking sensor failure
(for versions/markets, where provided)

The warning light turns on when failure is detected in the parking sensors.

Tyre pressure monitoring system failure
(for versions/markets, where provided)

The warning light turns on when a failure is detected in the TPMS (for versions/markets where provided). Should one or more wheels without a sensor be fitted, the instrument panel warning light will come on and stay on until the initial conditions are restored. The display shows the dedicated message.

Note If one of the above mentioned failures occurs, contact a Fiat Dealership as soon as possible.

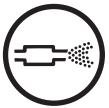

DPF (DIESEL PARTICULATE FILTER) CLEANING IN PROGRESS (only versions with DPF) (amber)

When the key is turned to MAR-ON, the warning light switches on but should switch off after a few seconds. The warning light (together with a message and a symbol on the display on some versions) switches on constantly to notify the driver that the DPF system needs to eliminate captured pollutants (particulate) through the regeneration process.

The warning light does not switch on during every DPF regeneration, but only when driving conditions require that the driver is notified. To switch the warning light off, the car must be kept moving until the regeneration process is completed.

On average, the process lasts fifteen minutes. The best conditions to complete the regeneration process are reached driving the car at about 60 km/h with engine speed over 2000 rpm.

If this light switches on, it does not mean that the car is defective, so there is no need to take it to a workshop. On some versions, together with the warning light switching on, the display shows a dedicated message.

WARNING

The driving speed must always be suitable for traffic and weather conditions and the driver must always comply with the Highway Code. The engine may be switched off even if the DPF warning light is on: repeated interruptions of the regeneration process could cause an early deterioration of engine oil. For this reason it is always advisable to wait for the light to go off before turning off the engine, following the instructions above. It is not a good idea to complete DPF regeneration with the car stationary.

FUEL RESERVE (amber)

Turning the key to the MAR-ON position the warning light switches on, but it should switch off after a few seconds. The warning light turns on when 8-10 litres of fuel are left in the tank.

IMPORTANT The warning light will flash to indicate a system failure. If this is the case, go to the Fiat Dealership to have the system checked.

EOBD/INJECTION SYSTEM FAILURE (amber)

In normal conditions, when the ignition key is turned to MAR-ON the warning light switches on, but should switch off as soon as the engine is started.

If the warning light remains on or comes on whilst driving, it means that the injection system is not working properly; in particular, if the warning light comes on constantly, this indicates a malfunction in the supply/ignition system that could cause excessive exhaust emissions, a possible loss of performance, poor driveability and high fuel consumption.

The display will show the dedicated message.

Under these conditions, you may continue travelling at moderate speed without demanding excessive effort from the engine. Prolonged use of the car with the warning light on may cause damage: contact a Fiat Dealership as soon as possible.

The warning light goes out after the fault disappears, but the notification is stored in the system.

Contact a Fiat Dealership as soon as possible if the warning light either does not switch on when the key is turned to MAR-ON or if while driving the warning light switches on either constantly or flashes (along with a message and a symbol on the display on some versions). The operation of warning light may be checked by the traffic police using specific devices. Comply with the laws and regulations of the country where you are driving.

ESP SYSTEM/HILL HOLDER FAILURE (amber)

ESP system

Turning the key to the MAR-ON position the warning light switches on, but it should switch off after a few seconds.

If the warning light does not go off or stays on together with the LED on the ASR button when travelling, contact a Fiat Dealership.

On some versions, the display shows the dedicated message.

Flashing of the warning light while driving indicates the intervention of the ESP system.

Hill Holder failure

It is indicated by the warning light switching on.

On some versions, the display shows the dedicated message.

GLOW PLUG PREHEATING/GLOW PLUG PREHEATING FAILURE (MultiJet versions - amber)

GLOW PLUG PREHEATING

The warning light switches on when the key is turned to MAR-ON and switches off when the plugs have reached the preset temperature. Start the engine as soon as the warning light switches off.

IMPORTANT At moderate or high ambient temperatures the warning light may stay on for an extremely short time.

GLOW PLUG PREHEATING FAILURE

The warning light flashes if there is a fault in the preheating system. Contact a Fiat Dealership to have the fault fixed as soon as possible.The display will show the dedicated message.

WATER IN DIESEL FILTER (amber)

Turning the key to the MAR-ON position the warning light switches on, but it should switch off after a few seconds.

The warning light comes on when there is water in the diesel filter.

The display will show the dedicated message.

The presence of water in the fuel system circuit may cause severe damage to the injection system and irregular engine operation. If the warning light switches on (on some versions together with the dedicated message on the display), contact a Fiat Dealership as soon as possible to have the system bled. Water may have entered the tank if this appears immediately after refuelling: if this happens, switch the engine off immediately and contact a Fiat Dealership.

ABS SYSTEM FAILURE (amber)

Turning the key to the MAR-ON position the warning light switches on, but it should switch off after a few seconds.

The warning light will switch on when the system is either not working or not available.

Under these circumstances, the braking system will work as normal but without the extra performance offered by the ABS system.

Drive carefully and contact a Fiat Dealership as soon as possible.

The display will show the dedicated message.

EBD FAILURE (red) (amber)

If warning lights (!) and (ABS) are lit up at the same time with the engine running, this indicates an EBD system failure or that the system is not available. Early locking of the rear wheels may occur in the event of violent braking, causing the car to swerve. Drive very carefully to the nearest Fiat Dealership to have the system inspected immediately. The display shows the dedicated message.

FIAT CODE SYSTEM FAILURE / ALARM FAILURE / BREAK-IN ATTEMPT (amber)

Fiat CODE system failure

When the key is turned to MAR-ON the warning light will flash only once and then go off. If, with the ignition key at MAR-ON, the warning light stays on constantly, this indicates a possible failure (see "Fiat CODE system" in the "Knowing your car" section).

The display will show the dedicated message.

IMPORTANT Warning lights and (or the symbol on the display) will switch on at the same time to indicate a Fiat CODE system failure

If with the engine running the warning light flashes, this means that the car is not protected by the engine inhibitor device (see "Fiat CODE system" in the "Knowing your car" section). In this case, contact a Fiat Dealership to have all the keys stored in the memory.

Alarm failure

(for versions/markets, where provided)

A fault in the alarm system is signalled by this warning light switching on. Contact a Fiat Dealership as soon as possible.

The display will show the dedicated message.

Break-in attempt

This warning light switches on when a break-in attempt is detected. Contact a Fiat Dealership as soon as possible.

The display will show the dedicated message.

INSUFFICIENT TYRE PRESSURE (amber-red) / CHECK TYRE PRESSURE (amber) / TYRE PRESSURE UNSUITABLE FOR SPEED (amber)

(for versions/markets, where provided)

This warning light switches on when the ignition key is turned to MAR-ON, but it should switch off after a few seconds.

Insufficient tyre pressure

The warning light switches on when the pressure of one or more tyres falls below a preset level. In this way the TPMS warns the driver that one or more tyres may be dangerously flat and liable to puncture.

IMPORTANT Do not continue driving with one or more flat tyres as handling may be compromised. Stop the car, avoiding harsh braking and steering manoeuvres. Replace the wheel immediately with the space-saver wheel (for versions/markets, where provided) or carry out a repair using the dedicated kit (see “Changing a wheel” in the "In an emergency" chapter) and contact a Fiat Dealership as soon as possible.

Check tyre pressure

This warning light switches on in the instrument panel to indicate that the tyre pressure is below the value recommended to guarantee long tyre life and low fuel consumption. It may also indicate a slow loss of pressure.

Should two or more tyres be flat, the display will show the indications corresponding to each tyre in sequence.

Restore correct tyre pressures as soon as possible (see “Cold tyre pressures” in the “Technical specifications” chapter).

Tyre pressure unsuitable for speed

Should you need to travel at a speed higher than 160 km/h, inflate the tyres to the pressures specified in “Tyre pressures” paragraph.

If the TPMS system (for versions/markets where provided) detects that the pressure of one or more tyres is unsuitable for the current speed, the warning light will turn on (together with the message on the display) (see “Tyre pressure low” in this chapter) and it will stay on until the car slows down to a speed below the preset threshold.

IMPORTANT In this case slow down immediately since tyre overheating could impair tyre performance and life beyond repair, and even make the tyre to blow-out.

WARNING

Particularly strong radio frequency interference may cause the TPMS to function incorrectly. This condition is indicated to the driver by a message (for versions/markets where provided). The message will disappear automatically as soon as the interference ceases to affect the system.

EXTERNAL LIGHT FAILURE (amber)

The warning light switches on when a fault is detected on one of the following lights:

❒ side lights

❒ brake (stop) lights or corresponding fuse (see the description provided for this symbol STOP).

❒ rear fog lights

❒ direction indicators

❒ number plate lights.

The failure relating to these lights could be: one or more blown bulbs, a blown protection fuse or a break in the electrical connection.

The display will show the dedicated message.

REAR FOG LIGHTS (amber)

The warning light switches on when the rear fog lights are activated.

FRONT FOG LIGHTS (green)

The warning light comes on when the front fog lights are turned on.

LEFT-HAND DIRECTION INDICATOR (green) (intermittent)

The warning light comes on when the direction indicator control stalk is moved downwards or, together with the right-hand direction indicator, when the hazard warning light button is pressed.

RIGHT-HAND DIRECTION INDICATOR (green) (intermittent)

The warning light switches on when the direction indicator control stalk is moved upwards or, together with the left direction indicator, when the hazard warning light button is pressed.

SIDE LIGHTS AND DIPPED HEADLIGHTS (green)/FOLLOW ME HOME (green)

SIDE LIGHTS AND DIPPED HEADLIGHTS

The warning light switches on when side lights or dipped headlights are activated.

FOLLOW ME HOME

This warning light switches on (on some versions together with a message and a symbol in the display) when this device is used (see the "Follow Me Home" paragraph in the "Knowing your car" chapter).

The display will show the dedicated message.

MAIN BEAM HEADLIGHTS (blue)

The warning light switches on when the main beam headlights are turned on.

CRUISE CONTROL (green) (for versions/markets, where provided)

Turning the key to the MAR-ON position the warning light switches on, but it should switch off after a few seconds.

The warning light switches on when the Cruise Control ring nut is turned to ON.

The display will show the dedicated message.

POSSIBLE ICE ON ROAD

The outside temperature indicator starts flashing when the outside temperature reaches or falls below 3°C and the ❄ symbol lights up on the display to warn the driver of the possible presence of ice on the road.

The display will show the dedicated message.

LIMITED RANGE

The display will show the dedicated message to warn the driver that the cruising range is less than 50 km (or the equivalent in miles).

ASR SYSTEM

The ASR system can be deactivated by pressing the ASR OFF button. The display will show a specific message to warn the driver that the system is off; at the same time, the button LED will turn on.

When you press the ASR OFF button again, the LED will turn off and the display will show a dedicated message to inform you that the system is on again.

SPEED LIMIT EXCEEDED

The display shows the dedicated message when the car exceeds the set speed limit.

ENGAGEMENT OF SPORT FUNCTION

The S indication appears on the display when the corresponding function is activated by pressing the relevant control button on the dashboard.

If the button is pressed again the S indication goes out.

STARTING THE ENGINE

Contact a Fiat Dealership immediately if instrument panel warning light stays on constantly.

JUMP STARTING

If the battery is flat, the engine may be started using an auxiliary battery with the same capacity or a little higher than the flat one.

Proceed as follows to start the car:

❒ connect the positive terminals (sign + near the terminal) of the two batteries with a jump lead fig. 122

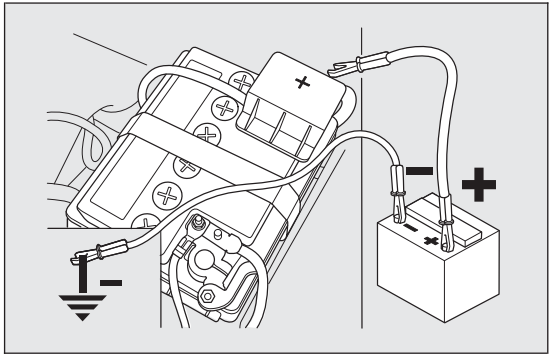

fig. 122 F0Q0765

❒ with a second lead, connect the negative terminal – of the auxiliary battery to an earth point on the engine or the gearbox of the car to be started;

❒ start the engine;

❒ when the engine has been started, remove the leads reversing the order above.

If after a few attempts the engine does not start, do not persist but contact a Fiat Dealership.

IMPORTANT Do not directly connect the negative terminals of the two batteries: sparks could ignite explosive gas released from the battery. If the auxiliary battery is installed on another car, prevent accidental contact between metallic parts of the two cars.

Never use a fast battery-charger to start the engine as this could damage the electronic systems of your car, particularly the ignition and fuel supply control units.

WARNING

This procedure must be performed by expert personnel because incorrect actions could cause electrical discharge of considerable intensity. Furthermore, battery fluid is poisonous and corrosive: avoid contact with skin and eyes. Keep naked flames and lighted cigarettes away from the battery and do not cause sparks.

BUMP STARTING

Never bump start the engine by pushing, towing or coasting downhill.

IMPORTANT Remember that the brake servo and electrical power steering system are not active until the engine is started. A much greater effort will therefore be required to use the brake pedal or turn the steering wheel.

CHANGING A WHEEL

GENERAL INSTRUCTIONS

The car is equipped with the “Fix&Go Automatic Kit”: see paragraph “Fix&Go Automatic Kit” for instructions on how to use this device. As an alternative to the “Fix&Go Automatic Kit” the car may be equipped with a space-saver wheel: see the instructions on the following pages for changing the wheel.

WARNING

The space-saver wheel (for versions/ markets, where provided) is specific to your car, do not use it on other models, or use the space-saver wheel of other models on your car. The space-saver wheel must only be used in case of emergency. It must only be used for the distance necessary to reach a service point and the car speed must not exceed 80 km/h. The space-saver wheel has an orange sticker that summarises the main cautions for use and limitations. Never remove or cover the sticker. The following information is provided in four languages on the sticker: "Important! For temporary use only! 80 km/h max.! Replace with a standard wheel as soon as possible. Never cover this indication". Never apply a hub cap on a space-saver wheel.

WARNING

Alert other drivers that the car is stationary in compliance with local regulations: hazard warning lights, warning triangle, etc. Any passengers on board should leave the car, especially if it is heavily laden. Passengers should stay away from on-coming traffic while the wheel is being changed. On hills or uneven roads, use chocks or appropriate objects to block the wheels of the car.

WARNING

The car's driving characteristics will be modified with the space-saver wheel fitted. Avoid sudden starting or stopping, sharp or fast turns. The total life of a space-saver wheel is approximately 3000 km, after which it must be replaced by another wheel of the same type. Never install a traditional tyre on a rim designed to be used as a space-saver wheel. Have the tyre repaired and refitted as soon as possible. Using two or more space-saver wheels at the same time is forbidden. Do not grease the threads of bolts before fitting them: they might slip out.

WARNING

The jack provided is only intended to be used for replacing wheels on the car with which it is supplied, or on same-model vehicles. Never use the jack for other purposes, such as lifting other car models. Never use it for repair operations under the car. Incorrectly positioning the jack may cause the car to fall. Do not use the jack for loads higher than the one shown on its label. Never install snow chains on the space-saver wheel; if a front tyre (driving wheel) is punctured and you need to use snow chains, use a standard wheel from the rear axle and install the space-saver wheel on the rear axle. In this way, with two normal drive wheels, it is possible to use snow chains.

WARNING

Fit the hub cap correctly to prevent it from coming free in motion. Never tamper with the inflating valve. Never introduce tools of any kind between rim and tyre. Check tyre and space-saver wheel pressures regularly, referring to the values shown in the "Technical data" chapter.

JACK

Please note that:

❒ the jack weight is 1.76 kg;

❒ the jack requires no adjustment;

❒ the jack cannot be repaired and in the event of a fault it must be replaced by another original one;

❒ no tool other than its cranking device may be fitted on the jack.

To change a wheel proceed as follows:

❒ stop the car in a position that is not dangerous for on-coming traffic where you can change the wheel safely. the ground must be flat and sufficiently compact;

❒ turn the engine off and pull up the handbrake; engage first gear or reverse; use handle A to remove the rigid preformed cover B fig. 123;

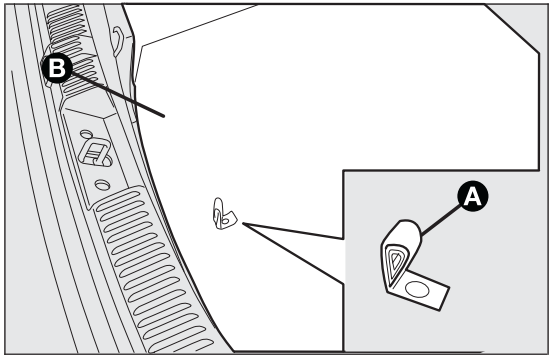

fig. 123 F0Q0732

❒ loosen fastener E fig. 124;

❒ for versions equipped with the “Fix&Go Automatic” kit, take the tool box from the luggage compartment;

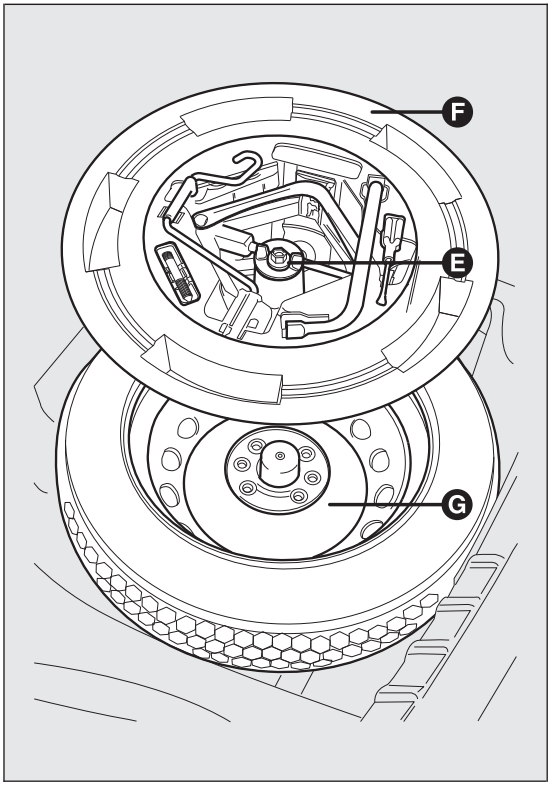

fig. 124 F0Q0392

❒ for versions equipped with space-saver wheel, loosen fastener E fig. 124, take tool box F, position it near the wheel to be changed and then take space-saver wheel G;

❒ remove hub cap H fig. 125 (versions with steel rims) or remove the hub cap (versions with alloy rims);

❒ loosen the bolts of the wheel to be replaced by about one turn with the wrench provided L fig. 126; if you have alloy rims, rock the car to make it easier to separate the rim from the wheel hub;

❒ operate device M fig. 127 so as to extend the jack, until groove N on the upper part of the jack fits correctly into the lower profile P visible on the car body next to the indication Q (at approx. 72 cm from the centre of the front wheel or 75 cm from the centre of the rear wheel);

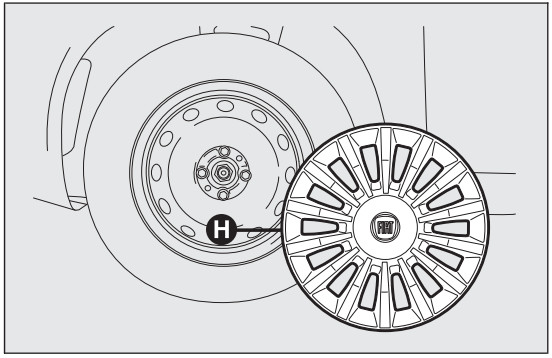

fig. 125 F0Q0393

❒ alert any bystander that the car is about to be raised; all persons should be kept away from the car and nobody must touch it until it has been lowered;

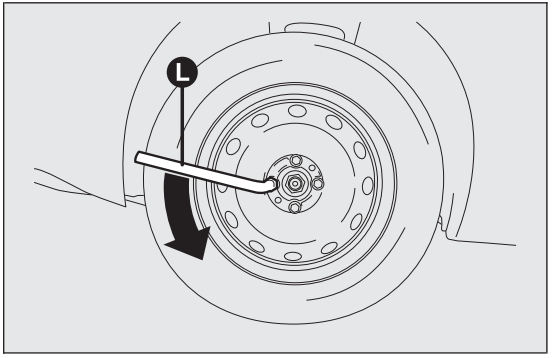

fig. 126 F0Q0394

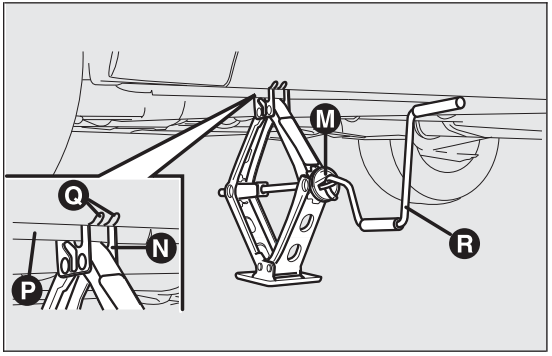

fig. 127 F0Q0395

- ❒ fit handle R fig. 127 to operate the jack and raise the car until the wheel is a few centimetres above the ground;
- ❒ fully loosen the fastening bolts and remove the wheel.
- ❒ make sure the contact surfaces between space-saver wheel and hub are clean so that the fastening bolts will not come loose;
- ❒ fit the space-saver wheel aligning the openings S fig. 128 with the corresponding centering pins T;
- ❒ using the wrench provided, tighten the four fastening bolts;
- ❒ turn the jack handle R fig. 127 to lower the car and remove the jack;
- ❒ use the wrench provided to fully tighten the bolts, passing alternately from one bolt to the opposite one, as per the numerical sequence illustrated in fig. 129.

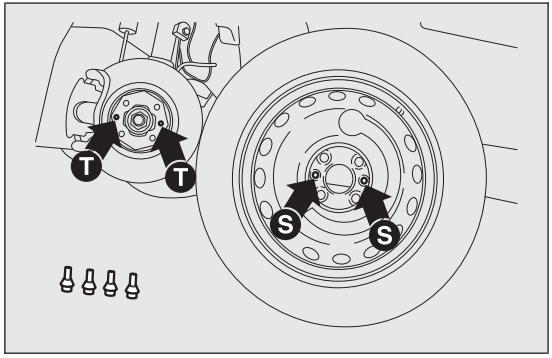

fig. 128 F0Q0396

REFITTING THE STANDARD WHEEL

Following the procedure described previously, raise the car and remove the space-saver wheel.

Versions with steel rims

Proceed as follows:

- ❒ make sure the contact surfaces between standard wheel and hub are clean so that the fastening bolts will not come loose;
- ❒ fit the standard wheel aligning the openings S fig. 128 with the corresponding centering pins T;
- ❒ using the wrench provided, tighten the fastening bolts;
- ❒ lower the car and remove the jack;
- ❒ using the wrench provided, fully tighten the bolts in the sequence shown in diagram fig. 129;

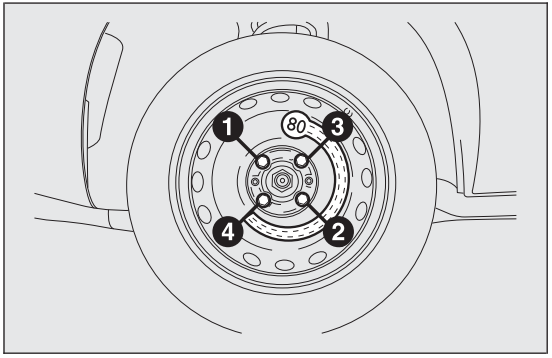

fig. 129 F0Q0397

❒ fit the hub cap so that the inflation valve can exit through the special slot visible on the cap itself;

❒ pressure-fit the hub cap starting from the parts nearest to the inflation valve and continue until it is completely fitted.

IMPORTANT If it is not fitted properly, the hub cap may detach itself when the car is running.

Versions with alloy rims

Proceed as follows:

❒ tighten centering pin A fig. 130 in one of the fixing bolt openings on the wheel hub;

❒ place the wheel on the pin and tighten the bolts using the wrench provided. Bolt insertion is eased by the use of the extension B provided;

❒ undo centering pin A and tighten the last fastening bolt;

❒ lower the car and remove the jack;

❒ using the wrench provided, fully tighten the bolts in the same sequence shown previously for the space-saver wheel (see fig. 129);

❒ refit the hub cap.

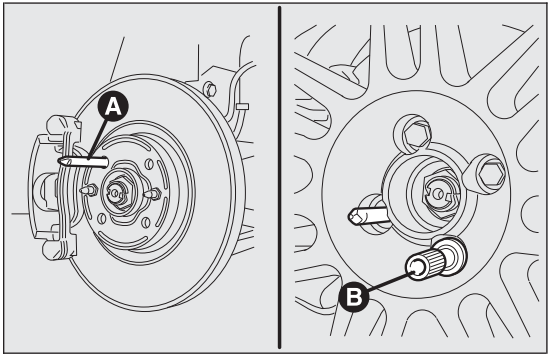

fig. 130 F0Q0217

At the end of operation

Proceed as follows:

- ❒ arrange the space-saver wheel G fig. 131 in the specific compartment in the luggage compartment;
- ❒ insert the partially open jack into container F and force it slightly into its housing so that it does not vibrate when the car is moving;
- ❒ put the tools back into their places in the container;
- ❒ stow the container complete with tools on the space-saver wheel and secure everything with clamping device E;
- ❒ correctly reposition the rigid preformed cover in the luggage compartment.

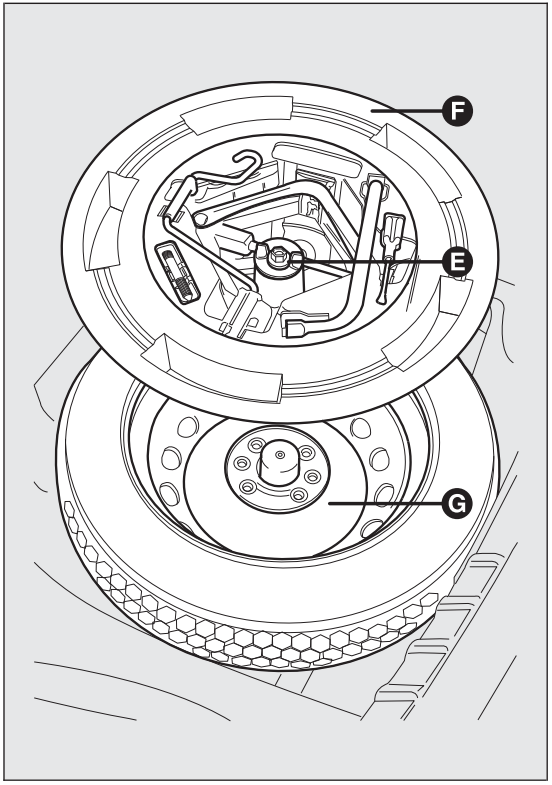

fig. 131 F0Q0392

FIX&GO Automatic KIT

The Fix&Go Automatic kit is located in a special container in the boot.

The kit includes fig. 132:

- ❒ a cylinder A containing sealing fluid and fitted with: filling tube B and adhesive label C with the wording "max. 80 km/h" to be placed in a position clearly visible for the driver (e.g. on the dashboard) after repairing the tyre;
- ❒ an information leaflet fig. 133, providing instructions for using the kit correctly. This booklet should be given to the persons charged with handling the tyre treated with this kit;
- ❒ a compressor D including a pressure gauge and connections, found in the compartment;
- ❒ a pair of protective gloves located in the side compartment of the compressor;
- ❒ adapters for inflating different elements.

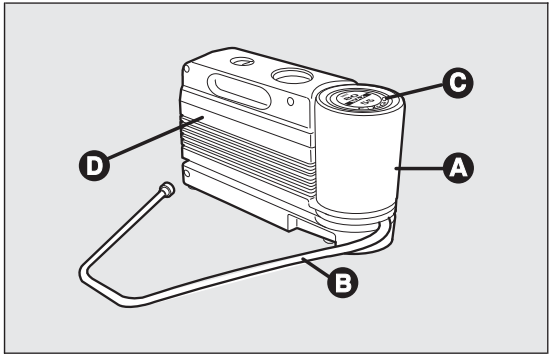

fig. 132 F0Q0510

WARNING

Give the booklet to the technicians who will be handling the tyre that was treated using the kit.

In the event of a puncture caused by foreign bodies, the kit may be used to repair tyres showing damages on the track or shoulder up to max 4 mm diameter.

WARNING

Holes and damage on the tyre side walls cannot be repaired. Do not use the kit if the tyre was damaged as a result of being used when underinflated.

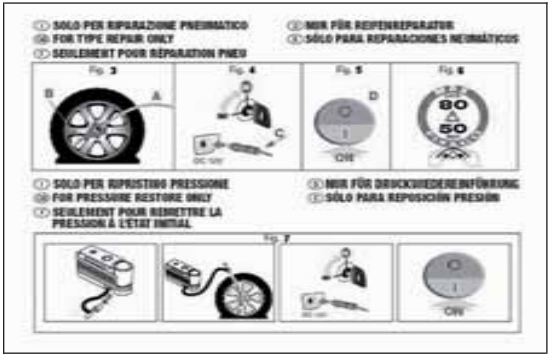

fig. 133 F0Q0511

WARNING

If the wheel rim has been damaged (bent so as to cause air to leak), the tyre may not be repaired. Do not remove foreign bodies (screws or nails) from the tyre.

IMPORTANT INFORMATION:

The sealing fluid of the quick tyre repair kit is effective with external temperatures of between −20°C and +50°C.

WARNING

Never operate the compressor for longer than 20 consecutive minutes. Risk of overheating. The kit is not suitable for definitive repairs, so the repaired tyres may only be used temporarily.

Dispose of the cylinder and the sealing fluid properly. Have the sealing fluid and the cylinder disposed of in compliance with national and local regulations.

WARNING

The cylinder contains ethylene glycol and latex: it may cause an allergic reaction. It is harmful if swallowed. It is irritant for the eyes in case of contact. May cause irritation if inhaled or on contact. Avoid contact with the eyes, skin and clothes. In the event of contact, rinse immediately with plenty of water. If ingested, do not induce vomiting. Rinse out your mouth, drink large quantities of water and seek immediate medical attention. Keep away from children. The product must not be used by asthmatics. Do not inhale the vapours during insertion and suction. Call a doctor immediately if allergic reactions are noted. Store the cylinder in the specific compartment, away from sources of heat. The sealing fluid has an expiry date. Replace the cylinder containing out-of-date sealing fluid.

INFLATING PROCEDURE

WARNING

Wear the protective gloves provided with the kit.

Proceed as follows:

❒ operate the handbrake. Unscrew the tyre valve cap, take out the flexible filler pipe A fig. 134 and tighten the ring nut B on the tyre valve;

❒ make sure that switch E fig. 136 for the compressor is in position 0 (off), start the engine, insert plug D fig. 135 into the cigar lighter socket and switch on the compressor by placing switch E fig. 136 in position I (on). Inflate the tyre to the pressure specified in the "Cold tyre pressures" paragraph in "Technical data" chapter. Check tyre pressure on pressure gauge F fig. 136 with compressor off to obtain a more precise reading;

❒ if after 5 minutes it is still impossible to reach at least 1.5 bar, disengage the compressor from the valve and power socket, then move the car forwards by approx. 10 metres in order to distribute the sealing fluid inside the tyre evenly, then repeat the inflation operation;

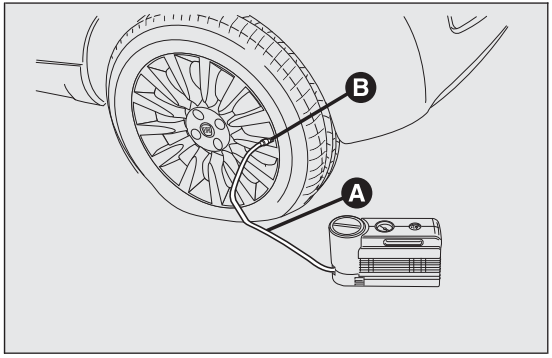

fig. 134 F0Q0513

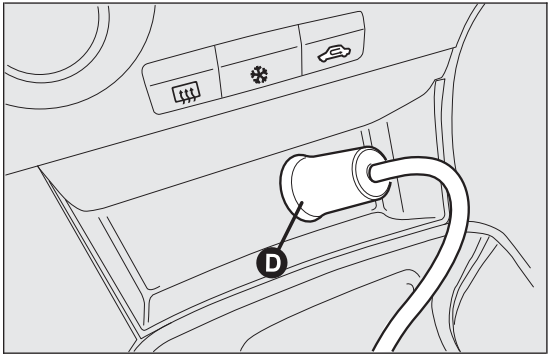

fig. 135 F0Q0515

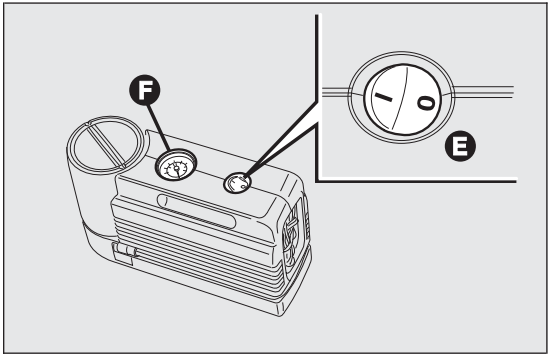

fig. 136 F0Q0516

- ❒ if after this operation it is still impossible after 5 minutes to reach at least 1.8 bar, do not start driving since the tyre is excessively damaged and the kit cannot guarantee proper hold, contact a Fiat Dealership.
- ❒ if reaching the tyre pressure specified in paragraph "Inflation pressure" in chapter "Technical Data", start driving immediately;
- ❒ after having driven for about 10 minutes, stop and recheck the tyre pressure; remember to apply the handbrake;
- ❒ if, on the other hand, the pressure is at least 1.8 bar, restore the correct pressure (with the engine running and the handbrake applied) and resume driving;
- ❒ drive with the utmost care to the nearest Fiat Dealership.

WARNING

Apply the adhesive label where it can be easily seen by the driver as a reminder that the tyre has been treated with the Fix&Go Automatic kit. Drive carefully, particularly on bends. Do not exceed 80 km/h. Do not accelerate or brake suddenly.

WARNING

If the pressure has fallen below 1.8 bar, do not drive any further: the Fix&Go Automatic kit cannot guarantee proper hold because the tyre is too damaged. Contact a Fiat Dealership.

WARNING

You must always indicate that the tyre was repaired using the Fix&Go Automatic kit. Give the booklet to the technicians who will be handling the tyre that was treated using the kit.

CHECKING AND RESTORING TYRE PRESSURE

The compressor may also be used for restoring pressure only. Release the quick coupling and connect directly to the tyre valve fig. 137; in this way, the cylinder will not be connected to the compressor and no sealing fluid will be injected.

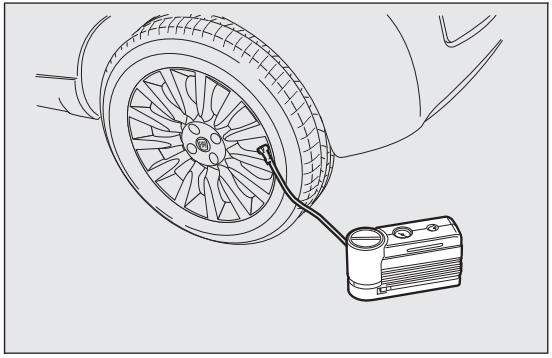

fig. 137 F0Q0517

CYLINDER REPLACEMENT

To replace the cylinder, proceed as follows:

❒ disconnect coupling B fig. 138;

❒ turn the cylinder to be replaced anticlockwise and raise it;

❒ fit the new cylinder and turn it clockwise;

❒ connect coupling B to the cylinder and fit transparent pipe A in the specific compartment.

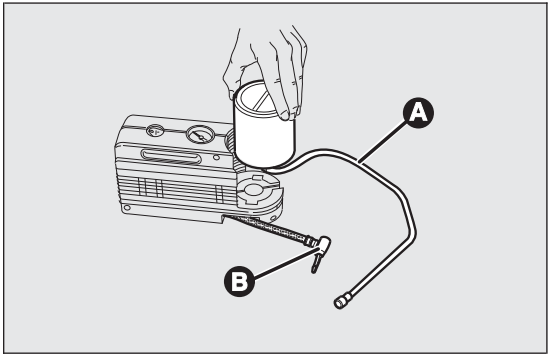

fig. 138 F0Q0512

CHANGING A BULB

GENERAL INSTRUCTIONS

❒ Before changing a bulb check the contacts for oxidation;

❒ Burnt bulbs must be replaced by others of the same type and power;

❒ after replacing a headlight bulb, always check its alignment;

❒ when a light is not working, check that the corresponding fuse is intact before changing a bulb. For the location of fuses, refer to the paragraph "If a fuse blows" in this section;

WARNING

Modifications or repairs to the electric system that are not carried out properly or do not take the system technical specifications into account can cause malfunctions leading to the risk of fire.

WARNING

Halogen bulbs contain pressurised gas, in the case of breakage they may burst.

Halogen bulbs must be handled holding the metallic part only. Touching the transparent part of the bulb with your fingers may reduce the intensity of the emitted light and even reduce the lifespan of the bulb. In case of accidental contact, wipe the bulb with a cloth moistened with alcohol and let the bulb dry.

If possible, we recommend have bulbs replaced by a Fiat Dealership. The correct operation and aiming of the outer lights are absolutely essential for the safety of the car and of compliance with law.

Due to the high supply voltage, gas discharge bulbs (Bi-Xenon) (for versions/ markets, where provided) must only be replaced by a specialist technician: danger of death! Contact a Fiat Dealership.

IMPORTANT When the weather is cold or damp or after heavy rain or washing, the surface of headlights or rear lights, may steam up and/or form drops of condensation on the inside. This is a natural phenomenon due to the difference in temperature and humidity between the inside and the outside of the glass which does not indicate a fault and does not compromise the normal operation of lighting devices. The mist disappears quickly when the lights are turned on, starting from the centre of the diffuser, extending progressively towards the edges.

TYPES OF BULBS

Various types of bulbs are fitted to your car:

All-glass bulbs: (type A) press-fitted. Pull to remove.

Bayonet type bulbs: (type B) to remove them press the bulb and turn it anticlockwise.

Tubular bulbs: (type C) release them from their contacts to remove.

Halogen bulbs: (type D) to remove the bulb, release the clip holding the bulb in place.

Halogen bulbs: (type E) to remove the bulb, release the clip holding the bulb in place.

Gas discharge bulb (Xenon): (type F) to replace them contact a Fiat Dealership.

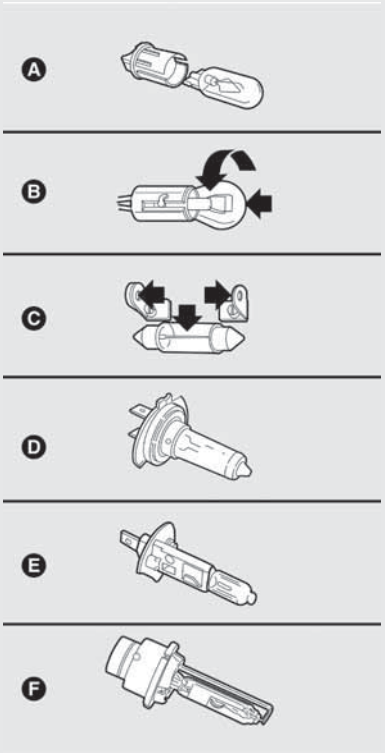

Bulbs

Use	Type	Power	Re. Figure
Main beam headlights	H1	55 W	E
Longlife dipped headlights	H1	55 W	D
Dipped headlights with gas discharge bulbs (for versions/markets, where provided)	D2R	35 W	F
Longlife front side lights	W5W	5 W	A
Front fog lights (for versions/markets, where provided)	H11	55 W	E
Front direction indicators	PY24W	24W	B
Side direction indicators	WY5W	5 W	A
Rear direction indicators	R10W	10 W	B
Rear side lights/rear fog lights	P5/21W	5 W/21 W	B
Rear side lights/break lights	P5/21W	5 W/21 W	B
Third brake light (additional brake light)	W2.3W	2.3 W	A
Reverse lights	P21W	21 W	B
Number plate lights	W5W	5 W	A
Front roof light	C10W	2x10 W	C
Rear roof light (for versions/markets, where provided)	C10W	10 W	C
Glove compartment light	C5W	5W	C
Luggage compartment roof light	W5W	5W	A
Courtesy mirror lights (for versions/markets, where provided)	C5W	5 W	C

REPLACING EXTERIOR BULBS

For the type of bulb and power rating, see “Changing a bulb" paragraph.

FRONT LIGHT CLUSTERS

The front light clusters contain side lights, dipped headlights, main beam headlights and direction indicator bulbs.

The bulbs are arranged inside the light cluster as follows fig. 139:

A Side lights/daytime running lights and main beam headlights

B Dipped headlights

C Direction indicators

DIPPED HEADLIGHTS

To change the bulb, proceed as follows:

❒ remove the protective cover B fig. 139;

❒ release the bulb holding clip A fig. 140;

❒ disconnect the electrical connector B;

❒ remove bulb C and replace it;

❒ fit the new bulb, ensuring that the outline of the metal part coincides with the splining on the curve of the headlight. Then reconnect the electrical connector B and reattach the bulb holding clip A;

❒ refit the protective cover A fig. 139.

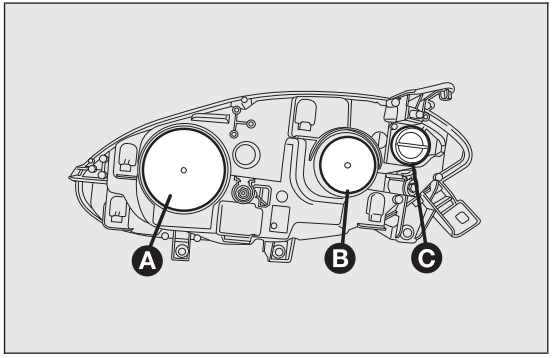

fig. 139 F0Q0704

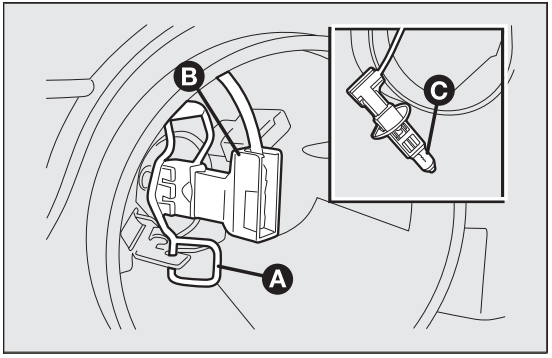

fig. 140 F0Q0705

With gas discharge bulbs (Bi-Xenon)
(for versions/markets, where provided)

WARNING

Due to the high power supply voltage, gas discharge bulbs (Bi-Xenon) should only be replaced by specialised personnel: danger of death! Contact a Fiat Dealership.

SIDE LIGHTS

To change the bulb, proceed as follows:

❒ remove the protective cover A fig. 139;

❒ turn the bulb holder A fig. 141 anticlockwise and remove it;

❒ remove the bulb B and replace it;

❒ refit the new bulb, put the bulb holder A fig. 141 back into place and then refit the protective cover B fig. 139 properly.

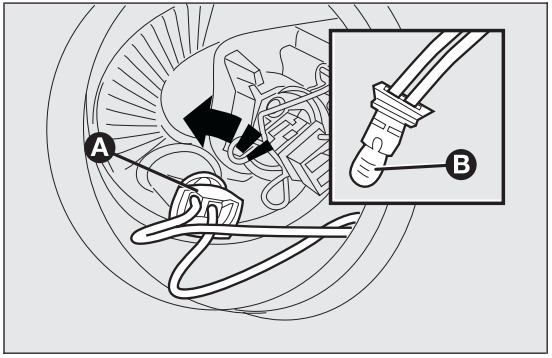

fig. 141 F0Q0706

MAIN BEAM HEADLIGHTS

To change the bulb, proceed as follows:

❒ remove the protective cover A fig. 139;

❒ release the bulb holding clip A fig. 142;

❒ remove bulb C and replace it;

❒ fit the new bulb, ensuring that the outline of the metal part coincides with the splining on the curve of the headlight. Then reconnect the electrical connector B and reattach the bulb holding clip A;

❒ refit the protective cover B fig. 139.

DIRECTION INDICATORS

Front

To change the bulb, proceed as follows:

❒ rotate the protective cover C fig. 139 anticlockwise;

❒ remove the bulb B fig. 143 and replace it;

❒ refit the protective cover A.

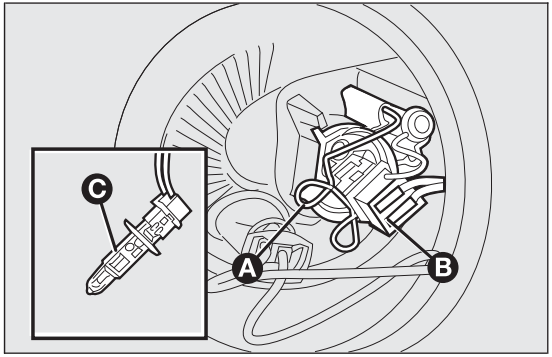

fig. 142 F0Q0707

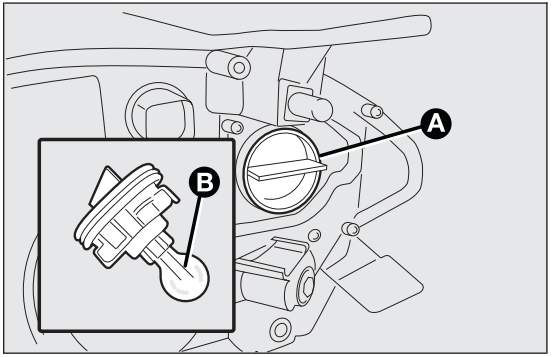

fig. 143 F0Q0708

Side

To change the bulb, proceed as follows:

- ❒ adjust the lens A fig. 144 to compress in the internal catch B, then pull the cluster outwards;
- ❒ turn the bulb holder C anticlockwise, extract the press-fitted bulb D and replace it;
- ❒ refit the bulb holder C in the lens and turn it clockwise;
- ❒ refit the cluster making sure that the internal catch B clips into position.

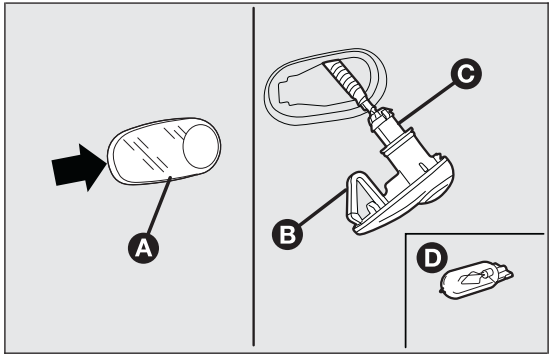

fig. 144 F0Q0709

FOG LIGHTS

For replacing the bulb fig. 145 contact a Fiat Dealership.

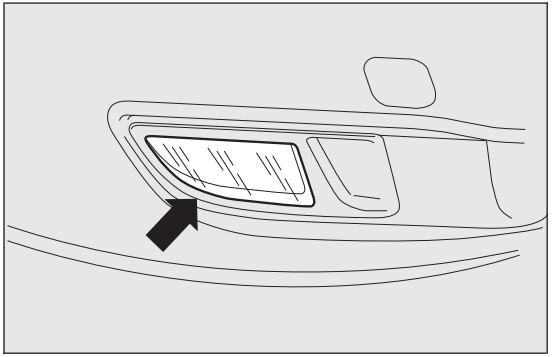

fig. 145 F0Q0710

REAR LIGHT CLUSTERS

The rear light clusters contain side lights, direction indicators and brake lights (stop) bulbs.

The bulbs are arranged inside the light cluster as follows fig. 146:

B Side lights/brake light (double light)

C Direction indicators

To change the bulb, proceed as follows:

❒ open the luggage compartment and loosen the two rear light cluster fastening screws A fig. 147;

❒ extract the light cluster by removing it with both hands in the direction indicated by the arrows fig. 148;

❒ disconnect the electrical connector and, adjusting the three retaining tabs, remove the protective cover A fig. 149. Then, replace the concerned bulb.

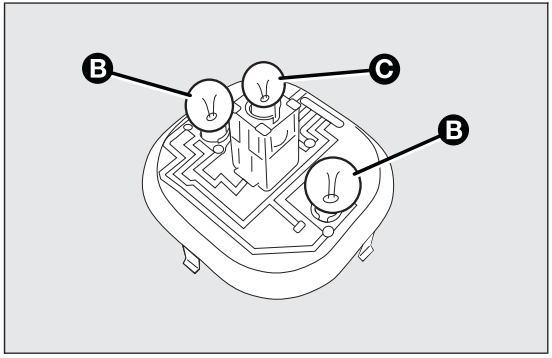

fig. 146 F0Q0714

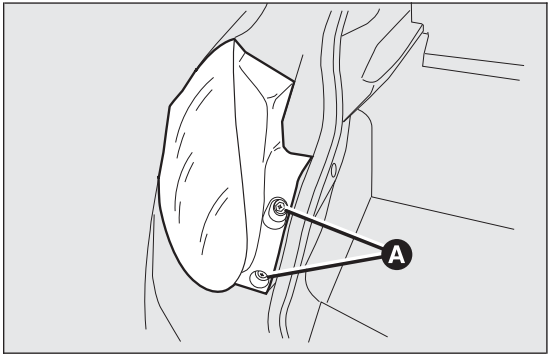

fig. 147 F0Q0715

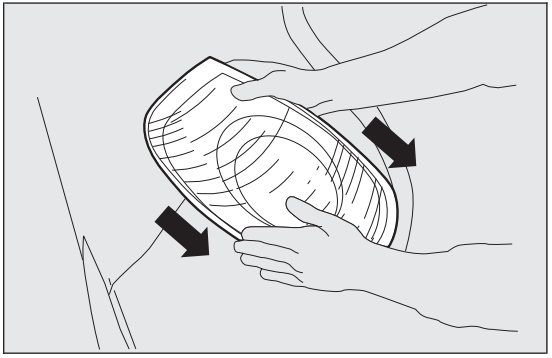

fig. 148 F0Q0739

REVERSE LIGHT

For bulb replacement fig. 150, contact a Fiat Dealership.

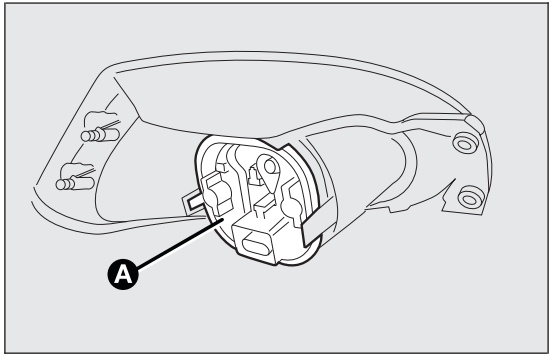

fig. 149 F0Q0713

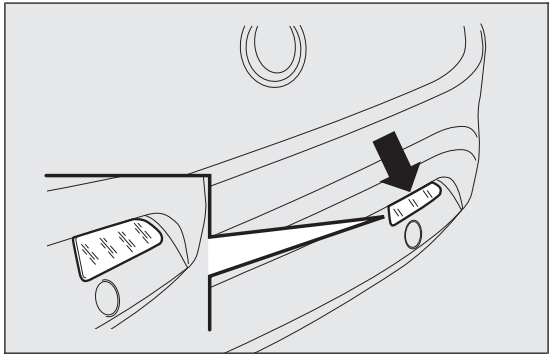

fig. 150 F0Q0711

REAR FOG LIGHT

For bulb replacement fig. 151, contact a Fiat Dealership.

3rd BRAKE LIGHTS

To change the bulb proceed as follows:

❒ open the luggage compartment;

❒ remove the cover A fig. 152;

❒ extract the lens unit B fig. 153 and disconnect the electrical connector;

❒ press in the tabs C fig. 153 and remove the bulb holder;

❒ remove the snap-fitted bulb and replace it.

❒ refit the cover A fig. 152 and close the luggage compartment.

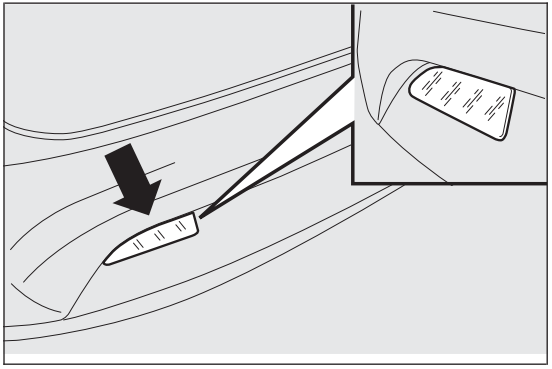

fig. 151 F0Q0712

NUMBER PLATE LIGHTS

To replace the bulbs proceed as follows:

❒ operate in the point indicated by the arrows and remove the lens units A fig. 154;

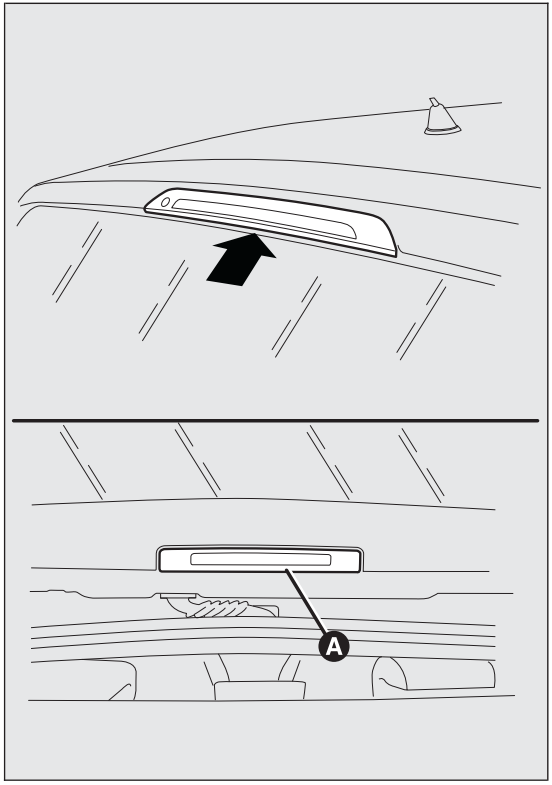

fig. 152 F0Q0716

❒ turn the bulb holder B fig. 155 clockwise;

❒ remove bulb C and replace it.

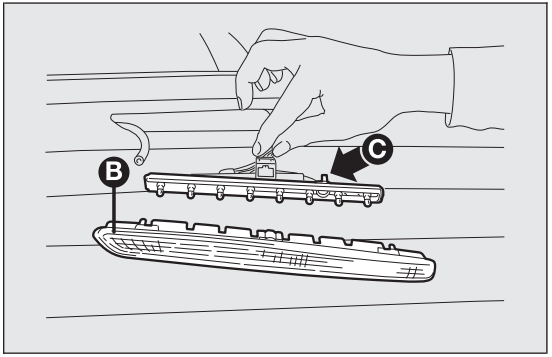

fig. 153 F0Q0751

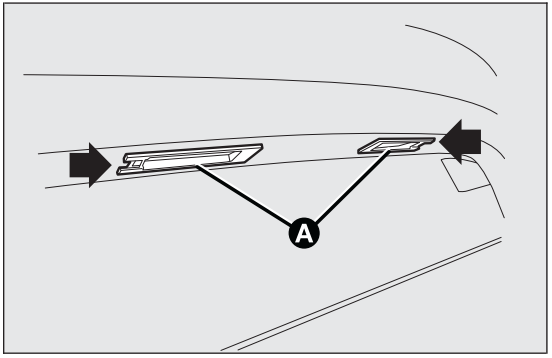

fig. 154 F0Q0718

REPLACING INTERIOR BULBS

For the type of bulb and corresponding power rating, see the paragraph "Changing a bulb".

FRONT ROOF LIGHT

To change the bulbs, proceed as follows:

❒ operate in the points indicated by the arrows and remove light A fig. 156;

❒ open protective flap B fig. 157;

❒ replace the bulbs C releasing them from the side contacts and making sure that the new bulbs are correctly secured between the contacts;

❒ close flap B fig. 157 and fix roof light A fig. 156 in its housing, making sure that it locks into place.

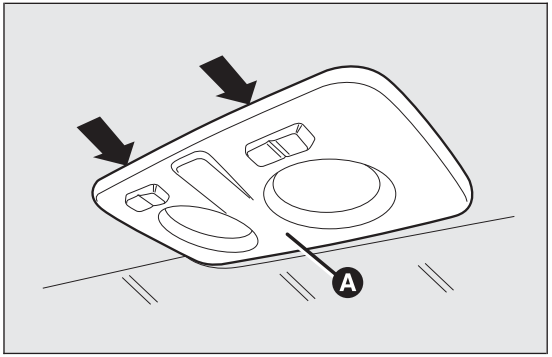

fig. 156 F0Q0720

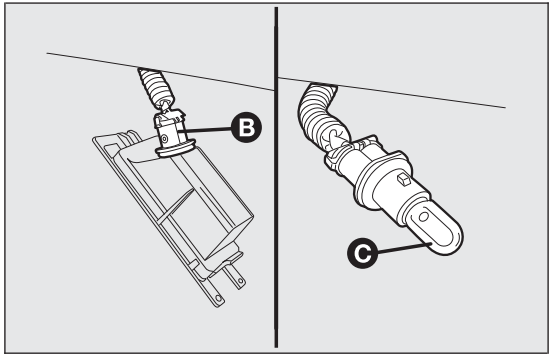

fig. 155 F0Q0719

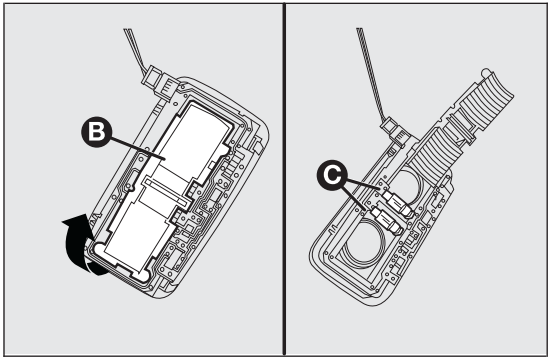

fig. 157 F0Q0721

REAR ROOF LIGHT

Versions without sun roof

Proceed as follows to replace the bulbs:

❒ operate in the point shown by the arrow and remove roof light A fig. 158;

❒ replace bulb B releasing it from the side contacts and making sure the new bulb is correctly fastened between the contacts.

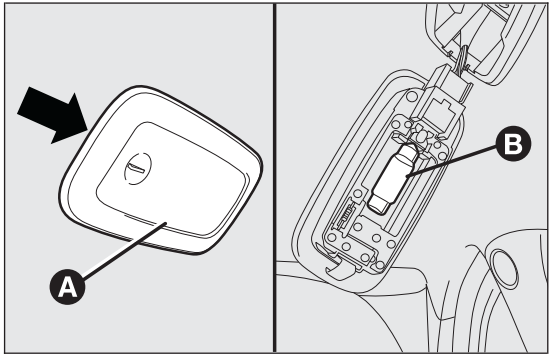

fig. 158 F0Q0905

Versions with sun roof

Proceed as follows to replace the bulbs:

❒ operate in the point shown by the arrow and remove roof light A fig. 159;

❒ replace bulb B releasing it from the side contacts and making sure the new bulb is correctly fastened between the contacts.

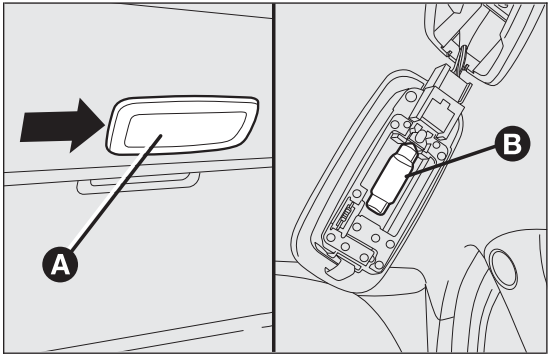

fig. 159 F0Q0906

LUGGAGE COMPARTMENT ROOF LIGHT

To replace the bulb, proceed as follows:

❒ open the luggage compartment;

❒ remove the light A fig. 160 levering in the point shown by the arrow;

❒ open protection B fig. 161 and replace the snap-fitted bulb;

❒ re-close the protection B on the lens;

❒ refit the roof light A by inserting it in its correct position firstly on one side and then pressing on the other until it clicks into place.

GLOVE COMPARTMENT LIGHT

To change the bulbs, proceed as follows:

❒ open the glove compartment and extract roof light A fig. 162;

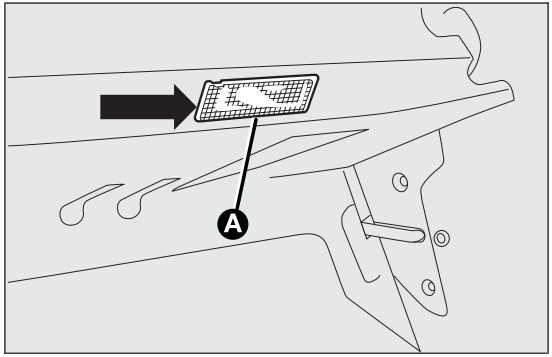

fig. 160 F0Q0724

❒ replace bulb B releasing it from the side contacts and making sure the new bulb is correctly fastened between the contacts.

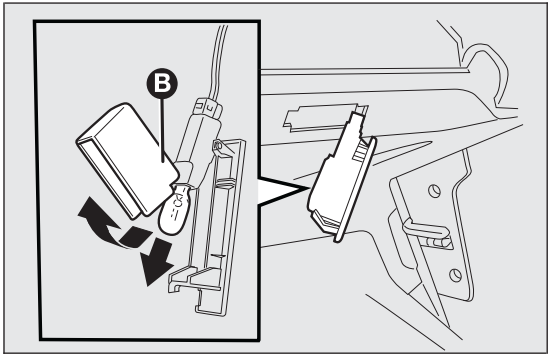

fig. 161 F0Q0725

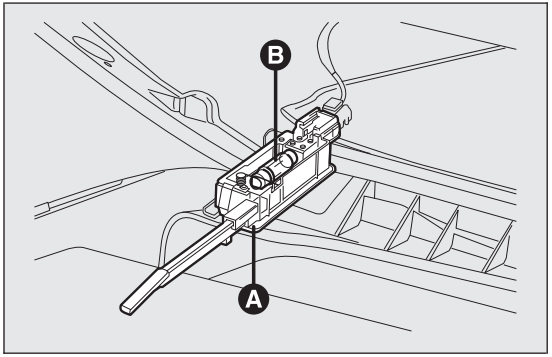

fig. 162 F0Q0726

COURTESY MIRROR LIGHTS

(for versions/markets, where provided)

Replace the bulb as follows:

❒ open the mirror cover A fig. 163;

❒ extract light B levering in the points shown by the arrows;

❒ replace bulb C releasing the side contacts, insert the new bulb and make sure that it is correctly locked between the contacts.

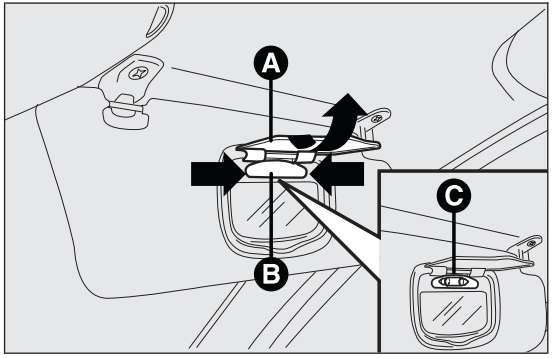

fig. 163 F0Q0753

REPLACING FUSES

INTRODUCTION

Fuses protect the electrical system: they intervene (blow) in the event of a failure or improper intervention on the system.

When a device does not work, check the condition of its protective fuse: the conductor element A fig. 164 must be intact. If it is not, replace the blown fuse with another with the same amperage (same colour).

B = intact fuse;

C = fuse with damaged filament.

To facilitate fuse replacement, use the pliers D hooked inside the fuse box lid on the dashboard left-hand side.

Refer to the tables on the following pages to identify the protective fuse.

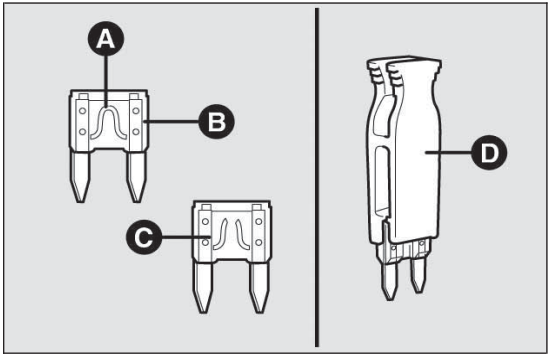

fig. 164 F0Q0220

WARNING

If the replaced fuse blows again, contact a Fiat Dealership.

WARNING

Never replace a fuse with metal wires or other material.

WARNING

Never replace a fuse with another with a higher amp rating; DANGER OF FIRE.

WARNING

If a general protective fuse (MEGA-FUSE, MIDI-FUSE, MAXI-FUSE) blows, contact a Fiat Dealership.

WARNING

Before replacing a fuse, make sure that the ignition key has been removed and that all the other services are switched off and/or disengaged.

WARNING

Contact a Fiat Dealership if a safety system (airbags, brakes), engine system (engine, gearbox) or steering system general protection fuse blows.

FUSE LOCATION

The fuses are grouped in three fuse boxes:

❒ dashboard fuse box;

❒ engine compartment fuse box;

❒ luggage compartment fuse box.

Dashboard fuse box
fig. 166

To access the dashboard fuse box, loosen the three screws A in fig. 165 and remove the flap B.

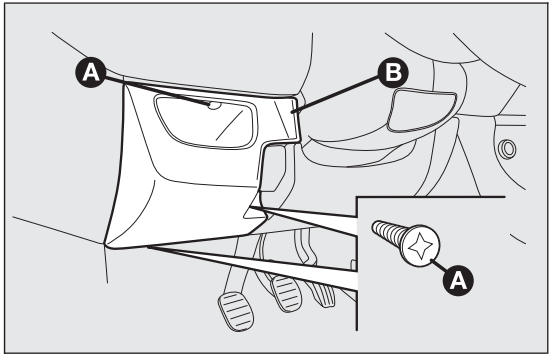

fig. 165 F0Q0727

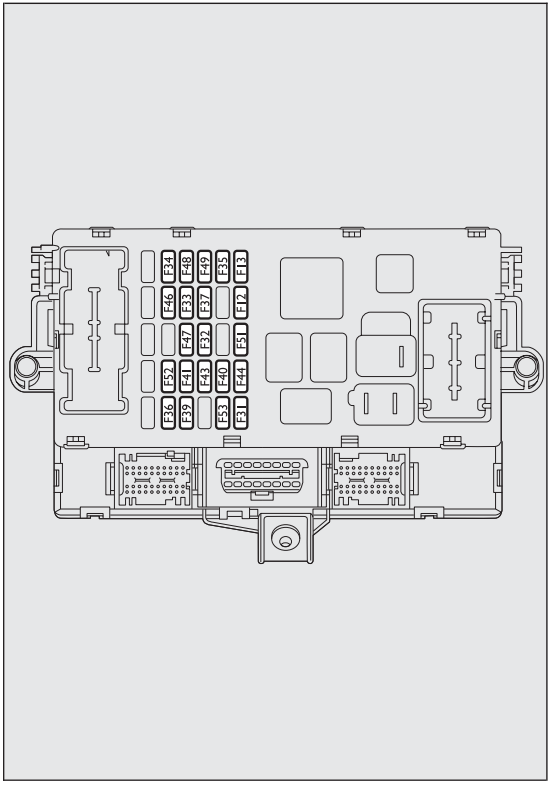

fig. 166 F0Q0778

Engine compartment fuse box next to the battery fig. 168

(for versions/markets, where provided)

A second fuse box is located on the right-hand of the engine compartment, next to the battery; to reach it loosen the fixing screws and remove cover A fig. 167.

The number identifying the electrical component corresponding to each fuse is on the back of the cover.

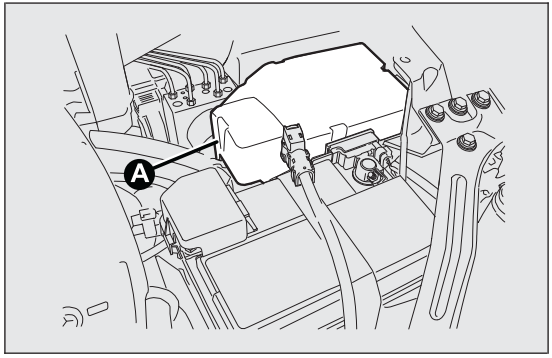

fig. 167 F0Q0816

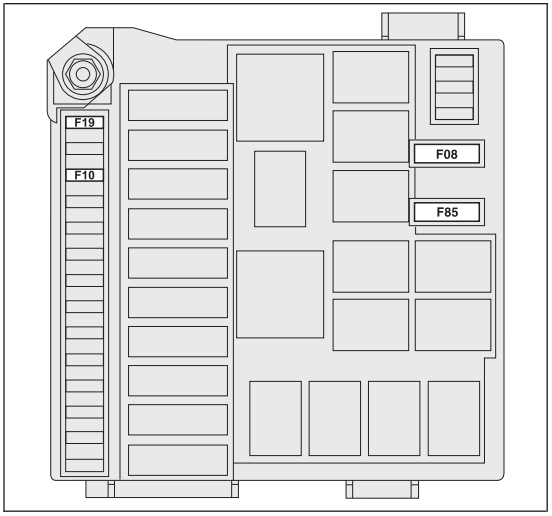

fig. 168 F0Q0815

Engine compartment fuse box next to the battery
fig. 170
(for versions/markets, where provided)

To access the fuse box next to the battery, press retaining clips A fig. 169 and remove protection cover B.

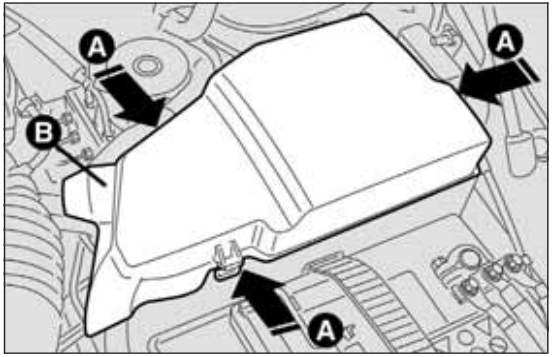

fig. 169 F0Q0498

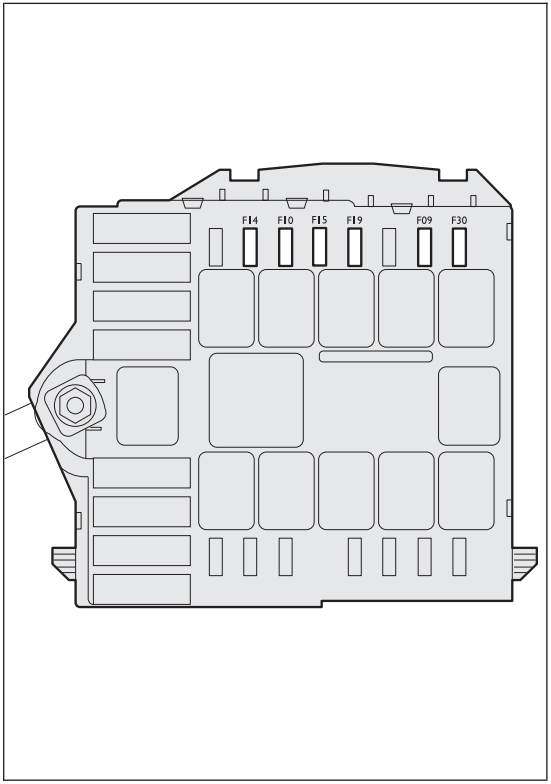

fig. 170 F0Q0779

Luggage compartment fuse box fig. 171

To access the fuse box located on the left side of the luggage compartment, open lid A fig. 172.

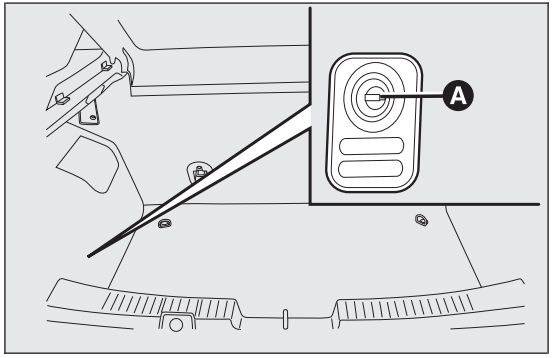

fig. 171 F0Q0747

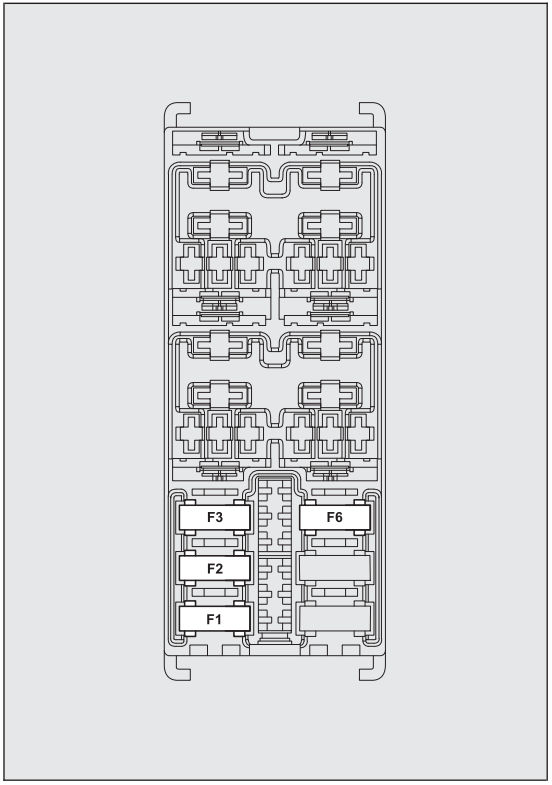

fig. 172 F0Q0776

FUSE SUMMARY TABLE

Dashboard fuse box	FUSE	AMPS
Right dipped headlight (halogen headlights)	F12	7,5
Right dipped headlight (Bi-Xenon headlights)	F12	15
Left dipped headlight (halogen headlights)	F13	7,5
Left dipped headlight (Bi-Xenon headlights)	F13	15
Reverse	F35	5
3rd brake light	F37	7,5
Rear fog light (driver's side)	F53	7,5
Headlight alignment corrector system (halogen headlights)	F13	7,5
Relay switch coils on engine compartment fuse box (CVM)/Body Computer control unit (NBC)	F31	5
HI-FI audio system subwoofer amplifier	F32	15
Left rear electric window	F33	20
Right rear electric window	F34	20
Control on brake pedal (NC contact)/Water presence in diesel sensor/Air flow meter	F35	5
Central locking system control unit (CGP) (door opening/closing, safe lock, tailgate release)	F36	20
Control on brake pedal (normally open contact NO)/ Instrument panel (NQS)/Gas discharge bulbs control units on front headlights	F37	7,5

Dashboard fuse box	FUSE	AMPS
Radio and radio navigator /Radio setup//Blue&Me™ system/Alarm siren (CSA)/Alarm system on roof light/ Internal cooling unit/Tyre pressure monitoring system control unit (CPP)/Diagnosis socket connector/Rear roof lights	F39	10
Heated rear window	F40	30
Electric door mirror demisters/Demisters on windscreen jets	F41	7,5
Windscreen wiper/Bi-directional windscreen/rear window washer electric pump system on steering column stalk	F43	30
Current sockets/Cigar lighter	F44	15
Electric sun roof motor	F46	20
Front electric window (driver side)	F47	20
Front electric window (passenger side)	F48	20
Emergency control panel (lighting)/Right branch central control panel (lighting, ASR switch) and left branch/ Steering wheel controls (lighting)/Control panel on front roof light (lighting)/Volume sensing alarm system control unit (deactivation)/Electric sun roof system (control unit, control lighting)/Rain sensor/Dusk sensor on rear view mirror/Heating pad activation controls on front seats	F49	5

Dashboard fuse box	FUSE	AMPS
Internal cooling unit/Radio setup/Cruise Control lever/ Blue&Me™ system control unit/Parking sensor control unit (NSP)/Air pollution sensor (AQS)/Automatic climate control system/Electric door mirrors (adjustment, folding)/Tyre pressure monitoring system control unit (CPP)	F51	5
Rear window wiper	F52	15
Instrument Panel (NQS)	F53	7,5

Engine compartment fuse box	FUSE	AMPS
Main beam headlights	F14	15
Left/right fog light/cornering light	F30	15
Climate control fan	F08	40
Headlight washer pump	F09	30
Acoustic warning	F10	10
Additional heater (PTC1)	F15	30
Air conditioning compressor	F19	7,5
Fuel pump	F85	15

Luggage compartment fuse box	FUSE	AMPS
Front right seat movement	F1	30
Front left seat movement	F2	30
Front left seat heating	F3	10
Front right seat heating	F6	10

BATTERY RECHARGING

IMPORTANT The battery recharging procedure is given as information only. You are advised to contact a Fiat Dealership to have this operation performed.

Low amperage slow recharging for approximately 24 hours is advised. Charging for a longer time may damage the battery.

Charge the battery as follows:

❒ disconnect the negative battery terminal;

❒ connect the charger cables to the battery terminals, observing the polarity;

❒ turn on the charger;

❒ when it is recharged, turn the charger off before disconnecting it from the battery;

❒ reconnect the negative battery terminal.

IMPORTANT If the car is equipped with an alarm system, this has to be disabled using the remote control (see the "Alarm" paragraph in "Knowing your car" chapter).

WARNING

Battery fluid is poisonous and corrosive: avoid contact with your skin and eyes. The battery should be charged in a well ventilated place, away from naked flames or possible sources of sparks: danger of explosion and fire.

WARNING

Do not attempt to charge a frozen battery: it must be thawed first, otherwise it may explode. If freezing has occurred, the battery should be checked by skilled personnel to make sure that the internal elements are not damaged and that the body is not cracked, with the risk of leaking poisonous and corrosive acid.

RAISING THE CAR

If the car needs to be jacked up, go to a Fiat Dealership which is equipped with jack arms or workshop lifts.

The car must only be lifted laterally by positioning the end of the arms or the workshop lift in the points illustrated in fig. 173

IMPORTANT For Sport versions, take care not to damage the side skirts when lifting the car with the workshop lift.

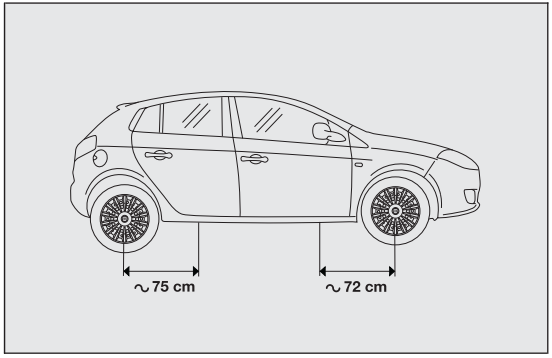

fig. 173 F0Q0729

TOWING THE CAR

The tow hook, which is supplied with the car, is housed in the tool box, under the carpet in the luggage compartment.

ATTACHING THE TOW HOOK

Proceed as follows:

❒ release the cap by operating on tab A fig. 174–fig. 175;

❒ take the tow hook B from its support;

❒ fully screw in the hook on the rear or front threaded pin.

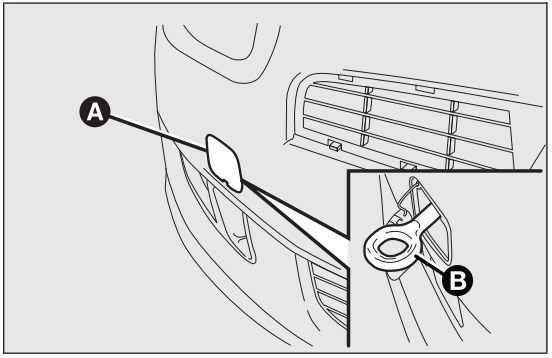

fig. 174 F0Q0730

WARNING

Before towing, turn the ignition key to MAR-ON and then to STOP without removing it. The steering column will automatically lock when the key is removed and the wheels cannot be steered.

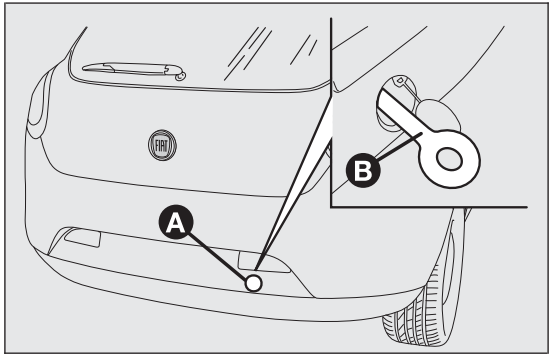

fig. 175 F0Q0731

WARNING

Whilst towing, remember that as the assistance of the brake servo and the electric power steering is not available, greater force needs to be exerted on the brake pedal and more effort is required on the steering wheel. Do not use flexible cables when towing and avoid jerky movements. During towing, make sure that the trailer hitch does not damage any components it is touching. When towing the car, it is compulsory to respect specific highway code regulations relating to the tow hook and procedures for towing on the road.

WARNING

Do not start the engine while towing the car.

WARNING

Before tightening the hook clean the threaded housing thoroughly. Make sure that the hook is fully fastened in the housing before towing the car.

WARNING

The front and rear tow hooks should be used only for emergencies on the road. You are allowed to tow the car for short distances using an appropriate device in accordance with the highway code (a rigid bar), to move the vehicle on the road in readiness for towing or transporting via a breakdown vehicle. Tow hooks MUST NOT be used to tow vehicles off the road or where there are obstacles and/or for towing operations using cables or other non-rigid devices. Respecting the above conditions, towing must take place with the two vehicles (one towing, the other towed) aligned as much as possible along the same centre line.

GETTING TO KNOW YOUR CAR
SAFETY
STARTING AND DRIVING
WARNING LIGHTS AND MESSAGES
IN AN EMERGENCY
SERVICING AND MAINTENANCE
TECHNICAL SPECIFICATIONS
INDEX

SCHEDULED SERVICING

Correct servicing is essential in guaranteeing a long life for the car under the best conditions.

This is why Fiat has planned a series of checks and services every 35,000 km.

However, scheduled servicing does not suffice to cover all the car's requirements: even in the initial period before the 35,000 km service, and then subsequently between one service and the next, ordinary care is always required, such as routine checks and topping up fluid levels, checking tyre pressures etc.

IMPORTANT The Scheduled Servicing Plan coupons are set out by the Manufacturer. Failure to have them carried out may invalidate the warranty.

Scheduled Servicing is performed by all Fiat Dealerships, at pre-established times.

If, during any service, the need arises for additional replacements or repairs, these may be carried out only with the explicit agreement of the Customer.

IMPORTANT It is advisable to inform a Fiat Dealership of any small operating irregularities without waiting for the next service.

If the car is used frequently for towing a trailer, the interval between services should be reduced.

SCHEDULED SERVICING PLAN

Thousands of miles	**21**	**42**	**63**	**84**	**105**
Thousands of km	**35**	**70**	**105**	**140**	**175**
Months	**24**	**48**	**72**	**96**	**120**
Check tyre condition/wear and adjust pressure, if necessary	●	●	●	●	●
Check operation of lighting system (headlights, direction indicators, hazard warning lights, luggage compartment, passenger compartment, glove compartment, instrument panel warning lights, etc.)	●	●	●	●	●
Check operation of windscreen washer system and adjust jets if necessary	●	●	●	●	●
Check windscreen/rear window wiper blades position/wear	●	●	●	●	●
Check condition and wear of front disc brake pads and operation of pad wear indicator	●	●	●	●	●
Check condition and wear of rear disc brake pads	●	●	●	●	●
Visually inspect condition of: exterior bodywork, underbody protection, rigid and flexible pipe sections (exhaust, fuel system, braking system), rubber elements (boots, sleeves, bushes, etc.)	●	●	●	●	●
Check cleanliness of bonnet and luggage compartment locks, cleanliness and lubrication of linkages	●	●	●	●	●
Check and, if necessary, top up fluid levels (brakes/hydraulic clutch, windscreen washer, battery, engine cooling, etc.)	●	●	●	●	●
Check handbrake lever travel and adjust, if required	●	●	●	●	●
Visually inspect conditions of the accessory drive belt/s		●			●
Check battery charge status and possibly recharge	●	●	●	●	●
Check emissions/fumes	●	●	●	●	●

Thousands of miles	**21**	**42**	**63**	**84**	**105**
Thousands of km	**35**	**70**	**105**	**140**	**175**
Months	**24**	**48**	**72**	**96**	**120**
Check engine management system operation (through the diagnosis socket)	●	●	●	●	●
Replace accessory drive belt/s			●		
Replacement of toothed timing drive belt(*)				●	
Replace fuel filter		●		●	
Air cleaner cartridge replacement	●	●	●	●	●
Change engine oil and replace oil filter (version without DPF) (or every 24 months)	●	●	●	●	●
Change engine oil and replace oil filter (versions with DPF) (**) (***)					
Change brake fluid (or every 24 months)		●		●	
Change pollen filter (or every 15 months)	●	●	●	●	●

(*) Regardless of the distance covered, the timing belt must be changed every 4 years for particularly demanding use (cold climates, town driving, long periods of idling) or at least every 5 years

(**) The actual interval for changing the oil and replacing the engine oil filter depends on the car usage conditions and is signalled by the warning light or message (if present) on the instrument panel and must never exceed 24 months.

(***) If the car is mainly used for town driving, change the engine oil and filter every 12 months.

PERIODIC CHECKS

Every 1,000 km or before long journeys, check and, if necessary, restore:

❒ engine coolant, brake fluid and windscreen washer fluid level;

❒ tyre inflation pressure and condition;

❒ operation of lighting system (headlamps, direction indicators, hazard warning lights, etc.);

❒ operation of screen washer/wiper system and positioning/wear of windscreen/rear window wiper blades.

Every 3,000 km, check and top up, if required, the engine oil level.

HEAVY-DUTY USE OF THE CAR

If the car is used mainly under one of the following conditions:

❒ towing a trailer or caravan;

❒ dusty roads;

❒ short, repeated journeys (less than 7-8 km) at sub-zero outside temperatures;

❒ engine often idling or driving long distances at low speeds or long periods of idleness;

you need to perform the following inspections more frequently than shown in the Scheduled Servicing Plan:

❒ check front disc brake pad conditions and wear;

❒ check cleanliness of bonnet and boot locks, cleanliness and lubrication of linkage;

❒ visually inspect conditions of: engine, gearbox, transmission, pipes and hoses (exhaust - fuel system - brakes) and rubber elements (boots - sleeves - bushes - etc.);

❒ check battery charge and battery fluid level (electrolyte);

❒ visually inspect condition of the accessory drive belts;

❒ check and, if necessary, change engine oil and replace oil filter;

❒ check and, if necessary, replace pollen filter.

CHECKING FLUID LEVELS

WARNING

Never smoke while working in the engine compartment: inflammable gases and vapours may be present, constituting a fire risk.

WARNING

Be very careful when working in the engine compartment when the engine is hot: you may get burned. Remember that the fan may start up if the engine is hot: this could injure you. Make sure that scarves, ties and other loose fitting garments do not get caught up in moving parts.

When topping up, take care not to mix up the various types of fluids: they are not compatible with each other and could seriously damage the car.

1.6 MultiJet version

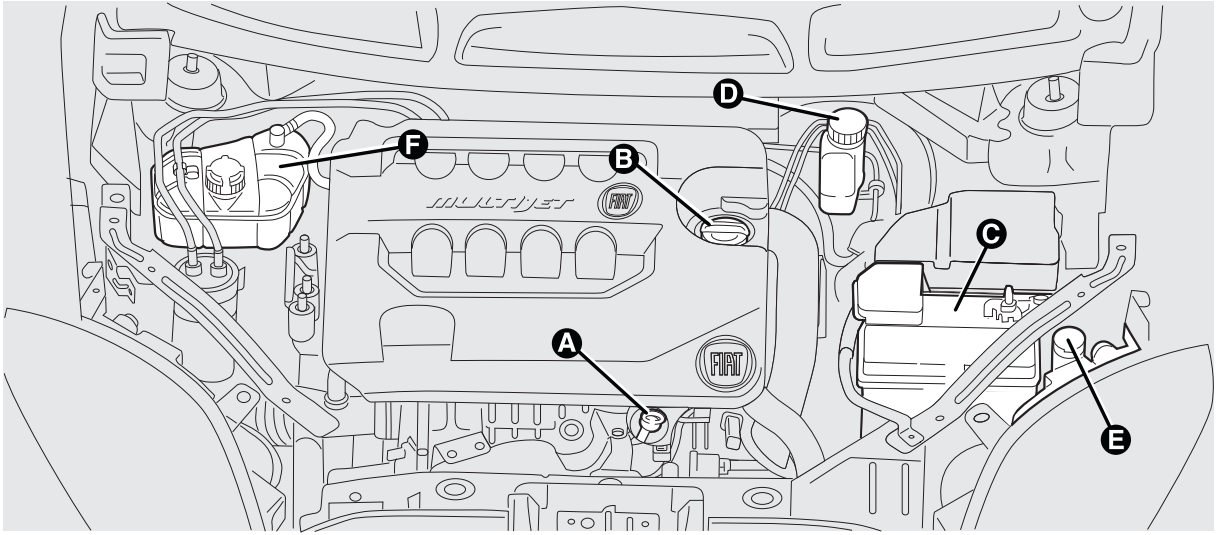

fig. 176 F0Q0767

A. Engine oil dipstick B. Engine oil cap/filler C. Battery D. Brake fluid E. washer fluid for windscreen/rear window/ headlights F. Engine coolant

2.0 MultiJet version (for versions/markets, where provided)

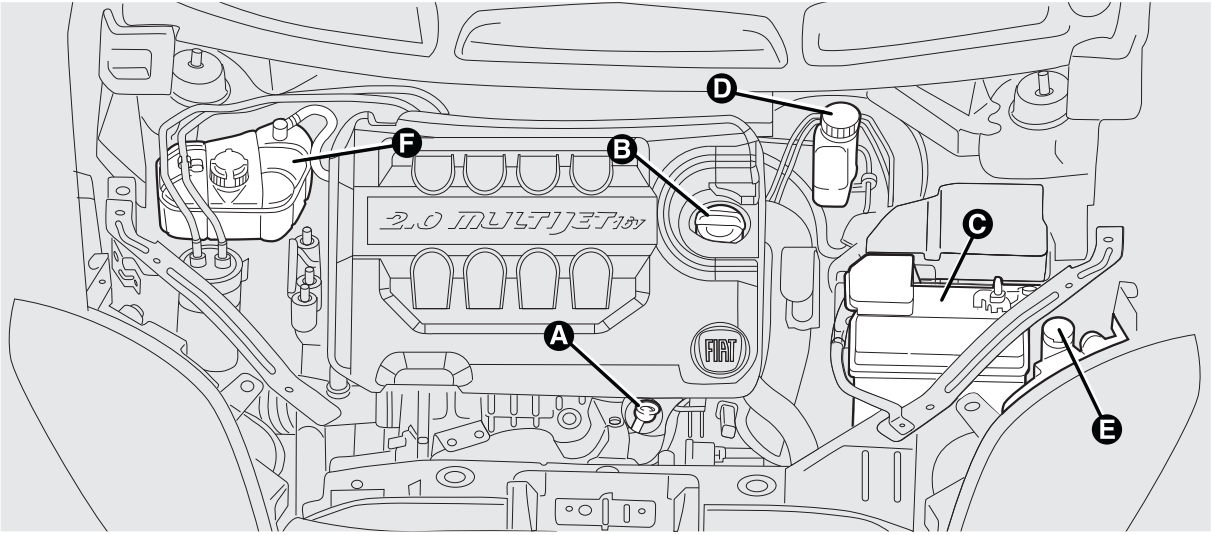

fig. 177 F0Q0768

A. Engine oil dipstick B. Engine oil cap/filler C. Battery D. Brake fluid E. washer fluid for windscreen/rear window/ headlights F. Engine coolant

ENGINE OIL

Engine oil level check

Check the oil level a few minutes (about five) after the engine has stopped, with the vehicle parked on level ground.

Take out engine oil dipstick A, clean it and then fully reinsert it, take it out and check that the level is between the MIN and MAX marks on the dipstick.

The range between the MIN and MAX marks corresponds to approximately 1 litre of oil.

Topping up the engine oil

If the level of the oil is close to or below the MIN mark, add oil via filler B until the MAX mark is reached.

IMPORTANT If the engine oil level after the check is over the MAX level, go to a Fiat Dealership to have the correct level restored.

IMPORTANT After adding or changing the oil, let the engine run for a few seconds and wait a few minutes after switching it off before checking the level.

Engine oil consumption

The maximum engine oil consumption is approximately 400 grams every 1,000 km.

During the initial period of usage for the vehicle, the engine is bedding in, therefore the engine oil consumption may settle down only after the first 5,000 - 6,000 km.

IMPORTANT The oil consumption depends on driving style and the conditions under which the car is used.

IMPORTANT Do not add oil with specifications other than those of the oil already in the engine.

WARNING

When the engine is hot, take care when working inside the engine compartment to avoid burns. Remember that the fan may start up if the engine is hot: this could injure you. Make sure that scarves, ties and other loose fitting garments do not get caught up in moving parts.

Used engine oil and oil filters contain substances which are harmful to the environment. To change the oil and filters, we advise you to contact a Fiat Dealership.

BRAKE FLUID

Check that the liquid is at the maximum level (the fluid level in the reservoir must not exceed the MAX mark).

If the fluid level in the tank is too low, undo reservoir cap D (see previous pages) and add the fluid described in the chapter "Technical Specifications".

Note Carefully clean the cap of the reservoir and the surrounding surface.

Take great care to ensure that impurities do not enter the reservoir when the cap is opened.

For topping-up, always use a funnel with integrated filter with mesh equal to or lower than 0.12 mm.

IMPORTANT Brake fluid is hygroscopic (i.e. it absorbs moisture). For this reason, if the car is mainly used in areas with a high degree of atmospheric humidity, the fluid should be replaced at more frequent intervals than specified in the "Scheduled Servicing Plan".

Prevent brake fluid, which is highly corrosive, from coming into contact with painted parts. Should it happen, immediately wash with water.

WARNING

Brake fluid is poisonous and highly corrosive. If contact accidentally occurs, immediately wash the affected areas with water and a neutral detergent, and then rinse thoroughly with water. Call a doctor immediately if swallowed.

WARNING

The symbol on the container indicates a synthetic brake fluid, which is different from a mineral fluid. Using a mineral-type fluid will damage the special rubber seals of the braking system beyond repair.

WASHER FLUID FOR WINDSCREEN/ REAR WINDOW/HEADLIGHTS

If the level is too low, raise reservoir cap E (see previous pages) and add the fluid described in the chapter "Technical Specifications".

WARNING

Do not travel with the windscreen washer reservoir empty: the windscreen washer is essential for improving visibility. Some commercial windscreen washer additives are flammable. The engine compartment contains hot components which may set it on fire.

ENGINE COOLANT

The coolant level must be checked when the engine is cold and must range between the MIN and MAX marks on the reservoir.

If the level is too low, undo reservoir cap F (see previous pages) and add the fluid described in the chapter "Technical Specifications".

PARAFLU UP antifreeze is used in the engine cooling system. Use the same fluid as in the cooling system when topping up. PARAFLU UP cannot be mixed with any other type of fluid. If this happens, do not start the engine; contact a Fiat Dealership.

WARNING

The cooling system is pressurised. If necessary, replace the cap with another of equivalent quality and the same specifications as the original, otherwise the efficiency of the system may be adversely affected. Do not remove the reservoir cap when the engine is hot: you risk scalding yourself.

AIR CLEANER/POLLEN FILTER/DIESEL FILTER

For filter replacement, contact a Fiat Dealership.

BATTERY

The battery does not require the electrolyte to be topped up with distilled water. A periodic check, which can be carried out at a Fiat Dealership is, however, necessary to check efficiency.

REPLACING THE BATTERY

If necessary, replace the battery with another of equivalent quality and the same specifications as the original. Follow the battery manufacturer's instructions for maintenance.

USEFUL ADVICE FOR EXTENDING THE LIFE OF YOUR BATTERY

To avoid draining your battery and make it last longer, observe the following instructions:

❒ when you park the car, ensure that the doors, tailgate and bonnet are closed properly, to prevent any roof lights from remaining on inside the passenger's compartment;

❒ switch off the internal roof lights. The car is, however, equipped with a system which switches the interior lights off automatically;

❒ do not keep accessories (e.g. sound system, hazard lights, etc.) switched on for a long time when the engine is not running;

❒ before performing any operation on the electrical system, disconnect the negative battery cable;

❒ completely tighten the battery terminals.

IMPORTANT If the charge level remains under 50% for a long time, the battery is damaged by sulphation, reducing its capacity and efficiency at start-up.

The battery will also be more at risk of freezing (this can happen as early as -10°C). Refer to the paragraph "Car inactivity" in "Starting and driving" if the car is left parked for a long time.

If, after buying the car, you wish to install electrical accessories which require permanent electrical supply (alarm, etc.) or accessories which influence the electrical supply requirements, contact a Fiat Dealership, whose qualified staff will evaluate the overall electrical consumption.

WARNING

Battery fluid is poisonous and corrosive. Avoid contact with the skin and eyes. Keep open flames away from the battery and do not use objects that might create sparks: risk of explosion and fire.

WARNING

Using the battery with insufficient fluid irreparably damages the battery and may cause an explosion.

Incorrect installation of electrical and electronic devices may cause severe damage to your car. After purchasing your car, if you wish to install any accessories (anti-theft, car phone, etc.), contact a Fiat Dealership, which will suggest the most appropriate devices for your vehicle, and will, most importantly, advise you if a higher capacity battery needs to be installed.

Batteries contain substances which are very dangerous for the environment. For battery replacement, contact a Fiat Dealership.

WARNING

If the car will be unused for an extended period of time in extremely cold weather conditions, remove the battery and store it in a heated area to prevent it from freezing.

WARNING

Always wear appropriate goggles when working on or near the battery.

WHEELS AND TYRES

Before long trips, and every two weeks, check the tyre and space-saver wheel inflation pressure (for versions/markets, where provided). Check the tyres when cold.

While driving the car, the pressure increases under standard conditions: for the correct tyre inflation pressure, see "Wheels" paragraph in the "Technical specifications" chapter.

Incorrect pressure causes abnormal tyre wear fig. 178:

A normal pressure: tread evenly worn;

B low pressure: tread particularly worn at the edges;

C high pressure: tread particularly worn in the centre.

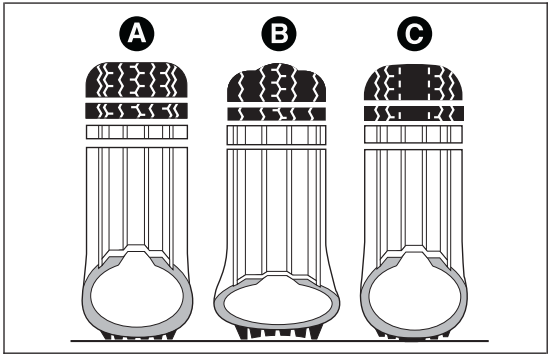

fig. 178 F0W0018

The tyres must be replaced when the tread is less than 1.6 mm thick. In any case, follow the laws in force in the country where you are driving.

IMPORTANT

Take the following precautions to prevent damage to the tyres:

- ❒ avoid braking suddenly, racing starts and violent impact against the curb, potholes or other obstacles and driving for extended periods on uneven road surfaces;
- ❒ periodically check that the tyres have no cuts in the side wall, abnormal swelling or irregular tyre wear;
- ❒ avoid travelling with the car overloaded. If you have a puncture, stop immediately and change the tyre;
- ❒ tyres age even if they are not used much. Cracks in the tread rubber and at the sides are a sign of ageing. In any case, if the tyres have been on the car for over 6 years, they should be checked by specialised personnel. Also remember to check the space-saver wheel very carefully (for versions/markets, where provided);
- ❒ change the position of the tyres every 10-15 thousand kilometres, keeping them on the same side of the car to avoid inverting the rotation direction;
- ❒ In the case of replacement, always fit new tyres, avoiding those of dubious origin;
- ❒ if a tyre is changed, also change the inflation valve.

WARNING

The road holding qualities of the car also depend on the correct inflation pressure of the tyres.

WARNING

If the pressure is too low the tyre overheats and can be seriously damaged.

WARNING

Do not cross switch the tyres, moving them from the right of the car to the left and vice versa.

WARNING

Never submit alloy rims to repainting treatments requiring the use of temperatures exceeding 150°C. The mechanical properties of the wheels could be impaired.

WINDSCREEN/REAR WINDOW WIPER

BLADES

Periodically clean the rubber part using special products; TUTELA PROFESSIONAL SC 35 is recommended.

Replace the blades if the rubber edge is deformed or worn. In any case, it is advisable to replace them approximately once a year. A few simple precautions can reduce the possibility of damage to the blades:

- ❒ if the temperature falls below zero, make sure that ice has not frozen the rubber against the glass. Use an antifreeze product to release it if required;
- ❒ remove any snow from the glass: in addition to protecting the blades, this prevents effort on the motor and overheating;
- ❒ do not operate the windscreen/rear window wipers on dry glass.

WARNING

Driving with worn windscreen/rear window wiper blades is a serious hazard, because visibility is reduced in bad weather.

Replacing the wiper blades

Proceed as follows:

❒ lift up the windscreen wiper arm and position the blade so that it forms a 90° angle with the arm;

❒ press tab A fig. 179 of the coupling spring and remove the blade to be replaced from the arm;

❒ fit the new blade by inserting the tab into the special slot in the arm. Make sure that the new blade is secured in position.

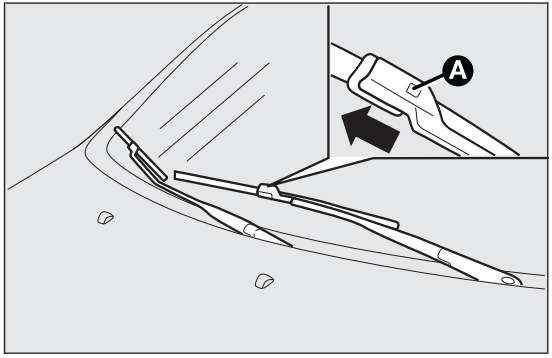

fig. 179 F0Q0662

Replacing the rear window wiper blade

Proceed as follows:

❒ raise cover A fig. 180 and remove the arm from the car undoing the nut B that fastens it to the pivot pin;

❒ correctly position the new arm and tighten the nut fully;

❒ lower the cover.

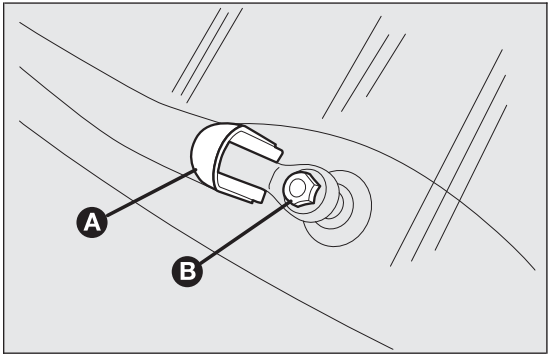

fig. 180 F0Q0663

NOZZLES

Windscreen (washer)

If the jet is not coming out, firstly check that there is fluid in the reservoir (see “Checking levels” in this chapter). Then check that the nozzle holes, marked by arrows in Fig. fig. 181, are not clogged; if necessary use a needle. The window washer nozzles are fixed.

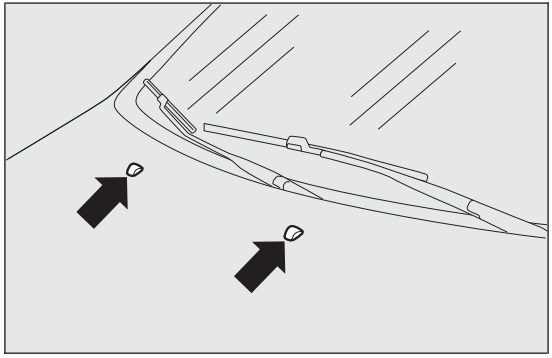

fig. 181 F0Q0661

Rear window (washer)

The rear window washer nozzles are fixed.

The nozzle holder is on the rear window fig. 182.

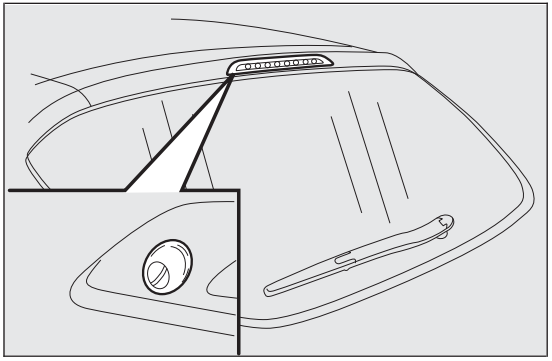

fig. 182 F0Q0660

BODYWORK

PROTECTION FROM ATMOSPHERIC AGENTS

The main causes of corrosion are the following:

❒ atmospheric pollution

❒ salty air and humidity (coastal areas, or hot humid climates);

❒ seasonal environmental conditions.

The abrasive action of wind-borne atmospheric dust and sand, as well as mud and gravel raised by other vehicles is also not to be underestimated.

On your car, Fiat has adopted the best manufacturing technologies to effectively protect the bodywork against corrosion.

These are the most important:

❒ Painting products and systems which give the car particular resistance to corrosion and abrasion;

❒ Use of galvanised (or pretreated) steel sheets, with high resistance to corrosion;

❒ spraying the underbody, engine compartment, wheel arch interiors and other parts with highly protective wax products;

❒ spraying of plastic parts, with a protective function in the more exposed points: underdoor, inner wing, edges, etc;

❒ Use of “open” boxed sections to prevent condensation and pockets of moisture from triggering rust inside.

BODY AND UNDERBODY WARRANTY

Your car is covered by warranty against perforation due to rust of any original element of the structure or body.

For the general terms of this warranty, refer to the Warranty Booklet.

ADVICE FOR PRESERVING THE BODYWORK

Paint

Paintwork does not only serve an aesthetic purpose, but also protects the underlying sheet metal.

Touch up abrasions and scratches immediately to prevent rust formation. Use only original paint products for touch-ups (see "Bodywork paint identification plate" in the "Technical specifications" section).

Normal maintenance of paintwork consists in washing the car: the frequency depends on the conditions and environment where the car is used. For example, in highly polluted areas, or if the roads are spread with salt, it is advisable to wash the car more frequently.

To correctly wash the vehicle, proceed as follows:

- ❒ remove the aerial from the roof to prevent damage to it if the car is washed in an automatic system;
- ❒ if high pressure jets or cleaners are used to wash the vehicle, keep a distance of at least 40 cm from the bodywork to avoid damage or alteration. It should be remembered that the build up of water can damage the car over a period of time;
- ❒ wash the body using a low pressure jet of water;
- ❒ wipe a sponge with a slightly soapy solution over the bodywork, frequently rinsing with the sponge;
- ❒ rinse well with water and dry with a jet of air or a chamois leather.

Dry the less visible parts particularly carefully, such as the door frames, bonnet and the headlight frames, where water may stagnate more easily. The car should not be taken to a closed area immediately, but left outside so that residual water can evaporate.

Do not wash the car after it has been left in the sun or with the bonnet hot: this may alter the shine of the paintwork.

External plastic parts must be cleaned in the same way as the rest of the car.

Where possible, do not park under trees; the resinous substance that many species release give the paint a dull appearance and increase the possibility of triggering rusting processes.

IMPORTANT Bird droppings must be washed off immediately and thoroughly as the acid they contain is particularly aggressive.

Detergents pollute the environment. Therefore the engine compartment should be washed in areas equipped for collecting and purifying the liquid used in the washing process.

Glasses

To clean glasses, use specific window cleaner products.

Also use clean cloths to avoid scratching the glass or damaging the transparency.

IMPORTANT Wipe the rear window inside gently with a cloth in the direction of the filaments to avoid damaging the heating device.

Engine compartment

IMPORTANT The washing should take place with the engine cold and the ignition key in the STOP position. After the washing operation, make sure that the various protections (e.g. rubber caps and guards) have not been removed or damaged.

Front headlights

IMPORTANT Never use aromatic substances (e.g. petrol) or ketenes (e.g. acetone) for cleaning the plastic lenses of the front headlights.

INTERIORS

Periodically check for water puddles under the mats that could cause the panels to rust.

Replace the worn carpet mats, if present, with genuine products and make sure they remain securely fastened to the passenger compartment carpet. It is not advisable to use non genuine mats that could move whilst driving.

WARNING

Never use flammable products, such as petrol ether or rectified petrol to clean the inside of the car. The electrostatic charges which are generated by rubbing during the cleaning operation may cause a fire.

WARNING

Do not keep aerosol cans in the car: they might explode. Aerosol cans must not be exposed to a temperature exceeding 50°C. When the car is exposed to sunlight, internal temperature can greatly exceed this value.

SEATS AND FABRIC PARTS

Remove dust with a soft brush or a vacuum cleaner.

Rub the seats with a sponge and a solution of water and mild soap.

LEATHER SEATS

Remove the dry dirt with a buckskin or slightly damp cloth, without exercising too much pressure. Remove any liquid or grease stains using an absorbent dry cloth, without rubbing. Then clean with a soft cloth or buckskin cloth dampened with water and neutral soap.

If the stain persists, use specific products and observe the instructions carefully.

IMPORTANT Never use alcohol. Make sure that the cleaning products used contain no alcohol or alcohol derivatives, even in small quantities.

The fabric upholstery of your car has been designed to withstand wear deriving from common use of the car. You are however recommended to avoid strong and/or continuous scratching with clothing accessories such as metal buckles, studs, Velcro fastenings and the like, as these items cause stress of the cover fabric that could lead to yarn breaking and damage the upholstery.

PLASTIC AND COATED PARTS

Clean interior plastic parts with a damp cloth (if possible made from microfibre), and a solution of water and neutral, non-abrasive detergent. To clean oily or persistent stains, use specific products free from solvents and designed to maintain the original appearance and colour of the components.

Remove any dust using a microfibre cloth, if necessary moistened with water. The use of paper tissues is not recommended as these may leave residues.

IMPORTANT Never use alcohol, petrols and derivatives to clean the instrument panel lens.

LEATHER STEERING WHEEL/GEAR KNOB/HANDBRAKE

These components must be cleaned with mild soap and water only. Never use alcohol or alcohol-based products.

Read the product label carefully before using specific products for cleaning the interiors: make sure the product does not contain alcohol or alcohol-based substances.

If, when cleaning the windscreen with special products, window cleaner accidentally drips onto the leather of the steering wheel/gear lever knob/hand brake, wipe away immediately and then wash the affected area with mild soap and water.

IMPORTANT Be careful when using a steering wheel lock device, where applicable, to avoid damaging the leather upholstery by rubbing.

IDENTIFICATION DATA

The identification data of the car are:

❒ VIN plate;

❒ Chassis marking;

❒ Bodywork paint identification plate;

❒ Engine marking.

VIN PLATE

This plate is fitted to the engine compartment front crossmember and contains the following data fig. 183:

B Type-approval number.

C Vehicle type identification code.

D Chassis serial number.

E Maximum authorised weight of vehicle fully laden.

F Maximum authorised weight of vehicle fully laden plus trailer.

G Maximum authorised weight on first (front) axle.

H Maximum authorised weight on second (rear) axle.

I Engine type.

L Bodywork version code.

M Number for spare parts.

N Correct value of smoke coefficient (for diesel engines).

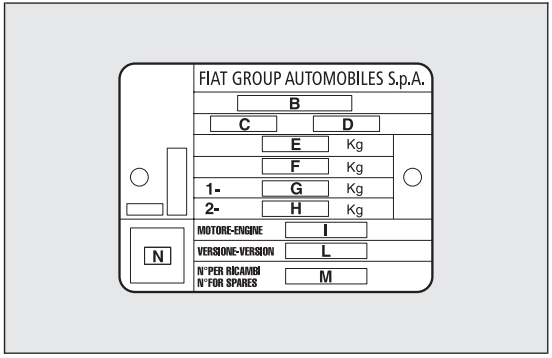

fig. 183 F0Q0029

CHASSIS MARKING

This is printed on the passenger compartment floor, near the front right seat.

Slide flap A fig. 184 forward to access:

The marking includes:

❒ car model (ZFA 198000);

❒ chassis serial number.

BODYWORK PAINT IDENTIFICATION PLATE

This is fitted to the inside of the tailgate and bears the following data fig. 185:

A Paint manufacturer.

B Colour name.

C Fiat colour code.

D Respray and touch up code.

ENGINE MARKING

This is stamped on the cylinder block and gives the model and the chassis serial number.

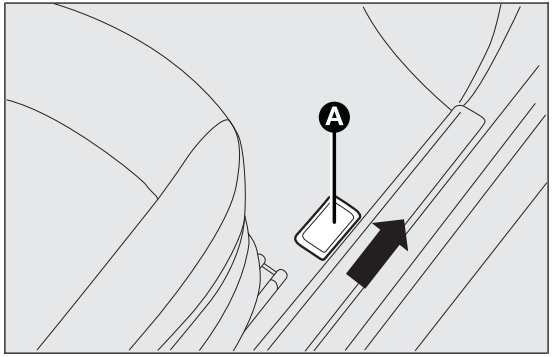

fig. 184 F0Q0667

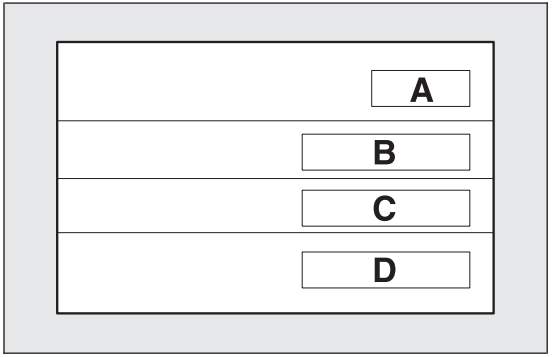

fig. 185 F0Q0100

ENGINE CODE - BODYWORK VERSIONS

Versions	Engine code	Bodywork versions
1.6 MultiJet 105 HP	844A3000	198AXV1B 18
		198AXV1B 18B (*)
1.6 MultiJet 120 HP	198A2000	198AXL1B 08M
		198AXL1B 08N (*)
2.0 MultiJet 165 HP (**)	198A8000	198AXT1B 16
		198AXT1B 16B (*)

(*) Versions where 18" tyres can be fitted
(**) For versions/markets, where provided

ENGINE

	1.6 MultiJet 105 HP	1.6 MultiJet 120 HP
Type code	844A3000	198A2000
Cycle	Diesel	Diesel
Number and arrangement of cylinders	4 in line	4 in line
Piston bore and stroke (mm)	79.5 × 80.5	79.5 × 80.5
Total displacement (cm³)	1598	1598
Compression ratio	16,5	16,5
Maximum power (EC) (kW)	77	88
Maximum power (EC) (HP)	105	120
corresponding engine speed (rpm)	4000	4000
Maximum torque (EC) (Nm)	300	300
Maximum torque (EC) (kgm)	30,6	30,6
corresponding engine speed (rpm)	1500	1500
Fuel	Diesel for automotive engines (Specification EN590)	

	2.0 MultiJet 165 HP (*)
Type code	198A8000
Cycle	Diesel
Number and arrangement of cylinders	4 in line
Piston bore and stroke (mm)	83.0 x 90.4
Total displacement (cm³)	1956
Compression ratio	16,5
Maximum power (EC) (kW)	121
Maximum power (EC) (HP)	165
corresponding engine speed (rpm)	4000
Maximum torque (EC) (Nm)	350
Maximum torque (EC) (kgm)	35,6
corresponding engine speed (rpm)	1750
Fuel	Diesel for automotive engines (Specification EN590)

(*) For versions/markets, where provided

FUEL SUPPLY

Versions	Fuel supply
1.6 MultiJet - 2.0 MultiJet	Electronically controlled Common Rail MultiJet direct injection with turbo and intercooler

WARNING

Modifications or repairs to the fuel supply system that are not carried out correctly or do not take the system's technical specifications into account can cause malfunctions leading to the risk of fire.

TRANSMISSION

Versions	Gearbox	Clutch	Drive
1.6 MultiJet - 2.0 MultiJet	Six forward gears plus reverse with synchronisers for forward gear engagement	Self-adjusting with pedal without idle stroke	Front

BRAKES

Versions	Front service brakes	Rear service brakes	Parking brake
1.6 MultiJet - 2.0 MultiJet	Self-ventilated disc	Disc	Controlled by hand lever, acting on the rear brakes

IMPORTANT Water, ice and salt spread on the roads may deposit on the brake discs reducing braking efficiency the first time the brakes are applied.

SUSPENSION

Versions	Front	Rear
1.6 MultiJet - 2.0 MultiJet	MacPherson independent wheels with anti-roll bar	Interconnected wheels with torsion beam

STEERING SYSTEM

Versions	Type	Turning circle (kerb to kerb) (m)
1.6 MultiJet - 2.0 MultiJet	Rack and pinion with electric power steering	10.4 (11.0 with optional 18" alloy rims)

WHEELS

RIMS AND TYRES

Pressed steel or alloy rims. Tubeless radial carcass tyres. The vehicle registration document also lists all type-approved tyres.

IMPORTANT If there are any discrepancies between the Owner Handbook and the registration document, take the information from the latter. For safe driving, the car must be fitted with tyres of the same make and type on all wheels.

IMPORTANT Do not use air chambers with Tubeless tyres.

SPARE WHEEL

Pressed steel rim. Tubeless tyre.

WHEEL GEOMETRY

Front wheel toe-in measured from rim to rim:
- 1 mm +/- 1 mm

The values refer to the car in running order.

CORRECT TYRE READING

Example fig. 186: 195/55 R 16 91V

195 Nominal width (S, distance in mm between sidewalls)

55 Height/width ratio (H/S) as a percentage

R Radial tyre

16 Rim diameter in inches (Ø)

91 Load rating (capacity)

V Maximum speed rating

Maximum speed rating

Q up to 160 km/h
R up to 170 km/h
S up to 180 km/h
T up to 190 km/h
U up to 200 km/h
H up to 210 km/h
V up to 240 km/h
W up to 270 km/h
Y up to 300 km/h

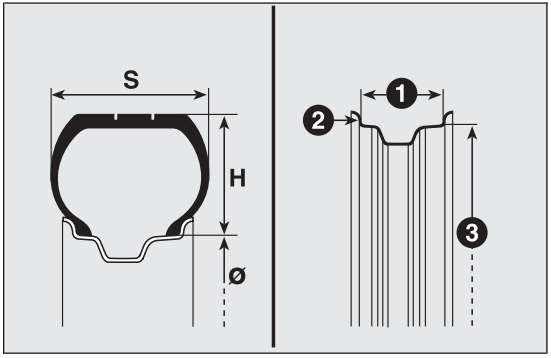

fig. 186 F0Q0200

Maximum speed index for snow tyres

QM + S up to 160 km/h

TM + S up to 190 km/h

HM + S up to 210 km/h

Load rating (capacity)	
60 = 250 kg	**84** = 500 kg
61 = 257 kg	**85** = 515 kg
62 = 265 kg	**86** = 530 kg
63 = 272 kg	**87** = 545 kg
64 = 280 kg	**88** = 560 kg
65 = 290 kg	**89** = 580 kg
66 = 300 kg	**90** = 600 kg
67 = 307 kg	**91** = 615 kg
68 = 315 kg	**92** = 630 kg
69 = 325 kg	**93** = 650 kg
70 = 335 kg	**94** = 670 kg
71 = 345 kg	**95** = 690 kg
72 = 355 kg	**96** = 710 kg
73 = 365 kg	**97** = 730 kg
74 = 375 kg	**98** = 750 kg
75 = 387 kg	**99** = 775 kg
76 = 400 kg	**100** = 800 kg

Load rating (capacity)	
77 = 412 kg	**101** = 825 kg
78 = 425 kg	**102** = 850 kg
79 = 437 kg	**103** = 875 kg
80 = 450 kg	**104** = 900 kg
81 = 462 kg	**105** = 925 kg
82 = 475 kg	**106** = 950 kg
83 = 487 kg	

CORRECT READING OF THE WHEEL RIM

Example fig. 186: 7 J x 16 ET 31

7 rim diameter in inches (1).

J rim drop centre outline (side projection where the tyre bead rests) (2).

16 rim nominal diameter in inches (corresponds to diameter of the tyre to be mounted) (3 = Ø).

H2 shape and number of humps (circumference measurement which keeps the bead of Tubeless tyres in position on the rim).

ET 31 wheel camber (distance between the disc/rim support plane and the wheel centre line).

RIMS AND TYRES PROVIDED AS STANDARD

Version	Rims	Tyres	Snow tyres	Spare wheel	
				Rim	Tyre
1.6 MultiJet 105 HP	6J x 15 ET 31.5 (**)	195/65 R15 91H (**)	195/65 R15 91T (M+S) (**)	(***)	(***)
	7J x 16 ET 31	205/55 R16 91H	205/55 R16 91T (M+S)		
	7J x 17 ET 26	225/45 R17 91W	225/45 R17 91T (M+S)	7J x 16 ET 31	205/55 R16 91H 205/55 R16 91V (****)
	7J x 17 ET 31	225/45 R17 91W	225/45 R17 91T (M+S)		
	7 1/2J x 18 ET 35	225/40 R18 92V REINFORCED (*****)	225/40 R18 92T (M+S)		

(**) For versions/markets, where provided

(***) On versions equipped with 195/65 R15 and 205/55 R16 tyres, a normal sized tyre may be ordered as an alternative to the Fix&Go.

(****) The 205/55 R16 91H (or 205/55 R16 91V) tyre has the same specifications as the space-saver wheel: the information in the "Replacing a wheel" paragraph therefore refers to the 205/55 R16 91H (or 205/55 R16 91V) tyre.

(*****) Tyres which cannot be fitted with chains.

Version	Rims	Tyres	Snow tyres	Spare wheel	
				Rim	Tyre
1.6 MultiJet 120 HP	7J x 16 ET 31	195/55 R16 91V	195/55 R16 91T (M+S)	(***)	(***)
	7J x 16 ET 31	205/55 R16 91V	205/55 R16 91T (M+S)		
	7J x 17 ET 31	225/45 R17 91W	225/45 R17 91T (M+S)	7J x 16 ET 31	205/55 R16 91H 205/55 R16 91V (****)
	7 1/2J x 18 ET 35	225/40 R18 92W REINFORCED (*****)	225/40 R18 92T (M+S)		

(***) On versions equipped with 195/55 R16 and 205/55 R16 tyres, a normal sized tyre may be ordered as an alternative to the Fix&Go.

(****) The 205/55 R16 91H (or 205/55 R16 91V) tyre has the same specifications as the space-saver wheel: the information in the "Replacing a wheel" paragraph therefore refers to the 205/55 R16 91H (or 205/55 R16 91V) tyre.

(*****) Tyres which cannot be fitted with chains.

Version	Rims	Tyres	Snow tyres	Spare wheel	
				Rim	Tyre
2.0 MultiJet 165 HP	7J x 16 ET 31	195/55 R16 91V	195/55 R16 91T (M+S)	(***)	(***)
	7J x 16 ET 31	205/55 R16 91V	205/55 R16 91T (M+S)		
	7J x 17 ET 26	225/45 R17 91W	225/45 R17 91T (M+S)	7J x 16 ET 31	205/55 R16 91H 205/55 R16 91V (****)
	7J x 17 ET 31	225/45 R17 91W	225/45 R17 91T (M+S)		
	7 1/2J x 18 ET 35	225/40 R18 92W REINFORCED (*****)	225/40 R18 92T (M+S)		

(***) On versions equipped with 195/55 R16 and 205/55 R16 tyres, a normal sized tyre may be ordered as an alternative to the Fix&Go.

(****) The 205/55 R16 91H (or 205/55 R16 91V) tyre has the same specifications as the space-saver wheel: the information in the "Replacing a wheel" paragraph therefore refers to the 205/55 R16 91H (or 205/55 R16 91V) tyre.

(*****) Tyres which cannot be fitted with chains.

SPACE-SAVER WHEEL (for versions/markets, where provided)

Rim: 4B x 15H ET 35

Tyre: T125/90 R15 96M

IMPORTANT Special techniques need to be adopted for 225/40 R18 92W tyres. For this reason, these tyres can only be requested when the vehicle is purchased. Do not fit this tyre after the vehicle has been purchased!

TYRE INFLATION PRESSURE WHEN COLD (bar)

Tyres	Unladen/medium load		Full load		Space-saver wheel (*)
	Front	Rear	Front	Rear	
195/65 R15 91H (*)	2,3	2,3	2,6	2,6	4,2
195/55 R16 91V	2,3	2,3	2,6	2,6	
205/55 R16 91H	2.3	2.3	2.6	2.6	
205/55 R16 91V	2.3	2.3	2.6	2.6	
225/45 R17 91W	2.3	2.3	2.6	2.6	
225/40 R18 92W	2,6	2,6	2,9	2,9	

(*) For versions/markets, where provided

Add +0.3 bar to the prescribed pressure when the tyres are warm.

Recheck pressure value with cold tyres. With snow tyres, add +0.2 bar to the pressure value prescribed for standard tyres.

When travelling at speeds above 160 km/h, inflate the tyres to the values specified for fully laden conditions.

DIMENSIONS

Dimensions are expressed in mm fig. 187 and refer to the vehicle equipped with its original tyres. Height is measured with car unladen.

LUGGAGE COMPARTMENT CAPACITY Capacity with car unladen (VDA standards): 400 dm^3 with cargo box (for versions/markets, where provided). Capacity with rear seat backrest folded down: 1175 dm^3 with cargo box (for versions/markets, where provided).

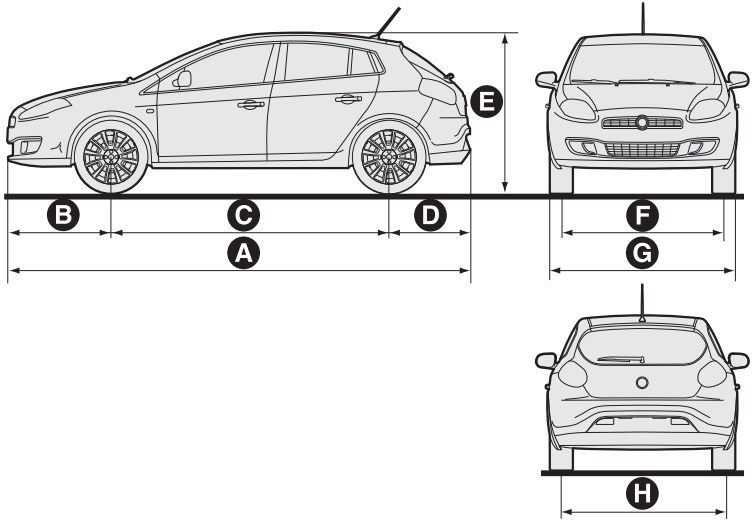

fig. 187

F0Q0003

A	B	C	D	E	F (*)	G	H(*)
4336	974	2600	762	1498	1538	1792	1532

(*) Small variations in size are possible depending on the dimensions of the rims.

PERFORMANCE

Max. speed in km/h that can be reached after initial car use.

Versions	km/h
1.6 MultiJet 105 HP	187 (*)
1.6 MultiJet 120 HP	194
2.0 MultiJet 165 HP (**)	215

(*) Top speed in sixth gear
(**) For versions/markets, where provided

WEIGHTS

Weights (kg)	1.6 MultiJet	2.0 MultiJet(*)
Unladen weight (with all fluids, fuel tank filled to 90% and without optional equipment)	1320	1360
Payload including the driver: (**)	510	510
Maximum permitted loads: (***)		
– front axle:	1060	1060
– rear axle:	860	860
– total:	1830	1870
Towable loads		
- braked trailer:	1300	1300
- non-braked trailer:	500	500
Maximum load on roof: (****)	80	80
Maximum load on ball joint (braked trailer):	60	60

(*) For versions/markets, where provided

(**) If special equipment is fitted (sun roof, tow hook, etc.) the unladen car weight increases, thus reducing the specified payload with respect to the maximum permitted loads.

(***) Loads not to be exceeded. The user is responsible for arranging goods in the luggage compartment and/or load platform within the maximum permitted loads.

(****) Lineaccessori Fiat roof rack bars, max capacity: 50 kg.

REFUELLING

	1.6 MultiJet	2.0 MultiJet (*)	Prescribed fuels and original lubricants
Fuel tank (litres):	58	58	Diesel for motor vehicles (EN 590 Specification)
including a reserve of (litres):	8 ÷ 10	8 ÷ 10	
Engine cooling system (litres):	7,1	7,1	Mixture of demineralised water and 50% PARAFLU UP (**)
Engine sump (litres):	4,3	4,3	SELENIA WR FORWARD
Engine sump and filter (litres):	4,6	4,9	
Gearbox/differential casing (litres):	1,87	1,87	TUTELA TRANSMISSION GEARFORCE
Hydraulic brake circuit with ABS:	0,56	0,56	TUTELA TOP 4
Windscreen and rear window washer fluid reservoir (litres):	3 (6)	3 (6)	Mixture of water and TUTELA PROFESSIONAL SC35

(**) For particularly harsh climate conditions, a mixture of 60% PARAFLU UP and 40% demineralised water is recommended.

(*) For versions/markets, where provided

FLUIDS AND LUBRICANTS

Your car is equipped with an engine oil that has been thoroughly developed and tested in order to meet the requirements of the Scheduled Servicing Plan. Constant use of the prescribed lubricants guarantees the fuel consumption and emission specifications. Lubricant quality is crucial for engine operation and duration.

PRODUCT SPECIFICATIONS

Use	Fluid and lubricant specifications for a correct use of the car	Genuine fluids and lubricants	Replacement interval
Lubricant for diesel engines	SAE 0W-30 grade fully synthetic lubricant. FIAT 9.55535-DS1, ACEA C2 classification.	**SELENIA WR FORWARD** Contractual Technical Reference No. F842.F13	According to Scheduled Servicing Plan

In case of emergency, if lubricants with the prescribed specifications are not available, products with the minimum indicated ACEA performance can be used for topping up; in this case optimal performance of the engine is not guaranteed.

The use of products with different specifications than those indicated above could cause damage to the engine that is not covered by the warranty.

Use	Fluid and lubricant specifications for a correct use of the car	Genuine fluids and lubricants	Applications
Lubricants and greases for drive transmission	SAE 75W grade synthetic lubricant. FIAT 9.55550-MZ6 classification	**TUTELA TRANSMISSION GEARFORCE** Contractual Technical Reference No. F002.F10	Manual gearboxes and differentials
	Molybdenum disulphide grease, for use at high temperatures. NL.G.I. 1-2 consistency. FIAT Classification 9.55580	**TUTELA ALL STAR** Contractual Technical Reference No. F702.G07	Wheel side constant velocity joints
	Grease for constant velocity joints with low friction coefficient. NL.G.I. 0-1 consistency. FIAT Classification 9.55580	**TUTELA STAR 700** Contractual Technical Reference No. F701.C07	Differential side constant velocity joints
Brake fluid	Synthetic fluid for brake and clutch systems. Exceeds specifications: FMVSS no. 116 DOT 4, ISO 4925 SAE J1704. FIAT Classification 9.55597	**TUTELA TOP 4** Contractual Technical Reference No. F001.A93	Hydraulic brakes and hydraulic clutch controls

Use	Fluid and lubricant specifications for a correct use of the car	Genuine fluids and lubricants	Applications
Protective agent for radiators	Red protective agent with antifreeze action, based on inhibited monoethylene glycol with organic formula. Exceeds CUNA NC 956-16, ASTM D 3306 specifications. FIAT 9.55523 classification	**PARAFLU^{UP}** (*) Contractual Technical Reference No. F101.M01	Cooling circuit usage percentage: 50% demineralised water 50% **PARAFLU^{UP}** (**)
Additive for diesel	Additive for diesel with antifreeze and protective action for diesel engines	**TUTELA DIESEL ART** Contractual Technical Reference No. F601.L06	To be mixed with diesel (25 cc per 10 litres)
Windscreen/ rear window washer fluid	Mixture of alcohols and surfactants. Exceeds CUNA NC 956-11 specifications. FIAT Classification 9.55522	**TUTELA PROFESSIONAL SC 35** Contractual Technical Reference No. F201.D02	To be used diluted or undiluted in windscreen/ rear window washer/wiper systems

(*) IMPORTANT Do not use fluids with different specifications for topping up or mixing.
(**) For particularly harsh climate conditions, a mixture of 60% **PARAFLU^{UP}** and 40% demineralised water is recommended.

FUEL CONSUMPTION

The fuel consumption figures given in the table below are determined on the basis of the type-approval tests laid down by specific European Directives.

The procedures below are followed for measuring consumption:

❒ urban cycle: cold starting followed by driving that simulates urban use of the car;

❒ extra-urban cycle: frequent accelerating in all gears, simulating extra-urban use of the car: speed varies between 0 and 120 km/h;

❒ combined fuel consumption: calculated with a weighting of approximately 37% of the urban cycle and 63% of the extra-urban cycle.

IMPORTANT The type of route, traffic conditions, weather conditions, driving style, general condition of the car, trim level/equipment/accessories, use of the climate control system, car load, presence of roof racks and other situations that adversely affect the aerodynamics or wind resistance lead to different fuel consumption values than those measured.

FUEL CONSUMPTION ACCORDING TO THE CURRENT EUROPEAN DIRECTIVE (litres/100 km)

Versions	Urban	Extra-urban	Combined
1.6 MultiJet 105 HP	5,3	3,7	4,3
1.6 MultiJet 120 HP	5,6	3,8	4,5
2.0 MultiJet (*)	6,7	4,2	5,1

(*) For versions/markets, where provided

CO_2 EMISSIONS

The CO_2 emission levels given in the following table refer to combined consumption.

Versions	CO_2 emissions according to the current European directive (g/km)
1.6 MultiJet 105 HP	113
1.6 MultiJet 120 HP	117
2.0 MultiJet (*)	135

(*) For versions/markets, where provided

OFFICIAL TYPE APPROVALS

EMCC™ DR. RAŠEK

Notified Body Directive 99/5/EC
Competent Body EMC Directive 89/336/EEC
Notified Body EMC Directive 89/336/EEC
FCB under the Canada-EC MRA
TCB under the USA-EC MRA

EC Identification No. 0678

Designated by the German Regulator RegTP

to act as a Notified Body in accordance with the R&TTE Directive 1999/5/EC of 9. March 1999

EC-R&TTE CERTIFICATE

Registration No.	G102952U
Certificate Holder	MAGNETI MARELLI SISTEMI ELETTRONICI SpA Via Aldo Borletti, 61/63 20011 Corbetta (MI) Italy
Product Designation	TRF 192.02, TRF 841.02, TRF S20.02
Product Description	Low Power Device
Manufacturer	MAGNETI MARELLI SISTEMI ELETTRONICI SpA Via Aldo Borletti, 61/63 20011 Corbetta (MI) Italy

Essential Requirement		Applied Specifications / Standards	Documentary Evidence	Result
Art. 3.1(a)	Health	Not assessed		
Art. 3.1(a)	Safety	EN 60950	Declaration of Conformity	conform
Art. 3.1(b)	EMC	EN 301 489-1/-3	Test Report E20471 Edition 2	conform
Art. 3.2	Radio	EN 300 220-1/-3	Test Report R20471 Edition 2	conform

The product shall be marked with the CE conformity marking and our Notified Body number as shown on the right.

CE 0678

The scope of evaluation relates to the submitted documents only.

This Certificate is issued in accordance with Annex IV of the R&TTE Directive 1999/5/EC of 9th March, 1999 and is only valid in conjunction with the attached Annex.

Ebermannstadt,
2006-05-23

Eddo de Bunk
Notified Body

GERMAN NOTIFIED BODY · DEUTSCHE BENANNTE STELLE

EMCCert DR. RAŠEK GmbH • Moggast, Boelwiese 5, 91320 Ebermannstadt, Germany
Tel.: +49-9194-9016 • Fax: +49-9194-8125 • E-mail: emc.cert@emcc.de • Web: www.emcc.de

EMCC™
DR. RAŠEK

Notified Body Directive 99/5/EC
Competent Body EMC Directive 89/336/EEC
Notified Body EMC Directive 89/336/EEC
FCB under the Canada-EC MRA
TCB under the USA-EC MRA

EC Identification No. 0678

Designated by the German Regulator RegTP

to act as a Notified Body in accordance with the R&TTE Directive 1999/5/EC of 9. March 1999

EC-R&TTE CERTIFICATE

Registration No.	G103345U
Certificate Holder	Magneti Marelli Sistemi Elettronici S.p.A. Viale A. Borletti, 61/63 20011 Corbetta (MI) Italy
Product Designation	Electronic immobilizer, Model NBC 198L4
Product Description	Electronic immobilizer with inductive transponder at 125 kHz
Manufacturer	Magneti Marelli Sistemi Elettronici S.p.A. Viale A. Borletti, 61/63 20011 Corbetta (MI) Italy

Essential Requirement		Applied Specifications / Standards	Documentary Evidence	Result
Art. 3.1(a)	Health	Not assessed		
Art. 3.1(a)	Safety	74/61/EEC, 95/56/EC	Test Report 55 00106 06	conform
Art. 3.1(b)	EMC	72/245/ECC, 2006/28/EC	Test Report 55 00106 06	conform
Art. 3.2	Radio	EN 300 330-1/-2	Test Report R06115801	conform

The product shall be marked with the CE conformity marking and our Notified Body number as shown on the right.

CE 0678

The scope of evaluation relates to the submitted documents only.

This Certificate is issued in accordance with Annex IV of the R&TTE Directive 1999/5/EC of 9th March, 1999 and is only valid in conjunction with the attached Annex.

Ebermannstadt,
2006-11-24

Klaus Knörig
Notified Body

GERMAN NOTIFIED BODY · DEUTSCHE BENANNTE STELLE

EMCCert DR. RAŠEK GmbH • Moggast, Boxwiese 5, 91320 Ebermannstadt, Germany
Tel.: +49-9194-9016 • Fax: +49-9194-8125 • E-mail: emc.cert@emcc.de • Web: www.emcc.de

page intentionally left blank

DASHBOARD

The presence and the position of the instruments and warning lights may vary according to the versions.

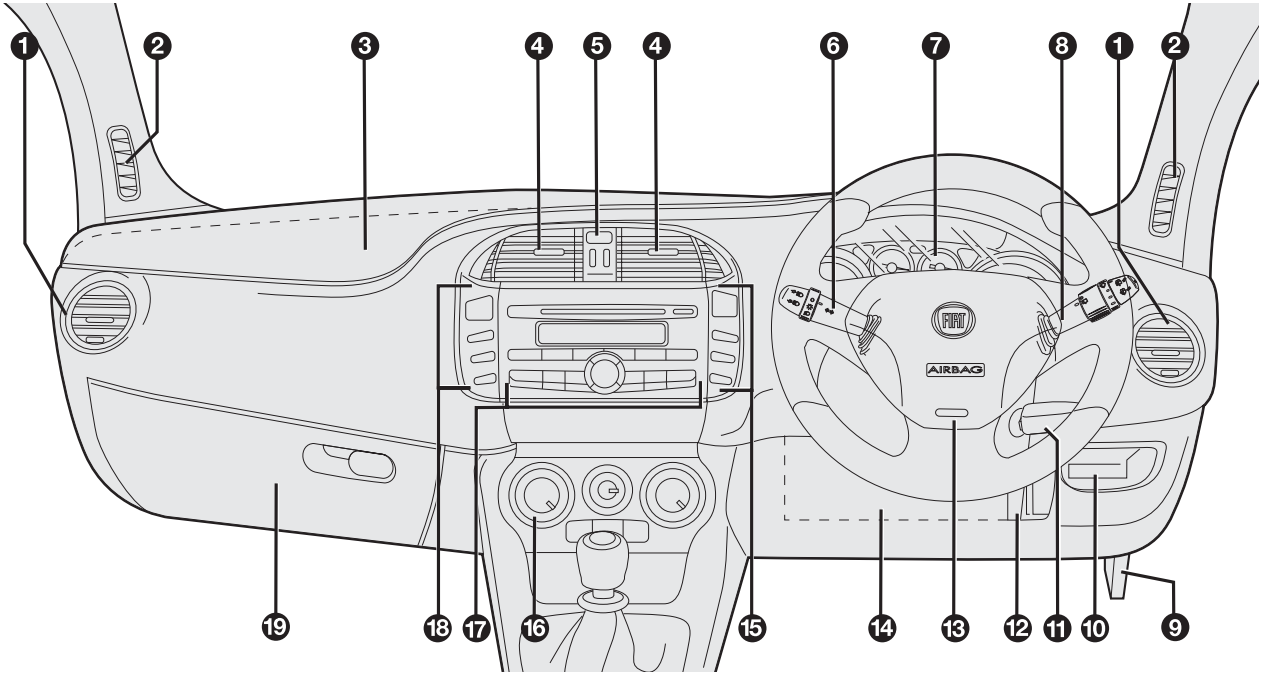

fig. 1 F0Q0005

1. Adjustable and swivel air vent - 2. Side window air vent - 3. Front passenger air bag - 4. Adjustable and swivel air vents - 5. Hazard light switch - 6. External light stalk - 7. Instrument panel - 8. Windscreen/rear window wiper/trip computer stalk - 9. Bonnet opening lever - 10. Glovebox - 11. Ignition key and ignition device - 12. Steering wheel locking/release stalk - 13. Driver's air bag - 14. Driver's knees air bag (for versions/markets, where provided) - 15. Set of switches for front/rear fog lights and menu opening/setting - 16. Controls for heating/ventilation/climate control - 17. Sound system controls - 18. Set of ON/OFF switches for electric power steering and ASR system (for versions/markets, where provided) - 19. Oddment compartment

INSTRUMENT PANEL

A. Speedometer (speed indicator) B. Fuel level gauge with reserve warning light C. Engine coolant temperature gauge and

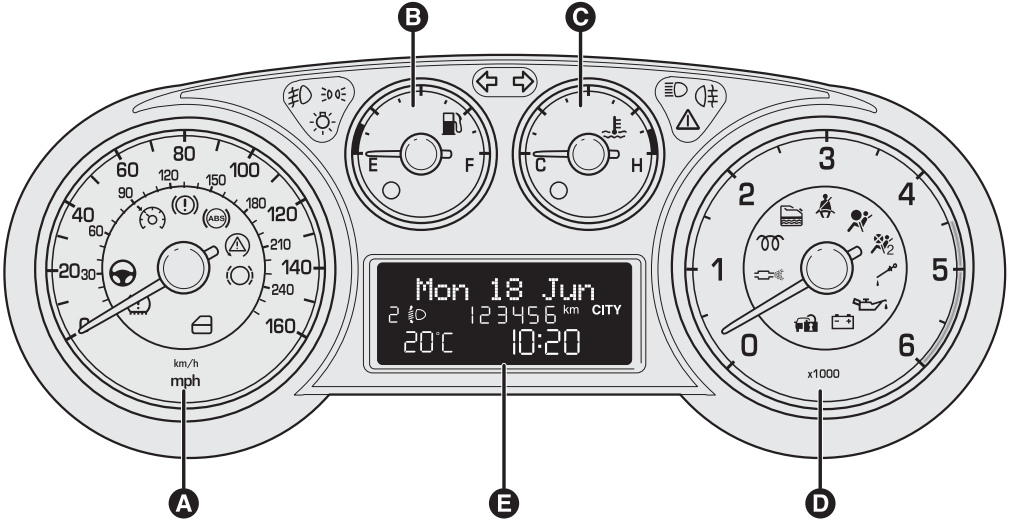

fig. 2 F0Q0911

excessive temperature warning light D. Rev counter E. Display

PETRONAS SELENIA MOTOR OIL

In the heart of your engine.

Always ask your mechanic for PETRONAS SELENIA MOTOR OIL

Oil change? The experts recommend Petronas Selenia

The engine of your car is factory filled with ***Petronas Selenia****, This is an engine oil range which satisfies the most advanced international specifications. Its superior technical characteristics allow* ***Petronas Selenia*** *to guarantee the* ***highest performance and protection of your engine.***

The Petronas Selenia range includes a number of technologically advanced products:

SELENIA K PURE ENERGY
Fully synthetic lubricant designed for latest generation, low emission, petrol engines. Its specific formulation warrants the utmost protection also for high performance turbocharged engines with high thermal stress.
Its low ash content helps to maintain the total cleanliness of modern catalysts.

SELENIA WR PURE ENERGY
Fully synthetic lubricant that can meet the requirements of the latest diesel engines. Low ash content to protect the particulate filter from the residual products of combustion.
High Fuel Economy System that allows considerable fuel saving.
It reduces the danger of dirtying the turbine to ensure the protection of increasingly high performance diesel engines.

SELENIA MULTIPOWER GAS PURE ENERGY
Fully-synthetic lubricant designed for petrol engines also turbocharged, powered with methane or LPG. Its exclusive formulation improves valve protection against wear, neutralises the acid compounds formed by combustion and keeps engine performance levels unchanged.

SELENIA K POWER
Fully synthetic lubricant developed for American design petrol engines, specially formulated to allows an excellent resistance to oxidation and high level fuel economy.
Excellent protection at high temperatures.

SELENIA DIGITEK PURE ENERGY
Fully synthetic lubricant for petrol engines. High fuel economy characteristics. Specific formulation for the TwinAir two-cylinder engines, Selenia Digitech Pure Energy allows maximum protection of the engine even under high mechanical stress caused by severe stop and go conditions of city traffic.

The range also includes Selenia K, Selenia 20K, Selenia Turbo Diesel, Selenia Sport, Selenia Sport Power, Selenia Racing.
For further information on Petronas Selenia products visit the web site www.pli-petronas.eu

---

NOTES

INDEX

ABS (system) 89
Accessories purchased by the owner 96
Activation/Deactivation (CITY function) 97
Activation of internal air recirculation and enablement of AQS function (Air Quality System) 49
Additional heater 41-45-51
Adjustable side vents and diffusers 37
Air cleaner 212
Air distribution selection 50
Alarm 14
Anti-pinch safety device 74
Ashtray 70
ASR (system) 93
Automatic dual zone climate control system 46
Automatic headlight sensor (dusk sensor) 54
Automatic operation of the climate control system (AUTO function) 47
Battery 212
– advice for extending lifetime 212
– replacement 212
Battery (recharging) 198
Bodywork
– maintenance 220
– protection against atmospheric agents 219
– warranty 219
Bonnet 85
Brake Assist 91
Brake fluid 210
Brakes
– specifications 231
Bulb replacement 180-182
Bulb replacement
– exterior lights 177
– interior lights 184
Bulbs
– bulbs (replacement) 174
– general instructions 174
– types of bulbs 175
Capacities 242
Car dimensions 239
Cargo Box 85
Carrying children safely 116
– child restraint systems 124
– "Isofix" child restraint system setup 122
Central diffusers 37
Central locking 75
Changing a wheel 162
Checking fluid levels 206
Child lock device 75
Child restraint systems (compliance for use) 121
Cigar lighter 69
Cleaning and maintenance
– bodywork 219
– car interior 222
– engine compartment 221
– front headlights 221
– Plastic and coated parts 223
– seats 222-223
– windows 221
Climate control/heating system 36

Climate control system compressor activation/deactivation 50
Clutch 230
CO2 emissions 247
CODE Card 8
Control buttons (display) 18
Control panel and instruments 4
Controls 39-42-47-63-78
Courtesy mirror lights
– bulb replacement 187
Cruise Control 59

Dashboard 3
Description 47
Diesel filter 212
Diffusers 37
Dipped headlights 52
– bulb replacement 177
Direction indicators 53
– bulb replacement 179
Display 17
Door mirrors 34
Doors 75
DPF (Diesel Particulate Filter) 109
Driver front airbag 127
Driver's side knee bag 130
"Dualdrive" electric power steering system 97

EBD (system) 90
Electric windows 77
Emergency manoeuvre 74
Engine code - bodywork versions 227
Engine compartment
– opening/closing 85
– washing 221
Engine coolant 211
Engine coolant temperature indicator 6
Engine
– marking 226
– technical data 228
Engine oil
– Consumption 209
– Level check 209
– specifications 243
EOBD system 95
ESP (system) 91
ESP system 91
Exterior lights 52

Failure indications 98
Fan speed adjustment 41-44-48
Fast front window demisting/defrosting 40-43
Fiat CODE (system) 7
Fiat CODE system 7
Fitting "Universal" child restraint system 118
Fix&Go Automatic Kit 169
Flashing 52
Fluids and lubricants (specifications) 243
Fog lights 63-180
"Follow me home" device 53

Front airbags 126
Front armrest 66
Front light clusters (changing a bulb) 177
Front roof light
– bulb replacement 184
Front roof light with spot lights 61
Fuel cut-off switch 64
Fuel cut-off system 65
Fuel
– saving fuel 139

Fuel level gauge 5
Fuel supply..... 230
Fuse boxes (location)..... 188
Fuses
– dashboard fuse box..... 189
– engine compartment fuse box next to the battery 190-191
– fuse list..... 193
– luggage compartment fuse box..... 192
– replacing fuses..... 187
Glass Holder..... 70
Glove compartment light
– bulb replacement..... 186
Handbrake..... 137
Hazard warning lights 63
Headlight alignment corrector 88
Headlights..... 88
– bulb replacement..... 177
Headlight washers 58
Head restraints..... 31
Heated rear window and door mirrors demisting/defrosting..... 40-44-48
Heating and ventilation 39
Hill Holder (system) 92
Identification data
– bodywork paint plate 226
– chassis marking 226
– engine marking..... 226
– identification data plate 225
Ignition switch 16
Initialisation procedure..... 74
Installing electrical/electronic devices ... 96
Installing the tow hook..... 142
Interior fittings 66
Interiors (cleaning) 222
Internal air recirculation activation..... 41-44
Internal mirror..... 34
Jack 164
Key without remote control 8
Key with remote control 9
Light clusters
– rear light clusters (changing a bulb)..... 181
Lights off..... 52
Load limiters 113
Luggage compartment..... 80
– Extending 81
– Opening..... 80
– Securing your load 84
Luggage compartment roof light
– bulb replacement..... 186
Main beam headlights 52
– bulb replacement..... 179
Maintenance and care
– Scheduled servicing..... 202
– scheduled servicing plan 203
Manual climate control system 42
Menu items..... 20
MSR system..... 93
MSR (system)..... 93
Number plate lights
– bulb replacement..... 183
Parking..... 137
Parking lights..... 52
Parking sensors 103
Passenger compartment heating 40-43
Passenger front airbag 127
Performance (top speed)..... 240

Pollen filter 212
Power socket 69
Pretensioners 113
Protecting the environment 109
Rain sensor 56
Raising the car 199
Rapid front window demisting/defrosting (MAX-DEF function) 48
Rear armrest 67
Rear diffuser 38
Rear door emergency locking device 76
Rear fog light 63-182
Rear roof light 62
– bulb replacement 185
Rear view mirrors 34
Rear window washer nozzles 218
Rear window washer/wiper 57
Rear window wiper
– blade replacement 217
– blades 216
Refuelling the car 107
Replacing fuses 187
Replacing the battery in the key with remote control 11
Replacing the remote control cover 11
Rev counter 5
Reverse light 182
Rims and tyres 233
Rims
– wheels and tyres 214
Roof lights 61
Roof rack/ski rack 87
Safe lock (device) 12
Safety
– carrying children safely 116
Saving fuel 139
SBR system 112
Scheduled Servicing Plan 203
Seat belts 110
– load limiters 113
– maintenance 116
– pretensioners 113
Seats 30
– Backrest angle adjustment 30
– Height adjustment 30
– Longitudinal adjustment 30
– Lumbar adjustment 30
Servicing and care
– heavy-duty use of the car ... 205
– periodic checks 205
Set temperature alignment (MONO function) 50
Setup menu (display) 19
Side airbags (side bag - window bag) 131
Side bags 131
Side lights 52
– bulb replacement 178
Snow chains 144
Snow tyres 143
Spark plugs (type) 228
Speedometer 5
Starting the engine 135-161
Steering lock 16
Steering system 232
Steering wheel 33
Storage compartments 68-70
Storing the car 145
Sun roof 72
Sun visors 71
Suspension 231
Switching off the climate control system 51
Switching on the climate control system 47

Technical data 225
The keys..... 8
Third brake light..... 182
Towing the car..... 199
Towing trailers..... 141
TPMS 100
Transmission 230
TRIP button 29
Trip computer
– TRIP button..... 29
– Trip Computer..... 28
– Trip Computer values..... 28
Tyres
– correct tyre reading..... 233
– Fix&Go Automatic (kit)..... 169
– inflation pressures..... 238
– snow tyres 234
– tyres provided..... 234
Tyres - maintenance..... 214

Using the gearbox 138

Volume sensing/Anti-lift protection 15

Warning lights on panel..... 146
Washer fluid for windscreen/rear window/headlights..... 211
Weights and loads..... 241
Wheel geometry..... 233
Wheel rims
– correct reading of the wheel rim..... 234
– dimensions..... 234
Wheels and tyres
– changing a wheel 162
– Fix&Go Automatic (kit)..... 169
– Wheels and tyres..... 214
Window cleaning..... 55
Windows (cleaning) 221
Windscreen washer nozzles ... 218
Windscreen washer/wiper 55
Windscreen wiper
– blades 216
– blades replacement..... 217
Wiring for radio system..... 95

Fiat Group Automobiles S.p.A. - Parts&Services - Technical Services - Service Engineering
Largo Senatore G. Agnelli, 3 - 10040 Volvera - Torino (Italia)
Print no. 603.99.433 - 10/2013 - 1 Edition

ENGLISH

The data contained in this publication is intended merely as a guide. FIAT reserves the right to modify the models and versions described in this booklet at any time for technical and commercial reasons.
If you have any further questions please consult your FIAT dealer.
Printed in recycled paper without chlorine.