SECTION EM
ENGINE MECHANICAL

CONTENTS

QG

PRECAUTIONS 5
Precautions for Drain Coolant 5
Precautions for Disconnecting Fuel Piping 5
Precautions for Removal and Disassembly 5
Precautions for Inspection, Repair and Replacement 5
Precautions for Assembly and Installation 5
Parts Requiring Angular Tightening 5
Precautions for Liquid Gasket 6
REMOVAL OF LIQUID GASKET SEALING 6
LIQUID GASKET APPLICATION PROCEDURE.... 6
PREPARATION 7
Special Service Tools 7
Commercial Service Tools 9
NOISE, VIBRATION AND HARSHNESS (NVH) TROUBLESHOOTING 11
NVH Troubleshooting —Engine Noise 11
Use the Chart Below to Help You Find the Cause of the Symptom. 12
DRIVE BELTS 13
Checking Drive Belts 13
Tension Adjustment 14
POWER STEERING PUMP AND WATER PUMP BELT 14
ALTERNATOR AND AIR CONDITIONER COMPRESSOR BELT 14
Removal and Installation 15
REMOVAL 15
INSTALLATION 15
AIR CLEANER AND AIR DUCT 16
Removal and Installation 16
REMOVAL 16
INSTALLATION 16
Changing Air Cleaner Element 17
INTAKE MANIFOLD 18
Removal and Installation 18
REMOVAL 18
INSPECTION AFTER REMOVAL 20
INSTALLATION 20
EXHAUST MANIFOLD AND CATALYTIC CONVERTER 21
Removal and Installation 21
REMOVAL 22
INSPECTION AFTER REMOVAL 23
INSTALLATION 23
Disassembly and Assembly 24
M/T MODELS 24
A/T MODELS 24
DISASSEMBLY 24
ASSEMBLY 24
OIL PAN AND OIL STRAINER 25
Removal and Installation 25
REMOVAL 25
INSTALLATION 26
INSPECTION AFTER INSTALLATION 26
IGNITION COIL 27
Removal and Installation 27
REMOVAL 27
INSTALLATION 27
SPARK PLUG (CONVENTIONAL) 28
Removal and Installation 28
REMOVAL 28
INSPECTION AFTER REMOVAL 28
INSTALLATION 28
FUEL INJECTOR AND FUEL TUBE 29
Removal and Installation 29
REMOVAL 29
INSTALLATION 30
INSPECTION AFTER INSTALLATION 31
ROCKER COVER 32
Removal and Installation 32
REMOVAL 32
INSTALLATION 33
CAMSHAFT 35
Removal and Installation 35
REMOVAL 35
INSTALLATION 38

INSPECTION AFTER REMOVAL 42
Valve Clearance 45
INSPECTION 45
ADJUSTMENT (SHIMLESS TYPE) 46
ADJUSTMENT (SHIM TYPE) 47
TIMING CHAIN 50
Removal and Installation 50
REMOVAL 50
INSPECTION AFTER REMOVAL 54
INSTALLATION 54
INSPECTION AFTER INSTALLATION 56
OIL SEAL 57
Removal and Installation of Valve Oil Seal 57
REMOVAL 57
INSTALLATION 57
Removal and Installation of Front Oil Seal 58
REMOVAL 58
INSTALLATION 58
Removal and Installation of Rear Oil Seal 58
REMOVAL 58
INSTALLATION 58
CYLINDER HEAD 60
On-Vehicle Service 60
CHECKING COMPRESSION PRESSURE 60
Removal and Installation 61
REMOVAL 61
INSTALLATION 62
Disassembly and Assembly 63
DISASSEMBLY 63
ASSEMBLY 64
Inspection After Disassembly 65
CYLINDER HEAD DISTORTION 65
VALVE DIMENSIONS 65
VALVE GUIDE CLEARANCE 66
VALVE GUIDE REPLACEMENT 66
VALVE SEAT CONTACT 67
VALVE SEAT REPLACEMENT 68
VALVE SPRING SQUARENESS 69
VALVE SPRING DIMENSIONS AND VALVE SPRING PRESSURE LOAD 69
ENGINE ASSEMBLY 70
Removal and Installation 70
REMOVAL 71
INSTALLATION 72
INSPECTION AFTER INSTALLATION 72
CYLINDER BLOCK 74
Disassembly and Assembly 74
DISASSEMBLY 75
ASSEMBLY 79
How to Select Piston and Bearing 84
DESCRIPTION 84
HOW TO SELECT PISTON 84
HOW TO SELECT CONNECTING ROD BEARING 85
HOW TO SELECT MAIN BEARING 86
Inspection After Disassembly 87
CRANKSHAFT SIDE CLEARANCE 87
CONNECTING ROD SIDE CLEARANCE 88
PISTON AND PISTON PIN CLEARANCE 88
PISTON RING SIDE CLEARANCE 89
PISTON RING END GAP 89
CONNECTING ROD BEND AND TORSION 90
CONNECTING ROD BEARING (BIG END) 90
CONNECTING ROD BUSHING OIL CLEARANCE (SMALL END) 90
CYLINDER BLOCK DISTORTION 91
INNER DIAMETER OF MAIN BEARING HOUSING 92
PISTON TO CYLINDER BORE CLEARANCE 92
OUTER DIAMETER OF CRANKSHAFT JOURNAL 93
OUTER DIAMETER OF CRANKSHAFT PIN 93
OUT-OF-ROUND AND TAPER OF CRANKSHAFT 93
CRANKSHAFT RUNOUT 94
OIL CLEARANCE OF CONNECTING ROD BEARING 94
OIL CLEARANCE OF MAIN BEARING 94
CRUSH HEIGHT OF MAIN BEARING 95
FLYWHEEL RUNOUT 95
SERVICE DATA AND SPECIFICATIONS (SDS) 96
Standard and Limit 96
GENERAL SPECIFICATIONS 96
INTAKE MANIFOLD AND EXHAUST MANIFOLD 96
DRIVE BELTS 96
SPARK PLUG 97
CYLINDER HEAD 97
VALVE 97
CAMSHAFT AND CAMSHAFT BEARING 103
CYLINDER BLOCK 104
PISTON, PISTON RING AND PISTON PIN 104
CONNECTING ROD 105
CRANKSHAFT 105
MAIN BEARING 106
CONNECTING ROD BEARING 106
MISCELLANEOUS COMPONENTS 107
Tightening Torque 107

YD

PRECAUTIONS 109
Precautions for Drain Coolant 109
Precautions for Disconnecting Fuel Piping 109
Precautions for Removal and Disassembly 109
Precautions for Inspection, Repair and Replacement 109
Precautions for Assembly and Installation 109
Parts Requiring Angular Tightening 109
Precautions for Liquid Gasket 110
REMOVAL OF LIQUID GASKET SEALING 110
LIQUID GASKET APPLICATION PROCEDURE 110

PREPARATION **111**
Special Service Tools 111
Commercial Service Tools 114
NOISE, VIBRATION AND HARSHNESS (NVH) TROUBLESHOOTING **115**
NVH Troubleshooting —Engine Noise 115
Use the Chart Below to Help You Find the Cause of the Symptom. 116
DRIVE BELTS **117**
Checking Drive Belts 117
Tension Adjustment 117
AIR CONDITIONER COMPRESSOR BELT 118
ALTERNATOR AND WATER PUMP BELT 118
Removal and Installation 118
REMOVAL 118
INSTALLATION 118
AIR CLEANER AND AIR DUCT **119**
Removal and Installation 119
REMOVAL 119
INSTALLATION 119
CHANGING AIR CLEANER ELEMENT 119
CHARGE AIR COOLER **121**
Removal and Installation 121
REMOVAL 121
INSPECTION AFTER REMOVAL 122
INSTALLATION 122
INTAKE MANIFOLD **123**
Removal and Installation 123
REMOVAL 123
INSPECTION AFTER REMOVAL 124
INSTALLATION 124
INSPECTION AFTER INSTALLATION 125
CATALYST **126**
Removal and Installation 126
REMOVAL 127
INSTALLATION 127
EXHAUST MANIFOLD AND TURBOCHARGER . **128**
Removal and Installation 128
REMOVAL 129
INSTALLATION 130
INSPECTION AFTER INSTALLATION 130
Disassembly and Assembly 131
REMOVAL 132
INSPECTION AFTER REMOVAL 132
Turbocharger 133
ROTOR SHAFT CLEARANCE 134
ROTOR SHAFT END PLAY 134
TURBINE WHEEL 134
COMPRESSOR WHEEL 134
TURBOCHARGER BOOST CONTROL ACTUATOR 135
TROUBLE DIAGNOSIS OF TURBOCHARGER 136
OIL PAN AND OIL STRAINER **137**
Removal and Installation 137
REMOVAL 137
INSPECTION AFTER REMOVAL 139
INSTALLATION 139
INSPECTION AFTER INSTALLATION 141
GLOW PLUG **142**
Removal and Installation 142
REMOVAL 142
INSTALLATION 142
VACUUM PUMP **143**
Removal and Installation 143
INSPECTION BEFORE REMOVAL 143
REMOVAL 143
INSTALLATION 144
INSPECTION AFTER INSTALLATION 144
Disassembly and Assembly 145
DISASSEMBLY 145
ASSEMBLY 145
INJECTION TUBE AND FUEL INJECTOR **147**
Removal and Installation 147
REMOVAL 147
INSTALLATION 148
INSPECTION AFTER INSTALLATION 149
FUEL PUMP **150**
Removal and Installation 150
REMOVAL 150
INSPECTION AFTER REMOVAL 155
INSTALLATION 155
ROCKER COVER **160**
Removal and Installation 160
REMOVAL 160
INSTALLATION 161
INSPECTION AFTER INSTALLATION 161
CAMSHAFT **162**
Removal and Installation 162
REMOVAL 162
INSPECTION AFTER REMOVAL 163
INSTALLATION 166
Valve Clearance 167
INSPECTION 167
ADJUSTMENTS 168
SECONDARY TIMING CHAIN **171**
Removal and Installation 171
REMOVAL 171
INSPECTION AFTER REMOVAL 173
INSTALLATION 174
PRIMARY TIMING CHAIN **176**
Removal and Installation 176
REMOVAL 178
INSPECTION AFTER REMOVAL 180
INSTALLATION 181
CYLINDER HEAD **186**
On-Vehicle Service 186
CHECKING COMPRESSION PRESSURE 186
Removal and Installation 187
REMOVAL 187
INSPECTION AFTER REMOVAL 188
INSTALLATION 188
Disassembly and Assembly 191
DISASSEMBLY 191
ASSEMBLY 192
INSPECTION AFTER DISASSEMBLY 192

ENGINE ASSEMBLY 197
Removal and Installation 197
REMOVAL 198
INSTALLATION 200
INSPECTION AFTER INSTALLATION 200
CYLINDER BLOCK 201
Disassembly and Assembly 201
DISASSEMBLY 202
ASSEMBLY 206
How to Select Piston and Bearing 210
DESCRIPTION 210
HOW TO SELECT PISTON 210
HOW TO SELECT CONNECTING ROD BEARING 211
HOW TO SELECT MAIN BEARING 212
Inspection After Disassembly 213
CRANKSHAFT SIDE CLEARANCE 213
CONNECTING ROD SIDE CLEARANCE 214
PISTON TO PISTON PIN CLEARANCE 214
PISTON RING SIDE CLEARANCE 214
PISTON RING END GAP 215
CONNECTING ROD BEND AND TORSION 215
CONNECTING ROD BIG END INNER DIAMETER 216
CONNECTING ROD BUSHING OIL CLEARANCE (SMALL END) 216
CYLINDER BLOCK TOP SURFACE DISTORTION 217
MAIN BEARING HOUSING INNER DIAMETER 217
PISTON TO CYLINDER BORE CLEARANCE 217
CRANKSHAFT JOURNAL OUTER DIAMETER 218
CRANKSHAFT PIN OUTER DIAMETER 218
CRANKSHAFT OUT-OF-ROUND AND TAPER 219
CRANKSHAFT RUNOUT 219
CONNECTING ROD BEARING OIL CLEARANCE 219
MAIN BEARING OIL CLEARANCE 220
MAIN BEARING CRUSH HEIGHT 220
MAIN BEARING CAP BOLT DEFORMATION 220
CONNECTING ROD BOLT DEFORMATION 221
OIL JET 221
OIL JET RELIEF VALVE 221
MOVEMENT AMOUNT OF FLYWHEEL 221
SERVICE DATA AND SPECIFICATIONS (SDS) 223
Standard and Limit 223
GENERAL SPECIFICATIONS 223
INTAKE MANIFOLD AND EXHAUST MANIFOLD 223
DRIVE BELTS 223
CYLINDER HEAD 224
VALVE 224
CAMSHAFT AND CAMSHAFT BEARING 228
CYLINDER BLOCK 228
PISTON, PISTON RING AND PISTON PIN 229
CONNECTNG ROD 230
CRANKSHAFT 230
AVAILABLE MAIN BEARING 231
AVAILABLE CONNECTING ROD BEARING 231
MISCELLANEOUS COMPONENTS 231
Tightening Torque 232

PRECAUTIONS

PFP:00001

Precautions for Drain Coolant

EBS00QDT

- Drain coolant when engine is cooled.

Precautions for Disconnecting Fuel Piping

EBS00QDU

- Before starting work, make sure no fire or spark producing items are in the work area.
- Release fuel pressure before disassembly.
- After disconnecting pipes, plug openings to stop fuel leakage.

Precautions for Removal and Disassembly

EBS00QDV

- When instructed to use special service tools, use the specified tools. Always be careful to work safely, avoid forceful or uninstructed operations.
- Exercise maximum care to avoid damage to mating or sliding surfaces.
- Cover openings of engine system with tape or the equivalent, if necessary, to seal out foreign materials.
- Mark and arrange disassembly parts in an organized way for easy troubleshooting and re-assembly.
- When loosening nuts and bolts, as a basic rule, start with the one furthest outside, then the one diagonally opposite, and so on. If the order of loosening is specified, do exactly as specified.

Precautions for Inspection, Repair and Replacement

EBS00QDW

- Before repairing or replacing, thoroughly inspect parts. Inspect new replacement parts in the same way, and replace if necessary.

Precautions for Assembly and Installation

EBS00QDX

- Use torque wrench to tighten bolts or nuts.
- When tightening nuts and bolts, as a basic rule, equally tighten in several different steps starting with the ones in center, then ones on inside and outside diagonally in this order. If the order of tightening is specified, do exactly as specified.
- Replace with new gasket, packing, oil seal or O-ring.
- Thoroughly wash, clean, and air-blow each part. Carefully check oil or coolant passages for any restriction and blockage.
- Avoid damaging sliding or mating surfaces. Completely remove foreign materials such as cloth lint or dust. Before assembly, oil sliding surfaces well.
- Release air within route after draining coolant.
- After repairing, start engine and increase engine speed to check coolant, fuel, oil, and exhaust systems for leakage.

Parts Requiring Angular Tightening

EBS00QDY

- Use an angle wrench for the final tightening of the following engine parts.
  - Cylinder head bolts
  - Lower cylinder block bolts
  - Connecting rod cap bolts
  - Crankshaft pulley bolt (No angle wrench is required as the bolt flange is provided with notches for angular tightening)
- Do not use a torque value for final tightening.
- The torque value for these parts are for a preliminary step.
- Ensure thread and seat surfaces are clean and coated with engine oil.

Precautions for Liquid Gasket

EBS00QDZ

REMOVAL OF LIQUID GASKET SEALING

- After removing the mounting bolts and nuts, separate the mating surface using a seal cutter and remove the liquid gasket.

CAUTION:

Be careful not to damage the mating surfaces.

- In areas where the cutter is difficult to use, use a plastic hammer to lightly tap the areas where the liquid gasket is applied.

CAUTION:

If for some unavoidable reason a tool such as a flat-bladed screwdriver is used, be careful not to damage the mating surfaces.

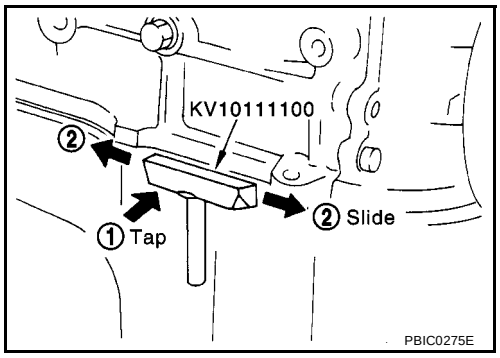

LIQUID GASKET APPLICATION PROCEDURE

1. Using a scraper, remove the old liquid gasket adhering to the gasket application surface and the mating surface.

- Remove the liquid gasket completely from the groove of the gasket application surface, mounting bolts, and bolt holes.

2. Wipe the gasket application surface and the mating surface with white gasoline (lighting and heating use) to remove adhering moisture, grease and foreign materials.
3. Attach the liquid gasket to the tube presser.
   Use Genuine Liquid Gasket or equivalent.

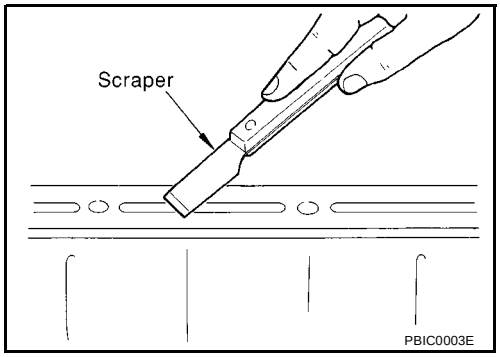

4. Apply the gasket without breaks to the specified location with the specified dimensions.

- If there is a groove for the liquid gasket application, apply the gasket to the groove.
- As for the bolt holes, normally apply the gasket inside the holes. If specified, it should be applied outside the holes. Make sure to read the text of service manual.
- Within five minutes of gasket application, install the mating component.
- If the liquid gasket protrudes, wipe it off immediately.
- Do not retighten after the installation.
- After 30 minutes or more have passed from the installation, fill the engine oil and coolant.

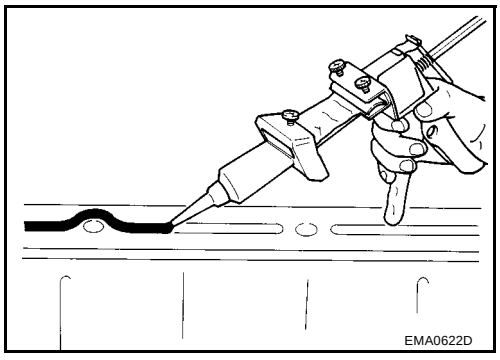

CAUTION:

If there are specific instructions in the service manual, observe them.

PREPARATION

PFP:00002

Special Service Tools

EBS00QE0

Tool number Tool name		Description
ST0501S000 Engine stand assembly 1. ST05011000 Engine stand 2. ST05012000 Base	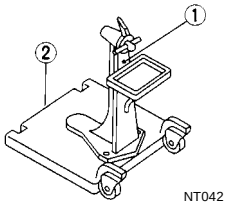	Disassembling and assembling
Engine attachment assembly 1. KV10106500 Engine attachment 2. KV10113300 Sub-attachment	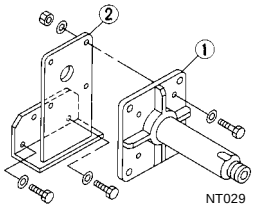	Overhauling engine
KV10114400 Heated oxygen sensor wrench	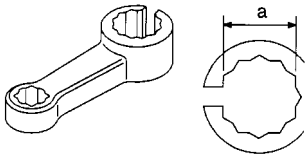	Loosening or tightening heated oxygen sensor **a: 22 mm (0.87 in)**
ST10120000 Cylinder head bolt wrench	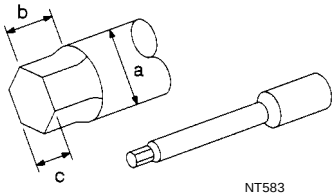	Loosening and tightening cylinder head bolt **a: 13 mm (0.51 in) dia.** **b: 12 mm (0.47 in)** **c: 10 mm (0.39 in)**
KV10116200 Valve spring compressor 1. KV10115900 Attachment	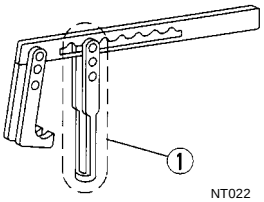	Disassembling valve mechanism
KV10115600 Valve oil seal drift	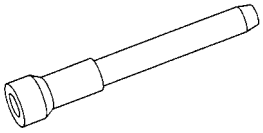	Installing valve oil seal
KV10107902 Valve oil seal puller	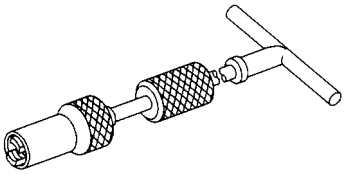	Removing valve oil seal

Tool number Tool name		Description
KV101151S0 Lifter stopper set 1. KV10115110 Camshaft pliers 2. KV10115120 Lifter stopper	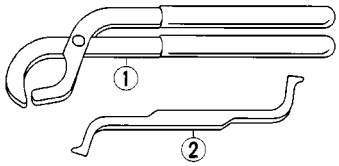 NT041	Changing shims
EM03470000 Piston ring compressor	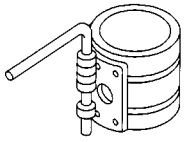 NT044	Installing piston assembly into cylinder bore
1. ST15243000 Valve seat drift 2. KV11103710 Adapter 3. KV11103720 Adapter	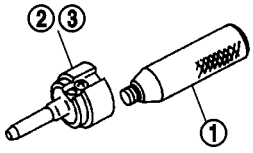 PBIC1120E	Installing valve seat drift
KV10111100 Seal cutter	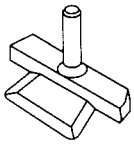 NT046	Removing oil pan
WS39930000 Tube presser	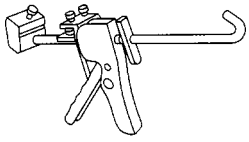 NT052	Pressing the tube of liquid gasket
KV10112100 Angle wrench	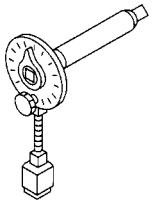 NT014	Tightening bolts for bearing cap, cylinder head, etc. in angle

Tool number Tool name		Description
ST16610001 Pilot bushing puller	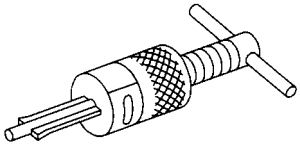 NT045	Removing pilot bushing
KV101056S0* Rear gear stopper 1. KV10105620 Adapter 2. KV10105610 Plate assembly	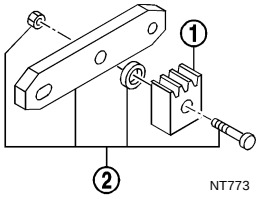 NT773	Preventing crankshaft from rotating

Commercial Service Tools

EBS00QE1

Tool name		Description
Spark plug wrench	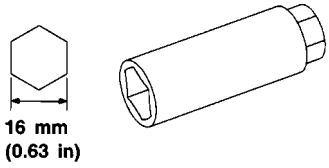 16 mm (0.63 in) NT047	Removing and installing spark plug
Crankshaft pulley puller	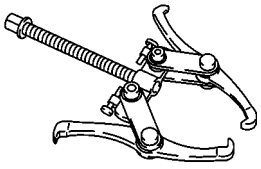 PBIC0887E	Removing crankshaft pulley
Manual lift table caddy	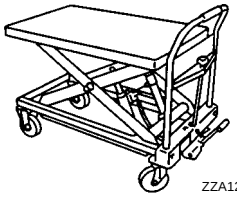 ZZA1210D	Removing and installing engine
Valve seat cutter set	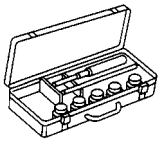 NT048	Finishing valve seat dimensions
Piston ring expander	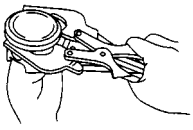 NT030	Removing and installing piston ring

Tool name	Description
Valve guide drift 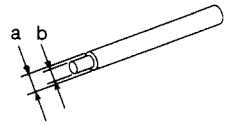 NT015	Removing and installing valve guide **Intake & Exhaust:** **a: 9.5 mm (0.374 in) dia.** **b: 5.5 mm (0.217 in) dia.**
Valve guide reamer 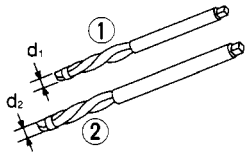 NT016	Reaming valve guide **1** or hole for oversize valve guide **2** **Intake & Exhaust:** **d_1 : 5.5 mm (0.217 in) dia.** **d_2 : 9.685 mm (0.3813 in) dia.**
Front oil seal drift 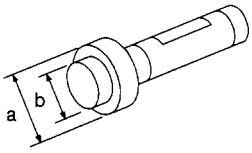 NT049	Installing front oil seal **a: 50 mm (1.97 in) dia.** **b: 44 mm (1.73 in) dia.**
Rear oil seal drift 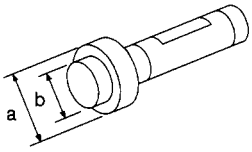 NT049	Installing rear oil seal **a: 102 mm (4.02 in) dia.** **b: 90 mm (3.54 in) dia.**

NOISE, VIBRATION AND HARSHNESS (NVH) TROUBLESHOOTING

PFP:00003

NVH Troubleshooting —Engine Noise

EBS00QE2

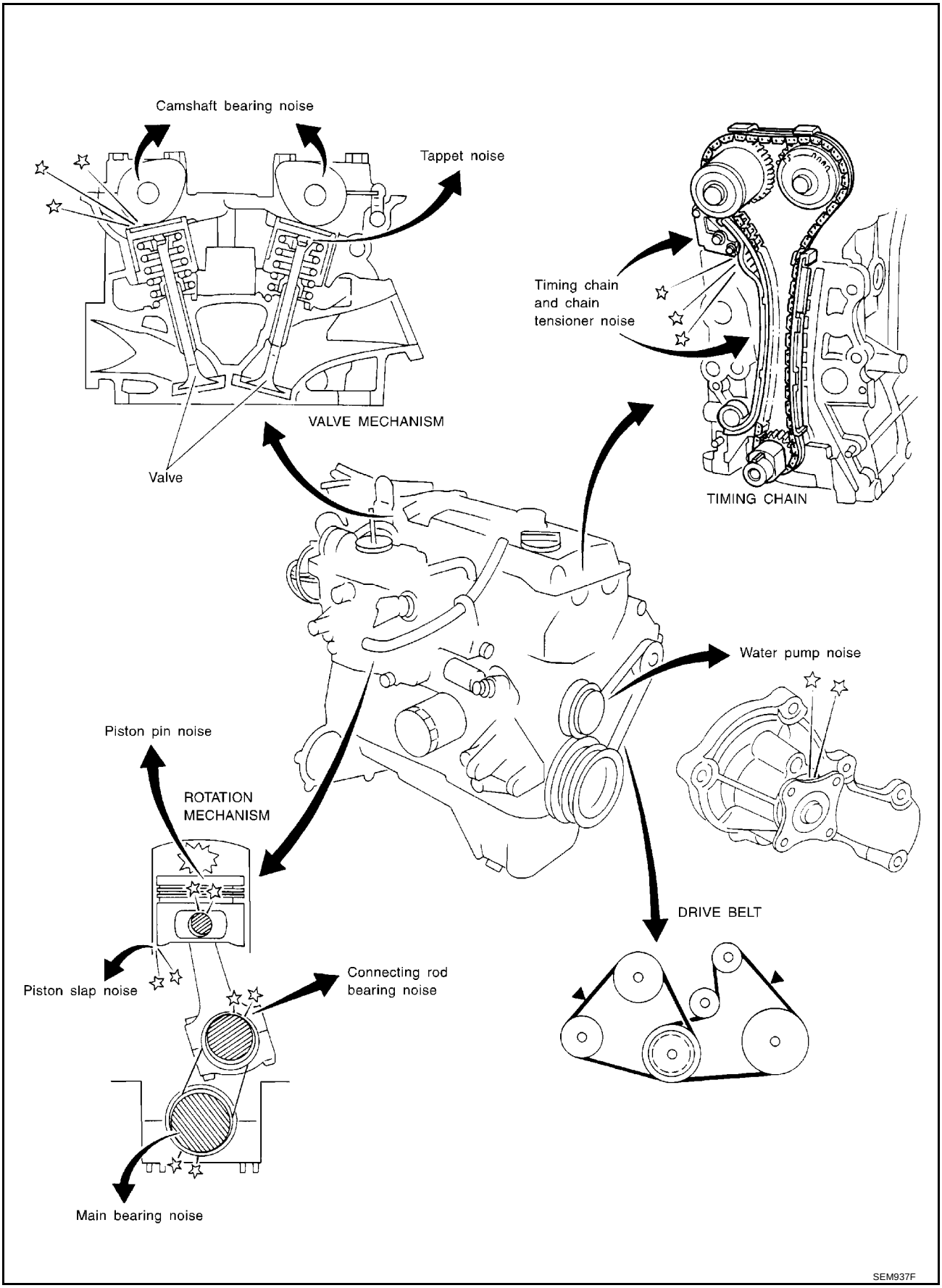

Use the Chart Below to Help You Find the Cause of the Symptom.

EBS00QE3

1. Locate the area where noise occurs.
2. Confirm the type of noise.
3. Specify the operating condition of engine.
4. Check specified noise source.

If necessary, repair or replace these parts.

Location of noise	Type of noise	Operating condition of engine						Source of noise	Check item	Reference page
		Before warm-up	After warm-up	When starting	When idling	When racing	While driving			
Top of engine Rocker cover Cylinder head	Ticking or clicking	C	A	—	A	B	—	Tappet noise	Valve clearance	EM-45
	Rattle	C	A	—	A	B	C	Camshaft bearing noise	Camshaft journal clearance Camshaft runout	EM-42 EM-42
Crankshaft pulley Cylinder block (Side of engine) Oil pan	Slap or knock	—	A	—	B	B	—	Piston pin noise	Piston and piston pin clearance Connecting rod bushing clearance	EM-88 EM-90
	Slap or rap	A	—	—	B	B	A	Piston slap noise	Piston-to-bore clearance Piston ring side clearance Piston ring end gap Connecting rod bend and torsion	EM-92 EM-89
	Knock	A	B	C	B	B	B	Connecting rod bearing noise	Connecting rod bushing clearance (Small end) Connecting rod bearing clearance (Big end)	EM-90 EM-94
	Knock	A	B	—	A	B	C	Main bearing noise	Main bearing oil clearance Crankshaft runout	EM-94 EM-94
Front of engine Timing chain cover	Tapping or ticking	A	A	—	B	B	B	Timing chain and chain tensioner noise	Timing chain cracks and wear Timing chain tensioner operation	EM-54 EM-50
Front of engine	Squeaking or fizzing	A	B	—	B	—	C	Drive belts (Sticking or slipping)	Drive belts deflection	EM-13
	Creaking	A	B	A	B	A	B	Drive belts (Slipping)	Idler pulley bearing operation	
	Squall Creak	A	B	—	B	A	B	Water pump noise	Water pump operation	LC-14

A: Closely related B: Related C: Sometimes related —: Not related

DRIVE BELTS

PFP:02117

Checking Drive Belts

EBS00QE4

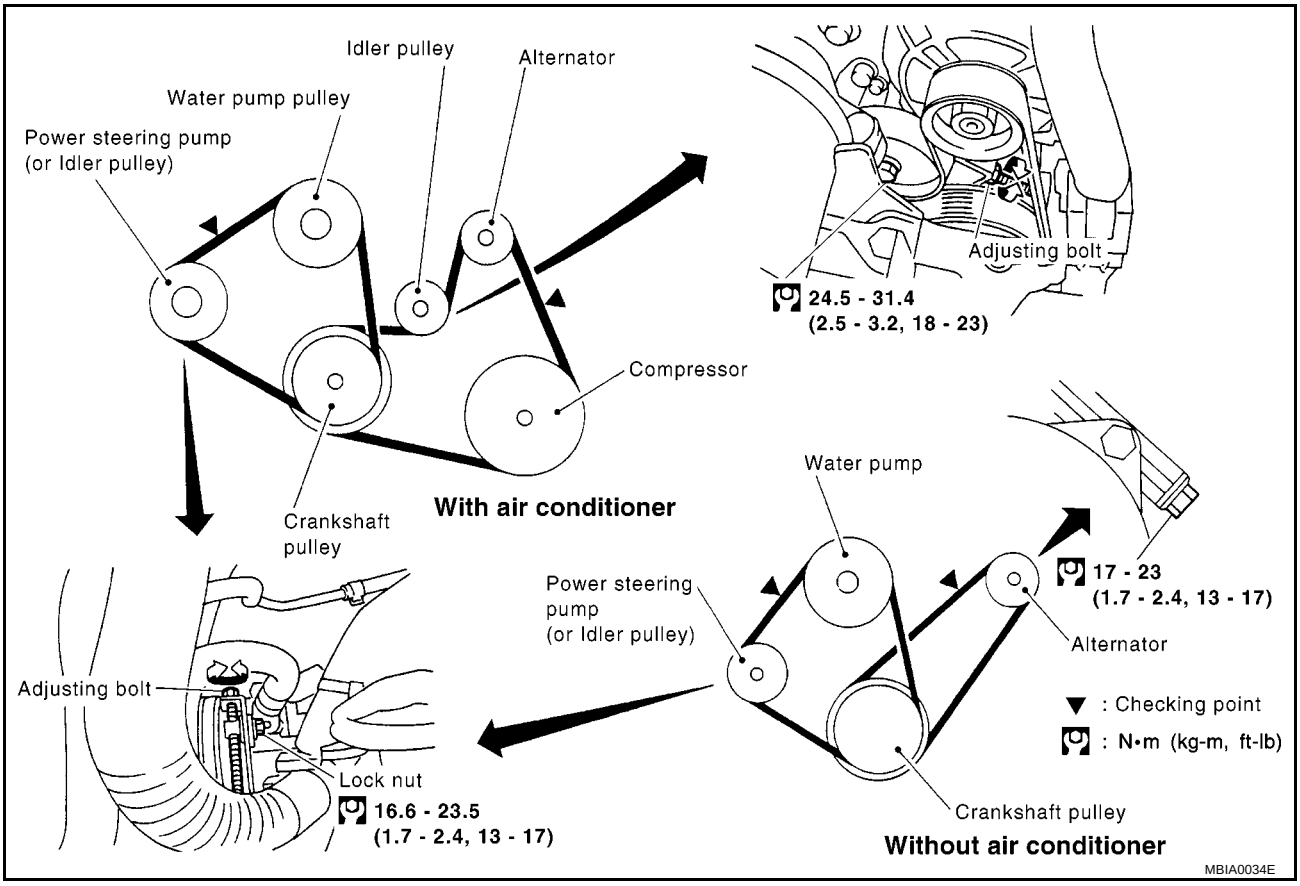

- Before inspecting the engine, make sure the engine has cooled down; wait approximately 30 minutes after the engine has been stopped.
- Visually inspect all belts for wear, damage, or cracks on contacting surfaces and edge areas.
- When measuring deflection, apply 98 N (10 kg, 22 lb) at the ▼ marked point.

CAUTION:

When measuring belt tension immediately after belt is installed, first set the tension to the standard. Then, rotate crankshaft for more than two turns in order to eliminate variance in belt deflection between the pulleys. Re-measure and adjust the tension to the standard.

		Deflection adjustment Unit: mm (in)		
		Used belt		New belt
		Limit	After adjustment	
Alternator	Without air conditioner compressor	10.2 (0.402)	6.5 - 7.0 (0.256 - 0.276)	5.5 - 6.1 (0.217 - 0.240)
	With air conditioner compressor	8.1 (0.319)	5.3 - 5.7 (0.209 - 0.224)	4.5 - 5.0 (0.177 - 0.197)
Power steering oil pump		7.1 (0.280)	4.4 - 4.9 (0.173 - 0.193)	3.9 - 4.4 (0.154 - 0.173)
Applied pushing force		98 N (10 kg, 22 lb)		

Tension Adjustment

EBS00QE5

Portion	Belt tightening method for adjustment
Power steering pump and water pump belt	Adjusting bolt on power steering pump
Alternator and air conditioner compressor belt	Adjusting bolt on idler pulley

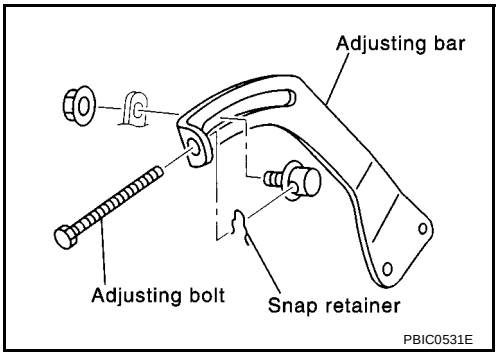

CAUTION:

- **When belt is replaced with a new one, tighten it a little stronger than current one to accommodate for insufficient adaptability with pulley grooves.**
- **When tension of belt being used exceeds "Retightening limit", adjust it to value for "Used belt".**
- **When installing belt, make sure that it is correctly engaged with pulley groove.**
- **Keep oil and water away from belt.**
- **Do not twist or bend belt excessively.**
- When adjusting belt, remove snap retainer from adjusting bolt thread (to prevent the retainer from becoming pinched or missing).
- After adjustment, be sure to install snap retainer to adjusting bolt thread.

NOTE:
Snap retainer can prevent adjusting bolt from dropping due to vibration during driving.

POWER STEERING PUMP AND WATER PUMP BELT

1. Loosen lock nut (A) and power steering pump mounting nut (B).
2. Turn adjusting bolt (C) to adjust. Refer to EM-13, "Checking Drive Belts" .
3. Tighten lock nut (A) and power steering pump mounting nut (B) in this order.

Nut A :

: 16.6 - 23.5 N·m (1.7 - 2.4 kg-m, 13 - 17 ft-lb)

Nut B :

: 31.4 - 42.2 N·m (3.2 - 4.3 kg-m, 24 - 31 ft-lb)

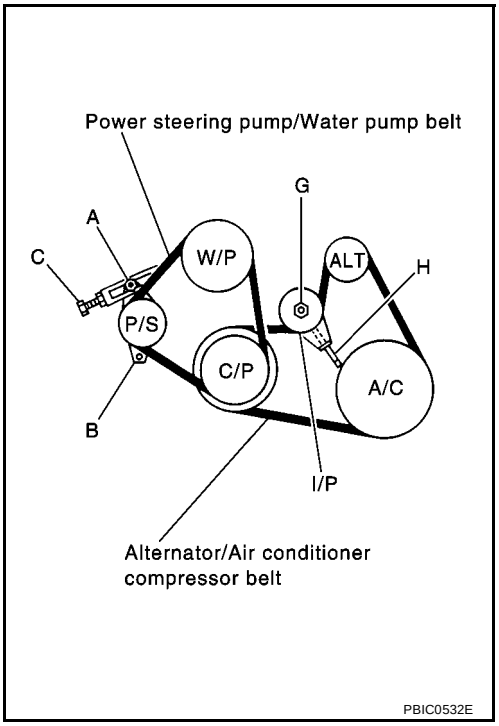

ALTERNATOR AND AIR CONDITIONER COMPRESSOR BELT

1. Remove RH splash cover (with undercover attached).
2. Loosen lock nut (G).
3. Turn adjusting bolt (H) to adjust.
   Refer to EM-13, "Checking Drive Belts" .
4. Tighten lock nut (G).

Nut G :

: 24.5 - 31.4 N·m (2.5 - 3.2 kg-m, 18 - 23 ft-lb)

Removal and Installation

EBS00QE6

REMOVAL

- Loosen each belt while referring to “Tension Adjustment”, and remove them one by one starting from the one in front.

INSTALLATION

1. Install belts to pulley in reverse order of removal.
2. Adjust belt tension.

   CAUTION:
   - **When checking belt tension immediately after installation, first, adjust to specified value. Then, after turning crankshaft more than two turns, re-adjust to specified value to avoid variation in deflection between pulleys.**
   - **Tighten idler pulley lock nut by hand and measure tension without looseness.**
3. Tighten each adjusting bolt and nut to the specified torque.
4. Make sure that tension of each belt is within the standard.

AIR CLEANER AND AIR DUCT

PFP:16500

Removal and Installation

EBS00QE7

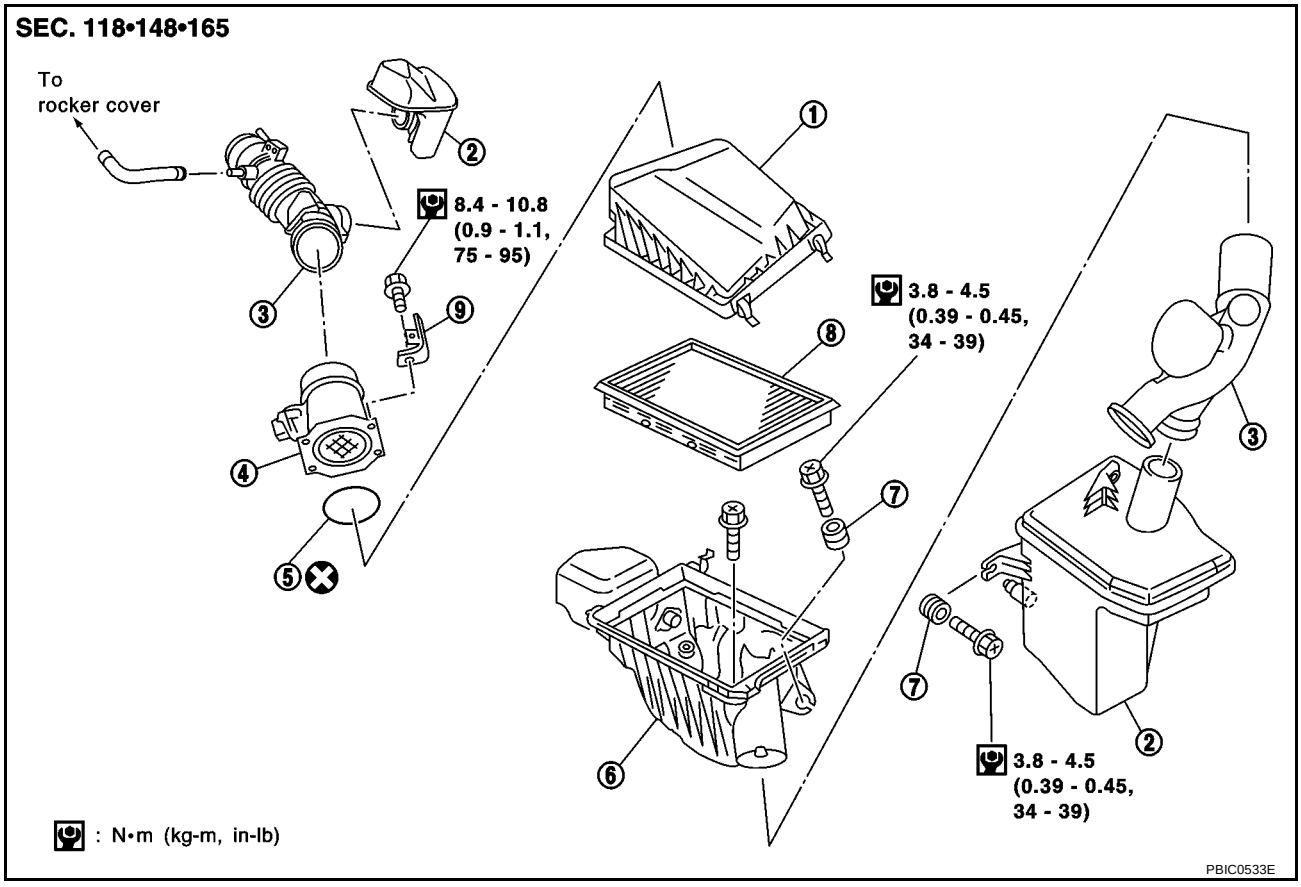

1. Air cleaner case (upper)	2. Resonator	3. Air duct
4. Mass air flow sensor	5. O-ring	6. Air cleaner case (lower)
7. Grommet	8. Air cleaner element	9. Bracket

REMOVAL

1. Remove air cleaner case assembly, air duct and resonator.
   - Add marks as necessary for easier installation.
2. Remove harness connector from mass air flow sensor.
3. Remove mass air flow sensor.

   CAUTION:

   Handle mass air flow sensor with following cares.
   - **Do not shock it.**
   - **Do not disassembly it.**
   - **Do not touch its sensor.**
   - **Do not deform mass air flow sensor's wire mesh.**
4. Remove left fender protector and resonator.

INSTALLATION

1. Attach each joint aligning marks put at removal. Screw clamps firmly.
2. Install in the reverse order of removal.

Changing Air Cleaner Element

EBS00QE8

The viscous paper type filter does not need cleaning between renewals.

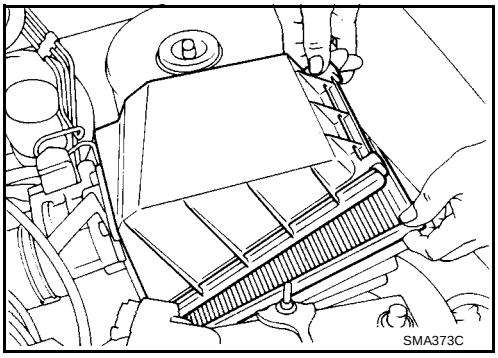

INTAKE MANIFOLD

PFP:14003

Removal and Installation

EBS00QE9

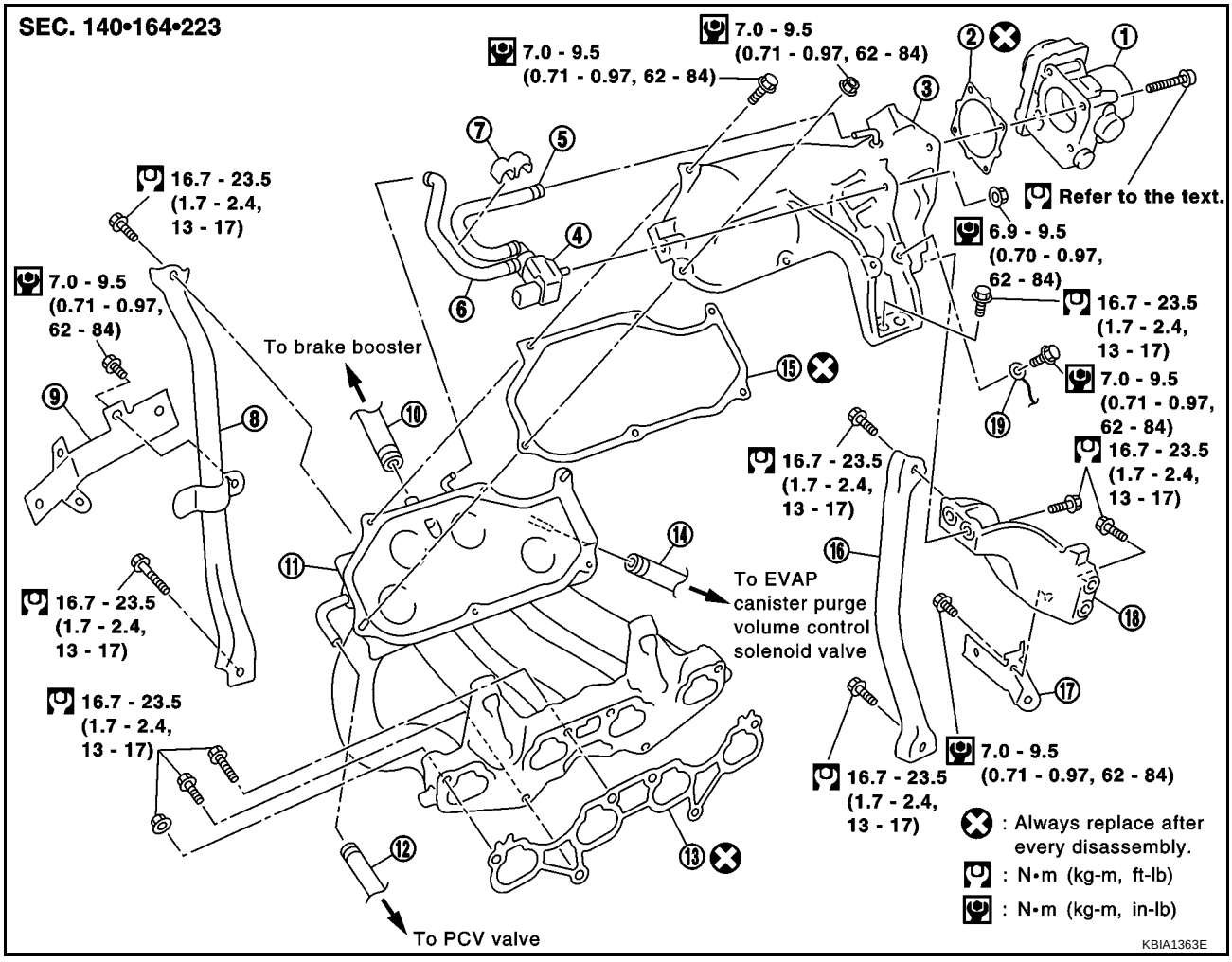

1. Electric throttle control actuator	2. Gasket	3. Intake manifold collector
4. EVAP canister purge volume control solenoid valve	5. Vacuum hose	6. Vacuum hose
7. Hose clamp	8. Intake manifold support (front)	9. Harness bracket
10. Vacuum hose	11. Intake manifold	12. PCV hose
13. Gasket	14. Vacuum hose	15. Gasket
16. Intake manifold support (rear)	17. Harness bracket	18. Intake manifold support (engine rear)
19. Grounding wire		

REMOVAL

WARNING:

To avoid the danger of being scalded, never drain the coolant when the engine is hot.

1. Release fuel pressure.
   Refer to EC-52, "FUEL PRESSURE RELEASE" (WITH EURO-OBD), EC-579, "FUEL PRESSURE RELEASE" (WITHOUT EURO-OBD).
2. Remove air duct and air cleaner case.
   Refer to EM-16, "Removal and Installation" .
3. Disconnect harness on engine top surface, and move it aside.
4. Disconnect fuel injector/fuel tube assembly from intake manifold, and move it aside.
   - It is not necessary to disconnect fuel hose.
5. Disconnect the following vacuum hoses.
6. Disconnect blow-by hose (between intake manifold collector and rocker cover).

7. Loosen mounting bolts in reverse order shown in figure to remove electric throttle control actuator.

   CAUTION:
   - **Do not shock it.**
   - **Do not disassembly and adjusting.**

   NOTE:
   Remove intake manifold collector and electronic throttle control as a single assembly, then remove electronic throttle control itself.

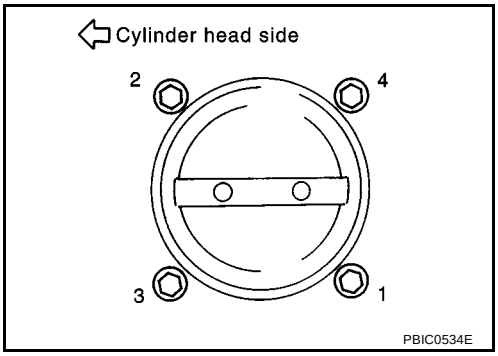

8. Remove bolt on cylinder head side of intake manifold collector.
9. Loosen intake manifold collector nuts and bolts in reverse of the order shown in the figure.
   - Do not remove intake manifold collector at this stage.

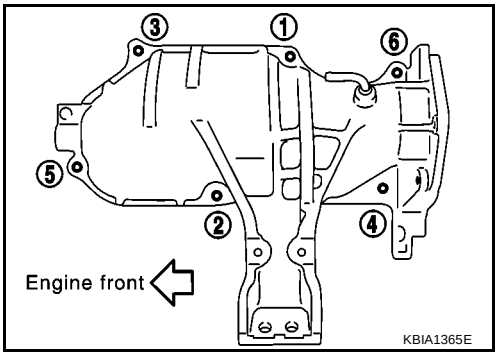

10. Move harness, which is fixed on intake manifold support, with bracket.
11. Remove intake manifold supports (rear, front, engine rear).

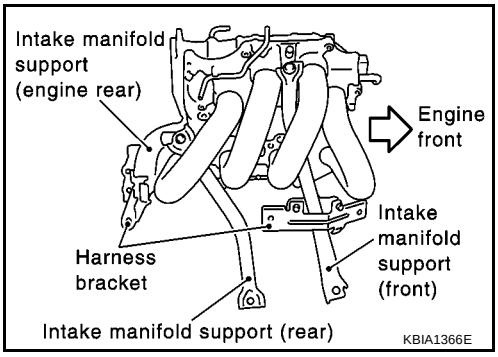

12. Loosen nuts and bolts in reverse order shown in the figure, and remove intake manifold from cylinder head.
13. Disconnect intake manifold collector from intake manifold, and pull out between engine and body.

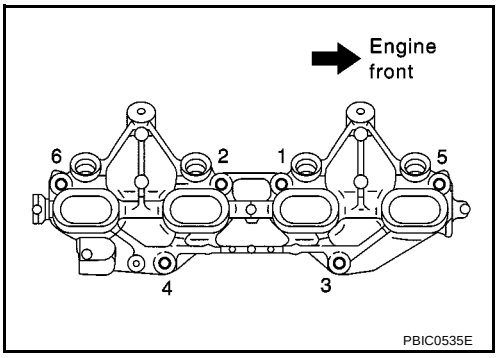

INSPECTION AFTER REMOVAL

Surface Distortion

- Using straightedge and feeler gauge, inspect surface distortion of intake manifold collector and intake manifold surface.

  Limit : 0.1 mm (0.004 in)

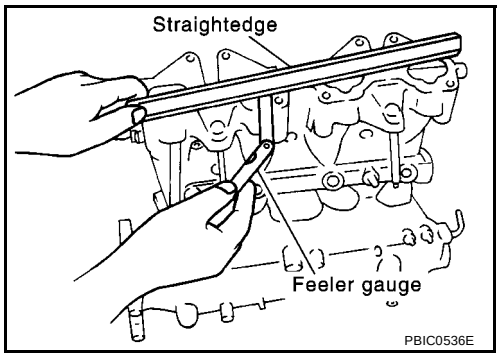

INSTALLATION

- Install in the reverse order of removal paying attention to the following.

Tightening Intake Manifold

- Temporarily attach before installing intake manifold collector.
- Tighten in numerical order as shown in the figure.

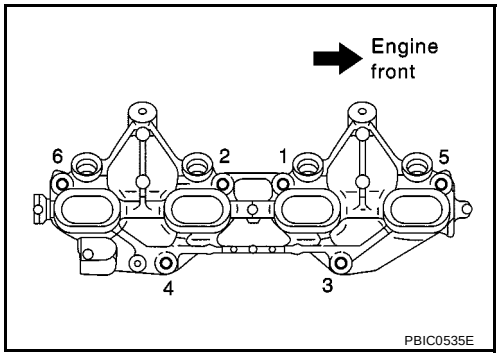

Tightening Intake Manifold Collector

- Temporarily attach before installing intake manifold.
- Tighten in numerical order as shown in the figure.

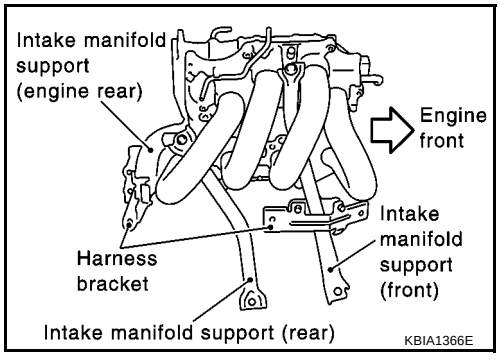

Installation of Electric Throttle Control Actuator

- Tighten mounting bolts for electric throttle control actuator in numerical order shown in figure.

  : 17.7 - 21.6 N·m (1.8 - 2.2 kg-m, 13 - 15 ft-lb)

  CAUTION:
  When electric throttle control actuator is replaced, perform idle air volume learning.

- Refer to BASIC SERVICE PROCEDURE, EC-49, "Idle Air Volume Learning" (WITH EURO-OBD), EC-576, "Idle Air Volume Learning" (WITHOUT EURO-OBD).

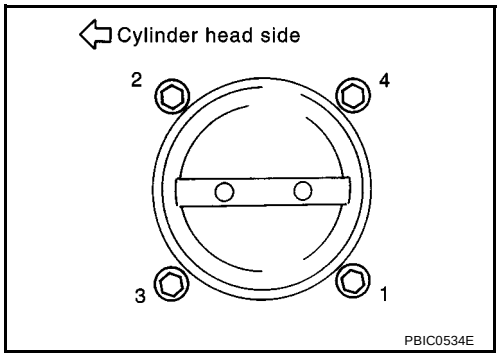

EXHAUST MANIFOLD AND CATALYTIC CONVERTER

PFP:14004

Removal and Installation

EBS00QEA

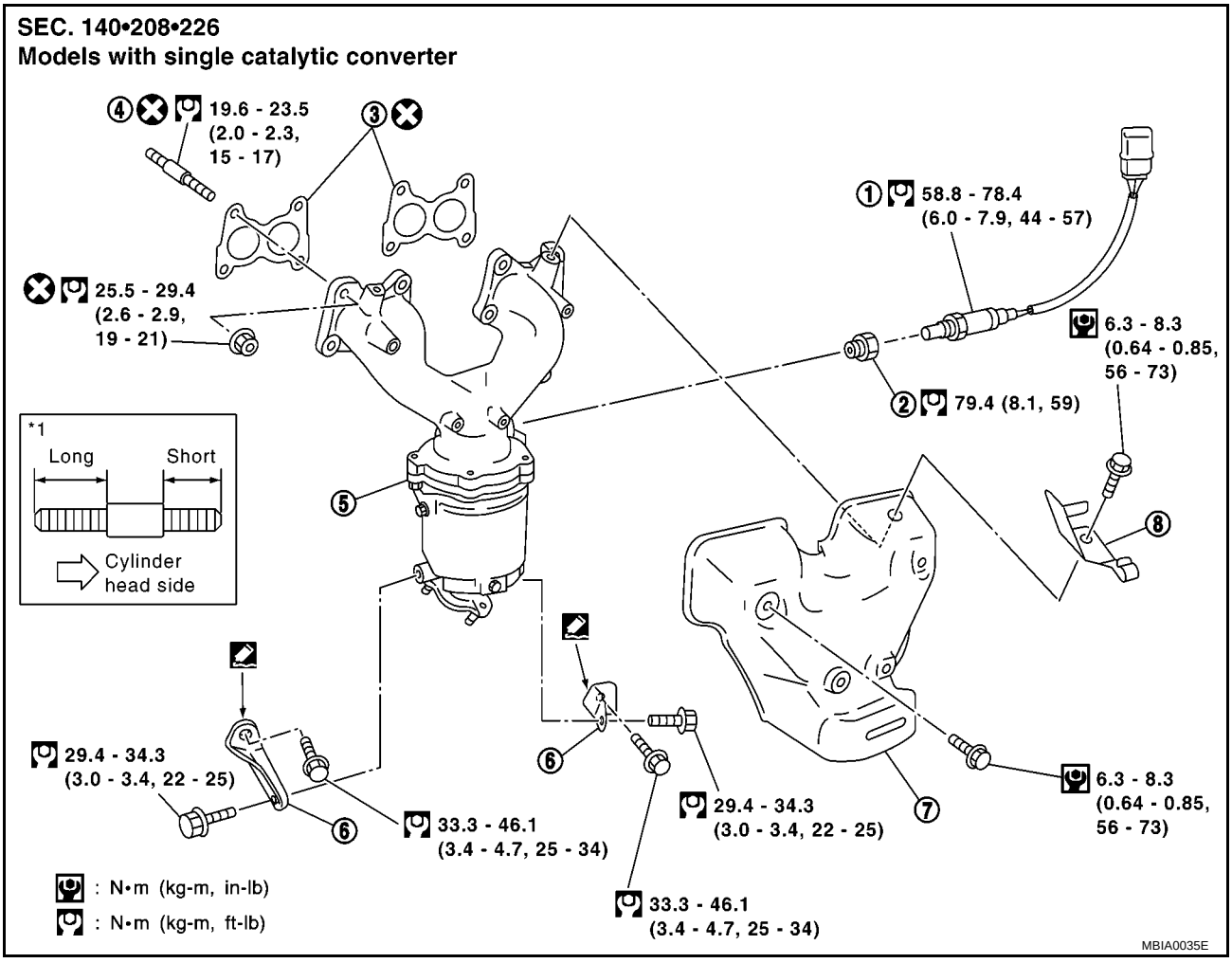

1. Heated oxygen sensor 1	2. Ground nut	3. Gasket
4. Stud bolt	5. Exhaust manifold and catalytic converter assembly	6. Support
7. Exhaust manifold cover	8. Heated oxygen sensor harness bracket	

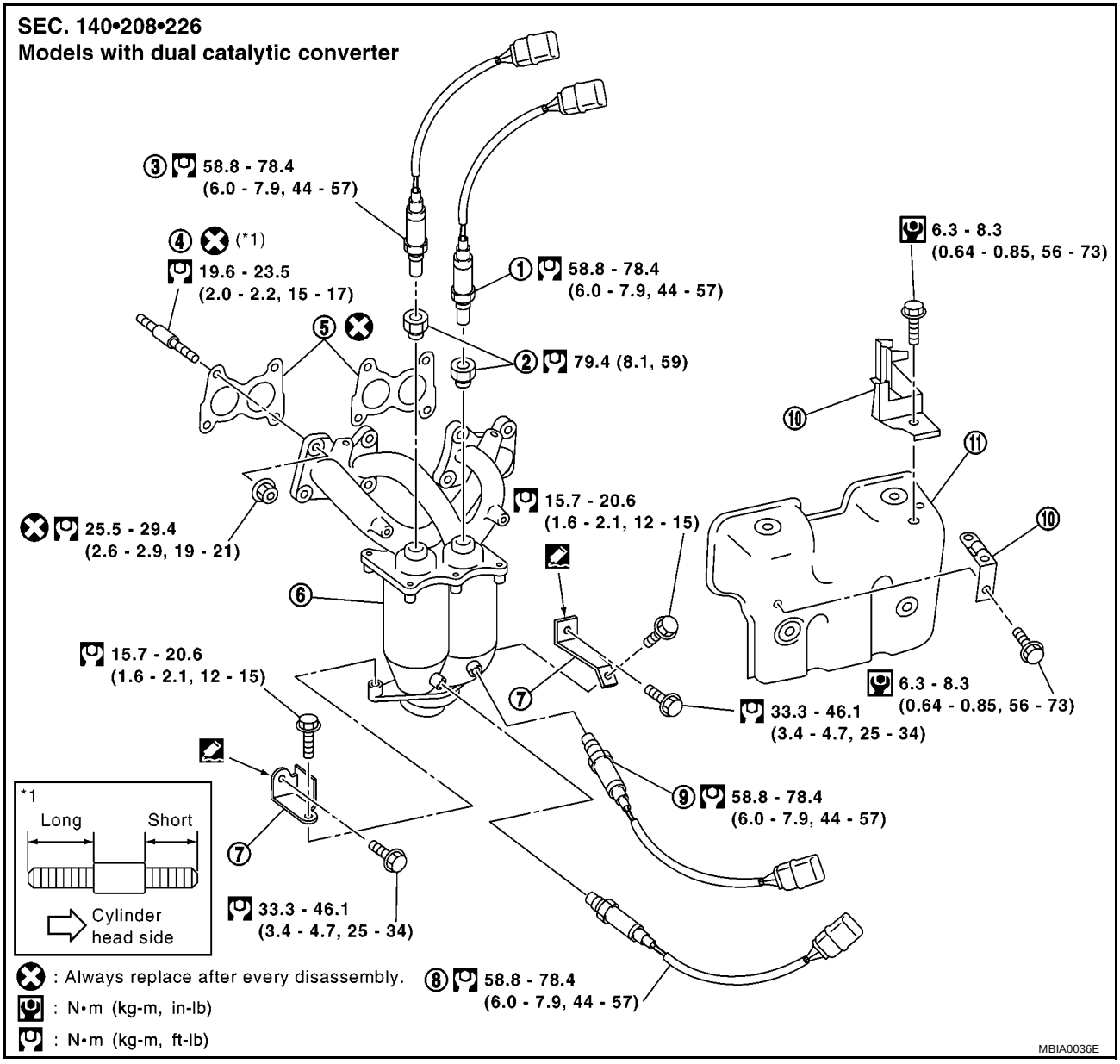

1.	Heated oxygen sensor 1 (bank 2)	2.	Ground nut	3.	Heated oxygen sensor 1 (bank 1)
4.	Stud bolt	5.	Gasket	6.	Exhaust manifold and catalytic converter assembly
7.	Support	8.	Heated oxygen sensor 2 (bank 1)	9.	Heated oxygen sensor 2 (bank 2)
10.	Heated oxygen sensor harness bracket	11.	Exhaust manifold cover		

REMOVAL

1. Remove undercover.
2. Disconnect exhaust front tube from catalytic converter. Refer to FE-11, “Exhaust System”.
3. Remove exhaust manifold support from both sides of catalytic converter.
4. Disconnect heated oxygen sensor harness connector.
5. Remove heated oxygen sensors.
   - Follow below steps to remove each heated oxygen sensor.

- Using heated oxygen sensor wrench, remove heated oxygen sensor.

CAUTION:

- **Be careful not to damage heated oxygen sensor.**
- **When using heated oxygen sensor wrench, tighten to the middle of specified torque because length of tool may induce sight indication increase. (Do not tighten to the maximum specified torque)**
- **Do not over torque the heated oxygen sensor. Doing so may cause damage to the heated oxygen sensor, resulting in the MI coming on.**

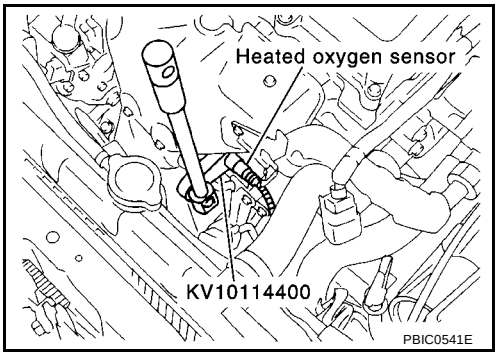

6. Remove exhaust manifold cover.
7. Loosen mounting nuts in reverse order shown in figure to remove exhaust manifold and catalytic converter assembly.

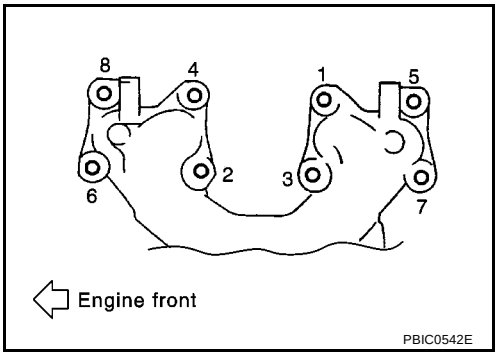

INSPECTION AFTER REMOVAL

Surface Distortion

- Use a reliable straightedge and feeler gauge to check the flatness of exhaust manifold fitting surface.

Limit : 0.3 mm (0.012 in)

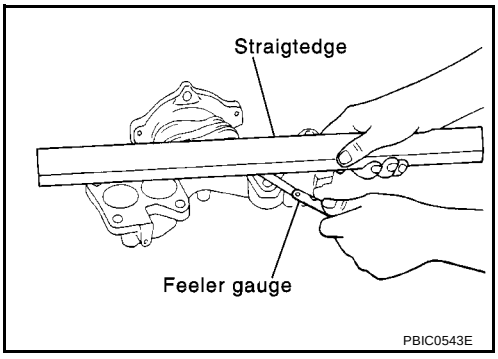

INSTALLATION

- Install in the reverse order of removal after this step.
- Tighten mounting nuts for exhaust manifold and catalytic converter assembly in order shown in figure.
- Before installing exhaust manifold support, apply liquid gasket to contact surface on engine side.
  Use Genuine Liquid Gasket or equivalent.

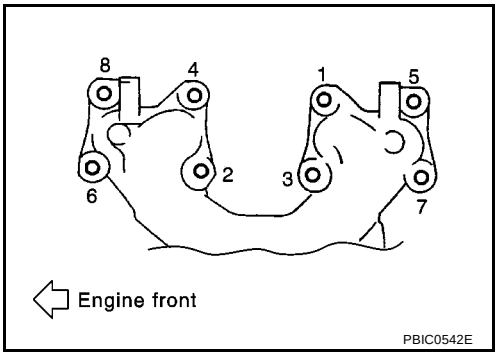

Installation of Heated Oxygen Sensor

CAUTION:

- **Do not over torque the heated oxygen sensor. Doing so may cause damage to the heated oxygen sensor, resulting in the MI coming on.**

Disassembly and Assembly

EBS00QEB

M/T MODELS

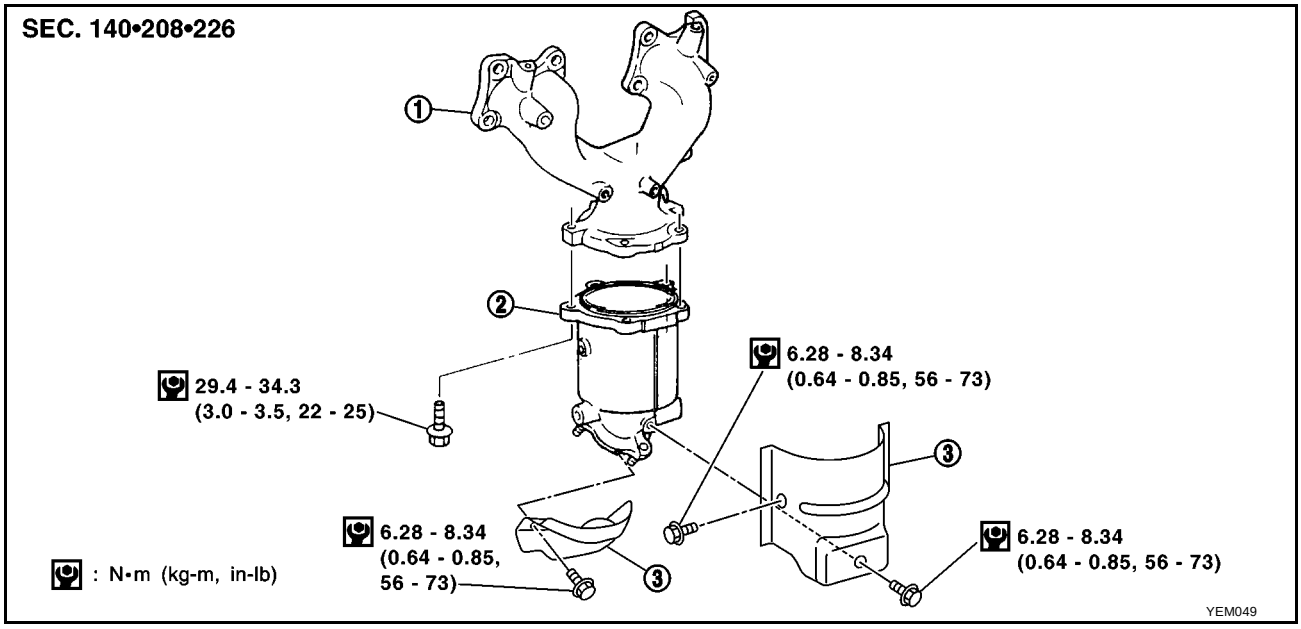

1. Exhaust manifold
2. Catalytic converter
3. Catalytic converter cover

A/T MODELS

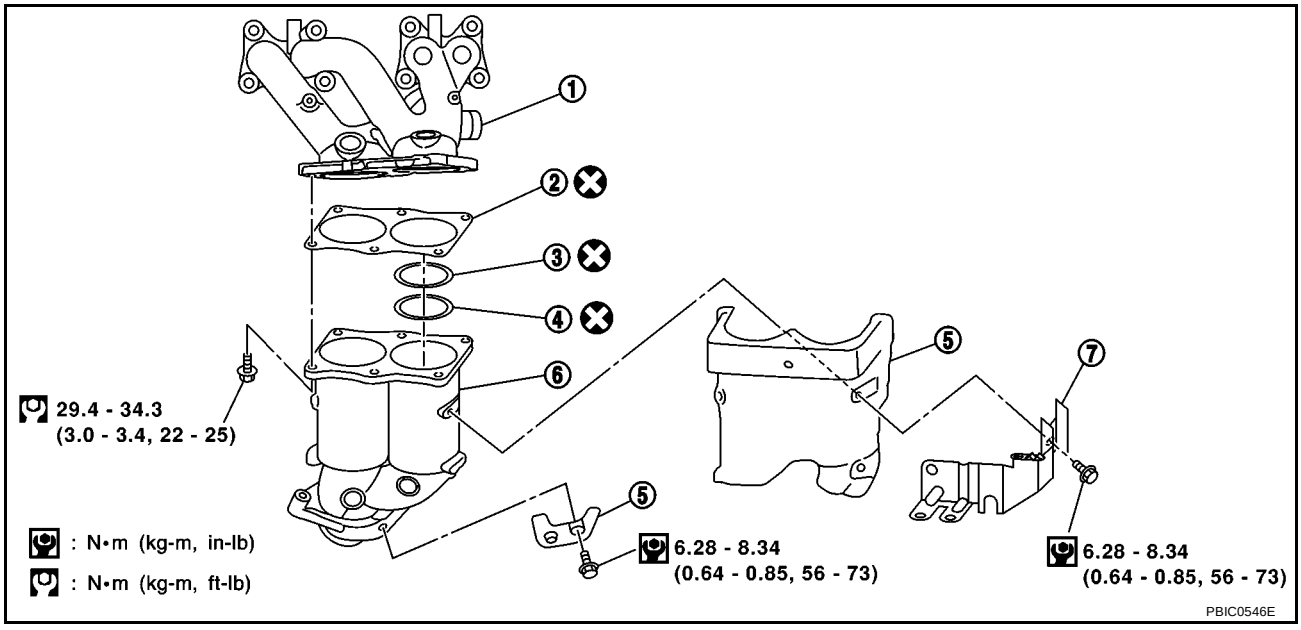

1. Exhaust manifold
2. Gasket
3. Converter cap
4. Wire mesh washer
5. Catalytic converter cover
6. Catalytic converter
7. Heated oxygen sensor harness bracket

DISASSEMBLY

1. Remove catalytic converter cover.
2. Disconnect exhaust manifold and catalytic converter.

CAUTION:

Be careful not to damage catalytic converter.

ASSEMBLY

- Assemble in reverse order of disassembly.

OIL PAN AND OIL STRAINER

PFP:11110

Removal and Installation

EBS00QEC

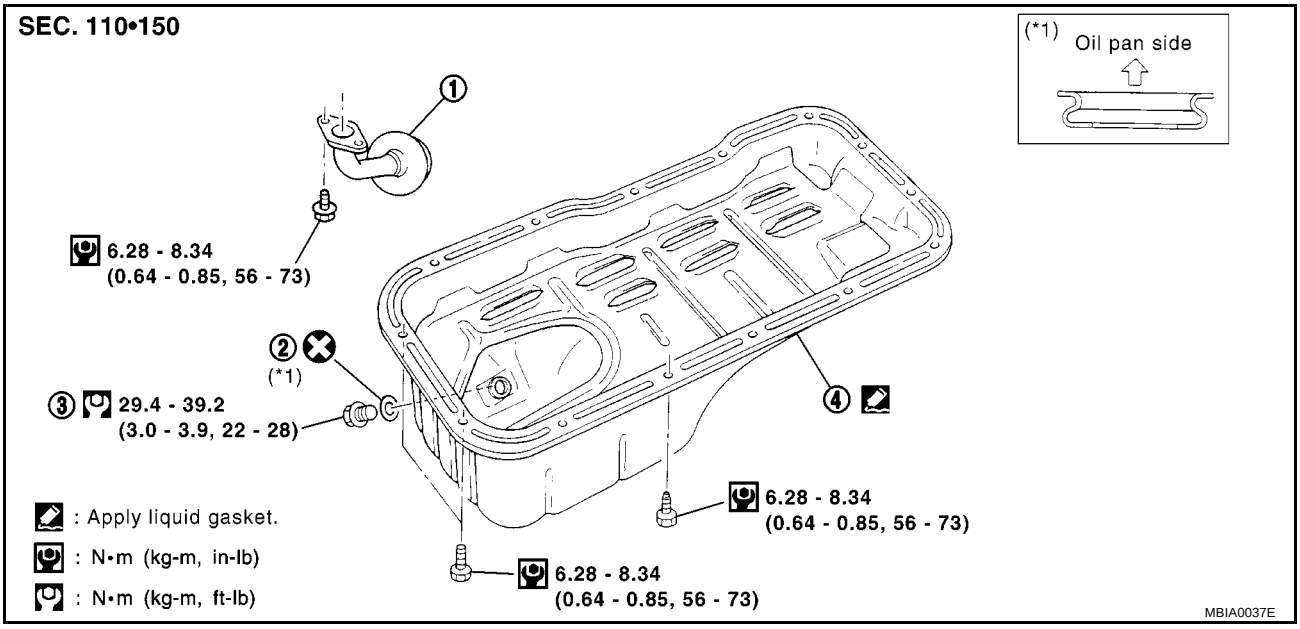

1. Oil strainer
2. Washer
3. Drain plug
4. Oil pan

REMOVAL

WARNING:

To avoid the danger of being scalded, never drain the engine oil when the engine is hot.

1. Remove engine RH undercover.
2. Drain engine oil. Refer to LC-8, “Changing Engine Oil”.
3. Remove exhaust front tube. Refer to FE-11, “Exhaust System”.
4. Using a transmission jack, be sure to support the bottom of transsexual, and remove center member.
5. Remove gusset and engine rear plate (lower) [A/T vehicle].

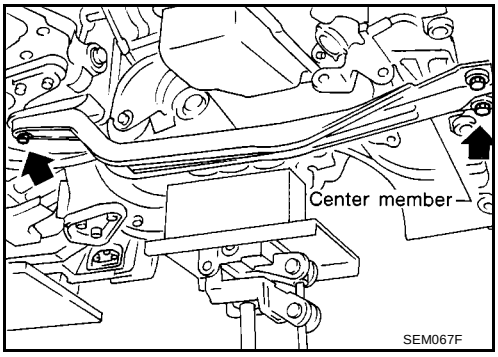

6. Loosen and remove mounting nuts and bolts in reverse order shown in figure.

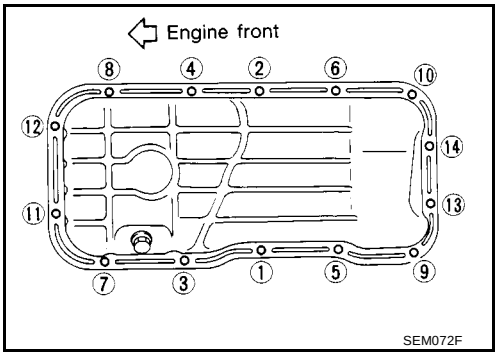

7. Insert Tool (Seal cutter) between oil pan and cylinder block. Slide tool by tapping on the side of the tool with a hammer. Remove oil pan.
8. Remove oil strainer.

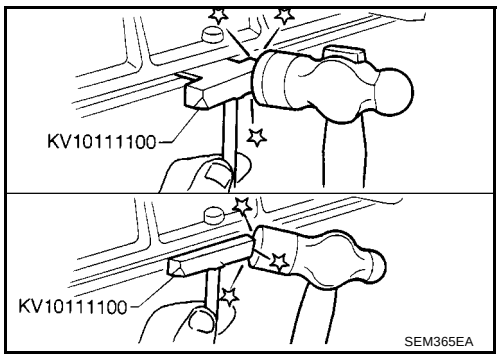

INSTALLATION

1. Install oil strainer.

   NOTE:
   Gasket and O-ring are not used for sealed area with oil pump.
2. Install oil pan drain plug.
   - Referring to “Components”, install drain plug washer.
3. Apply a continuous bead of liquid gasket to position shown in figure.
   Use Genuine Liquid Gasket or equivalent.

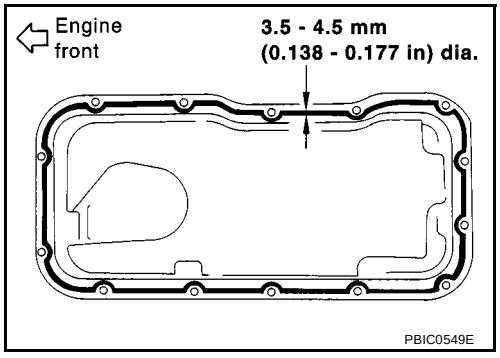

4. Tighten mounting nuts and bolts in order shown in figure.
   - Install mounting nuts and bolts as follows.

   Mounting bolt:

   [Shank length under head 10 mm (0.39 in)] : Nos. 1 - 10, 13, 14

   [Shank length under head 12 mm (0.47 in)] : Nos. 11, 12

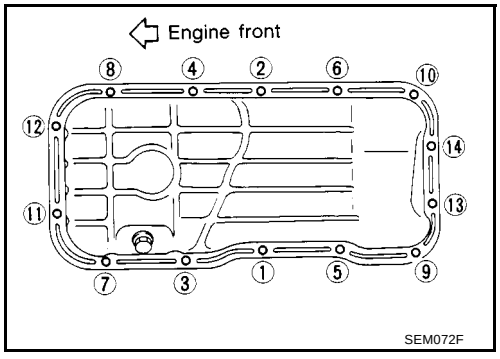

5. Install center member.
   Refer to ENGINE ASSEMBLY, EM-70, "Removal and Installation" .
6. Install remaining parts in the reverse order of removal.

INSPECTION AFTER INSTALLATION

- Check for leakage of engine oil when engine is warmed.
- Pour engine oil or start engine at least 30 minutes after oil pan is installed.

IGNITION COIL

PFP:22448

Removal and Installation

EBS00QED

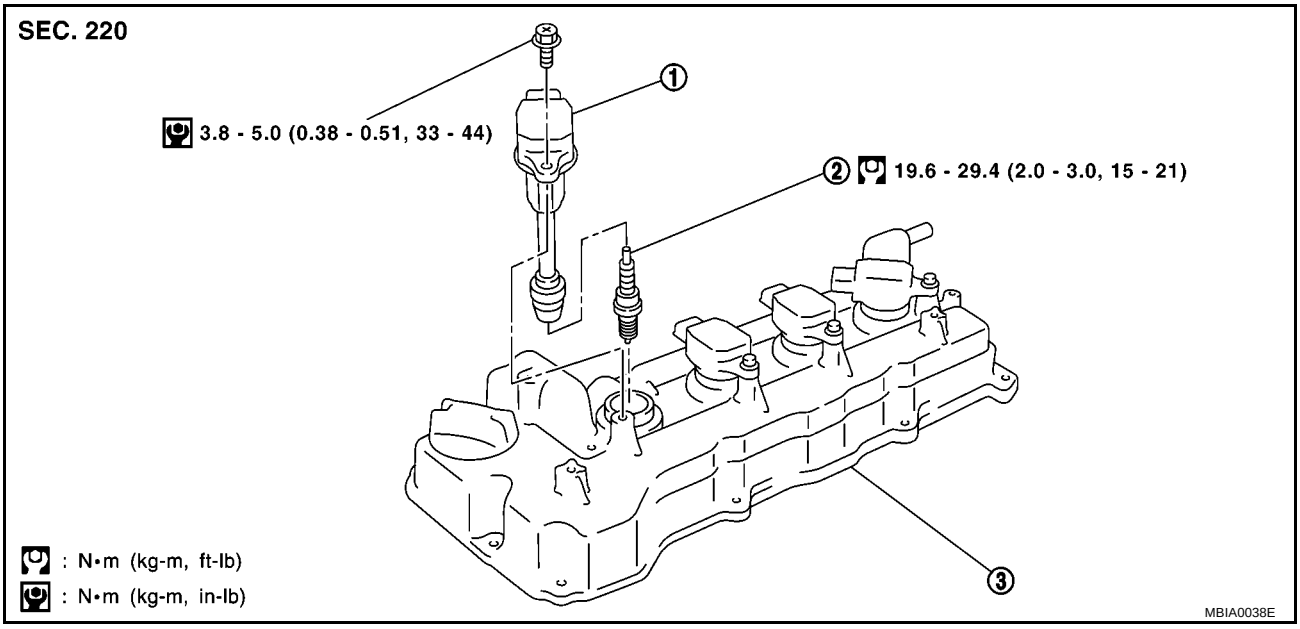

1. Ignition coil
2. Spark plug
3. Rocker cover

REMOVAL

1. Remove ignition coil harness connector from ignition coil.
2. Remove ignition coil.

CAUTION:

- **Do not shock it.**
- **Do not disassemble it.**

INSTALLATION

- Install in the reverse order of removal.

SPARK PLUG (CONVENTIONAL)

PFP:22401

Removal and Installation

EBS00QEE

REMOVAL

1. Disconnect ignition coil harness connector from ignition coil.
2. Remove ignition coil.
3. Remove spark plugs with a spark plug wrench (commercial service tool).

Spark plug

Make	NGK	Champion
Standard type	LFR5A-11	REC10YC4
Hot type	LFR4A-11	—
Cold type	LFR6A-11	—

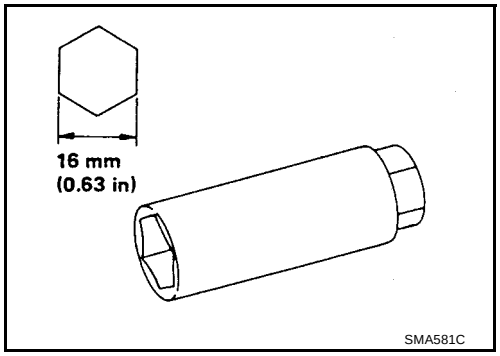

INSPECTION AFTER REMOVAL

Check spark plug gap. Adjust or replace if necessary.

Standard : 1.0 - 1.1 mm (0.039 - 0.043 in)

- Use a wire brush for cleaning, if necessary.

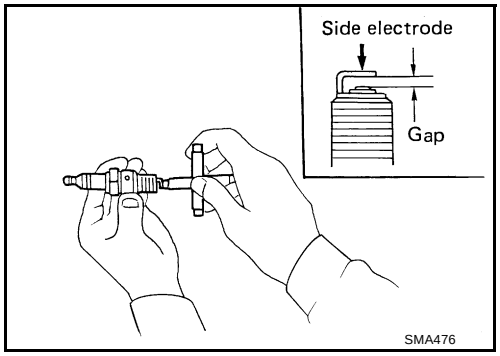

INSTALLATION

Install in the reverse order of removal, paying attention to the following.

Spark plug:

: 19.6 - 29.4 N·m (2.0 - 3.0 kg-m, 15 - 21 ft-lb)

FUEL INJECTOR AND FUEL TUBE

PFP:16600

Removal and Installation

EBS00QEF

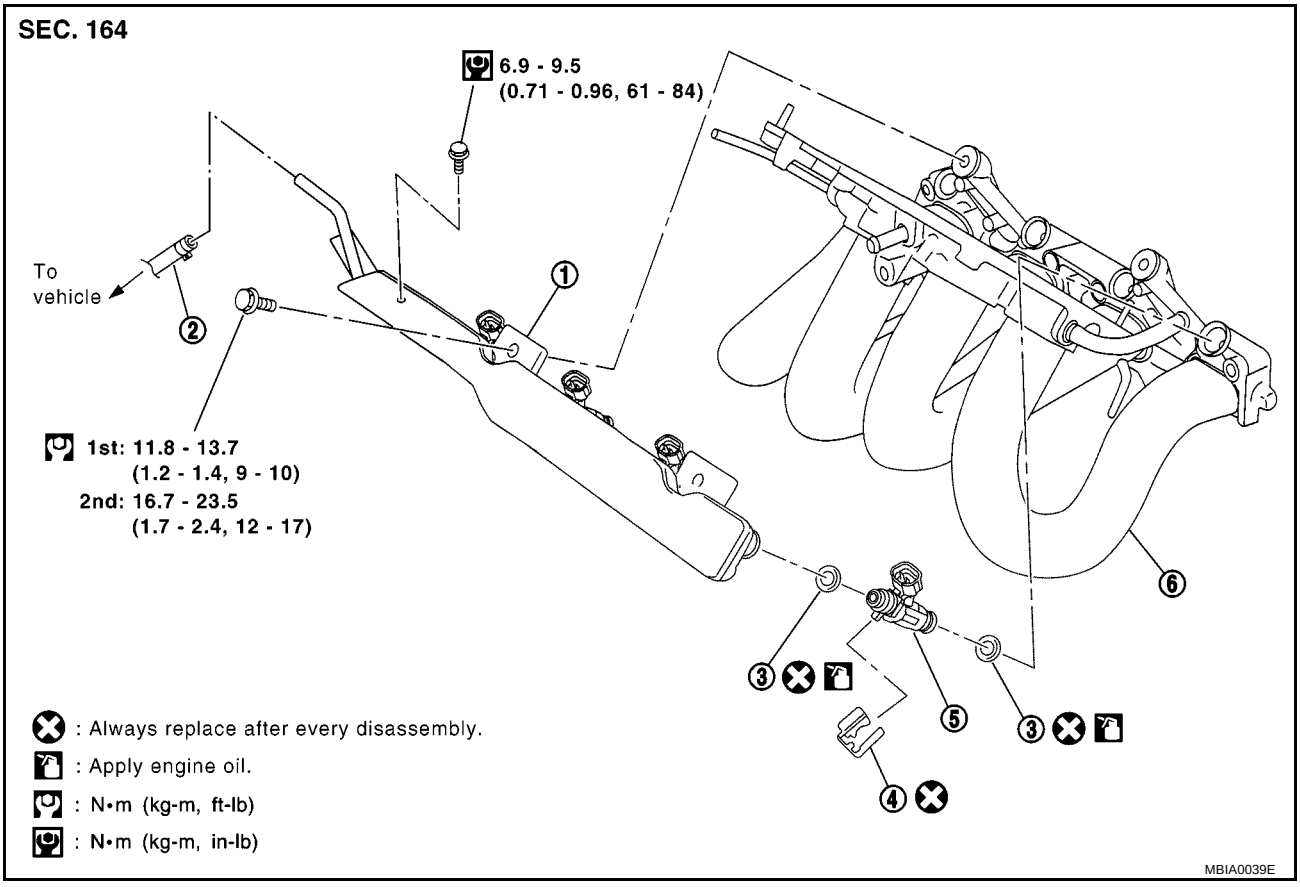

1. Fuel tube	2. Fuel feed hose	3. O-ring
4. Clip	5. Fuel injector	6. Intake manifold

CAUTION:

- **Apply new engine oil when installing the parts that specified to do so in the figure.**
- **Do not remove or disassembly parts unless instructed as shown in the figure.**

REMOVAL

1. Release fuel pressure. Refer to EC-52, "FUEL PRESSURE RELEASE" (WITH EURO-OBD), EC-579, "FUEL PRESSURE RELEASE" (WITHOUT EURO-OBD).
2. Disconnect harness for fuel injector, and move it aside.
3. Remove fuel hose.

   CAUTION:
   After removal, install blind plug to fuel hose to prevent the fuel from draining.
4. Remove fuel tube and injector assembly with the following procedure:

a. Loosen mounting bolts in reverse order shown in figure.

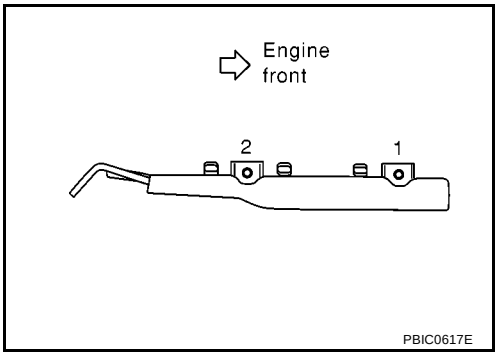

b. Pull out fuel injector/fuel tube assembly toward engine rear side.

CAUTION:
Do not touch fuel injector nozzle with intake manifold or other parts.

5. Remove fuel injector from fuel tube.
   - Release clip and remove it.
   - Pull fuel injector straight out of fuel tube.

   CAUTION:
   - **Be careful not to damage nozzle part.**
   - **Avoid any impact such as a dropping.**
   - **Do not disassemble or adjust it.**

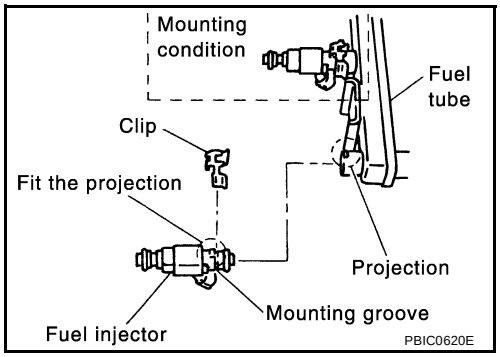

INSTALLATION

1. When installing O-ring to fuel injector, follow instructions described below.

   CAUTION:
   - **Handle O-ring with bare hands. Never wear gloves.**
   - **Lubricate O-ring with new engine oil.**
   - **Do not clean O-ring with solvent.**
   - **Make sure that O-ring and its mating part are free of foreign material.**
   - **Be careful not to scratch it with a tool or fingernails during installation. Also be careful not to twist or stretch O-ring. If O-ring is stretched while being attached, do not insert it into fuel tube immediately.**
   - **Insert O-ring straight into fuel tube. Do not angle or twist it.**

2. Install fuel injector to fuel tube with the following procedure.

a. Insert clip into clip mounting groove on fuel injector.
   - Insert clip so that lug “A” of fuel injector matches notch “A” of the clip.

   CAUTION:
   - **Do not reuse clip. Replace it with a new one.**
   - **Be careful to keep clip from interfering with O-ring. If interference occurs, replace O-ring.**

b. Insert fuel injector into fuel tube with clip attached.
   - Insert it while matching it to the axial center.
   - Insert fuel injector so that lug “B” of fuel tube matches notch “B” of the clip.
   - Make sure that fuel tube flange is securely fixed in flange fixing groove on clip.

c. Make sure that installation is complete by checking that fuel injector does not rotate or come off.

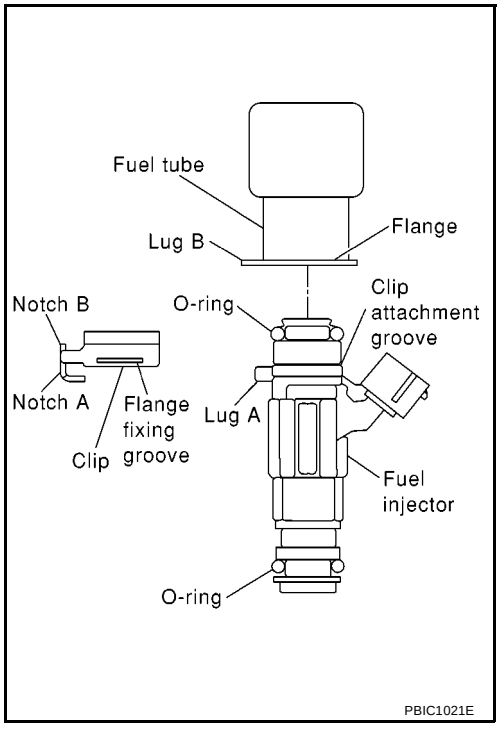

3. Tighten mounting bolts in two steps in numerical order shown in figure.

   1st step : 11.8 - 13.7 N·m (1.2 - 1.4 kg-m, 9 - 10 ft-lb)

   2nd step : 16.7 - 23.5 N·m (1.7 - 2.4 kg-m, 12 - 17 ft-lb)

4. Install fuel feed hose.

   CAUTION:
   Install hose clamp avoiding interference with bulge, and securely tighten it

5. Install remaining parts in the reverse order of removal.

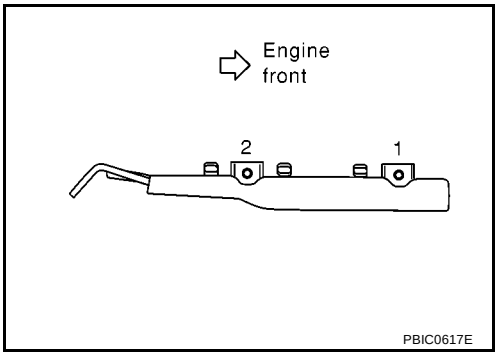

INSPECTION AFTER INSTALLATION

- Check for fuel leakage with following procedure.

1. Turn ignition switch ON (do not start engine), and check connections for leakage by applying fuel pressure to fuel piping.
2. Start engine, and re-check connections for fuel leakage by increasing engine speed.

ROCKER COVER

PFP:13264

Removal and Installation

EBS00QEG

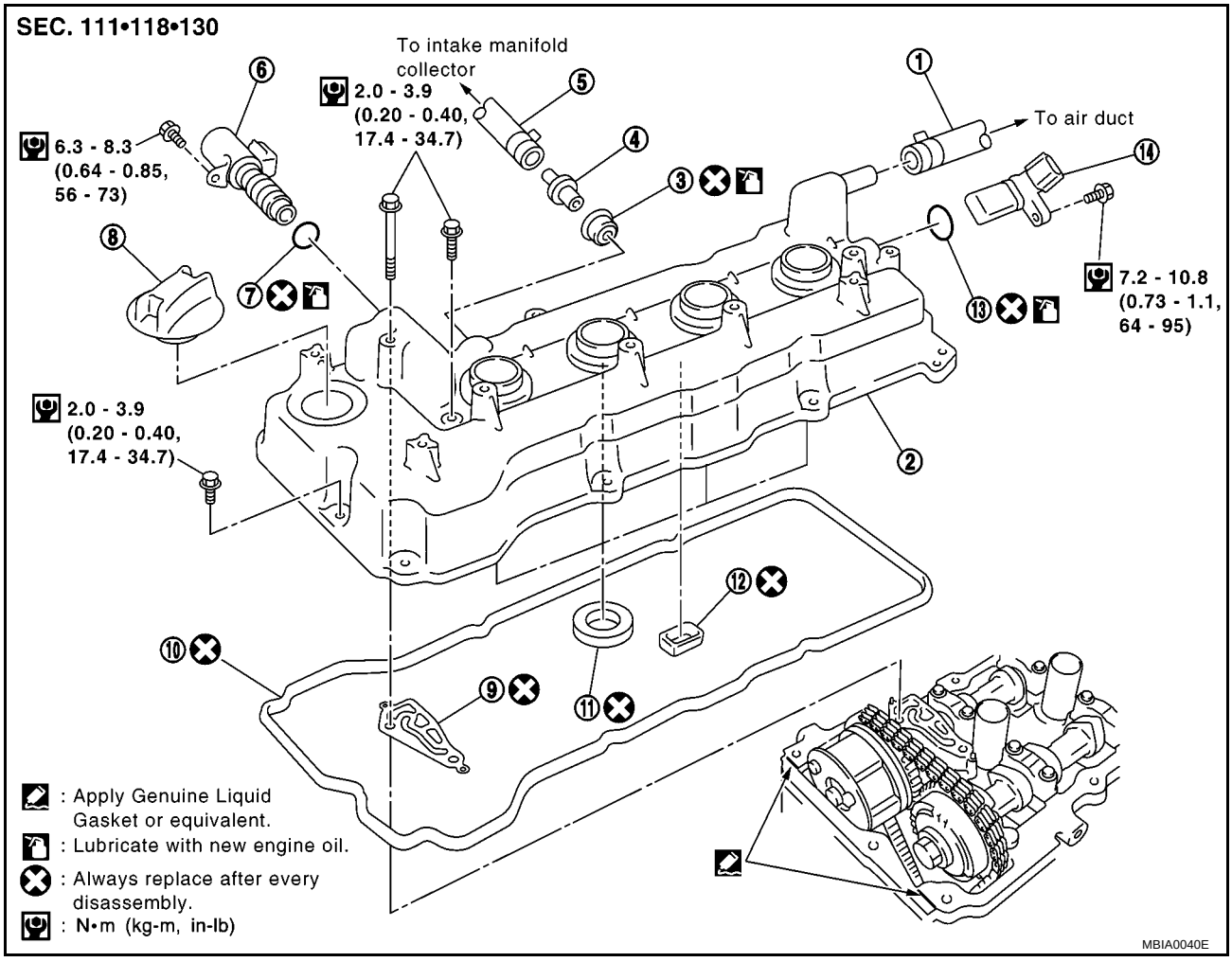

1.	PCV hose	2.	Rocker cover	3.	Grommet
4.	PCV control valve	5.	PCV hose	6.	Intake valve timing control solenoid valve
7.	O-ring	8.	Oil filter cap	9.	Gasket
10.	Gasket	11.	Rocker cover oil seal	12.	Gasket
13.	O-ring	14.	Camshaft position sensor (PHASE)		

CAUTION:
Apply new engine oil when installing the parts that specified to do so in the figure.

REMOVAL

1. Move harnesses on top surface and right side of rocker cover, and move them aside.
2. Remove ignition coil. Refer to EM-27, "Removal and Installation" .
3. Disconnect PCV hoses on rocker cover side.
4. If necessary, remove PCV control valve.
5. If necessary, remove intake valve timing control solenoid valve and camshaft position sensor (PHASE).

   CAUTION:
   - **Do not shock it.**
   - **Do not disassemble it.**
   - **Tip of camshaft position sensor (PHASE) generates strong magnetic fields. Keep it away from metal particles or objects affected by magnetic fields.**

6. Loosen bolts in reverse order shown in the figure.

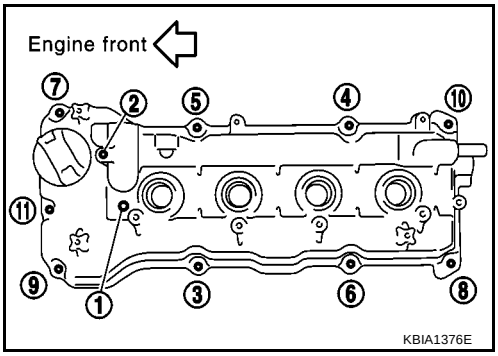

7. If replacement is necessary, remove rocker cover oil seal using flat-head screwdriver.

CAUTION:
Be careful not to damage rocker cover.

INSTALLATION

1. Install rocker cover oil seal.
   - Using drift with outer diameter 97 mm (3.82 in) and inner diameter 83 mm (3.27 in) to 88 mm (3.46 in) (commercial service tool), press oil seal in.

   NOTE:
   There are 2 types of oil seal. If oil seal with flat bottom surface is pressed in, drift with any inner diameter can be used.
   - Press oil seal in until it is flush with installation surface.

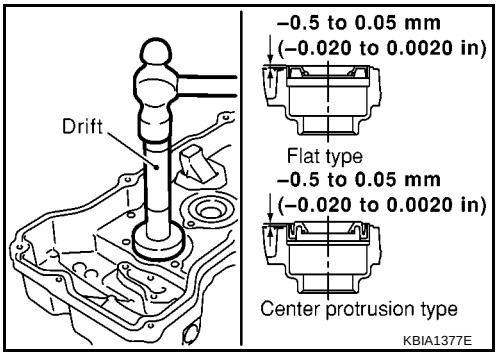

2. Install rocker cover in following steps.

a. Install gasket on top of No. 1 camshaft bracket.
   - Position gasket aligning its shape with camshaft bracket side. Align positioning stopper pin with hole on gasket, and install.

b. Install gasket (for circumference, square type) to installation groove of rocker cover.

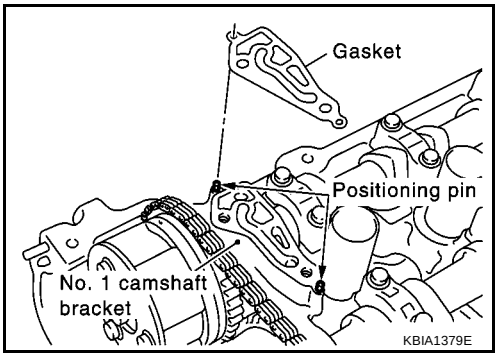

c. Apply liquid gasket to positions shown in figure, then install rocker cover.

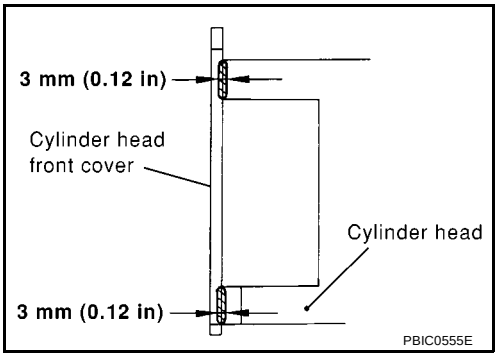

d. Tighten mounting screws to specified torque in 2 or more steps in numerical order shown in figure.

Bolt length:	Bolt position
25 mm (0.98 in)	: 1
65 mm (2.56 in)	: 2
20 mm (0.79 in)	: Except the above (all circumference)

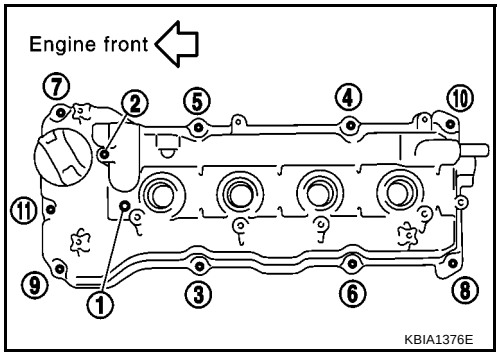

3. Install intake valve timing control solenoid valve and camshaft position sensor (PHASE).
   - Tighten bolt after fully inserting it into rocker cover.
4. Install PCV valve.
   - Insert until flange contacts grommet tightly.
5. Install remaining parts in the reverse order of removal.

CAMSHAFT

PFP:13001

Removal and Installation

EBS00QEH

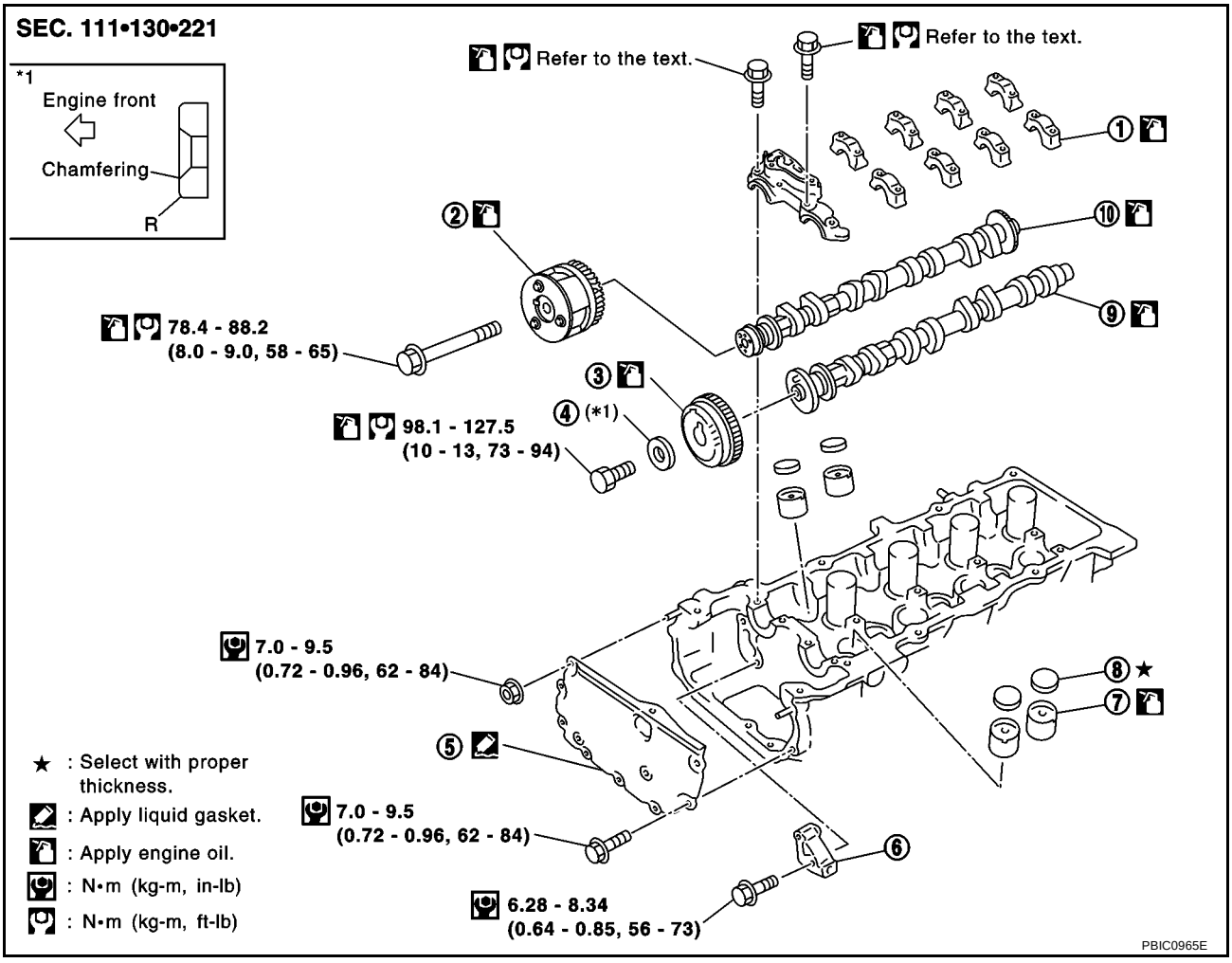

1. Camshaft bracket	2. Camshaft sprocket (INT)	3. Camshaft sprocket (EXH)
4. Washer	5. Cylinder head front cover	6. Chain tensioner
7. Valve lifter	8. Adjusting shim (If so equipped)	9. Camshaft (EXH)
10. Camshaft (INT)		

CAUTION:
Prior to installation, apply engine oil to the parts marked in the figure.

REMOVAL

1. Remove rocker cover. Refer to EM-32, "Removal and Installation" .
2. Remove cylinder head front cover.
   - Move harness secured to front surface beforehand.
3. Set No. 1 cylinder at TDC of its compression stroke.

a. Remove RH splash cover (integrated with undercover).

b. Rotate crankshaft pulley clockwise and align yellow paint mark with timing indicator.

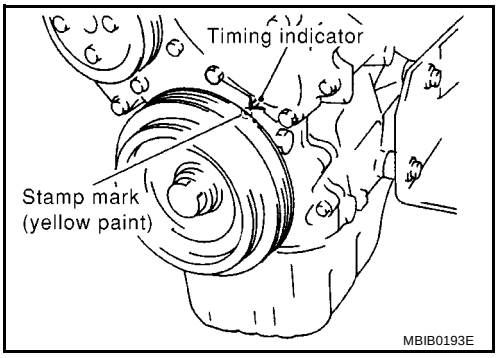

c. Confirm mating marks stamped on intake and exhaust sprockets are located as shown.
   - If not, rotate crankshaft pulley as shown and align them.

d. Referring to mating marks on intake and exhaust camshaft sprockets, put paint mating marks on timing chain links.

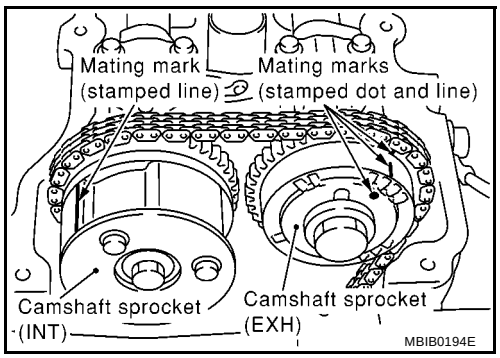

4. Set intake camshaft sprocket to most advanced position.

CAUTION:

Removal/installation of intake camshaft sprocket is required to maintain most advanced position because of following reasons. Therefore, follow procedure exactly.

- **Sprocket and vane (camshaft in front) rotate and become offset within specific angle range.**
- **When engine is stationary, vane is located at most retarded position. Vane is fixed to sprocket by internal lock pin. Therefore, it does not rotate.**
- **If camshaft sprocket mounting bolts are turned under above circumstance, lock pin will be damaged by lateral load (shear stress). It may cause non-standard operation.**
- Set intake camshaft sprocket to most advanced position as follows.

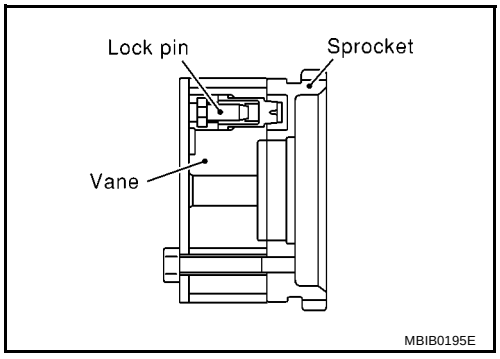

NOTE:

"Rotating direction" means direction viewed from engine front side.

CAUTION:

Do not remove chain tensioner before performing this step.

a. Using a wrench, hold hexagonal part so that intake camshaft does not move.

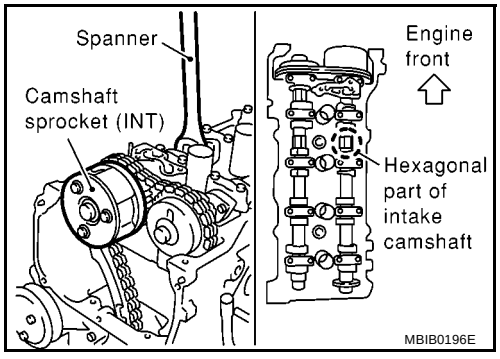

b. Using an air gun, apply air pressure to intake valve timing control solenoid valve advanced side oil passage on top surface of No. 1 camshaft bracket.

Compression pressure

: 300 kPa (3.00 bar, 3.06 kg/cm^2 , 43.5 psi) or more

- Keep applying air pressure until step "d" is completed.

CAUTION:

- **Be careful not to damage oil passage from interference of air gun tip.**
- **Thoroughly wipe off oil before applying air pressure. When applying air pressure, cover around air gun using a rag. Wear protective glasses if necessary.**

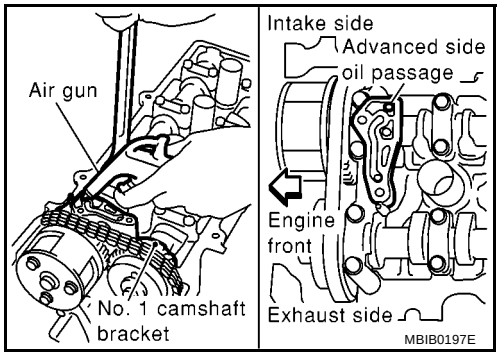

c. Slowly turn intake camshaft in direction A (counterclockwise: intake manifold side).
   - Perform while applying air pressure.

   CAUTION:
   Be careful not to dislocate camshaft retaining spanner.

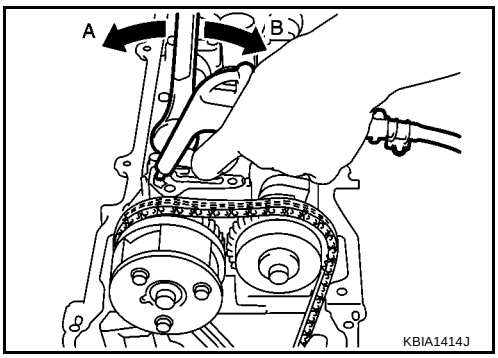

d. During above step, operating click (a sound indicating internal lock pin is disengaged) is heard from inside of intake camshaft sprocket. After hearing it, slowly turn intake camshaft in direction B (clockwise: exhaust manifold side), and set to most advanced position.
   - Perform while applying air pressure.
   - When vane rotates solely against sprocket, lock pin is disengaged even if operating click is not heard.
   - If lock pin is not disengaged, apply vibration by jiggling the camshaft with a spanner.
   - If lock pin is not disengaged with above step, hit intake camshaft in front by using plastic hammer.

e. The following status indicates that most advanced position is achieved: vane starts rotating on its own, then sprocket also starts rotating when camshaft is turned. When above status is achieved, this step is complete.
   - Most advanced position is confirmed when stopper pin groove and lock pin breathing groove are aligned.

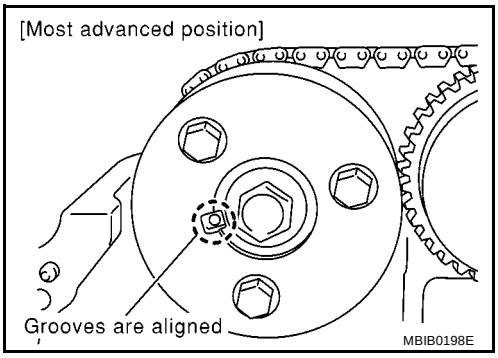

f. Stop air, insert stopper pin [approximately 3 mm (0.12 in) dia., length of inserted part is approximately 15 mm (0.59 in)] into pinhole on camshaft sprocket to fix most advanced position.

   NOTE:
   In the figure, an Allen wrench [a/f 2.5 mm (0.091 in), short part: approximately 20 mm (0.79 in), long part: approximately 50 mm (1.97 in)] is used for stopper pin as an example.

   CAUTION:
   Load (spring reaction force) is not applied to stopper pin. Pin is easily detached. Therefore, secure it with vinyl tape to prevent detachment.

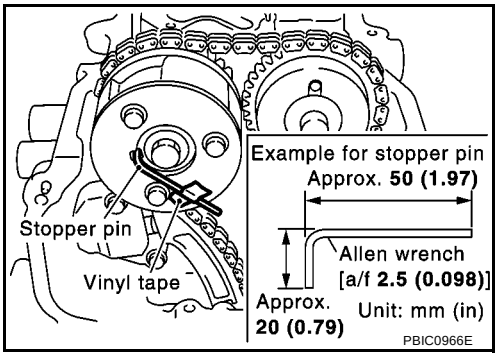

5. Remove chain tensioner.
   - Remove in the following order.

a. Press plate down, and release stopper tab.
b. Insert plunger into tensioner body until it stops.
c. Secure plate by passing stopper pin (such as a hard wire) through plate hole and body hole. (Plunger is also secured.)
d. Remove mounting bolts, and remove chain tensioner.

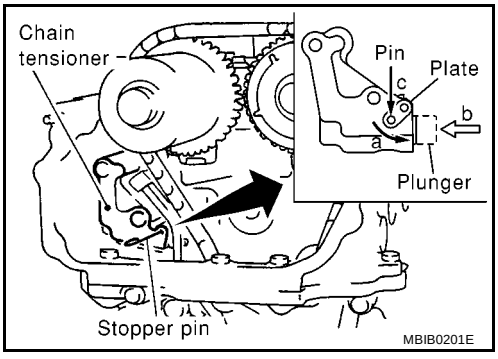

6. While holding hexagonal part of camshaft with a spanner, loosen mounting bolts and remove intake and exhaust camshaft sprockets.

   CAUTION:
   - **Be careful that tool does not interfere with A/C piping.**
   - **Avoid securing camshaft at other than hexagonal part and loosening mounting bolts by utilizing tension of timing chain.**

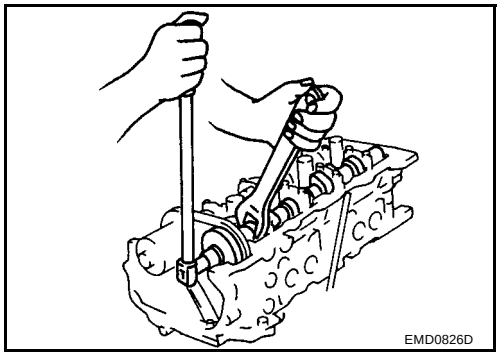

   - Handle intake camshaft sprocket, taking care of following.

   CAUTION:
   - **Secure stopper pin with vinyl tape to prevent detachment.**
   - **Avoid dropping it or subjecting it to impact.**
   - **Do not disassemble. (Do not loosen 3 bolts on front surface.)**

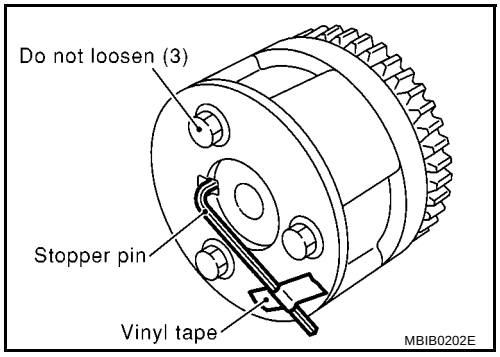

   NOTE:
   If stopper pin is detached and lock pin is engaged at most retarded position during removal, recover as follows.

a. Reinstall stopper pin to intake camshaft, and tighten intake camshaft sprocket mounting bolts so that air does not leak.

   CAUTION:
   Tightening torque for mounting bolts must be minimum so that air does not leak, preventing damage on internal lock pin.

b. Apply air pressure to disengage lock pin, and turn vane to most advanced position. (This step can be performed with timing chain removed.)

c. Reinstall stopper pin.

d. Remove intakecamshaft sprocket from camshaft.

7. Remove camshaft brackets.
   - Loosen mounting bolts in several steps in reverse order shown in figure.

8. Remove camshaft.

   CAUTION:
   Be careful not to damage signal plate on rear end of intake camshaft and crankshaft.

9. Remove adjusting shims and valve lifters.
   - Identify installation position of each valve. Arrange removed valves so they cannot be mixed up.

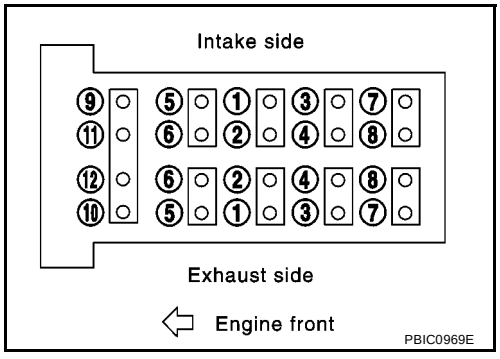

INSTALLATION

1. Install valve lifters and adjusting shims.
   - Install them in their original positions.
   - Install adjusting shim with its stamped mark facing downward (valve lifter side).

2. Install camshaft.
   - Intake and exhaust camshafts are distinguished by checking difference between front and rear end shapes.

     NOTE:
     Some exhust camshafts have a groove on the rear end.

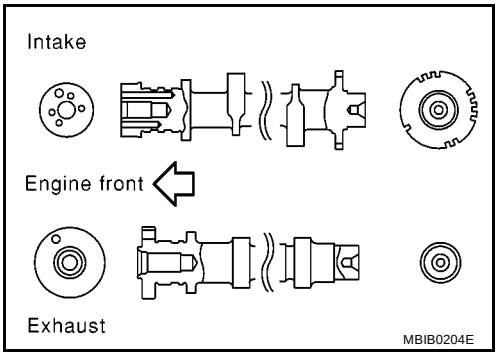

   - Install camshafts so that dowel pins on their front ends are positioned as shown.

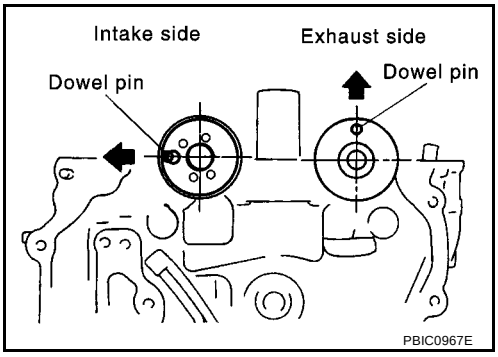

3. Install camshaft brackets.
   - Completely remove any foreign material on back surfaces of camshaft brackets and top surface of cylinder head.
   - Referring to marks on top surfaces of camshaft brackets, install them to their original positions and in their original directions.

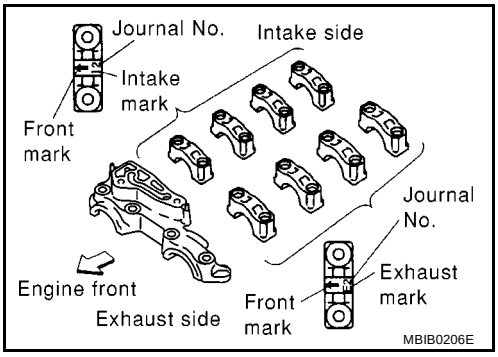

4. Tighten camshaft bracket mounting bolts as follows:

a. Different bolts are used depending on installation location. Refer to following and install appropriate bolts.

   Bolt color :

   1 to 10 in figure : black (reamer bolt)

   11 and 12 in figure : gold

b. First tighten bolts 9 through 12, then tighten bolts 1 through 8 in numerical order.

   : 2.0 N·m (0.2 kg-m, 18 in-lb)

c. Tighten in numerical order shown in figure.

   : 5.9 N·m (0.6 kg-m, 52 in-lb)

d. Tighten again in numerical order shown in figure.

   : 9.0 - 11.8 N·m (0.92 - 1.2 kg-m, 80 - 104 in-lb)

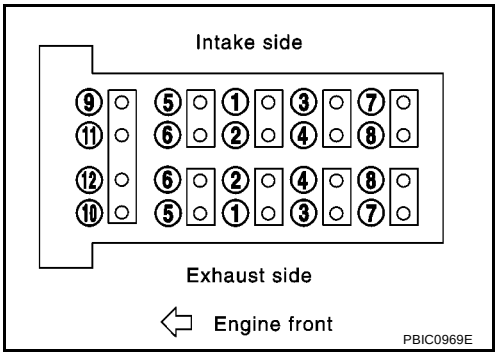

5. Install intake camshaft sprocket as follows.
   - Before installation, make sure that stopper pin is inserted in intake camshaft sprocket.

   NOTE:
   Service parts are provided with pin inserted.

CAUTION:

Stopper pin is easily detached. Secure it with vinyl tape to prevent detachment.

a. Install timing chain by aligning its mating mark (marked when timing chain is removed) with mark on camshaft sprocket.
   - Align dowel pin on camshaft front surface and pinhole on sprocket backside, then install.

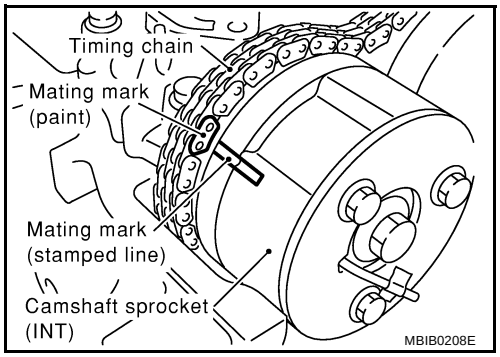

b. While holding hexagonal part of camshaft with a spanner, tighten intake camshaft sprocket mounting bolts.
   - Make sure that stopper pin is not detached.

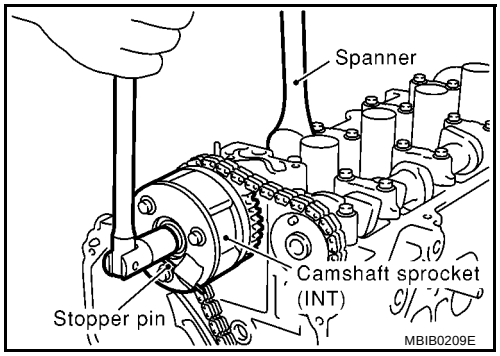

6. Install exhaust camshaft sprocket as follows.

a. Install timing chain by aligning its mating mark (marked when timing chain is removed) with mark on camshaft sprocket.
   - Align dowel pin on camshaft front surface and pinhole on sprocket, then install.

b. While holding hexagonal part of camshaft with a spanner, tighten exhaust camshaft sprocket mounting bolts.

   NOTE:
   Tightening torque is different from intake side tightening torque.

c. Make sure that mating marks on intake/exhaust camshaft sprockets and mating mark on timing chain are aligned.

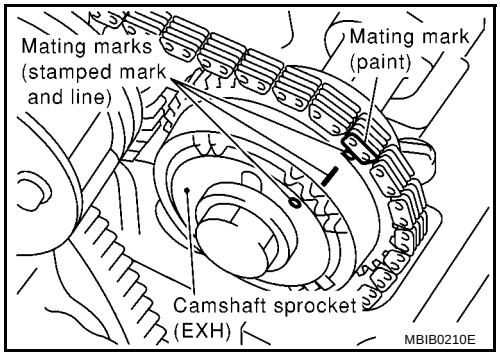

7. Install chain tensioner.
   - Hold plate and plunger with a stopper pin, then install them.
   - After installation, remove stopper pin and release plunger.
   - Make sure again that mating marks on intake/exhaust camshaft sprockets and mating mark on timing chain are aligned.

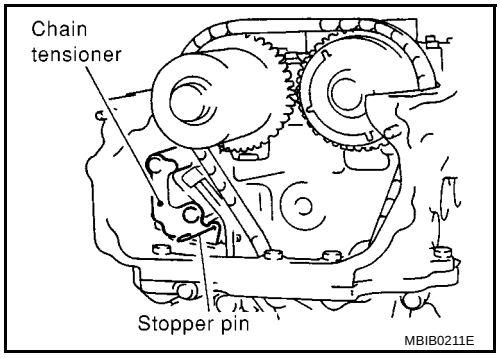

8. Remove stopper pin from intake camshaft sprocket.

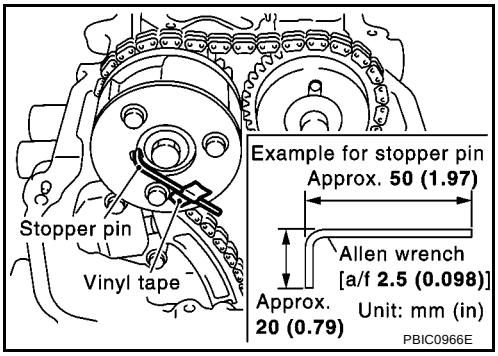

9. Slowly turn crankshaft pulley clockwise to set intake camshaft sprocket to most retarded position.

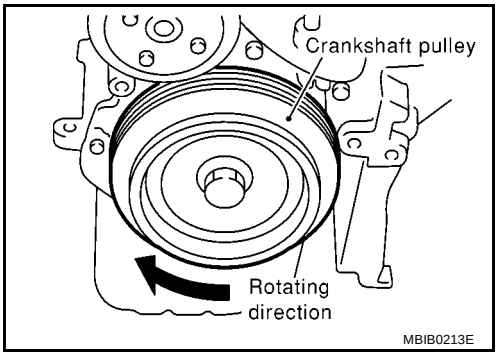

- Sprocket begins turning after crankshaft does. Once sprocket starts turning, keep turning crankshaft until the vane (camshaft) also begins turning. Most retarded position should now be achieved.
- Most retarded position is confirmed when stopper pin groove is at a clockwise offset from lock pin breathing groove.
- While turning crankshaft slightly more counterclockwise, confirm that lock pin is engaged when vane and sprocket turn together.

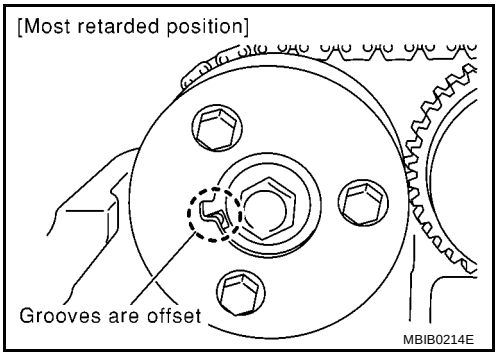

10. Install cylinder head front cover.
    - Apply liquid gasket (Use Genuine Liquid Gasket or equivalent) continuously as shown in figure.
    - Install it by aligning dowel pin on cylinder head.
11. Check and adjust valve clearance. Refer to EM-44, "Valve Lifter Clearance" .
12. From this step, install in the reverse order of removal.

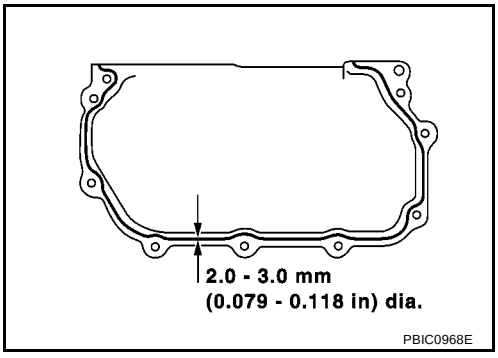

INSPECTION AFTER REMOVAL

Camshaft Runout

- Place a V-block on a surface plate to support No. 2 and No. 5 journals on camshaft.

  CAUTION:
  Do not support No. 1 journal (camshaft sprocket mounting side), because its diameter is different from that of the other 4 journals.
- Set a dial gauge vertically onto journal No. 3.
- Rotate the camshaft in one direction by hand and read indication on the gauge.
- A half of reading value is actual bend.

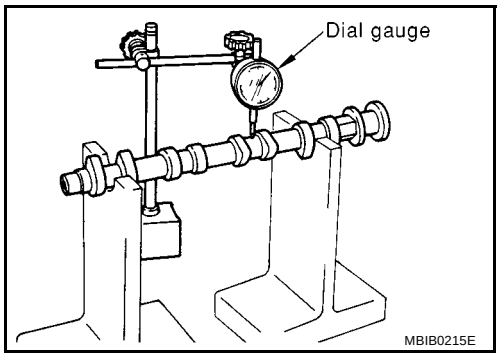

Standard : 0.02 mm (0.0008 in) or less

Camshaft Cam Height

- Measure with a micrometer.

Intake : 40.217 - 40.407 mm (1.5833 - 1.5908 in)
Exhaust : 39.205 - 39.395 mm (1.5435 - 1.5510 in)

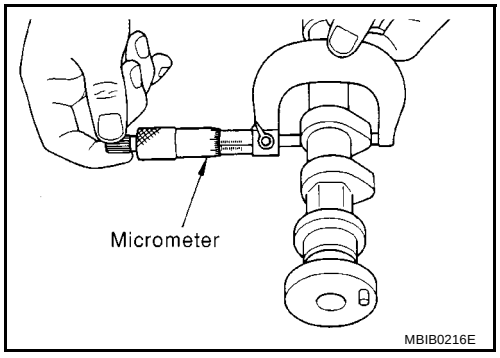

Camshaft Journal Clearance

Outer Diameter of Camshaft Journal

- Measure with a micrometer.

Standard
No. 1
: 27.935 - 27.955 mm (1.0998 - 1.1006 in) dia.
No. 2 to No. 5
: 23.935 - 23.955 mm (0.9423 - 0.9431 in) dia.

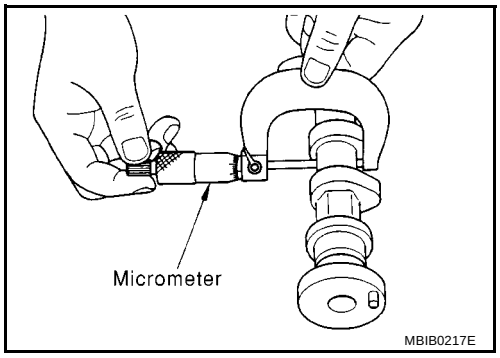

Inner Diameter of Camshaft Bracket

- Tighten camshaft bracket bolts to the specified torque.
- Using an inside micrometer, measure inner diameter of the camshaft bracket.

Standard
No. 1
: 28.000 - 28.021 mm (1.1024 - 1.1032 in) dia.
No. 2 to No. 5
: 24.000 - 24.021 mm (0.9449 - 0.9457 in) dia.

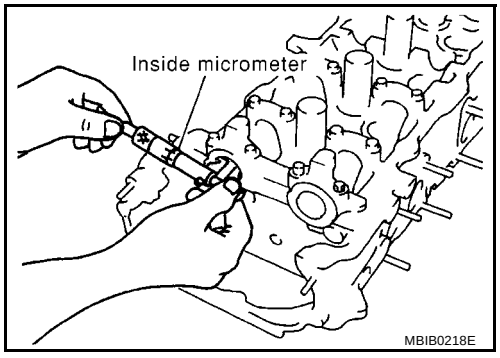

Calculation of Camshaft Journal Clearance

(Oil clearance) = (Camshaft bracket inner diameter) - (Camshaft journal outer diameter)

Standard

: 0.045 - 0.086 mm (0.0018 - 0.0028 in)

- If outside the standard, refer to standard of each unit part and replace camshaft or cylinder head as appropriate.

NOTE:
Camshaft bracket is machined with cylinder head. Replace them as cylinder head assembly.

Camshaft End play

- Position a dial gauge onto front end of camshaft in thrust direction. Read indication of dial gauge while moving camshaft back and forth (axial direction).

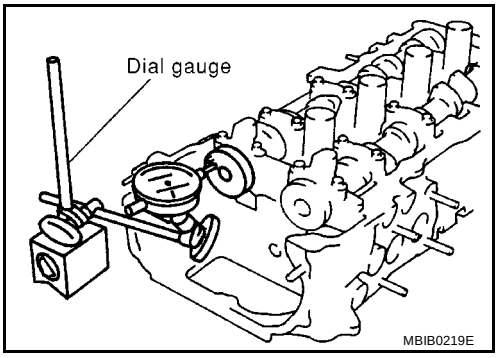

Standard

Intake : 0.070 - 0.143 mm (0.0028 - 0.0056 in)

Exhaust : 0.115 - 0.188 mm (0.0045 - 0.0074 in)

- If outside the standard, replace camshaft with new one. Then measure it again.
- If still outside the standard, replace cylinder head with new one.

Camshaft Sprocket Runout

- Using a dial gauge, measure camshaft sprocket runout.

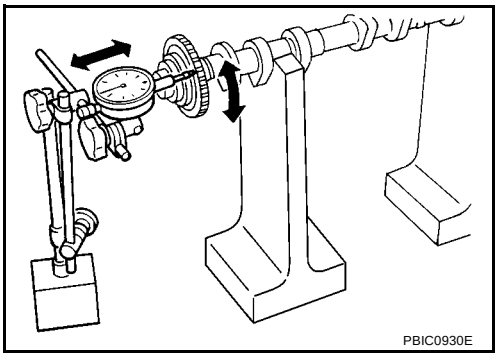

Limit:

Intake : 0.2 mm (0.008 in)

Exhaust : 0.15 mm (0.0059 in)

Valve Lifter and Adjusting Shim (Shim type)

Check surfaces of valve lifter and shim for cracks and wear.

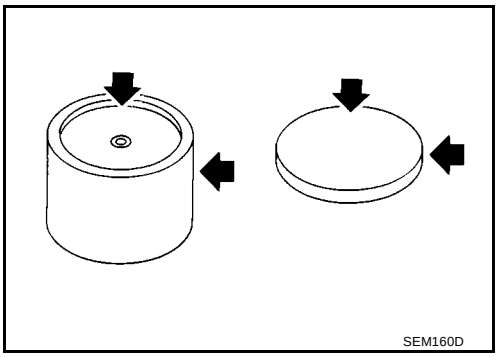

Valve Lifter Clearance

Outer Diameter of Valve Lifter

- Measure outer diameter with a micrometer.

  Standard : 29.960 - 29.975 mm (1.1795 - 1.1801 in) dia.

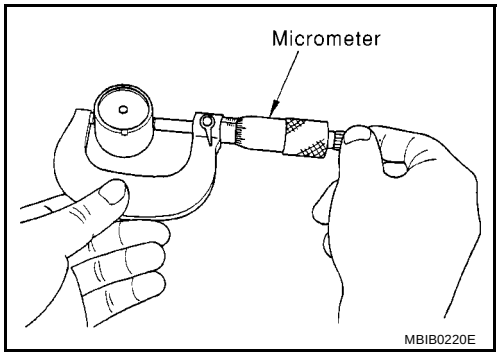

Valve Lifter Hole Diameter

- Using an inside micrometer, measure valve lifter hole diameter on cylinder head.

  Standard : 30.000 - 30.021 mm (1.1811 - 1.1819 in) dia.

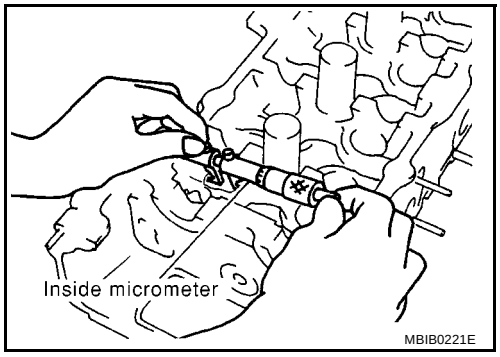

Calculation of Valve Lifter Clearance

(Clearance) = (Valve lifter hole inner diameter) - (Valve lifter outer diameter)

Standard : 0.025 - 0.061 mm (0.0010 - 0.0024 in)

- If outside the standard, refer to standard of each OD and hole ID and then replace valve lifter or cylinder head as appropriate.

Valve Lifter (Shimless type)

- Check if surface of valve lifter has any wear or cracks.

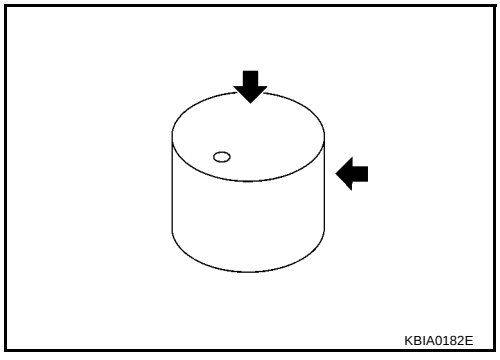

Valve Lifter Clearance

Outer Diameter of Valve Lifter

- Measure outer diameter of valve lifter.

  Valve lifter outer diameter (Intake and exhaust)
  : 29.960 - 29.975 mm (1.1795 - 1.1801 in) dia.

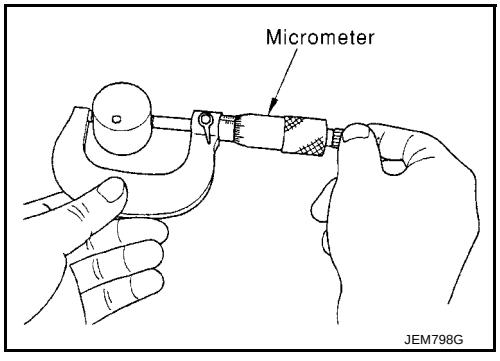

Valve Lifter Hole Diameter

- Using inside micrometer, measure diameter of valve lifter hole of cylinder head.

Standard (Intake and exhaust)

: 30.000 - 30.021 mm (1.1811 - 1.1819 in) dia.

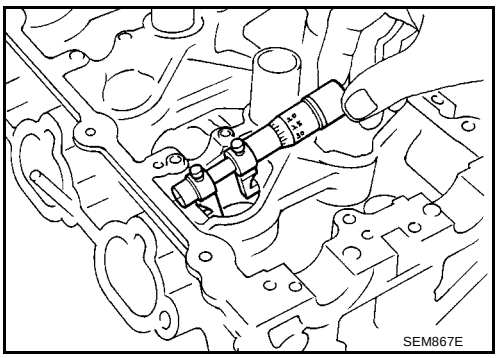

Calculation of Valve Lifter Clearance

(Valve lifter clearance) = (hole diameter of valve lifter) – (outer diameter of valve lifter).

Standard (Intake and exhaust)

: 0.025 - 0.061 mm (0.0010 - 0.0024 in)

- When out of specified range, referring to each specification of outer and inner diameter, replace either or both valve lifter and cylinder head.

Valve Clearance

EBS00QEI

INSPECTION

- The following procedure is applicable when: Components related to camshafts or valves are removed, installed, or replaced. Drivability concerns (poor starting, poor idling, noise) are caused by valve clearance aging.

1. Warm up engine, and stop.
2. Remove RH splash cover (integrated with undercover).
3. Remove rocker cover. Refer to EM-32, "Removal and Installation" .
4. Turn crankshaft pulley clockwise (viewed from front) to align yellow paint with timing indicator.
5. At this point, confirm that both intake and exhaust cam noses on No. 1 cylinder face outward. (No. 1 cylinder is at TDC of its compression stroke.)
   - If not, turn crankshaft pulley more.

   NOTE:
   Or, valves to be checked when No. 4 cylinder is at TDC of its compression stroke can be checked first following step 8.

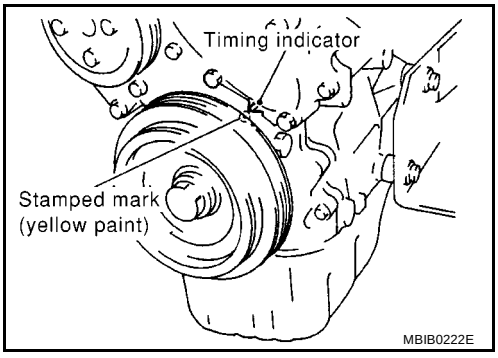

6. Referring to figure, measure valve clearances of valves with × in table below using a thickness gauge.

Cylinder	No.1		No.2		No.3		No.4	
Valve	INT	EXH	INT	EXH	INT	EXH	INT	EXH
No. 1 cylinder at TDC of its compression stroke	×	×	×			×		

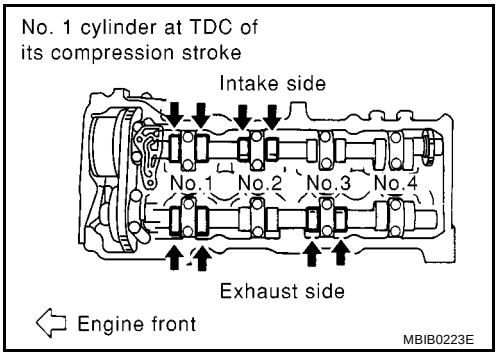

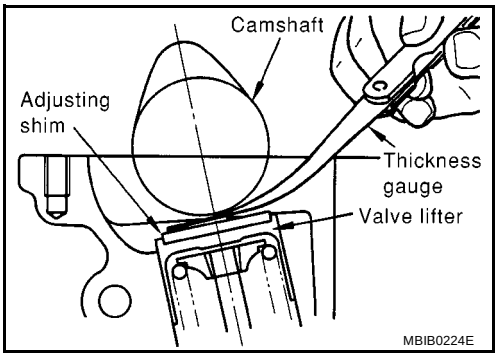

Valve clearance standard:

Hot	**Intake**	**: 0.304 - 0.416 mm (0.012 - 0.016 in)**
	Exhaust	**: 0.348 - 0.472 mm (0.014 - 0.019 in)**
Cold*	**Intake**	**: 0.25 - 0.33 mm (0.010 - 0.013 in)**
	Exhaust	**: 0.32 - 0.40 mm (0.013 - 0.016 in)**

***: Approximately 20°C (68°F) (Reference data)**

If an adjustment is done with cold engine, confirm reference values with hot engine are met.

Limit values with hot engine (reference)	**Intake**	**: 0.21 - 0.47 mm (0.008 - 0.019 in)**
	Exhaust	**: 0.30 - 0.56 mm (0.012 - 0.022 in)**

7. Turn crankshaft pulley a full turn to position No. 4 cylinder at TDC of its compression stroke.
8. Referring to figure, measure valve clearance of parts with × in table below.

Cylinder	No.1		No.2		No.3		No.4	
Valve	INT	EXH	INT	EXH	INT	EXH	INT	EXH
No. 4 cylinder at TDC of its compression stroke				×	×		×	×

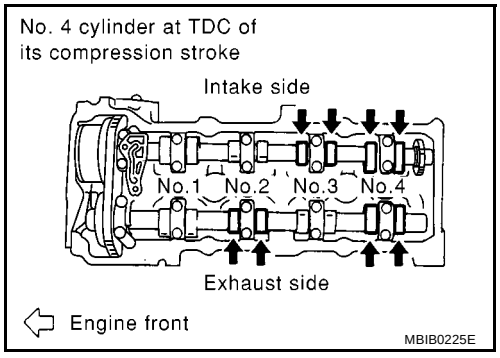

9. If outside the standard, adjust applicable valves as shown below.

ADJUSTMENT (SHIMLESS TYPE)

- Perform adjustment depending on selected head thickness of valve lifter.
- The specified valve lifter thickness is the dimension at normal temperatures. Ignore dimensional differences caused by temperature. Use the specifications for hot engine condition to adjust.

1. Remove camshaft. Refer to EM-35, "Removal and Installation" .
2. Remove the valve lifters at the locations that are outside the standard.
3. Measure the center thickness of the removed valve lifters with a micrometer.

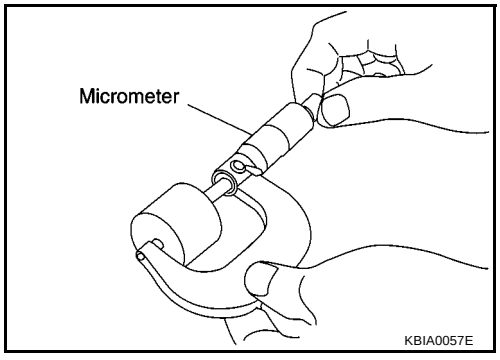

4. Use the equation below to calculate valve lifter thickness for replacement.

- Valve lifter thickness calculation:
  Thickness of replacement valve lifter = t1+ (C1 - C2)
  t1 = Thickness of removed valve lifter
  C1 = Measured valve clearance
  C2=Standard valve clearance:

Intake	**: 0.36 mm (0.014 in)**
Exhaust	**: 0.37 mm (0.015 in)**

- Thickness of a new valve lifter can be identified by stamp marks on the reverse side (inside the cylinder).
  Stamp mark 696 indicates 6.96 mm (0.2740 in) in thickness.

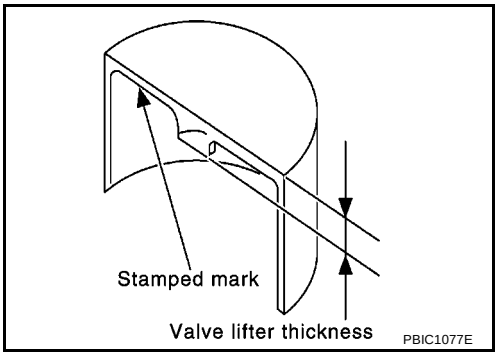

Available thickness of valve lifter: 26 sizes with range 6.96 to 7.46 mm (0.2740 to 0.2937 in) in steps of 0.02 mm (0.0008 in) (when manufactured at factory).

5. Install the selected valve lifter.
6. Install camshaft.
7. Manually turn crankshaft pulley a few turns.
8. Check that valve clearances for cold engine are within specifications by referring to the specified values.
9. After completing the repair, check valve clearances again with the specifications for warmed engine. Make sure the values are within specifications.

Valve clearance:

Unit: mm (in)

	Cold* (reference data)	Hot
Intake	0.24 - 0.32 (0.009 - 0.013)	0.32 - 0.40 (0.013 - 0.016)
Exhaust	0.26 - 0.34 (0.010 - 0.013)	0.33 - 0.41 (0.013 - 0.016)

*: Approximately 20°C (68°F)

ADJUSTMENT (SHIM TYPE)

- Remove adjusting shim for valves with incorrect valve clearance by following the procedure below:

1. Using a rag, completely wipe off engine oil from surroundings of adjusting shim.
2. When removing adjusting shim from a cam, turn crankshaft clockwise (viewed from front) to make cam nose face straight up.
3. Turn valve lifter and adjusting shim to removal direction.
   - Using a slotted screwdriver with extra-thin tip, turn valve lifter cutout in direction shown by the arrow.

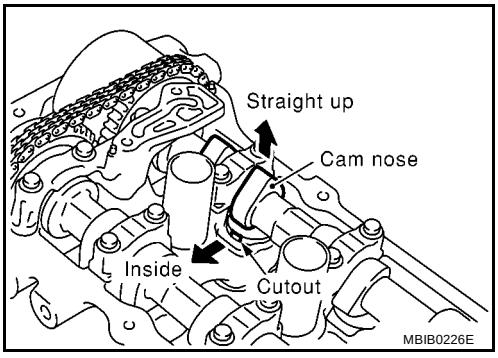

4. Using camshaft pliers (special service tool), pinch camshaft. Turn tool up in direction shown by the arrow with camshaft being a fulcrum. This will push down adjusting shim to allow valve spring to be compressed.

   CAUTION:
   - **Be careful not to damage camshaft and cylinder head.**
   - **Be careful not to damage surroundings of valve lifter.**

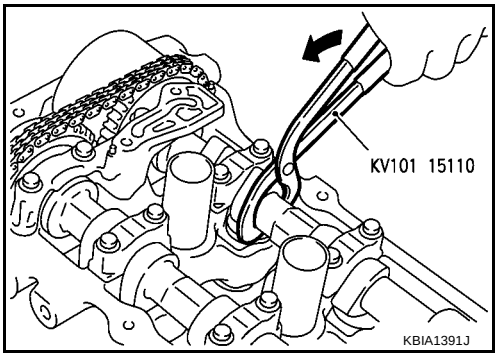

5. With valve spring compressed, securely place tip of lifter stopper (special service tool) onto surroundings of valve spring. Then remove camshaft pliers (special service tool).

   CAUTION:
   If camshaft pliers are suddenly turned back, lifter stopper may contact and damage camshaft journals. Turn back camshaft pliers carefully to remove.

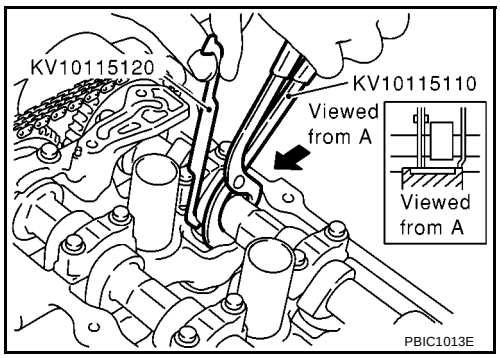

6. Keep adjusting shim slightly up from valve lifter.
   - Insert a slotted screwdriver with extra-thin tip into cutout on valve lifter for this purpose.
7. Using a magnetic handle, remove adjusting shim.

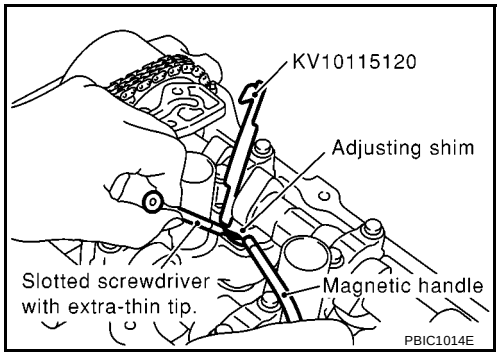

8. Using a micrometer, measure thickness (t1) of removed adjusting shim at camshaft contact face (around center).

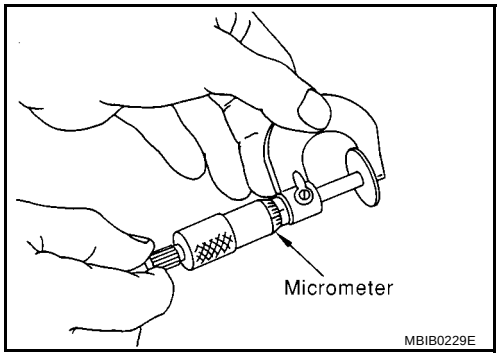

9. Use following formula to select proper replacement adjusting shim.
   - Formula to calculate adjusting shim thickness (unit: mm)
     Thickness of replacement valve lifter = t1+ (C1 - C2)
     t1 = Thickness of removed valve lifter
     C1 = Measured valve clearance
     C2=Standard valve clearance:

   Hot engine:

Intake	**: 0.37 mm (0.015 in)**
Exhaust	**: 0.40 mm (0.016 in)**

   Reference values with cold engine:

Intake	**: 0.30 mm (0.012 in)**
Exhaust	**: 0.35 mm (0.014 in)**

- Thickness of new adjusting shim is indicated with stamped mark on its back.

Stamped mark	Thickness of shim
200	2.00 mm (0.0787 in)
202	2.02 mm (0.0795 in)
:	:
:	:
298	2.98 mm (0.1173 in)

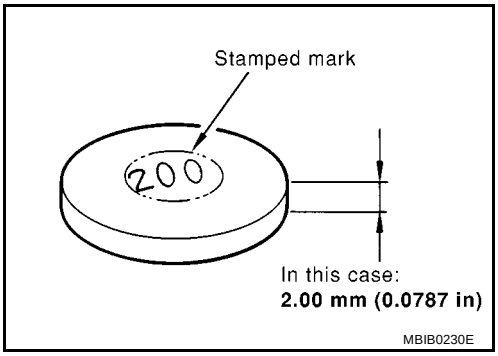

Setting of adjusting shim thickness (at factory)

: Thickness 2.00 to 2.98 mm (0.0787 - 0.1173 in) [spacing of 0.02 mm (0.0008 in)] 50 types

10. Install selected adjusting shim to valve lifter.

    CAUTION:
    Install shim with its stamp mark facing the valve lifter.
11. Using camshaft pliers (special service tool), compress valve spring to remove lifter stopper (special service tool).
12. Turn crankshaft a couple of times by hand.
13. Check that valve clearance is within standards.

TIMING CHAIN

PFP:13028

Removal and Installation

EBS00QEJ

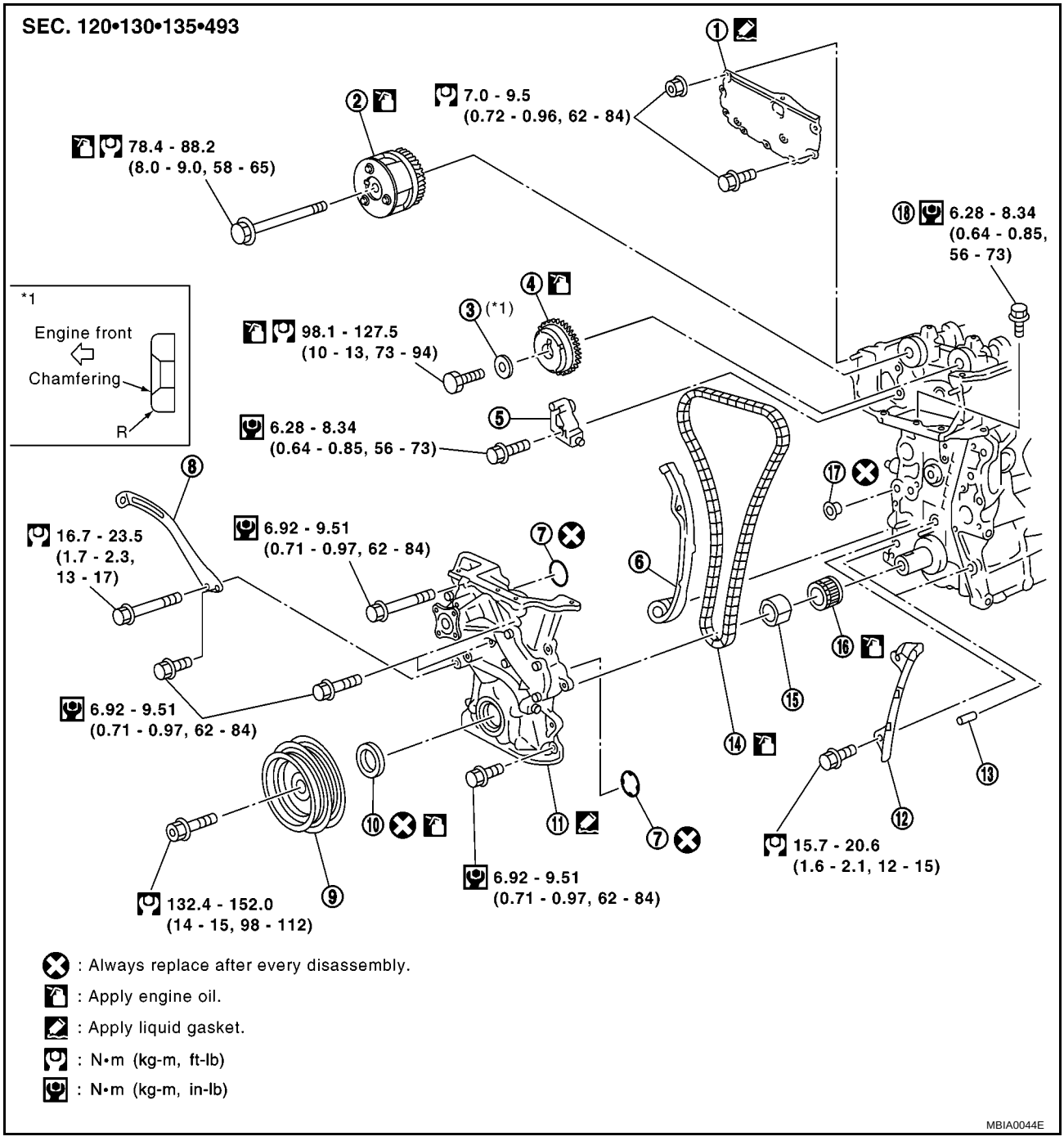

1.	Cylinder head front cover	2.	Camshaft sprocket (INT)	3.	Washer
4.	Camshaft sprocket (EXH)	5.	Chain tensioner	6.	Chain slack guide
7.	O-ring	8.	Power steering pump adjusting bar	9.	Crankshaft pulley
10.	Front oil seal	11.	Front cover	12.	Chain tension guide
13.	Dowel pin	14.	Timing chain	15.	Oil pump drive spacer
16.	Crankshaft sprocket	17.	O-ring (with collar)	18.	Auxiliary bolt of cylinder head

CAUTION:

Apply new engine oil to parts marked in illustration before installation.

REMOVAL

1. Place vehicle on lift.

2. Disconnect battery ground cable.
3. Remove undercover, front RH wheel and RH splash cover.
4. Drain engine coolant from radiator and cylinder block. Refer to LC-18, “Changing Engine Coolant”.
5. Drain engine oil from oil pan.
6. Remove drive belt. Refer to EM-15, "Removal and Installation" .
7. Remove power steering pump from adjusting bar.
8. Remove alternator. SC-24, “Charging System”.
9. Remove ignition coils. Refer to EM-27, "Removal and Installation" .
10. Remove rocker cover. Refer to EM-32, "Removal and Installation" .
11. Remove oil level gauge.
12. Remove exhaust front tube. Refer to FE-11, “Exhaust System”.
13. Remove center member.
14. Remove gusset.
15. Remove rear plate (lower) (A/T models).
16. Remove oil pan and oil strainer. Refer to EM-25, "Removal and Installation" .
17. For safe operation, and to reduce load to mount insulator, install removed center member again.
18. Remove engine front-side (right side of vehicle) engine mount. Refer to EM-70, "Removal and Installation" .

a. Remove any parts that cause difficulties for operation around mount, or perform transfer.
b. Support cylinder block bottom surface with a transmission jack.

CAUTION:
- **When applying jack, use a wooden block to avoid damage to oil pan mounting surface.**
- **While performing following operations, support engine front-side with jack.**

c. Separate engine mounting insulator and bracket.
d. Remove engine mounting bracket.

19. Remove cylinder head front cover.
    - Move harness which was previously fixed on front surface.
20. Remove auxiliary bolts of cylinder head.

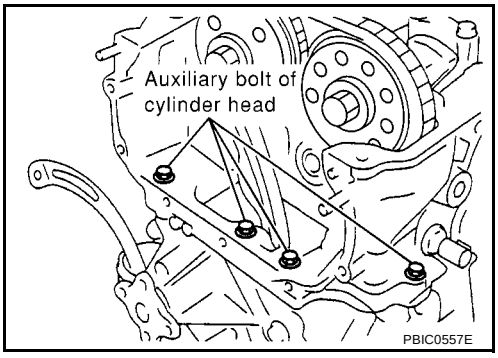

21. Set the No. 1 cylinder to the compression TDC.

a. Turn the crankshaft pulley clockwise, and align the timing indicator of the gear case to the timing mark of the crankshaft pulley.

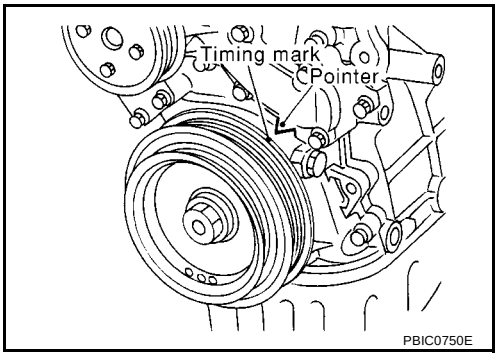

b. Make sure that the camshaft sprocket mating mark is in the position shown in the figure.
   - If the mating mark is not in position, turn the crankshaft pulley once more and position it.

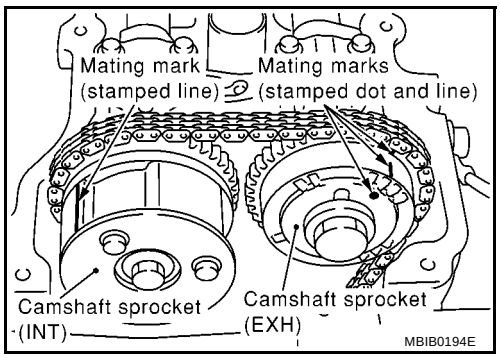

22. Remove crankshaft pulley with the following procedure:

a. Secure crankshaft counter weight with handle of a hammer, and loosen crankshaft pulley bolts.

CAUTION:
Take care to prevent foreign material from entering the engine.

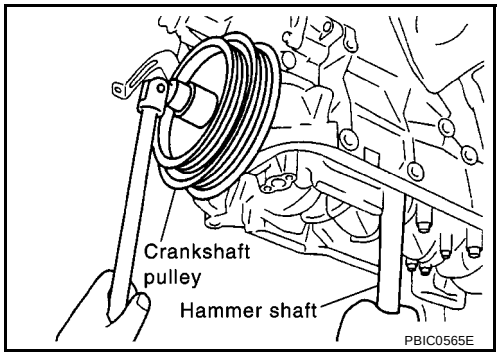

b. Remove crankshaft pulley using crankshaft pulley puller (commercial service tool).

CAUTION:
- **Hook tab onto back of crankshaft pulley only.**
- **Do not remove crankshaft pulley bolt. Fully loosen, and then use it as support point.**

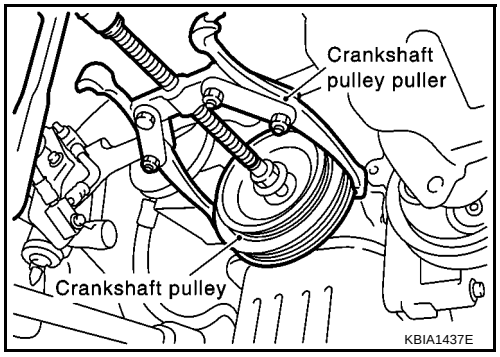

NOTE:
If oil pan is not removed, remove crankshaft pulley as follows.

i. Remove rear plate (lower).

ii. Engage drive plate ring gear with a flat-head screwdriver to fix crankshaft in position, and loosen crankshaft pulley bolt.

iii. Remove crankshaft pulley using crankshaft pulley puller (commercial service tool).

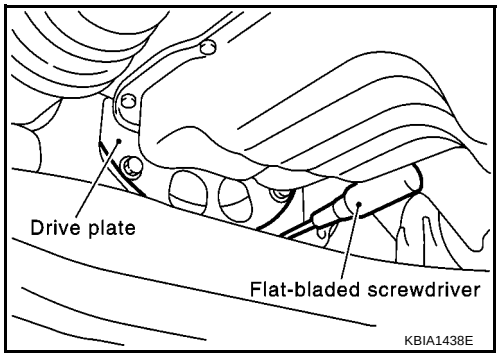

23. Remove water pump pulley and idler pulley bracket assembly.

24. Remove front cover with the following procedure:

a. To increase freedom of front cover posture during removal/installation, pull oil pump drive spacer out through front oil seal.
   - Pull it straight out using long-nose priers or two flat-bladed screwdrivers.

   CAUTION:
   Be careful not to damage side of oil pump drive spacer and front oil seal lip.

b. Remove power steering pump adjusting bar.

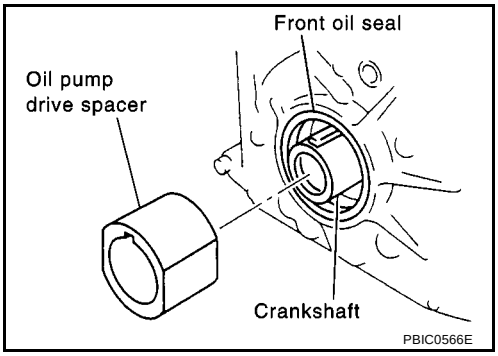

c. Remove front cover carefully.
   - Remove mounting bolts A - E shown in figure.

   NOTE:
   Bolts C and E have been removed in step b.

   CAUTION:
   - **When removing, be careful not to damage or bend front end of cylinder head gasket. Also after peeling off contact face between front cover and gasket, their surfaces shall be smooth.**
   - **If cylinder head gasket is damaged, replace it with new one.**

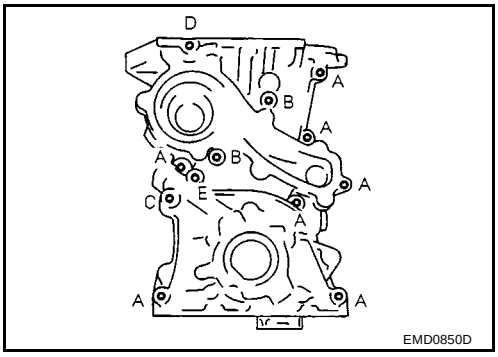

d. Remove O-rings from front cover and cylinder block.

25. Pull two dowel pins for front cover out of cylinder block.
   - Heat them with industrial dryer sufficiently, then pull them out using locking pliers.

   NOTE:
   This operation is performed as preparation operation for front cover installation. This operation can be performed after removal of timing chain.

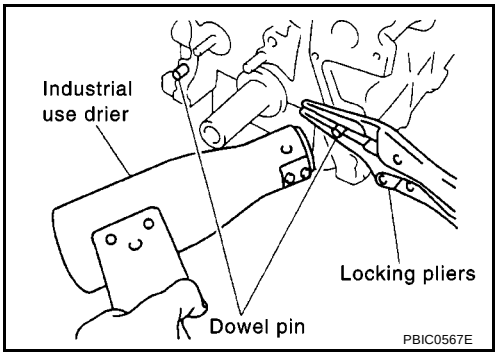

26. If front oil seal is need to be replaced, remove it from front cover.
   - Insert a flat-bladed screwdriver in notch on oil seal mounting point, and lift oil seal to remove.

   NOTE:
   Remove timing chain and its related parts with the following procedure:

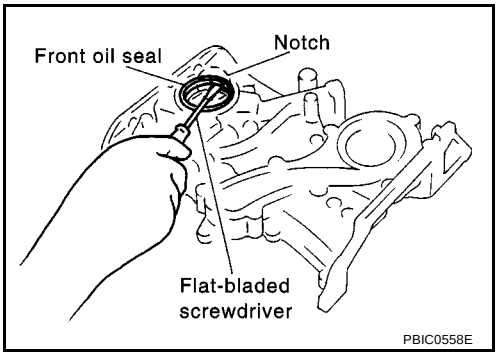

27. Secure intake camshaft sprocket in most advanced position. Refer to EM-35, "REMOVAL" .

   NOTE:
   Removal of timing chain and related parts is described in following steps.

28. Remove chain tensioner. Refer to EM-35, "REMOVAL" .

29. Remove camshaft sprocket. Refer to EM-35, "REMOVAL" .

   CAUTION:
   After this step is completed, do not rotate crankshaft and camshaft separately in order to prevent interference between valve and piston.

30. Remove timing chain, timing chain slack guide and tension guide.
31. Remove crankshaft sprocket.

INSPECTION AFTER REMOVAL

Timing Chain

Check timing chain for cracks or serious wear. If a malfunction is detected, replace it.

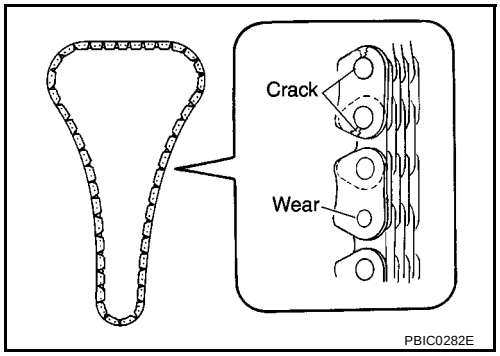

INSTALLATION

CAUTION:

- **Use a scraper to completely remove all liquid gasket adhering to mounting surface. De-grease and clean with white gasoline.**
- **After installation, wipe off any protruding liquid gasket.**

1. Install timing chain and its related parts with the following procedure:
   - For aligning positions for each sprocket and timing chain, and installed condition of their related parts, refer to figure.
   - Install each sprocket with its mating mark facing engine front side.

a. Install timing chain and crankshaft sprocket.
   - Make sure that crankshaft key points straight up (No.1 cylinder is at TDC).
   - Hook timing chain on front end of camshaft so that it will not fall off.

b. Install timing chain slack guide and tension guide.

c. Install camshaft sprocket. Refer to EM-38, "INSTALLATION" .

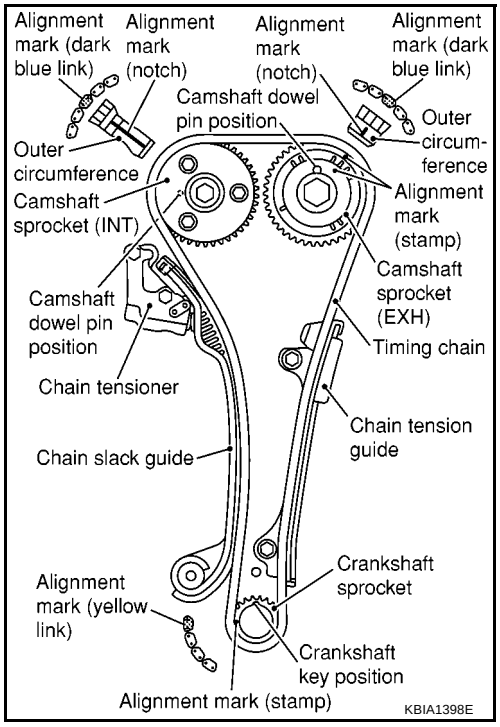

d. Install chain tensioner. Refer to EM-38, "INSTALLATION" .

e. Make sure again that mating marks are properly aligned.

f. Temporarily install oil pump drive spacer, crankshaft pulley, and crankshaft pulley mounting bolt so that crankshaft can be rotated.

g. Install oil pump drive spacer, crankshaft pulley, and crankshaft pulley mounting bolts temporarily. Rotate crankshaft clockwise several times to make sure it rotates normally. Refer to EM-38, "INSTALLATION" .

h. Rotate crankshaft clockwise several times, and check that there is no unusual condition.

i. Remove parts temporarily installed in step f.

2. Install front oil seal to front cover.
   - Install it so that identification letters on oil seal will face toward front side of the engine.
   - Using an oil seal drift (commercial service tool), press oil seal in until it is flush with end surface of mounting position.
   - Make sure that oil seal outer circumference is free from damage and burr.

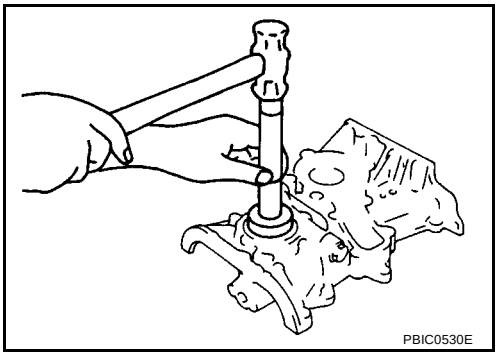

3. Install front cover with the following procedure:

a. Install O-ring to cylinder block.

b. Using a flat-bladed screwdriver, apply a continuous bead of liquid gasket to contact surface between cylinder head gasket lower surface and cylinder block (2 locations shown in figure). Use Genuine Liquid Gasket or equivalent.

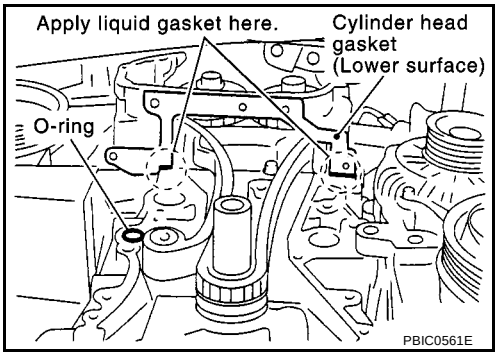

c. Apply a continuous bead of liquid gasket to back surface of front cover (location shown in figure).

CAUTION:
- **Do not apply liquid gasket to groove A shown in figure.**
- **Especially for locations indicated by * mark in figure, strictly observe application range of liquid gasket.**

d. Apply liquid gasket to top surface of front cover lightly and evenly.
Use Genuine Liquid Gasket or equivalent.

e. Install O-ring to back surface of front cover.

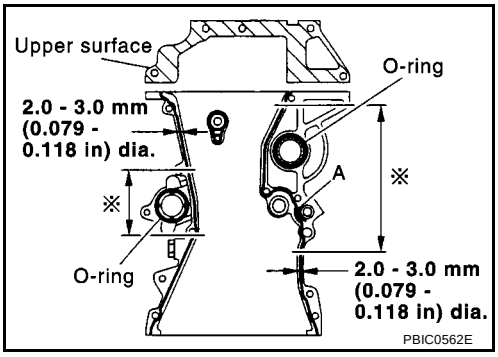

f. With socket of oil pump inner rotor placed on crankshaft top surface (clearance between front cover top surface and cylinder head gasket lower surface is secured), move front cover close to cylinder block. (Right side in figure)

g. Lift front cover at an angle and install it to mounting position so that front cover will come in contact with both cylinder head gasket lower surface and cylinder block front surface at the same time. (Right side in figure)

CAUTION:
- **During work, be sure not to damage cylinder head gasket.**
- **When installing, avoid discontinuous bead of liquid gasket caused by allowing it to adhere to an unnecessary area.**

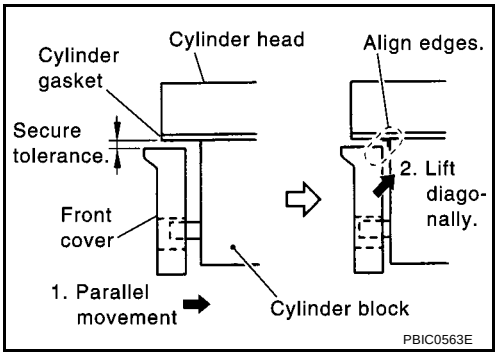

h. Install front cover with mounting bolts temporarily so that front cover will not move.

i. Press fit dowel pin into cylinder block through front cover.

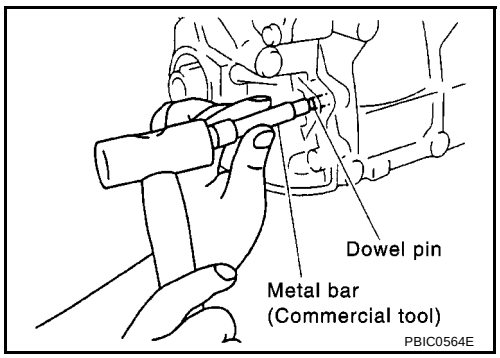

j. Tighten front cover mounting bolts temporarily.
   - A [M6 x 20 mm (0.79 in)], B [M6 x 40 mm (1.57 in)], C [M8 x 70 mm (2.76 in)], D [M6 x 73 mm (2.87 in)]
   - Bolt C also secures power steering pump adjusting bar.
   - Bolt E [M6 x 12 mm (0.47 in)] is for installing power steering pump adjusting bar.

k. Tighten cylinder head auxiliary bolts (M6) temporarily.

l. Tighten front cover mounting bolts and cylinder head auxiliary bolts to specified torque.

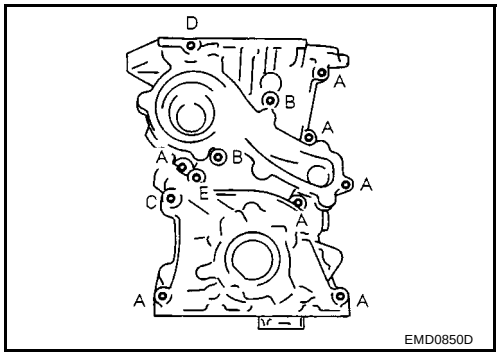

4. Install oil pump drive spacer.
   - When installing, align with flat of oil pump inner rotor.
   - If they are not aligned, rotate inner rotor with a flat-bladed screwdriver to align them.

   CAUTION:
   Be careful not to damage oil seal lips.

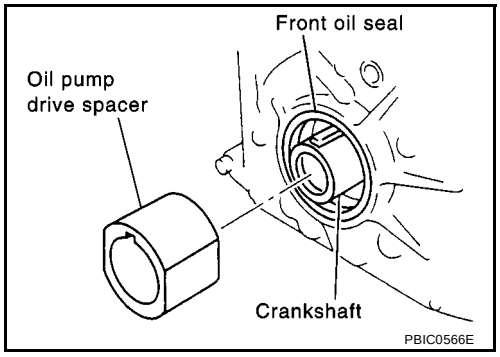

5. Install water pump pulley and idler pulley bracket assembly.
6. Install crankshaft pulley.
   - When installing it, make sure that front oil seal lip is not inverted and garter spring is in position.
   - For direction of mounting bolt washer, refer to “Component Parts Location”.
   - With same procedure as “removal”, secure crankshaft, and tighten mounting bolts.
7. Install cylinder head front cover.
   - Apply liquid gasket to cylinder head front cover.
   - Use Genuine Liquid Gasket or equivalent.
8. Install engine front mounting bracket.
9. Install remaining parts in the reverse order of removal.

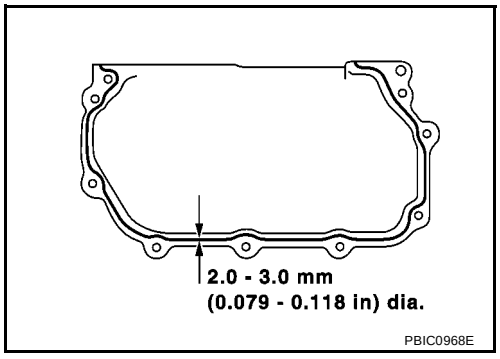

INSPECTION AFTER INSTALLATION

- In order to allow liquid gasket to be cured, perform inspection at least 30 minutes after the last step in which parts sealed with liquid gasket are installed.
- With engine warmed up, check each part for engine oil leakage.

OIL SEAL

PFP:00100

Removal and Installation of Valve Oil Seal

EBS00QEK

REMOVAL

1. Remove camshaft. Refer to EM-35, "CAMSHAFT" .
2. Remove adjusting shim (if so equipped) and valve lifters. Refer to EM-35, "CAMSHAFT" .
3. To prevent valve from falling inside cylinder, turn crankshaft until cylinder with oil seal to be removed is at top dead center.

   CAUTION:
   When rotating crankshaft, be careful that timing chain is not caught by front cover.

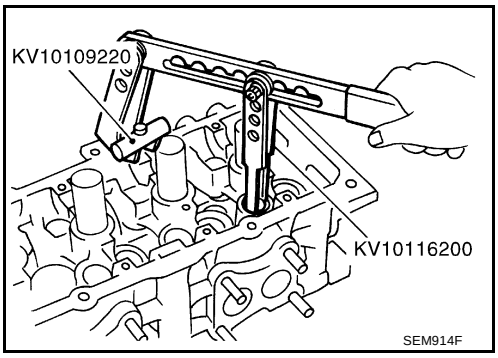

4. Using valve spring compressor (special service tool), remove valve collect. Then remove valve spring and valve spring retainer.
5. Remove valve oil seal using valve oil seal puller (special service tool).

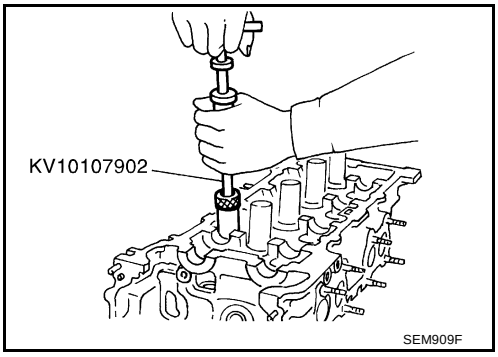

INSTALLATION

1. Apply engine oil on new valve oil seal joint and seal lip.
2. Using valve oil seal drift (special service tool), press fit valve oil seal to height shown in figure.
3. Perform steps in the reverse order of removal for the following operations.

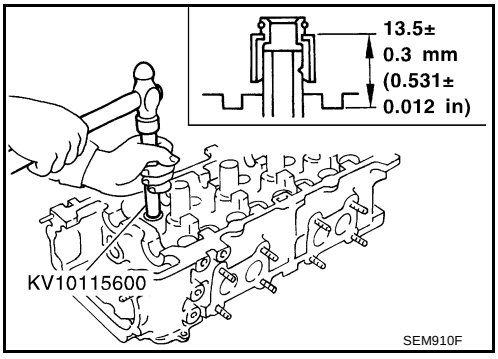

Removal and Installation of Front Oil Seal

EBS00QEL

REMOVAL

1. Remove the following parts:
   - RH undercover (with splash cover)
   - Drive belt; Refer to EM-15, "Removal and Installation" .
   - Crankshaft pulley; Refer to EM-50, "TIMING CHAIN" .
2. Using flat-head screwdriver, remove front oil seal.

   CAUTION:
   Be careful not to damage front timing chain cover and crankshaft.

INSTALLATION

1. Apply engine oil on new front oil seal.
2. Using a suitable drift, press fit until the height of front oil seal is level with the mounting surface.
   - Suitable drift: outer diameter 50 mm (1.97 in), inner diameter 44 mm (1.73 in).

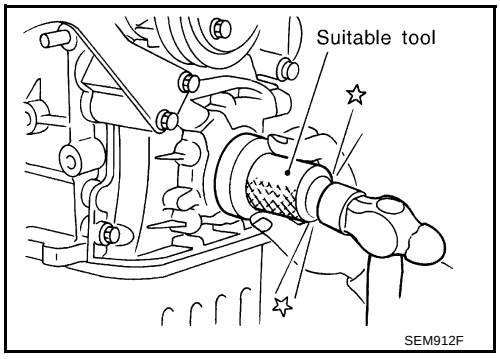

   CAUTION:
   - **Be careful not to damage front cover and crankshaft.**
   - **Press oil seal straight so that it is not curling up or inclined.**
3. Perform steps in the reverse order of removal for the following operations.

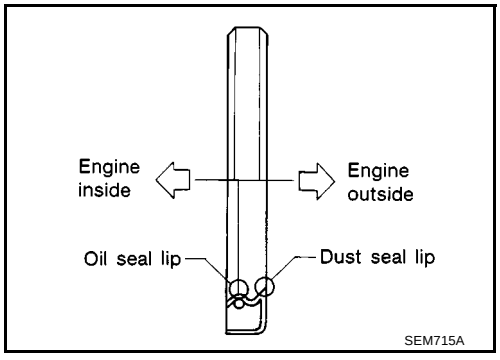

Removal and Installation of Rear Oil Seal

EBS00QEM

REMOVAL

1. Remove transaxle assembly. Refer to MT-19 (5MT) (RS5F50A), MT-21 (5MT) (RS5F70A) and AT-414 (AUTOMATIC TRANSAXLE).
2. Remove flywheel or drive plate. Refer to EM-74, "CYLINDER BLOCK" .
3. Using flat-head screwdriver, remove rear oil seal.

   CAUTION:
   Be careful not to damage mounting surface.

INSTALLATION

1. Using a suitable drift, press rear oil seal to rear oil seal retainer.
   - Suitable drift: outer diameter 102 mm (4.02 in), inner diameter 90 mm (3.54 in).

   CAUTION:
   - **Do not touch grease applied on oil seal lip**
   - **Be careful not to damage rear oil seal retainer and crankshaft.**
   - **Press in straight to avoid causing any burrs or tilting of oil seal.**

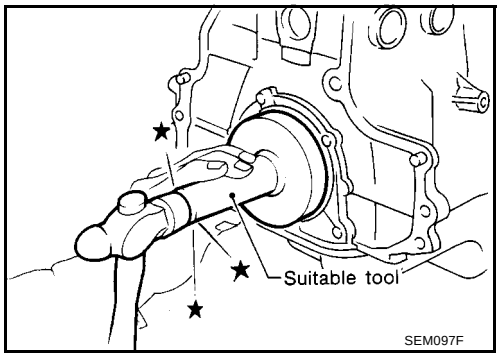

- **Press rear oil seal into rear oil seal retainer so that is does not project from the end.**

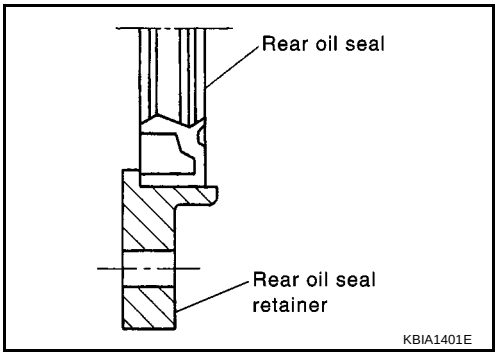

2. Perform steps in the reverse order of removal for the following operations.

CYLINDER HEAD

PFP:11041

On-Vehicle Service

EBS00QEN

CHECKING COMPRESSION PRESSURE

1. Warm up engine thoroughly. Then, stop it.
2. Release fuel pressure. Refer to EC-52, "FUEL PRESSURE RELEASE" (WITH EURO-OBD), EC-579, "FUEL PRESSURE RELEASE" (WITHOUT EURO-OBD).
3. Remove ignition coil and spark plug from each cylinder.
   Refer to IGNITION COIL EM-27, "Removal and Installation" and SPARK PLUG EM-28, "Removal and Installation" .
4. Connect engine tachometer (not required in use of CONSULT-II).
5. Disconnect fuel injector harness connector so that no fuel is injected.
6. Install compression tester with adapter onto spark plug hole.

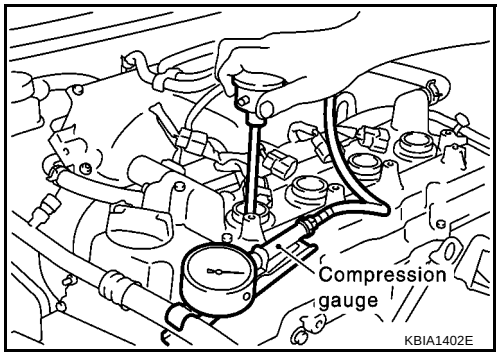

- Use compression gauge whose picking up end inserted to spark plug hole is smaller than 20 mm (0.79 in) in diameter. Otherwise, it may be caught by cylinder head during removal.

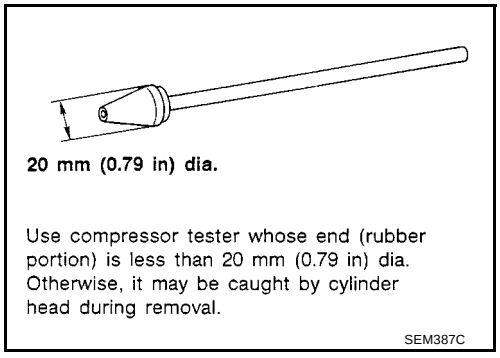

7. With accelerator pedal fully depressed, turn ignition switch to “START” for cranking. When the gauge pointer stabilizes, read the compression pressure and engine rpm. Perform these steps to check each cylinder.

Compression pressure [kPa (bar, kg/cm^2 , psi)/rpm]

Standard	1,324 (13.24, 13.5, 192)
Limit	1,128 (11.28, 11.5, 164)
Difference limit among cylinders	98 (0.98, 1.0, 14)

CAUTION:
Always use a fully changed battery to obtain specified engine speed.

- If the engine speed is out of specified range, check battery liquid for proper gravity. Check engine speed again with normal battery gravity.
- If compression pressure is below minimum value, check valve clearances and parts associated with combustion chamber (Valve, valve seat, piston, piston ring, cylinder bore, cylinder head, cylinder head gasket). After the checking, measure compression pressure again.
- If some cylinders have low compression pressure, pour small amount of engine oil into the spark plug hole of the cylinder to re-check it for compression.
  - If the added engine oil improves the compression, the piston rings may be worn out or damaged. Check the piston rings and replace if necessary.
  - If the compression pressure remains at low level despite the addition of engine oil, the valves may be malfunctioning. Check the valves for damage. Replace the valve or valve seat accordingly.
- If two adjacent cylinders have respectively low compression pressure and their compression remains low even after the addition of engine oil, the gaskets are leaking. In such a case, replace the cylinder head gaskets.

8. Install spark plug, ignition coil and harness connectors.

Removal and Installation

EBS00QEO

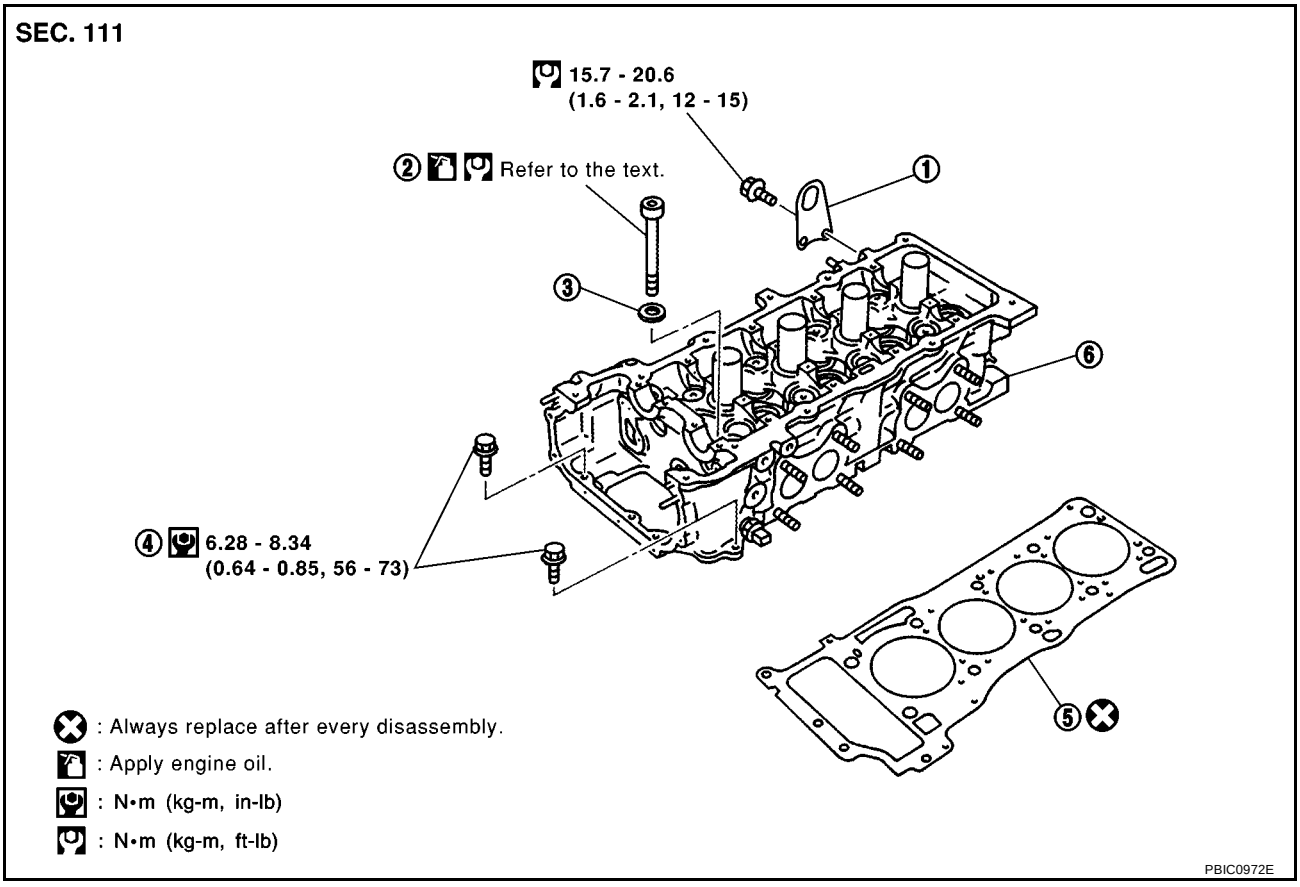

1. Rear engine slinger	2. Cylinder head bolt	3. Washer
4. Auxiliary bolt of cylinder head	5. Cylinder head gasket	6. Cylinder head assembly

REMOVAL

1. Release fuel pressure. Refer to EC-52, "FUEL PRESSURE RELEASE" (WITH EURO-OBD), EC-579, "FUEL PRESSURE RELEASE" (WITHOUT EURO-OBD).
2. Remove undercover.
3. Drain engine coolant. Refer to LC-18, “Changing Engine Coolant”.
4. Remove the following components and related parts:
   - Intake manifold and intake manifold collector. Refer to EM-18, "Removal and Installation" .
   - Exhaust manifold and catalytic converter. Refer to EM-21, "Removal and Installation" .
   - Ignition coil. Refer to EM-27, "Removal and Installation" .
   - Rocker cover. Refer to EM-32, "Removal and Installation" .
   - Camshaft. Refer to EM-35, "Removal and Installation" .
   - Alternator bracket. Refer to SC-24, “Charging System”.
5. Remove cylinder head loosening bolts in reverse order shown in the figure.
6. Remove cylinder head gasket.

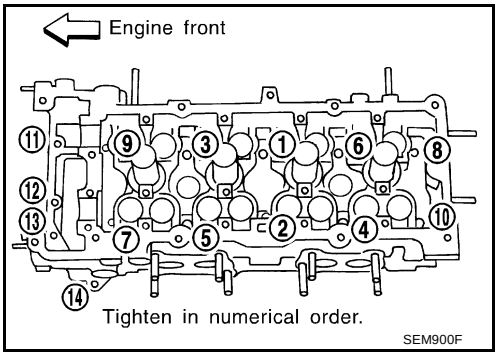

INSTALLATION

1. Apply liquid gasket to positions shown in figure, then install cylinder head gasket.
   - Use Genuine Liquid Gasket or equivalent.

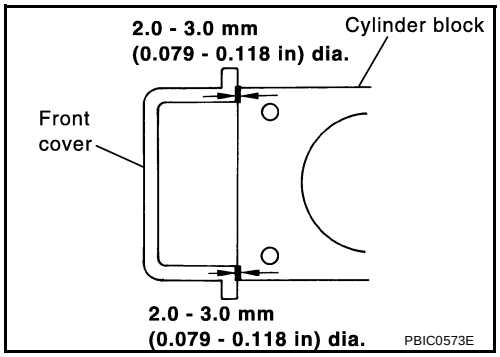

2. Install cylinder head assembly, tighten bolts (1) to (10) in numerical order shown in figure with the following procedure:

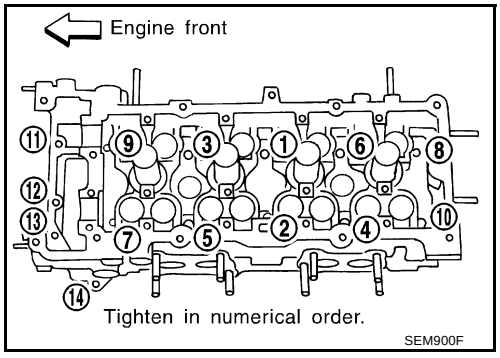

CAUTION:
- **Be sure to install washers between bolts and cylinder head.**
- **In step "d", loosen bolts in the reverse order of that indicated in figure.**

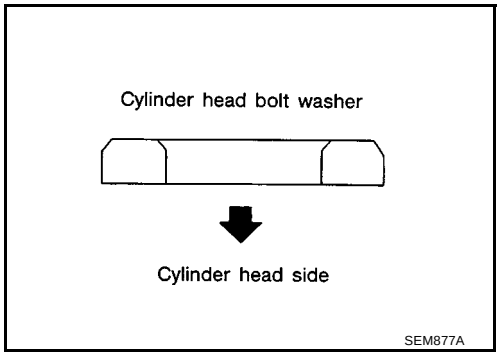

a. Apply new engine oil to threads and seating surface of mounting bolts.
b. Tighten all bolts to 29.4 N·m (3.0 kg-m, 22 ft-lb).
c. Tighten all bolts to 58.8 N·m (6.0 kg-m, 43 ft-lb).
d. Completely loosen to 0 N·m (0 kg-m, 0 ft-lb).
e. Tighten all bolts to 27.4 - 31.4 N·m (2.8 to 3.2 kg-m, 21 to 23 ft-lb).
f. Turn all bolts 50 to 55 degrees (target: 50 degrees) clockwise.

CAUTION:
Check and confirm the tightening angle by using angle wrench (special service tool). Avoid judgment by visual inspection without the tool.

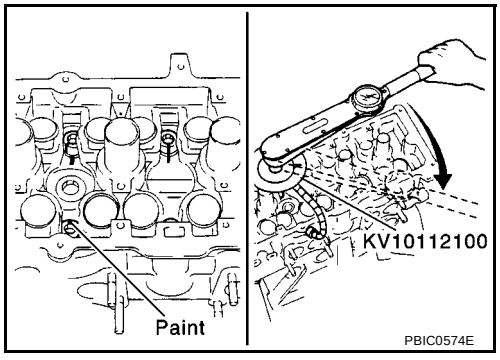

3. Tighten cylinder auxiliary bolts (11) to (14) in numerical order shown in figure.
   - Pay attention to shank length under bolt head. [11: 20 mm (0.79 in), 12 - 14: 25 mm (0.98 in)]

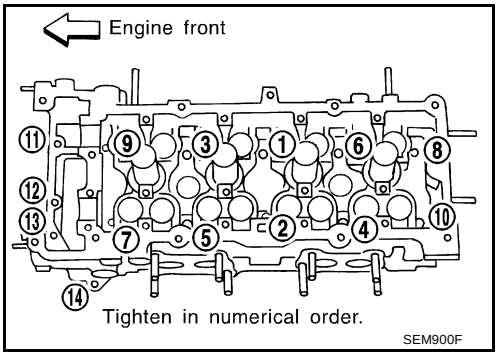

Disassembly and Assembly

EBS00QEP

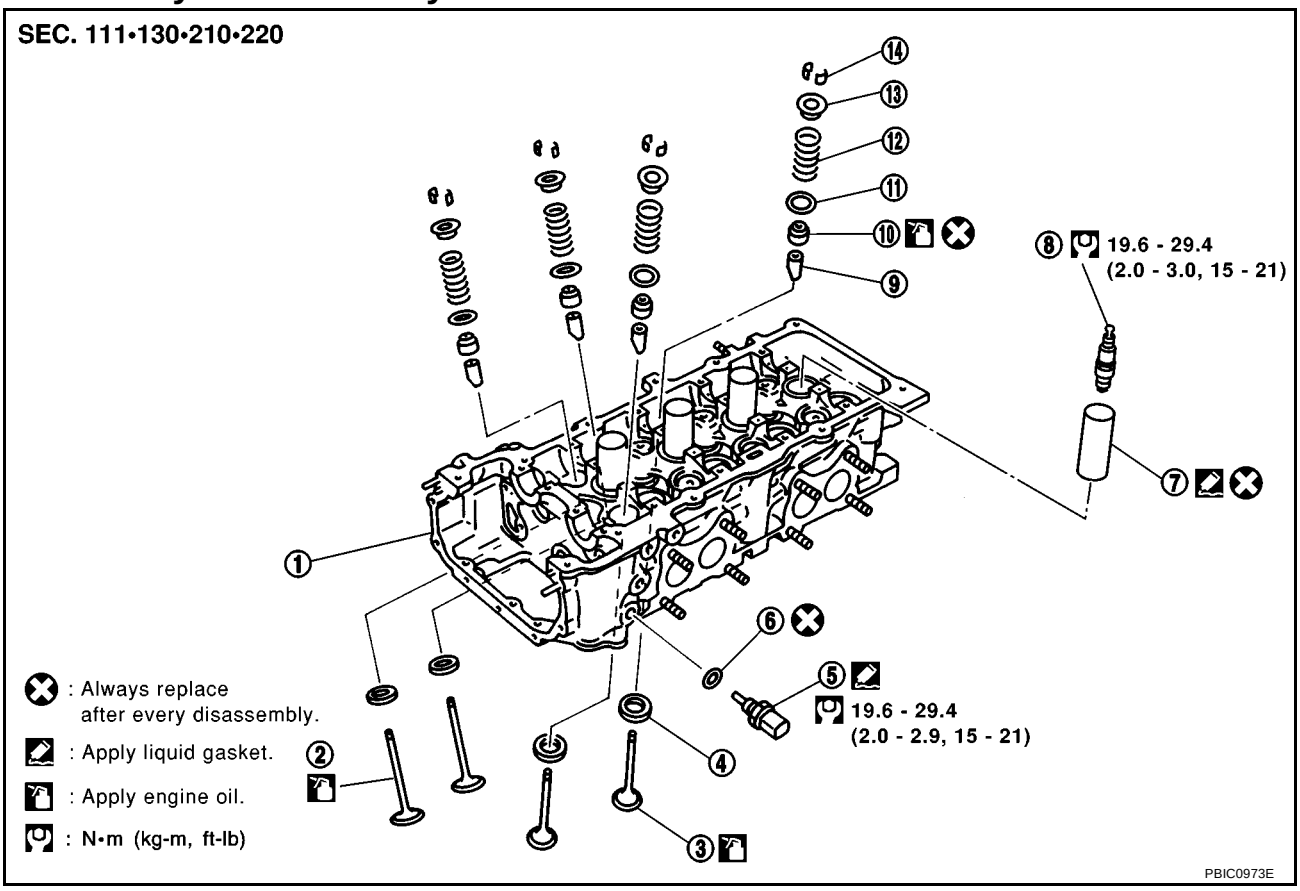

1. Cylinder head	2. Valve (INT)	3. Valve (EXH)
4. Valve seat	5. Engine coolant temperature sensor	6. Copper washer
7. Spark plug tube	8. Spark plug	

CAUTION:

- **When installing camshafts, chain tensioners, oil seals or other sliding parts, lubricate contacting surface with new engine oil.**
- **Apply new engine oil to threads and seat surface when installing cylinder head, camshaft sprocket, crankshaft pulley and camshaft bracket.**
- **Attach tags to valve lifters so as not to mix them up.**

DISASSEMBLY

1. Remove adjusting shim (if so equipped) and valve lifter.
   - Confirm installation point.

2. Remove valve collet.
   - Compress valve spring with valve spring compressor (special service tool). Remove valve collet with magnet driver.
3. Remove valve spring retainer and valve spring.
4. Push valve stem to combustion chamber side, and remove valve.
   - Inspect valve guide clearance before removal. Refer to EM-66, "VALVE GUIDE CLEARANCE" .
   - Confirm installation point.

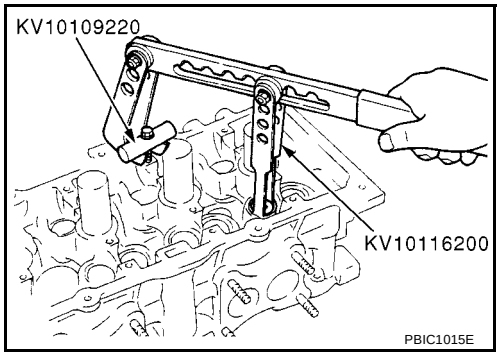

5. Remove valve oil seal with valve oil seal puller (special service tool).
6. Remove valve spring seat.
7. When valve seat must be replaced, refer to EM-68, "VALVE SEAT REPLACEMENT" .
8. When valve guide must be replaced, refer to EM-66, "VALVE GUIDE REPLACEMENT" .
9. Remove spark plug with spark plug wrench (commercial service tool).
10. Remove engine coolant temperature sensor.

    CAUTION:
    Do not shock it.

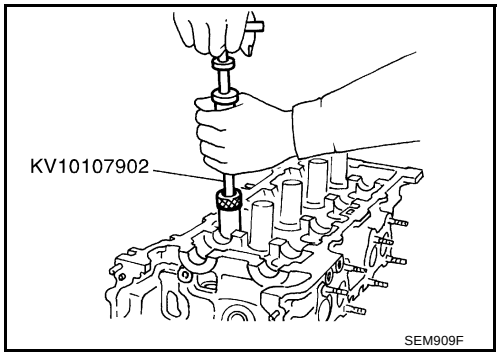

11. Remove spark plug tube, as necessary.
    - Using a pair of pliers, pull spark plug tube out of cylinder head.

    CAUTION:
    - **Take care not to damage cylinder head.**
    - **Once removed, a spark plug tube will be deformed and cannot be reused. Do not remove it unless absolutely necessary.**

ASSEMBLY

1. Install valve guide. Refer to EM-66, "VALVE GUIDE REPLACEMENT" .
2. Install valve seat. Refer to EM-68, "VALVE SEAT REPLACEMENT" .
3. Install valve oil seal.
   - Install with valve oil seal drift (special service tool) to match dimension in illustration.
4. Install valve spring seat.
5. Install valve.
   - Install larger diameter to intake side.

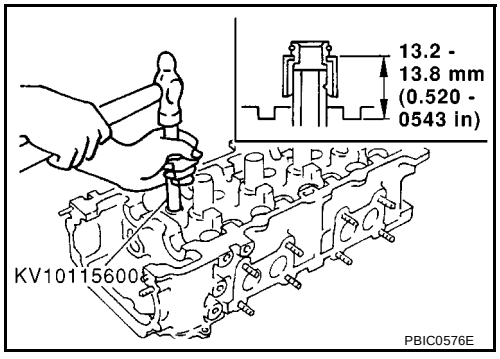

6. Install valve spring.
7. Install valve spring retainer.

8. Install valve collet.
   - Compress valve spring with valve spring compressor (special service tool). Install valve collet with magnet hand.
   - Tap stem edge lightly with plastic hammer after installation to check its installed condition.
9. Install adjusting shim (if so equipped) and valve lifter.
10. Install engine coolant temperature sensor.
    - Apply Genuine Liquid Gasket or equivalent to the thread.

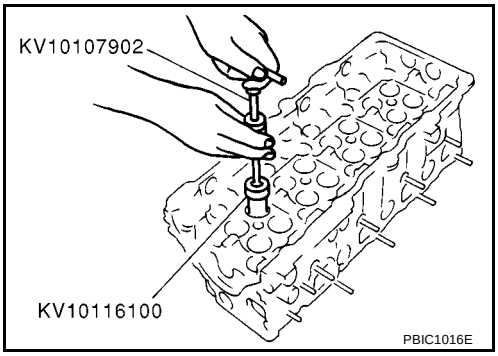

11. Install spark plug tube.
    - Press-fit spark plug tube following procedure below.

a. Remove old liquid gasket adhering to cylinder-head mounting hole.

b. Apply liquid gasket to area within approximately 15 mm (0.59 in) from edge of spark plug tube press-fit side.
   - Use Genuine Liquid Gasket or equivalent.

c. Using a drift, press-fit spark plug tube so that its height “H” is as specified in the figure.

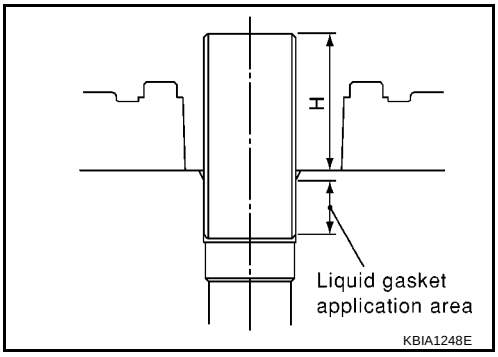

Standard press-fit height “H”:

: 41.0 - 42.0 mm (1.61 - 1.65 in)

CAUTION:
- **When press-fitting, take care not to deform spark plug tube.**
- **After press-fitting, wipe off liquid gasket protruding onto cylinder-head upper face.**

12. Install spark plug with spark plug wrench (commercial service tool).

Inspection After Disassembly

EBS00QEQ

CYLINDER HEAD DISTORTION

1. Wipe off oil and remove water scale (like deposit), gasket, sealer, carbon, etc with scraper.

   CAUTION:
   Use utmost care not to allow gasket debris to enter passages for oil or water.

2. At each of several locations on bottom surface of cylinder head, measure distortion in six directions.

   Limit : 0.1 mm (0.004 in)

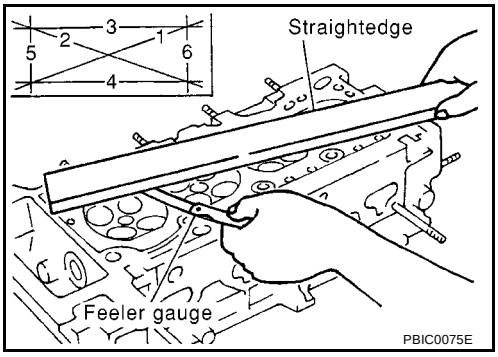

VALVE DIMENSIONS

Check dimensions of each valve. For dimensions, refer to EM-97, "VALVE" .

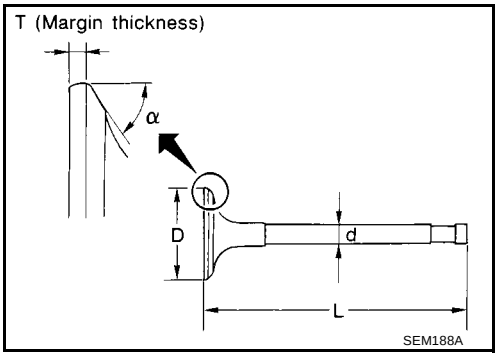

VALVE GUIDE CLEARANCE

Perform this inspection before removing valve guide.

1. Make sure that the valve stem diameter is within the specification.
2. Push the valve out by approx. 15 mm (0.59 in) toward the combustion chamber side to measure the valve's run-out volume (in the direction of dial gauge) with dial gauge.
3. The half of the run-out volume accounts for the valve guide clearance.

Standard

Intake : 0.020 - 0.050 mm (0.0008 - 0.0020 in)

Exhaust : 0.040 - 0.070 mm (0.0016 - 0.0028 in)

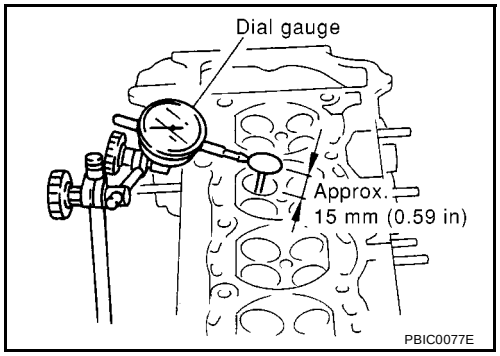

VALVE GUIDE REPLACEMENT

When valve guide is removed, replace with oversized [0.2 mm (0.008 in)] valve guide.

1. To remove valve guide, heat cylinder head to 110 to 130°C (230 to 266°F) by soaking in heated oil.

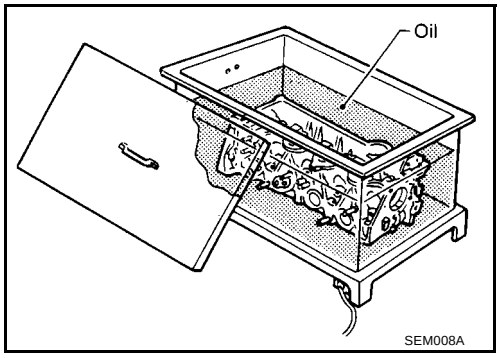

2. Drive out valve guide with a press [under a 20 kN (2 ton, 2.2 US ton, 2.0 Imp ton) pressure] or hammer and suitable tool.

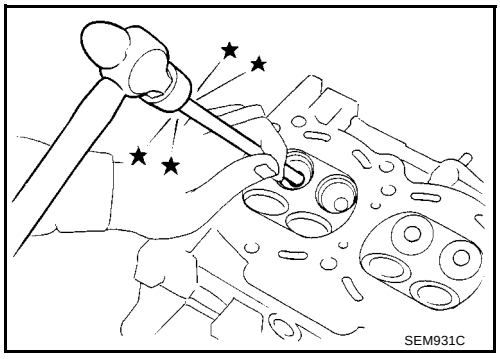

3. Ream cylinder head valve guide hole.

Valve guide hole diameter (for service parts):

Intake and exhaust

: 9.685 - 9.696 mm (0.3813 - 0.3817 in) dia.

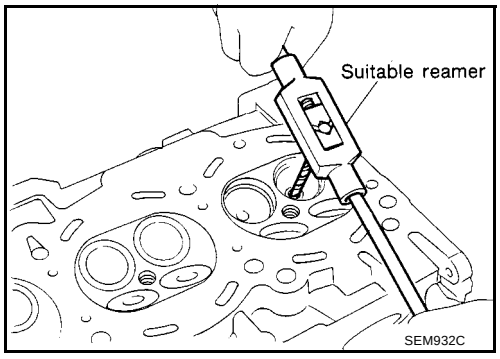

4. Heat cylinder head to 110 to 130°C (230 to 266°F) by soaking in heated oil.

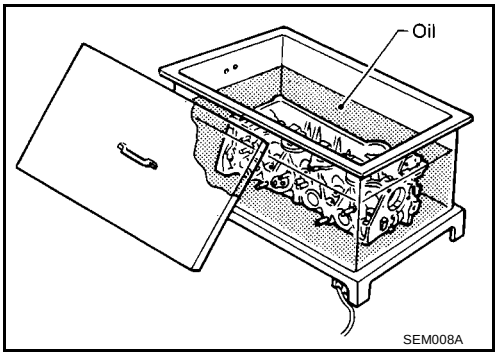

5. Press valve guide from camshaft side to dimensions as in illustration.

CAUTION:
Cylinder head contains heat. When working, wear protective equipment to avoid getting burned.

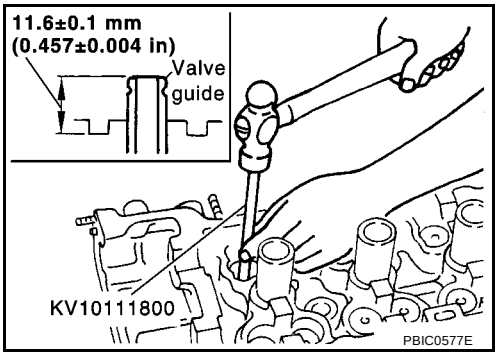

6. Using valve guide reamer, apply reamer finish to valve guide.

Standard

Intake and exhaust

: 5.500 - 5.515 mm (0.2165 - 0.2171 in) dia.

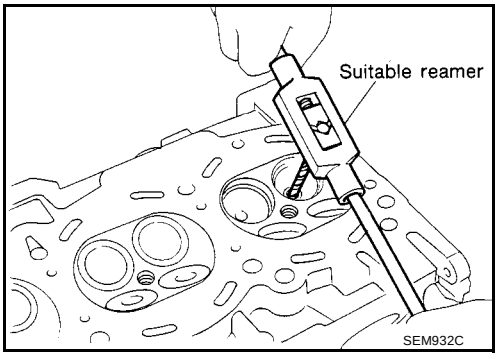

VALVE SEAT CONTACT

- After confirming that the dimensions of valve guides and valves are within specifications, perform this procedure.
- Apply prussian blue (or white lead) onto contacting surface of valve seat to check the condition of the valve contact on the surface.
- Check if the contact area band is continuous all around the circumference.
- If not, grind to adjust valve fitting and check again. If the contacting surface still has N.G conditions even after the re-check, replace valve seat.

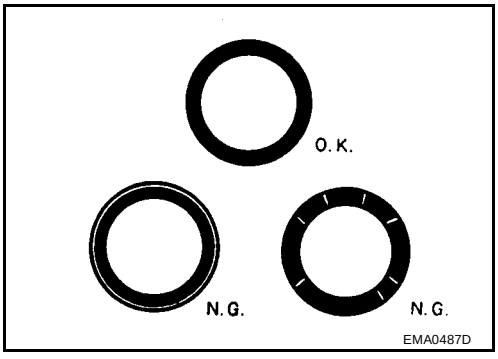

VALVE SEAT REPLACEMENT

When valve seat is removed, replace with oversized [0.5 mm (0.020 in)] valve seat.

1. Bore out old seat until it collapses. Boring should not continue beyond the bottom face of the seat recess in cylinder head. Set the machine depth stop to ensure this.
2. Ream cylinder head recess diameter for service valve seat.

   Oversize [0.5 mm (0.020 in)]:

   Intake: 31.5 mm (1.240 in)

   Exhaust: 26.5 mm (1.043 in)

- Be sure to ream in circles concentric to the valve guide center.
- This will enable valve seat to fit correctly.

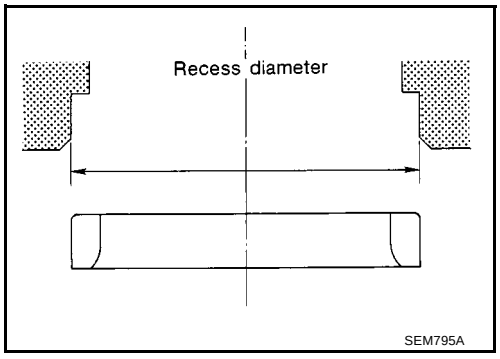

3. Heat cylinder head to 110 to 130°C (230 to 266°F) by soaking in heated oil.

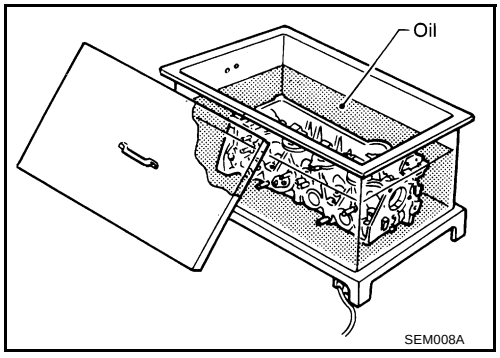

4. Provide valve seats cooled well with dry ice. Force fit valve seat into cylinder head.

   CAUTION:

   - **Avoid directly to touching cold valve seats.**
   - **Cylinder head contains heat. When working, wear protective equipment to avoid getting burned.**

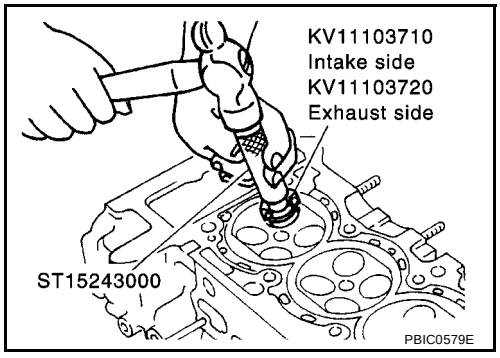

5. Using valve seat cutter set (commercial service tool) or valve seat grinder, finish the seat to the specified dimensions.

   CAUTION:

   When using valve seat cutter, firmly grip the cutter handle with both hands. Then, press on the contacting surface all around the circumference to cut in a single drive. Improper pressure on with the cutter or cutting many different times may result in stage valve seat.

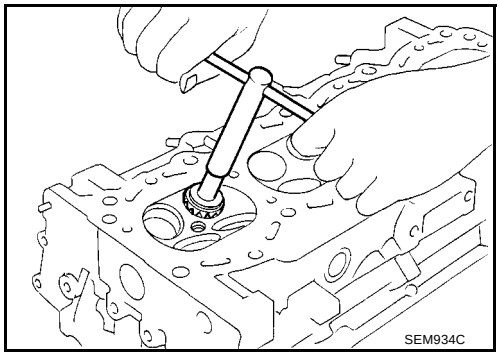

Grind to obtain the dimensions indicated in figure.

Standard:

D1 dia.	**: 27.8 - 28.0 mm (1.094 - 1.102 in)**
D2 dia.	**: 29.5 - 29.7 mm (1.161 - 1.169 in)**
D3 dia.	**: 31.9 - 32.1 mm (1.256 - 1.264 in)**
D4 dia.	**: 24.5 - 24.7 mm (0.965 - 0.972 in)**
D5 dia.	**: 26.2 - 26.4 mm (1.031- 1.039 in)**

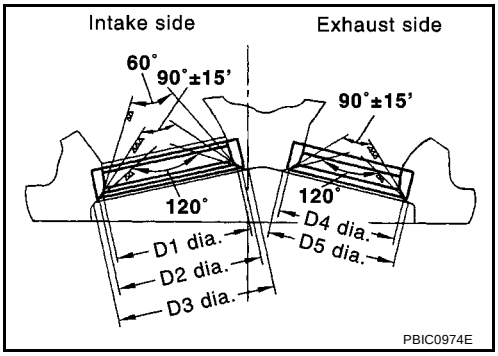

6. Using compound, grind to adjust valve fitting.
7. Check again for normal contact.

VALVE SPRING SQUARENESS

Set try square along the side of valve spring and rotate the spring. Measure the maximum clearance between the top face of spring and try square.

Limit : 1.8 mm (0.071 in)

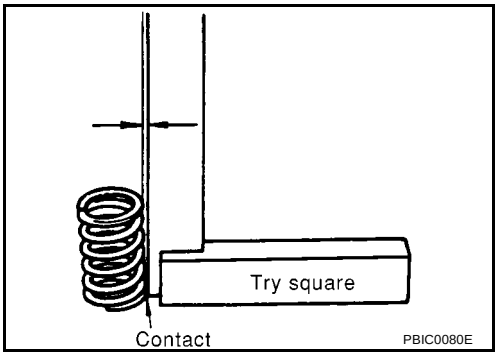

VALVE SPRING DIMENSIONS AND VALVE SPRING PRESSURE LOAD

Check valve spring pressure with valve spring seat installed at specified spring height.

CAUTION:

Do not remove valve spring seat.

Standard:

Free height	**40.0 mm (1.575 in)**
Installation height	**32.82 mm (1.2921 in)**
Installation load	**147.5 - 166.3 N (15.04 - 16.96 kg, 33.2 - 37.4 lb)**
Height during valve open	**23.64 mm (0.9307 in)**
Load with valve open	**347.8 - 392.2 N (35.5 - 40.0 kg, 78.2 - 88.2 lb)**

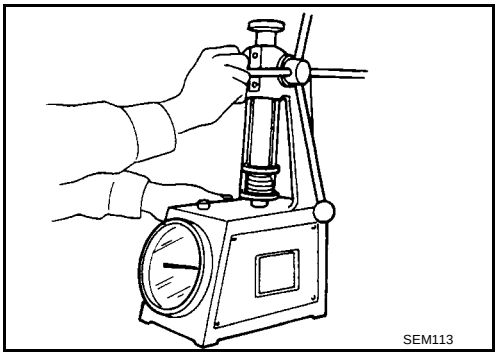

ENGINE ASSEMBLY

PFP:10001

Removal and Installation

EBS00QER

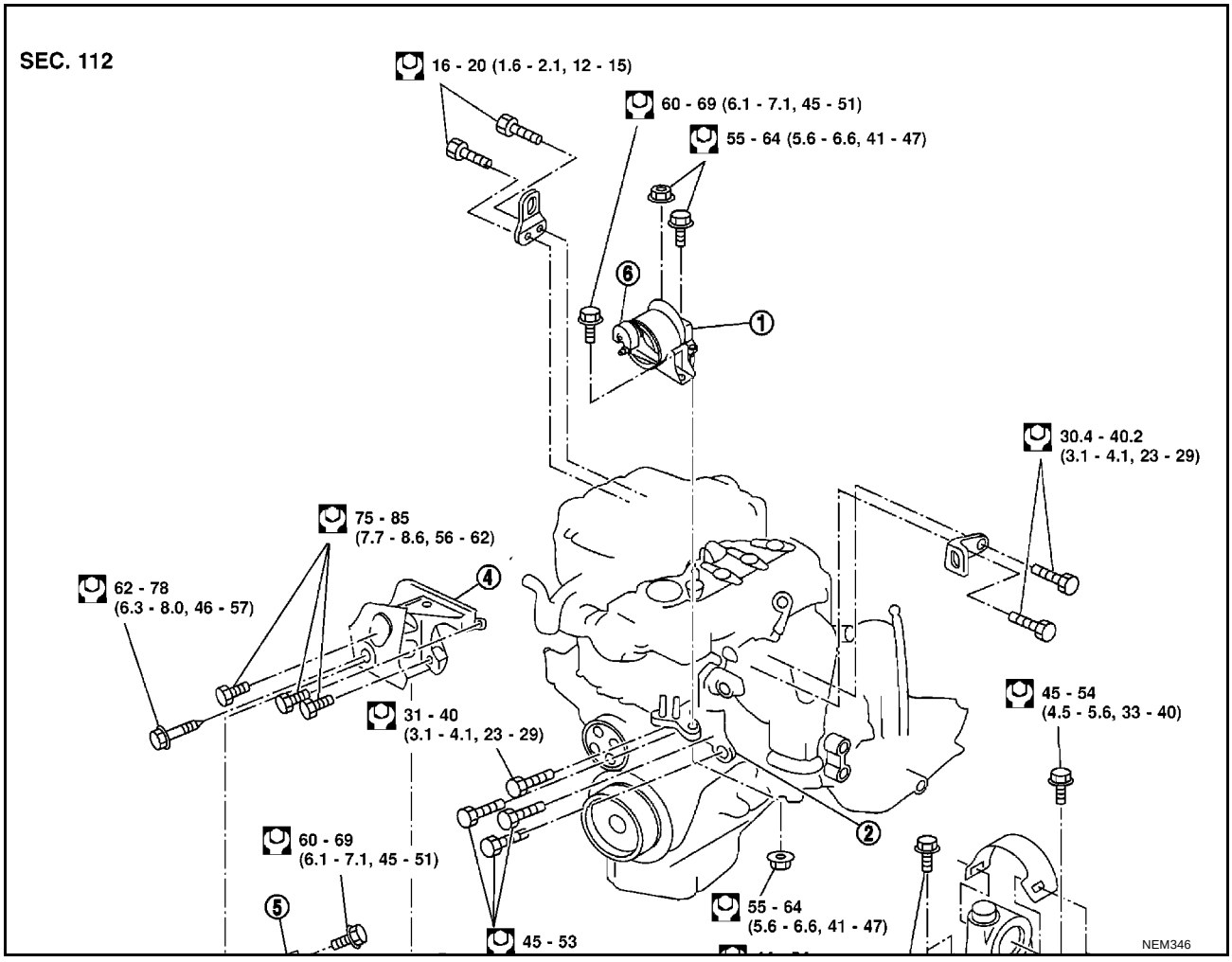

1. RH engine mounting	2. RH engine mounting bracket	3. LH engine mounting
4. Rear engine mounting bracket	5. Rear engine mounting	6. Dynamic damper (Specific models only)
7. center member	8. Front engine mounting bracket	9. Front engine mounting

WARNING:

- **Situate vehicle on a flat and solid surface.**
- **Place chocks at front and back of rear wheels.**
- **For engines not equipped with engine slingers, attach proper slingers and bolts described in PARTS CATALOG.**

CAUTION:

- **Always be careful to work safely, avoid forceful or uninstructed operations.**
- **Do not start working until exhaust system and coolant are cool enough.**
- **If items or work required are not covered by the engine main body section, refer to the applicable sections.**
- **Always use the support point specified for lifting.**
- **Use either 2-pole lift type or separate type lift as best you can. If board-on type is used for unavoidable reasons, support at the rear axle jacking point with transmission jack or similar tool before starting work, in preparation for the backward shift of center of gravity.**
- **For supporting points for lifting and jacking point at rear axle, refer to GI-43, “Lifting Points and Tow Truck Towing”.**

REMOVAL

Description of work

Remove engine and transaxle assembly from under vehicle. Then separate and remove engine.

Preparation

1. Release fuel pressure. Refer to EC-52, "FUEL PRESSURE RELEASE" (WITH EURO-OBD), EC-579, "FUEL PRESSURE RELEASE" (WITHOUT EURO-OBD).
2. Remove engine hood.
3. Drain coolant from radiator drain plug.
4. Remove coolant reservoir tank and bracket.
5. drain engine oil.
6. Remove the following parts.
   - Battery and battery tray
   - Undercover (with splash cover)
   - LH/RH front wheel
   - Drive belt; Refer to EM-15, "Removal and Installation" .
   - Alternator
   - Idler pulley and bracket Assembly
   - Air duct and air cleaner case assembly; Refer to EM-16, "Removal and Installation" .
   - Radiator upper hose, lower hose and A/T cooler hose
   - Radiator and cooling fan
   - Stabilizer bar
7. Disconnect engine room harness from the engine side and set it aside for easier work.
   - Disconnect harness connector of power steering oil pressure sensor.
8. Disconnect all the body-side hoses (vacuum hose, etc.) and ground at engine side.

Engine room LH

9. Disconnect fuel feed hoses.

   CAUTION:
   Install a plug to prevent fuel from draining.
10. Disconnect heater hose, and install plug it to prevent engine coolant from draining.
11. Disconnect select cable from transaxle and move. (A/T vehicle)

Engine room RH

12. Remove air conditioner compressor with piping connected from bracket. Temporarily secure it on body with a rope to avoid putting load on it.

Vehicle underbody

13. Remove exhaust front tube.
14. Remove power steering pump bracket from cylinder block. Using a rope, temporarily secure it with power steering pump to vehicle side.
15. Remove ABS wheel sensor and brake caliper. Then fix them on vehicle with rope or similar means.
16. Remove drive shaft from steering knuckle. Refer to AX-11, “Removal”.
17. Disconnect control rod and support rod form transaxle. (M/T vehicle)

Removal

18. Install engine slinger to front left of cylinder head.

    : 30.4 - 40.2 N·m (3.1 - 4.1 kg-m, 23 - 29 ft-lb)

    NOTE:
    For rear side, use those provided on engine.

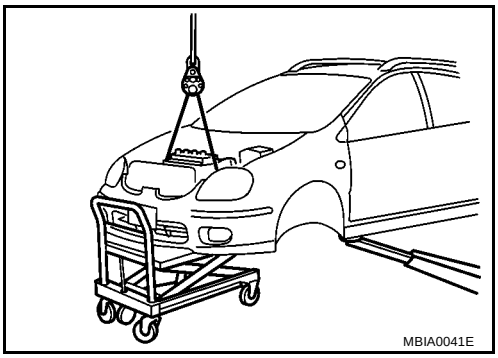

19. Install lifting chain hooks into engine slinger and suspend engine with hoist.
20. Lift with hoist and secure the engine in position.
    - Use a manual lift table caddy (commercial service tool) or equivalently rigid tool such as a jack or trestle. Securely support bottom of engine and transaxle, and simultaneously adjust hoist tension.

      CAUTION:
      - **Put a piece of wood or something similar as the supporting surface, secure a completely stable condition.**

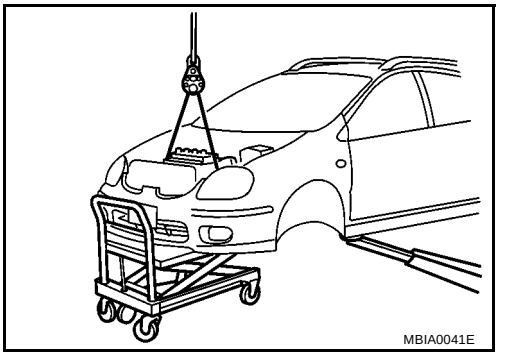

21. Remove RH engine mounting insulator.
22. Pull LH engine mounting through-bolt out.

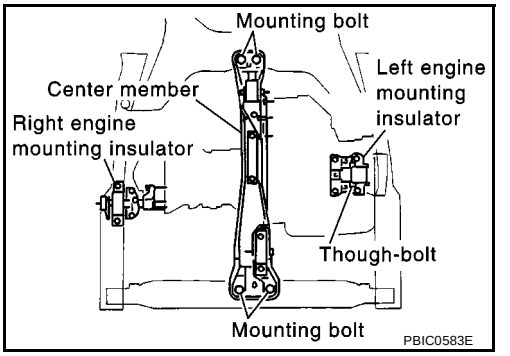

23. Remove mounting bolts at front and rear of center member.
24. Lower manual lift table caddy (or raise lift), and remove engine transaxle assembly from vehicle.

    CAUTION:
    - **When carrying out this work, be sure to check all parts for interference with vehicle body.**
    - **Be sure to check that all the applicable connections have been properly disconnected.**
    - **Be careful to prevent vehicle from dropping off the lift. Be aware that changes in center of gravity may cause balance incidents.**

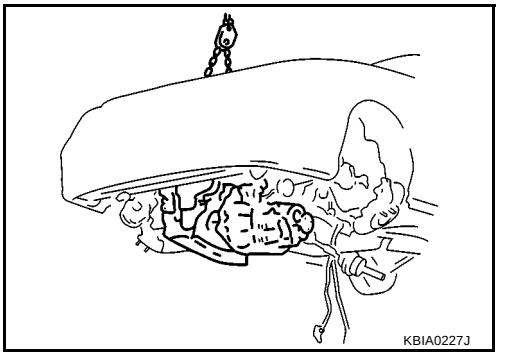

Disassembly

- The following shows engine and transaxle disassembly on level ground.

CAUTION:

During disassembly, always support bottom with a wooden block. Suspend engine slinger with a hoist. Be sure to check safety of work at any time.

25. Remove center member.
26. Remove engine mounting insulators and bracket.
27. Remove stater motor. Refer to SC-13, “Starting System”.
28. Separate engine and transaxle.

INSTALLATION

Install in the reverse order of removal.

- Do not allow oil to get on mounting insulator. Be careful not to damage mounting insulator.
- When installation directions are specified, install parts according to the direction marks on them referring to components illustration.
- Make sure that each mounting insulator is seated properly, and tighten mounting bolts and nuts.

INSPECTION AFTER INSTALLATION

- Before starting engine, check the levels of coolant, lubrications and working oils. If less than required quantity, fill to the specified level.

- Use procedure below to check for fuel leakage.
  a. Turn ignition switch ON (with engine stopped). With fuel pressure applied to fuel piping, check for fuel leakage at connection points.
  b. Start engine. With engine speed increased, check again for fuel leakage at connection points.
- Run engine to check for unusual noise and vibration.
- Warm up engine thoroughly to make sure there is no leakage of coolant, lubricants, working oil, fuel and exhaust gas.
- Bleed air from passages in pipes and tubes of applicable lines, such as in cooling system.
- After cooling down engine, again check amounts of coolant, lubricants, oil, and fluid. Refill to specified level, if necessary.

CYLINDER BLOCK

PFP:11010

Disassembly and Assembly

EBS00QES

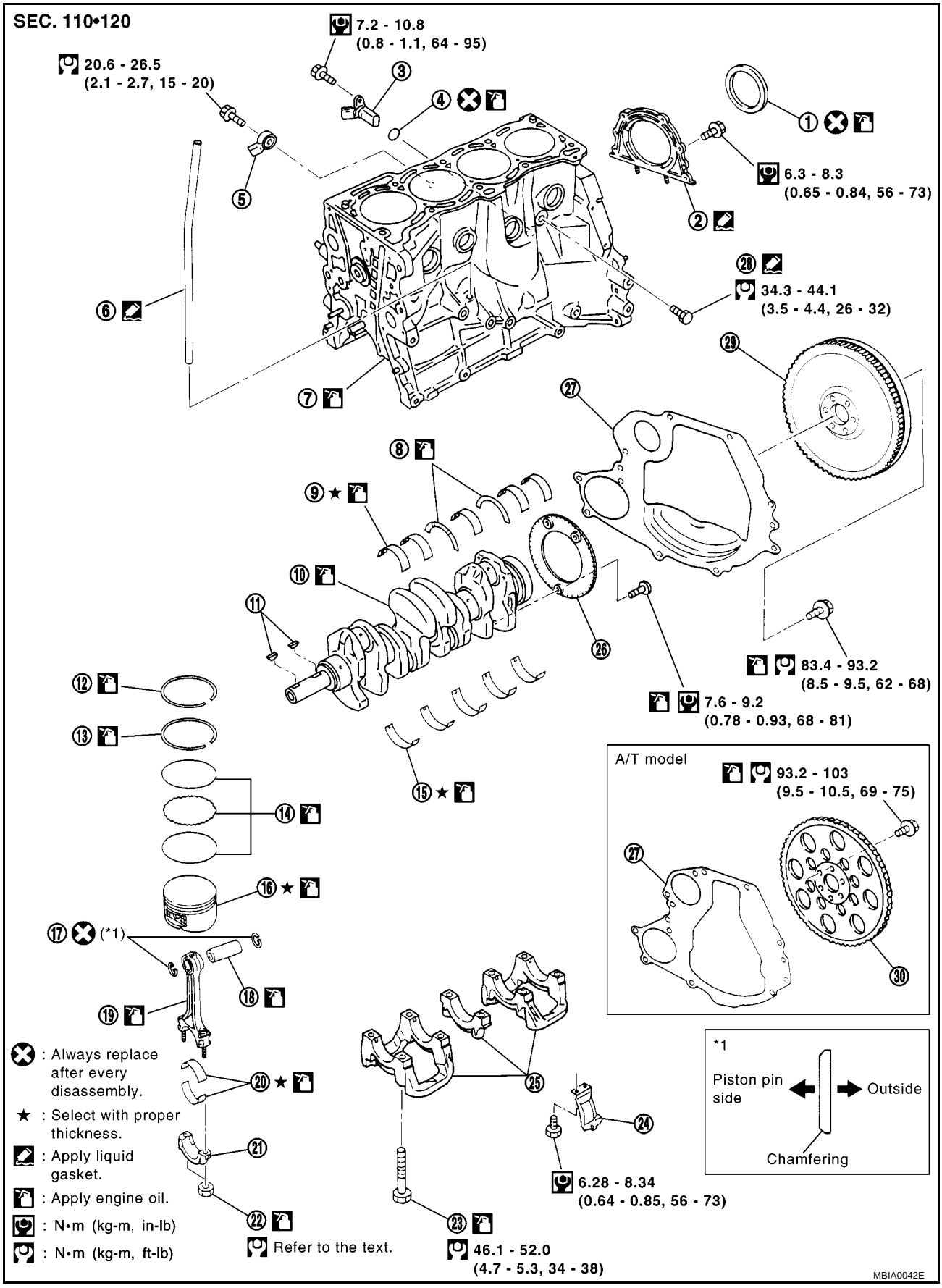

1. Rear oil seal	2. Rear oil seal retainer	3. Crankshaft position sensor (POS)
4. O-ring	5. Knock sensor	6. Oil level gauge guide
7. Cylinder block	8. Thrust bearing	9. Main bearing
10. Crankshaft	11. Key	12. Top ring
13. 2nd ring	14. Oil ring	15. Main bearing
16. Piston	17. Snap ring	18. Piston pin
19. Connecting rod	20. Connecting rod bearing	21. Connecting rod cap
22. Connecting rod nut	23. Main bearing cap bolt	24. Baffle plate
25. Main bearing cap	26. Signal plate	27. Rear plate
28. Coolant drain plug	29. Flywheel (M/T models)	30. Drive plate (A/T models)

CAUTION:
Apply new engine oil to parts marked in illustration before installation.

DISASSEMBLY

1. Remove engine and transaxle assembly from vehicle, and separate transaxle from engine. Refer to EM-70, "Removal and Installation" .
2. Mount engine on an engine stand with the following procedure.

a. Remove exhaust manifold and catalytic converter. Refer to EM-21, "Removal and Installation" .
b. Remove engine front mounting bracket, alternator and air compressor bracket.
c. Install engine sub-attachment to left side of cylinder block.

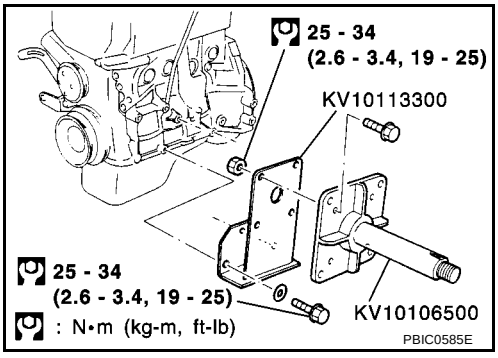

d. Lift engine, and mount it onto the engine stand.

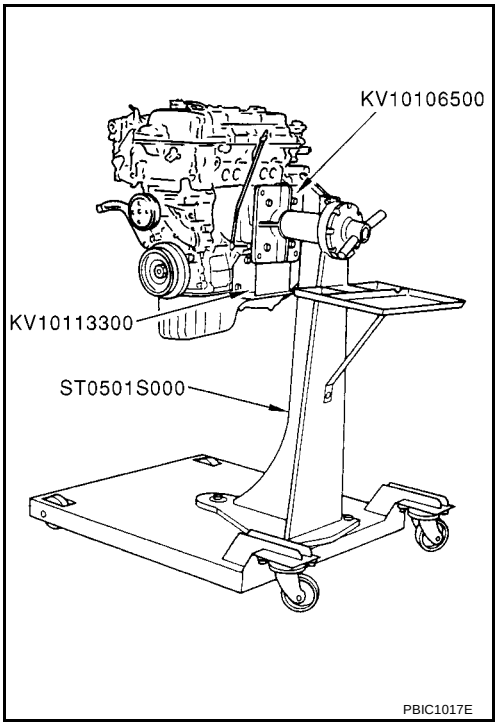

- A commercial engine stand can be used.

  NOTE:
  - This example is an engine stand for holding at transaxle mounting side with the flywheel or drive plate removed.

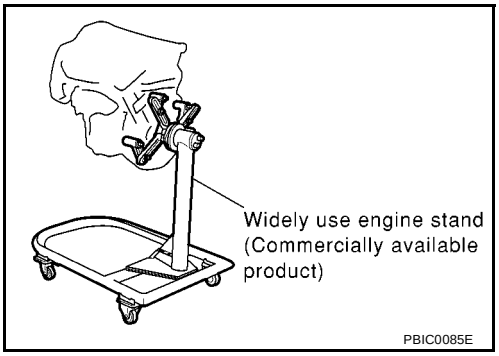

3. Drain engine oil and coolant from inside of engine.
4. Remove the following components and associated parts.
   - Fuel tube and injector assembly; Refer to EM-29, "Removal and Installation" .
   - Intake manifold and intake manifold collector assembly; Refer to EM-18, "Removal and Installation" .
   - Ignition coil; Refer to EM-27, "Removal and Installation" .
   - Rocker cover; Refer to EM-32, "Removal and Installation" .
   - Oil pan and oil strainer; Refer to EM-25, "Removal and Installation" .
   - Front cover and timing chain; Refer to EM-50, "Removal and Installation" .
   - Camshaft; Refer to EM-35, "Removal and Installation" .
   - Cylinder head assembly; Refer to EM-65, "Inspection After Disassembly" .
   - Auxiliary brackets and oil filter
5. Remove knock sensor.

   CAUTION:
   Avoid impacts such as a dropping.
6. Remove crankshaft position sensor (POS).

   CAUTION:
   - **Avoid impacts such as a dropping.**
   - **Do not disassemble.**
   - **Keep it away from metal particles.**
   - **Do not place sensor close to magnetic materials.**

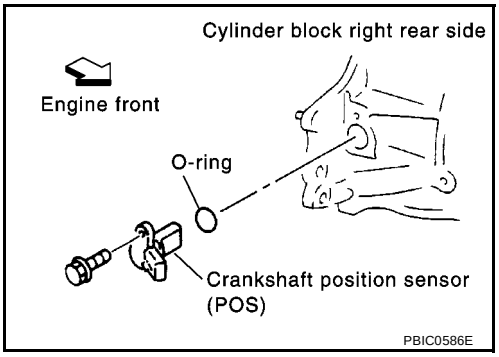

7. Remove flywheel (M/T models) or drive plate (A/T models). Fix crankshaft with a ring gear stopper (special service tool), and remove mounting bolts.
8. Remove rear plate.
9. Remove rear oil seal retainer.
   - Insert a flat-bladed screwdriver between main bearing cap and rear oil seal retainer to remove retainer.
10. Remove rear oil seal from rear oil seal retainer.
    - Punch out with a flat-bladed screwdriver.

    CAUTION:
    - **Be careful not to damage rear oil seal retainer.**

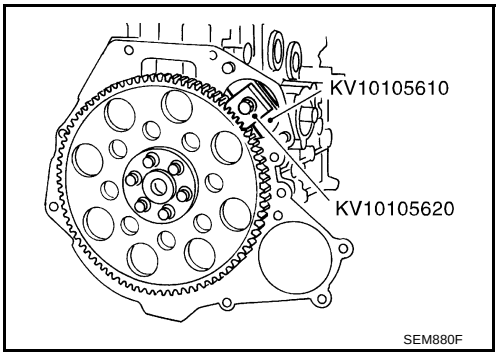

11. Remove the piston and connecting rod assembly.
    - Before removing the piston and connecting rod assembly, check the connecting rod side clearance. Refer to EM-88, "CONNECTING ROD SIDE CLEARANCE" .

a. Position the crankshaft pin corresponding to the connecting rod to be removed onto the bottom dead center.

b. Remove the connecting rod cap.

c. Using a hammer handle or similar tool, push the piston and connecting rod assembly out to the cylinder head side.

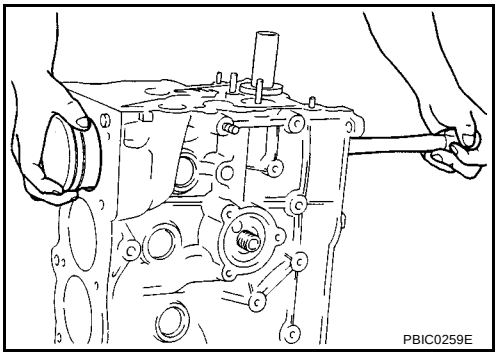

12. Remove the connecting rod bearings.

CAUTION:

- **When removing them, note the installation position. Keep them in the correct order.**

13. Remove the piston rings form the piston.
    - Before removing the piston rings, check the piston ring side clearance. Refer to EM-89, "PISTON RING SIDE CLEARANCE" .
    - Use a piston ring expander (commercial service tool).

CAUTION:

- **When removing the piston rings, be careful not to damage the piston.**
- **Be careful not to damage piston rings by expanding them excessively.**

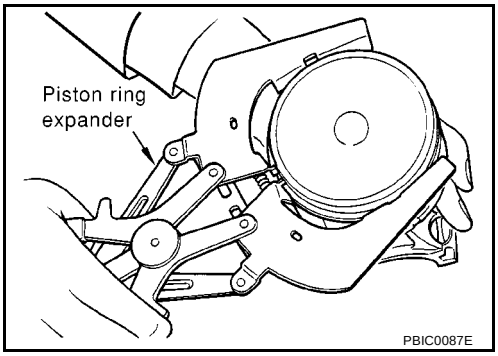

14. Remove the piston from the connecting rod as follows:

a. Using a snap ring pliers, remove the snap ring.

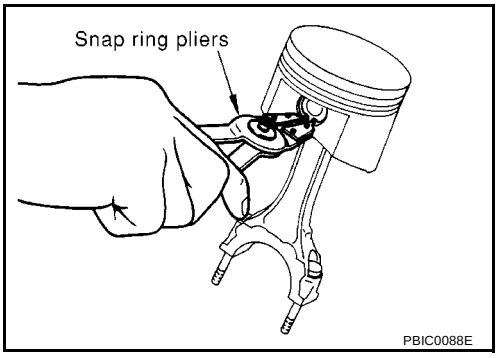

b. Heat piston to 60 to 70°C (140 to 158°F) with drier or equivalent.

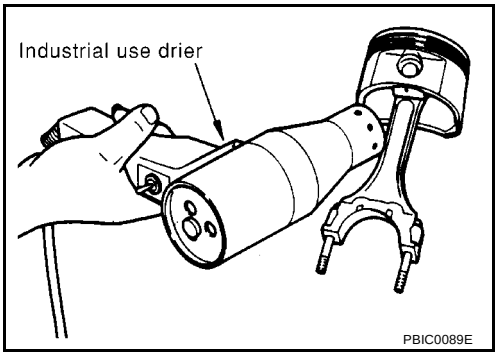

c. Push out piston pin with stick of outer diameter approximately 17 mm (0.67 in).

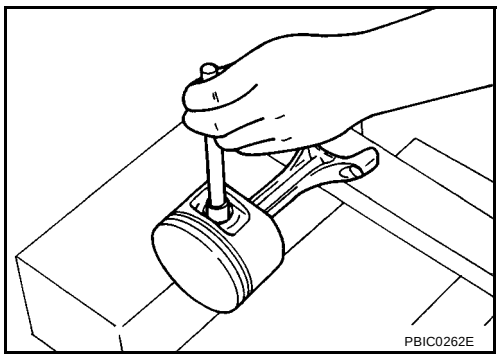

15. Remove main bearing cap bolts.
    - Loosen main bearing cap bolts in several steps in reverse order shown in the figure, and remove them.
    - Measure crankshaft side clearance before loosening main bearing cap bolts. Refer to EM-87, "CRANKSHAFT SIDE CLEARANCE" .

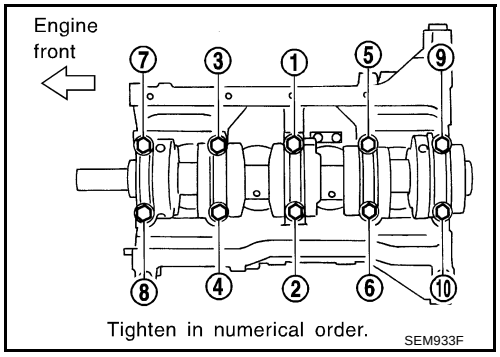

16. Remove main bearing caps.
    - Using main bearing cap bolts as shown, remove center main bearing cap while shaking it back-and-forth.

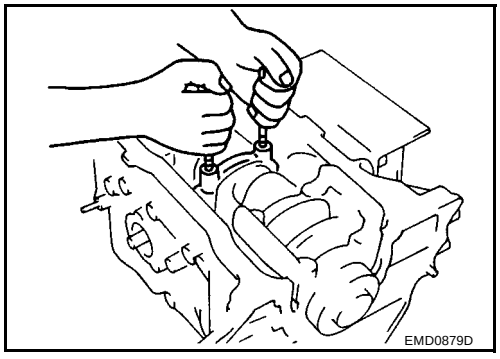

    - To remove front and rear main bearing caps, lever them off using screwdriver or similar tool. Or, using a plastic hammer, tap them back-and-forth.

      CAUTION:
      Using shop cloth or wooden block, protect oil pan mounting surface on cylinder block, so that mounting surface is not damaged.

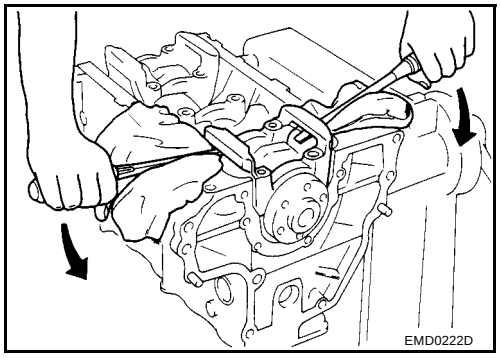

17. Remove crankshaft.

CAUTION:
- **When placing crankshaft on ground, be careful not to damage signal plate.**
- **Never remove signal plate unless it is necessary.**

NOTE:
If it is removed, positioning dowel pin (dowel pins for crankshaft and signal plate are specified as a single set) must be reinstalled.

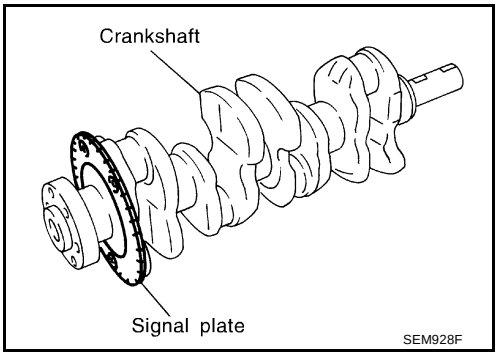

18. Remove main bearing and thrust bearing from cylinder block and main bearing cap.

CAUTION:
Check mounting positions, and store them without mixing them up.

19. Remove baffle plate.

ASSEMBLY

1. Blow air sufficiently through engine coolant passage of cylinder block, oil passage, crank case and cylinder bore to remove foreign objects.
2. Install oil jet for timing chain lubrication.
   - Face its flat surface upward, and push it as far as it will go.
3. Install baffle plate.

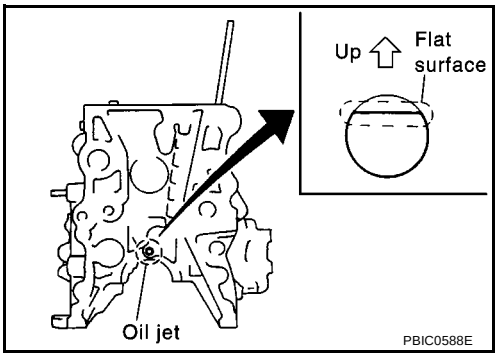

4. Install the main bearings and the thrust bearings.

a. Remove dust, dirt, and oil on the bearing mating surfaces of the cylinder block and the lower cylinder block.

b. Install the thrust bearings to the both sides of the No. 3 journal housing on the cylinder block.
   - Install the thrust bearings with the oil groove facing the crankshaft arm (outside).

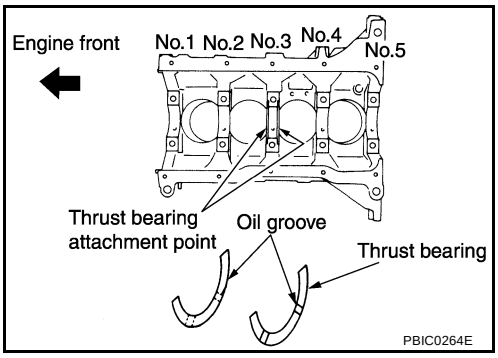

c. Install the main bearings paying attention to the direction.
   - The main bearing with an oil hole and groove goes on the cylinder block. The one without them goes on the lower cylinder block.
   - Main bearings (cylinder block side) for journal No. 1 and for No. 2 to No. 5 are different.
   - Before installing the bearings, apply engine oil to the bearing surface (inside). Do not apply oil to the back surface, but thoroughly clean it.
   - When installing, align the bearing stopper to the notch.
   - Ensure the oil holes on cylinder block and those on the corresponding bearing are aligned.

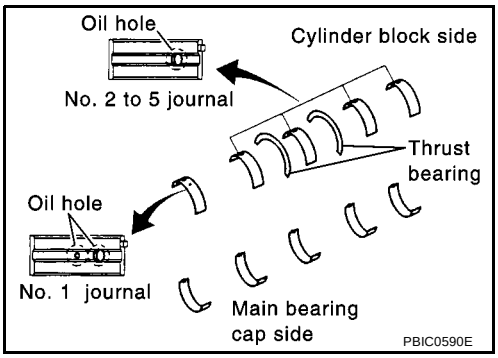

5. Install the signal plate to the crankshaft.

a. Position crankshaft and signal plate using a positioning dowel pin, and tighten mounting bolts.

b. Remove dowel pin.

CAUTION:
Be sure to remove dowel pin.

NOTE:
- Dowel pins of crankshaft and signal plate are provided as a set for each.
- If dowel pin is not available (when crankshaft and signal plate are reused), use M6 bolt [length under head: 10 mm (0.39 in) or longer] as its substitute.

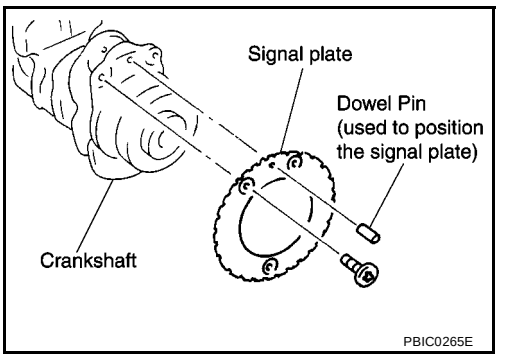

6. Install the crankshaft to the cylinder block.
- While turning the crankshaft by hand, check that it turns smoothly.

7. Install main bearing cap.
- Main bearing cap is identified by identification paint No. made on it before it is removed.
- Install it with arrow facing to front.

NOTE:
Main bearing cap cannot be replaced as a single part, because it is machined together with cylinder block.

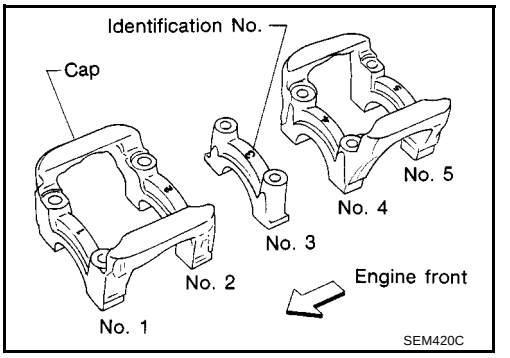

8. Tighten main bearing bolts in several steps in numerical order shown in the figure.
- Apply engine oil onto thread and seat of mounting bolt.
- After tightening bolts to specified torque, make sure that crankshaft rotates smoothly.
- Check crankshaft side clearance. Refer to EM-87, "CRANKSHAFT SIDE CLEARANCE" .

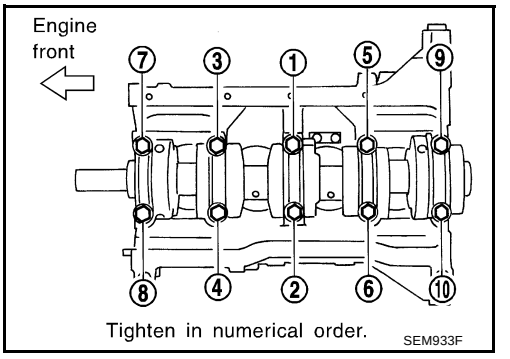

9. Install piston to connecting rod.

a. Using snap ring pliers, install snap ring to groove of piston rear side.
- Install with chamfered side facing piston pin side. Refer to EM-74, "Disassembly and Assembly" .

b. Install piston to connecting rod.
- Using hot-air blower, heat piston to 60 to 70°C (140 to 158°F) so that piston pin can be easily inserted by hand. Insert piston pin into piston and connecting rod from front side of piston.
- Assemble so that front mark on piston head and oil hole in connecting rod are positioned as shown in the figure.

c. Install snap ring to front side of piston.
- Refer to step “a” to install snap ring.
- After installation, make sure that connecting rod moves smoothly.

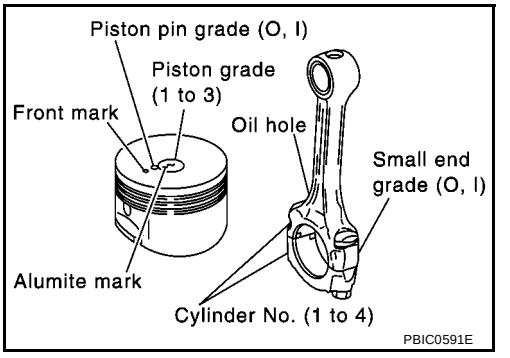

10. Install piston rings with piston ring expander (commercial service tool).

CAUTION:

- **Be careful not to damage piston.**
- **When installing top ring, be careful not to break end gap step.**
- Position end gaps of each piston ring to piston front mark as shown in figure, then install rings.
- Install top ring with stamp mark side facing upward.

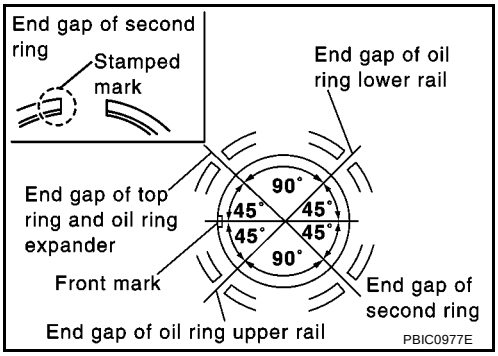

11. Install the connecting rod bearings to the connecting rod and the connecting rod cap.
    - When installing the connecting rod bearings, apply engine oil to the bearing surface (inside). Do not apply oil to the back surface, but thoroughly clean it.
    - When installing, align the connecting rod bearing stopper protrusion with the notch of the connecting rod to install.
    - Check the oil holes on the connecting rod and those on the corresponding bearing are aligned.

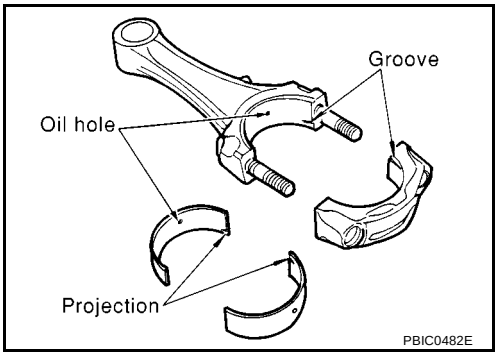

12. Install the piston and connecting rod assembly to the crankshaft.
    - Position the crankshaft pin corresponding to the connecting rod to be installed onto the bottom dead center.
    - Apply engine oil sufficiently to the cylinder bore, piston and crankshaft pin.
    - Match the cylinder position with the cylinder No. on the connecting rod to install.
    - Using a piston ring compressor, install the piston with the front mark on the piston crown facing the front of the engine.

    CAUTION:
    Be careful not to damage the crankshaft pin, resulting from an interference of the connecting rod big end.

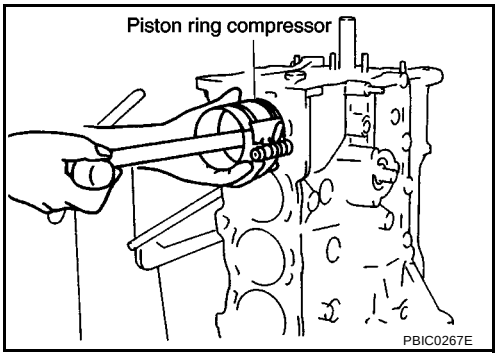

13. Install the connecting rod cap.
    - Match the stamped cylinder number marks on the connecting rod with those on the cap to install.

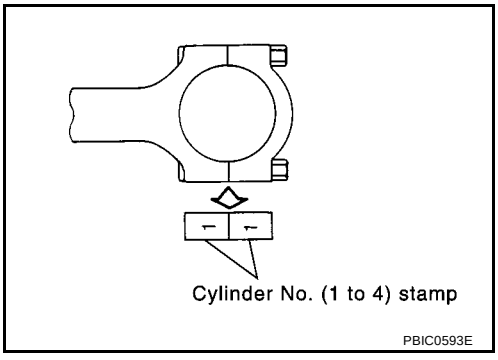

14. Tighten connecting rod nuts with the following procedure.

a. Lubricate connecting rod bolts and seat of nuts with new engine oil.

b. Tighten to a torque of 13.72 - 15.68 N·m (1.4 - 1.5 kg-m, 10.2 - 11.5 ft-lb)

c. Turn all nuts another 35 to 40 degrees (Target: 35 degrees).

CAUTION:

Always use angle wrench (special service tool). Avoid tightening based on visual check alone.

- After tightening nuts, make sure that crankshaft rotates smoothly.
- Check connecting rod side clearance. Refer to EM-88, "CONNECTING ROD SIDE CLEARANCE" .

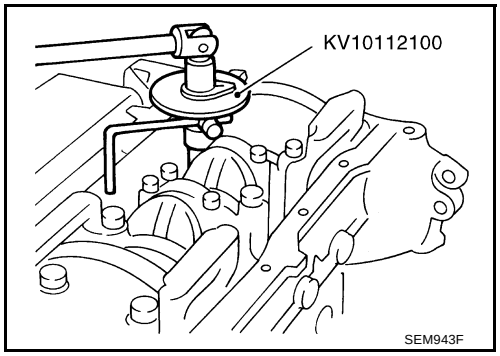

15. Install rear oil seal.

- Use an oil seal drift (commercial service tool) to press it in. At this time, be careful not to cause any scratches or burrs on circumference of oil seal.

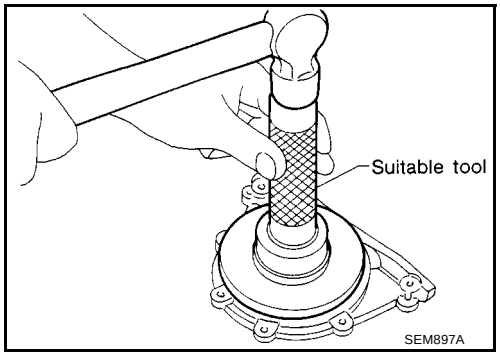

- Press oil seal into rear oil seal retainer until it does not project from end.

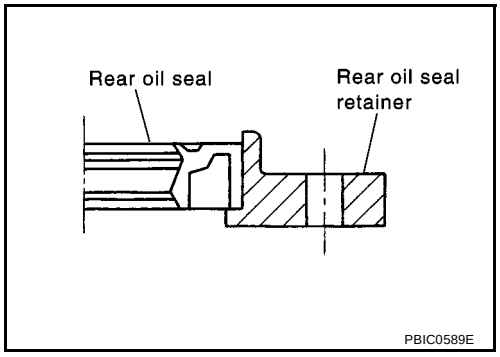

16. Install rear oil seal retainer.

- Apply continuous bead of liquid gasket to parts shown in figure.
- Install rear oil seal retainer by aligning it with dowel pins on cylinder block.

17. Install rear plate.

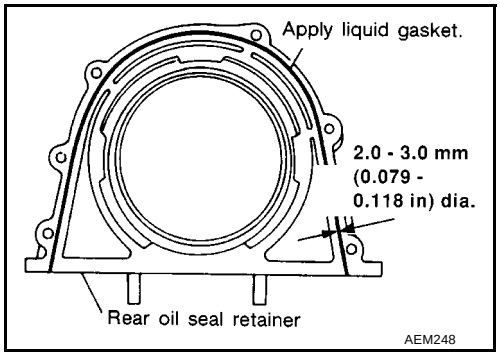

18. Install flywheel or drive plate.
    - Install drive plate in direction shown in figure.
    - Fix crankshaft with ring gear stopper (special service tool).
    - Tighten mounting bolts diagonally in several steps.

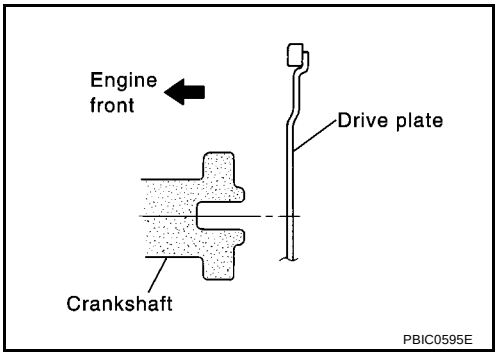

19. Install oil level gauge guide.
    - Press it in with punch mark for installing instruction in direction shown in figure.
    - Apply locking agent to pressed position.

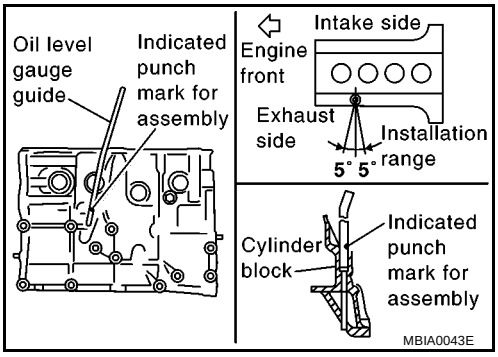

20. Install knock sensor.
    - Install sensor with connector facing lower right by 45° as shown.

    CAUTION:
    - **If any impact by dropping is applied to the knock sensor, replace it with new one.**
    - **Make sure that there is no foreign material on the cylinder block mating surface and the back surface of the knock sensor.**
    - **Do not tighten the mounting bolts while holding the connector.**
    - **Make sure that the knock sensor does not interfere with other parts.**

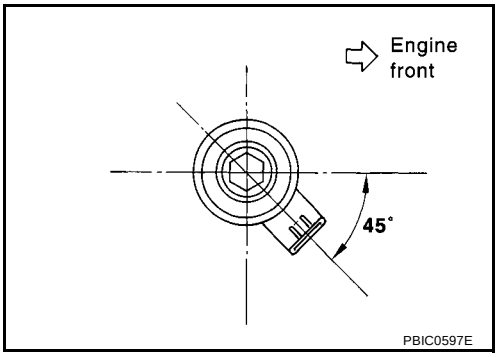

21. Install crankshaft position sensor (POS).
    - Tighten bolt after fully inserting crankshaft position sensor (POS) into cylinder block.
22. Tighten accessory brackets to the following tightening torque.

    Power steering pump bracket:

    : 16.7 - 23.5 N·m (1.7 - 2.4 kg-m, 13 - 17 ft-lb)

    Alternator air conditioner compressor bracket:

    : 29.4 - 34.3 N·m (3.0 - 3.5 kg-m, 22 - 25 ft-lb)
23. Assemble in the reverse order of disassembly.

How to Select Piston and Bearing

EBS00QET

DESCRIPTION

Selection points	Selection parts	Selection items	Selection methods
Between cylinder block to crankshaft	Main bearing	Main bearing grade (bearing thickness)	Determined by match of cylinder block bearing housing grade (inner diameter of housing) and crankshaft journal grade (outer diameter of journal)
Between crankshaft to connecting rod	Connecting rod bearing	Connecting rod bearing grade (bearing thickness)	Connecting rod bearing grade = crankshaft pin grade (outer diameter of pin). No grade exists for inner diameter to connecting rod large end.
Between cylinder block to piston	Piston and piston pin assembly The piston is available together with piston pin as an assembly.	Piston grade (piston outer diameter)	Piston grade = cylinder bore grade (inner diameter of bore)
*Between piston to connecting rod	—	—	—

*For the service parts, the grade for fitting cannot be selected between a piston pin and a connecting rod. (Only 0 grade is available.) The information at the shipment from the plant is described as a reference.

- The identification grade stamped on each part is the grade for the dimension measured in new condition. This grade cannot apply to reused parts.
- For reused or repaired parts, measure the dimension accurately. Determine the grade by comparing the measurement with the values of each selection table.
- For details of the measurement method of each part, the reuse standards and the selection method of the selective fitting parts, refer to the text.

HOW TO SELECT PISTON

When New Cylinder Block is Used

- Check the cylinder bore grade (1,2 or 3) on rear lower surface of cylinder block, and select a piston of the same grade.

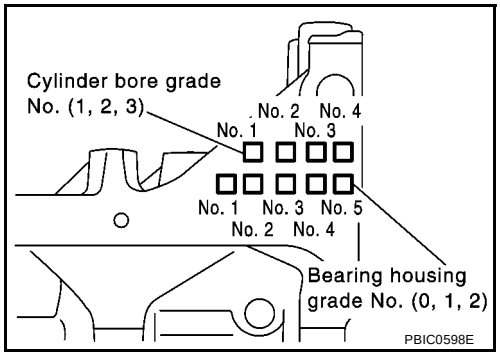

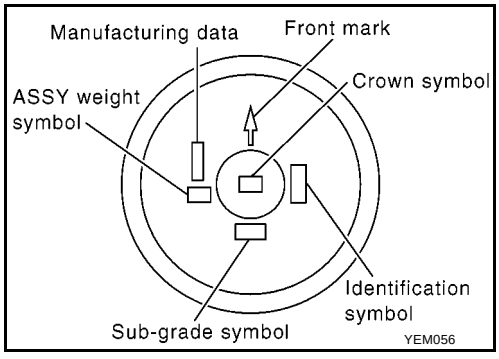

When Cylinder Block is Reused

1. Measure the cylinder block bore inner diameter.

2. Determine the bore grade by comparing the measurement with the values under the cylinder bore inner diameter of the “Piston Selection Table”. Select the piston of the same grade.

Piston Selection Table

Unit: mm (in)

Grade number (Mark)	1	2 (or no punching)	3
Inner diameter of cylinder bore	80.000 - 80.010 (3.1496 - 3.1500)	80.010 - 80.020 (3.1500 - 3.1504)	80.020 - 80.030 (3.1504 - 3.1508)
Outer diameter of piston	79.965 - 79.975 (3.1482 - 3.1486)	79.975 - 79.985 (3.1486 - 3.1490)	79.985 - 79.995 (3.1490 - 3.1494)

CAUTION:
No stamp mark is only applied to piston side.

NOTE:
- The piston is available together with piston pin as an assembly.
- The piston pin (piston pin bore) grade is provided only for the parts installed at the plant. For service parts, no grades can be selected. (Only 0 grade is available.)

HOW TO SELECT CONNECTING ROD BEARING

When New Connecting Rod and Crankshaft are Used

- Compare the pin diameter grade (0, 1 or 2) of the crankshaft on front surface with the values of the selection table of connecting rod bearing.

  NOTE:
  There is no grading for connecting rod big end.

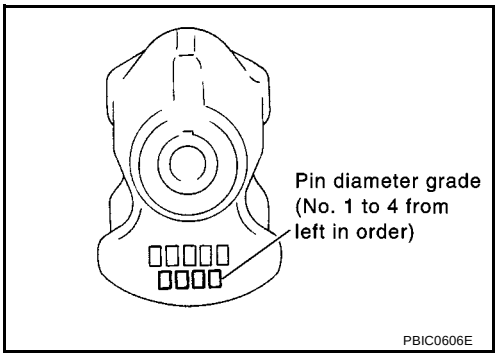

When Crankshaft and Connecting Rod are Reused

1. Confirm connecting rod big end inner diameter is within the standard.
2. Measure the pin outer diameter of the crankshaft.
3. Find measured dimension in “Crankshaft pin outer diameter” column in selective-fit service parts table, and select connecting rod bearing of same grade number.

Connecting Rod Bearing Selection Table

Unit: mm (in)

Connecting rod big end ID		43.000 - 43.013 (1.6929 - 1.6934)	
Crankshaft pin OD	Grade (punched)	0 (no punching)	
39.968 - 39.974 (1.5735 - 1.5738)	0	● Bearing grade No. ● Bearing thickness ● Oil clearance ● Identification color	STD 0 1.503 - 1.506 (0.0592 - 0.0593) 0.014 - 0.039 (0.0006 - 0.0015) Black
39.962 - 39.968 (1.5733 - 1.5735)	1	● Bearing grade No. ● Bearing thickness ● Oil clearance ● Identification color	STD 1 1.506 - 1.509 (0.0593 - 0.0594) 0.014 - 0.039 (0.0006 - 0.0015) Red
39.956 - 39.962 (1.5731 - 1.5733)	2	● Bearing grade No. ● Bearing thickness ● Oil clearance ● Identification color	STD 2 1.509 - 1.512 (0.0594 - 0.0595) 0.014 - 0.039 (0.0006 - 0.0015) Green

Undersize Bearings Usage Guide

- When the specified oil clearance is not obtained with standard size connecting rod bearings, use undersize (US) bearings.
- When using undersize bearing, measure the bearing inner diameter with bearing installed, and grind the crankshaft pin so that the oil clearance satisfies the standard.

Bearing undersize table

Unit: mm (in)

Size	Thickness
US 0.08 (0.0031)	1.542 - 1.546 (0.0607 - 0.0609)
US 0.12 (0.0047)	1.562 - 1.566 (0.0615 - 0.0617)
US 0.25 (0.0098)	1.627 - 1.631 (0.0641 - 0.0642)

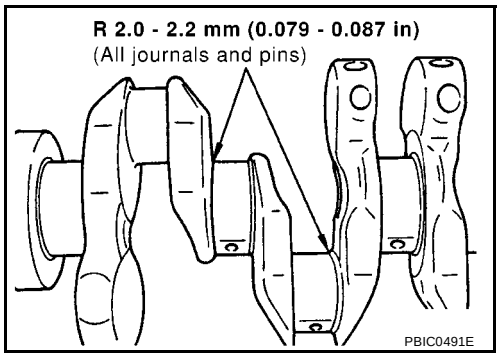

CAUTION:
In grinding the crankshaft pin to use undersize bearings, keep the fillet R (All crankshaft pins).

HOW TO SELECT MAIN BEARING

When New Cylinder Block and Crankshaft are Used

1. Apply main bearing housing grade (0, 1 or 2) on bottom of cylinder block banks to row in main bearing selection table.

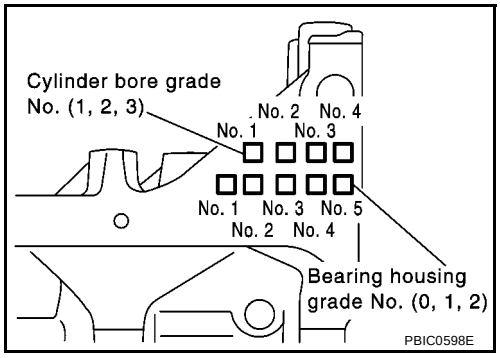

2. Apply journal diameter grade (0, 1 or 2) on crankshaft front to column in main bearing selection table.
3. Select main bearing (STD 0 - 4) at the point where selected row and column meet in following main bearing selection table.

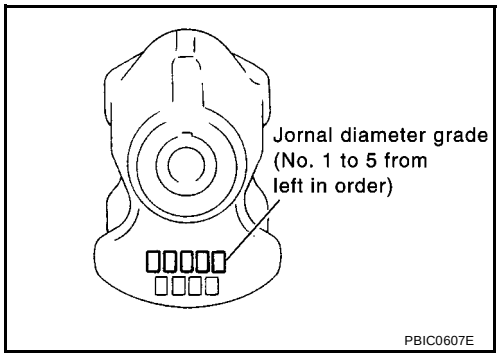

When Cylinder Block and Crankshaft are Reused

1. Measure dimension of main bearing housing on cylinder block.
2. Find measured dimension in “Cylinder block main bearing housing inner diameter” row in following main bearing selection table.
3. Measure crankshaft journal diameter.
4. Find measured dimension in “Crankshaft journal outer diameter” column in following main bearing selection table.
5. Select main bearing (STD 0 - 4) at the point where selected row and column meet in following main bearing selection table.

Main Bearing Selection Table

Unit: mm (in)

Connecting block main bearing housing ID			53.644 - 53.652 (2.1120 - 2.1123)	53.652 - 53.660 (2.1123 - 2.1126)	53.660 - 53.668 (2.1126 - 2.1129)
Crankshaft journal OD	Grade (punched)		0	1	2
49.956 - 49.964 (1.9668 - 1.9671)	0	● Bearing grade No. ● Bearing thickness ● Oil clearance ● Identification color	STD 0 1.826 - 1.830 (0.0719 - 0.0720) 0.020 - 0.044 (0.0008 - 0.0017) Black	STD 1 1.830 - 1.834 (0.0720 - 0.0722) 0.020 - 0.044 (0.0008 - 0.0017) Red	STD 2 1.834 - 1.838 (0.0722 - 0.0724) 0.020 - 0.044 (0.0008 - 0.0017) Green
49.948 - 49.956 (1.9665 - 1.9668)	1	● Bearing grade No. ● Bearing thickness ● Oil clearance ● Identification color	STD 1 1.830 - 1.834 (0.0720 - 0.0722) 0.020 - 0.044 (0.0008 - 0.0017) Red	STD 2 1.834 - 1.838 (0.0722 - 0.0724) 0.020 - 0.044 (0.0008 - 0.0017) Green	STD 3 1.838 - 1.842 (0.0724 - 0.0725) 0.020 - 0.044 (0.0008 - 0.0017) Yellow
49.940 - 49.948 (1.9661 - 1.9665)	2	● Bearing grade No. ● Bearing thickness ● Oil clearance ● Identification color	STD 2 1.834 - 1.838 (0.0722 - 0.0724) 0.020 - 0.044 (0.0008 - 0.0017) Green	STD 3 1.838 - 1.842 (0.0724 - 0.0725) 0.020 - 0.044 (0.008 - 0.0017) Yellow	STD 4 1.842 - 1.846 (0.0725 - 0.0727) 0.020 - 0.044 (0.0008 - 0.0017) Blue

Use Undersize Bearing Usage Guide

- Use undersize (US) bearing when oil clearance with standard size main bearing is not within specification.
- When using undersize (US) bearing, measure the bearing inner diameter with bearing installed, and grind journal until oil clearance falls within specification.

Bearing undersize table

Unit: mm (in)

Size	Thickness
US 0.25 (0.0098)	1.960 - 1.964 (0.0722 - 0.0773)
US 0.50 (0.0197)	2.085 - 2.089 (0.0821 - 0.0822)

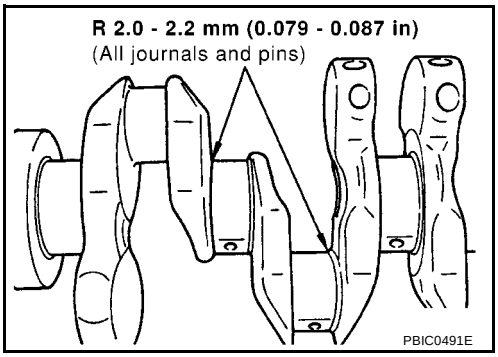

CAUTION:
Keep fillet R when grinding crankshaft journal in order to use undersize bearing (All journals).

Inspection After Disassembly

EBS00QEU

CRANKSHAFT SIDE CLEARANCE

- Using a dial gauge, measure the clearance between the thrust bearings and the crankshaft arm when the crankshaft is moved fully forward or backward.

  Standard : 0.060 - 0.260 mm (0.0024 - 0.0102 in)
  Limit : 0.3 mm (0.012 in)

- If the measured value exceeds the limit, replace the thrust bearings, and measure again. If it still exceeds the limit, replace the crankshaft also.

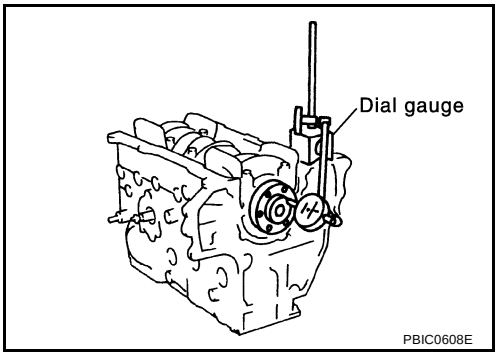

CONNECTING ROD SIDE CLEARANCE

- Measure side clearance between connecting rod and crankshaft arm with feeler gauge.

  Standard : 0.200 - 0.470 mm (0.0079 - 0.0185 in)
  Limit : 0.5 mm (0.020 in)

- If the measured value exceeds the limit, replace the connecting rod bearings, and measure again. If it still exceeds the limit, replace the crankshaft also.

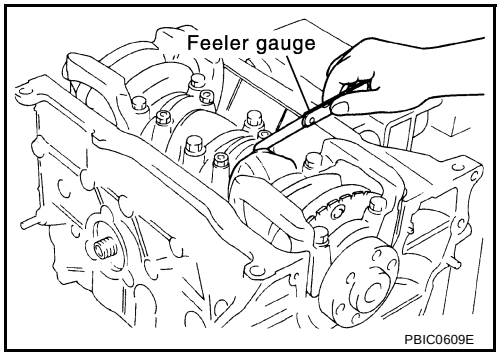

PISTON AND PISTON PIN CLEARANCE

Inner Diameter of Piston Pin

- Measure the inner diameter of piston pin bore with an inside micrometer.

  Standard : 18.993 - 18.999 mm (0.7478 - 0.7480 in)

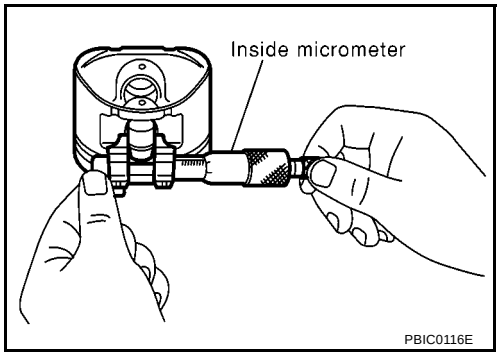

Outer Diameter of Piston Pin

- Measure outer diameter of piston pin with a micrometer.

  Standard : 18.989 - 19.001 mm (0.7476 - 0.7481 in)

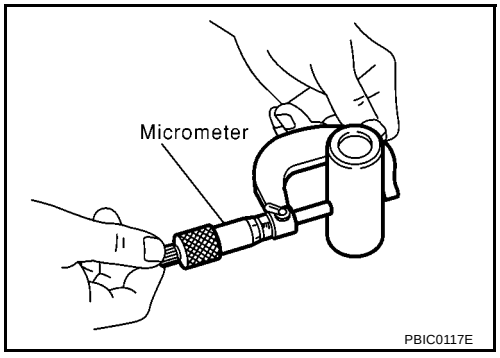

Piston and Piston Pin Clearance

(Piston pin clearance) = (Piston pin bore diameter) – (Outer diameter of piston pin)

Standard: 0.002 - 0.006 mm (0.0001 - 0.0002 in)

- If clearance exceeds specification, replace either or both of piston/piston pin assembly and connecting rod assembly with reference to specification of each parts.
- Refer to piston selection table to replace piston/piston pin assembly, EM-84, "HOW TO SELECT PISTON" .

NOTE:

- Regarding marks on piston head, refer to EM-84, "HOW TO SELECT PISTON" .

- Piston pin hole (piston pin) grade are provided only for the parts installed at the plant. For service parts, no grades can be selected. (Only 0 grade is available.)

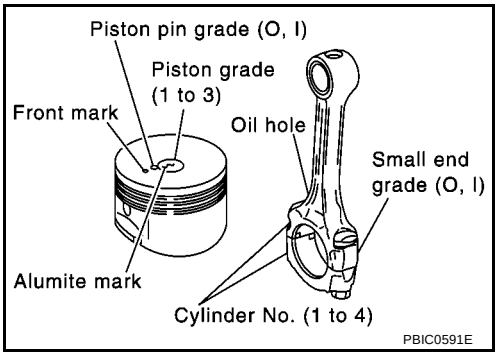

PISTON RING SIDE CLEARANCE

- Measure side clearance of piston ring and piston ring groove with feeler gauge.

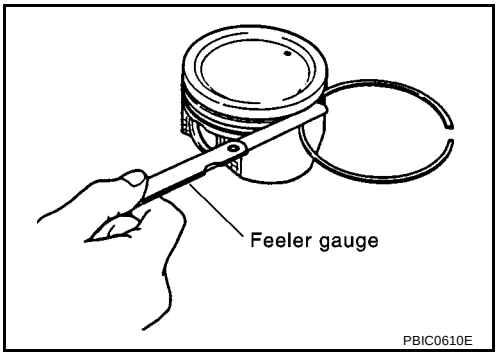

Standard:

Top ring	**: 0.040 - 0.080 mm (0.0016 - 0.0031 in)**
2nd ring	**: 0.030 - 0.070 mm (0.0012 - 0.0028 in)**
Oil ring	**: 0.045 - 0.155 mm (0.0018 - 0.0061 in)**

Limit:

Top ring	**: 0.110 mm (0.0043 in)**
2nd ring	**: 0.100 mm (0.0039 in)**

- If out of specification, replace piston and/or piston ring assembly.

PISTON RING END GAP

- Check if inner diameter of cylinder bore is within specification. Refer to EM-92, "PISTON TO CYLINDER BORE CLEARANCE".
- Insert piston ring until middle of cylinder with piston, and measure gap.

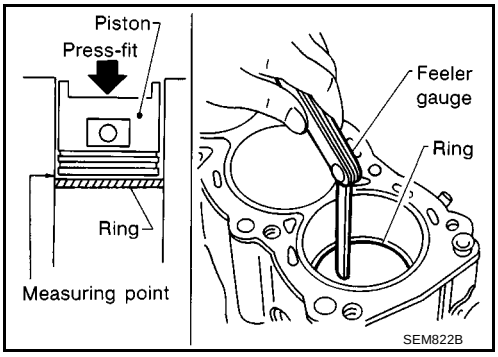

Standard:

Top ring	**: 0.20 - 0.39 mm (0.0079 - 0.0154 in)**
2nd ring	**: 0.32 - 0.56 mm (0.0126 - 0.0220 in)**
Oil ring	**: 0.20 - 0.69 mm (0.0079 - 0.0272 in)**

Limit:

Top ring	**: 0.54 mm (0.0213 in)**
2nd ring	**: 0.67 mm (0.0264 in)**
Oil ring	**: 0.95 mm (0.0374 in)**

- If out of specification, replace piston ring. If gap still exceeds the limit even with a new ring, re-bore cylinder and use oversized piston and piston ring.

CONNECTING ROD BEND AND TORSION

- Check with connecting rod aligner.

Bend:

Limit: 0.15 mm (0.0059 in) per 100 mm (3.94 in) length

Torsion:

Limit: 0.30 mm (0.0118 in) per 100 mm (3.94 in) length

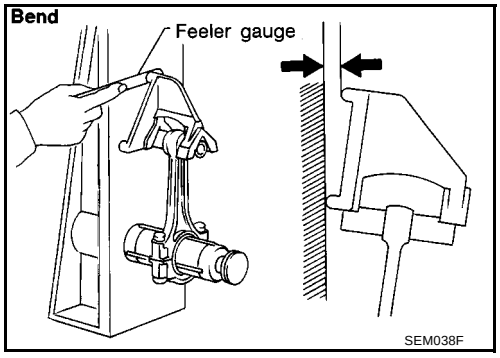

- If it exceeds the limit, replace connecting rod assembly.

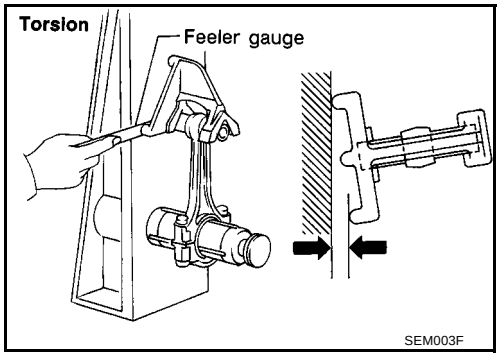

CONNECTING ROD BEARING (BIG END)

- Install the connecting rod cap without the connecting rod bearing installed. After tightening the connecting rod bolt to the specified torque, measure the connecting rod big end inner diameter using an inside micrometer.

Standard : 43.000 - 43.013 mm (1.6929 - 1.6934 in) dia.

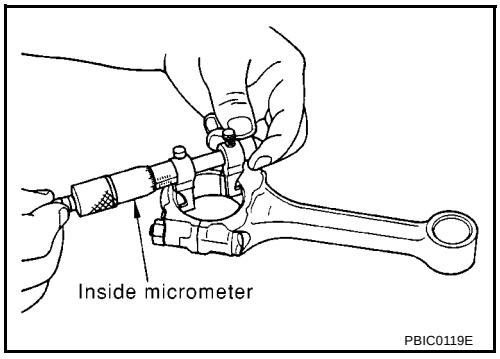

CONNECTING ROD BUSHING OIL CLEARANCE (SMALL END)

Inner Diameter of Connecting Rod (Small End)

- Measure inner diameter of bushing.

Standard : 19.000 - 19.012 mm (0.7480 - 0.7485 in) dia.

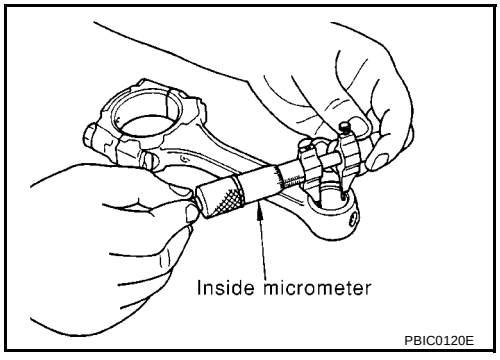

Outer Diameter of Piston Pin

- Measure outer diameter of piston pin.

  Standard : 18.989 - 19.001 mm (0.7476 - 0.7481 in)

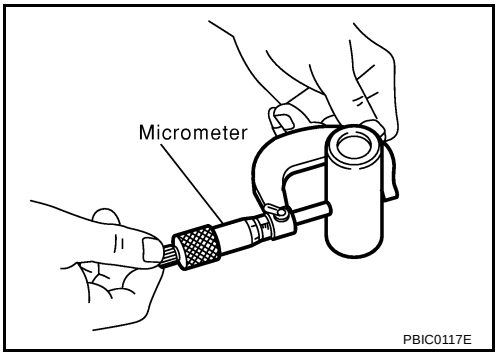

Connecting Rod Bushing Oil Clearance (Small End)

(Connecting rod small end oil clearance) = (Inner diameter of connecting rod small end) – (Outer diameter of piston pin)

Standard : 0.005 - 0.017 mm (0.0002 - 0.0007 in)

- If the measured value exceeds the standard, replace the connecting rod assembly and/or piston and piston pin assembly.
- If replacing the piston and piston pin assembly, refer to the “Piston Selection Table” to select the piston corresponding to the applicable bore grade of the cylinder block to be used. Refer to EM-84, "HOW TO SELECT PISTON" .

Factory installed parts grading:

- Service parts apply only to grade 0.

Unit: mm (in)

Grade	0	1
Connecting rod small end inner diameter	19.000 - 19.006 (0.7480 - 0.7483)	19.006 - 19.012 (0.7483 - 0.7485)
Piston pin outer diameter	18.989 - 18.995 (0.7476 - 0.7478)	18.995 - 19.001 (0.7478 - 0.7481)
Piston pin hole diameter	18.993 - 18.996 (0.7478- 0.7479)	18.996 - 18.999 (0.7479 - 0.7480)

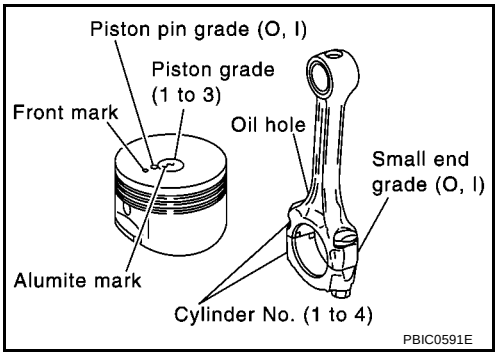

CYLINDER BLOCK DISTORTION

- Using a scraper, remove gasket on the cylinder block surface, and also remove oil, scale, carbon, or other contamination.

  CAUTION:
  Be careful not to allow gasket flakes to enter the oil or coolant passages.
- Measure the distortion on the block upper face at some different points in 6 directions.

  Limit : 0.1 mm (0.004 in)
- If out of the distortion limit, replace the cylinder block.

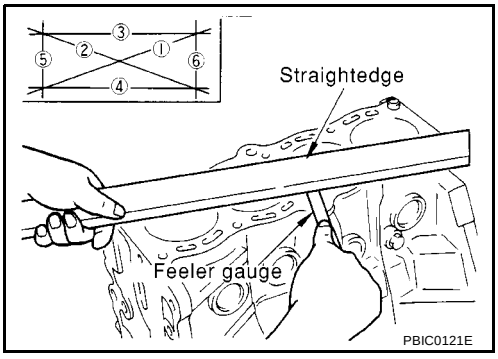

INNER DIAMETER OF MAIN BEARING HOUSING

- Install the main bearing caps with the main bearings removed, and tighten the mounting bolts to the specified torque.
- Using a bore gauge, measure the inner diameter of the main bearing housing.

  Standard : 53.644 - 53.668 mm (2.1120 - 2.1129 in) dia.

- If out of the standard, replace the cylinder block and lower cylinder block assembly.

  NOTE:
  These components cannot be replaced as a single unit because they were processed together.

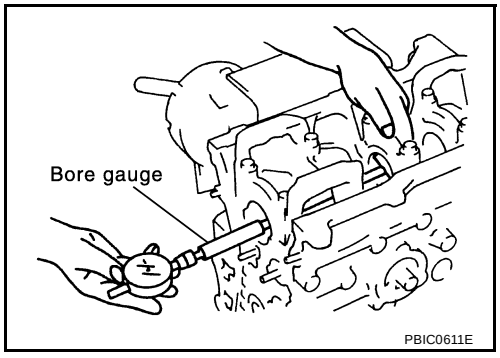

PISTON TO CYLINDER BORE CLEARANCE

Inner Diameter of Cylinder Bore

- Using a bore gauge, measure cylinder bore for wear, out-of-round and taper at 6 different points on each cylinder. (X and Y directions at A, B and C) (Y is in longitudinal direction of engine)

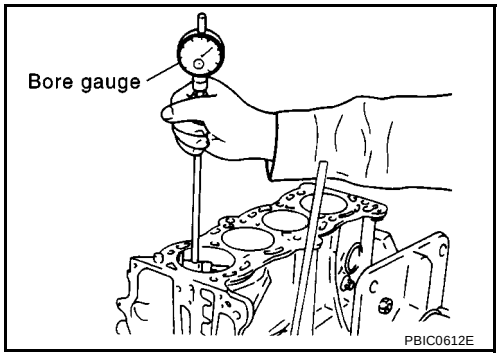

Standard inner diameter:

80.000 - 80.030 mm (3.1496 - 3.1508 in) dia.

Wear limit:

0.2 mm (0.008 in)

Out-of-round (Difference between X and Y):

0.015 mm (0.0006 in)

Taper limit (Difference between A and C):

0.01 mm (0.0004 in)

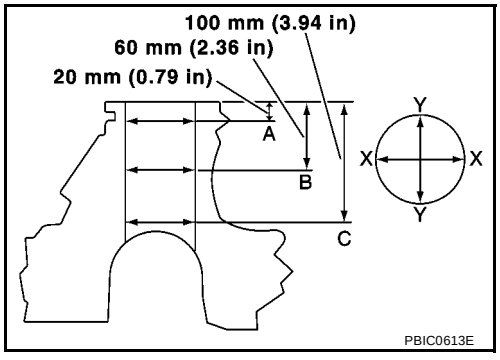

- If the measured value exceeds the limit, or if there are scratches and/or seizure on the cylinder inner wall, hone or rebore the inner wall.
- An oversize piston is provided. When using an oversize piston, rebore the cylinder so that the clearance of the piston cylinder satisfies the standard.

Oversize (OS) : 0.25 mm (0.0098 in)
: 0.5 mm (0.0197 in)

Outer Diameter of Piston

- Measure piston skirt diameter.

Measuring point	**: 42.3 mm (1.665 in) below piston head upper edge**
Standard	**: 79.965 - 79.995 mm (3.1482 - 3.1494 in) dia.**

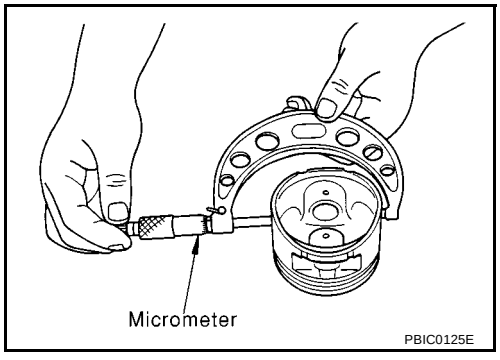

Piston to Cylinder Bore Clearance

- Calculate by outer diameter of piston skirt and inner diameter of cylinder (direction X, position B).

(Clearance) = (Inner diameter of cylinder) – (Outer diameter of piston skirt).

Standard : 0.025 - 0.045 mm (0.010 - 0.018 in)

- If it exceeds the standard, replace piston/piston pin assembly.

Reboring Cylinder Bore

1. Cylinder bore size is determined by adding piston-to-bore clearance to piston diameter “A”.

   Rebored size calculation: D = A + B - C
   where,
   D: Bored diameter
   A: Piston diameter as measured
   B: Piston - to - bore clearance (standard value)
   C: Honing allowance 0.02 mm (0.0008 in)

2. Install main bearing caps, and tighten to the specified torque. Otherwise, cylinder bores may be distorted in final assembly.
3. Cut cylinder bores.

- **When any cylinder needs boring, all other cylinders must also be bored.**
- **Do not cut too much out of cylinder bore at a time. Cut only 0.05 mm (0.0020 in) or so in diameter at a time.**

4. Hone cylinders to obtain specified piston-to-bore clearance.
5. Measure finished cylinder bore for out-of-round and taper.

- **Measurement should be done after cylinder bore cools down.**

OUTER DIAMETER OF CRANKSHAFT JOURNAL

- Measure outer diameter of crankshaft journals.

Standard : 49.940 - 49.964 mm (1.9661 - 1.9671 in) dia.

OUTER DIAMETER OF CRANKSHAFT PIN

- Measure outer diameter of crankshaft pin.

Standard : 39.956 - 39.974 mm (1.5731 - 1.5738 in) dia.

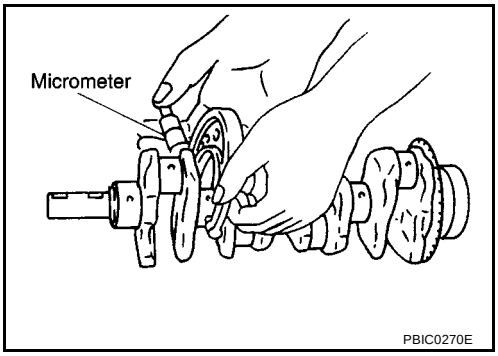

OUT-OF-ROUND AND TAPER OF CRANKSHAFT

- Using a micrometer, measure the dimensions at 4 different points shown in the figure on each journal and pin.
- Out-of-round is indicated by the difference in dimensions between A and B at 1 and 2.
- Taper is indicated by the difference in dimension between 1 and 2 at A and B.

Limit:
Out-of-round (A – B) : 0.005 mm (0.0002 in)
Taper (1 – 2) : 0.005 mm (0.0002 in)

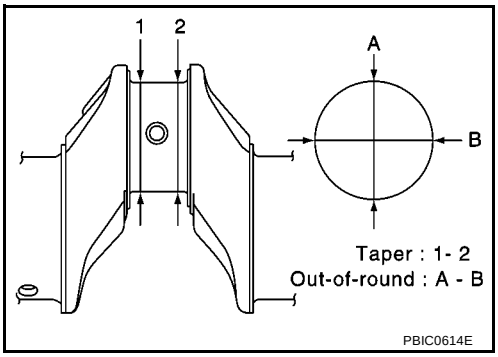

CRANKSHAFT RUNOUT

- Place a V-block on a precise flat table to support the journals on the both end of the crankshaft.
- Place a dial gauge straight up on the No. 3 journal.
- While rotating the crankshaft, read the movement of the pointer on the dial gauge. (Total indicator reading)

Limit: : 0.05 mm (0.002 in)

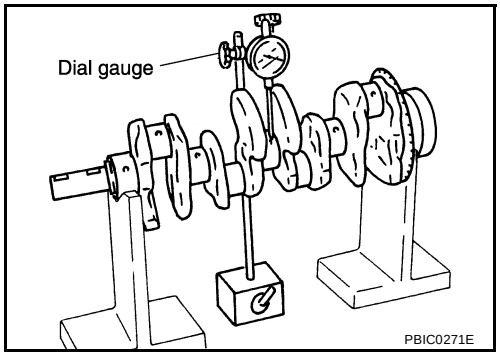

OIL CLEARANCE OF CONNECTING ROD BEARING

Method of Measurement

- Install the connecting rod bearings to the connecting rod and the cap, and tighten the connecting rod bolts to the specified torque. Using a inside micrometer measure the inner diameter of connecting rod bearing.

(Oil clearance) = (Inner diameter of connecting rod bearing) – (Outer diameter of crankshaft pin)

Standard : 0.014 - 0.039 mm (0.0006 - 0.0015 in)

Limit : 0.1 mm (0.004 in)

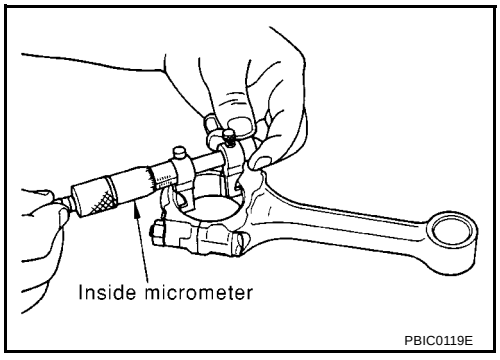

- If clearance cannot be adjusted within the standard, grind crankshaft pin and use undersized bearing. Refer to EM-85, "HOW TO SELECT CONNECTING ROD BEARING" .

Method of Using Plastigage

- Remove oil and dust on the crankshaft pin and the surfaces of each bearing completely.
- Cut a plastigage slightly shorter than the bearing width, and place it in crankshaft axial direction, avoiding oil holes.
- Install the connecting rod bearings to the connecting rod cap, and tighten the connecting rod bolts to the specified torque.

  CAUTION:
  Never rotate the crankshaft.
- Remove the connecting rod cap and bearings, and using the scale on the plastigage bag, measure the plastigage width.

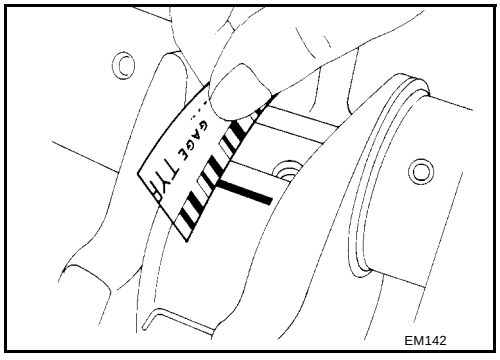

NOTE:
The procedure when the measured value exceeds the limit is same as that described in the method by calculation.

OIL CLEARANCE OF MAIN BEARING

Method of Measurement

- Install the main bearings to the cylinder block and bearing cap. Measure the main bearing inner diameter with the bearing cap bolt tightened to the specified torque.

(Oil clearance) = (Inner diameter of main bearing) – (Outer diameter of crankshaft journal)

Standard : 0.020 - 0.044 mm (0.0008 - 0.0017 in)

Limit : 0.1 mm (0.004 in)

- If the measured value exceeds the limit, select main bearings referring to the main bearing inner diameter and crankshaft journal outer diameter, so that the oil clearance satisfies the standard. Refer to EM-86, "HOW TO SELECT MAIN BEARING" .

Method of Using Plastigage

- Remove oil and dust on the crankshaft journal and the surfaces of each bearing completely.
- Cut a plastigage slightly shorter than the bearing width, and place it in crankshaft axial direction, avoiding oil holes.
- Tighten the main bearing bolts to the specified torque.

  CAUTION:
  Never rotate the crankshaft.
- Remove the bearing cap and bearings, and using the scale on the plastigage bag, measure the plastigage width.

  NOTE:
  The procedure when the measured value exceeds the limit is same as that described in “the method by calculation.”

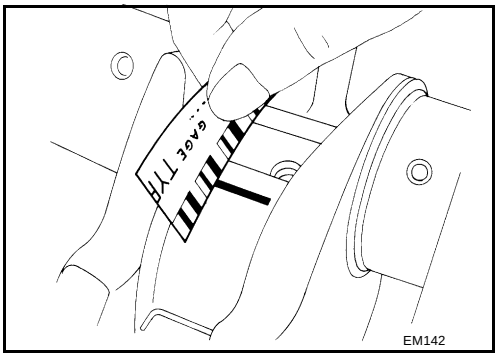

CRUSH HEIGHT OF MAIN BEARING

- When the bearing cap is removed after being tightened to the specified torque with main bearings installed, the tip end of bearing must protrude.

  Standard : There must be crush height
- If the standard is not met, replace main bearings.

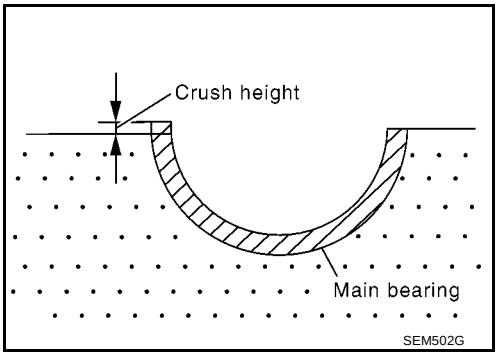

FLYWHEEL RUNOUT

- Measure deflection of contact surface with dial gauge.

  Flywheel (M/T models)
  Limit : 0.1 mm (0.004 in)

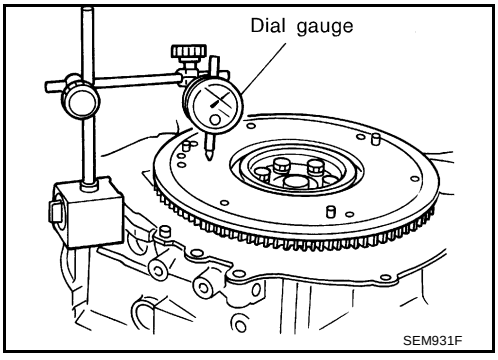

SERVICE DATA AND SPECIFICATIONS (SDS)

PFP:00030

Standard and Limit

EBS00QEV

GENERAL SPECIFICATIONS

Classification		Gasoline
Cylinder arrangement		4, in-line
Displacement cm^3 (cu in)		1,769 (107.94)
Bore and stroke mm (in)		80.0 x 88.0 (3.150 x 3.465)
Valve arrangement		DOHC
Firing order		1-3-4-2
Number of piston rings	Compression	2
	Oil	1
Number of main bearings		5
Compression ratio		9.5
Compression pressure kPa (bar, kg/cm^2 , psi) / 350 rpm	Standard	1,324 (13.24, 135, 192)
	Minimum	1,128 (11.28, 11.5, 164)
	Differential limit between cylinders	98 (0.98, 1.0, 14)
Valve timing (Intake valve timing control - OFF)	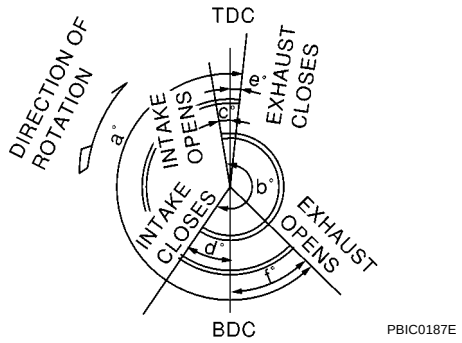	

Unit: degree

a	b	c	d	e	f
208	228	–8	56	–2	30

INTAKE MANIFOLD AND EXHAUST MANIFOLD

Unit: mm (in)

		Limit
Surface distortion	Intake manifold	0.1 (0.004)
	Exhaust manifold	0.3 (0.012)

DRIVE BELTS

Unit: mm (in)

		Deflection adjustment		
		Used belt		New belt
		Limit	After adjustment	
Alternator	Without air conditioner compressor	10.2 (0.402)	6.5 - 7.0 (0.256 - 0.276)	5.5 - 6.1 (0.217 - 0.240)
	With air conditioner compressor	8.1 (0.319)	5.3 - 5.7 (0.209 - 0.224)	4.5 - 5.0 (0.177 - 0.197)
Power steering oil pump		7.1 (0.280)	4.4 - 4.9 (0.173 - 0.193)	3.9 - 4.4 (0.154 - 0.173)
Applied pushing force		98 N (10 kg, 22 lb)		

SPARK PLUG

Make		NGK	Champion
Type	Standard	LFR5A-11	REC10YC4
	Hot	LFR4A-11	—
	Cold	LFR6A-11	—
Plug gap		1.0 - 1.1 mm (0.039 - 0.043 in)	

CYLINDER HEAD

Unit: mm (in)

	Standard	Limit
Head surface distortion	Less than 0.03 (0.0012)	0.1 (0.004)
Height	117.9 (4.642)	—

VALVE

Valve Dimensions

Unit: mm (in)

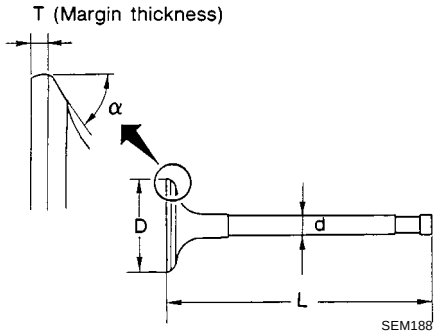

Valve head diameter “D”	Intake	29.9 - 30.2 (1.177 - 1.189)
	Exhaust	24.9 - 25.2 (0.980 - 0.992)
Valve length “L”	Intake	92.00 - 92.50 (3.6220 - 3.6417)
	Exhaust	92.37 - 92.87 (3.6366 - 3.6563)
Valve stem diameter “d”	Intake	5.465 - 5.480 (0.2152 - 0.2157)
	Exhaust	5.445 - 5.460 (0.2144 - 0.2150)
Valve seat angle “α”		44°15′ - 44°45′
Valve margin “T”		0.8 - 0.14 (0.031 - 0.055)
Valve margin “T” limit		More than 0.5 (0.020)
Valve stem end surface grinding limit		0.2 (0.008)

Valve Clearance

Shim Type

Unit: mm (in)

	For adjusting		For checking
	Hot	Cold* (reference data)	Hot
Intake	0.304 - 0.416 (0.012 - 0.016)	0.25 - 0.33 (0.010 - 0.013)	0.21 - 0.47 (0.008 - 0.019)
Exhaust	0.348 - 0.472 (0.014 - 0.019)	0.32 - 0.40 (0.013 - 0.016)	0.30 - 0.56 (0.012 - 0.022)

*: At a temperature of approximately 20°C (68°F)

Shimless Type

	Hot	Cold* (reference data)
Intake	0.32 - 0.40 (0.013 - 0.016)	0.24 - 0.32 (0.009 - 0.013)
Exhaust	0.33 - 0.41 (0.013 - 0.016)	0.26 - 0.34 (0.010 - 0.013)

*: At a temperature of approximately 20°C (68°F)

Available Shims

Thickness mm (in)	Identification mark
2.00 (0.0787)	200
2.02 (0.0795)	202
2.04 (0.0803)	204
2.06 (0.0811)	206
2.08 (0.0819)	208
2.10 (0.0827)	210
2.12 (0.0835)	212
2.14 (0.0843)	214
2.16 (0.0850)	216
2.18 (0.0858)	218
2.20 (0.0866)	220
2.21 (0.0870)	221
2.22 (0.0874)	222
2.23 (0.0878)	223
2.24 (0.0882)	224
2.25 (0.0886)	225
2.26 (0.0890)	226
2.27 (0.0894)	227
2.28 (0.0898)	228
2.29 (0.0902)	229
2.30 (0.0906)	230
2.31 (0.0909)	231
2.32 (0.0913)	232
2.33 (0.0917)	233
2.34 (0.0921)	234
2.35 (0.0925)	235
2.36 (0.0929)	236
2.37 (0.0933)	237
2.38 (0.0937)	238
2.39 (0.0941)	239
2.40 (0.0945)	240
2.41 (0.0949)	241
2.42 (0.0953)	242
2.43 (0.0957)	243
2.44 (0.0961)	244
2.45 (0.0965)	245
2.46 (0.0969)	246
2.47 (0.0972)	247
2.48 (0.0976)	248
2.49 (0.0980)	249
2.50 (0.0984)	250
2.51 (0.0988)	251

Thickness mm (in)	Identification mark
2.52 (0.0992)	252
2.53 (0.0996)	253
2.54 (0.1000)	254
2.55 (0.1004)	255
2.56 (0.1008)	256
2.57 (0.1012)	257
2.58 (0.1016)	258
2.59 (0.1020)	259
2.60 (0.1024)	260
2.61 (0.1028)	261
2.62 (0.1031)	262
2.63 (0.1035)	263
2.64 (0.1039)	264
2.65 (0.1043)	265
2.66 (0.1047)	266
2.68 (0.1055)	268
2.70 (0.1063)	270
2.72 (0.1071)	272
2.74 (0.1079)	274
2.76 (0.1087)	276
2.78 (0.1094)	278
2.80 (0.1102)	280
2.82 (0.1110)	282
2.84 (0.1118)	284
2.86 (0.1126)	286
2.88 (0.1134)	288
2.90 (0.1142)	290
2.92 (0.1150)	292
2.94 (0.1157)	294
2.96 (0.1165)	296
2.98 (0.1173)	298

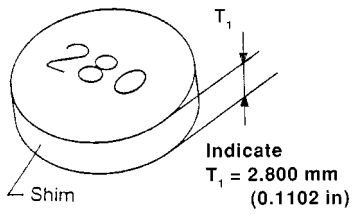

AEM236

Valve Spring

Free height	mm (in)	40.0 (1.57)
Pressure N (kg, lb) at height	mm (in)	147.5 - 166.3 (15.04 - 16.96, 33.2 - 37.4) at 23.64 (0.9307)
Out-of-square	mm (in)	Less than 1.80 (0.0709)

Valve Lifter

Unit: mm (in)

	Standard
Valve lifter outer diameter	29.960 - 29.975 (1.1795 - 1.1801)
Lifter guide inner diameter	30.000 - 30.021 (1.1811 - 1.1819)
Clearance between lifter and lifter guide	0.025 - 0.061 (0.0010 - 0.0024)

Available Valve Lifter (Shimless Type)

Thickness mm (in)	Identification Mark
3.000 (0.1181 in)	00
3.020 (0.1189 in)	02
3.040 (0.1197 in)	04
3.060 (0.1205 in)	06
3.080 (0.1213 in)	08
3.100 (0.1220 in)	10
3.120 (0.1228 in)	12
3.140 (0.1236 in)	14
3.160 (0.1244 in)	16
3.180 (0.1252 in)	18
3.200 (0.1260 in)	20
3.220 (0.1268 in)	22
3.240 (0.1276 in)	24
3.260 (0.1283 in)	26
3.280 (0.1291 in)	28
3.300 (0.1299 in)	30
3.320 (0.1307 in)	32
3.340 (0.1315 in)	34
3.360 (0.1323 in)	36
3.380 (0.1323 in)	38
3.400 (0.1339 in)	40
3.420 (0.1346 in)	42
3.440 (0.1354 in)	44
3.460 (0.1362 in)	46
3.480 (0.1370 in)	48
3.500 (0.1378 in)	50
3.520 (0.1386 in)	52
3.540 (0.1394 in)	54
3.560 (0.1402 in)	56
3.580 (0.1409 in)	58
3.600 (0.1417 in)	60
3.620 (0.1425 in)	62
3.640 (0.1433 in)	64
3.660 (0.1441 in)	66
3.680 (0.1449 in)	68

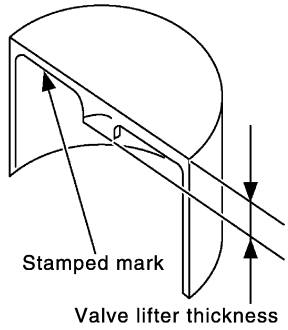

PBIC1077E

Valve Guide

Unit: mm (in)

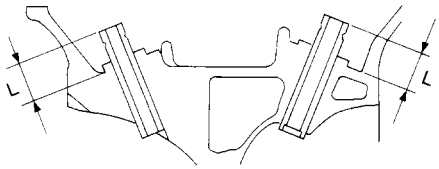

MEM096A

		Intake		Exhaust	
		Standard	Service	Standard	Service
Valve guide	Outer diameter	9.523 - 9.534 (0.3749 - 0.3754)	9.723 - 9.734 (0.3828 - 0.3832)	9.523 - 9.534 (0.3749 - 0.3754)	9.723 - 9.734 (0.3828 - 0.3832)
	Inner diameter (Finished size)	5.500 - 5.515 (0.2165 - 0.2171)		5.500 - 5.515 (0.2165 - 0.2171)	
Cylinder head valve guide hole diameter		9.475 - 9.496 (0.3730 - 0.3739)	9.685 - 9.696 (0.3813 - 0.3817)	9.475 - 9.496 (0.3730 - 0.3739)	9.685 - 9.696 (0.3813 - 0.3817)
Interference fit of valve guide		0.027 - 0.059 (0.0011 - 0.0023)	0.027- 0.049 (0.0011 - 0.0019)	0.027 - 0.059 (0.0011 - 0.0023)	0.027- 0.049 (0.0011 - 0.0019)
Stem to guide clearance		0.020 - 0.050 (0.0008 - 0.0020)		0.040 - 0.070 (0.0016 - 0.0028)	
Valve deflection limit (Dial gauge reading)		0.2 (0.008)			
Projection length “L”		11.5 - 11.7 (0.453 - 0.461)			

Valve Seat

Unit: mm (in)

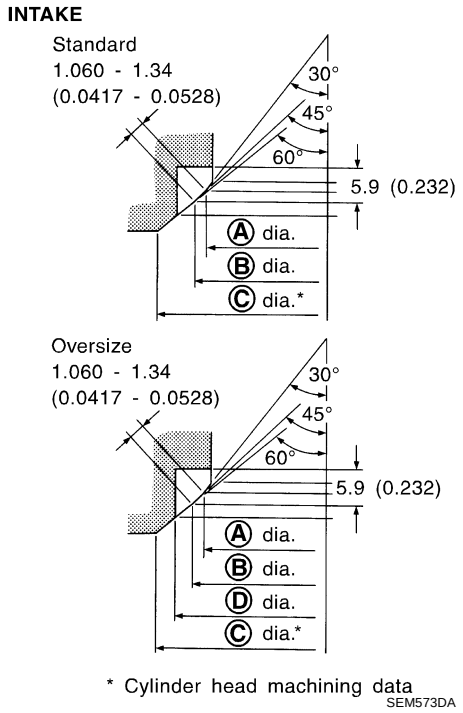

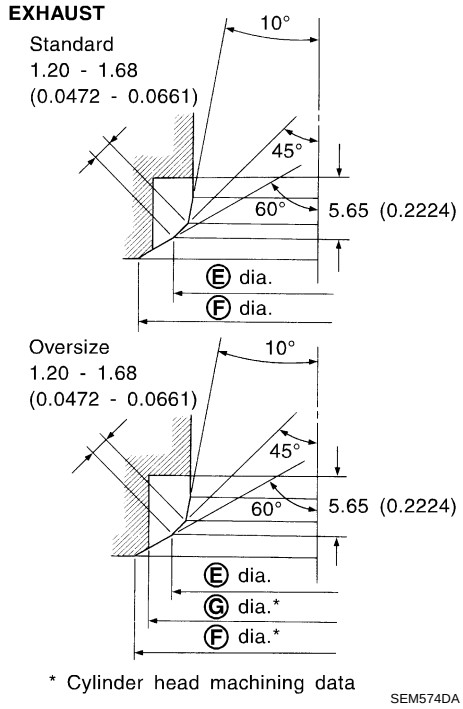

Dia	A	27.8 - 28.0 (1.094 - 1.102)
	B	29.5 - 29.7 (1.161 - 1.169)
	C	31.9 - 32.1 (1.256 - 1.264)
	D	31.500 - 31.516 (1.2402 - 1.2408)
	E	24.5 - 24.7 (0.9646 - 0.9724)
	F	26.500 - 26.516 (1.043 - 1.0439)
	G	26.2 - 26.4 (1.031 - 1.039)

CAMSHAFT AND CAMSHAFT BEARING

Unit: mm (in)

	Standard
Camshaft runout [TIR*]	Less than 0.02 (0.0008)

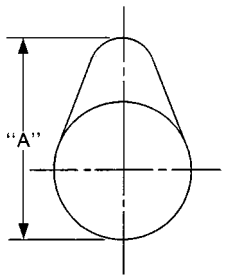

SEM671

Cam height "A"	Intake	40.217 - 40.407 (1.5833 - 1.5908)
	Exhaust	39.205 - 39.395 (1.5435 - 1.5510)
Outer diameter of camshaft journal		No. 1 27.935 - 27.955 (1.0998 - 1.1006) No. 2, 3, 4, 5 23.935 - 23.955 (0.9423 - 0.9431)

		Standard
Inner diameter of camshaft bracket		No .1 28.000 - 28.021 (1.1024 - 1.1032) No.2, 3, 4, 5 24.000 - 24.021 (0.9449 - 0.9457)
Camshaft journal clearance		0.045 - 0.086 (0.0018 - 0.0034)
Camshaft end play	Intake	0.070 - 0.143 (0.0028 - 0.0056)
	Exhaust	0.115 - 0.188 (0.0045 - 0.0074)

*: Total indicator reading

CYLINDER BLOCK

Unit: mm (in)

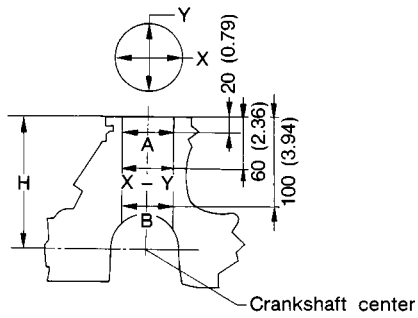

SEM171D

			Standard	Limit
Surface flatness			Less than 0.03 (0.0012)	0.1 (0.004)
Height “H” (nominal)			213.95 - 214.05 (8.4232 - 8.4271)	—
Cylinder bore inner diameter	Standard	Grade No. 1	80.000 - 80.010 (3.1496 - 3.1500)	0.2 (0.008)
		Grade No. 2	80.010 - 80.020 (3.1500 - 3.1504)	
		Grade No. 3	80.020 - 80.030 (3.1504 - 3.1508)	
Out-of-round (X – Y)			Less than 0.015 (0.0006)	—
Taper (A – B)			Less than 0.01 (0.0004)	—
Difference in inner diameter between cylinders			0.05 (0.0020)	0.2 (0.008)

PISTON, PISTON RING AND PISTON PIN

Available Piston

Unit: mm (in)

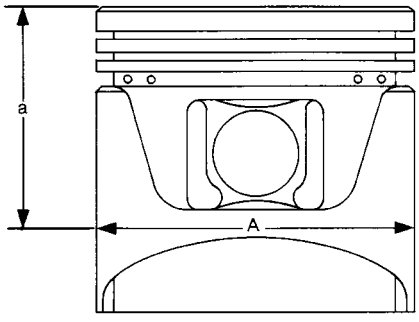

SEM882E

	Standard

Piston skirt diameter “A”	Standard	Grade No. 1	79.965 - 79.975 (3.1482 - 3.1486)
		Grade No. 2	79.975 - 79.985 (3.1486 - 3.1490)
		Grade No. 3	79.985 - 79.995 (3.1490 - 3.1494)
0.5 (0.002) oversize (service)			80.215 - 80.245 (3.1581 - 3.1592)
1.0 (0.039) oversize (service)			80.465 - 80.495 (3.1679 - 3.1691)
“a” dimension			42.3 (1.665)
Piston pin hole inner diameter			18.993 - 18.999 (0.7478 - 0.7480)
Piston to bore clearance			0.025 - 0.045 (0.0010 - 0.0018)

Piston Ring

Unit: mm (in)

		Standard	Limit
Side clearance	Top	0.040 - 0.080 (0.0016 - 0.0031)	0.110 (0.0043)
	2nd	0.030 - 0.070 (0.0012 - 0.0028)	0.100 (0.0039)
	Oil ring	0.045 - 0.155 (0.0018 - 0.0061)	—
End gap	Top	0.20 - 0.39 (0.0079 - 0.0154)	0.54 (0.0213)
	2nd	0.32 - 0.56 (0.0126 - 0.0220)	0.67 (0.0264)
	Oil (rail ring)	0.20 - 0.69 (0.0079 - 0.0272)	0.95 (0.0374)

Piston Pin

Unit: mm (in)

Piston pin outer diameter		18.989 - 19.001 (0.7476 - 0.7481)
Piston pin to piston clearance		0.002 - 0.006 (0.0001 - 0.0002)
Piston pin to connecting rod bushing clearance	Standard	0.005 - 0.017 (0.0002 - 0.0007)
	Limit	0.023 (0.0009)

CONNECTING ROD

Unit: mm (in)

Center distance		140.45 - 140.55 (5.5295 - 5.5335)
Bend [per 100 (3.94)]	Limit	0.15 (0.0059)
Torsion [per 100 (3.94)]	Limit	0.30 (0.0118)
Connecting rod bushing inner diameter* (small end)		19.000 - 19.012 (0.7480 - 0.7485)
Connecting rod big end inner diameter		43.000 - 43.013 (1.6929 - 1.6934)
Side clearance	Standard	0.20 - 0.470 (0.0079 - 0.0185)
	Limit	0.50 (0.0197)

*: After installing in connecting rod

CRANKSHAFT

Unit: mm (in)

Main journal dia. “Dm”	Grade No. 0	49.956 - 49.964 (1.9668 - 1.9671)
	Grade No. 1	49.948 - 49.956 (1.9665 - 1.9668)
	Grade No. 2	49.940 - 49.948 (1.9661 - 1.9665)

Pin journal dia. “Dp”	Grade No. 0	39.968 - 39.974 (1.5735 - 1.5738)
	Grade No. 1	39.962 - 39.968 (1.5733 - 1.5735)
	Grade No. 2	39.956 - 39.962 (1.5731 - 1.5733)
Out-of-round (X – Y)	Standard	Less than 0.003 (0.0001)
	Limit	Less than 0.005 (0.0002)
Taper (A – B)	Standard	Less than 0.004 (0.0002)
	Limit	Less than 0.005 (0.0002)
Runout [TIR*]	Standard	Less than 0.04 (0.0016)
	Limit	Less than 0.05 (0.002)
Free end play	Standard	0.060 - 0.260 (0.0024 - 0.0102)
	Limit	0.3 (0.012)

*: Total indicator reading

MAIN BEARING

Standard size

Unit: mm (in)

Grade No.	Thickness	Identification color
0	1.826 - 1.830 (0.0719 - 0.0720)	Black
1	1.830 - 1.834 (0.0720 - 0.0722)	Red
2	1.834 - 1.838 (0.0722 - 0.0724)	Green
3	1.838 - 1.842 (0.0724 - 0.0725)	Yellow
4	1.842 - 1.846 (0.0725 - 0.0727)	Blue

Undersize

Unit: mm (in)

	Thickness
0.25 (0.0098)	1.960 - 1.964 (0.0772 - 0.0773)
0.50 (0.0197)	2.085 - 2.089 (0.0821 - 0.0822)

Bearing Clearance

Unit: mm (in)

Main bearing clearance	Standard	0.020 - 0.044 (0.0008 - 0.0017)
	Limit	0.1 (0.004)

CONNECTING ROD BEARING

Standard Size

Unit: mm (in)

Grade No.	Thickness	Identification color or number
0	1.503 - 1.506 (0.0592 - 0.0593)	Black
1	1.506 - 1.509 (0.0593 - 0.0594)	Red
2	1.509 - 1.512 (0.0594 - 0.0595)	Green

Undersize

Unit: mm (in)

Grade No.	Thickness	Identification color or number
0.08 (0.0031)	1.542 - 1.546 (0.0607 - 0.0609)	—
0.12 (0.0047)	1.562 - 1.566 (0.0615 - 0.0617)	—
0.25 (0.0098)	1.627 - 1.631 (0.0641 - 0.0642)	—

Bearing Clearance

Unit: mm (in)

Connecting rod bearing clearance	Standard	0.014 - 0.039 (0.0006 - 0.0015)
	Limit	0.1 (0.004)

MISCELLANEOUS COMPONENTS

Unit: mm (in)

Flywheel runout [TIR*]		Less than 0.1 (0.004)
Camshaft sprocket runout [TIR*]	Intake	Less than 0.2 (0.008)
	Exhaust	Less than 0.15 (0.0059)

*: Total indicator reading

Tightening Torque

EBS00QEW

*1: Parts to be tightened in particular orders.
1)-: Order of tightening when tightening two or more times separately.

Unit: N·m (kg-m, ft-lb)
Unit: N·m (kg-m, in-lb)*2

	Mass air flow sensor		8.4 - 10.8 (0.9 - 1.1, 75 - 95)*2
	Resonator		3.8 - 4.5 (0.39 - 0.45, 34 - 39)*2
	Air cleaner case lower		3.8 - 4.5 (0.39 - 0.46, 34 - 39)*2
	Intake manifold		16.7 - 23.5 (1.7 - 2.4, 13 - 17)
	Intake manifold collector		7.0 - 9.5 (0.71 - 0.97, 62 - 84)*2
	Intake manifold support		16.7 - 23.5 (1.7 - 2.4, 13 - 17)
	Electric throttle control actuator		17.7 - 21.6 (1.8 - 2.2, 13 - 15)
	Exhaust manifold		25.5 - 29.4 (2.6 - 2.9, 19 - 21)
	Exhaust manifold cover		6.3 - 8.3 (0.64 - 0.85, 56 - 73)*2
	Heated oxygen sensor		58.8 - 78.4 (6.0 - 7.9, 44 - 57)
	Ground nut		79.4 (8.1, 59)
	Oil pan		6.28 - 8.34 (0.64 - 0.85, 56 - 73)*2
	Oil pan drain plug		29.4 - 39.2 (3.0 - 3.9, 22 - 28)
	Oil strainer		6.28 - 8.34 (0.64 - 0.85, 56 - 73)*2
	Ignition coil		3.8 - 5.0 (0.38 - 0.51, 33 - 44)*2
	Spark plug		19.6 - 29.4 (2.0 - 3.0, 15 - 21)
*1	Fuel tube	1)	11.8 - 13.7 (1.2 - 1.4, 9 - 10)
		2)	16.7 - 23.5 (1.7 - 2.4, 12 - 17)
	Rocker cover		2.0 - 3.9 (0.20 - 0.40, 17.4 - 34.7)*2
	Intake valve timing control solenoid valve		6.3 - 8.3 (0.64 - 0.85, 56 - 73)*2
	Camshaft position sensor (PHASE)		7.2 - 10.8 (0.73 - 1.1, 64 - 95) *2
	Camshaft sprocket (INT)		78.4 - 88.2 (8.0 - 9.0, 58 - 65)
	Camshaft sprocket (EXH)		98.1 - 127.5 (10.0 - 13.0, 73 - 94)
*1	Camshaft bracket	1)	2.0 (0.2, 18) *2
		2)	5.9 (0.6, 52) *2
		3)	9.0 - 11.8 (0.92 - 1.20, 80 - 104)*2
	Crankshaft pulley		132.4 - 152.0 (14.0 - 15.0, 98 - 112)
	Front cover		6.92 - 9.5 (0.71 - 0.96, 62 - 84)*2
	Timing chain tension guide		15.7 - 20.6 (1.6 - 2.1, 12 - 15)

*1	Cylinder head	1)	29.4 (3.0, 22)
		2)	58.8 (6.0, 43)
		3)	0 (0.0, 0)
		4)	27.4 - 31.4 (2.8 - 3.2, 21 - 23)
		5)	50° - 55° (Angle tightening)
	Cylinder head front cover		7.0 - 9.5 (0.72 - 0.96, 62 - 84)*2
	Flywheel (M/T)		83.4 - 93.2 (8.5 - 9.5, 62 - 68)
	Drive plate (A/T)		93.2 - 103 (9.5 - 10.5, 69 - 75)
*1	Connecting rod bearing cap	1)	13.72 - 15.68 (1.4 - 1.5, 10.2 - 11.5)
		2)	35° - 40° (Angle tightening)
	Knock sensor		20.6 - 26.5 (2.1 - 2.7, 15 - 20)
	Crankshaft position sensor (POS)		7.2 - 10.8 (0.8 - 1.1, 64 - 95)*2
	Rear oil seal retainer		6.3 - 8.3 (0.65 - 0.84, 56 - 73)*2
	Signal plate		7.6 - 9.2 (0.78 - 0.93, 68 - 81)*2

PRECAUTIONS

PFP:00001

Precautions for Drain Coolant

EBS00QEX

- Drain coolant when engine is cooled.

Precautions for Disconnecting Fuel Piping

EBS00QEY

- Before starting work, make sure no fire or spark producing items are in the work area.
- Release fuel pressure before disassembly.
- After disconnecting pipes, plug openings to stop fuel leakage.

Precautions for Removal and Disassembly

EBS00QEZ

- When instructed to use special service tools, use the specified tools. Always be careful to work safely, avoid forceful or uninstructed operations.
- Exercise maximum care to avoid damage to mating or sliding surfaces.
- Cover openings of engine system with tape or the equivalent, if necessary, to seal out foreign materials.
- Mark and arrange disassembly parts in an organized way for easy troubleshooting and re-assembly.
- When loosening nuts and bolts, as a basic rule, start with the one furthest outside, then the one diagonally opposite, and so on. If the order of loosening is specified, do exactly as specified.

Precautions for Inspection, Repair and Replacement

EBS00QF0

- Before repairing or replacing, thoroughly inspect parts. Inspect new replacement parts in the same way, and replace if necessary.

Precautions for Assembly and Installation

EBS00QF1

- Use torque wrench to tighten bolts or nuts.
- When tightening nuts and bolts, as a basic rule, equally tighten in several different steps starting with the ones in center, then ones on inside and outside diagonally in this order. If the order of tightening is specified, do exactly as specified.
- Replace with new gasket, packing, oil seal or O-ring.
- Thoroughly wash, clean, and air-blow each part. Carefully check oil or coolant passages for any restriction and blockage.
- Avoid damaging sliding or mating surfaces. Completely remove foreign materials such as cloth lint or dust. Before assembly, oil sliding surfaces well.
- Release air within route after draining coolant.
- After repairing, start engine and increase engine speed to check coolant, fuel, oil, and exhaust systems for leakage.

Parts Requiring Angular Tightening

EBS00QF2

- Use an angle wrench for the final tightening of the following engine parts:
  - Cylinder head bolts
  - Main bearing cap bolts
  - Connecting rod cap nuts
  - Crankshaft pulley bolt (No angle wrench is required as the bolt flange is provided with notches for angular tightening)
- Do not use a torque value for final tightening.
- The torque value for these parts are for a preliminary step.
- Ensure thread and seat surfaces are clean and coated with engine oil.

Precautions for Liquid Gasket

EBS00QF3

REMOVAL OF LIQUID GASKET SEALING

- After removing the mounting bolts and nuts, separate the mating surface using a seal cutter and remove the liquid gasket.

CAUTION:

Be careful not to damage the mating surfaces.

- In areas where the cutter is difficult to use, use a plastic hammer to lightly tap the areas where the liquid gasket is applied.

CAUTION:

If for some unavoidable reason a tool such as a flat-bladed screwdriver is used, be careful not to damage the mating surfaces.

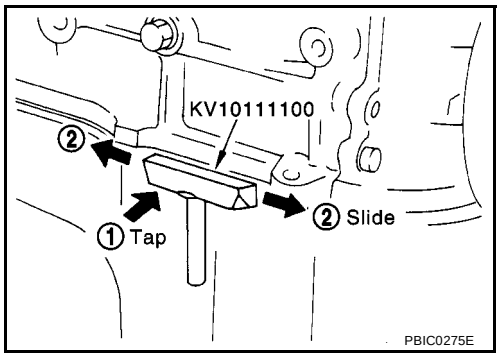

LIQUID GASKET APPLICATION PROCEDURE

1. Using a scraper, remove the old liquid gasket adhering to the gasket application surface and the mating surface.

- Remove the liquid gasket completely from the groove of the gasket application surface, mounting bolts, and bolt holes.

2. Wipe the gasket application surface and the mating surface with white gasoline (lighting and heating use) to remove adhering moisture, grease and foreign materials.
3. Attach the liquid gasket to the tube presser.
   Use Genuine Liquid Gasket or equivalent.

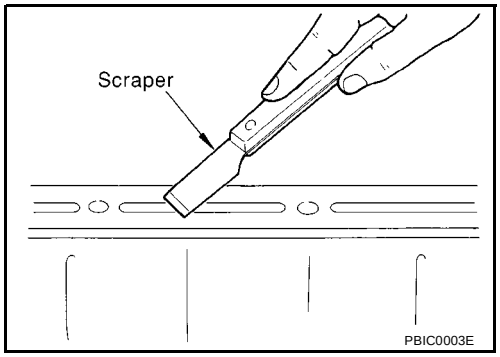

4. Apply the gasket without breaks to the specified location with the specified dimensions.

- If there is a groove for the liquid gasket application, apply the gasket to the groove.

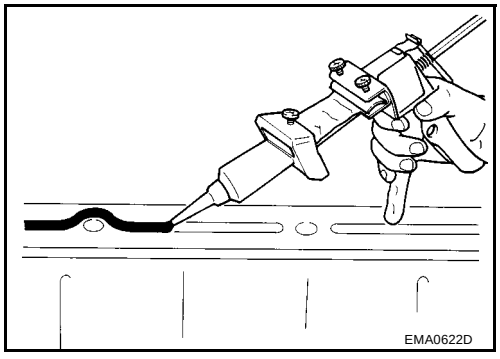

- As for the bolt holes, normally apply the gasket inside the holes. Occasionally, it should be applied outside the holes. Make sure to read this service manual.
- Within five minutes of gasket application, install the mating component.
- If the liquid gasket protrudes, wipe it off immediately.
- Do not retighten after the installation.
- After 30 minutes or more have passed from the installation, fill the engine oil and coolant.

CAUTION:

If there are specific instructions in this service manual, observe them.

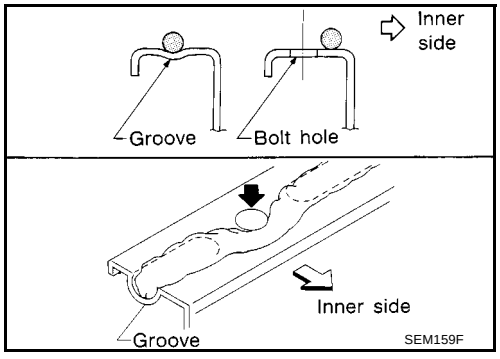

PREPARATION

PFP:00002

Special Service Tools

EBS00QF4

Tool number Tool name		Description
ST0501S000 Engine stand assembly 1 ST05011000 Engine stand 2 ST05012000 Base	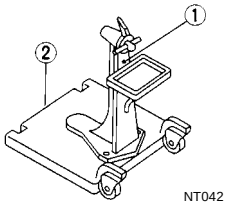	Disassembling and assembling
KV10106500 Engine stand shaft	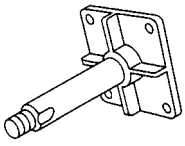	
KV11105900 Engine sub-attachment	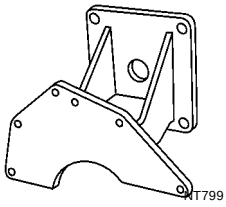	Used with KV10106500
KV10115600 Valve oil seal drift	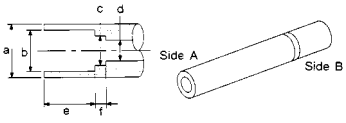	Installing valve oil seal **Use side A.** **Side A** **a: 20 (0.79) dia.** **b: 13 (0.51) dia.** **c: 10.3 (0.406) dia.** **d: 8 (0.31) dia.** **e: 10.7 (0.421)** **f: 5 (0.20)** Unit: mm (in)
KV10107902 Valve oil seal puller 1 KV10116100 Valve oil seal puller adapter	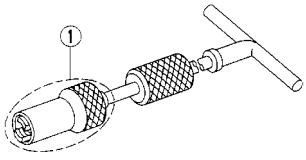	Removing valve oil seal
KV11103000 Injection pump drive gear puller	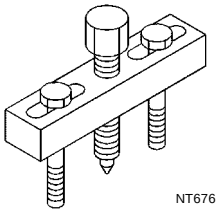	Removing crankshaft pulley

Tool number Tool name		Description
KV101056S0 Ring gear stopper 1 KV10105630 Adapter 2 KV10105610 Plate	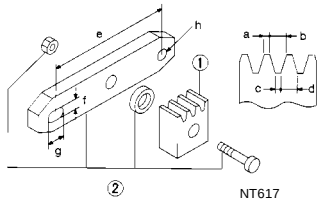	Preventing crankshaft from rotating **a: 3 (0.12)** **b: 6.4 (0.252)** **c: 2.8 (0.110)** **d: 6.6 (0.260)** **e: 107 (4.21)** **f: 14 (0.55)** **g: 20 (0.79)** **h: 14 (0.55) dia.** Unit: mm (in)
KV101151S0 Lifter stopper set 1 KV10115110 Camshaft pliers 2 KV10115120 Lifter stopper	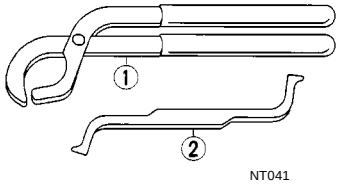	Changing valve lifter shims
ST16610001 Pilot bushing puller	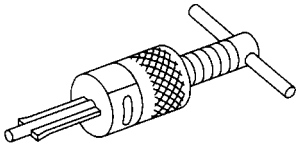	Removing crankshaft pilot bushing
KV10111100 Seal cutter	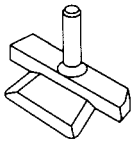	Removing steel oil pan and rear timing chain case
WS39930000 Tube presser	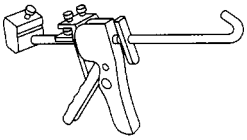	Pressing the tube of liquid gasket
KV10112100 Angle wrench	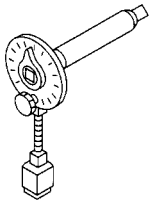	Tightening bolts for bearing cap, cylinder head, etc.
KV10109300 Pulley holder	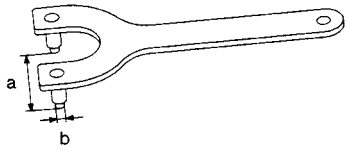	**a: 68 mm (2.68 in)** **b: 8 mm (0.31 in) dia.**

Tool number Tool name		Description
KV11106010 Hexagon wrench	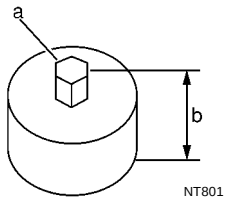	**a: 5 mm (0.20 in) (Face to face)** **b: 20 mm (0.79 in)**
KV11106020 Hexagon wrench	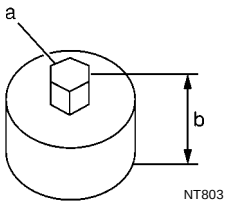	**a: 6 mm (0.24 in) (Face to face)** **b: 20 mm (0.79 in)**
KV11106030 Positioning stopper pin	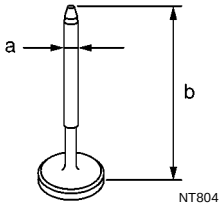	**a: 6 mm (0.24 in) dia.** **b: 80 mm (3.15 in)**
KV11106040 TORX wrench	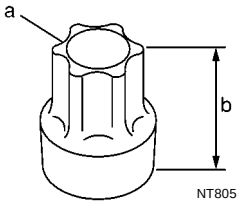	**a: T70** **b: 26 mm (1.02 in)**
KV11106050 Hexagonal wrench	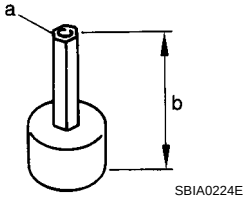	**a: 6 mm (0.24 in) (Face to face)** **b: 42 mm (1.65 in)** Removing and installing mounting bolts of fuel pump sprocket
KV11106060 Sprocket holder	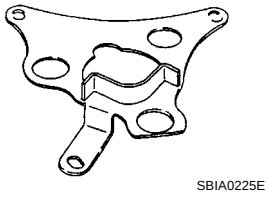	Holding fuel pump sprocket

Commercial Service Tools

EBS00QF5

Tool name	Description
Valve seat cutter set 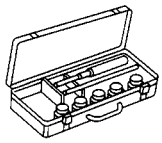 NT048	Finishing valve seat dimensions
Piston ring compressor 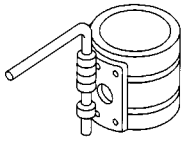 NT044	Installing piston assembly into cylinder bore
Piston ring expander 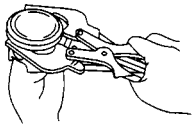 NT030	Removing and installing piston ring
TORX socket 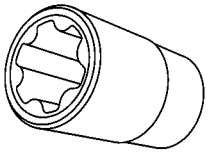 NT807	
Standard Universal 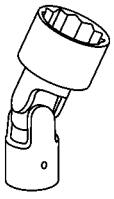 NT808	

NOISE, VIBRATION AND HARSHNESS (NVH) TROUBLESHOOTING

PFP:00003

NVH Troubleshooting —Engine Noise

EBS00QF6

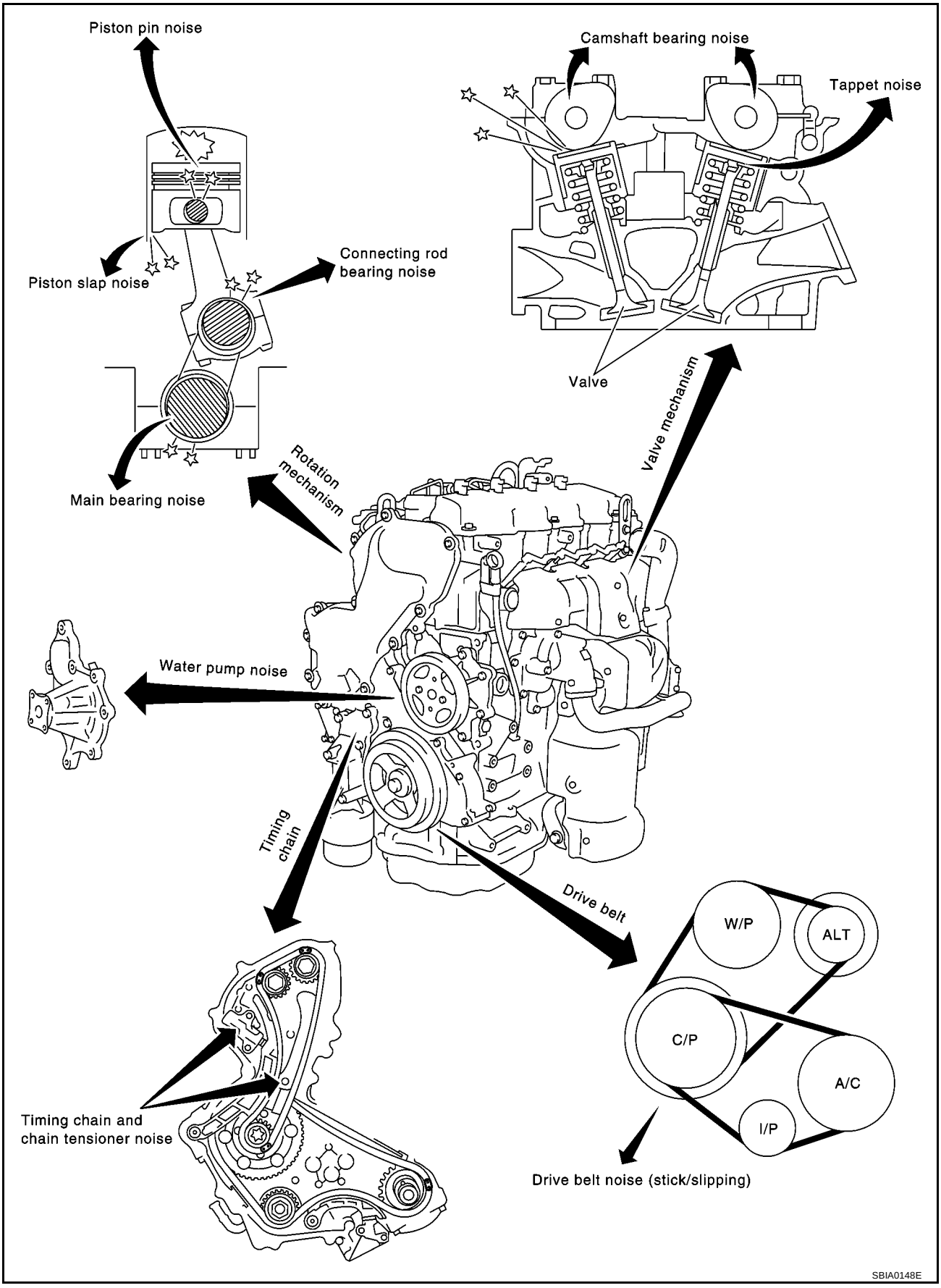

Use the Chart Below to Help You Find the Cause of the Symptom.

EBS00QF7

1. Locate the area where noise occurs.
2. Confirm the type of noise.
3. Specify the operating condition of engine.
4. Check specified noise source.

If necessary, repair or replace these parts.

Location of noise	Type of noise	Operating condition of engine						Source of noise	Check item	Reference page
		Before warm-up	After warm-up	When starting	When idling	When racing	While driving			
Top of engine Rocker cover Cylinder head	Ticking or clicking	C	A	—	A	B	—	Tappet noise	Valve clearance	EM-167
	Rattle	C	A	—	A	B	C	Camshaft bearing noise	Camshaft oil clearance Camshaft runout	EM-164 EM-163
Crankshaft pulley Cylinder block (Side of engine) Oil pan	Slap or knock	—	A	—	B	B	—	Piston pin noise	Piston to piston pin clearance Connecting rod bushing oil clearance (Small end)	EM-214 EM-216
	Slap or rap	A	—	—	B	B	A	Piston slap noise	Piston to cylinder bore clearance Piston ring side clearance Piston ring end gap Connecting rod bend and torsion	EM-217 EM-214 EM-215 EM-215
	Knock	A	B	C	B	B	B	Connecting rod bearing noise	Connecting rod bushing oil clearance (Small end) Connecting rod bearing oil clearance (Big end)	EM-216 EM-219
	Knock	A	B	—	A	B	C	Main bearing noise	Main bearing oil clearance Crankshaft runout	EM-220 EM-219
Front of engine Timing chain cover	Tapping or ticking	A	A	—	B	B	B	Timing chain and chain tensioner noise	Timing chain cracks and wear Timing chain tensioner operation	EM-171 EM-176
Front of engine	Squeaking or fizzing	A	B	—	B	—	C	Drive belts (Sticking or slipping)	Drive belts deflection	EM-117
	Creaking	A	B	A	B	A	B	Drive belts (Slipping)	Idler pulley bearing operation	
	Squall Creak	A	B	—	B	A	B	Water pump noise	Water pump operation	LC-35

A: Closely related B: Related C: Sometimes related —: Not related

DRIVE BELTS

PFP:02117

Checking Drive Belts

EBS00QF8

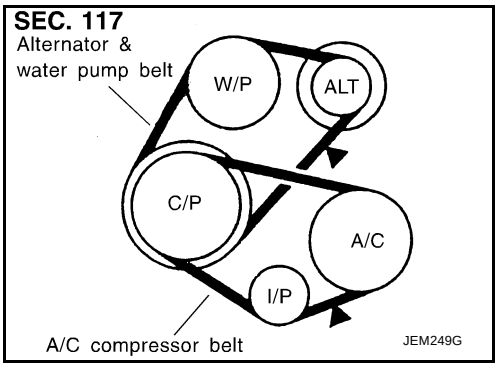

- Before inspecting the engine, make sure the engine has cooled down; wait approximately 30 minutes after the engine has been stopped.
- Visually inspect all belts for wear, damage or cracks on contacting surfaces and edge areas.
- When measuring deflection, apply 98 N (10 kg, 22 lb) at the marked point (▲).

  CAUTION:
  - **When checking belt deflection immediately after installation, first adjust it to the specified value. Then, after turning the crankshaft two turns or more, re-adjust to the specified value to avoid variation in deflection between pulleys.**
  - **Tighten idler pulley lock nut by hand and measure deflection without looseness.**

Belt Deflection:

Applied belt	Belt deflection with 98 N (10 kg, 22 lb) force applied* mm (in)		
	New	Adjusted	Limit for re-adjusting
Air conditioner compressor belt	4 - 5 (0.16 - 0.20)	6 - 7 (0.24 - 0.28)	8.5 (0.335)
Alternator and water pump belt	9.0 - 10.5 (0.354 - 0.413)	11.0 - 12.5 (0.433 - 0.492)	16.5 (0.650)

*: When engine is cold.

Tension Adjustment

EBS00QF9

- Adjust belts with the parts shown below.

Applied belt	Belt adjustment method
Air conditioner compressor belt	Adjusting bolt on idler pulley
Alternator water pump belt	Adjusting bolt on alternator

CAUTION:
- **When a new belt is installed as a replacement, adjust it to the value specified under “New” value because of insufficient adaptability with pulley grooves.**
- **If the belt deflection of the current belt is out of the “Limit for re-adjusting”, adjust to the “Adjusted” value.**
- **When checking belt deflection immediately after installation, first adjust it to the specified value. Then, after turning crankshaft two turns or more, re-adjust it to the specified value to avoid variation in deflection between pulleys.**
- **Make sure the belts are fully fitted into the pulley grooves during installation.**
- **Handle with care to avoid smearing the belts with oil or cooling water etc.**
- **Do not twist or bend the belts with strong force.**

AIR CONDITIONER COMPRESSOR BELT

1. Remove RH splash cover (with undercover attached).
2. Loosen idler pulley lock nut (A).
3. Turn adjusting bolt (B) to adjust.
   - Refer to EM-117, "Checking Drive Belts" .
4. Tighten lock nut (A).

Nut A:

: 31 - 39 N·m (3.1 - 4.0 kg-m, 23 - 28 ft-lb)

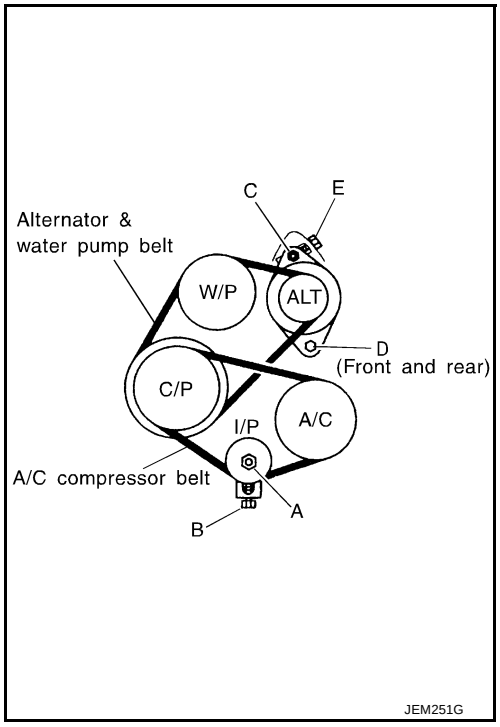

ALTERNATOR AND WATER PUMP BELT

1. Loosen adjusting lock nut (C).
2. Loosen alternator fixing bolts (D) (each on front and rear).
3. Turn adjusting bolt (E) to adjust.
   - Refer to EM-117, "Tension Adjustment" .
4. Tighten nut (C) and bolt (D) in this order.

Nut C:

: 19 - 24 N·m (1.9 - 2.5 kg-m, 14 - 18 ft-lb)

Bolt D:

: 44 - 57 N·m (4.4 - 5.9 kg-m, 32 - 42 ft-lb)

Removal and Installation

EBS00QFA

REMOVAL

1. Loosen each belt. Refer to EM-117, "Tension Adjustment" .
2. Remove air conditioner compressor belt.
3. Remove alternator and water pump belt.

INSTALLATION

1. Install each belt on pulley in reverse order of removal.
2. Adjust belt tension. Refer to EM-117, "Tension Adjustment" .
3. Tighten nuts and bolts provided for adjustment to the specified torque.
4. Check again that each belt tension is as specified.

AIR CLEANER AND AIR DUCT

PFP:16500

Removal and Installation

EBS00QFB

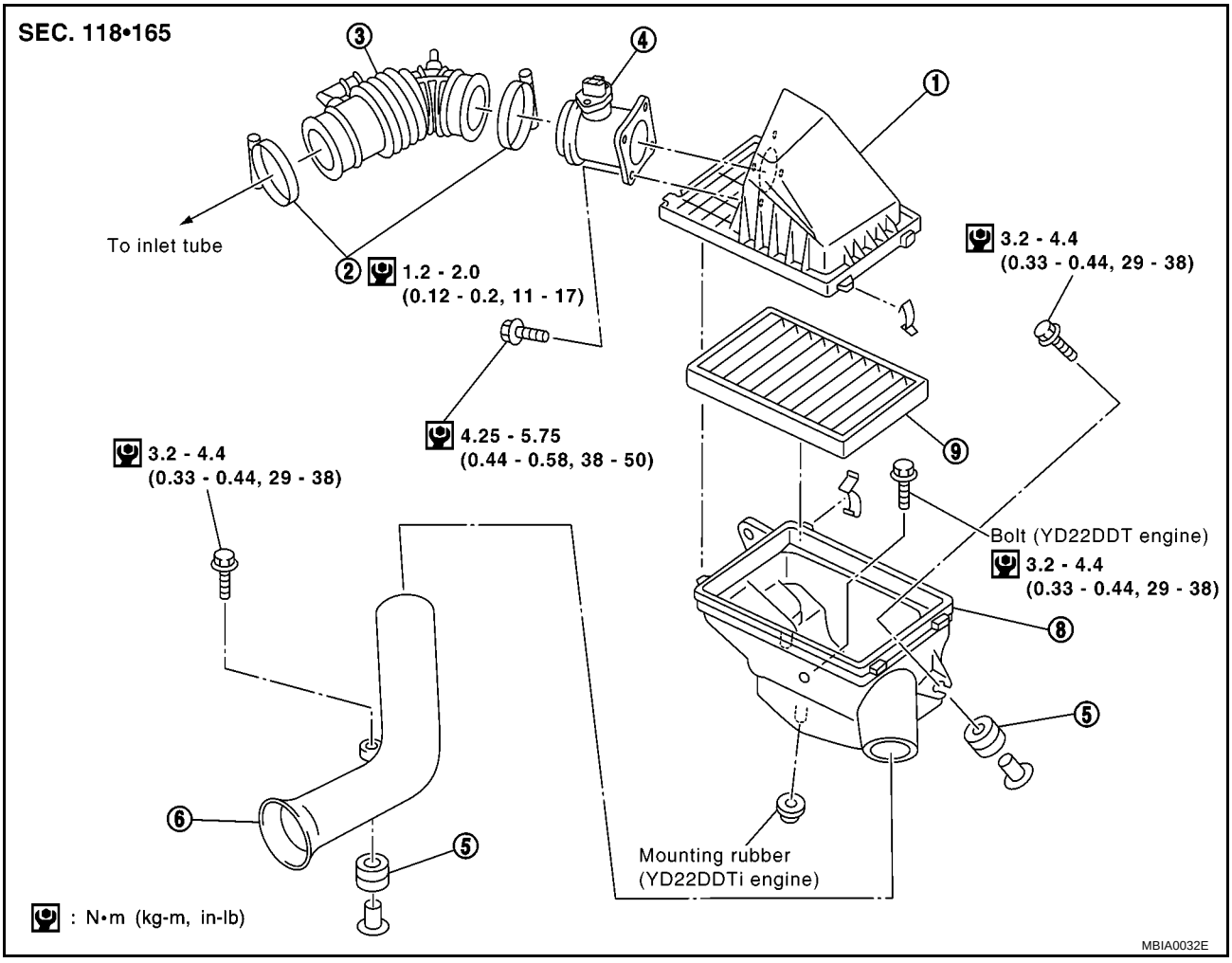

1. Air cleaner case (upper)
2. Clamp
3. Air duct
4. Mass air flow sensor
5. Grommet
6. Air duct side
7. Air cleaner case (lower)
8. Air cleaner element

REMOVAL

1. Remove mass air flow sensor harness clamp.
2. Remove harness connector from mass air flow sensor.
3. Remove air duct, air cleaner case/ mass air flow sensor.

- Add marks as necessary for easier installation.

4. Remove mass air flow sensor from air cleaner case.

CAUTION:
Handle mass air flow sensor with following cares.

- **Do not shock it.**
- **Do not disassemble it.**
- **Do not touch its sensor.**

INSTALLATION

1. Attach each joint aligning marks put at removal. Screw clamps firmly.
2. Install in the reverse order of removal.

CHANGING AIR CLEANER ELEMENT

1. Remove air cleaner case.

2. Remove clips and lift up air cleaner upper case.
3. Remove air cleaner element.

CHARGE AIR COOLER

PFP:14461

Removal and Installation

EBS00QFC

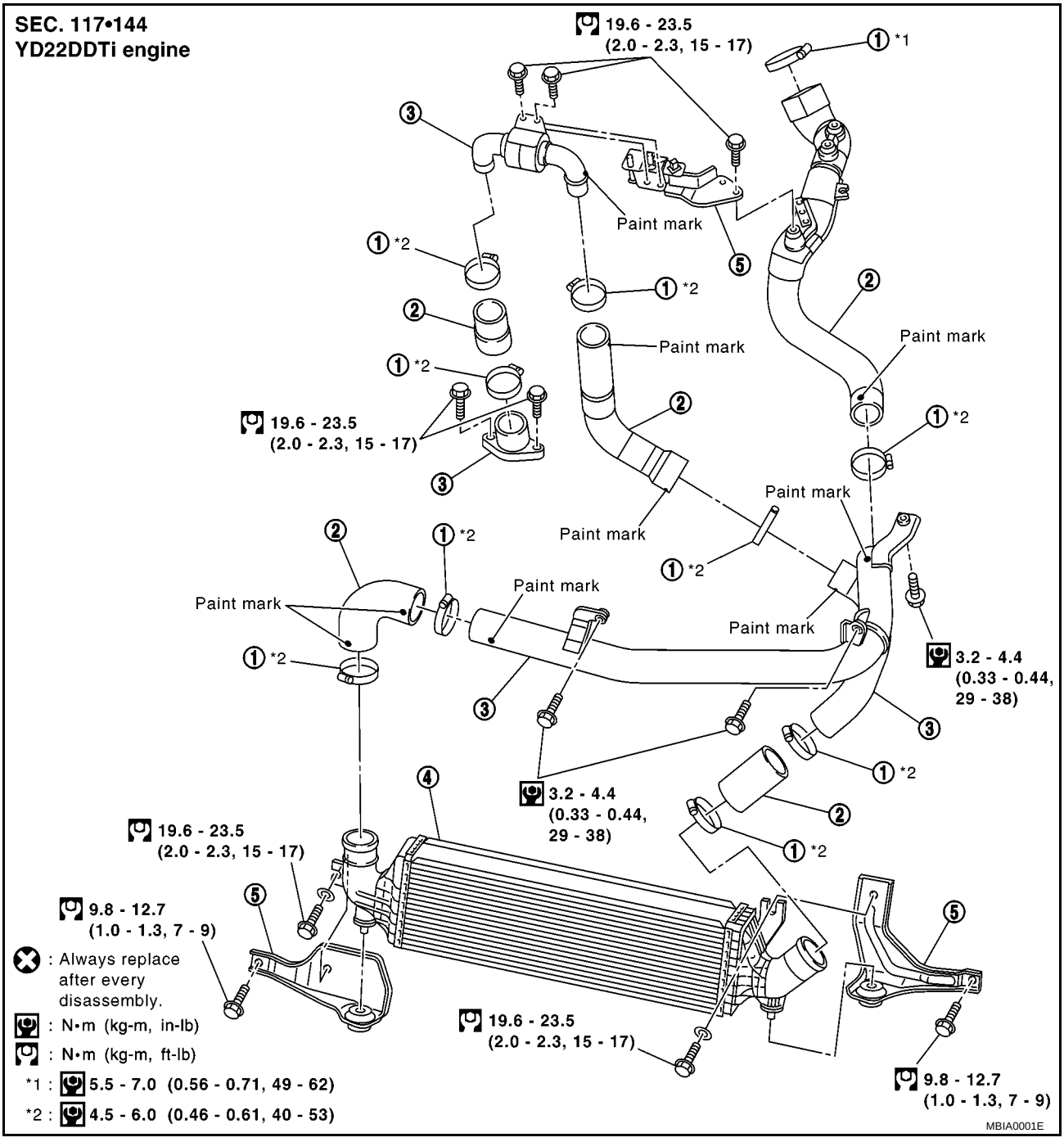

1. Hose clamp
2. Air inlet hose
3. Air inlet tube
4. Charge air cooler
5. Bracket

REMOVAL

1. Remove front bumper. Refer to BT-7, “Body Front End”.
2. Remove battery and tray (with fusible link and fuse box).
3. Remove air cleaner and air duct. Refer to EM-119, "Removal and Installation" .
4. Remove air inlet hose and tube.
5. Remove charge air cooler.
6. Remove and install with bottom bracket as an assembly.

CAUTION:
When removing charge air cooler, close opening on turbocharger and on intake manifold with shop cloth or other suitable material.

INSPECTION AFTER REMOVAL

Check air passages of charge air cooler core and fins for clogging, leaks or deformation. Clean or replace charge air cooler if necessary.

- **Be careful not to deform core fins.**

INSTALLATION

Pay attention to identification mark and direction when installing air inlet hose and tubes. Refer to EM-121, "Removal and Installation" .

INTAKE MANIFOLD

PFP:14003

Removal and Installation

EBS00QFD

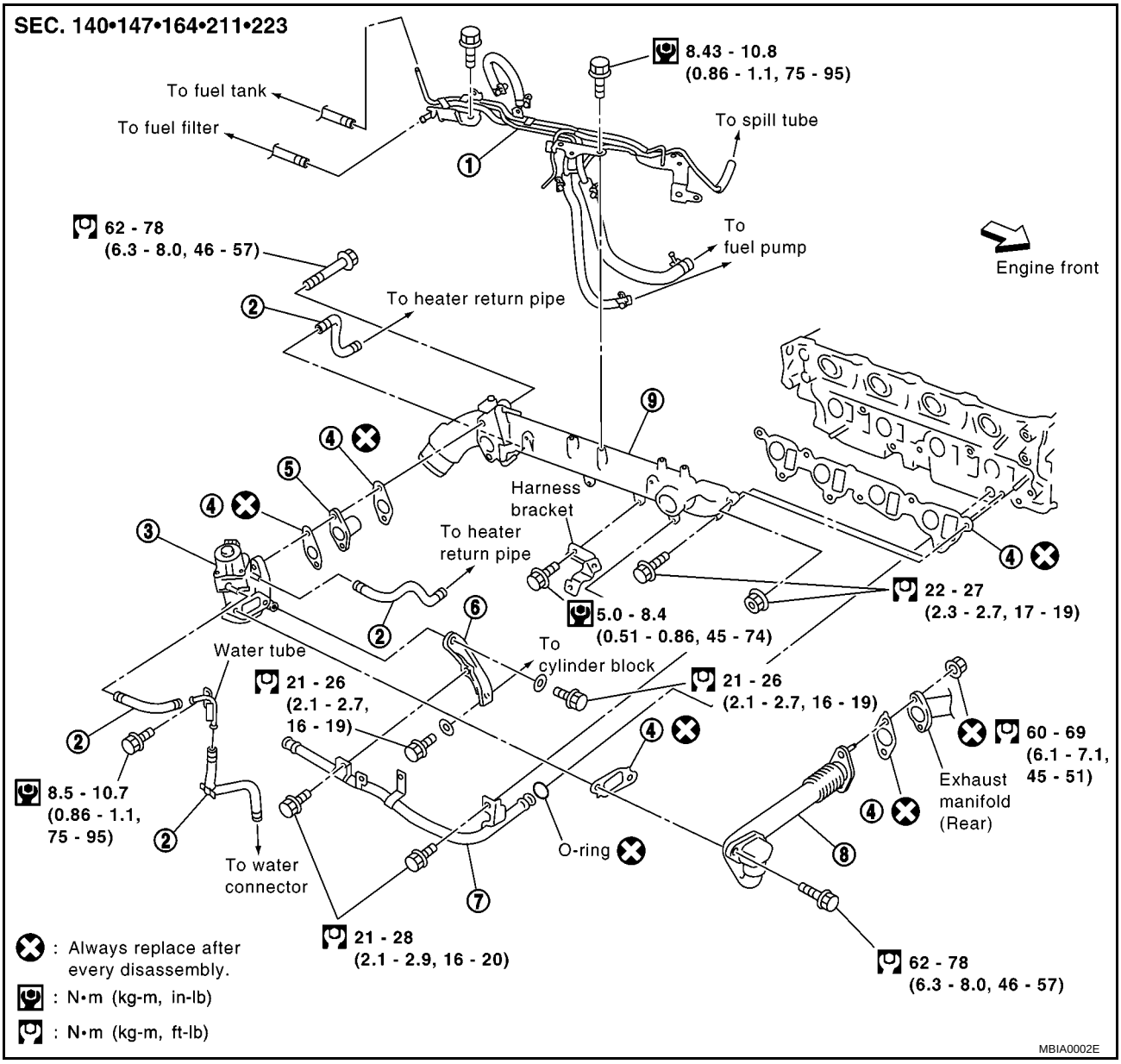

1. Fuel gallery
2. Water hose
3. Electronic EGR volume control valve
4. Gasket
5. EGR passage
6. EGR support
7. Water pipe
8. EGR tube
9. Intake manifold

REMOVAL

WARNING:

To avoid the danger of being scalded, never drain the coolant when the engine is hot.

1. Drain engine coolant. Refer to LC-40, “Changing Engine Coolant”.
2. Remove engine cover. Refer to EM-160, "Removal and Installation"
3. Remove air duct. Refer to EM-119, "Removal and Installation" .
4. Remove air inlet hose and pipe. Refer to EM-121, "Removal and Installation" .
5. Remove exhaust manifold cover.
6. Disconnect electronic EGR volume control valve water hoses and harness.
7. Disconnect heater hose.
8. Remove EGR tube.

9. Remove injection tube center. Refer to EM-147, "Removal and Installation" .
10. Remove water pipe.
11. Remove fuel hose.
    - To prevent fuel from flowing out, plug the opening of the hose with a blind plug after disconnection.

    CAUTION:
    Be careful not to spill fuel in the engine component.

12. Loosen bolts and nuts in the reverse order of that shown in the figure.
13. Remove electronic EGR volume control valve from intake manifold.

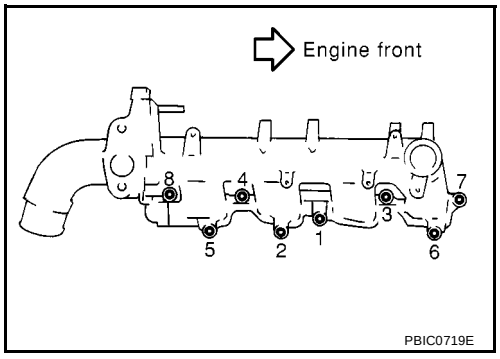

INSPECTION AFTER REMOVAL

Surface Distortion

- Check distortion on the mounting surface with a straightedge and feeler gauge.

  Limit : 0.1 mm (0.004 in)

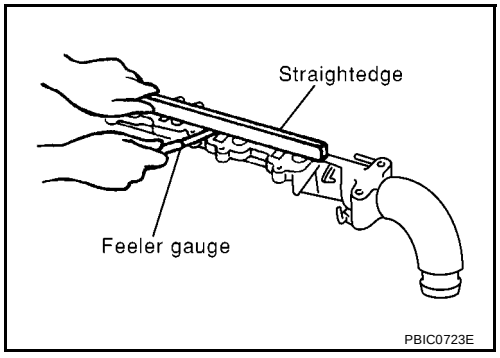

INSTALLATION

Following instructions below, install in reverse order of removal.

1. Install electronic EGR volume control valve.
   - **Handle with care avoiding any shocks.**
   - **Do not disassemble or adjust.**
2. Install intake manifold.
   - Tighten fixing bolts and nuts in numerical order as shown in the figure.
   - When stud bolts come off, install with the following torque.

     : 10 - 11 N·m (1.0 - 1.2 kg-m, 87 - 104 in-lb)

3. Install water hose.
   - Install water hose by referring to identification marks avoiding twisting.
   - When an insert stopper is not provided with the pipe, insert the hose up to dimension A. When the pipe is shorter than dimension A, insert hose fully until it reaches the end.

     Dimension A : 25 - 30 mm (0.984 - 1.181 in)

   - When an insert stopper is provided on the pipe side, insert the hose until it reaches the bulge.
   - When marking is provided on the pipe, insert hose until it covers half of the marking.
4. Install remaining parts in reverse order of removal.
5. Before starting engine, bleed air from fuel piping. Refer to FE-18, “Bleeding Fuel Filter”.

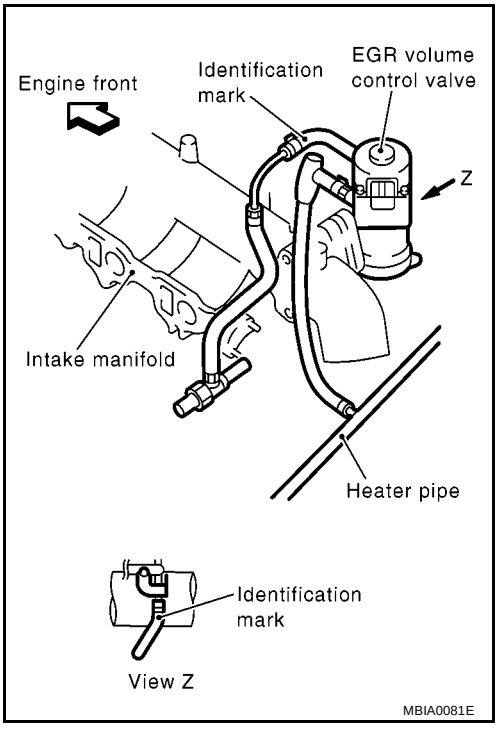

INSPECTION AFTER INSTALLATION

Start engine and increase engine speed to check for fuel leak.

CATALYST

PFP:20905

Removal and Installation

EBS00QFE

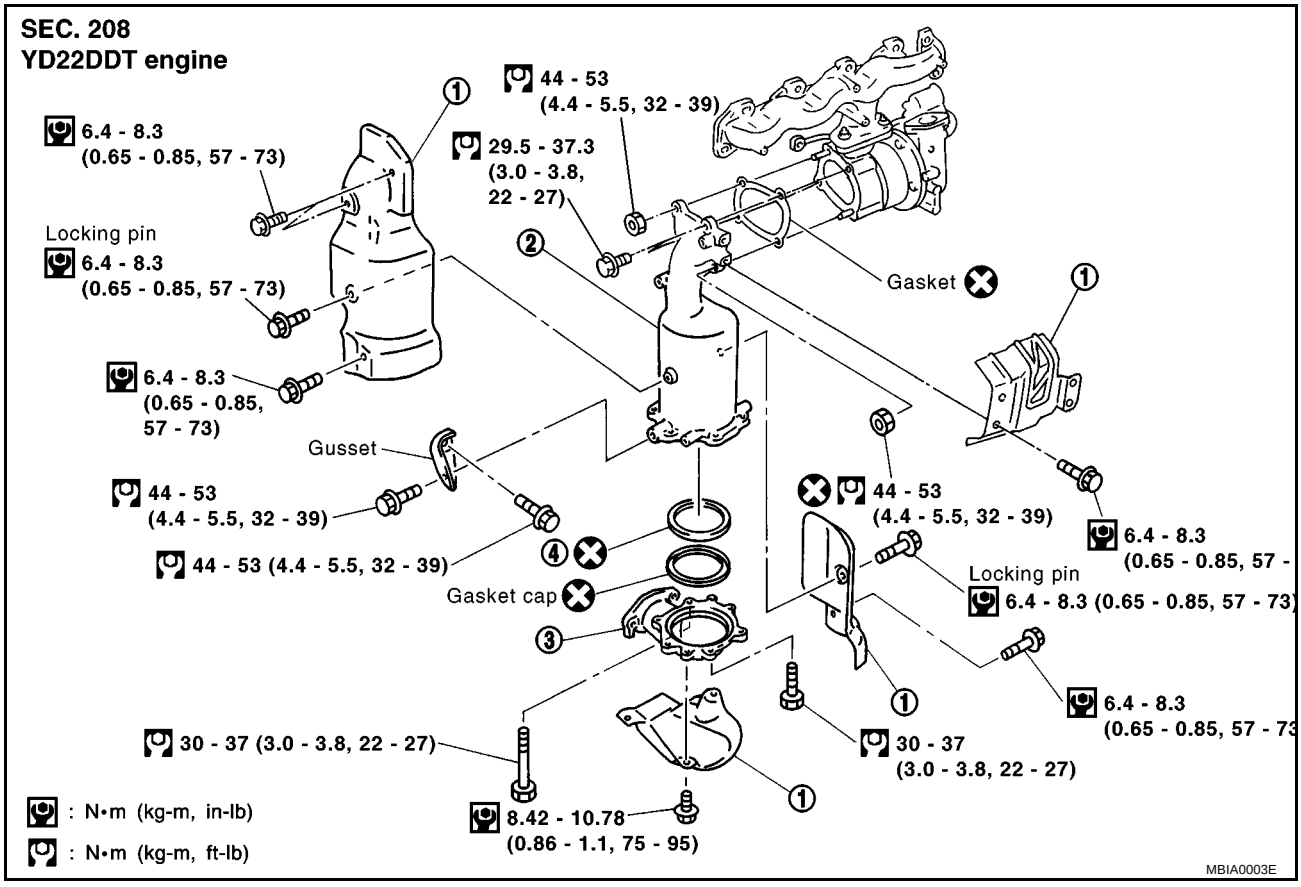

1. Insulator
2. Catalyst
3. Catalyst rear diffuser
4. Gasket

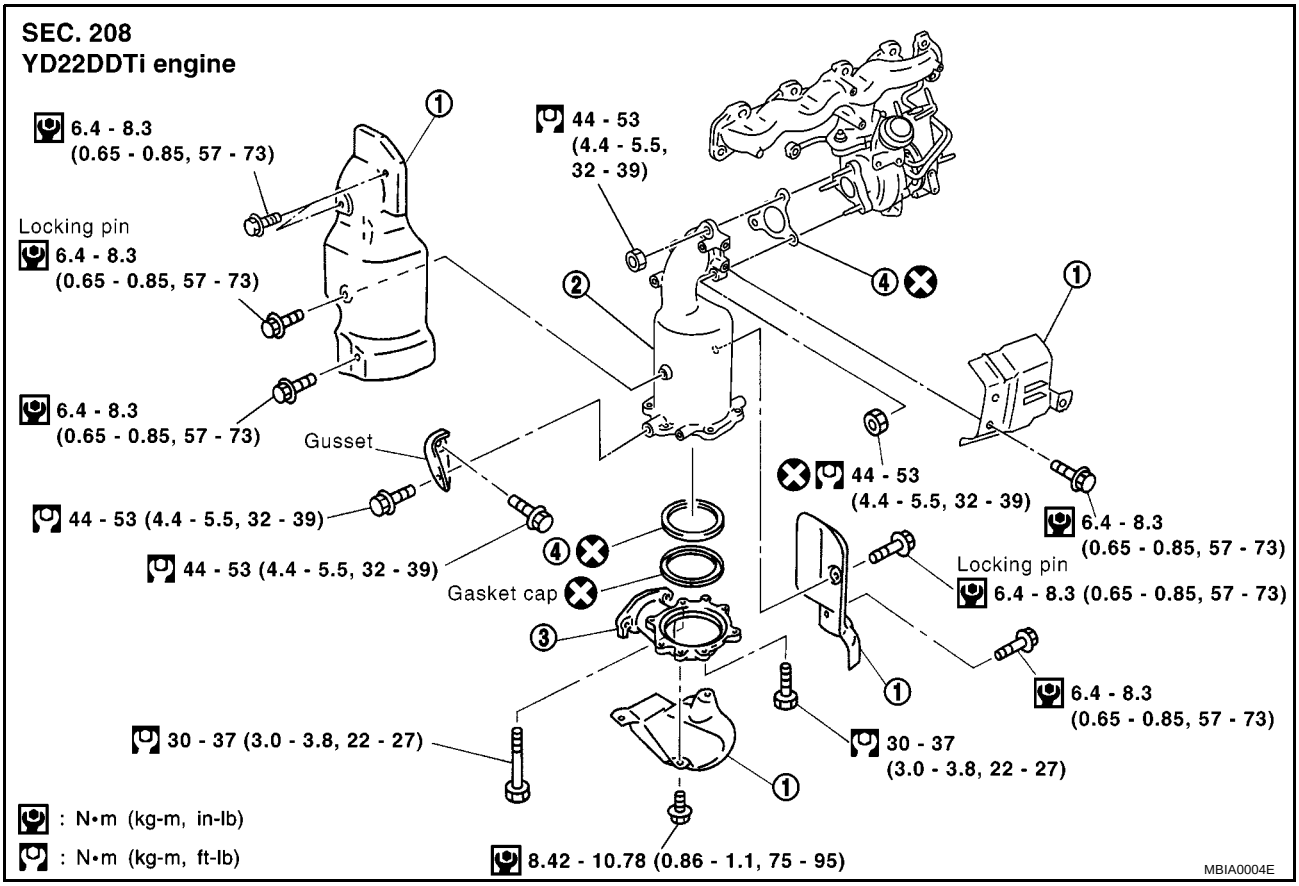

1. Insulator
2. Catalyst
3. Catalyst rear diffuser
4. Gasket

REMOVAL

1. Remove engine undercover.
2. Drain engine coolant. Refer to LC-40, “Changing Engine Coolant”.
3. Remove radiator upper and lower hoses.
4. Remove radiator and radiator fan. Refer to LC-39, “Radiator”.
5. Remove insulators.
6. Remove water inlet pipe.
7. Disconnect exhaust front tube.
8. Remove catalyst.

CAUTION:

Do not disassemble.

Install two locking pins into both sides of the catalyst. Be careful not to confuse locking pins with insulator mounting bolts.

Catalyst locking pin	**: Flange bolt (black)**
Insulator mounting bolt	**: Washer bolt (silver or yellow)**

INSTALLATION

Install in reverse order of removal.

- Pushing gussets against the oil pan and the catalyst, temporarily tighten the mounting bolt. And then tighten it to the specified torque.

EXHAUST MANIFOLD AND TURBOCHARGER

PFP:14004

Removal and Installation

EBS00QFF

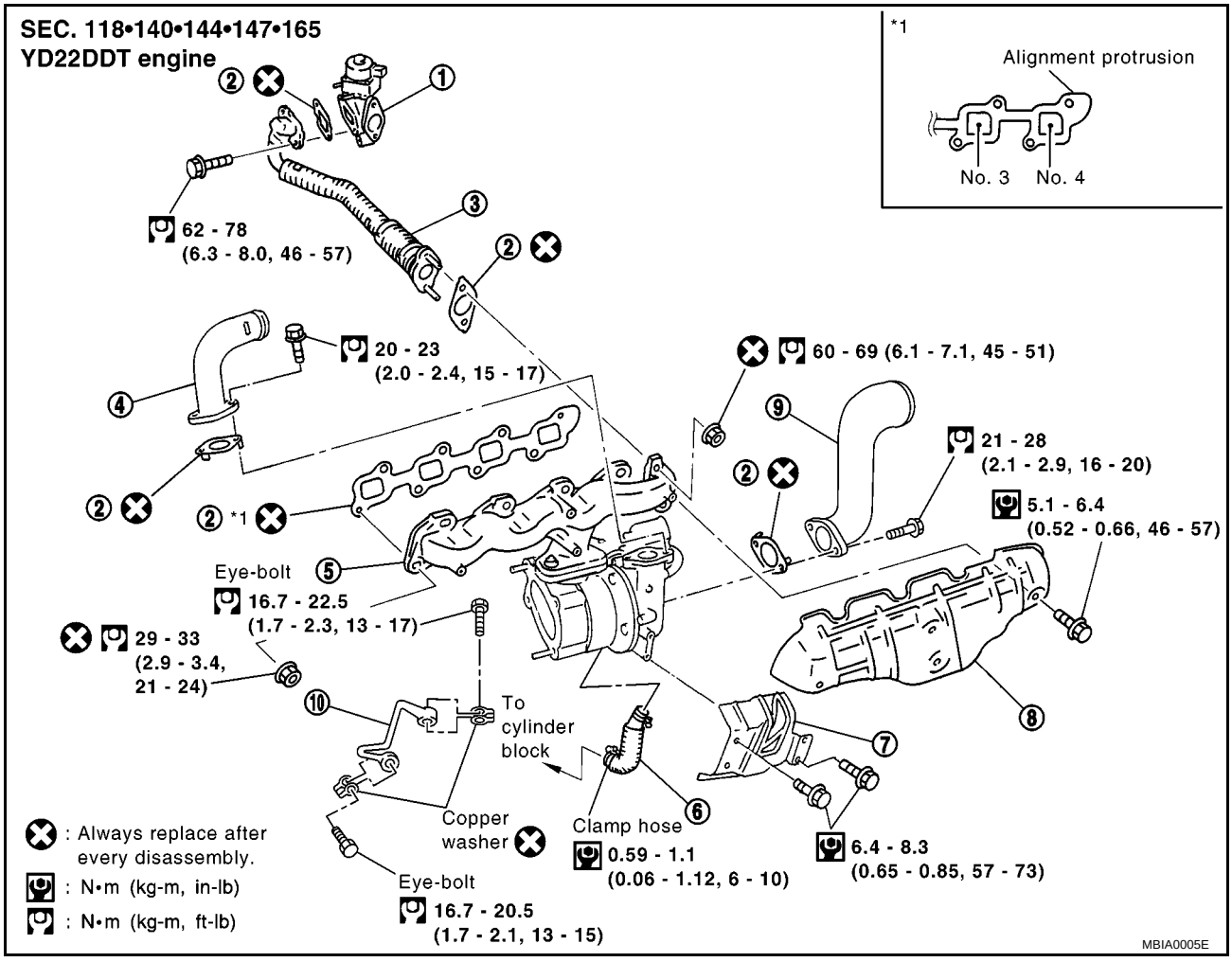

1.	Electronic EGR volume control valve	2.	Gasket	3.	EGR tube
4.	Air inlet pipe	5.	Exhaust manifold and turbocharger assembly	6.	Oil return hose
7.	Turbo insulator	8.	Exhaust manifold insulator	9.	Air inlet pipe
10.	Oil feed tube				

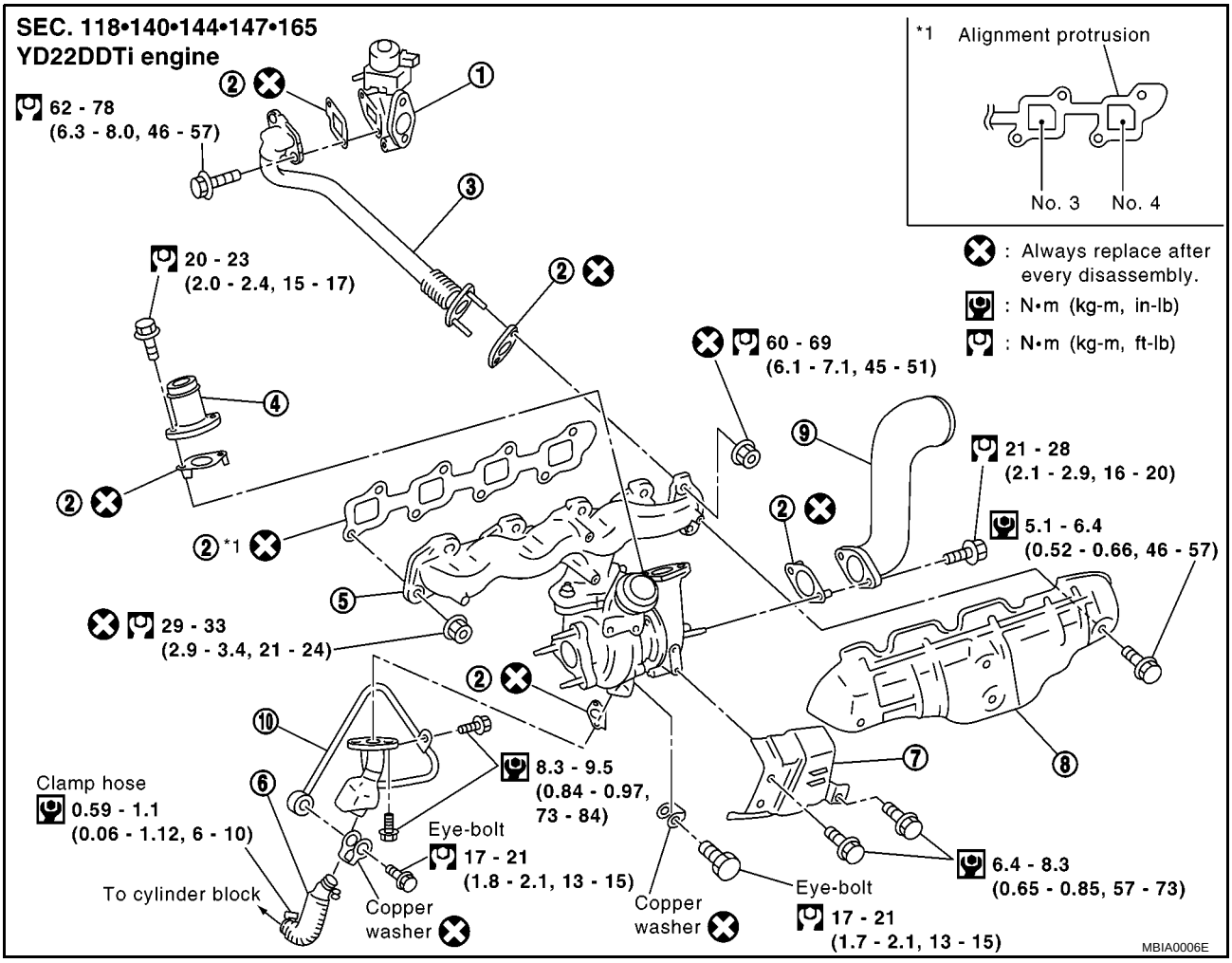

1.	Electronic EGR volume control valve	2.	Gasket	3.	EGR tube
4.	Air inlet pipe	5.	Exhaust manifold and turbocharger assembly	6.	Oil return hose
7.	Turbo insulator	8.	Exhaust manifold insulator	9.	Air inlet pipe
10.	Oil feed tube, oil return tube				

REMOVAL

1. Drain engine coolant. Refer to LC-40, “Changing Engine Coolant”.
2. Remove engine cover. Refer to EM-160, "Removal and Installation" .
3. Remove air duct and air inlet pipe. Refer to EM-119, "Removal and Installation" .
4. Remove engine undercover.
5. Remove radiator upper and lower hoses. Refer to LC-39, “Radiator”.
6. Remove radiator and radiator fan. Refer to LC-39, “Radiator”.
7. Remove air inlet pipe.
8. Disconnect exhaust front tube.
9. Remove catalyst. Refer to EM-126, "Removal and Installation" .
10. Remove exhaust manifold cover.
11. Remove insulator.
12. Each wiring and piping (disconnect/move)

13. Loosen exhaust manifold mounting nuts in the reverse order specified in the figure.
14. Rotate the exhaust manifold and turbocharger assembly so that the rear side (EGR tube mounting side) faces upward. And then pull out the assembly from between the engine and the air conditioning piping.

CAUTION:
Be careful not to deform each turbocharger piping when pulling out the assembly.

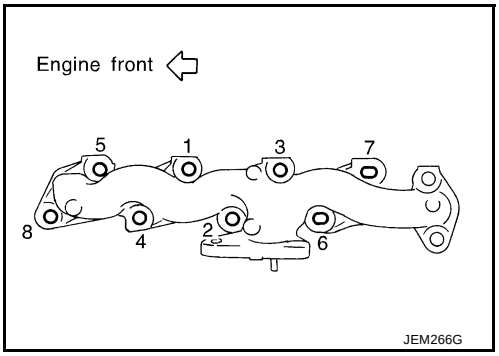

INSTALLATION

- When a stud bolt is pulled out, tighten it to the following torque:

  : 12.7 - 16.7 N·m (1.3 - 1.7 kg-m, 9 - 12 ft-lb)

- Tighten the exhaust manifold mounting nuts in the following procedure:

1. Tighten the nuts in the order specified in the figure.
2. Re-tighten the nuts 1 to 4.
3. Install the gasket so that the alignment protrusion faces the No. 4 port.
4. Install in reverse order of removal.

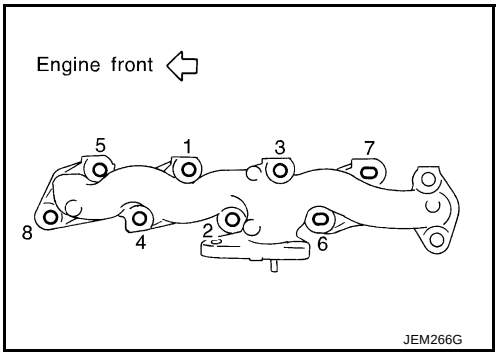

INSPECTION AFTER INSTALLATION

Start engine and raise engine speed to check no exhaust emission leaks.

Disassembly and Assembly

EBS00QFG

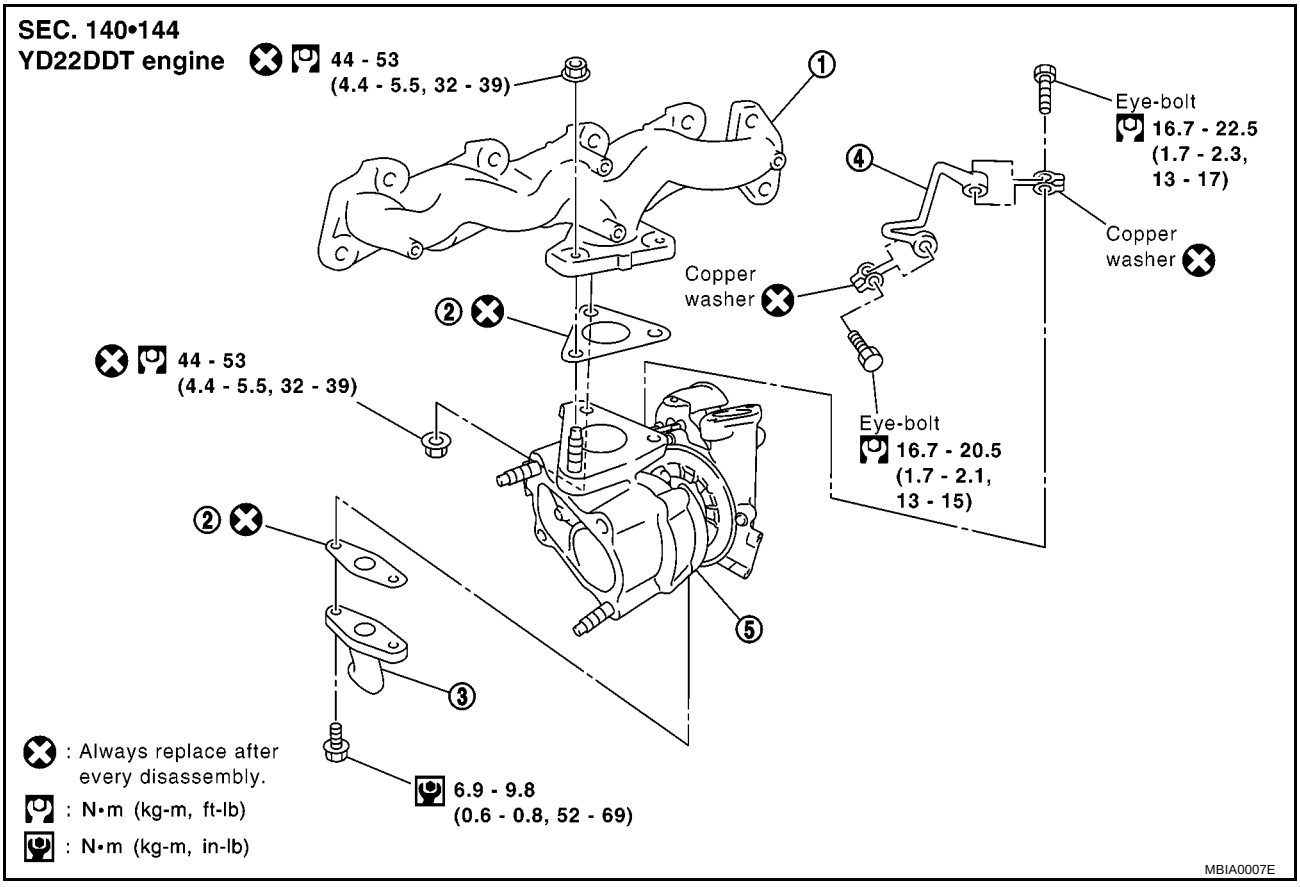

1. Exhaust manifold
2. Gasket
3. Oil return tube
4. Oil feed tube
5. Turbocharger

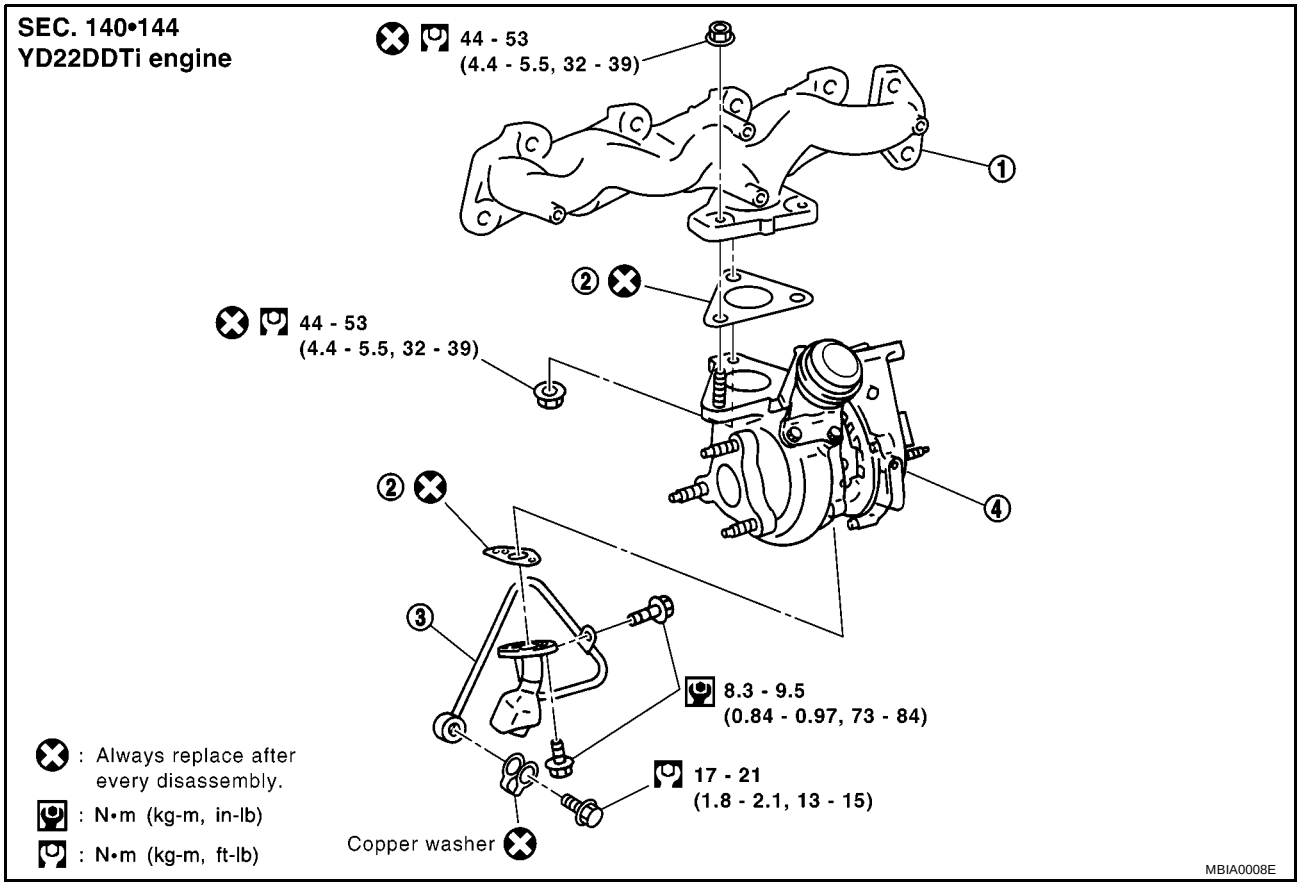

1. Exhaust manifold
2. Gasket
3. Oil return tube
4. Turbocharger

REMOVAL

1. After applying penetrative lubricant to the mounting nuts, check for the penetration of the lubricant, and then loosen the nuts to remove.

   CAUTION:
   Do not disassemble or adjust the turbocharger body.

2. When a stud bolt is pulled out, tighten it to the following torque:

   : 24 - 27 N·m (2.4 - 2.8 kg-m, 18 - 20 ft-lb)

INSPECTION AFTER REMOVAL

Surface Distortion

Check the distortion on the mounting surface in the six directions using a straightedge and a feeler gauge.

Limit : 0.3 mm (0.012 in)

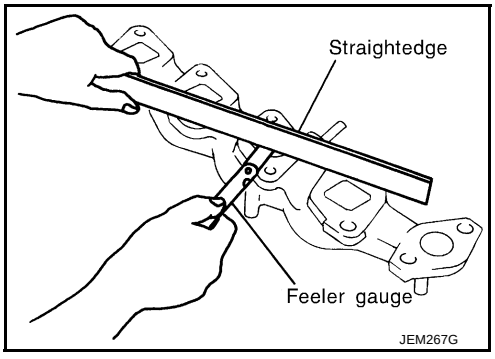

Turbocharger

EBS00QFH

YD22DDT engine

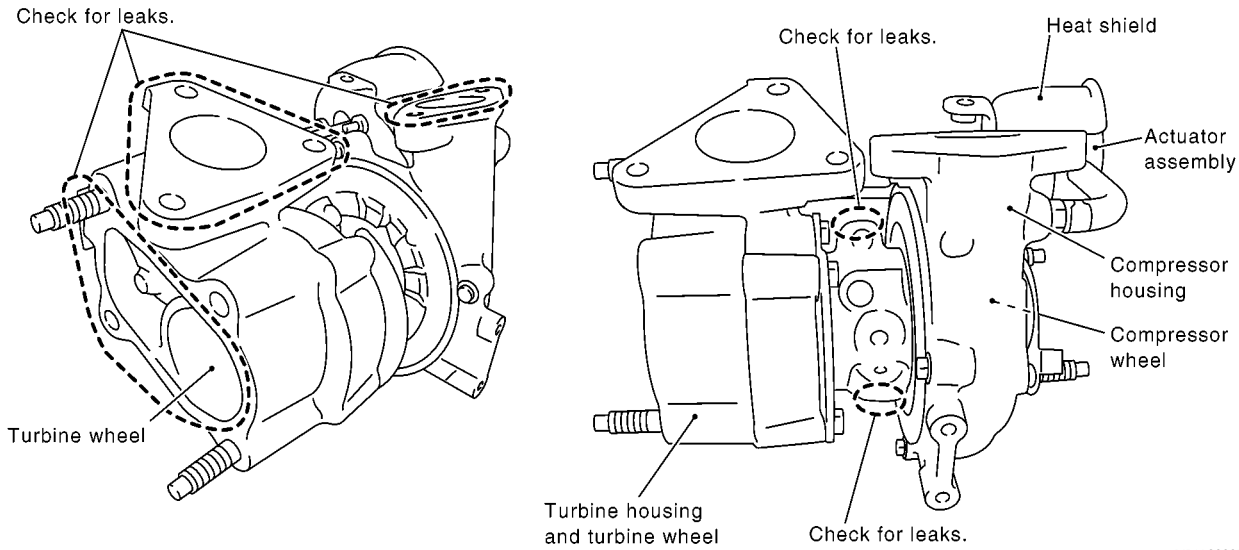

YD22DDTi engine

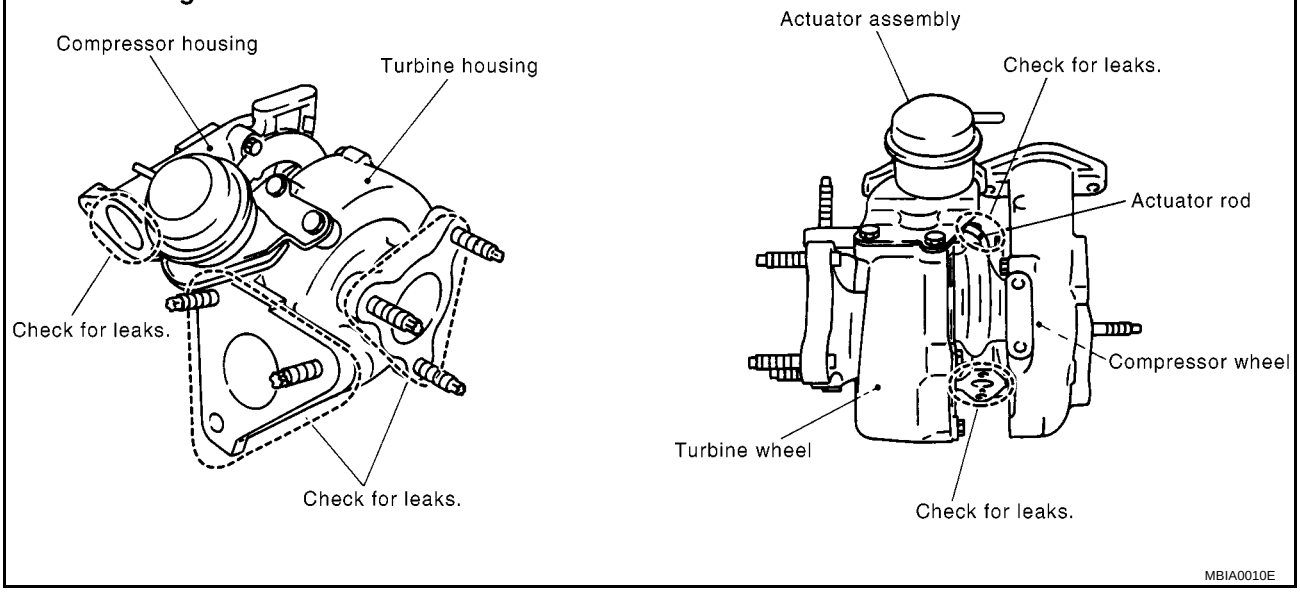

CAUTION:

When the compressor wheel turbine wheel or rotor shaft is damaged, remove all the fragments and foreign matter left in the following passages in order to prevent a secondary failure:

Suction side : Between turbocharger and air cleaner

Exhaust side : Between turbocharger and catalyst

ROTOR SHAFT CLEARANCE

- Check that the rotor shaft rotates smoothly without any resistance when it is rotated by your fingertips.
- Check that the rotor shaft is not loose when it is moved vertically or horizontally.

Standard : 0.086 - 0.117 mm (0.0034 - 0.0046 in)

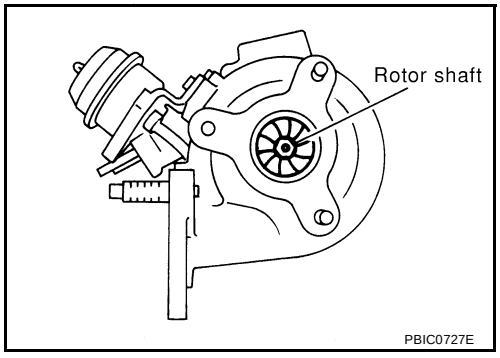

ROTOR SHAFT END PLAY

Place a dial gauge at the rotor shaft end in the axial direction to measure the end play.

Standard : 0.036 - 0.090 mm (0.0014 - 0.0035 in)

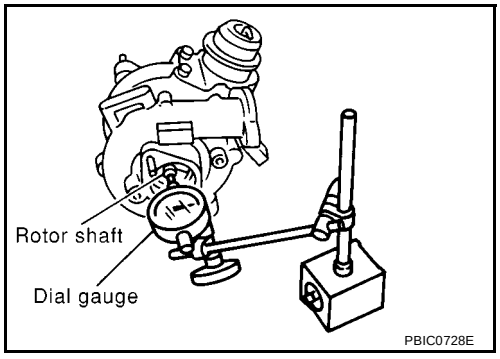

TURBINE WHEEL

- Check that there is no oil adhesion.
- Check that there is no carbon accumulation.
- Check that blades of the turbine wheel are not bent or broken.
- Check that the turbine wheel does not interfere with the turbine housing.

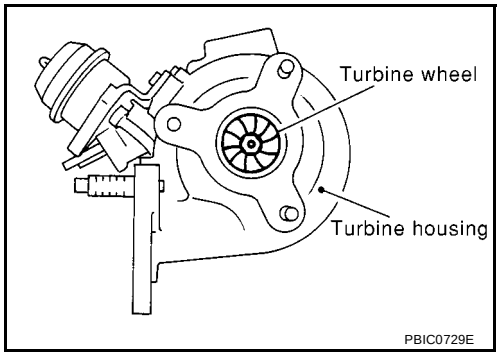

COMPRESSOR WHEEL

- Check that there is no oil adhesion inside the air inlet.
- Check that the compressor wheel does not interfere with the compressor housing.
- Check that the wheel is not bent or broken.

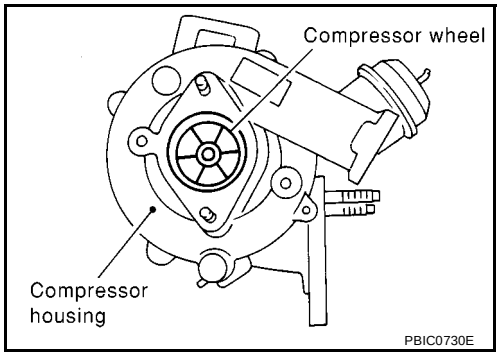

TURBOCHARGER BOOST CONTROL ACTUATOR

- Connect the handy vacuum pump to the actuator, and check that the rod strokes smoothly in compliance with the following pressure.
- Pressure to be applied at actuator part to move rod end as follows:

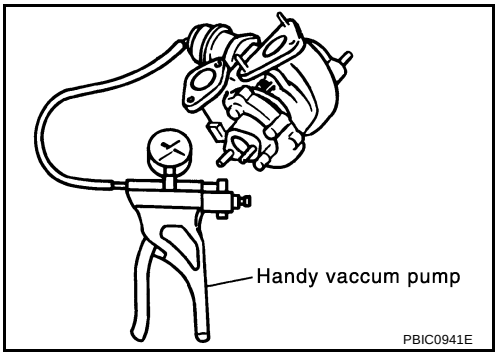

Standard (Pressure/rod stroke amount):

YD22DDT engine

: 131.24 - 136.56 kPa (1,312.4 - 1,365.6 mbar, 984 - 1,024 mmHg, 38.7 - 40.3 inHg) / 0.38 mm (0.0150 in)

: 155.44 - 164.76 kPa (1,554.4 - 1,647.6 mbar, 1,166 - 1,236 mmHg, 45.9 - 48.7 inHg) / 4.0 mm (0.157 in)

YD22DDTi engine

: 52.0 - 54.6 kPa (520 - 546 mbar, 390 - 410 mmHg, 15.306 - 16.094 inHg) / 0.2 mm (0.0079 in)

: 32.0 - 40.0 kPa (320 - 400 mbar, 240 - 300 mmHg, 9.42 - 11.78 inHg) / 5.0 mm (0.197 in)

TROUBLE DIAGNOSIS OF TURBOCHARGER

Preliminary check:

- Check that the engine oil level is between MIN and MAX of the dipstick. (When the engine oil amount is more than MAX, the oil flows into the inlet duct through the blow-by gas passage, and the turbocharger is misjudged failure.)
- Ask the customer if he/she always runs the vehicle in idle engine speed to cool the oil down after driving.
- Replace the turbocharger assembly when any malfunction is found after unit inspections specified in the table below.
- If no malfunction is found after the unit inspections, judge that the turbocharger body has no failure. Check the other parts again.

Inspection item	Inspection result	Symptom (when each inspection item meets each inspection result)			
		Oil leakage	Smoke	Noise	Insufficient power/ acceleration failure
Turbine wheel	Oil leaks	C	A	C	C
	Carbon is accumulated	C	A	B	B
	Friction with housing	C	B	A	B
	Blades are bent or broken			A	A
Compressor wheel	Inside the air inlet is seriously contaminated by oil.	B	B		
	Friction with housing	C	B	A	B
	Blades are bent or broken			A	A
After checking both turbine and compressor, inspect rotor shaft end play.	There is resistance when the rotor shaft is rotated by your fingertips.		C	C	B
	The rotor shaft sometimes does not rotate by your fingertips.				A
	There is too much play in the bearing.	C	C	B	C
Oil return port	Carbon or sludge is accumulated in the waste oil hole.	C	A	C	C

A: Large possibility
B: Medium possibility
C: Small possibility

OIL PAN AND OIL STRAINER

PFP:11110

Removal and Installation

EBS00QFI

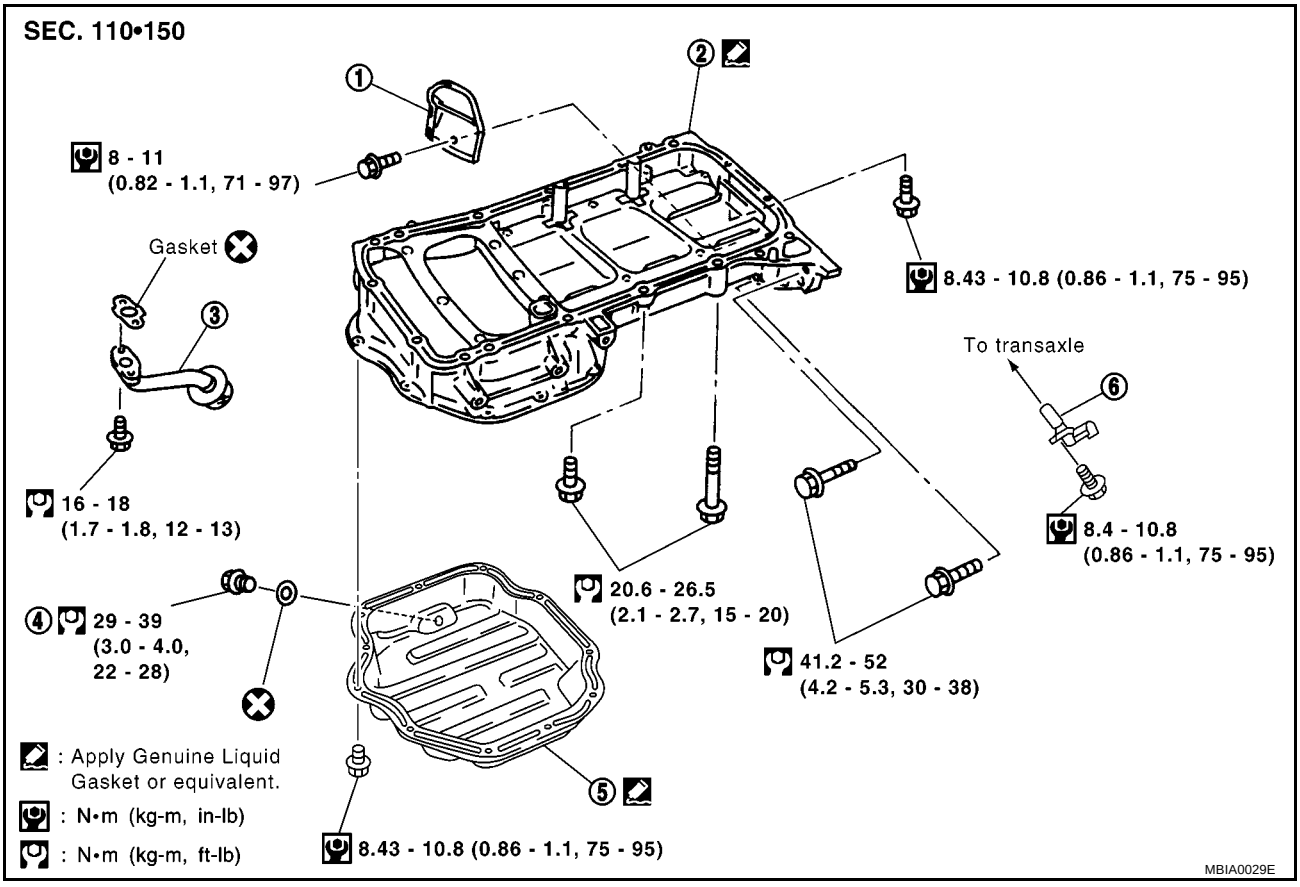

1. Rear plate cover
2. Oil pan upper
3. Oil strainer
4. Drain plug
5. Oil pan lower
6. Crankshaft position sensor

REMOVAL

WARNING:

To avoid the danger of being scalded, never drain the engine oil when the engine is hot.
When removing the transaxle, first remove the crankshaft position sensor from the assembly.
Be careful not to damage sensor edges and signal plate teeth.

1. Remove engine undercover.
2. Drain engine oil. Refer to LC-27, “Changing Engine Oil”.
3. Remove A/C compressor bracket.
4. Remove lower oil pan bolts. Loosen bolts in the reverse order of that shown in the figure.

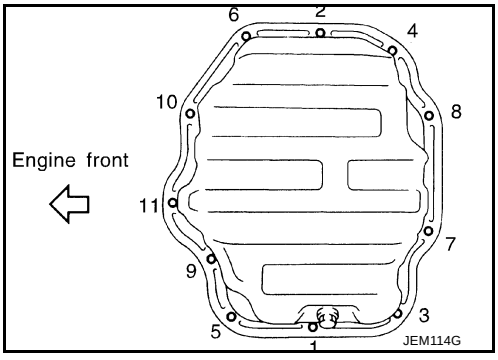

5. Remove lower oil pan.

a. Insert Tool between upper oil pan and lower oil pan.
   - **Be careful not to damage aluminum mating surface.**
   - **Do not insert screwdriver, or oil pan flange will be deformed.**

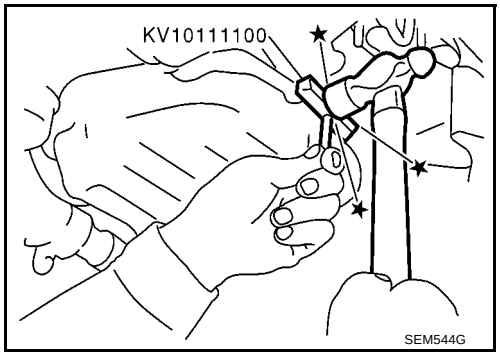

b. Slide Tool by tapping on the side of the Tool with a hammer.

c. Remove lower oil pan.

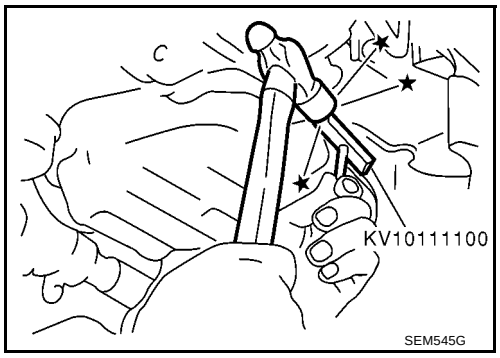

6. Remove oil strainer.
7. Remove front exhaust tube and its support.
8. Set a suitable transmission jack under transaxle and hoist engine with engine slinger. Refer to EM-197, "Removal and Installation" .
9. Remove front and rear engine mounting nuts and bolts.
10. Remove center member.

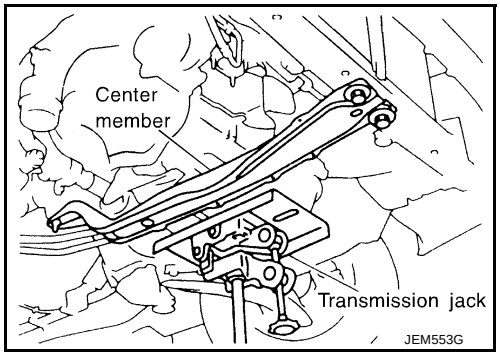

11. Remove crankshaft position sensor from transaxle.
12. Remove rear plate cover.

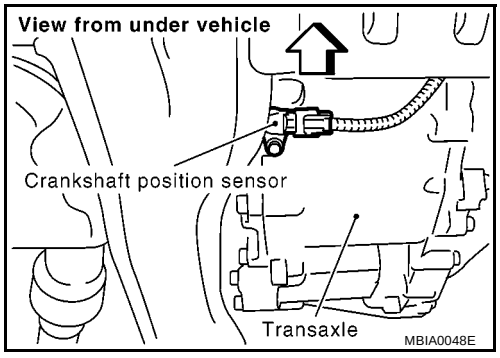

13. Remove catalyst rear diffuser. Refer to EM-126, "Removal and Installation" .
14. Loosen bolts in reverse order of illustration to remove upper oil pan.

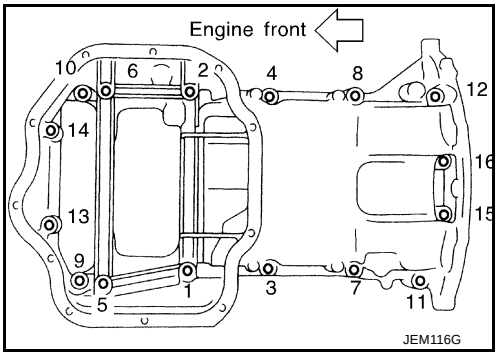

15. Remove four engine - to - transaxle bolts using a universal socket. (Commercial Service Tool).
16. Remove upper oil pan.
    - Insert Tool (Seal cutter) between upper oil pan and cylinder block. Slide tool by tapping on the side of the tool with a hammer. Remove oil pan.
    - **Be careful not to damage aluminum mating surface.**
    - **Do not insert screwdriver, or oil pan flange will be deformed.**
    - **Be careful to prevent No.15 and 16 bolts from falling into transaxle case.**

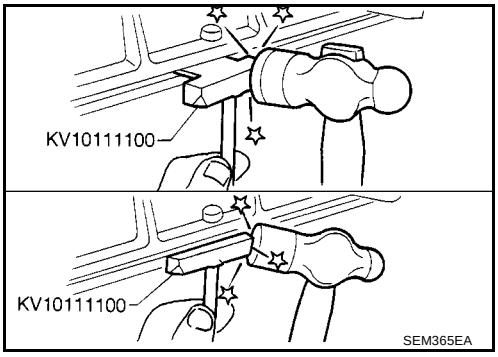

INSPECTION AFTER REMOVAL

Clean oil strainer if any object attached.

INSTALLATION

1. Install upper oil pan in the order below.

a. Use a scraper to remove old liquid gasket from mating surfaces.
    - **Also remove old liquid gasket from mating surface of cylinder block, front cover and lower oil pan.**
    - **Remove old liquid gasket from the bolt hole and thread.**

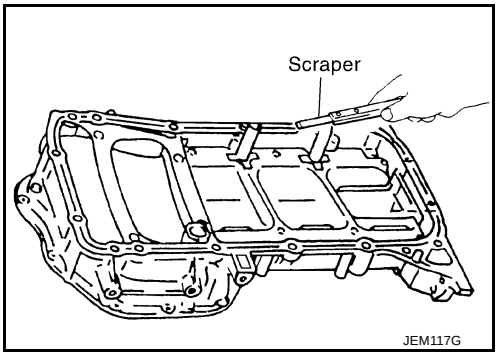

b. Apply a continuous bead of liquid gasket to mating surface of aluminum oil pan.
    - **Use Genuine Liquid Gasket or equivalent.**

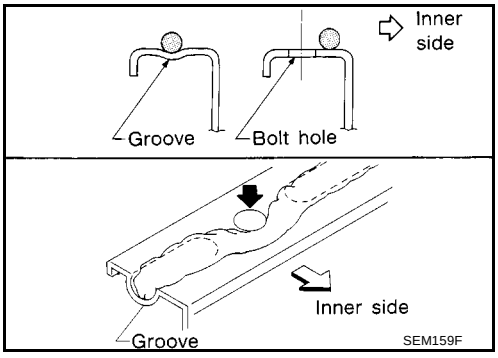

c. Apply Genuine Liquid Gasket or equivalent to areas shown in the figure.
   - **At the 8 bolt holes marked ★, liquid gasket should be applied on the rims of the holes.**
   - **Be sure liquid gasket is 3.5 to 4.5 mm (0.138 to 0.177 in) or 4.5 to 5.5 mm (0.177 to 0.217 in) wide. (Be careful that the diameter of the liquid gasket bead is different around the front.)**
   - **Attaching should be done within 5 minutes after coating.**

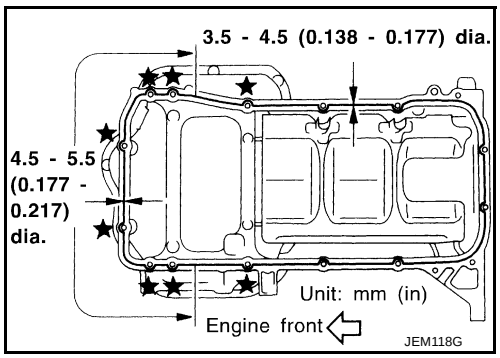

d. Install upper oil pan.

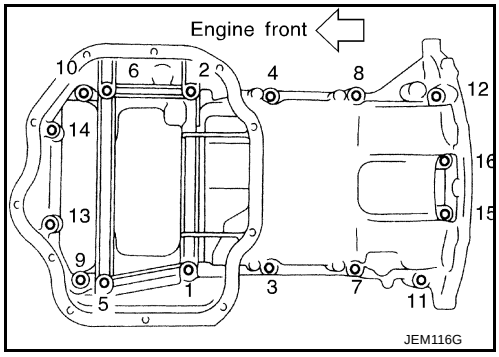

- Tighten bolts in numerical order to specified torque.
- Bolt dimensions vary depending on the installation location. Refer to the following and use appropriate bolts.

M6 x 30 mm (1.18 in) : Bolt No. 15, 16
M8 x 25 mm (0.98 in) : Bolt No. 3, 4, 9, 10
M8 x 60 mm (2.36 in) : Bolt No. 1, 2, 5, 6, 7, 8, 11, 12, 13, 14

- The shank length under the bolt neck above is the length of the threaded part (pilot portion not included).

2. Install the four engine-to-transaxle bolts. Refer to EM-137, "Removal and Installation" .
3. Install rear plate cover.
4. Install A/C compressor bracket.

   : 57 - 65 N-m (5.9 - 6.7 kg-m, 43 - 48 ft-lb)

5. Install drive belts.
6. Install center member.
7. install front and rear engine mounting insulator nuts and bolts.
8. Install crankshaft position sensor.
9. Install front exhaust tube and its support.
10. Install oil strainer.
11. Install lower oil pan.

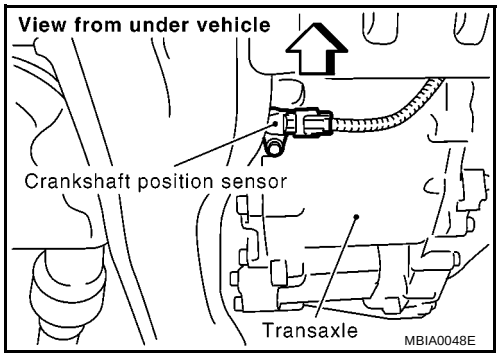

a. Use a scraper to remove old liquid gasket from mating surfaces.
   - **Also remove old liquid gasket from mating surface of upper oil pan.**

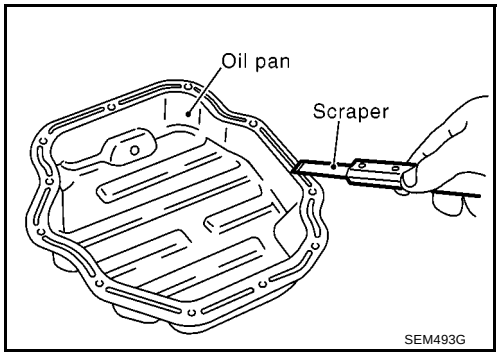

b. Apply a continuous bead of liquid gasket to mating surface of lower oil pan.
   - **Use Genuine Liquid Gasket or equivalent.**

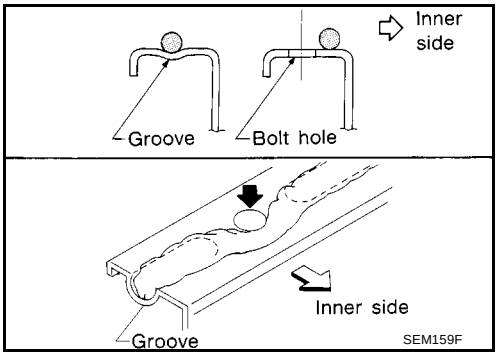

   - **Be sure liquid gasket is 3.5 to 4.5 mm (0.138 to 0.177 in) wide.**
   - **Attaching should be done within 5 minutes after coating.**

12. Install oil pan drain plug.
   - Refer to illustration of components parts for installation direction of washer.

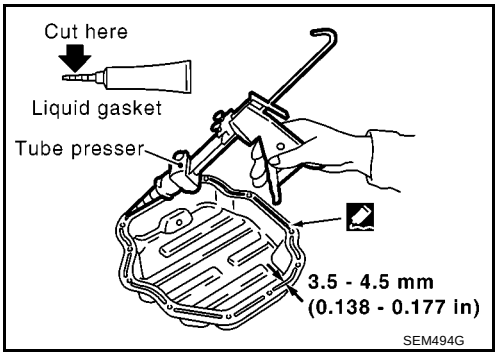

13. Install in the reverse order of removal after this step.
   - **Pour engine oil or start engine at least 30 minutes after oil pan is installed.**

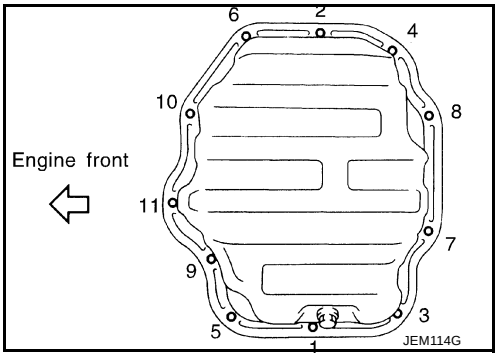

INSPECTION AFTER INSTALLATION

Check for leakage of engine oil when engine is warmed.

GLOW PLUG

PFP:22401

Removal and Installation

EBS00QFJ

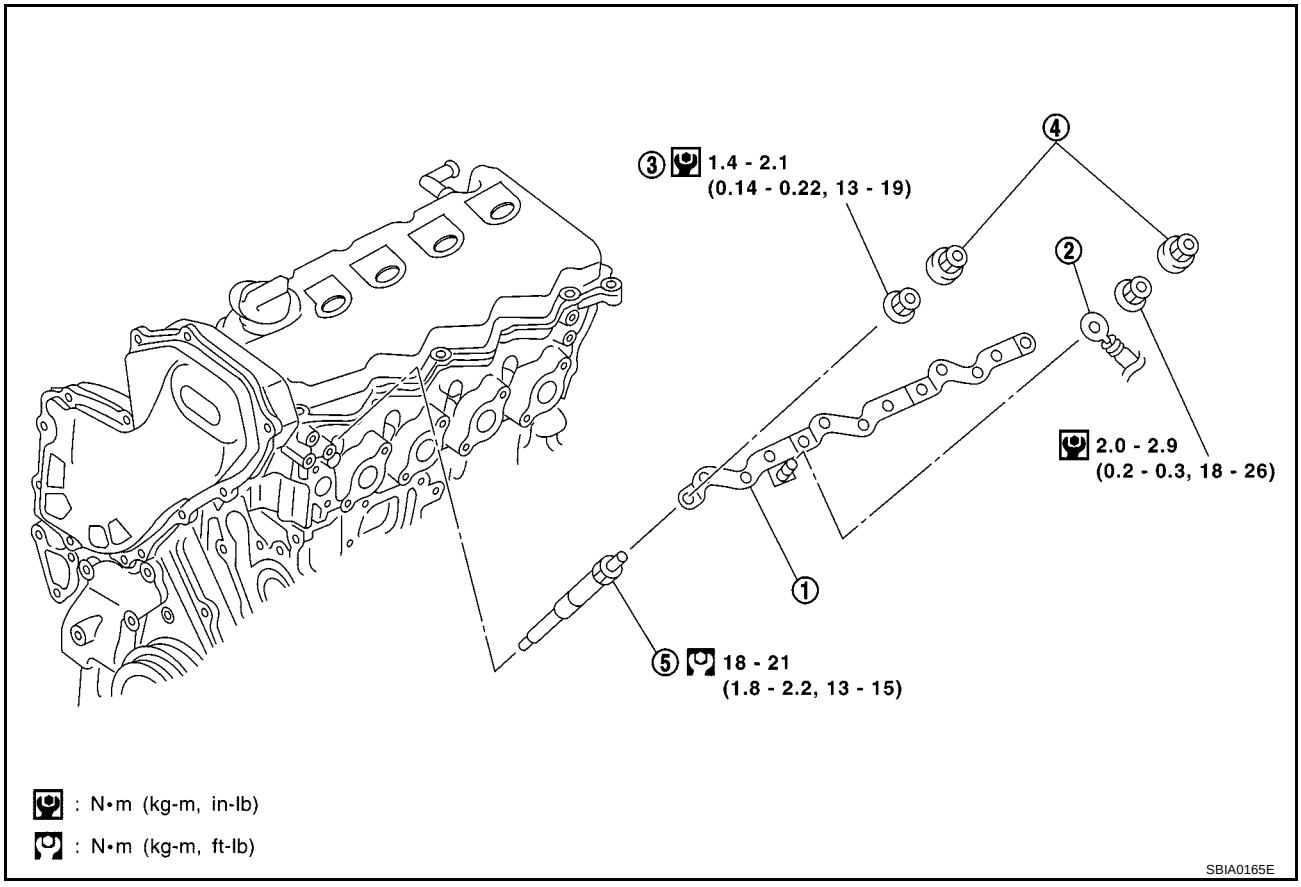

1. Glow plate
2. Glow harness
3. Glow nut
4. Cap
5. Glow plug

REMOVAL

CAUTION:

Remove glow plug only if necessary. If carbon adheres, it may be stuck and broken.

1. Disconnect harness connector from glow plate.
2. Remove glow nut to remove glow plate.
3. Remove glow plug.

   CAUTION:

   - **When removing or installing, do not use such tools as an air impact wrench.**
   - **Handle it carefully without giving any impact, even after removal. [As a guide, if it drops from height of 10 cm (3.94 in) or higher, always replace it.]**

INSTALLATION

1. Remove adhered carbon from glow plug installation hole with a reamer.
2. Install glow plug.
3. Install remaining parts in reverse order of removal.

VACUUM PUMP

PFP:41920

Removal and Installation

EBS00QFK

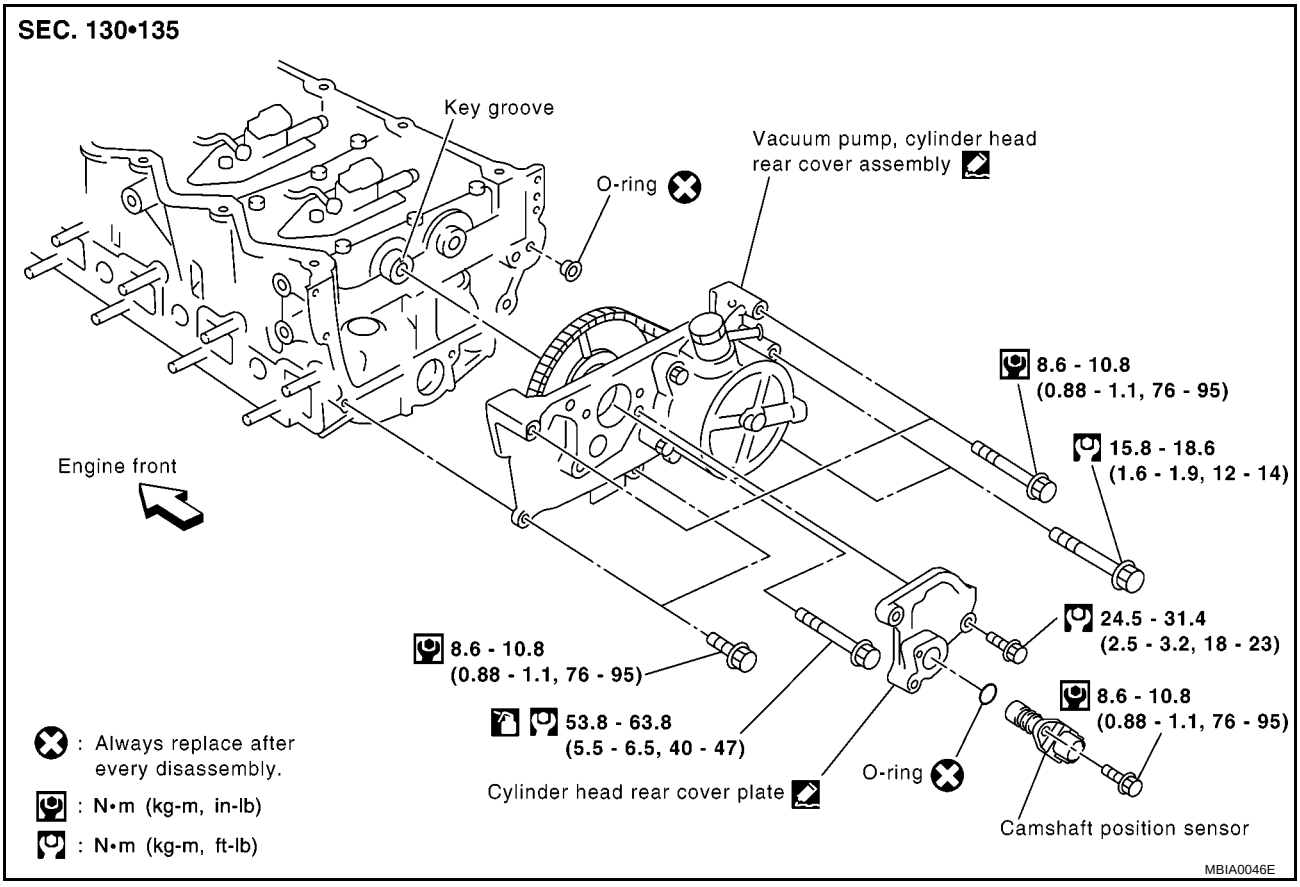

INSPECTION BEFORE REMOVAL

1. Disconnect vacuum hose, and connect a vacuum gauge via 3-way connector.
   - Disconnect point where vacuum from vacuum pump can be measured directly and install 3-way connector.
2. Start engine and measure generated vacuum at idle speed.

Standard : – 86.6 to – 101.3 kPa (– 866 to – 1,013 mbar, – 650 to – 760 mmHg, – 25.59 to – 29.92 inHg)

- If out of standard, check for air suction in vacuum route, and measure again.
- If still outside of standard, replace vacuum pump.

REMOVAL

1. Drain engine coolant. Refer to LC-40, “Changing Engine Coolant”.
2. Remove engine cover. Refer to EM-160, "Removal and Installation" .
3. Remove air duct and air cleaner case. Refer to EM-119, "Removal and Installation" .
4. Disconnect harness connector from fuel injector.
5. Remove injection tube. Refer to EM-147, "Removal and Installation" .
6. Remove fuel injector oil seal.
7. Remove rocker cover. Refer to EM-160, "Removal and Installation" .
8. Remove air inlet pipes. Refer to EM-128, "Removal and Installation" .
9. Remove exhaust manifold cover.
10. Disconnect electronic EGR volume control valve water hose and harness.
11. Disconnect heater hose.
12. Remove EGR tube.
13. Disconnect vacuum hose from vacuum pump side.

14. Remove camshaft position sensor.
15. Remove cylinder head rear cover plate.
16. Loosen and remove the installation bolts in rear cam sprocket.
    - Loosen rear cam sprocket installation bolts by fixing the hexagonal portion of the camshaft.
17. Remove vacuum pump and cylinder head rear cover assembly.
    - Remove and install vacuum pump, sprocket, drive chain and chain guide as an assembly.
    - Loosen mounting bolts in reverse order shown in figure.
    - Do not remove any bolts not shown in figure. (Especially never remove M6 bolts on vacuum pump.)
    - Use seal cutter (special service tool) or other suitable tool to remove.

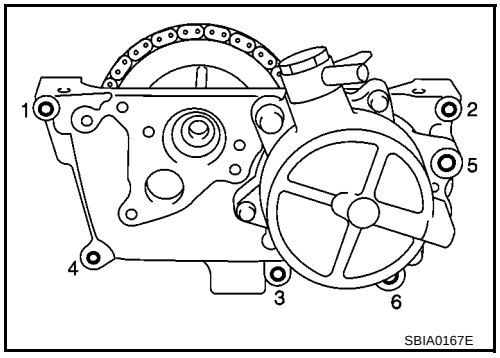

INSTALLATION

1. Install vacuum pump and cylinder head rear cover assembly onto cylinder head. Refer to EM-143, "Removal and Installation" .
    - Camshaft sprocket and camshaft need mating angle when installing to cylinder head.
    - Apply Genuine Liquid Gasket or equivalent (Refer to EM-110, "Precautions for Liquid Gasket" .) to area shown in the figure.
    - **Attaching should be done with in 5 minutes after coating.**
2. Tighten mounting bolts in order shown in the figure.
3. Install rear cam sprocket mounting bolts by fixing the hexagonal portion of the camshaft.
4. Tighten rear cam sprocket mounting bolts.
    - Check if the chain tension is excessive.

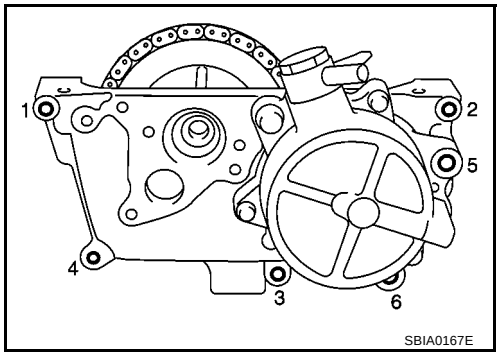

5. Install cylinder head rear cover plate.
    - Apply Genuine Liquid Gasket or equivalent (Refer to EM-110, "Precautions for Liquid Gasket" .) to area shown in the figure.
    - **Attaching should be done with in 5 minutes after coating.**

    CAUTION:
    Never start engine with vacuum circuit being open. If engine is started and vehicle is running while vacuum pump is open (with vacuum hose disconnected), PCV flow rate will increase and engine may be damaged.
6. Install in reverse order of removal after this step.
    - When vacuum hose is connected, insert it securely by at least 15 mm (0.59 in).

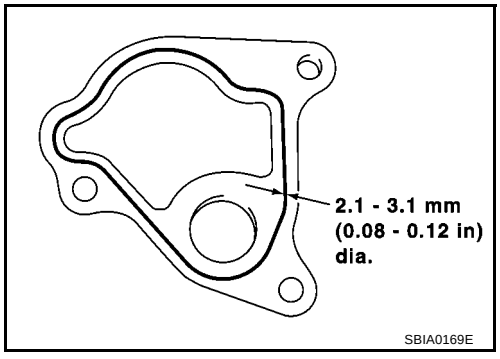

INSPECTION AFTER INSTALLATION

Check generated vacuum satisfies the specification at idle speed. Refer to EM-143, "INSPECTION BEFORE REMOVAL" .

Disassembly and Assembly

EBS00QFL

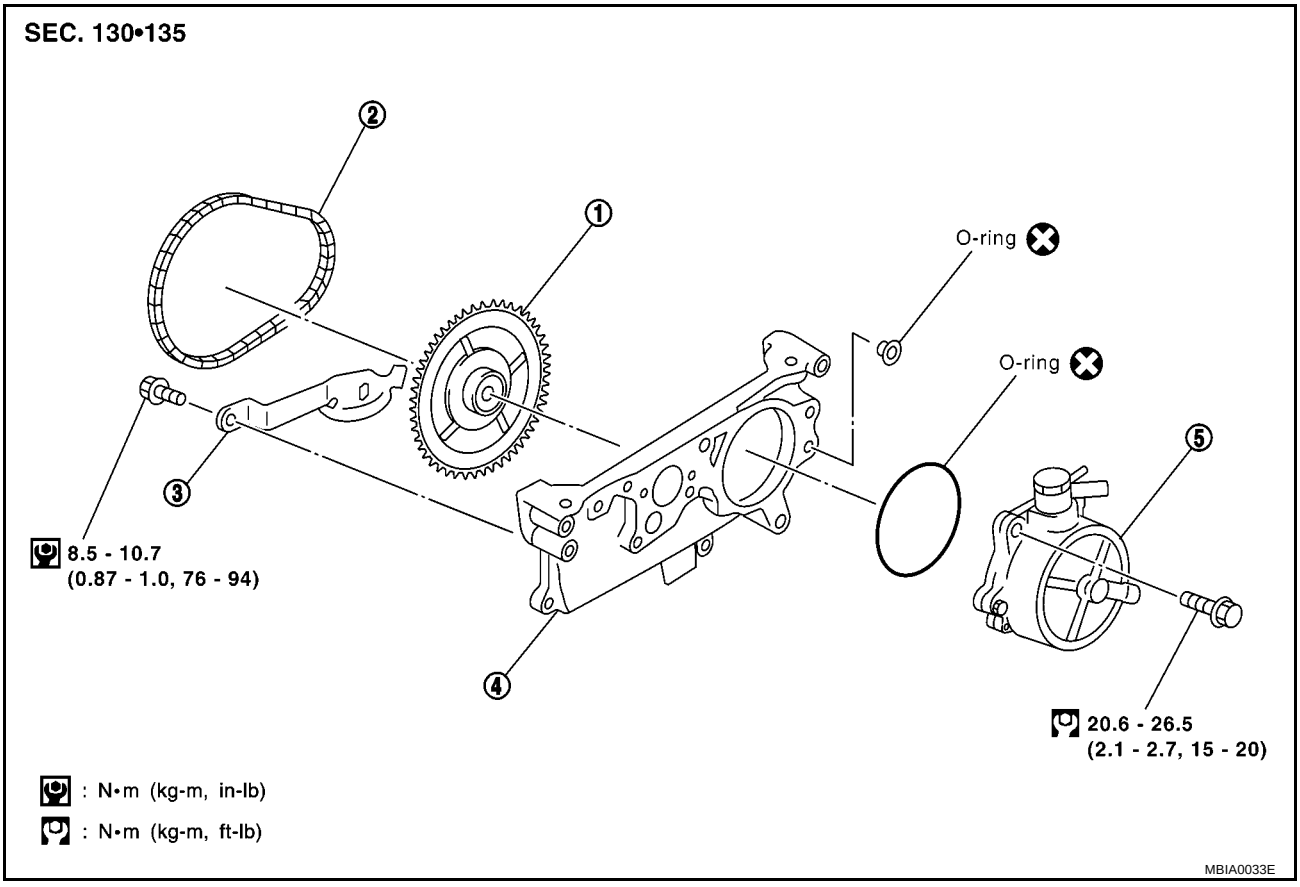

1. Rear cam sprocket
2. Drive chain
3. Chain guide
4. Cylinder head rear cover
5. Vacuum pump

DISASSEMBLY

1. Push on chain guide lightly so that clearance between chain and chain guide part reaches 0 mm (0 in). Then loosen chain guide mounting bolts.
2. Remove chain from rear cam sprocket and vacuum pump sprocket.
3. Remove rear cam sprocket.
4. Remove vacuum pump.

CAUTION:

Do not disassemble vacuum pump.

ASSEMBLY

Follow procedure below to install each part onto cylinder head rear cover.

1. Install vacuum pump.
2. Temporarily fit chain guide.

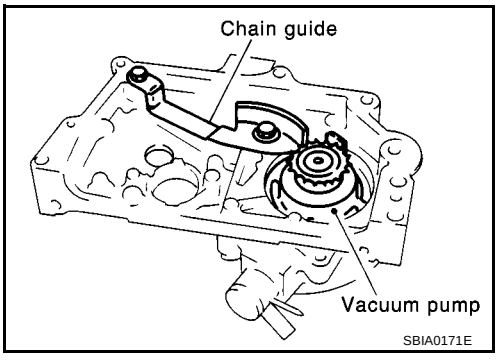

3. Install rear cam sprocket.
   - Sprocket can be installed in any direction.
4. Fit drive chain onto rear cam sprocket and vacuum pump sprocket.
5. Push on chain guide lightly so that clearance between chain and chain guide sliding part reaches 0 mm (0 in). Then tighten chain guide mounting bolts.

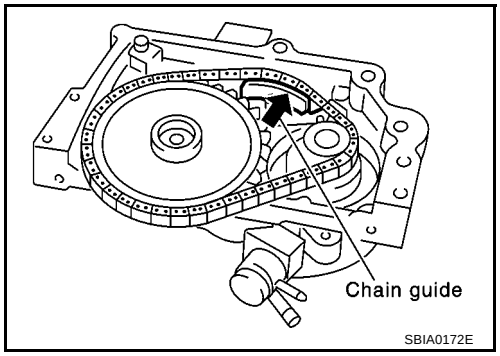

INJECTION TUBE AND FUEL INJECTOR

PFP:00018

Removal and Installation

EBS00QFM

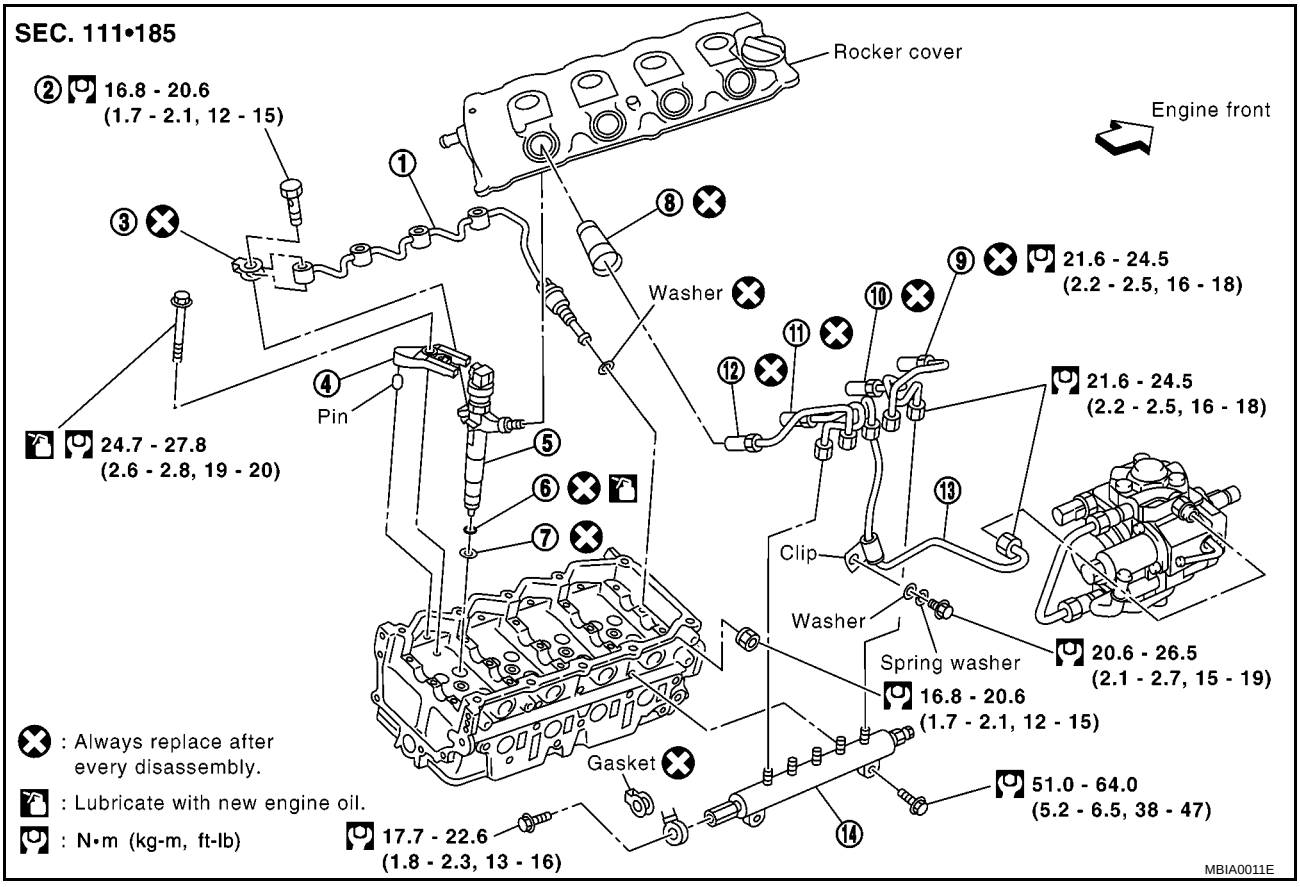

1.	Spill tube	2.	Eye-bolt	3.	Spill tube gasket
4.	Nozzle support	5.	Fuel injector	6.	O-ring
7.	Nozzle gasket	8.	Nozzle oil seal	9.	Injection tube No. 1
10.	Injection tube No. 2	11.	Injection tube No. 3	12.	Injection tube No. 4
13.	Injection tube center	14.	Fuel rail assembly		

CAUTION:
Apply new engine oil to parts marked in illustration before installation.

REMOVAL

1. Remove engine cover. Refer to EM-160, "Removal and Installation" .
2. Remove harness connector from fuel injector.
3. Remove spill hose.
4. Following steps below, remove injection tubes.

a. Put a paint mark or tag on injection tubes to identify each cylinder.
   - Use a fuel-resistant method.

b. Remove injection tubes in order of 2-1-4-3 individually.

CAUTION:
Be careful not to allow leaked fuel to contaminate engine compartment. Especially, ensure to keep engine mount insulator clear of fuel.

NOTE:
Removal procedure of fuel injector is shown right.

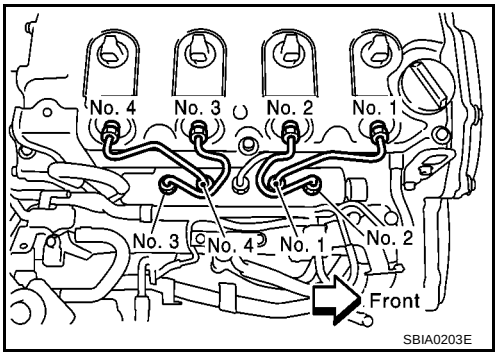

5. Remove nozzle oil seal.
   - Using a slotted screwdriver, pry flange to remove oil seal.

   NOTE:
   Nozzle oil seal seals between fuel injector and rocker cover. If only injection tube shall be removed and installed, nozzle oil seal replacement is not required.
6. Remove rocker cover. Refer to EM-160, "Removal and Installation" .

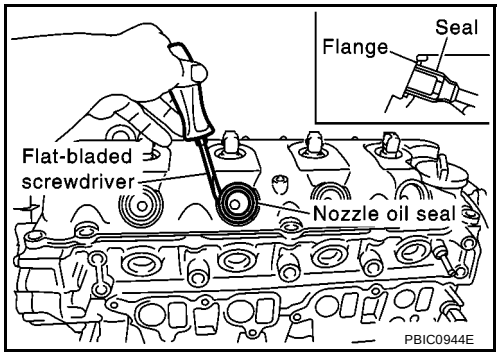

7. Remove spill tube mounting bolts and nut.
   - Loosen bolts and nut to the reverse order of the shown in the figure and remove then.
8. Following steps below, remove fuel injector.

a. Remove nozzle support.
b. Remove fuel injector. While rotating it to left and right, raise it to remove.

   CAUTION:
   - **Handle fuel injector carefully without giving any impact.**
   - **Do not disassemble fuel injector.**

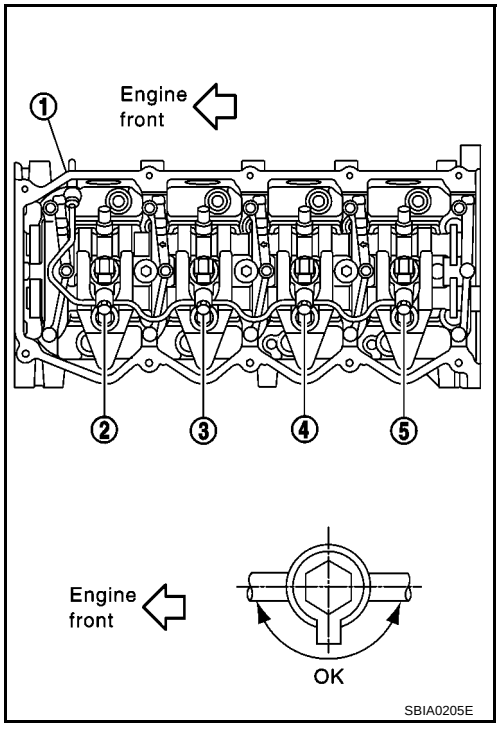

c. If nozzle gasket remains in cylinder head, hook it with tip of a slotted screwdriver and pull it out.

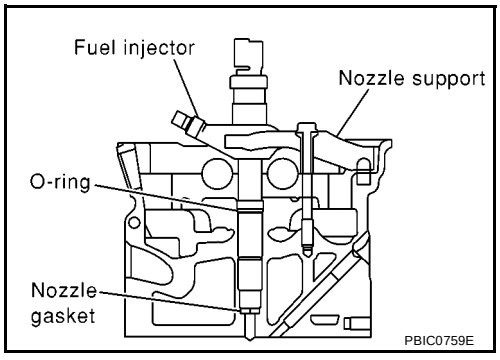

INSTALLATION

1. Following steps below, install fuel injector.

a. Install O-ring and nozzle gasket to fuel injector, and insert them into cylinder head.
b. Tighten injection tubes temporarily in the order of 3-4-1-2.
c. Be sure to fit nozzle support without looseness.
d. Tighten nozzle support bolts.
e. Loosen injection tubes in the order of 2-1- 4-3.

2. Connect spill tube.
   - Tighten fixing bolts and nut in the numerical order shown in the figure.

   NOTE:
   Connection of spill tube gasket may be broken, even if it is tightened to specified torque. It does not affect performance.

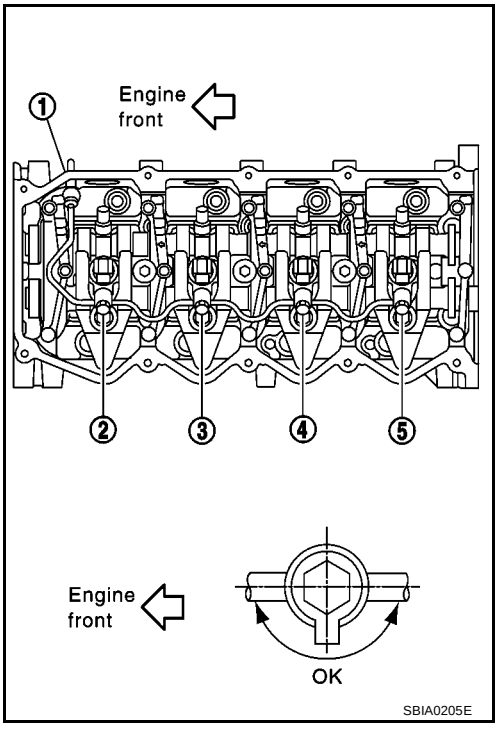

3. Carry out air tightness test for spill tube.
   - Connect a vacuum handy pump to spill connector. Check that vacuum is retained while applying following vacuum.

     Standard : – 53.3 to – 66.7 kPa (– 533 to – 667 mbar, – 400 to – 500 mmHg, –15.75 to –19.69 inHg)

   - If outside of standard, reconnect spill tube. (Replace gasket in this case.)
4. Install rocker cover. Refer to EM-160, "Removal and Installation".
5. Install nozzle oil seal.
   - Insert it straight until its flange fully contacts rocker cover.

   CAUTION:
   - **Check gutter spring in seal on fuel injector for missing.**
6. Connect injection tubes individually to each cylinder in order of 3-4-1-2.
7. Connect spill hose.
8. Install remaining parts in reverse order of removal.

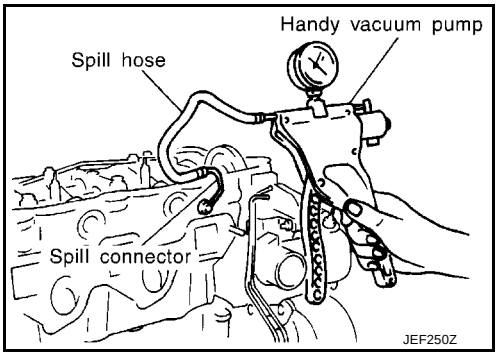

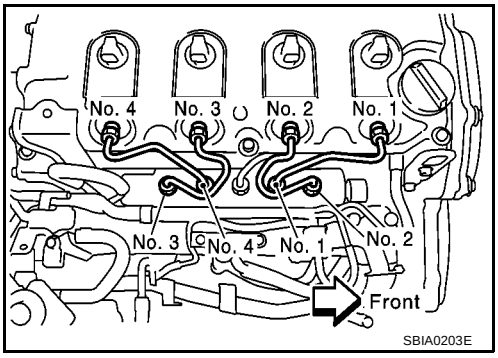

INSPECTION AFTER INSTALLATION

CONSULT-II service support has a force rail pressure increase function and can increase rail pressure to any given pressure. Check for fuel leaks visually by increasing internal pressure using this function.

FUEL PUMP

PFP:17042

Removal and Installation

EBS00QFN

CAUTION:

- **Before removing and installing fuel pump, be sure to remove sprocket. Do not loosen or remove installation nut in the center of fuel pump. If loosened or removed, replace fuel pump.**
- **After removing timing chain, do not turn crankshaft and camshaft separately, or valves will strike piston heads.**
- **When installing camshafts, chain tensioners, oil seals or other sliding parts, lubricate contacting surfaces with new engine oil.**
- **Apply new engine oil to parts marked in illustration before installation.**

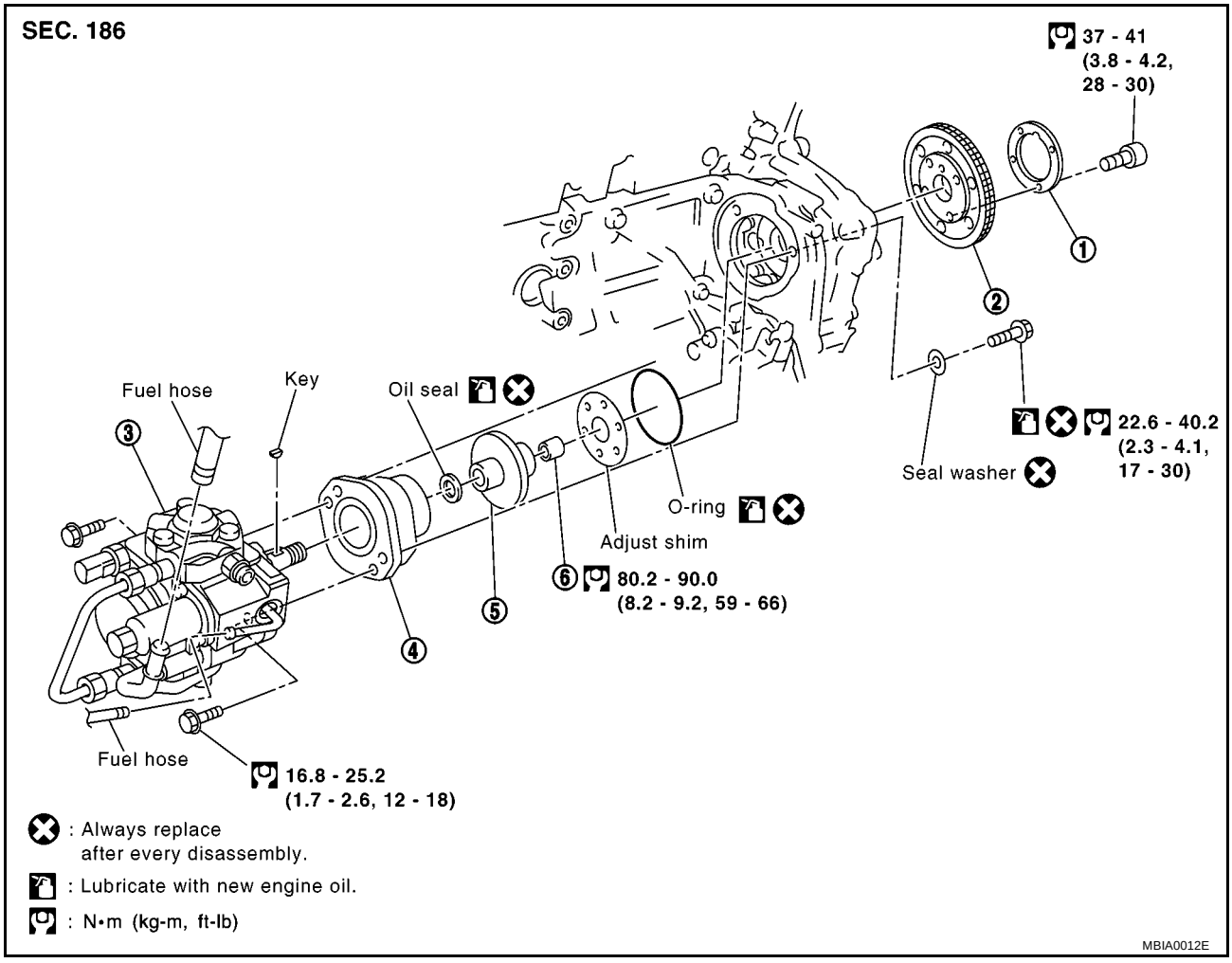

1. Washer	2. Fuel pump sprocket	3. Fuel pump
4. Spacer	5. Coupling	6. Sprocket nut

REMOVAL

1. Remove RH engine mount insulator and bracket. Refer to EM-197, "Removal and Installation" .
2. Pull power steering reservoir tank out of brackets to move power steering piping.

   CAUTION:

   To avoid removing power steering reservoir tank out of brackets move it with power steering piping aside.
3. Remove RH front wheel.
4. Remove RH splash cover (combined with undercover)
5. Remove front exhaust tube.
6. Remove fuel hoses from fuel pump.

7. Remove the harness connector from the fuel pump.
8. Remove injection tube center.
9. Remove front chain case.
   - Loosen fixing bolts in the reverse order of that shown in the figure and remove them.

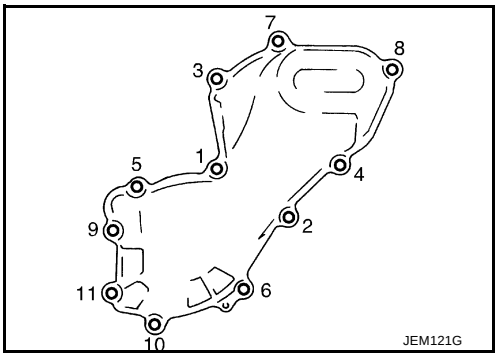

   - Remove No. 6, 10 and 11 bolts with the rubber washer as space is limited for pulling them out.

   CAUTION:
   - **While front chain case is removed, cover openings to prevent entry of foreign material into engine.**
   - **Do not remove two mass dampers on the back of cover.**

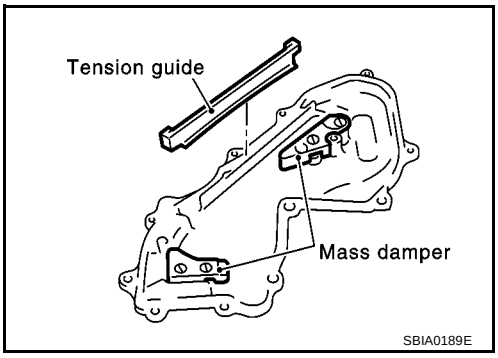

10. Set the No. 1 piston to TDC on its compression stroke.
    - Turn crankshaft pulley clockwise so that the alignment mark (punched mark) on each camshaft sprocket is positioned as shown in the figure.
    - **No position indicator is provided on the crankshaft pulley.**
    - **When installing, color coded links on the secondary timing chain can be used as alignment marks. Marking may not be necessary for removal; however, make alignment marks as required because the alignment mark on fuel pump sprocket may not be easy to see.**

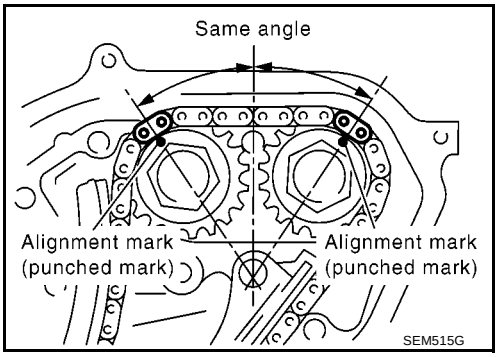

11. Remove chain tensioner.

a. Push the plunger of chain tensioner and keep it pressed with a push pin.

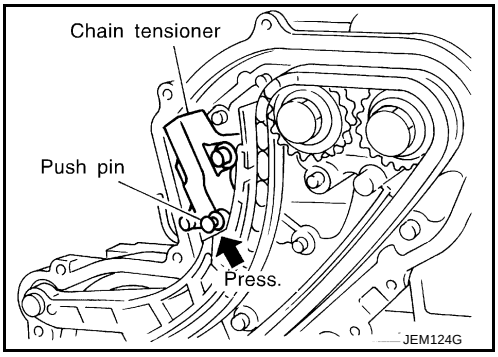

b. Using a hexagon-head wrench [face to face 5 mm (0.20 in) SST], remove bolts to remove chain tensioner.

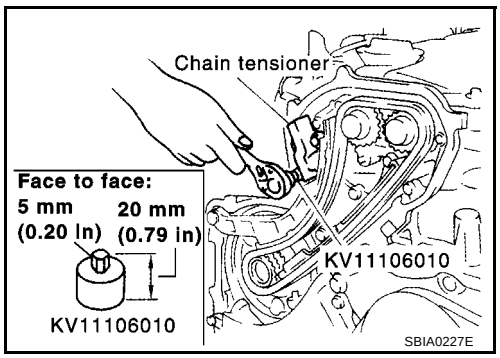

12. Remove timing chain slack guide.
    - Using a hexagon-head wrench [face to face 6 mm (0.24 in) SST], remove bolt to remove timing chain slack guide.

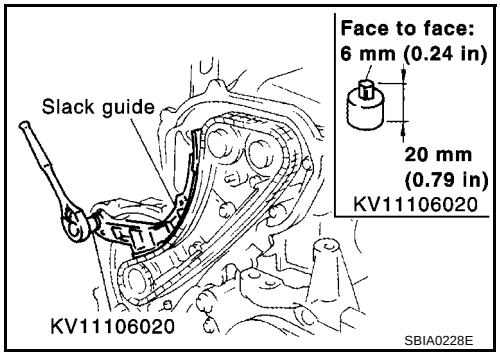

13. Remove timing chain tension guide.
14. Remove secondary timing chain.
    - Timing chain alone can be removed without removing sprockets.

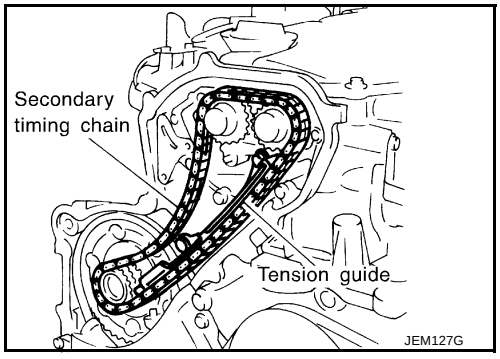

15. Hold fuel pump sprocket and remove bolt.

a. Insert positioning stopper pin (SST) into the hole 6 mm (0.24 in) in the diameter on the fuel pump sprocket.

b. Using a TORX wrench (SST), turn pump shaft little by little to adjust the position of fuel pump sprocket so that the holes align.

c. Push positioning stopper pin (SST) through pump sprocket to fuel pump spacer to hold pump sprocket.

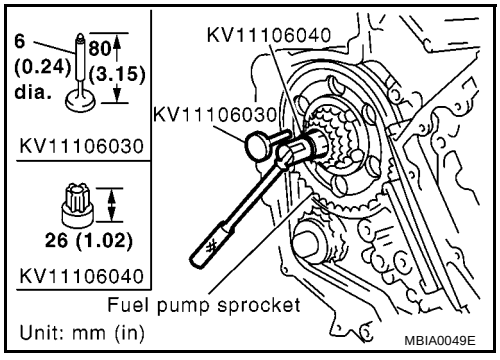

- Insert the positioning stopper pin until its flange contacts the fuel pump sprocket.
- Remove the TORX wrench (SST).

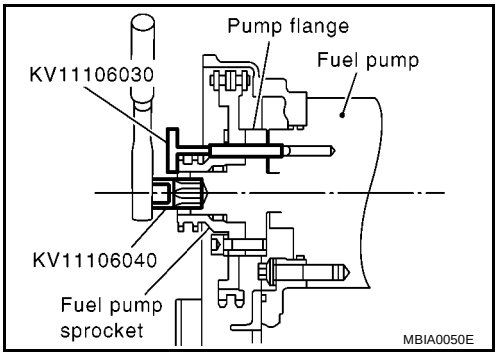

16. Using a hexagon-head wrench [face to face 6 mm (0.24 in) SST] remove tightening bolts of fuel pump sprocket and washer.

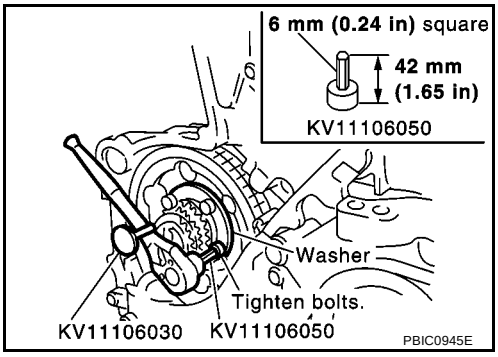

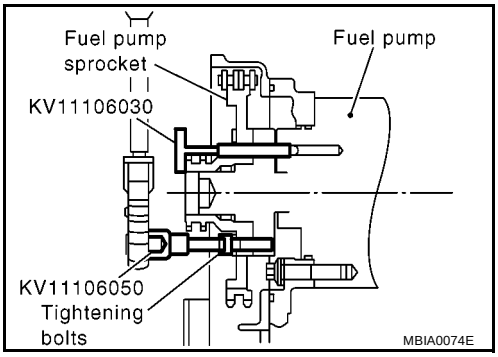

17. Using the sprocket holder (SST), hold the fuel pump sprocket to prevent falling.

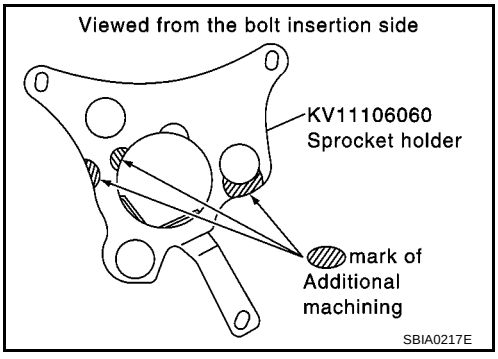

- As for the sprocket holder, install fuel pump mounting bolt through hole of KV11106060 as shown in figure.
- When the sprocket holder is installed, if the positioning stopper pin interferes, pull out the stopper pin approximately 10 mm (0.39 in), then install it.
- After the sprocket holder is installed temporarily, insert the extension bar (SST) and TORX socket in the three holes. After positioning the holes, tighten the holder mounting bolts.

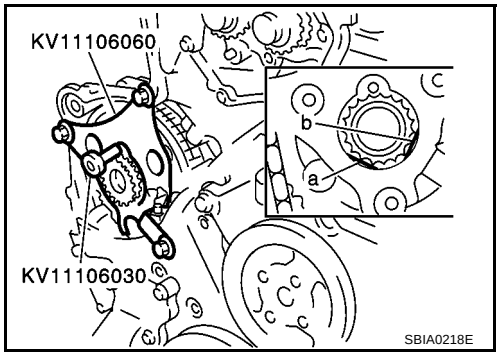

- The thread length of the sprocket holder mounting bolts should be approximately 15 mm (0.59 in).
- Make sure that the a- and b-faces of the sprocket holder contact the bottom side of the sprocket (small diameter side).

  CAUTION:
  Do not remove the sprocket holder until the fuel pump is installed.
- After the sprocket holder is installed, pull out the positioning stopper pin (SST) from the fuel pump sprocket.

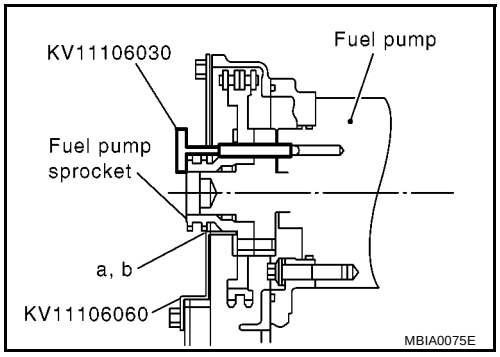

18. Using the extension bar [SST: whole length 43 mm (1.69 in)] and the TORX socket (Q6-E12: commercially available), remove the tightening bolts.

    CAUTION:
    Do not disassemble or adjust the fuel pump excepting the following.

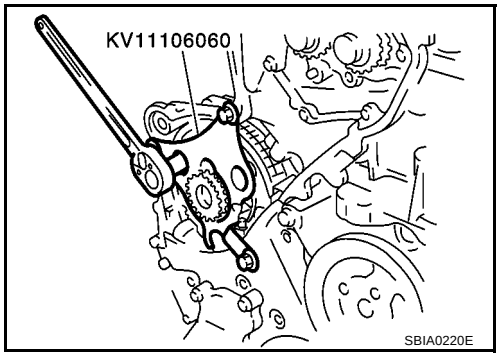

19. Remove the fuel pump toward the rear of the engine.

    NOTE:
    The seal washer of the tightening bolts cannot be reused.

    CAUTION:
    For removal, be careful not to drop the seal washer into the engine.

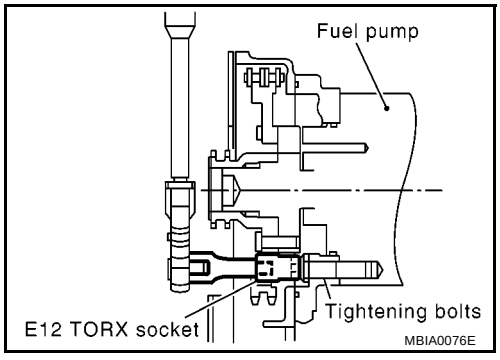

20. Remove adjusting shim.
21. Attach a suitable tool in the M8 bolt hole on coupling.
22. Loosen sprocket nut with the TORX wrench (SST).

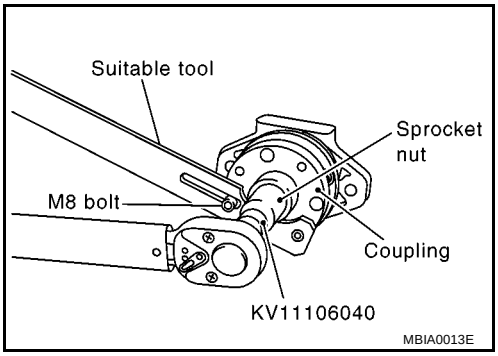

23. Remove coupling with a suitable puller.

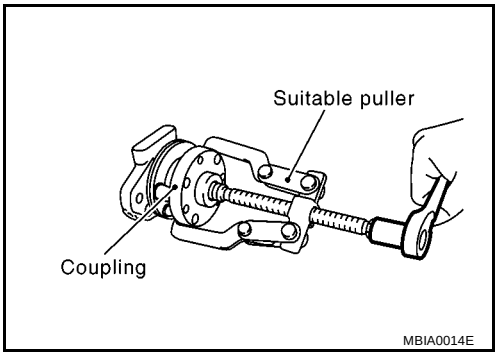

24. Remove spacer from fuel pump.

INSPECTION AFTER REMOVAL

Timing Chain

Check for cracks and excessive wear at roller links. Replace chain if necessary.

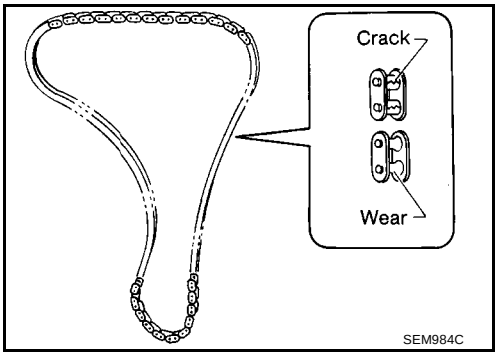

INSTALLATION

1. Install new oil seal to the spacer.
2. Install fuel pump to the spacer.

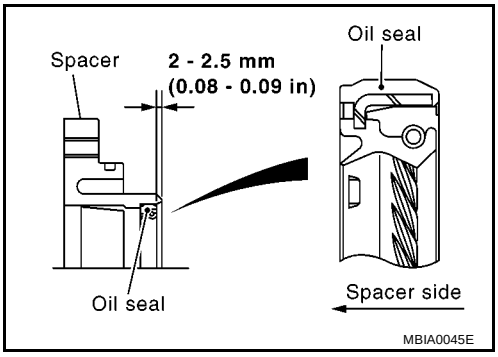

3. Install coupling to the fuel pump of spacer.
   - Using the TORX wrench (SST), tighten the sprocket nut to fix the coupling.

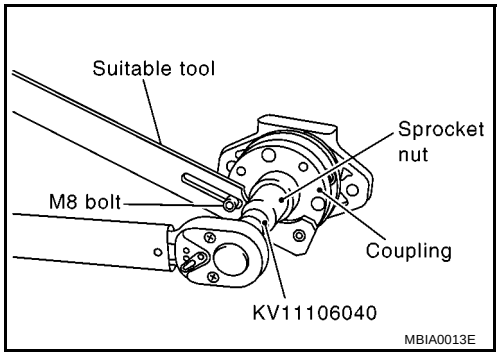

4. Install adjusting shim.
   - For shim adjustment, measure dimension L (Distance between front surface of the coupling and the fuel pump flange) at 2 opposing points near the coupling bolt center. Use the average of these two measurements to select the shim grade that marked on adjusting shim.
   - The shim adjustment is required only when the fuel pump is replaced.

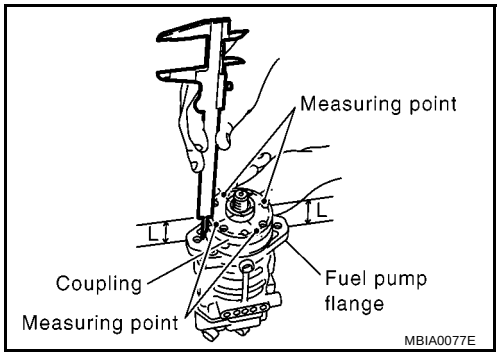

Part No. of adjusting shim	Grade number	Measuring dimension L mm (in)
16614 8H800	0.5 t	39.23 - 39.77 (1.5445 - 1.5657)
16614 8H810	1.0 t	38.76 - 39.23 (1.5260 - 1.5445)
16614 8H860	1.2 t	38.57 - 38.76 (1.5185 - 1.5260)
16614 8H820	1.6 t	38.18 - 38.57 (1.5031 - 1.5185)

5. Before the fuel pump is installed, check that the notch of its spacer and the 6 mm (0.24 in) dia. hole on the body are aligned.

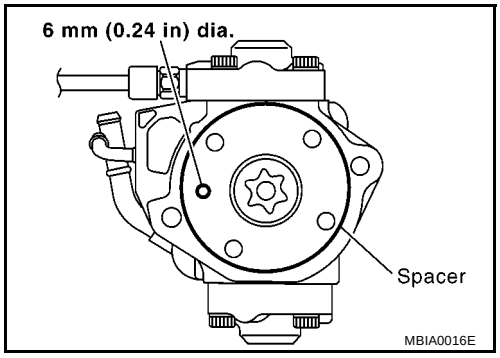

6. Insert the fuel pump to the mounting position from the rear side of the engine, and install the tightening bolts with seal washer.

   CAUTION:
   Be careful not to drop the seal washer into the engine.

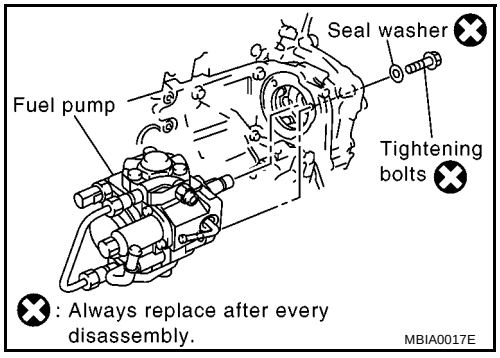

7. Using the extension bar (SST) and the TORX socket, tighten the mounting bolts of the fuel pump.
8. Remove the sprocket holder (SST).

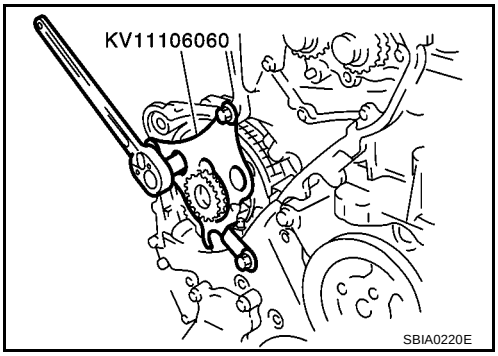

9. Using the TORX wrench (SST), turn the pump shaft gradually to adjust the position of the flange. Then, insert the positioning stopper pin (SST) to the 6 mm (0.24 in) dia. hole of the fuel pump sprocket through the pump flange and the pump body.
10. Remove the TORX wrench (SST)

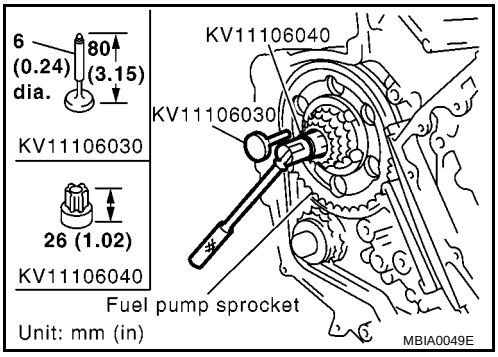

11. Using the hexagon wrench [face to face 6 mm (0.24 in) (SST)], tighten the sprocket tightening bolts.
    - When the washer of the fuel pump sprocket install it with the marking “F” facing the front of the engine.
12. Pull out the positioning stopper pin (SST).

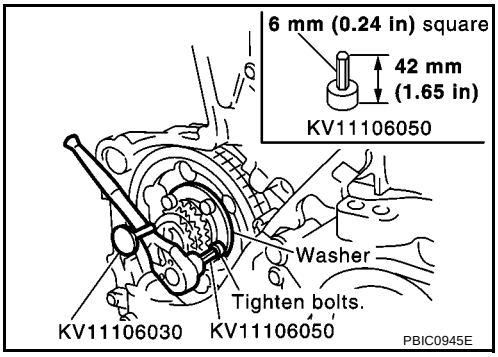

13. Install secondary timing chain.
    - When installing, match the alignment marks on sprockets with color coded alignment marks (colored links) on the chain.
14. Install timing chain tension guide.
    - The upper bolt has a longer shank than the lower bolt.

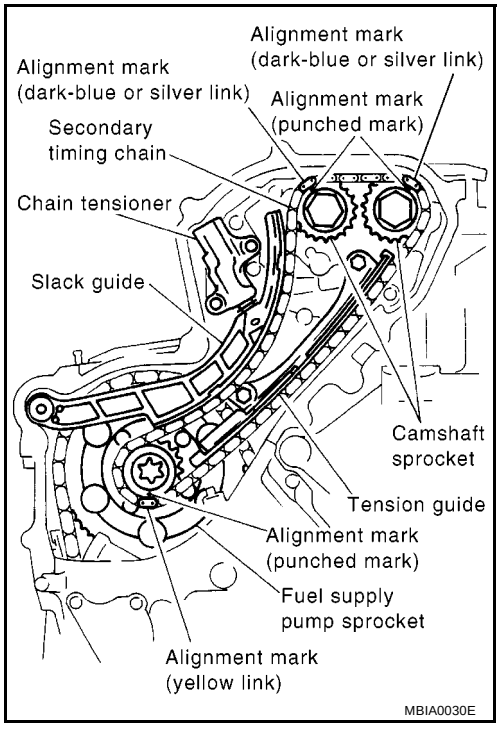

15. Using a hexagon-head wrench [face to face 6 mm (0.24 in) SST], install timing chain slack guide.

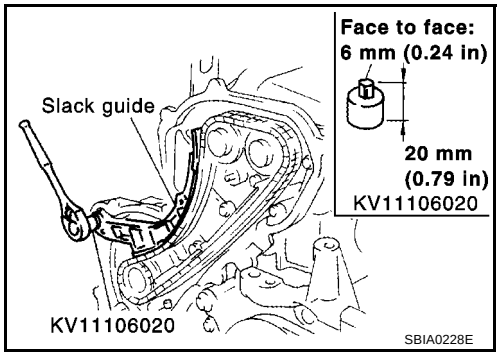

16. Install chain tensioner.

a. Push the plunger of the chain tensioner. While holding it with a push pin, install the chain tensioner.

b. Using a hexagon-head wrench [face to face 5 mm (0.20 in) SST], tighten bolts.

c. Pull out the push pin. holding the plunger.
    - **Check again that the alignment marks on the sprockets and the colored alignment marks on the timing chain are aligned.**

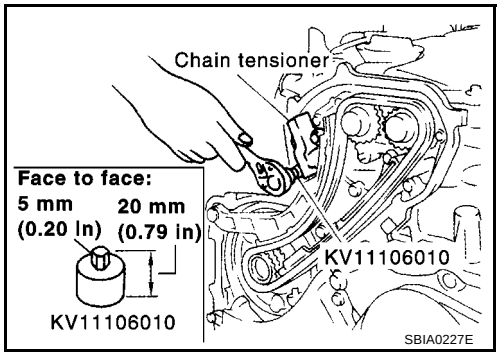

17. Install front chain case.

a. Install tension guide on the back surface of front chain case.
   - Hold front chain case vertically when installing. Tension guide may come off if front chain case is tilted.

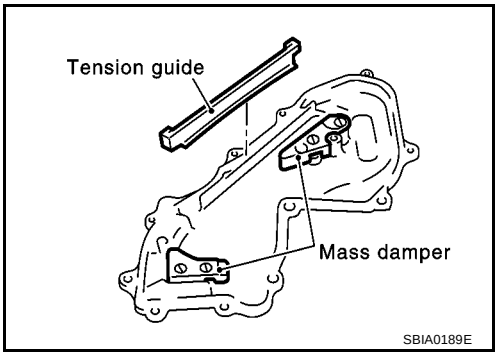

b. Apply Genuine Liquid Gasket or equivalent (Refer to EM-110, "Precautions for Liquid Gasket" .) on both ends of arched area (locations where rear chain case is adjoined) as shown in the figure.

c. Install front chain case.
   - When installing, align dowel pin on oil pump case with the pin hole.

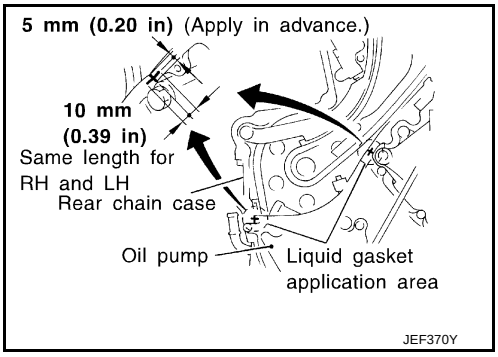

   - Install No. 6, 10 and 11 bolts with the rubber washer to the front chain case.

d. Tighten fixing bolts in the numerical order shown in the figure.

e. After tightening all the bolts, re-tighten in the same order.

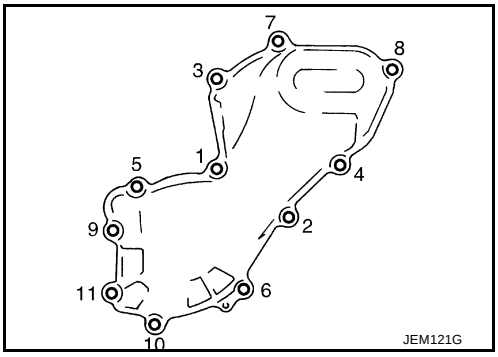

18. Install injection tube center.
19. Install the harness connector to fuel pump.
20. Install fuel hoses to fuel pump.
21. Hereafter, install in the reverse order of removal.

ROCKER COVER

PFP:13264

Removal and Installation

EBS00QFO

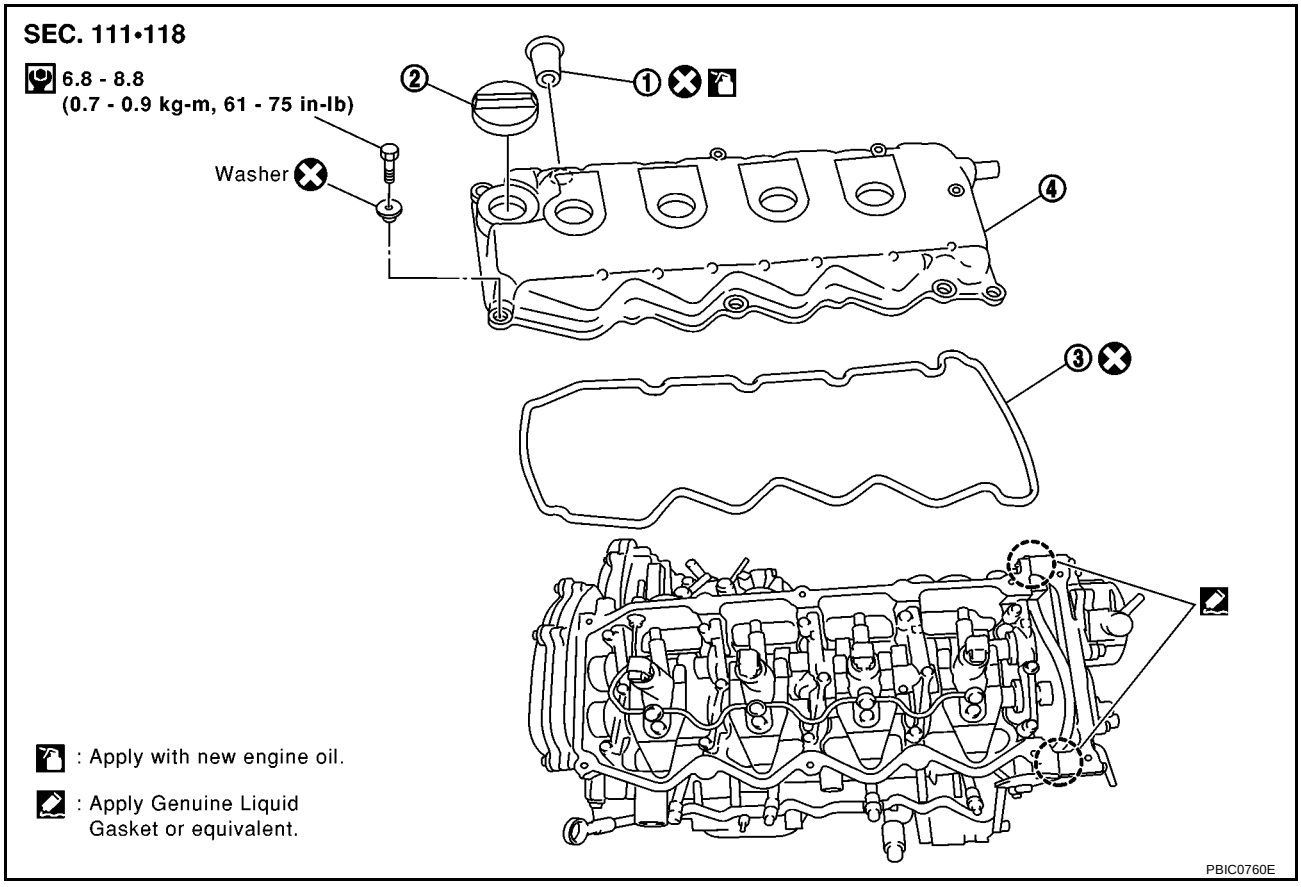

1. Nozzle oil seal
2. Oil filler cap
3. Gasket
4. Rocker cover

REMOVAL

1. Remove engine cover. Refer to the figure at right.
2. Remove harness connector from fuel injector.
3. Remove injection tube. Refer to EM-147, "Removal and Installation" .

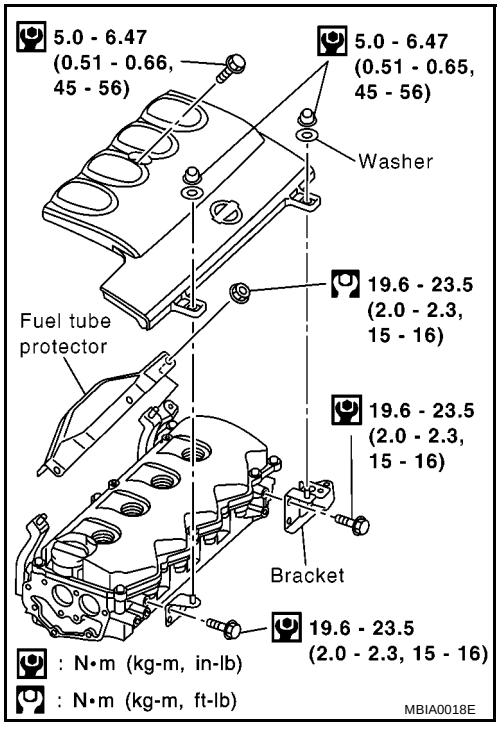

4. Remove fuel injector oil seal.
   - Using a slotted screwdriver, pry flange to remove oil seal.

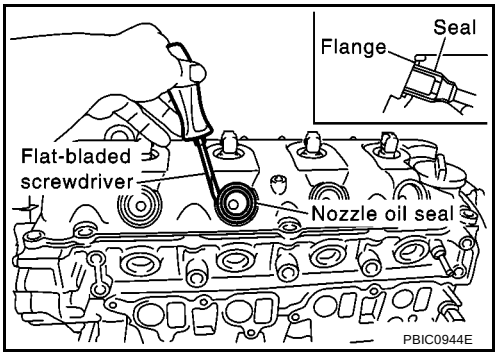

5. Remove rocker cover.
   - Loosen holding bolts in the reverse order of that shown in the figure and remove.

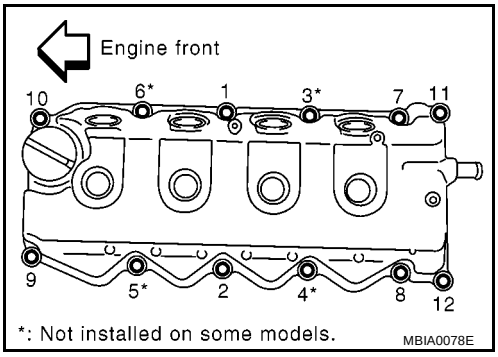

INSTALLATION

1. Apply 3.0 mm (0.118 in) dia. of Genuine Liquid Gasket or equivalent (Refer to EM-110, "Precautions for Liquid Gasket" .) on locations shown in the figure.

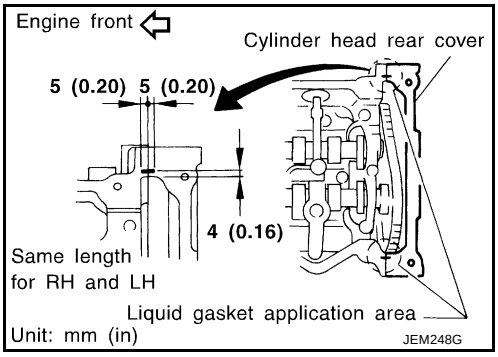

2. Tighten holding bolts in the numerical order shown in the figure.
   - Re-tighten to the same torque in the same order as above.
3. Install nozzle oil seal.
   - Insert it straight until flange fully contacts cylinder head.
4. Install remaining parts in reverse order removal.
5. Before starting engine, bleed air from fuel piping. Refer to FE-18, “Bleeding Fuel Filter”.

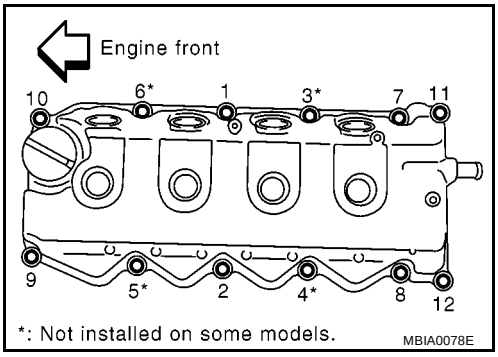

INSPECTION AFTER INSTALLATION

Start engine and increase engine speed to check for fuel leak.

CAMSHAFT

PFP:13001

Removal and Installation

EBS00QFP

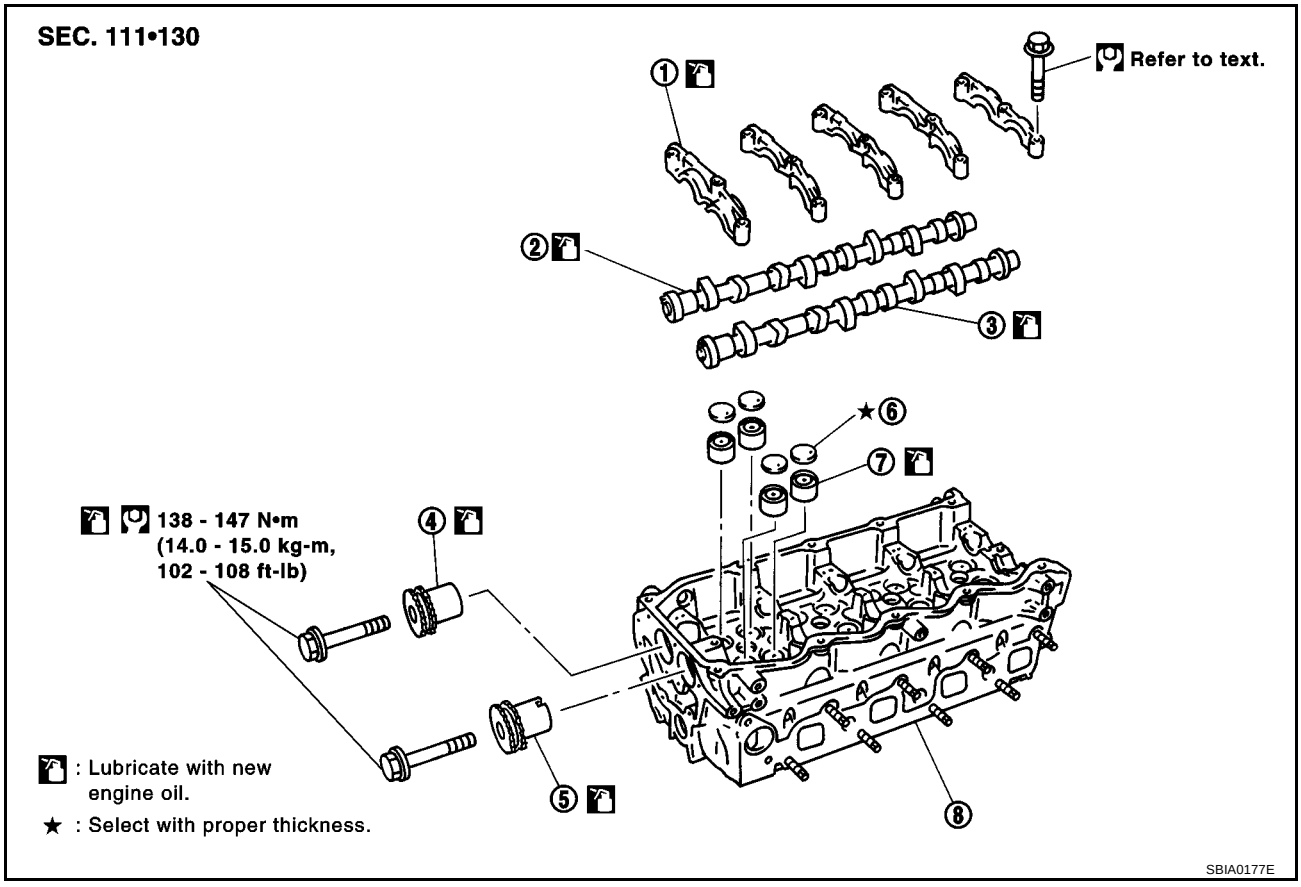

1. Camshaft bracket
2. Camshaft (right side)
3. Camshaft (left side)
4. Camshaft sprocket (right side)
5. Camshaft sprocket (left side)
6. Adjusting shim
7. Valve lifter
8. Cylinder head

CAUTION:

Apply new engine oil to parts marked in illustration before installation.

- This engine will have a different valve arrangement from normal DOHC 4-valve type engines. As both camshafts on this engine have intake and exhaust camshafts, in this chapter they are named as follows:

  Camshaft (Right side) : Intake manifold side
  Camshaft (Left side) : Exhaust manifold side

- Refer to the figure for intake and exhaust valve arrangement. (The camshafts have, alternately, either an intake valve or an exhaust valve.)

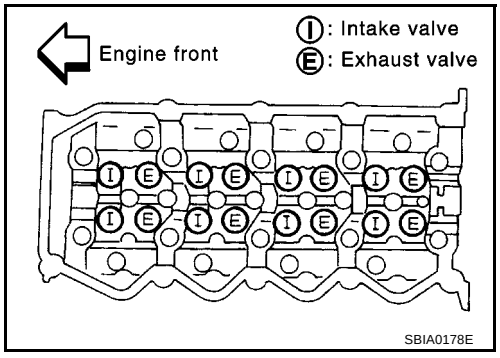

REMOVAL

1. Drain engine coolant. Refer to LC-40, “Changing Engine Coolant”.
2. Remove air duct. Refer to EM-119, "Removal and Installation" .
3. Remove rocker cover. Refer to EM-160, "Removal and Installation" .
4. Remove vacuum pump. Refer to EM-143, "Removal and Installation" .
5. Remove injection tube and fuel injector. Refer to EM-147, "Removal and Installation" .
6. Remove secondary timing chain. Refer to EM-171, "Removal and Installation" .

7. Set the No. 1 cylinder at TDC on its compression stroke.
8. Remove the camshaft stroke.
   - Loosen the camshaft gear installation bolt by fixing the hexagonal portion of the camshaft.

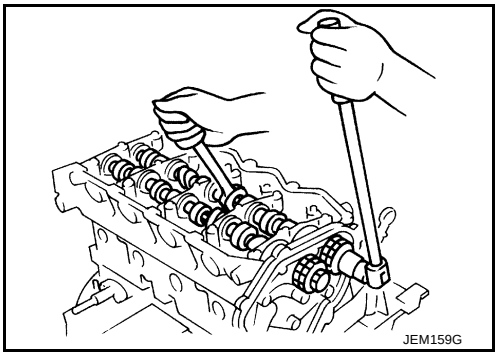
JEM159G

9. Remove the camshaft.
   - Place distinguishing marks on the right and left sides with paint.
   - Loosen and remove the installation bolt in reverse order shown in the figure.
10. Remove the adjusting shim and valve lifter.
   - Remove by taking notice of the installation position, and place outside engine in order to prevent confusion.

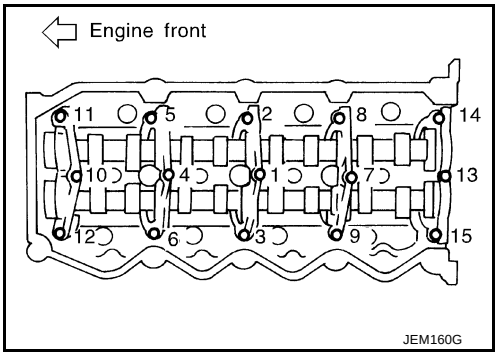

JEM160G

INSPECTION AFTER REMOVAL

Visual Check of Camshaft

- Check the camshaft for one sided wear or scratches.
- Replace the camshaft if there are abnormalities.

Camshaft Runout

- Prepare V-block on a flat surface and secure camshaft journals No. 2 and No. 5.
- Set the dial gauge vertically on journal No. 3.
- Rotate camshaft in one direction by hand, then read needle movement on dial indicator. (Total indicator reading)

Limit : 0.02 mm (0.0008 in)

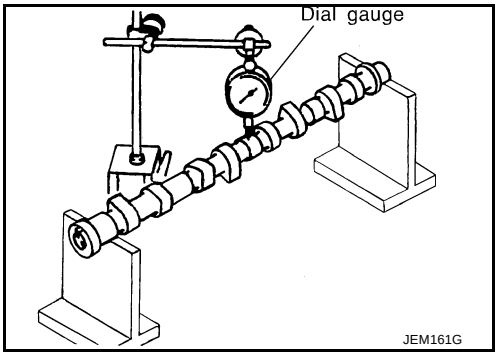

JEM161G

Height of Cam Nose

Measure by using a micrometer.

Standard:

Intake : 39.505 - 39.695 mm (1.5553 - 1.5628 in)

Exhaust : 39.905 - 40.095 mm (1.5711 - 1.5785 in)

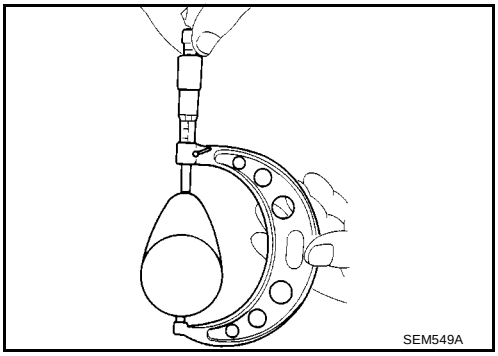
SEM549A

Camshaft Oil Clearance

Measure by using a micrometer.

Camshaft journal outer diameter:

Standard:

No. 1	**: 30.435 - 30.455 mm (1.1982 - 1.1990 in)**
No. 2, 3, 4, 5	**: 23.935 - 23.955 mm (0.9423 - 0.9431 in)**

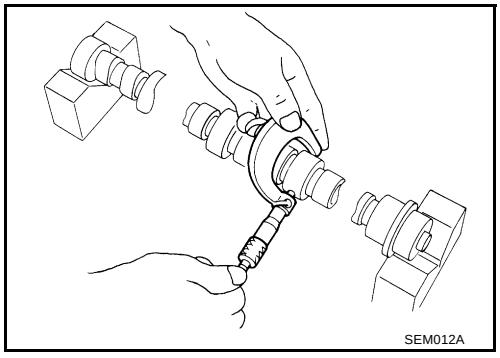

Camshaft Bracket Inner Diameter

- Install camshaft bracket and tighten bolts to the specified torque.
- Measure inner diameter of camshaft bracket using an inside micrometer.

Camshaft bracket inner diameter:

Standard:

No. 1	**: 30.500 - 30.521 mm (1.2008 - 1.2016 in)**
No. 2, 3, 4, 5	**: 24.000 - 24.021 mm (0.9449 - 0.9457 in)**

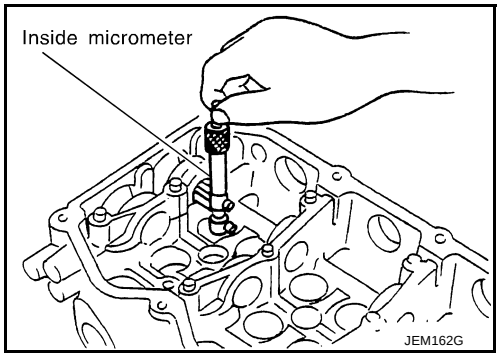

Camshaft Oil Clearance Calculations

(Oil clearance) = (Camshaft bracket inner diameter) – (Camshaft journal outer diameter)

Standard : 0.045 - 0.086 mm (0.0018 - 0.0034 in)

- If it exceeds the standard value, refer to the standard value of each unit, then replace the camshaft and/or cylinder head.

NOTE:
As the camshaft bracket is manufactured with the cylinder head, it is impossible to replace only the camshaft bracket.

Camshaft End Play

- Set the dial gauge to the front end of the camshaft. Measure the end play by moving the camshaft in the direction of the axle.

Standard : 0.070 - 0.148 mm (0.0028 - 0.0058 in)
Limit : 0.24 mm (0.0094 in)

- If end play exceeds the limit, replace camshaft and measure camshaft end play again.
- If end play still exceeds the limit after replacing camshaft, replace cylinder head.

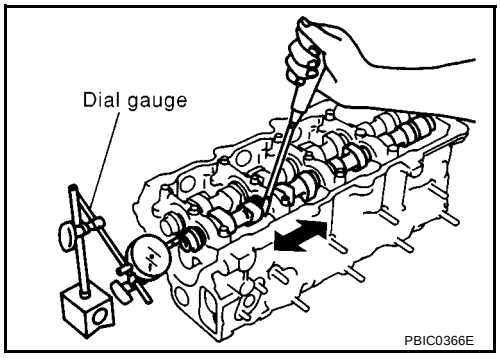

Camshaft Sprocket Runout

1. Install sprocket on camshaft.
2. Measure camshaft sprocket runout.

   Runout (Total indicator reading):
   : Less than 0.15 mm (0.0059 in)

3. If it exceeds the limit, replace camshaft sprocket.

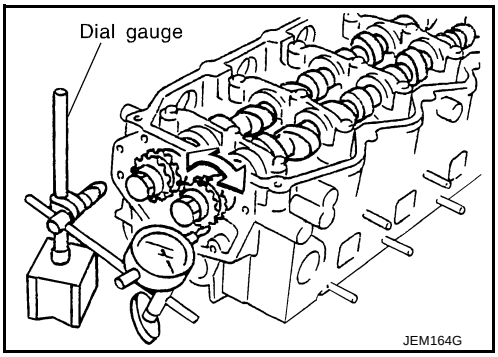

Visual Inspection of Valve Lifter and Adjusting Shim

- Check lifter side for any signs of wear or damage. Replace if there are any abnormalities.
- Check cam nose contact and sliding surfaces for wear and scratches. Replace if there are any abnormalities.

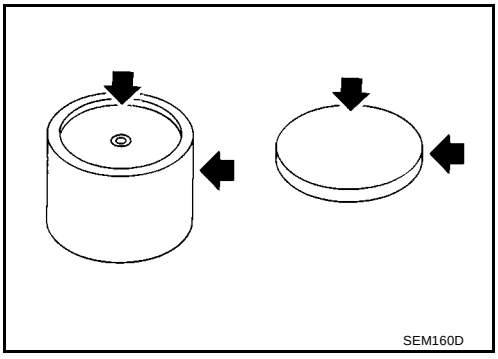

Valve Lifter Outer Diameter

Measure the outer diameter of the valve lifter with a micrometer.

Standard : 29.960 - 29.975 mm (1.1795 - 1.1801 in)

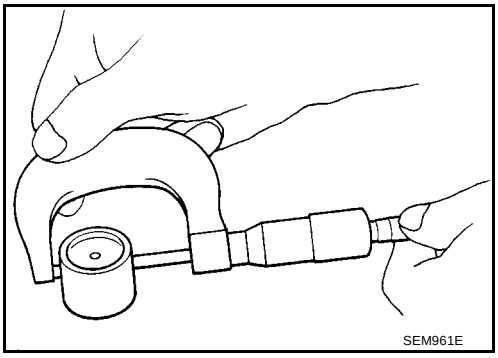

Valve Lifter Bore Diameter

Measure the bore diameter of the cylinder head valve lifter with an inside micrometer.

Standard : 30.000 - 30.021 mm (1.1811 - 1.1819 in)

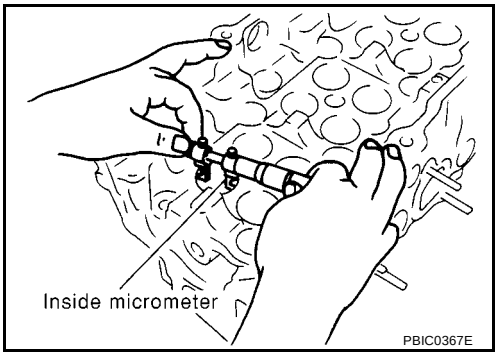

Valve Lifter Clearance Calculations

(Clearance) = (Valve lifter bore diameter) – (Valve lifter outer diameter)

Standard : 0.025 - 0.061 mm (0.0010 - 0.0024 in)

If it exceeds the standard value, refer to the outer diameter and bore diameter standard values and replace valve lifter and/or cylinder head.

INSTALLATION

1. Install the valve lifter and adjusting shim.
   - Make sure that these are installed in the same position as before the removal process.
2. Install the camshaft.
   - Identify camshafts by the paint position and screw hole at the rear end.

     Camshaft RH : Paint is at position A without screw hole.

     Camshaft LH : Paint is at position B with screw hole.

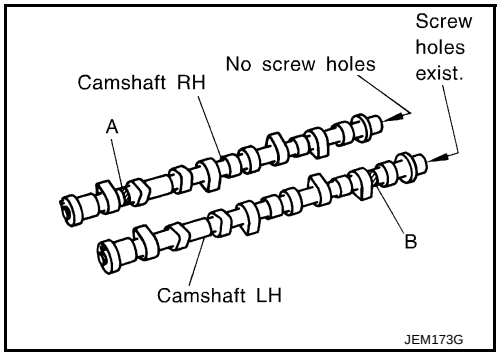

   - Install so that dowel pins are positioned in the directions shown in the figure.

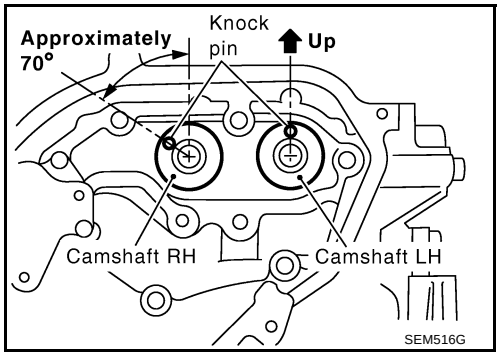

3. Install camshaft brackets.
   - Install correctly, identifying brackets by the journal No. and front mark on top surface.

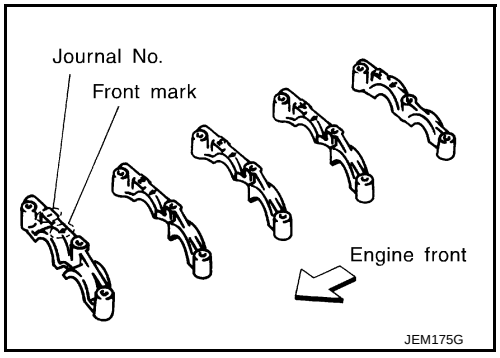

4. Tighten bolts in the order shown in the figure according to the following procedure:

a. Tighten to 1.96 N·m (0.2 kg-m, 17 in-lb).
   - Make sure camshaft thrusting parts (on rear side) securely fit in their mating parts on the cylinder head.

b. Tighten to 5.88 N·m (0.6 kg-m, 52 in-lb).

c. Tighten to 12 to 13 N·m (1.2 to 1.4 kg-m, 9 to 10 ft-lb).

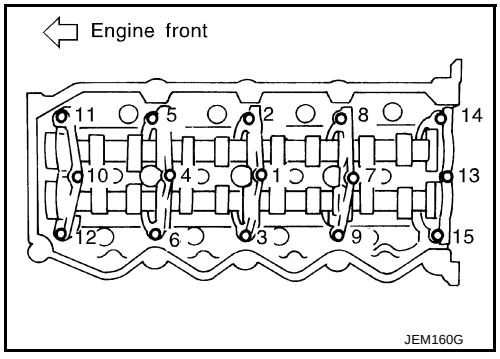

5. Install camshaft sprockets.
   - Camshaft sprockets are commonly used for RH and LH.
   - Align camshaft sprocket and dowel pin on camshaft, and install.
   - Holding the hexagonal part of camshaft with a wrench, tighten bolt securing camshaft sprocket.
6. Before installing spill tube after installing secondary timing chain, check and adjust valve clearance. Refer to EM-167, "Valve Clearance" .
7. Hereafter, install in the reverse order of removal.

Valve Clearance

EBS00QFQ

INSPECTION

- When the camshaft or parts in connection with valves are removed or replaced, and a malfunction has occurred (poor starting, idling, or other malfunction) due to the mis adjustment of the valve clearance, inspect as follows.
- Inspect and adjust when the engine is cool (at normal temperature).
- Be careful of the intake and exhaust valve arrangement. The valve arrangement is different from that in a normal engine.

  NOTE:
  The camshafts have, alternately, either an intake valve or an exhaust valve. (Refer to illustration)

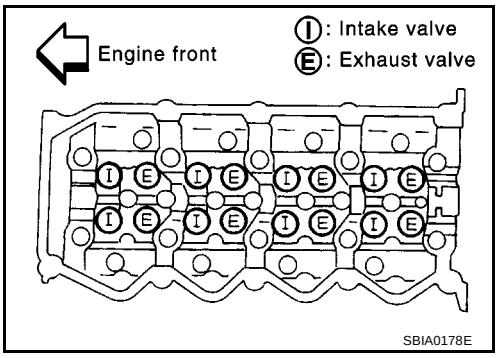

1. Drain engine coolant. Refer to LC-40, “Changing Engine Coolant”.
2. Remove air duct and air inlet pipe. Refer to EM-119, "Removal and Installation" .
3. Remove rocker cover. Refer to EM-160, "Removal and Installation" .
4. Remove vacuum pump. Refer to EM-143, "Removal and Installation" .
5. Remove injection tube and fuel injector. Refer to EM-147, "Removal and Installation" .
6. Remove secondary timing chain. Refer to EM-171, "Removal and Installation"

Check valve clearance while engine is cold and not running.

7. Set the No. 1 piston to TDC on its compression stroke.
   - Turn crankshaft pulley clockwise so that the knock pin on camshaft LH faces straight above. (No position indicator, etc. is provided on the crankshaft pulley.)

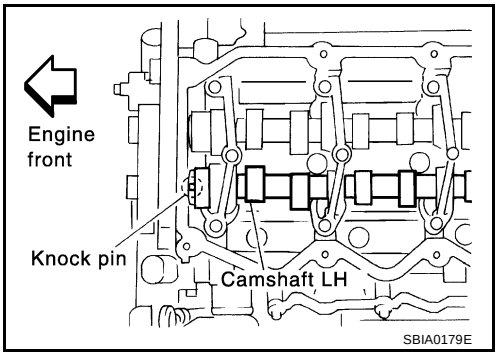

8. Put an alignment mark with paint, etc. on the crankshaft pulley and on the oil pump as an angle indicator.

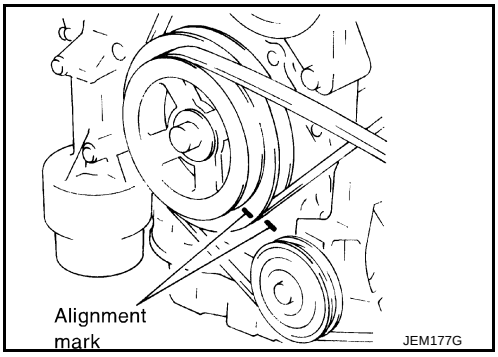

9. While referring to the figure, measure the valve clearance marked in the table below.

Measuring point	No. 1		No. 2		No. 3		No. 4	
	INT	EXH	INT	EXH	INT	EXH	INT	EXH
When the No. 1 cylinder is in the TDC	X	X	X			X		

- The injection order is 1-3-4-2.

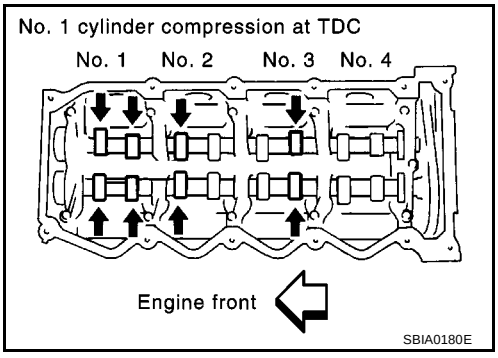

- Measure the valve clearance using a fine feeler gauge when the engine is cool (at normal temperature).

Valve clearance (Cold):

Standard:

Intake : 0.24 - 0.32 mm (0.0094 - 0.0126 in)

Exhaust : 0.26 - 0.34 mm (0.0102 - 0.0134 in)

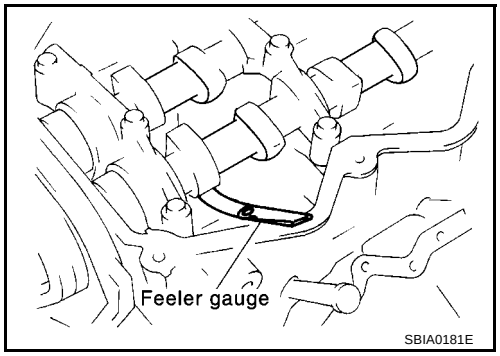

10. Set the No. 4 cylinder at TDC by rotating the crankshaft clockwise once.

11. While referring to the figure, measure the valve clearance marked in the table below.

Measuring point	No. 1		No. 2		No. 3		No. 4	
	INT	EXH	INT	EXH	INT	EXH	INT	EXH
When the No. 4 cylinder is in the TDC				X	X		X	X

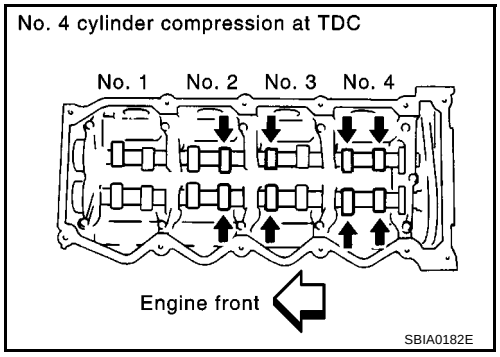

12. If the valve clearance is outside the specification, adjust as follows.

ADJUSTMENTS

- Remove the adjusting shim for parts which are outside the specified valve clearance.

1. Remove the spill tube. Refer to EM-147, "Removal and Installation" .
2. Extract the engine oil on the upper side of the cylinder head (for the air blowing in step 7).
3. Rotate the crankshaft to face the camshaft for adjusting shims that are to be removed upward.

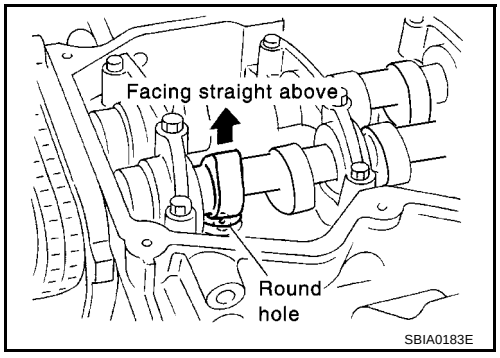

4. Grip the camshaft with camshaft pliers, them using the camshaft as a support point, push the adjusting shim downward to compress the valve spring.

CAUTION:

Do not damage the camshaft, cylinder head and the outer circumference of the valve lifter.

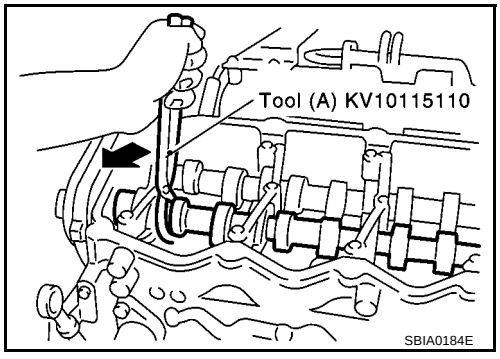

5. With the valve spring in a compressed state, remove the camshaft pliers by securely setting the outer circumference of the valve lifter with the end of the lifter stopper.
   - Hold the lifter stopper by hand until the shim is removed.

   CAUTION:
   Do not retrieve the camshaft pliers forcefully, as the camshaft will be damaged.

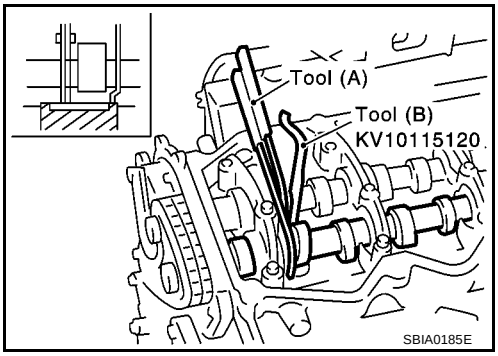

6. Move the rounded hole of the adjusting shim to the front with a very thin screwdriver or like that.
   - When the adjusting shim on the valve lifter will not rotate smoothly, restart from step 4 to release the end of the lifter stopper from touching the adjusting shim.
7. Remove the adjusting shim from the valve lifter by blowing air through the rounded hole of the shim with an air gun.

   CAUTION:
   To prevent any remaining oil from being blown around, thoroughly wipe the area clean and wear protective goggles.

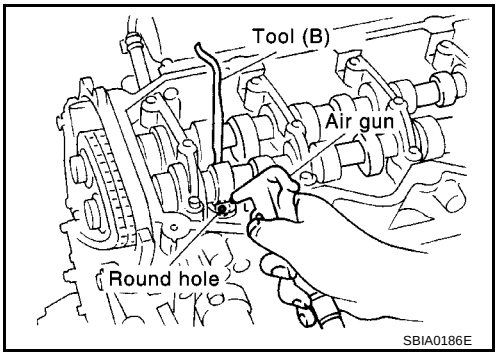

8. Remove the adjusting shim by using a magnetic hand.

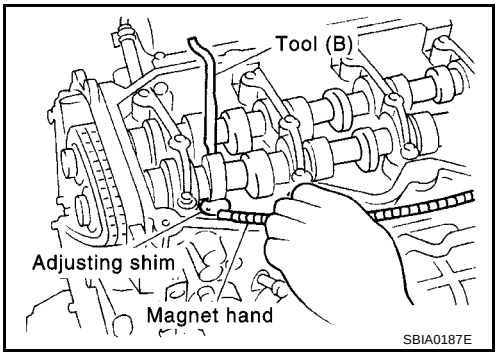

9. Measure the thickness of the adjusting shim using a micrometer.
   - Measure near the center of the shim (the part that touches the camshaft).
10. Select the new adjusting shim from the following methods.

    Calculation method of the adjusting shim thickness:

    R = Thickness of removed shim

    N = Thickness of new shim

    M = Measured valve clearance

    Intake

    N = R + [M - 0.28 mm (0.0010 in)]

    Exhaust

    N = R + [M - 0.30 mm (0.0118 in)]

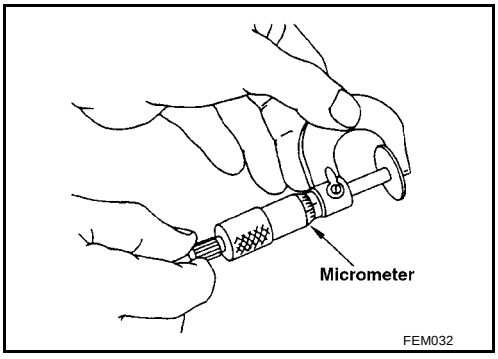

- New adjusting shims have the thickness stamped on the rear side.

Stamped mark	Shim thickness mm (in)
2.10	2.10 (0.0827)
2.12	2.12 (0.0835)
.	.
.	.
.	.
2.74	2.74 (0.1079)

- **Shims are available in 33 size from 2.10 mm (0.0827 in) to 2.74 mm (0.1079 in), in steps of 0.02 mm (0.0008 in).**

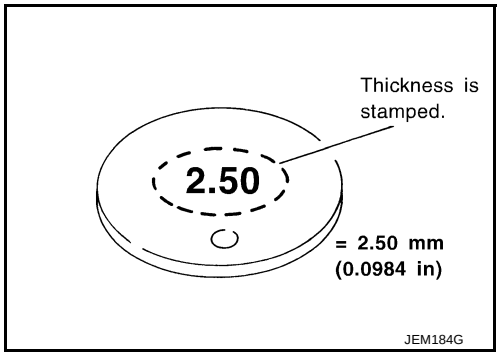

11. Fit the selected adjusting shim to the valve lifter.

    CAUTION:
    Place the stamped side of the adjusting shim to the valve lifter.

12. Compress the valve spring using the camshaft pliers and remove the lifter stopper.
13. Rotate the crankshaft 2 to 3 turns by hand.
14. Confirm that the valve clearance is within the specification.

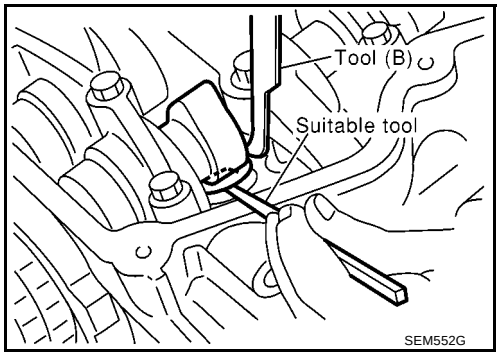

Valve clearance:

Item	Cold	Hot* (Reference data)
Intake	0.24 -0.32 (0.0094 - 0.0126)	0.274 - 0.386 (0.0108 - 0.0152)
Exhaust	0.26 - 0.34 (0.0102 - 0.0134)	0.308 - 0.432 (0.0121 - 0.0170)

*: Approximately 80°C (176°F)

15. Install remaining parts in reverse order of removal.

SECONDARY TIMING CHAIN

PFP:13028

Removal and Installation

EBS00QFR

CAUTION:

- **After removing timing chain, do not turn crankshaft and camshaft separately, or valves will strike piston heads.**
- **When installing camshafts, chain tensioners, oil seals or other sliding parts, lubricate contacting surfaces with new engine oil.**
- **Apply new engine oil to parts marked in illustration before installation.**

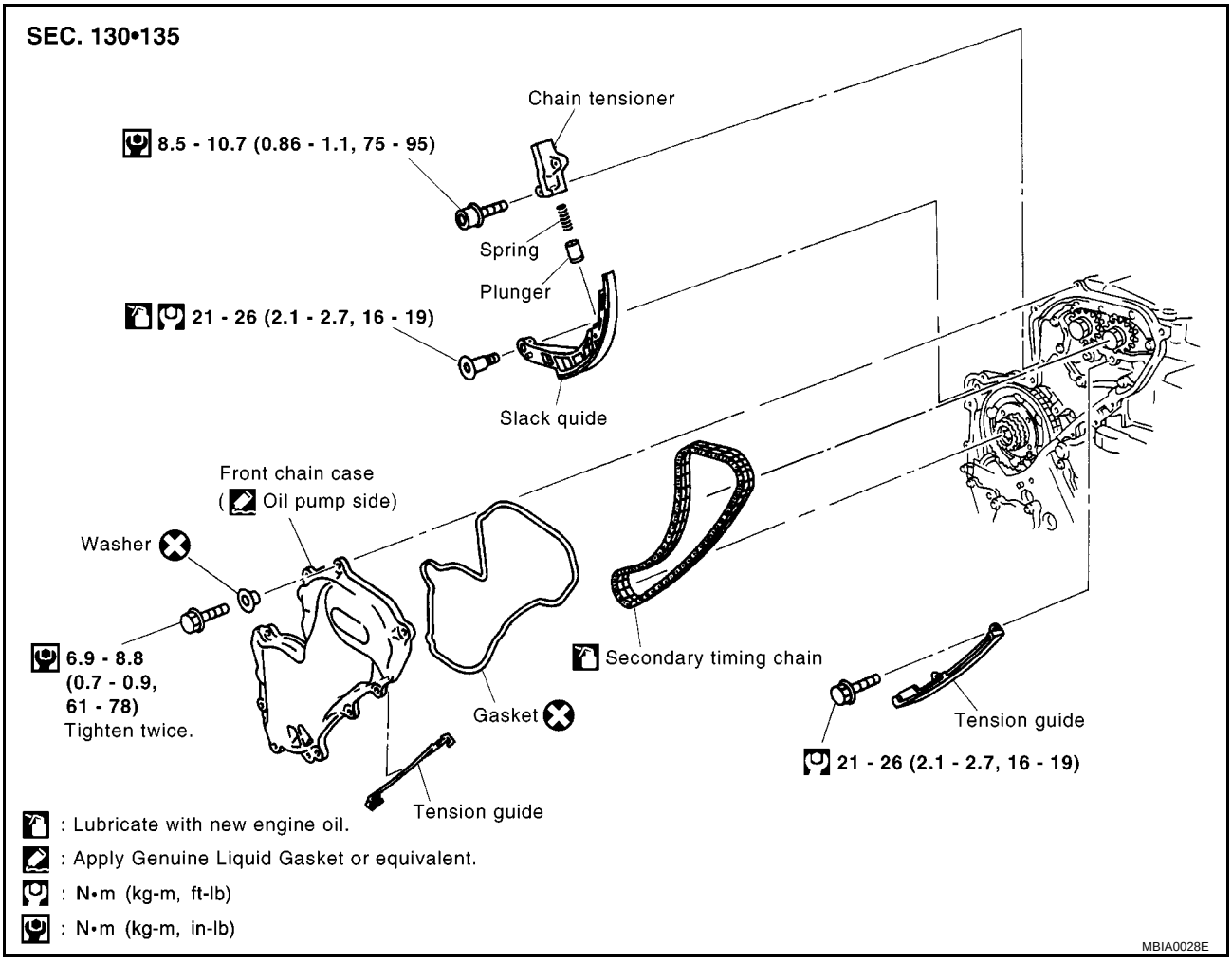

REMOVAL

- For preparative work for removing/installing secondary timing chain to remove/install fuel pump. Refer to EM-150, "FUEL PUMP" .
- To prepare for removing/installing secondary timing chain to remove/install camshaft. Refer to EM-162, "Removal and Installation" .

1. Remove RH engine mount insulator and bracket. Refer to EM-197, "Removal and Installation" .
2. Pull power steering reservoir tank out of brackets to move power steering piping.

   CAUTION:
   To avoid removing power steering reservoir tank out of brackets move it with power steering piping aside.

3. Remove front chain case.
   - Move power steering fluid reservoir tank from the bracket.
   - Loosen fixing bolts in the reverse order of that shown in the figure and remove them.
   - Remove No. 6, 10 and 11 bolts with the rubber washer as space is limited for pulling them out.

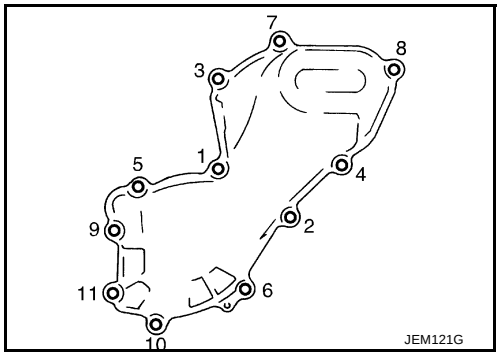

CAUTION:
- **While front chain case is removed, cover openings to prevent entry of foreign material into engine.**
- **Do not remove two mass dampers on the back of cover.**

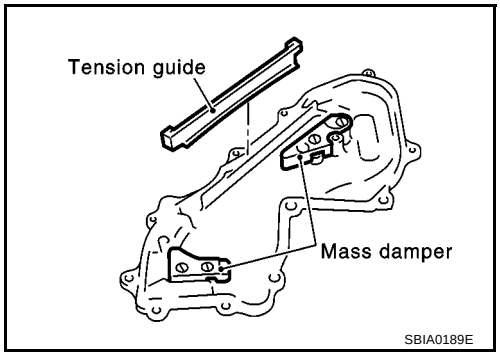

4. Set the No. 1 piston to TDC on its compression stroke.
   - Turn crankshaft pulley clockwise so that the alignment mark (punched mark) on each camshaft sprocket is positioned as shown in the figure.
   - **No position indicator is provided on the crankshaft pulley.**
   - **When installing, color coded links on the secondary timing chain can be used as alignment marks. Marking may not be necessary for removal; however, make alignment marks as required because the alignment mark on fuel supply pump sprocket may not be easy to see.**

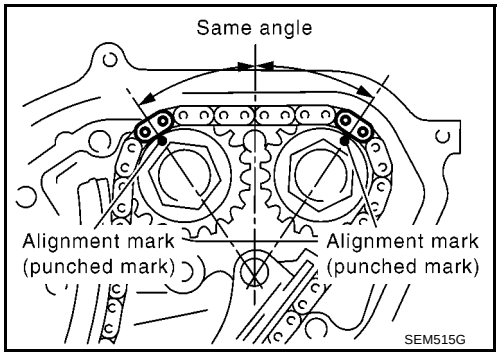

5. Remove chain tensioner.

a. Push the plunger of chain tensioner and keep it pressed with a push pin.

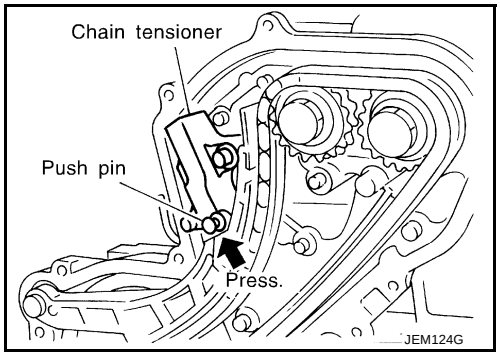

b. Using a hexagon-head wrench [face to face 5 mm, (0.20 in) SST], remove bolts to remove chain tensioner.

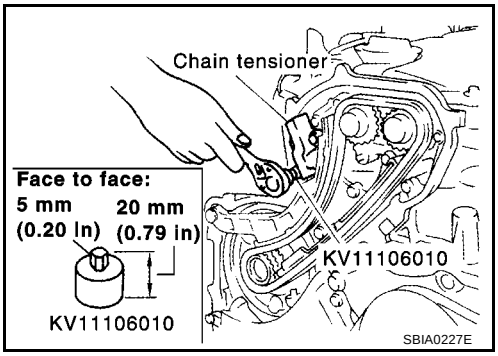

6. Remove timing chain slack guide.
   - Using a hexagon-head wrench [face to face 6 mm (0.24 in) SST], remove bolt to remove timing chain slack guide.

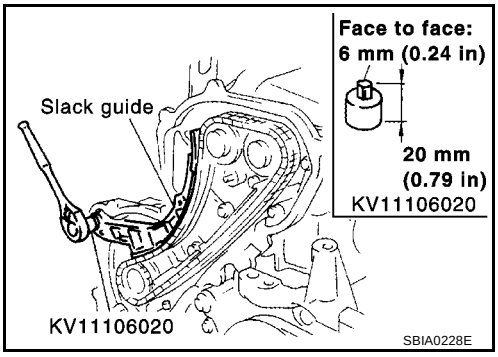

7. Remove timing chain tension guide.
8. Remove secondary timing chain.
   - Timing chain alone can be removed without removing sprockets.

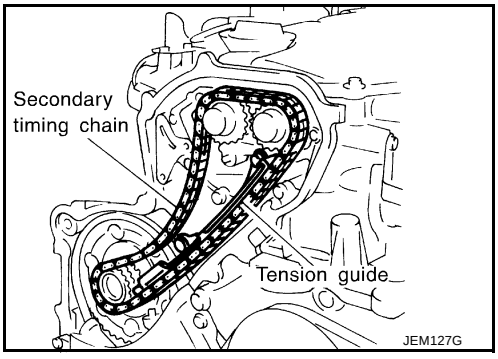

INSPECTION AFTER REMOVAL

Timing Chain

Check for cracks and excessive wear at roller links. Replace chain if necessary.

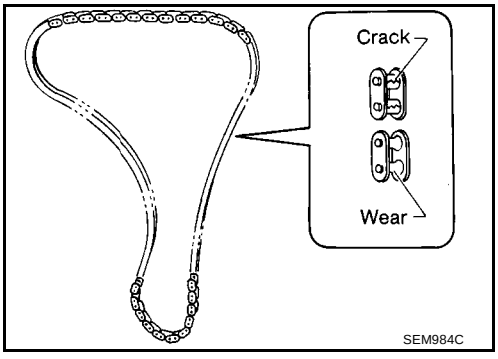

INSTALLATION

1. Install secondary timing chain.
   - When installing, match the alignment marks on sprockets with color coded alignment marks (colored links) on the chain.
2. Install timing chain tension guide.
   - The upper bolt has a longer shank than the lower bolt.

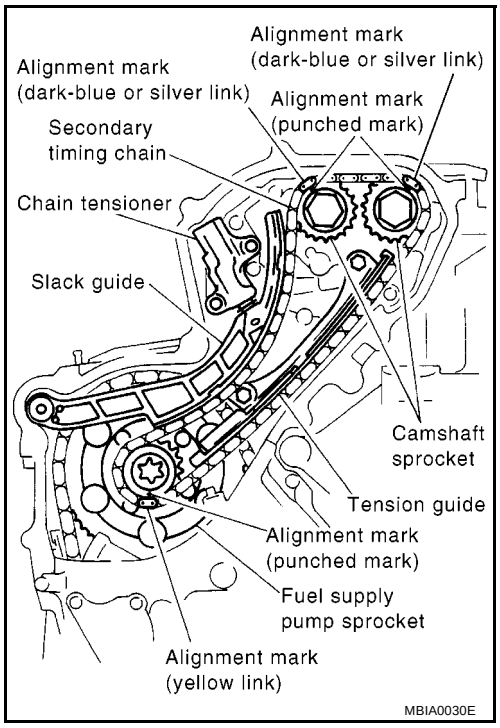

3. Using a hexagon-head wrench [face to face 6 mm (0.24 in) SST], install timing chain slack guide.

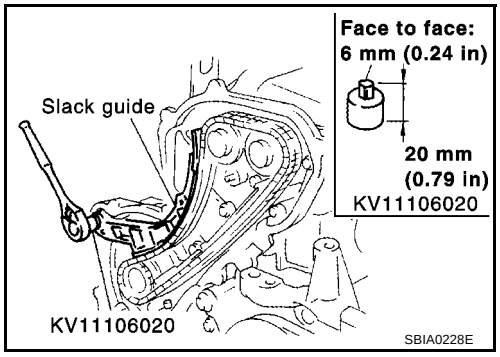

4. Install chain tensioner.

a. Push the plunger of the chain tensioner. While holding it with a push pin, install the chain tensioner.

b. Using a hexagon-head wrench [face to face 5 mm (0.20 in) SST], tighten bolts.

c. Pull out the push pin, etc. holding the plunger.
   - **Check again that the alignment marks on the sprockets and the colored alignment marks on the timing chain are aligned.**

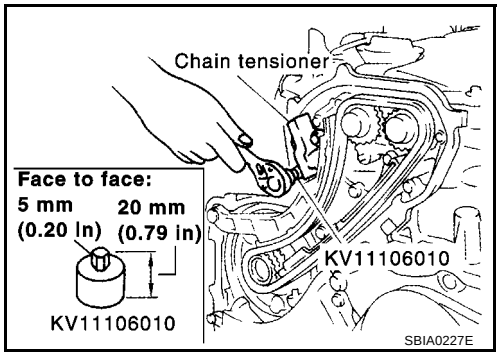

5. Install front chain case.

a. Install tension guide on the back surface of front chain case.
   - Hold front chain case vertically when installing. Tension guide may come off if front chain case is tilted.

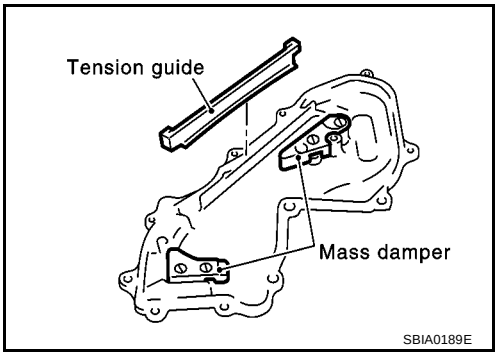

b. Apply Genuine Liquid Gasket or equivalent (Refer to EM-110, "Precautions for Liquid Gasket" .) on both ends of arched area (locations where rear chain case is adjoined) as shown in the figure.

c. Install front chain case.
   - When installing, align dowel pin on oil pump case with the pin hole.

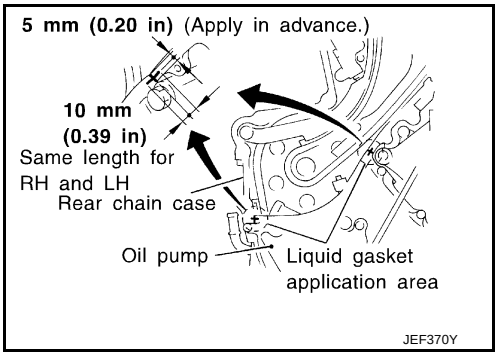

   - Install No. 6, 10 and 11 bolts with the rubber washer to the front chain case.

d. Tighten fixing bolts in the numerical order shown in the figure.

e. After tightening all the bolts, re-tighten in the same order.

6. Hereafter, install in the reverse order of removal.

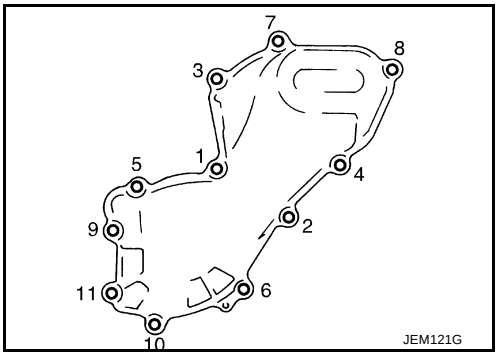

PRIMARY TIMING CHAIN

PFP:13028

Removal and Installation

EBS00QFS

CAUTION:

- **After removing timing chain, do not turn crankshaft and camshaft separately, or valves will strike piston heads.**
- **When installing camshafts, chain tensioners, oil seals or other sliding parts, lubricate contacting surfaces with new engine oil.**
- **Apply new engine oil to parts marked in illustration before installation.**

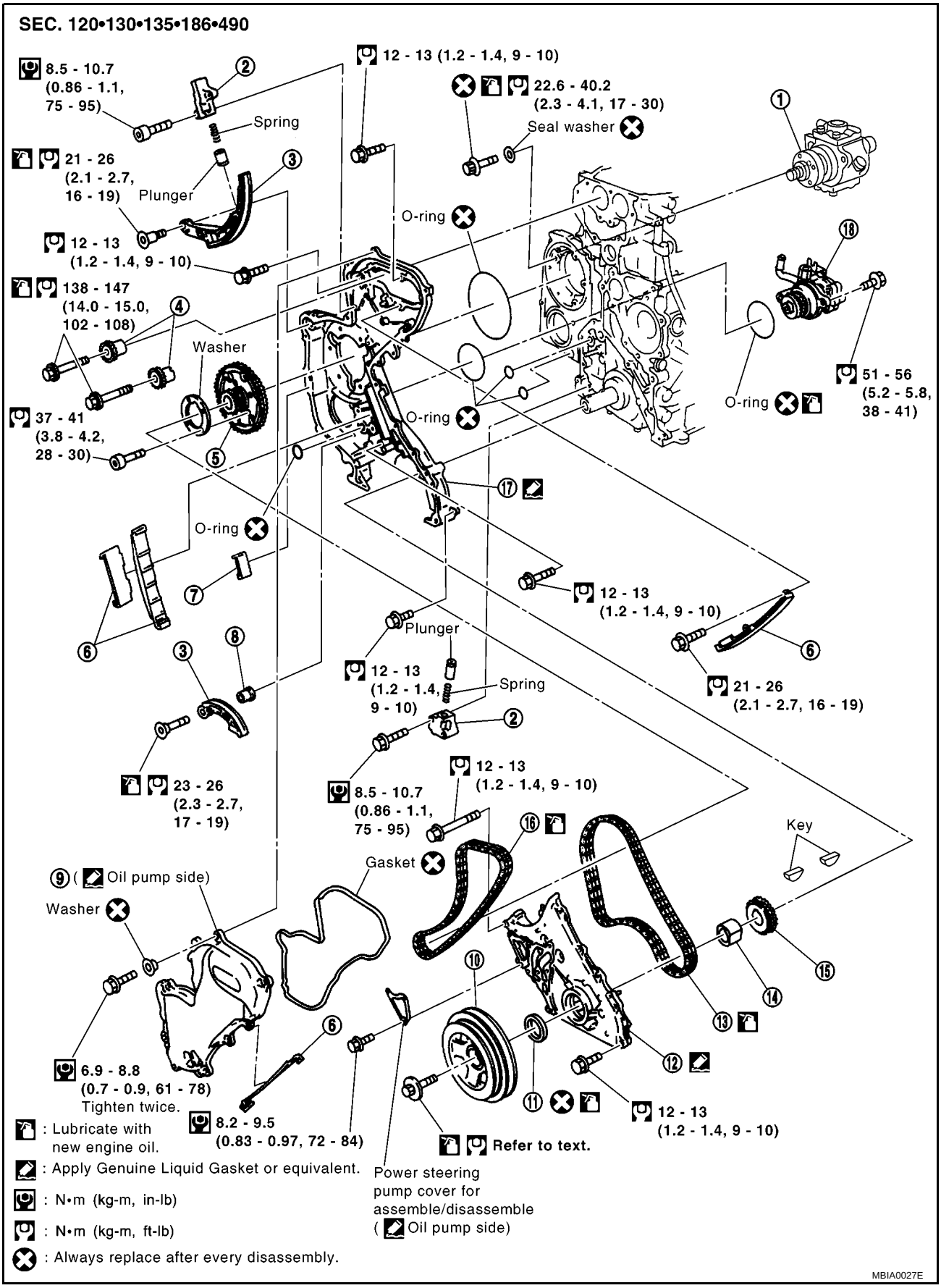

1. Fuel pump
2. Chain tensioner
3. Slack guide
4. Camshaft sprocket
5. Fuel pump sprocket
6. Tension guide

7.	Chain guide	8.	Spacer	9.	Front chain case
10.	Crankshaft pully	11.	Front oil seal	12.	Oil pump housing
13.	Primary timing chain	14.	Oil pump drive spacer.	15.	Crankshaft sprocket
16.	Secondary timing chain	17.	Rear chain case	18.	Power steering pump

REMOVAL

1. Remove engine and transaxle. Refer to EM-197, "Removal and Installation" .
2. Remove transaxle from engine. place engine onto engine stand (SST). Refer to EM-201, "Disassembly and Assembly" .
3. Remove oil pan. Refer to EM-137, "Removal and Installation" .
4. Remove oil filter bracket. Refer to LC-28, “Oil Filter Bracket”.
5. Remove injection tube and fuel injector. Refer to EM-147, "Removal and Installation" .
6. Remove secondary timing chain and associated parts. Refer to EM-171, "Removal and Installation" .
7. When removing rear chain case, remove camshaft sprockets. Refer to EM-162, "Removal and Installation" .
8. Remove crankshaft pulley.

a. Hold crankshaft pulley with the pulley holder (SST).

b. Loosen crankshaft pulley fixing bolt and pull out the bolt approximately 10 mm (0.39 in).

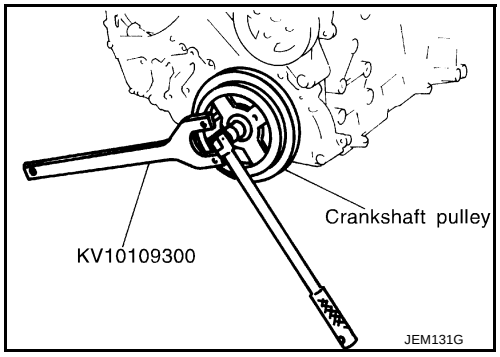

c. Using pulley puller (SST), remove crankshaft pulley.
   - Use two M6 bolts with approx. 60 mm (2.36 in) shank length for securing crankshaft pulley.

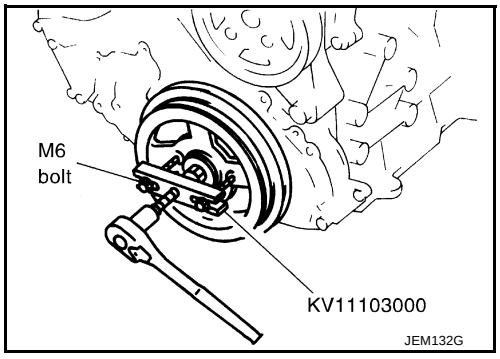

9. Remove oil pump housing.
   - Loosen bolts in the reverse order of that shown in the figure and remove them.
   - Use seal cutter (SST) etc. for removal.
10. Remove front oil seal from oil pump housing.
   - Punch out the seal off from the back surface of the oil pump using a flat-bladed screwdriver.
   - **Be careful not to damage the oil pump housing.**

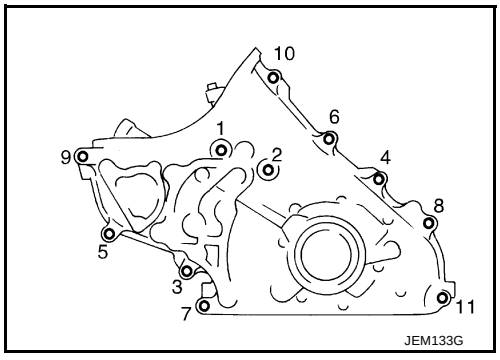

11. Remove chain tensioner.
    - When removing chain tensioner, push the sleeve of chain tensioner and keep it pressed with a push pin, etc.
12. Remove timing chain slack guide.

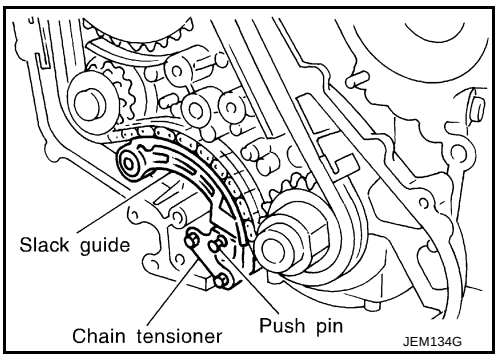

13. Hold fuel pump sprocket and remove bolt.

a. Insert positioning stopper pin (SST) into the hole 6 mm (0.24 in) in the diameter on the fuel pump sprocket.

b. Using a TORX wrench (SST), turn pump shaft little by little to adjust the position of fuel pump sprocket so that the holes align.

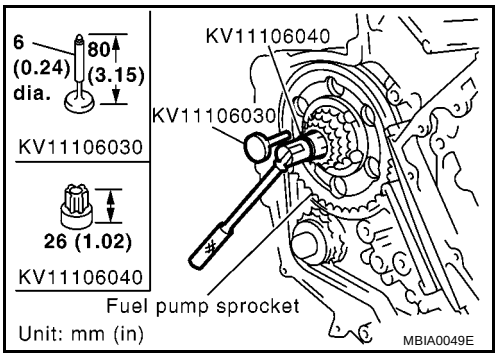

c. Push positioning stopper pin (SST) through fuel pump sprocket to fuel pump body to hold pump sprocket, and remove bolt.

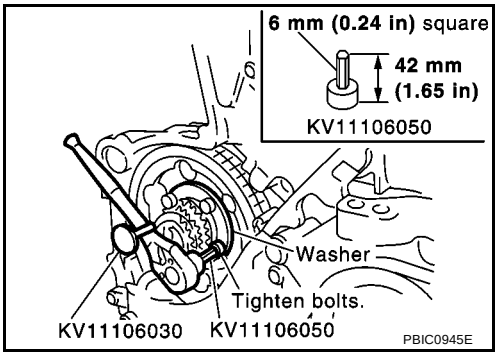

14. Remove primary timing chain with fuel pump sprocket and crankshaft sprocket.

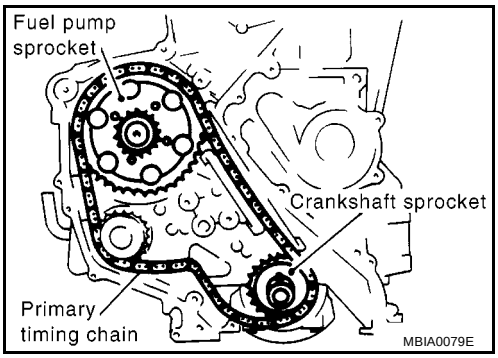

15. Remove chain guide and tension guides.
16. Remove fuel pump.
17. Remove power steering pump.

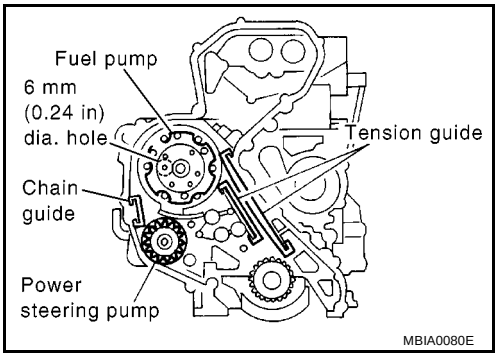

18. Remove camshaft sprockets.
    - Loosen the camshaft sprockets installation bolts by fixing the hexagonal portion of the camshaft.

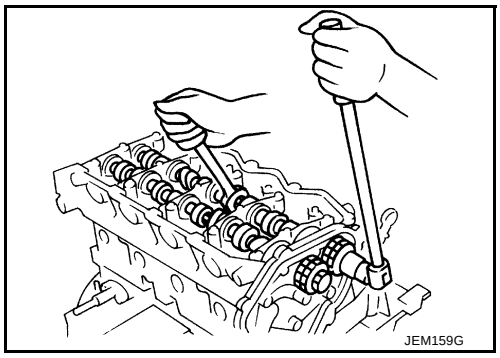

19. Remove rear chain case.
    - Loosen fixing bolts in the reverse order of that shown in the figure and remove them.
    - Use seal cutter (SST) for removal.

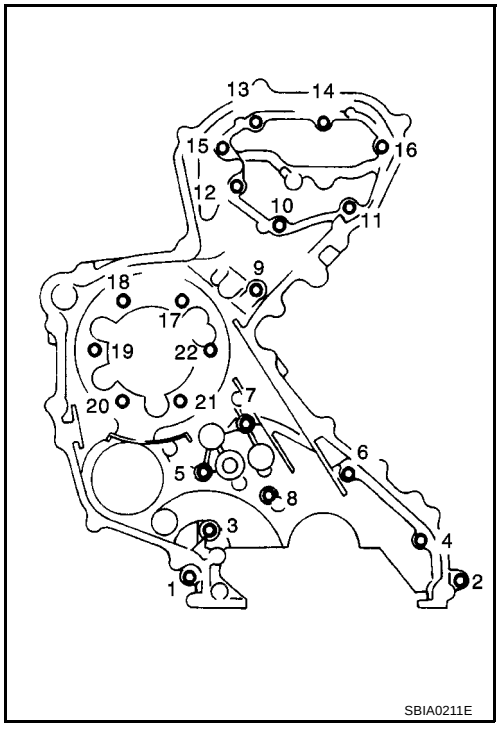

INSPECTION AFTER REMOVAL

Timing Chain

Check for cracks and excessive wear at roller links. Replace chain if necessary.

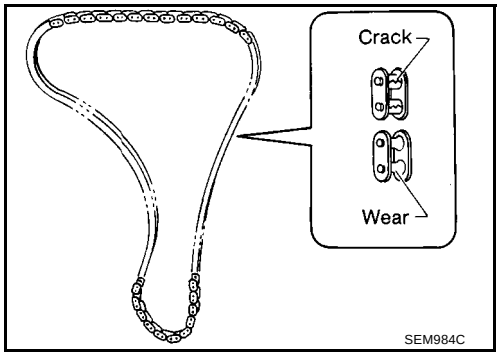

INSTALLATION

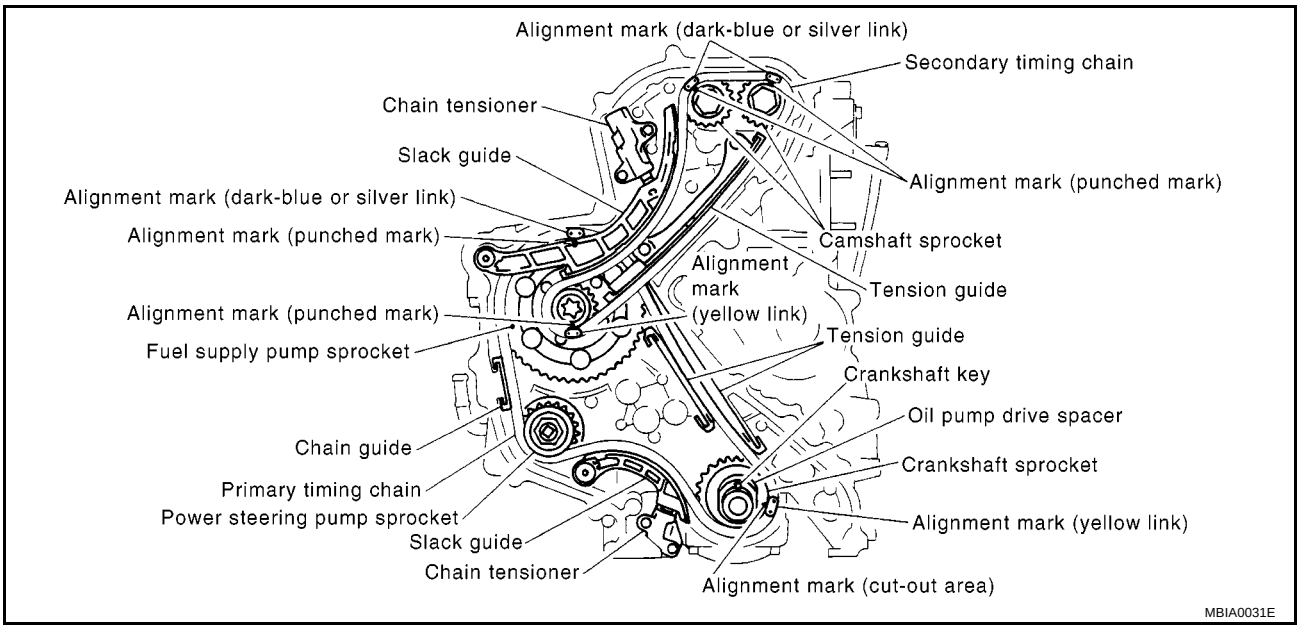

1. Install rear chain case.

a. Apply a continuous bead of Genuine Liquid Gasket or eqivalent on locations shown in the figure. Refer to EM-110, "Precautions for Liquid Gasket" .
A: Apply bead so that it does not protrude into the oil passage.
B, C: Minimize overlapping area of bead, by starting and ending at areas of bead as shown in the figure. Apply so that the portion marked * comes at an external location but cannot be viewed externally after engine assembly.
D: Leave the start and end areas of the bead slightly protruding from the case surface.

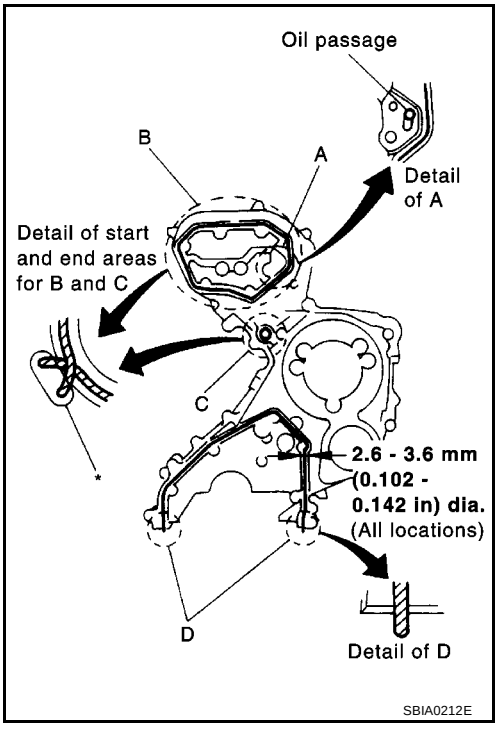

b. Install four O-rings to the grooves of the cylinder block and fuel pump bracket.

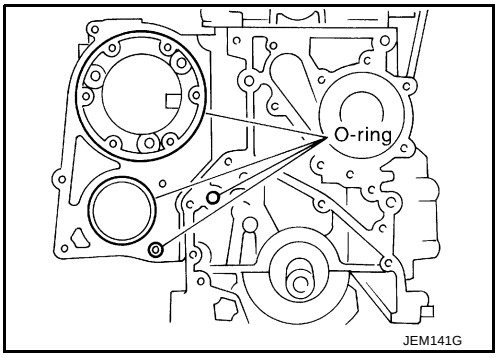

c. Install rear chain case.
   - When installing, align the dowel pin with the pin hole.

d. Tighten bolts in the numerical order shown in the figure.
   - Install the following four types of bolts, referring to the figure.

     16 mm (0.63 in) : Bolt No. 1, 2, 16, 17, 18, 19, 20, 21, 22
     20 mm (0.79 in) : Bolt No. 3, 4, 6, 9, 10, 11, 13, 14
     25 mm (0.98 in) : Bolt No. 12, 15
     35 mm (1.38 in) : Bolt No. 5, 7, 8

   - The shank length under the bolt neck above is the length of threaded part (pilot portion not included).

e. After tightening all the bolts, re-tighten in the same order.

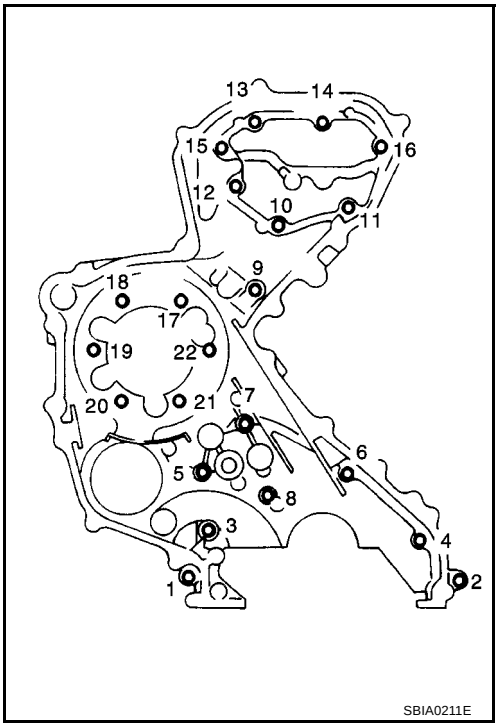

2. Install power steering pump.
3. Install fuel pump.
   - Before installing, make sure the notch on the fuel pump flange and the hole 6 mm (0.24 in) in diameter on the pump body are aligned.
4. Install chain guide and tension guides.
5. Install crankshaft sprocket, aligning it with the crankshaft key on the far side.

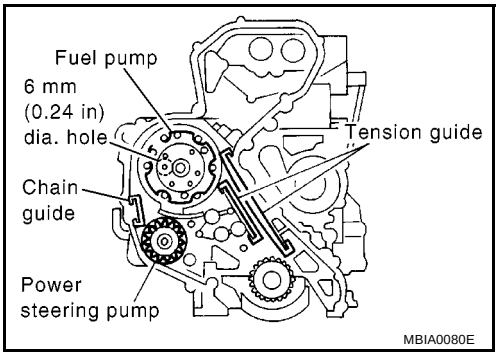

6. Install primary timing chain with fuel pump sprocket.
   - When installing, match the alignment marks on sprockets with color coded alignment marks (colored links) on the chain.
   - Install fuel pump sprocket washer with the surface marked “F” (front mark) facing the front of the engine.
7. Install timing chain onto power steering pump sprocket and through chain guide.

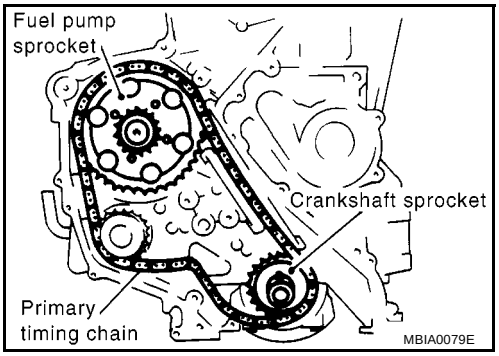

8. Use the positioning stopper pin (SST) to hold the fuel pump sprocket and install the bolt.
   - Using a TORX wrench (SST), turn the pump shaft little by little to adjust the position of the pump flange. Insert positioning stopper pin (SST) into the hole 6 mm (0.24 in) in diameter on the fuel pump sprocket so that the stopper pin goes through the pump flange to the pump body. While the stopper pin is in place, install the bolt.

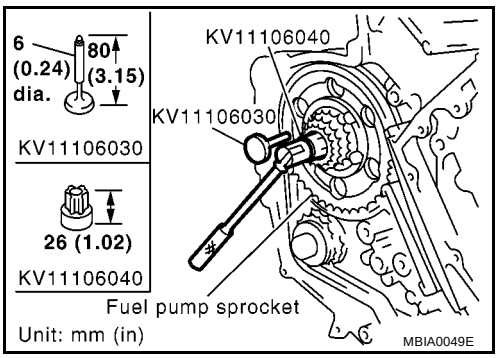

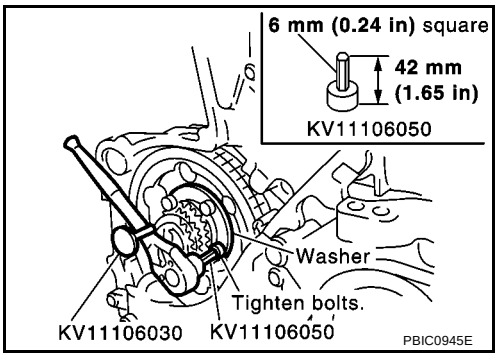

9. Install timing chain slack guide.
10. Install chain tensioner.
    - Push the plunger of the chain tensioner. While keeping plunger pressed down with a push pin, etc., install the chain tensioner.
    - After installation, pull out the push pin holding the plunger.
    - **Check again that the alignment marks on the sprockets and the colored alignment marks on timing chain are aligned.**

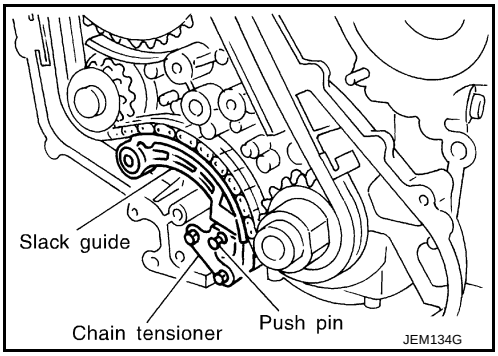

11. Install front oil seal to oil pump housing.
    - Using a suitable drift [62 mm (2.44 in) dia.], force fit the seal until it hits the bottom.
    - **Do not touch lips of oil seal. Make sure seal surfaces are free of foreign materials.**

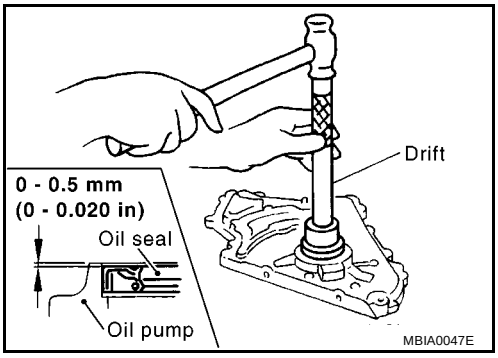

12. Install chain case cover (for opening for power steering pump removal/installation) to oil pump.
    - Apply a continuous bead of Genuine Liquid Gasket or equivalent as shown in the figure. Refer to EM-110, "Precautions for Liquid Gasket" .
    - Apply liquid gasket on oil pump-side surface.

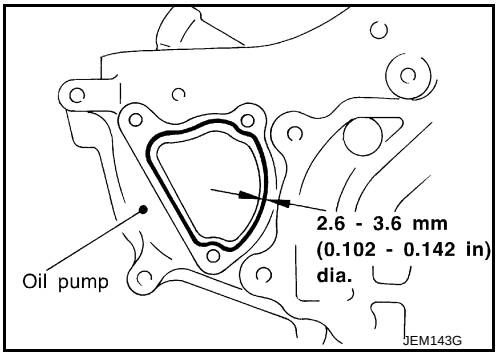

13. Install oil pump housing.

a. Apply a continuous bead of Genuine Liquid Gasket or equivalent on locations shown in the figure. Refer to EM-110, "Precautions for Liquid Gasket" .
A: Leave the start and end areas of the bead slightly protruding from the surface.
B: Apply liquid gasket along upper end surface of oil pump housing.

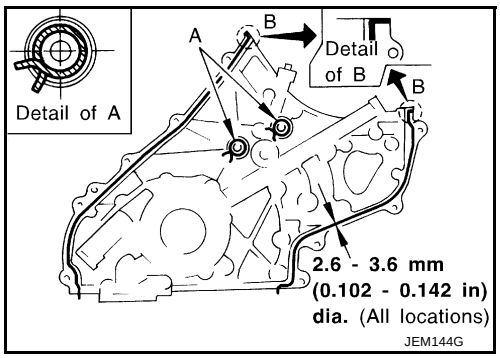

b. Install oil pump drive spacer to crankshaft.
- Install with the front mark (punched mark) facing the front of the engine.

c. Install O-ring into the groove of rear chain case.

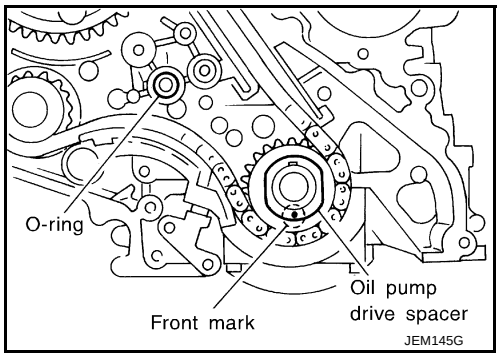

d. Install oil pump housing.
- When installing, align the inner rotor in the direction of the two facing flats of the oil pump drive spacer.
- When installing, align the dowel pin with the pin hole.

e. Tighten fixing bolts in the numerical order shown in the figure.

f. After tightening all the bolts, re-tighten in the same order.

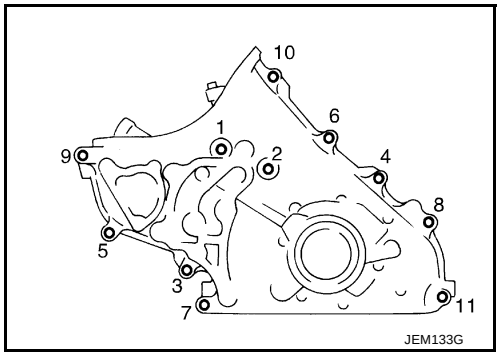

14. Check gaps on upper oil pan mounting surface.
- Using straightedge and feeler gauge, measure gaps between the locations of the following parts:

Oil pump housing and rear chain case:

Standard : – 0.14 to 0.14 mm (– 0.0055 to 0.0055 in)

Rear chain case and cylinder block:

Standard : – 0.25 to 0.13 mm (– 0.0098 to 0.0051 in)

- If the measured value is out of the above range, install again.

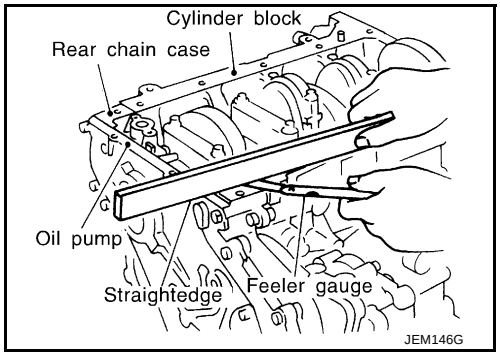

15. Install crankshaft pulley.

a. Install crankshaft pulley to crankshaft.

b. Hold crankshaft pulley with the pulley holder (SST).

c. Tighten bolt to 20 to 29 N·m (2.0 to 3.0 kg-m,15 to 21 ft-lb).

d. Put an alignment mark on crankshaft pulley that aligns with one of the punched marks on the bolt.

e. Tighten fixing bolt another 60° - 66° [target: 60° (turn by one notch)].

16. Install secondary timing chain and the associated parts.
Refer to EM-174, "INSTALLATION" .

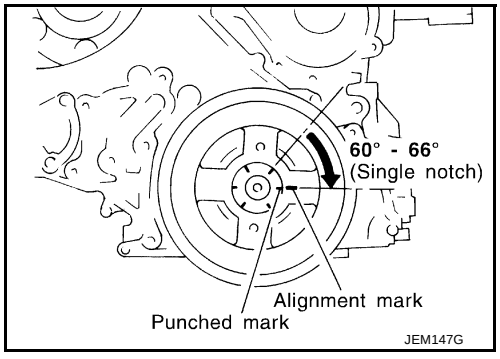

17. Install in the reverse order of removal hereafter.

CYLINDER HEAD

PFP:11041

On-Vehicle Service

EBS00QFT

CHECKING COMPRESSION PRESSURE

1. Warm up engine thoroughly. Then, stop it.
2. Using CONSULT-II, make sure no error codes are indicated for self-diagnosis items. Refer to EC-971, "Basic Inspection" .
   - Do not disconnect CONSULT-II until the end of this operation; it will be used to check engine rpm and for error detection at the end of this operation.
3. Disconnect the negative battery cable.
4. To prevent fuel from being injected during inspection, remove fuse [ECCS (20A)] from fuse box on the left side of engine compartment.
5. Remove glow plugs from all the cylinders. Refer to EM-142, "Removal and Installation" .

   CAUTION:
   - **Before removal, clean the surrounding area to prevent entry of any foreign materials into the engine.**
   - **Carefully remove glow plugs to prevent any damage or breakage.**
   - **Handle with care to avoid applying any shock to glow plugs.**

Engine room
Fuse and fusible link box

15A	H/L RH	15A	AUDIO	20A	ECCS
15A	H/L LH	10A	HORN	10A	EGR
15A	THROT MTR	10A	TAIL LAMP	15A	IGN COIL
15A	FR FOG-L	10A	RR FOG-L	10A	ECCS
30A	FR WIPER				

Vehicle front

MBIA0019E

6. Install adapter to installation holes of glow plugs and connect compression gauge for diesel engine.

   : 18 - 21 N·m (1.8 - 2.2 kg-m, 13 - 15 ft-lb)
7. Connect battery negative terminal.
8. Set the ignition switch to “START” and crank. When gauge pointer stabilizes, read compression pressure and engine rpm. Repeat the above steps for each cylinder.
   - Always use a fully-charged battery to obtain specified engine speed.

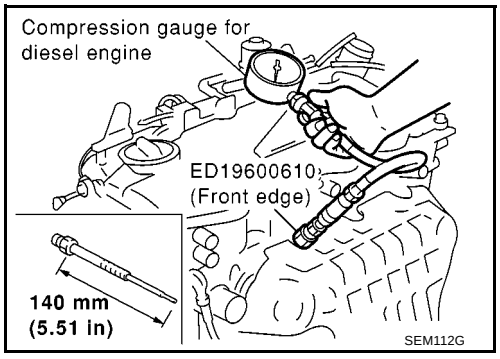

Unit: kPa (bar, kg/cm^2 , psi)/rpm

Standard	Minimum	Difference limit between cylinders
2,991 (29.9, 30.5, 2,434)/ 200	2,452 (24.52, 25.0, 356)/ 200	490 (4.90, 5.0, 71)/200

- When engine rpm is out of the specified range, check the specific gravity of battery liquid. Measure again under corrected conditions.
- If engine rpm exceeds the limit, check valve clearance and combustion chamber components (valves, valve seats, cylinder head gaskets, piston rings, pistons, cylinder bores, cylinder block upper and lower surfaces) and measure again.
- If compression pressure is low in some cylinders, apply engine oil from glow plug installation hole. Then check pressure again.
  - If compression pressure becomes normal after applying oil, piston ring may be worn or damaged. Check piston ring for malfunction. If any, replace piston ring.
  - If compression pressure is still low after applying oil, valve may be malfunctioning. Check valve for malfunction. If contact malfunction is found, replace valve or valve seat.
- If compression pressure in adjacent two cylinders is low after applying oil, pressure may be leaking from gasket. In this case, replace cylinder head gasket.

9. Complete this operation as follows.

a. Turn the ignition switch to “OFF”.

b. Disconnect negative battery cable.

c. Install glow plug and install all the parts removed in step 4.
d. Install fuse [ECCS (20A)].
e. Connect negative battery cable.
f. Using CONSULT-II make sure no error code is indicated for items of self-diagnosis.

Removal and Installation

EBS00QFU

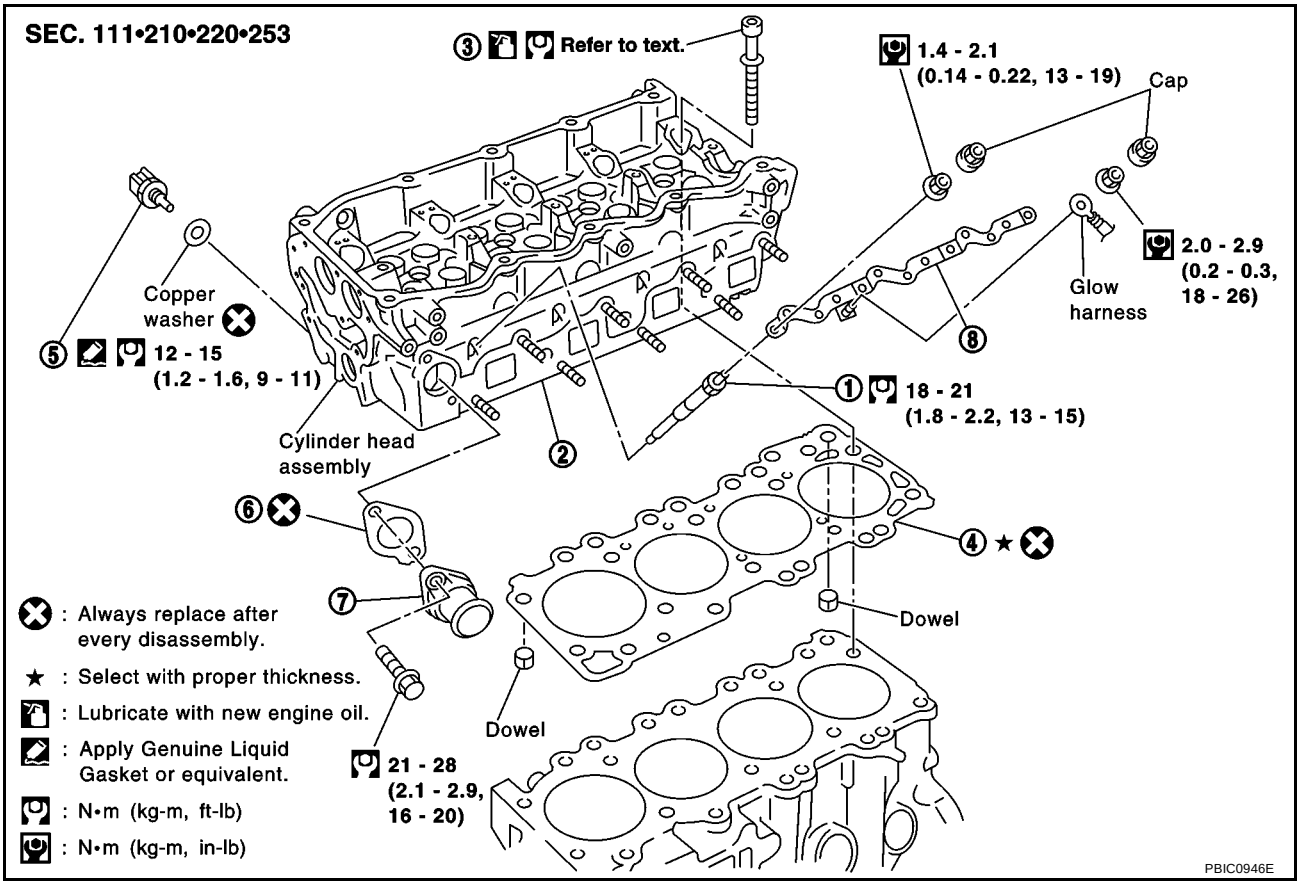

1. Glow plug	2. Cylinder head assembly	3. Cylinder head bolt
4. Gasket	5. Engine coolant temperature sensor	6. Gasket
7. Water outlet	8. Glow plate	

CAUTION:
Apply new engine oil to parts marked in illustration before installation.

REMOVAL

1. Drain engine coolant. Refer to LC-40, “Changing Engine Coolant”.
2. Remove the following parts.
   - Rocker cover (Refer to EM-160, "Removal and Installation" .)
   - Air cleaner and air duct (Refer to EM-119, "Removal and Installation" .)
   - Vacuum pump (Refer to EM-143, "Removal and Installation" .)
   - Injection tube, spill tube and fuel injector (Refer to EM-147, "Removal and Installation" .)
   - Intake manifold (Refer to EM-123, "Removal and Installation" .)
   - Exhaust manifold and turbocharger (Refer to EM-128, "Removal and Installation" .)
   - Secondary timing chain (Refer to EM-171, "Removal and Installation" .)
   - Camshaft (Refer to EM-162, "Removal and Installation" .)

3. Remove cylinder head assembly.
   - Loosen and remove mounting bolts in the reverse order shown in the figure.
   - Lift up the cylinder head assembly to avoid interference with dowel pins located between the block and head, and remove cylinder head assembly.

     CAUTION:
     Remove glow plug in advance to avoid damage as the tip of the glow plug projects from the bottom of the cylinder head, or, place wood blocks beneath both ends of the cylinder head to keep the cylinder bottom from any contact.

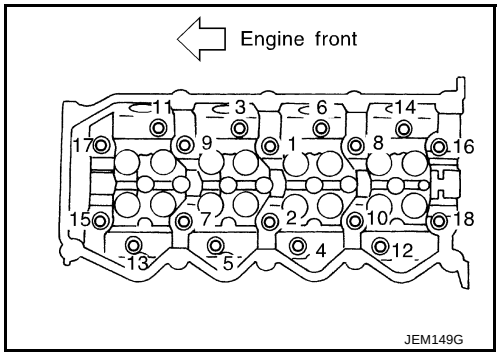

   - For glow plug removal, the following shall be noted.

     CAUTION:
     - **To avoid breakage, do not remove glow plug unless necessary.**
     - **Perform continuity test with glow plug installed.**
     - **Keep glow plug from any impact. (Replace if dropped from a height 10 cm (3.94 in) or higher.)**
     - **Do not use air impact wrench.**

INSPECTION AFTER REMOVAL

Cylinder Head Bolt Deformation

- Using micrometer, measure the outer diameters d1 and d2 of bolt thread as shown in the figure.
- If the necking point can be identified, set it as measuring point d2.
- Calculate the difference between d1 and d2.

  Limit : 0.15 mm (0.0059 in)

- If out of the limit, replace cylinder head bolt.

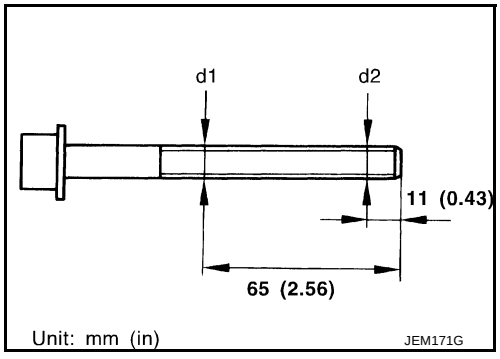

Cylinder Head-to-block Difference Check

- After installing cylinder head, measure dimension from the front end surface of cylinder block to that of cylinder head.

  Standard : 23.53 - 24.07 mm (0.9264 - 0.9476 in)

- If the difference is out of the range, check fitting of dowel pins and cylinder head.

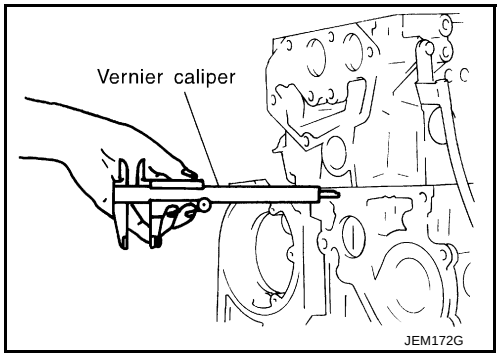

INSTALLATION

Before installation, remove old liquid gasket from mating surface of all liquid gasket applied parts.

1. Install cylinder head gasket.
   - Cylinder head gasket to be installed is selected by its thickness through the following procedure.
   - **When replacing gasket alone**
     - Install a gasket with same thickness as that of the one removed.
     - Identify the thickness of gasket by the number of cut-outs on the rear RH side.

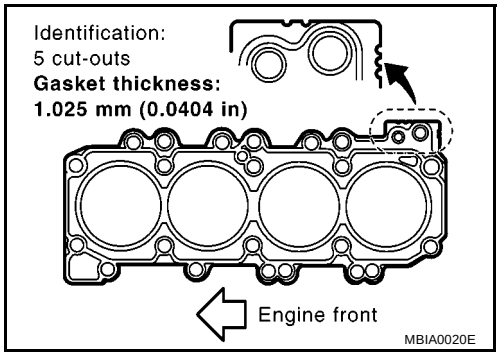

Gasket thickness* mm (in)	Number of grade	Number of cut-outs
0.900 (0.0354)	1	0
0.925 (0.0364)	2	1
0.950 (0.0374)	3	2
0.975 (0.0384)	4	3
1.000 (0.0394)	5	4
1.025 (0.0404)	6	5

*: Measured with head bolts tightened

- Gasket thickness can be identified at the location shown in the figure by the numbers of cut-outs before removal.

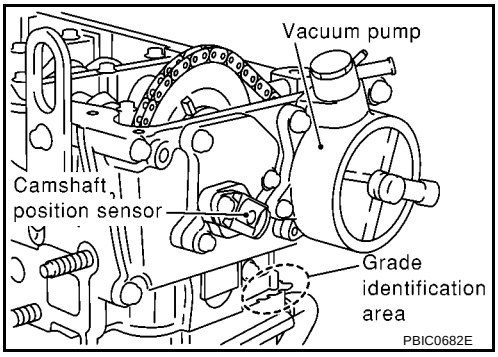

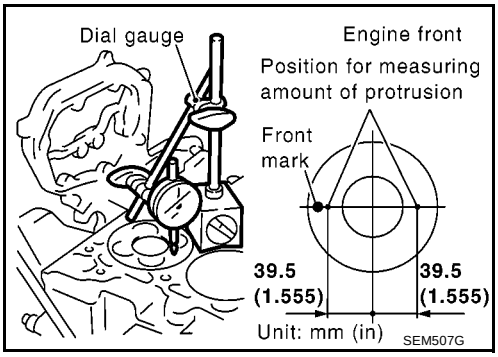

– **When the following parts have been repaired/replaced:**
- With cylinder block upper surface and/or crankshaft pin journal ground.
- With cylinder block, pistons, connecting rods, and/or crankshaft replaced.

a. Set piston at a point close to TDC.
b. Set a dial gauge at the location as shown in the figure. Turning crankshaft gradually, set the gauge scale to “0” where the piston protrusion is maximized.
c. Move the dial gauge stand so that the tip of dial gauge can contact the cylinder block. Read the difference.
d. Measure at two locations per cylinder, that is eight locations for four cylinders. Select gasket based on the maximum protrusion of eight measurements.

Piston protrusion mm (in)	Gasket thickness* mm (in)	Identification
		Number of cut-outs
Less than 0.255 (0.0100)	0.900 (0.0354)	0
Less than 0.255 - 0.280 (0.0100 - 0.0110)	0.925 (0.0364)	1
Less than 0.280 - 0.305 (0.0110 - 0.0120)	0.950 (0.0374)	2
Less than 0.305 - 0.330 (0.0120 - 0.0130)	0.975 (0.0384)	3
Less than 0.330 - 0.355 (0.0130 - 0.0140)	1.000 (0.0394)	4
More than 0.355 (0.0140)	1.025 (0.0404)	5

*: Measured with head bolts tightened

2. Apply a continuous bead of Genuine Liquid Gasket or equivalent on the surface shown in the figure.
   A: Apply bead so that it does not protrude into oil passage. Refer to EM-110, "Precautions for Liquid Gasket" .
   B: Minimize the overlapping area of the bead, with start and end areas of bead as shown in the figure.
   Apply so that the portion marked * comes at an external location but cannot be viewed externally after engine is assembled.

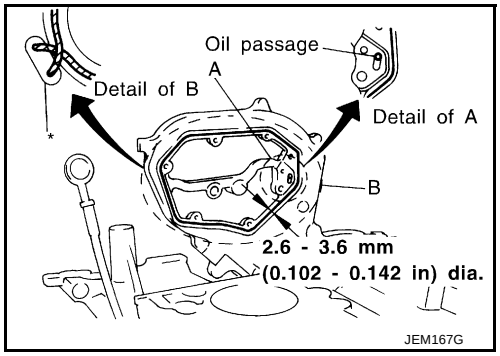

3. Install cylinder head assembly.
   - Tighten bolts in numerical order as shown in the figure according to the following procedure:

a. Apply engine oil to bolt threads and seat surfaces.
b. Tighten bolts to 35 to 44 N·m (3.5 to 4.5 kg-m, 26 to 32 ft-lb).
c. Tighten 180° to 185° [target: 180°] (angular tightening).
d. Loosen completely to 0 N·m (0 kg-m, 0 in-lb) in the reverse order of that shown in the figure.
e. Tighten bolts to 35 to 44 N·m (3.5 to 4.5 kg-m, 26 to 32 ft-lb).
f. Tighten 90° to 95° [target: 90°] (angular tightening)
g. Tighten another 90° to 95° [target: 90°] (angular tightening).
   - **When an angle wrench is not used, paint an alignment mark on the head of cylinder head bolt and cylinder head surface before tightening. Check the angle with a protractor.**

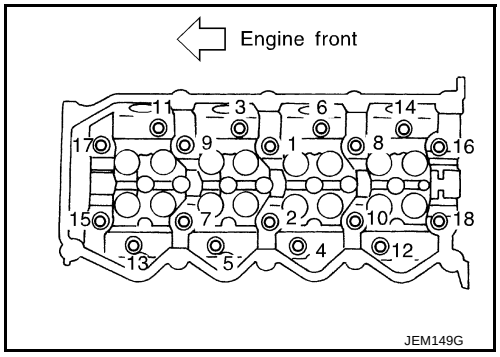

4. Install glow plug.
   - **To avoid damage, glow plugs should be removed only when required.**
   - **Handle with care to avoid applying shock. When dropped from approx. 100 mm (3.94 in) or higher, always replace with a new one.**
   - Before installing, remove carbon depositing on mounting hole of glow plug with a reamer.

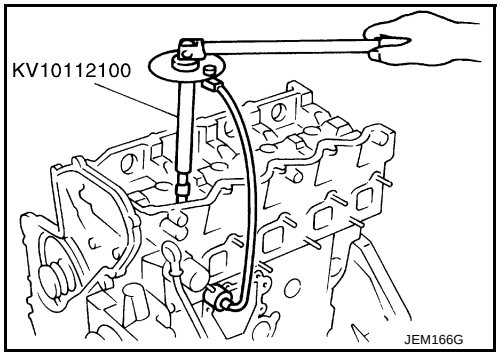

5. Install engine coolant temperature sensor and thermal transmitter.

Disassembly and Assembly

EBS00QFV

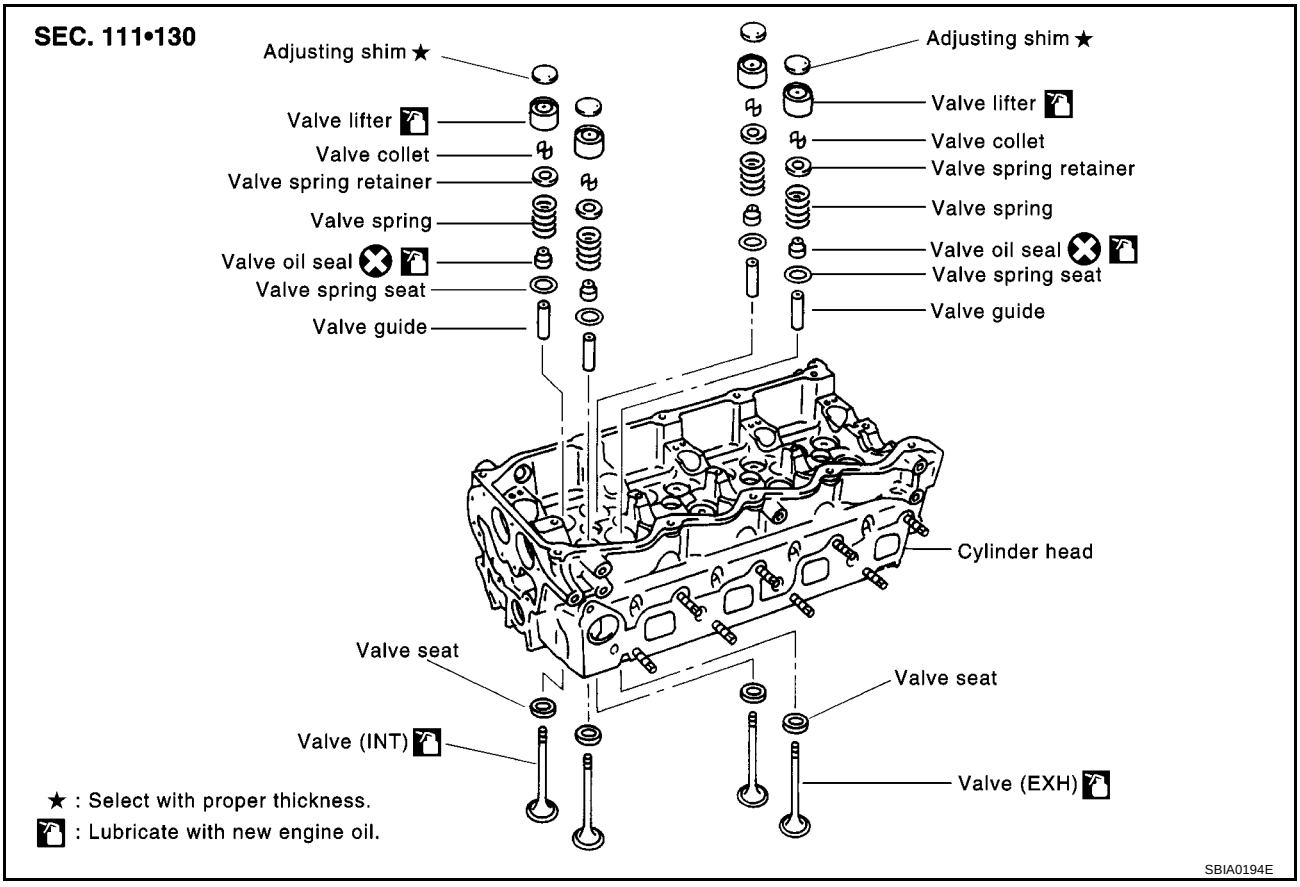

CAUTION:
Apply new engine oil to parts marked in illustration before installation.

DISASSEMBLY

1. Remove adjusting shims and valve lifters.
   - Check the installation positions, and keep them to avoid being confused.
2. Remove valve.
   - Using valve spring compressor, compress valve spring. Using magnetic hand, remove valve collets.
3. Remove valve spring retainers and valve springs.
4. Remove valves as pressing valve stems toward combustion chamber.

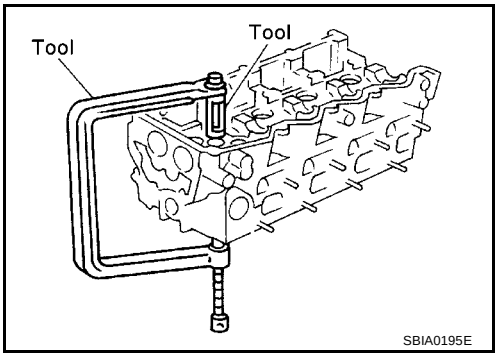

- Before removing the valve, check the valve guide clearance. Refer to EM-193, "Valve Guide Clearance" .
- Check installation positions, and keep them to avoid being confused.

  NOTE:
  Refer to the figure for intake and exhaust valve positions. Intake and exhaust valve driving cams are provided alternately for each camshaft.

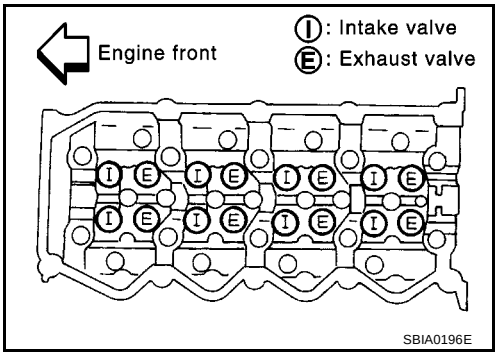

5. Remove valve oil seals using valve oil seal puller.
6. Remove valve spring seats.
7. Before removing valve spring seats, perform valve seat contact check. Refer to EM-194, "Valve Seat Contact" .
8. Before removing valve guides, perform valve guide clearance check. Refer to EM-193, "Valve Guide Clearance" .

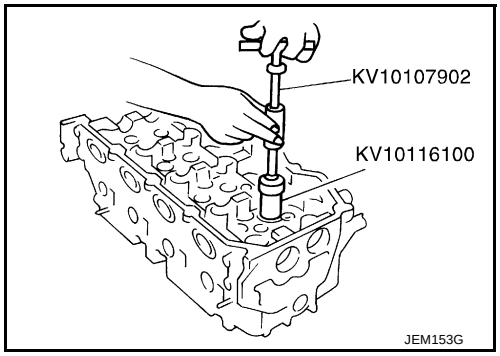

ASSEMBLY

1. Install valve guides. Refer to EM-193, "Valve Guide Replacement" .
2. Install valve seats. Refer to EM-194, "Valve Seat Replacement" .
3. Using valve oil seal drift, install valve oil seals referring to the dimension shown in the figure.
4. Install valve spring seats.
5. Install valves.
   - Install the valves with bigger outer diameter to intake valve side.
   - Note that valve layout here is different from that of conventional engine.

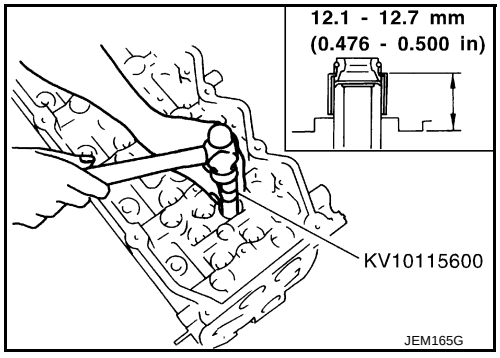

6. Install valve spring.
7. Install valve spring retainers.
8. Using valve spring compressor, compress valve springs.
   Then install valve collets using magnetic hand.
   - After installing valve collets, tap the stem end using a plastic hammer, and check the installation status.
9. Install valve lifters and adjusting shims to the same positions as before.

INSPECTION AFTER DISASSEMBLY

Cylinder Head Distortion

Using straightedge and feeler gauge, check the bottom of the cylinder head for distortion.

Limit : 0.04 mm (0.0016 in)

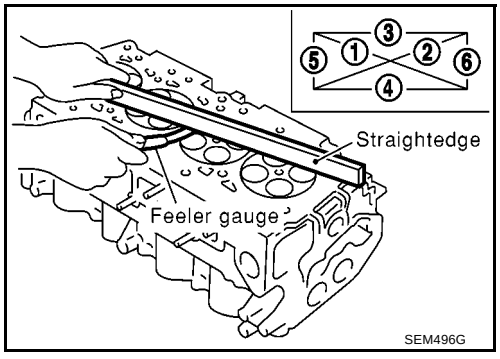

Valve Dimension

Check dimensions of each valve. For dimensions, refer to SDS, EM-224, "VALVE" .

When valve head has been worn down to 1 mm (0.039 in) in margin thickness, replace valve.

Grinding allowance for valve stem tip is 0.2 mm (0.008 in) or less.

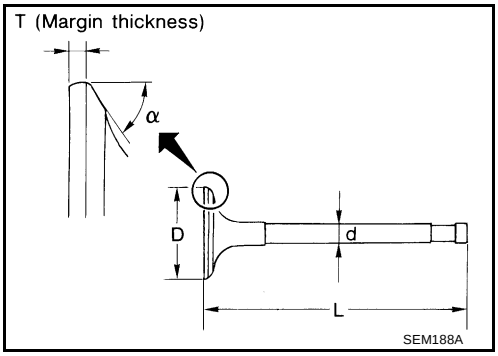

Valve Guide Clearance

- Perform the inspection before removing valve guides.
- Check that the valve stem diameter is within specifications.
- Push valve approximately 25 mm (0.98 in) toward combustion chamber, move valve toward dial indicator to measure valve movement.
- Valve guide clearance is 1/2 of movement on dial indicator.

Standard:

Intake	**: 0.020 - 0.053 mm (0.0008 - 0.0021 in)**
Exhaust	**: 0.040 - 0.073 mm (0.0016 - 0.0029 in)**

Limit:

Intake	**: 0.08 mm (0.0031 in)**
Exhaust	**: 0.10 mm (0.0039 in)**

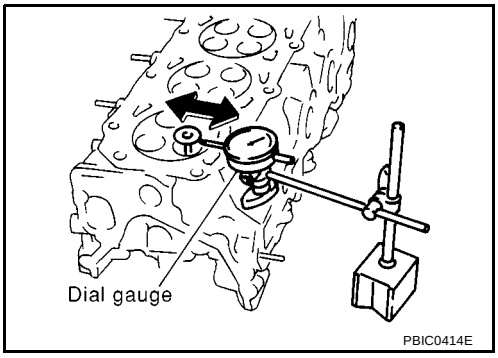

- If the measured value exceeds the limit, replace valve guide.

Valve Guide Replacement

- When removing valve guide, replace it with oversized [0.2 mm (0.0008 in)] valve guide.

1. Heat cylinder head to 110 to 130°C (230 to 266°F) in oil bath.

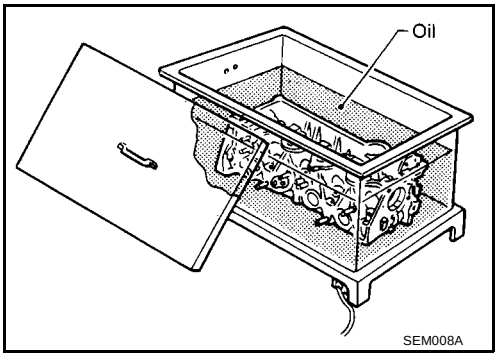

2. Using valve guide drift, tap valve guides out from the combustion chamber side.

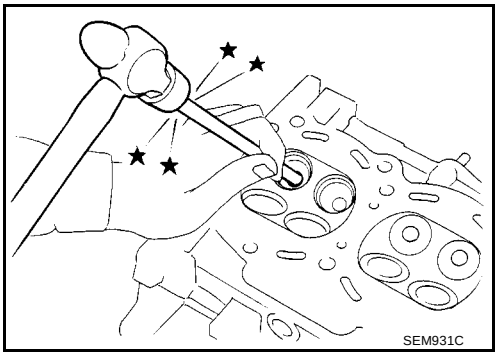

3. Remove cylinder head valve guide hole.

Valve guide hole diameter (for service parts):
: 10.175 - 10.196 mm (0.4006 - 0.4014 in)

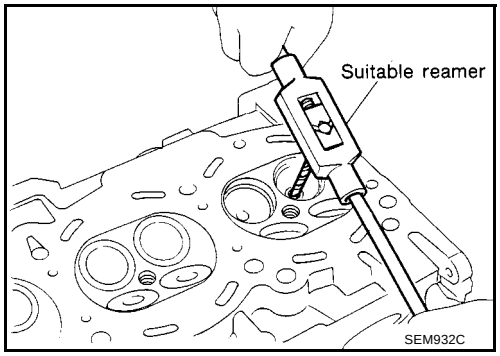

4. Heat cylinder head to 110 to 130°C (230 to 266°F) in oil bath.
5. Using valve guide drift, press fit valve guides from camshaft side, referring to the dimension shown in the figure.

Projection "L" : 10.4 - 10.6 mm (0.409 - 0.417 in)

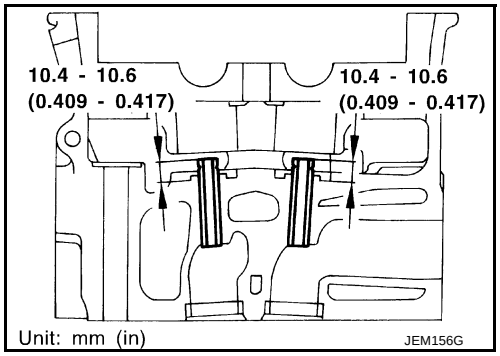

6. Using valve guide reamer, perform reaming to the press-fitted valve guides.

Reaming specifications:
Intake and Exhaust
6.000 - 6.018 mm (0.2362 - 0.2369 in)

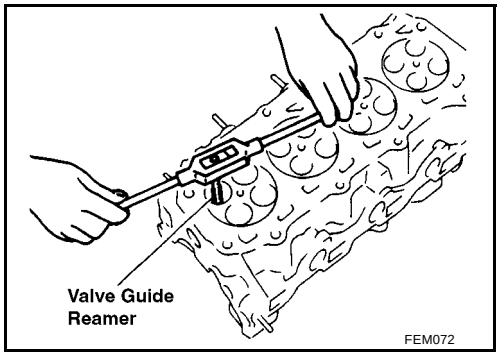

Valve Seat Contact

- Before starting this check, confirm that the dimension of valve guide and valves are as specified.
- Apply red lead primer on contacting surfaces of valves seat and of valve face to examine the conditions of contacting surfaces.
- Check that the paint on contacting surfaces is continuous along the entire circumference.
- If there are abnormal indications, grind the valve and check the contact again. If abnormal indications still persist, replace valve seat.

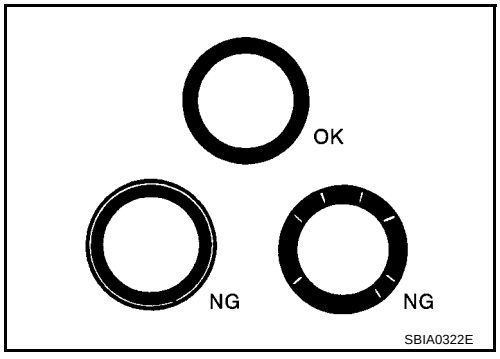

Valve Seat Replacement

- When removing valve seat, replace it with oversized [0.5 mm (0.020 in)] valve seat.

1. Cut valve seat to make it thin, and pull it out.

2. Machine cylinder head inner diameter at valve seat installation position.

   Machining dimension:

   Intake

   30.500 - 30.516 mm (1.2008 - 1.2014 in)

   Exhaust

   29.500 - 29.516 mm (1.1614 - 1.1620 in)

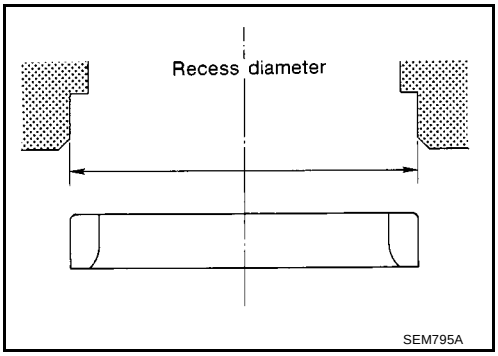

3. Heat cylinder head to approximately 110 to 130°C (230 to 266°F) in oil bath.
4. After cooling valve seats sufficiently with dry ice, press fit it to cylinder head.

   CAUTION:
   Do not touch the cooled valve seats directly by hand.
5. Using valve seat cutter, finish processing referring to the dimensions shown in the figure.

   CAUTION:
   When using valve seat cutter, grasp cutter handle with both hands, press cutter onto contacting face all around, and cut thoroughly. If cutter is pressed unevenly or repeatedly, the valve seat surface may be damaged.
6. Using compound, perform valve fitting.

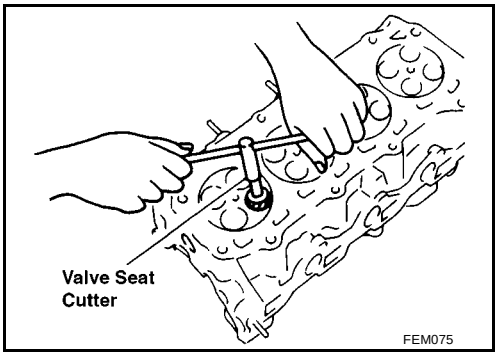

7. Check again to make sure that contacting status is satisfactory. For details, refer to EM-194, "Valve Seat Contact" .

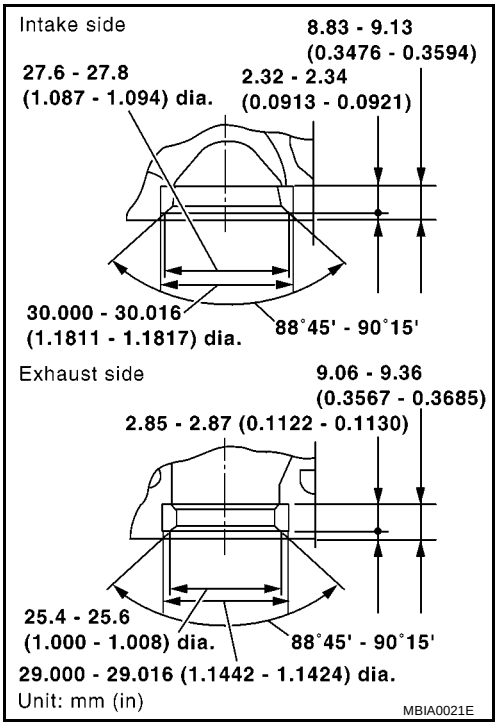

8. Use a depth gauge to measure the distance between the mounting surface of the cylinder head spring seat and the valve stem end. If the distance is shorter than specified, repeat step 5 above to adjust it. If it is longer, replace the valve seat with a new one.

Valve seat resurface limit "L":

Intake : 36.53 - 36.98 mm (1.4382 - 1.4559 in)

Exhaust : 36.53 - 37.01 mm (1.4382 - 1.4571 in)

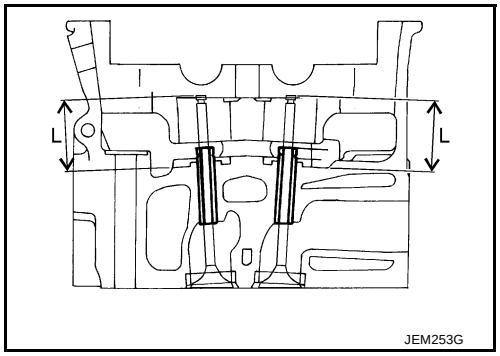

Valve Spring Squareness

Position a straightedge to valve spring, turn the spring, and measure the maximum clearance value between top surface of spring and the straightedge.

Limit : 1.5 mm (0.059 in)

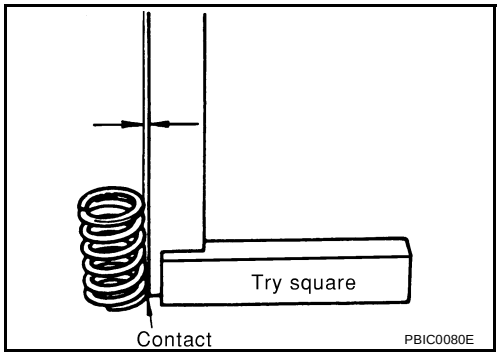

Valve Spring Dimensions and Valve Spring Pressure Load

Using valve spring tester, check the following.

Free length : 44.74 mm (1.7614in)

Installation height : 32.82 mm (1.2921 in)

Installation load : 184 - 208 N (18.77 - 21.22 kg, 41.4 - 46.8 lb)

Height during valve open : 24.82 mm (0.9772 in)

Load with valve open : 320 - 360 N (32.65 - 36.73 kg, 71.9 - 80.9 lb)

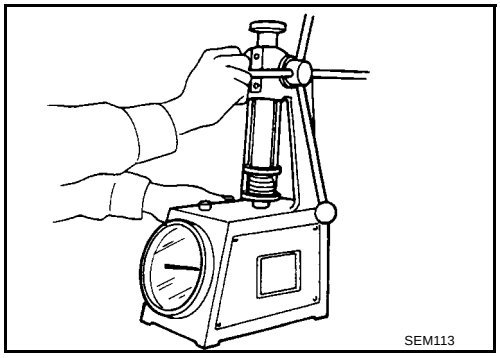

ENGINE ASSEMBLY

PFP:10001

Removal and Installation

EBS00QFW

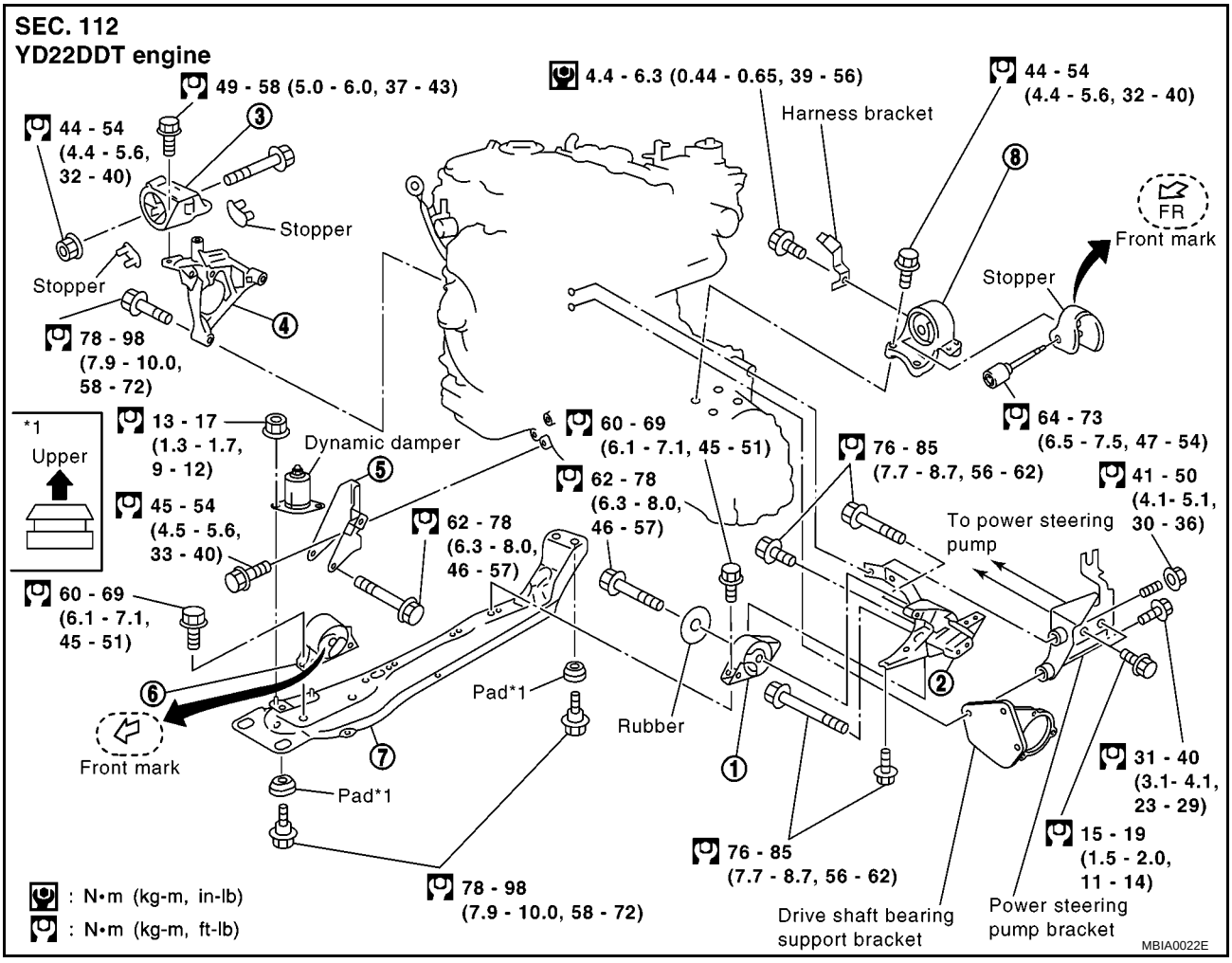

1. Rear engine mounting insulator
2. Rear engine mounting bracket
3. RH engine mounting insulator
4. RH engine mounting bracket
5. Front engine mounting bracket
6. Front engine mounting insulator
7. Center member
8. LH engine mounting insulator

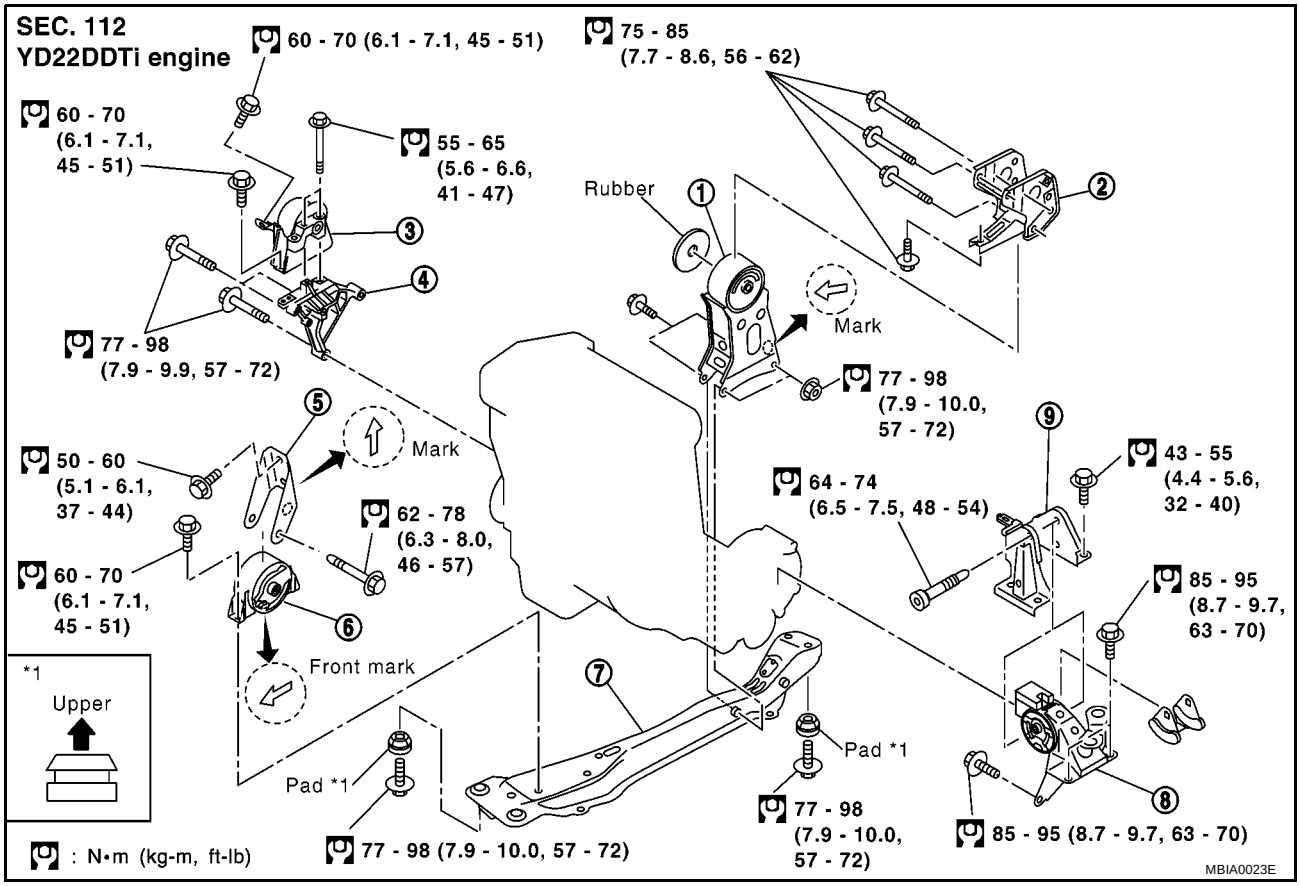

1. Rear engine mounting insulator	2. Rear engine mounting bracket	3. RH engine mounting insulator
4. RH engine mounting bracket	5. Front engine mounting bracket	6. Front engine mounting insulator
7. Center member	8. LH engine mounting insulator	9. LH engine mounting bracket

WARNING:

- **Situate vehicle on a flat and solid surface.**
- **Place chocks at front and back of rear wheels.**
- **For engines not equipped with engine slingers, attach proper slingers and bolts described in PARTS CATALOG.**

CAUTION:

- **Always be careful to work safely, avoid forceful or uninstructed operations.**
- **Do not start working until exhaust system and coolant are cool enough.**
- **If items or work required are not covered by the engine main body section, refer to the applicable sections.**
- **Always use the support point specified for lifting.**
- **Use either 2-pole lift type or separate type lift as best you can. If board-on type is used for unavoidable reasons, support at the rear axle jacking point with transmission jack or similar tool before starting work, in preparation for the backward shift of center of gravity.**
- **For supporting points for lifting and jacking point at rear axle, refer to GI-43, “Lifting Points and Tow Truck Towing”.**

REMOVAL

Preparation

1. Remove engine hood.
2. Drain coolant from radiator drain plug.
3. Remove the following parts.
   - LH/RH undercover
   - LH/RH front wheel

- Battery
- Engine cover
- Auxiliary drive belt; Refer to EM-118, "Removal and Installation" .
- Air duct and air cleaner case assembly; Refer to EM-119, "Removal and Installation" .
- Alternator and brackets
- Radiator and radiator fan assembly; Refer to LC-39, “Radiator”.

4. Disconnect engine room harness from the engine side and set it aside for easier work.
5. Disconnect all the body-side vacuum hoses and air hoses at engine side.

Engine room LH

6. Disconnect fuel feed and return hoses, and plug it to prevent fuel from draining.
7. Disconnect heater hose, and install plug it to prevent engine coolant from draining.
8. Remove clutch operating cylinder from transaxle, and move it aside.
9. Disconnect shift cable from transaxle. (6M/T vehicle)

Engine room RH

10. Remove air conditioner compressor with piping connected from engine. Temporarily secure it on body with a rope to avoid putting load on it.

Vehicle underbody

11. Remove exhaust front tube.
12. Disconnect two hoses from power steering pump and plug to stop fluid.
13. Remove MT control rod and support rod. (5M/T vehicle).
14. Remove ABS sensor from brake caliper.
15. Remove brake caliper with piping connected from steering knuckle. Temporarily secure it on body with a rope to avoid load on it.
16. Remove LH/RH drive shafts ; Refer to AX-11, “Removal”.

Removal

17. Install engine slingers into front right of cylinder head and rear left of cylinder head.

    Slinger bolts:

    : 30 - 37 N·m (3.0 - 3.8 kg-m, 22 - 27 ft-lb)

18. Lift up vehicle to appropriate level where work can be performed efficiently. Using two transmission jacks, securely support engine oil pan and bottom surface of transaxle.

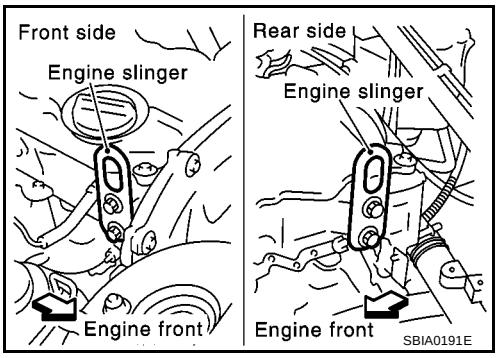

CAUTION:

- **Make sure that support is stable with the use of safety blocks.**

19. Install hooks of lifting chain into engine slingers and tighten chain so that engine still remains on transmission jacks without being lifted up.
20. Remove engine mount insulator RH.
21. Remove through-bolt of engine mount insulator LH.
22. Remove bolts securing center member at front and rear.

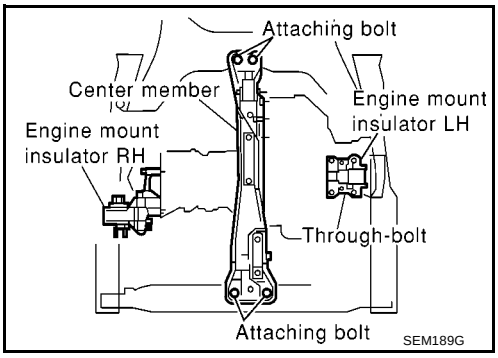

23. Carefully lower transmission jacks in accordance with the lowering pace of the hoist, and remove engine and transaxle assembly from vehicle.

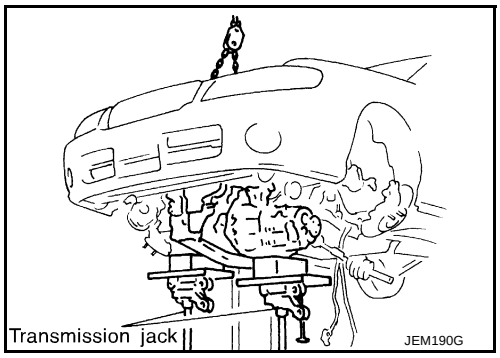

CAUTION:

- **While working, check that no parts of engine assembly interfere with adjacent parts on the vehicle.**
- **While working, make sure that parts requiring disconnection are not left connected, and that no parts interfere with vehicle.**
- **to prevent vehicle from falling down, perform operation carefully so that the center of gravity of the vehicle will not shift.**

24. Remove center member.

CAUTION:

- **Before starting removal operation, first place the assembly on a level surface and securely support the bottom surface with wood blocks Using a hoist, lift engine slingers and make sure the assembly is stable.**

25. Separate engine and transaxle.

INSTALLATION

Install in the reverse order of removal.

- Do not allow oil to get on mounting insulator. Be careful not to damage mounting insulator.
- When installation directions are specified, install parts according to the direction marks on them referring to components illustration.
- Make sure that each mounting insulator is seated properly, and tighten mounting bolts and nuts.

INSPECTION AFTER INSTALLATION

- Before starting engine check the levels of coolant, lubrications and working oils. If less than required quantity, fill to the specified level.
- Before starting engine, bleed air from fuel piping. Refer to FE-18, “Bleeding Fuel Filter”.
- Run engine to check for unusual noise and vibration.
- Warm up engine thoroughly to make sure there is no leakage of coolant, lubricants, working oil, fuel and exhaust gas.
- Bleed air from passages in pipes and tubes of applicable lines.

CYLINDER BLOCK

PFP:11010

Disassembly and Assembly

EBS00QFX

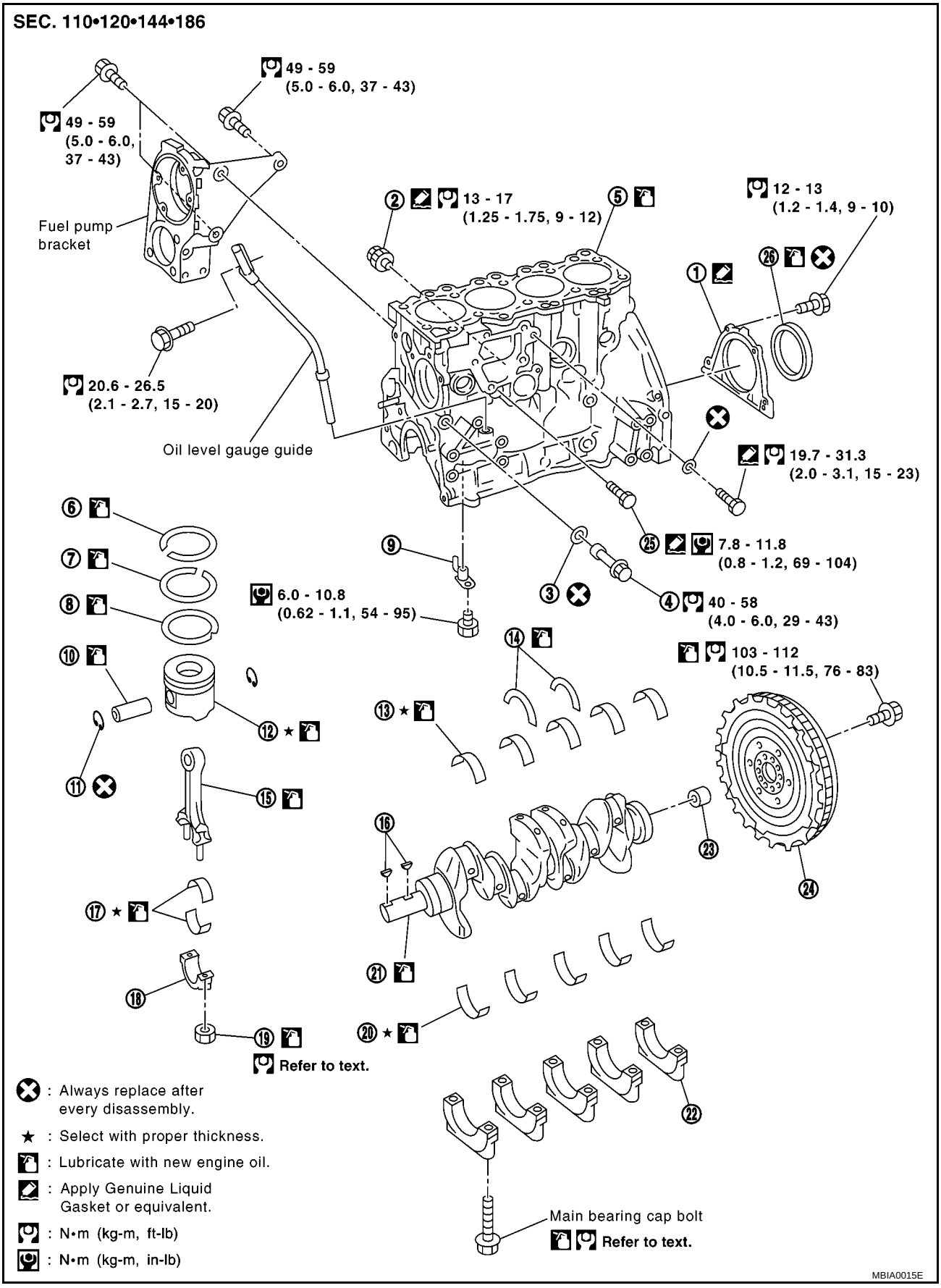

1.	Rear oil seal retainer	2.	Oil pressure switch	3.	Coppet washer
4.	Oil jet relief valve	5.	Cylinder block	6.	Top ring
7.	Second ring	8.	Oil ring	9.	Oil jet
10.	Piston pin	11.	Snap ring	12.	Piston
13.	Main bearing	14.	Thrust bearing	15.	Connecting rod
16.	Key	17.	Connecting rod bearing	18.	Connecting rod cap
19.	Connecting rod nut	20.	Main bearing	21.	Crankshaft
22.	Main bearing cap	23.	Pilot bush	24.	Flywheel
25.	Drain plug	26.	Rear oil seal		

CAUTION:
Apply new engine oil to parts marked in illustration before installation.

DISASSEMBLY

1. Remove engine assembly from the vehicle, then separate engine and transaxle. Refer to EM-197, "ENGINE ASSEMBLY" .
2. Remove clutch cover and disk. Refer to CL-22 (5MT), CL-16 (6MT).
3. Install engine to engine stand as follows.

a. Remove flywheel.

b. Secure ring gear with ring gear stopper, then loosen mounting bolts with TORX bit (size: Q6T55 E9, Commercial Service Tools) and remove them. As an alternative method hold the crankshaft pulley with a pulley holder (SST) to remove the flywheel.

CAUTION:
Do not disassemble flywheel.

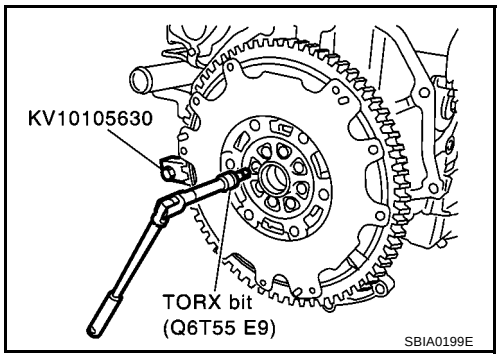

c. Install engine sub-attachment to the rear side of cylinder block.
   - Align knock pins on cylinder block with pin holes on attachment to install.

   NOTE:
   Installation bolts are part of engine sub-attachment.

d. Install engine attachment.

   NOTE:
   Use commercially available M12 (0.47 in) mounting bolts and nuts (4 sets) with strength grade of 9T (minimum).

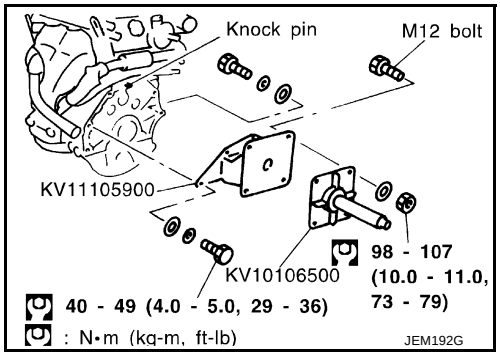

e. Hoist engine and install it to the engine stand.

NOTE:
It is possible to set engine sub-attachment and engine attachment to engine stand at first, then install engine later.

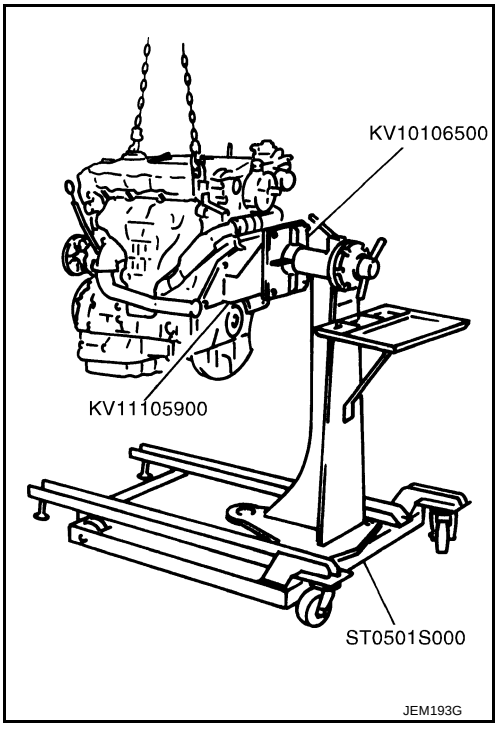

- Commercial engine stand can be used.

NOTE:
The figure shows an example of general-purpose engine stand that can hold mating surface of transmission with drive plate and rear plate removed.

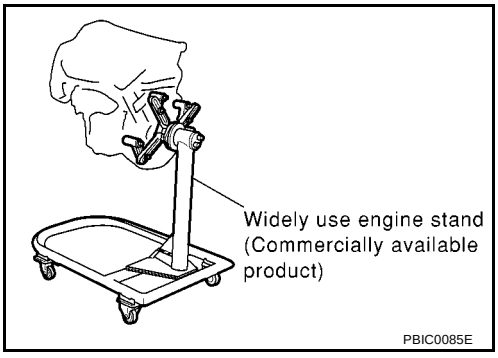

4. Drain engine oil and coolant from inside engine.
5. Remove the following parts and related parts. (Only major parts are listed.)
   - Intake manifold (Refer to EM-123, "Removal and Installation" .)
   - Exhaust manifold and turbocharger (Refer to EM-128, "Removal and Installation" .)
   - Rocker cover (Refer to EM-160, "Removal and Installation").
   - Injection tube and fuel injector (Refer to EM-147, "Removal and Installation" .)
   - Oil pan and oil strainer (Refer to EM-137, "Removal and Installation" .)
   - Water pump (Refer to LC-35, “Water Pump”.)
   - Thermostat and water piping (Refer to LC-37, “Thermostat”.)
   - Vacuum pump (Refer to EM-143, "Removal and Installation" .)
   - Secondary timing chain (Refer to EM-171, "Removal and Installation")
   - Primary timing chain (Refer to EM-176, "Removal and Installation" .)
   - Fuel pump (Refer to EM-150, "Removal and Installation" .)
   - Camshaft (Refer to EM-162, "Removal and Installation" .)
   - Cylinder head (Refer to EM-187, "Removal and Installation" .)
   - Oil cooler (Refer to LC-30, “Oil Cooler”.)
   - Accessory, accessory bracket and mount brackets
6. Remove fuel supply pump bracket.

7. If they need to be replaced, replace pilot bushing.
   - Using pilot bushing puller, remove the bushing from rear edge of crankshaft.

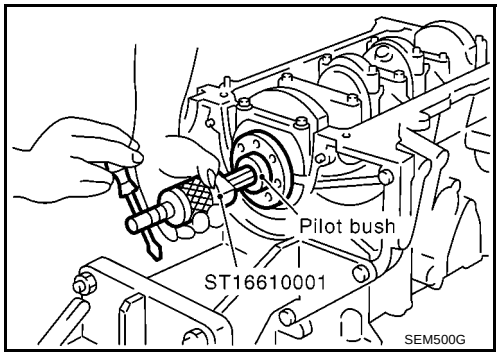

8. Remove rear oil seal retainer.
   - Insert a flat-bladed screwdriver between main bearing cap and rear oil seal retainer to remove retainer.
9. Remove rear oil seal from rear oil seal retainer.
   - Punch out with a flat-bladed screwdriver.
   - **Be careful not to damage rear oil seal retainer.**
10. Remove piston and connecting rod assembly.
    - Before removing piston and connecting rod assembly, check connecting rod side clearance.
      Refer to EM-214, "CONNECTING ROD SIDE CLEARANCE" .

a. Move crankshaft pin to be removed to approximately BDC.
b. Remove connecting rod caps.
c. Using the grip of a hammer, press the piston and connecting rod assembly out to cylinder head side.

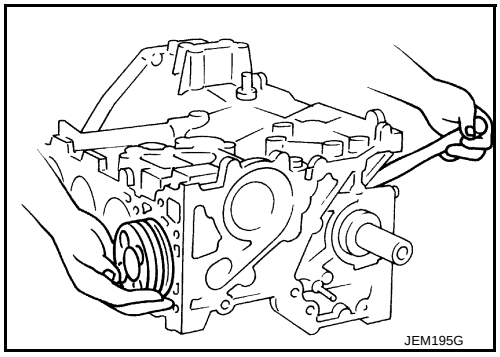

CAUTION:
When removing the piston and connecting rod assembly, prevent the big end of the connecting rod from interfering with the oil jet.

11. Remove connecting rod bearings from connecting rods and caps.
    - Keep them by cylinder to avoid confusion.

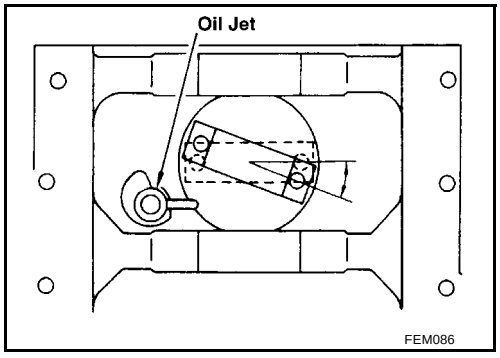

12. Remove piston rings from pistons using piston ring expander.

CAUTION:
- **When removing, prevent pistons from being damaged.**
- **Do not expand piston rings excessively. This may damage the piston rings.**

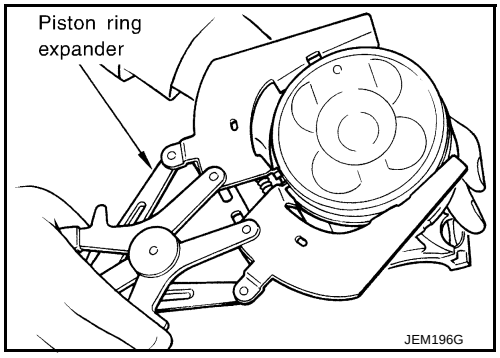

13. Remove pistons from connecting rods.

a. Using long nose pliers, remove snap rings.

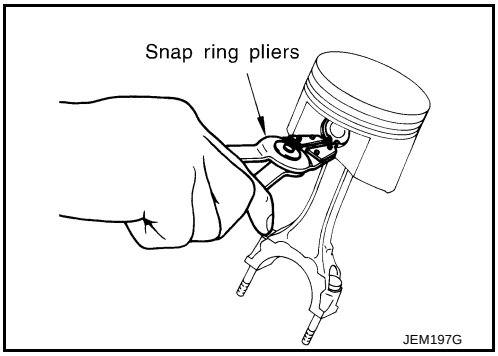

b. Using industrial dryer, heat pistons up to 60 to 80°C (140 to 176°F).

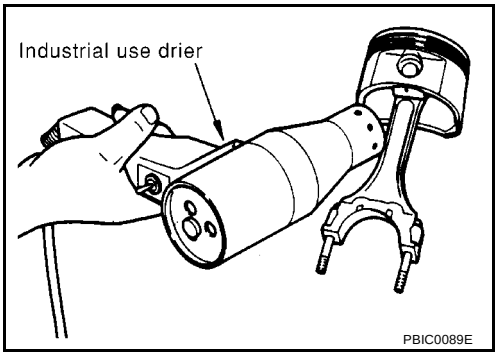

c. Using rod with outer diameter of 26 mm (1.02 in), press piston pins out.

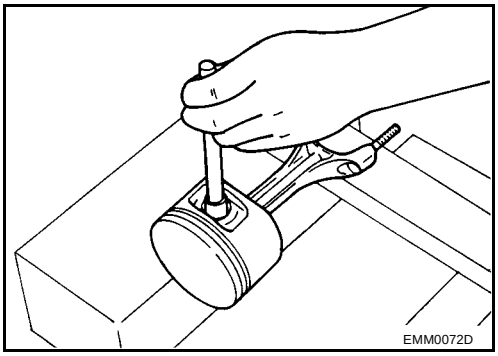

14. Remove main bearing cap bolts.
    - With a TORX socket (size: E-14,Commercial Service Tool), loosen main bearing cap bolts in several stages in the reverse order of that shown in the figure and remove them.
    - Before loosening main bearing cap bolts, measure crankshaft side clearance. Refer to EM-213, "CRANKSHAFT SIDE CLEARANCE" .

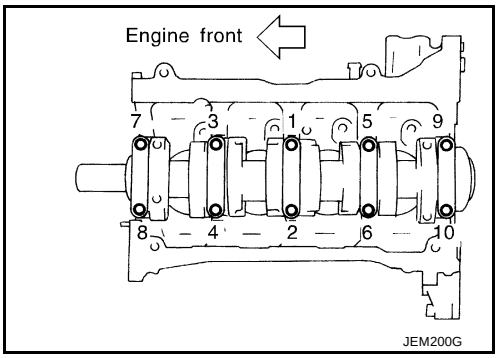

15. Remove main bearing caps.
    - Using main bearing cap bolts, remove by rocking bearing cap back and forth.
16. Remove crankshaft.
17. Remove main bearings and thrust bearings from cylinder block and main bearing caps.
    - **Check the correct installation locations of removed parts. Store them so they do not get mixed up.**
18. Remove oil jet.
19. Remove oil jet relief valve.

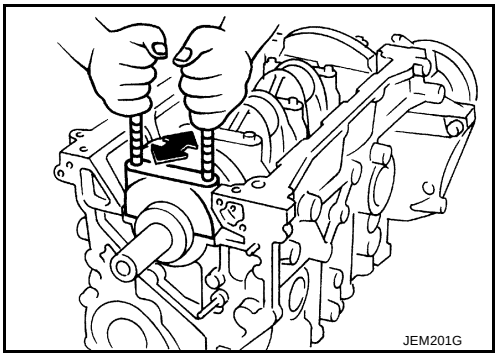

ASSEMBLY

1. Blow air sufficiently to inside coolant passage, oil passage, crankcase and cylinder bore to remove foreign matter.
2. Install oil jet relief valve.
3. Install oil jet.
   - Align knock pin on back of oil jet with hole on block when installing oil jet.

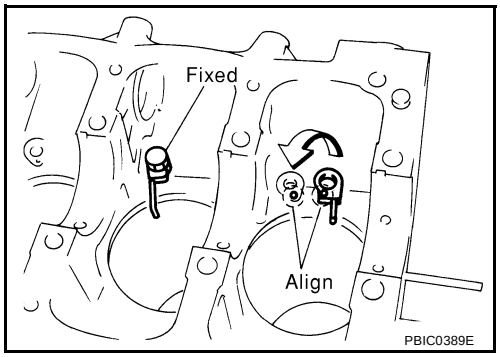

4. Install main bearings and thrust bearings.

a. Remove contamination, dust and oil from bearing mounting positions on cylinder block and main bearing caps.

b. Install thrust bearings on both sides of No. 3 housing on cylinder block.
   - Install thrust bearings with oil groove facing to crankshaft arm (outside).

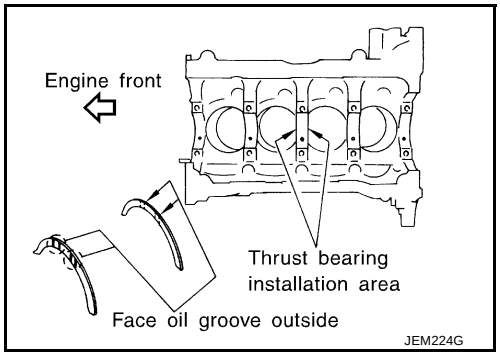

c. Being careful with the direction, install main bearings.
   - Install main bearings with the oil holes and grooves onto the cylinder block side, and those without oil holes and grooves onto the main cap side.
   - While installing bearings, apply engine oil to bearing surfaces (inside). Do not apply oil to rear surfaces, but clean them completely.
   - Align stopper notches on bearings to install them.
   - Check that the oil holes on the cylinder block body are mated with the oil hole positions on the bearings.

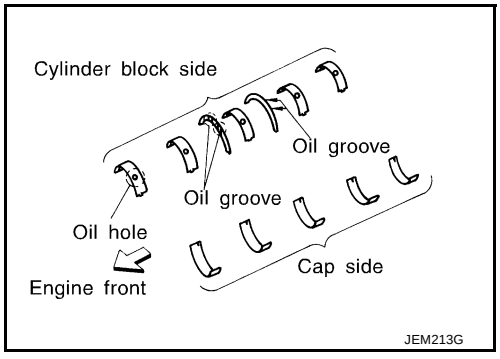

5. Install crankshaft to cylinder block.
   - Make sure crankshaft rotates smoothly by hand.
6. Install main bearing caps.
   - Identify main bearing caps by the punched mark. Install correctly matching the journal No.on the bearing cap and the journal with the front mark facing forward.
   - Main bearing caps are commonly processed with the cylinder block. Therefore, caps and cylinder block should be replaced as a set.
7. Check the main bearing cap bolts for deformation.
   Refer to EM-220, "MAIN BEARING CAP BOLT DEFORMATION" .

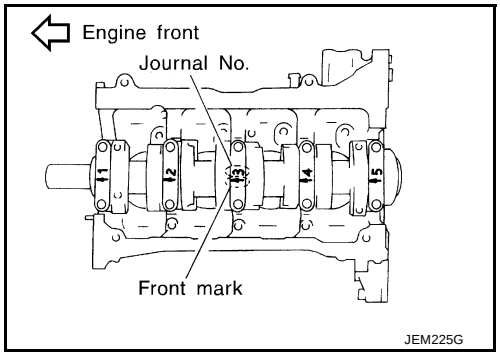

8. Tighten the main bearing cap bolts according to the following procedure:
a. Apply engine oil to the threaded part and seat surface of each bolt.
b. Tighten to 24 to 30 N·m (2.5 to 3.1 kg-m, 18 to 22 ft-lb) in the numerical order shown in the figure.
c. Put alignment marks (with paint) on each bolt and the main bearing cap, all in the same direction. (When using a protractor)

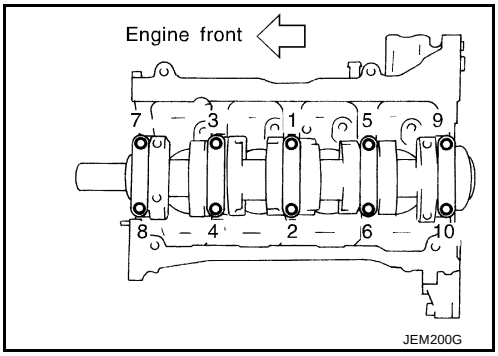

d. Then, tighten 90° to 95° [target: 90°].
   - **Always use either an angle wrench (SST) or protractor during angular tightening. Avoid tightening based on visual checks alone.**
   - After tightening bolts to specified torque, make sure that crankshaft rotates smoothly.
   - Check crankshaft end side clearance. Refer to EM-213, "CRANKSHAFT SIDE CLEARANCE" .

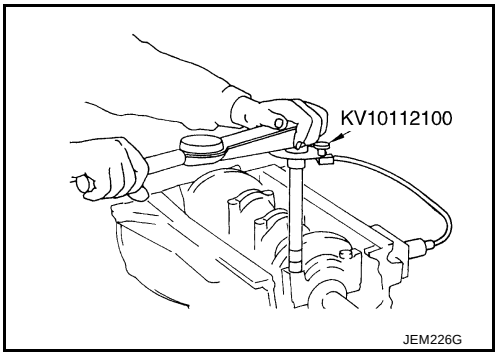

9. Check the outer diameter of connecting rod bolts. Refer to EM-221, "CONNECTING ROD BOLT DEFORMATION" .
10. Install pistons to connecting rod.
a. Using long nose pliers, install snap rings to grooves on piston rear side.
   - Fit snap rings correctly into grooves.
b. Install pistons to connecting rods.
   - Using industrial dryer, heat pistons up to approx. 60 to 70°C (140 to 158°F) until piston pin can be pressed down by finger touch. Then insert piston pins into piston and connecting rod from front side of piston toward rear.
   - Assemble piston and connecting rod with front mark of piston crown and cylinder No. stamped on connecting rod being positioned as shown in the figure.
c. Install snap rings to front side of pistons.
   - Refer to above step a for precaution on snap ring installation.
   - After installation, check connecting rods for smooth movement.

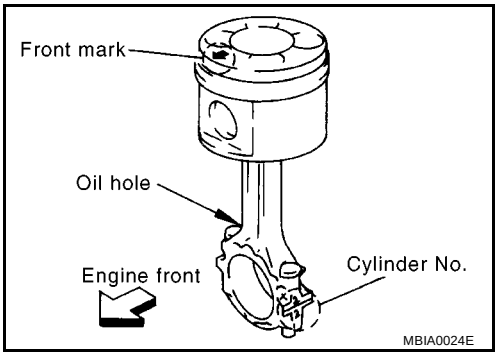

11. Use piston ring expander to install piston rings.

CAUTION:
When installing, prevent piston from being damaged.

- Install top ring and second ring with stamped surfaces facing upward.

Identification stamp:

Top ring	**: RTop**
Second ring	**: R2ND**

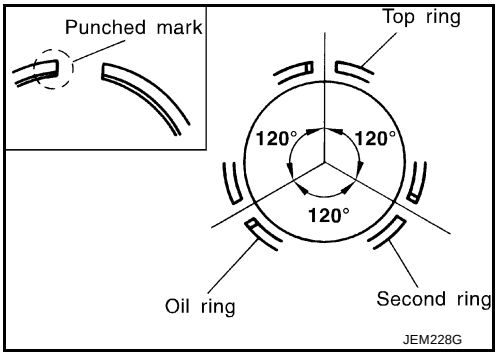

- Install rings so that three closed gap position 120° apart one another.
- Closed gaps do not need to face in a specific directions, as long as each are positioned 120° apart.

12. Install connecting rod bearings to connecting rods and caps.
    - While installing connecting rod bearings, apply engine oil to bearing surfaces (inside). Do not apply oil to rear surfaces, but clean them completely.
    - Align stoppers on connecting rod bearings with connecting rod stopper notches to install connecting rod bearings.

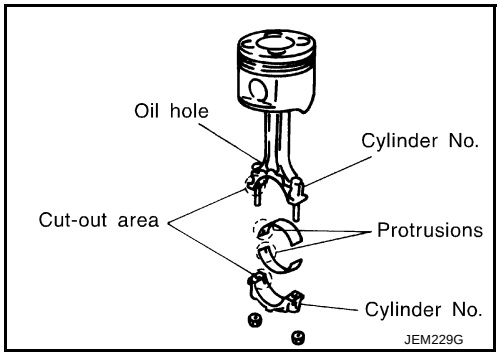

13. Install piston and connecting rod assembly to crankshaft.
    - Move crankshaft pin to be assembled to BDC.
    - Align cylinder position with cylinder No. on connecting rod to install piston and connecting rod assembly.
    - Using piston ring compressor, install piston and connecting rod assembly with front mark on piston crown facing toward the front side of engine.

    CAUTION:
    When installing piston and connecting rod assembly, prevent the big end of connecting rod from interfering with oil jet.

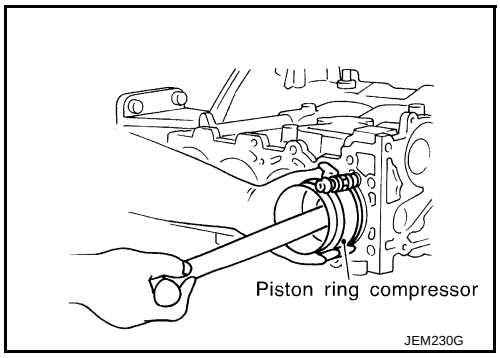

14. Install connecting rod caps and mounting nuts.
    - Align cylinder No. stamped on connecting rod with that on cap to install connecting rod cap.
    - Make sure that the front mark on connecting rod cap faces towards the front of the engine.

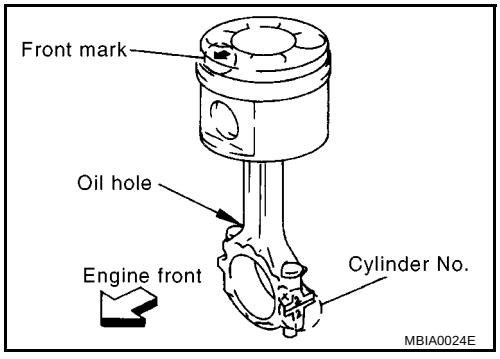

15. Tighten connecting rod nuts according to the following procedure:

a. Apply engine oil on bolt threads and seat surface of nuts.
b. Tighten to 29 to 30 N·m (2.9 to 3.1 kg-m, 21 to 22 ft-lb).
c. Loosen completely to 0 N·m (0 kg-m, 0 in-lb).
d. Tighten to 19 to 20 N·m (1.9 to 2.1 kg-m, 14 to 15 ft-lb).
e. Tighten 120° to 125° [target: 120°]. (angular tightening)

    - **Always use either an angle wrench (SST) or protractor during angular tightening. Avoid tightening based on visual checks alone.**
    - After tightening nuts, check that crankshaft rotates smoothly.
    - Check connecting rod side clearance. Refer to EM-214, "CONNECTING ROD SIDE CLEARANCE" .

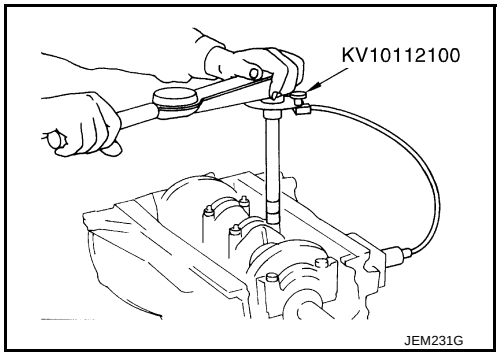

16. Force fit rear oil seal into rear oil seal retainer.
    - Using a drift [105 mm (4.13 in) dia.], force fit so that the dimension is as specified in the figure.
    - Avoid inclined fitting. Force fit perpendicularly.
    - **Do not touch lips of oil seal. Make sure seal surfaces are free foreign materials.**

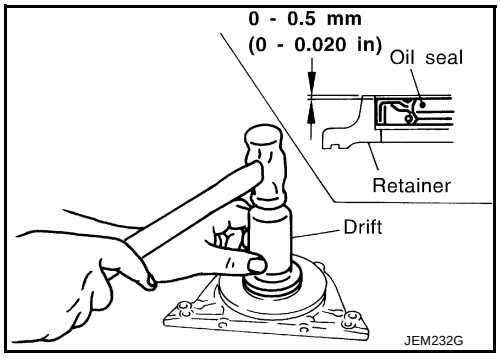

17. Install rear oil seal and retainer assembly.
    - Apply a continuous bead of liquid gasket to rear oil seal and retainer assembly as shown in the figure.

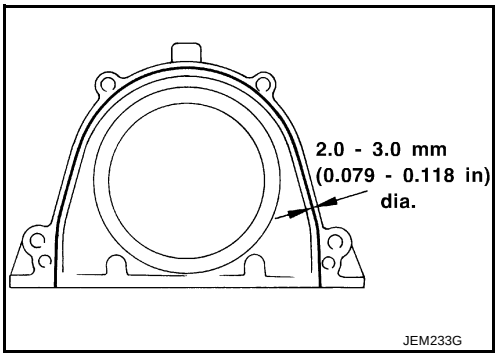

18. Press fit pilot bushing into flywheel.
    - Using drift with outer diameter of 19 mm (0.75 in), press fit pilot bushing until it stops.

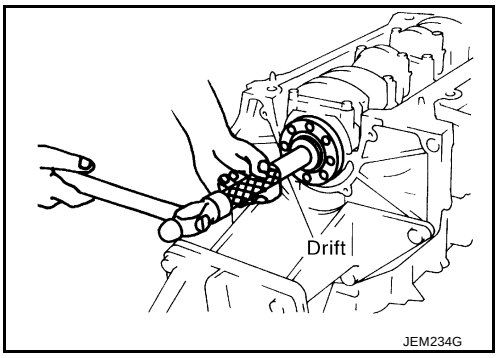

19. Install fuel supply pump bracket.
    - Align the bracket with the dowel pins on the block to install.
    - The two bolts used for dowel pins have a longer shanks than the other two.
20. Install parts to the engine in the reverse order of disassembly.
21. Remove engine from engine stand in the reverse order of assembly.

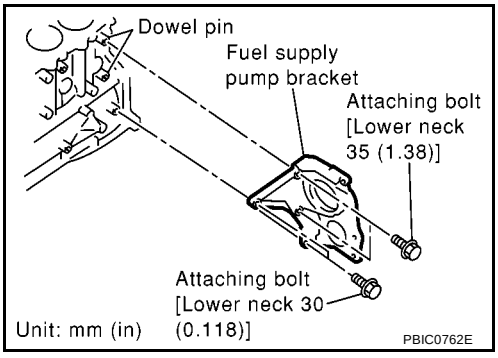

22. Install flywheel.
    - When installing flywheel to crankshaft, be sure to correctly align crankshaft side dowel pin and flywheel side dowel pin-hole.

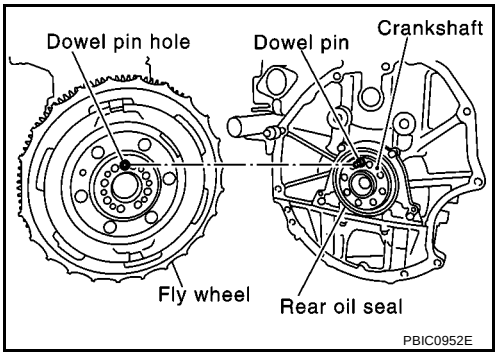

- There is a mating mark on the clutch cover side, Refer it during installation.

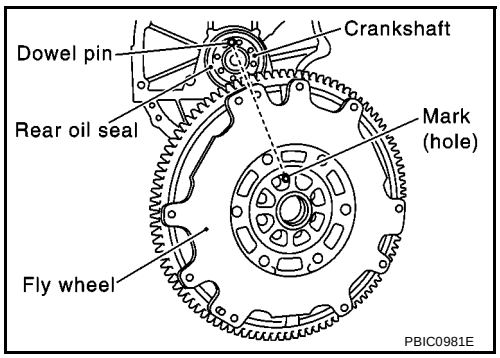

- Holding ring gear with ring stopper (SST), tighten securing bolts with TORX bit (size: Q6T55 E9, Commercial Service Tool).
- Tighten bolts uniformly in a crisscross manner.

How to Select Piston and Bearing

EBS00QFY

DESCRIPTION

Selection points	Selection parts	Selection items	Selection methods
Between cylinder block to crankshaft	Main bearing	Main bearing grade (bearing thickness)	Determined by match of cylinder block bearing housing grade (inner diameter of housing) and crankshaft journal grade (outer diameter of journal)
Between crankshaft to connecting rod	Connecting rod bearing	Connecting rod bearing grade (bearing thickness)	Combining service grades for connecting rod bearing and crankshaft pin outer diameter determine connecting rod bearing selection.
Between cylinder block to piston	Piston and piston pin assembly The piston is available together with piston pin as an assembly.	Piston grade (piston outer diameter)	Piston grade = cylinder bore grade (inner diameter of bore)

- The identification grade stamped on each part is the grade for the dimension measured in new condition. This grade cannot apply to reused parts.
- For reused or repaired parts, measure the dimension accurately. Determine the grade by comparing the measurement with the values of each selection table.
- For details of the measurement method of each part, the reuse standards and the selection method of the selective fitting parts, refer to the text.

HOW TO SELECT PISTON

When Using New Cylinder Block

1. Identify the cylinder bore grade (No. 1, 2, or 3) on LH surface at the rear of cylinder block.
2. Select the piston of the same grade.

- The part No. of piston is specified together with the piston pin as an assembly.

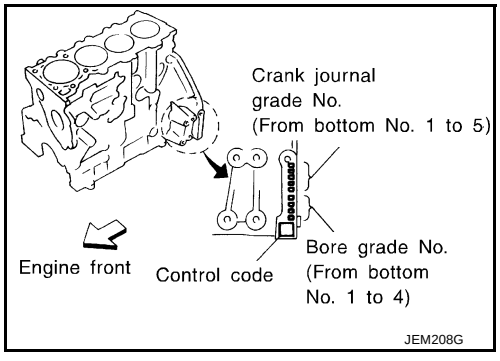

When Re-using an Old Cylinder Block

1. Measure cylinder block bore inner diameter.
2. Referring to “Cylinder block bore inner diameter” in “Piston Selection Table”, determine the bore grade.
3. Select the piston of the same grade.

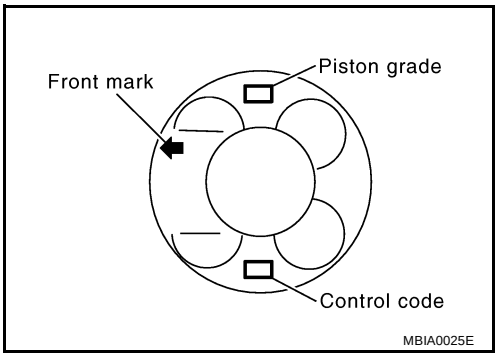

Piston Selection Table

Unit: mm (in)

Grade (punched)	1	2	3
Cylinder bore inner diameter	86.000 - 86.010(3.3858 - 3.3862)	86.010 - 86.020(3.3862 - 3.3866)	86.020 - 86.030(3.3866 - 3.3870)
Piston outer diameter	85.928 - 85.942(3.3830 - 3.3835)	85.938 - 85.952(3.3834 - 3.3839)	85.948 - 85.962(3.3838 - 3.3843)

HOW TO SELECT CONNECTING ROD BEARING

When Using a New Crankshaft and Connecting Rod

1. Identify the pin diameter grade (No. 0, 1, or 2) on front surface of crankshaft.
2. Select the connecting rod bearings of the same grade.
   - There is no grading for the inner diameter of the big end of the connecting rod.

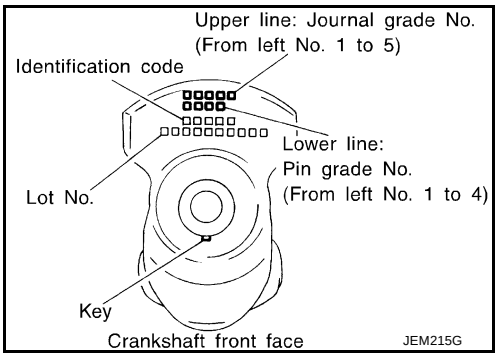

When Re-using the Removed Crankshaft and Connecting Rod

1. Measure the inner diameter of the big end of the connecting rod and make sure it is within the specified range.
2. Measure the outer diameter of the crankshaft pin.
3. Determine the crankshaft pin grade by comparing the measurement with the values under the column “Crankshaft pin outer diameter” of the table below.
4. Choose the bearings of the same grade.

Selection Table of connecting Rod Bearing

Unit: mm (in)

Connecting rod big end inner diameter		55.000 - 55.013 (2.1654 - 2.1659)	
Crankshaft pin outer diameter	Grade (punched)	0 (no punching)	
51.968 - 51.974 (2.0460 - 2.0462)	0	● Bearing grade No. ● Bearing thickness ● Oil clearance ● Identification color	STD 0 1.492 - 1.496 (0.0587 - 0.0589) 0.031 - 0.061 (0.0012 - 0.0024) Black

51.961 - 51.968 (2.0457 - 2.0460)	1	● Bearing grade No. ● Bearing thickness ● Oil clearance ● Identification color	STD 1 1.496 - 1.500 (0.0589 - 0.0591) 0.031 - 0.061 (0.0012 - 0.0024) Brown
51.954 - 51.961 (2.0454 - 2.0457)	2	● Bearing grade No. ● Bearing thickness ● Oil clearance ● Identification color	STD 2 1.500 - 1.504 (0.0591 - 0.0592) 0.031 - 0.061 (0.0012 - 0.0024) Green

Under Size Bearing Usage

- If bearing clearance is out of specifications for connecting rod bearings in standard size, use under size bearings.
- When using under size bearings, measure bearing inner diameter with bearing installed, and grind crankshaft pins to adjust clearance to specification.

Connecting Rod Bearing Under Size list

Unit: mm (in)

Size	Thickness
US 0.08 (0.0031)	1.536 - 1.540 (0.0605 - 0.0606)
US 0.12 (0.0047)	1.556 - 1.560 (0.0613 - 0.0614)
US 0.25 (0.0098)	1.621 - 1.625 (0.0638 - 0.0640)

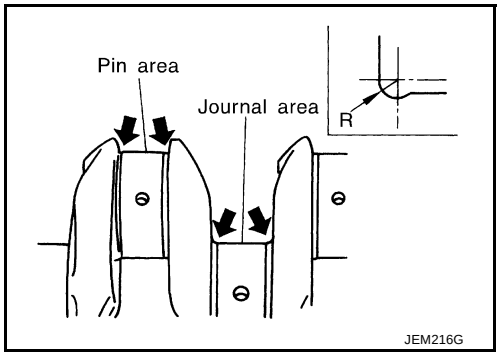

CAUTION:
When grinding the crankshaft journal to use an under size bearing, avoid damaging the fillet R.

Standard dimension R : 1.5 - 1.7 mm (0.0591 - 0.0669 in)

HOW TO SELECT MAIN BEARING

When Using a New Cylinder Block and Crankshaft

1. Identify the bearing housing grade (No. 0, 1, or 2) on LH surface at the rear of the cylinder block, and locate the applicable grade on the “Grade” row in the table below.
2. Identify the journal grade (No. 0, 1, or 2) on the front surface of the crankshaft, and locate the applicable grade under the “Grade” column on the table.
3. The main bearing to be used (STD 0 to STD 4) can be located in the cell where the row and column cross.

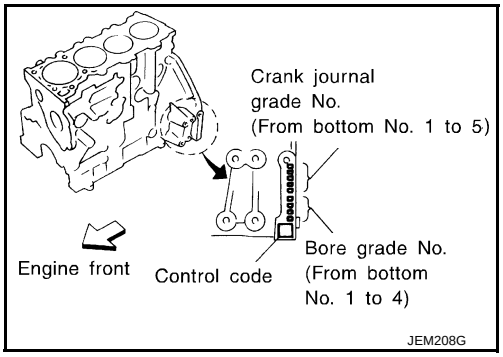

When Re-using Removed Cylinder Block and Crankshaft

1. Measure the inner diameter of cylinder block main bearing housing.
2. Locate the applicable cell where the measurement falls, on “Inner diameter of cylinder block main bearing housing” row on the table.
3. Measure the outer diameter of the crankshaft journal.
4. Locate the applicable cell where the measurement falls, under “Crankshaft journal outer diameter” column on the table.
5. The main bearing to be used (STD 0 to STD 4) can be located in the cell where the row and column cross.

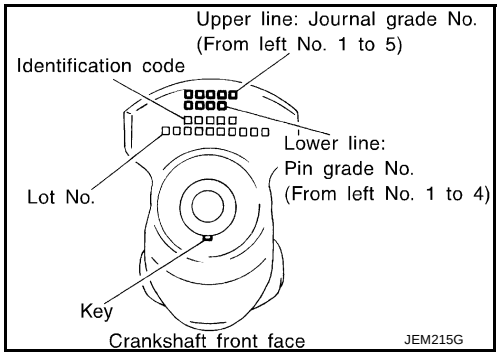

Main Bearing Grade Table

Unit: mm (in)

Inner diameter of cylinder block main bearing housing			66.654 - 66.663 (2.6242 - 2.6245)	66.663 - 66.672 (2.6245 - 2.6249)	66.672 - 66.681 (2.6249 - 2.6252)
Crankshaft journal outer diameter	Grade (punched)		0	1	2
62.967 - 62.975 (2.4790 - 2.4793)	0	● Bearing grade No. ● Bearing thickness ● Oil clearance ● Identification color	STD 0 1.816 - 1.820 (0.0715 - 0.0717) 0.039 - 0.066 (0.0015 - 0.0026) Black	STD 1 1.820 - 1.824 (0.0717 - 0.0718) 0.039 - 0.066 (0.0015 - 0.0026) red	STD 2 1.824 - 1.828 (0.0718 - 0.0720) 0.039 - 0.066 (0.0015 - 0.0026) Green
62.959 - 62.967 (2.4787 - 2.6790)	1	● Bearing grade No. ● Bearing thickness ● Oil clearance ● Identification color	STD 1 1.820 - 1.824 (0.0717 - 0.0718) 0.039 - 0.066 (0.0015 - 0.0026) red	STD 2 1.824 - 1.828 (0.0718 - 0.0720) 0.039 - 0.066 (0.0015 - 0.0026) Green	STD 3 1.828 - 1.832 (0.0720 - 0.0721) 0.039 - 0.066 (0.0015 - 0.0026) Yellow
62.951 - 62.959 (2.4784 - 2.4787)	2	● Bearing grade No. ● Bearing thickness ● Oil clearance ● Identification color	STD 2 1.824 - 1.828 (0.0718 - 0.0720) 0.039 - 0.066 (0.0015 - 0.0026) Green	STD 3 1.828 - 1.832 (0.0720 - 0.0721) 0.039 - 0.066 (0.0015 - 0.0026) Yellow	STD 4 1.832 - 1.836 (0.0721 - 0.0723) 0.039 - 0.066 (0.0015 - 0.0026) Blue

Under Size Bearing Usage

- If bearing clearance is out of specifications for connecting rod bearings in standard size, use under size bearings.
- When using under size bearings, measure bearing inner diameter with bearing installed, and grind crankshaft journals to adjust clearance to specification.

Main Bearing Under Size List

Unit: mm (in)

Size	Thickness
US 0.25(0.0098)	1.949 - 1.953 (0.0767 - 0.0769)

CAUTION:
When grinding crank journals to use undersize bearings, keep corners radius of fillet. (All journals)

Standard dimension R : 1.5 - 1.7 mm (0.0591 - 0.0669 in)

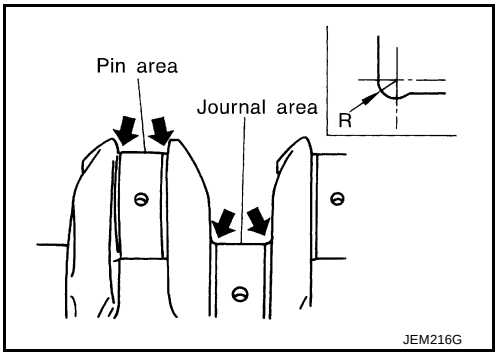

Inspection After Disassembly

EBS00QFZ

CRANKSHAFT SIDE CLEARANCE

- Using dial indicator, measure crankshaft travel amount by moving the crankshaft forward or backward.

Standard : 0.10 - 0.25 mm (0.0039 - 0.0098 in)

Limit : 0.30 mm (0.0118 in)

- If the value exceeds the limit, replace thrust bearings with new ones and measure again.
  If the measurement exceeds the limit again, replace crankshaft with a new one.

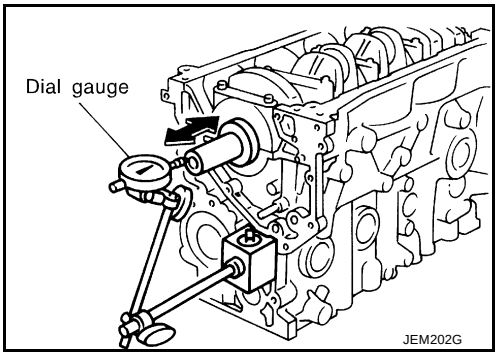

CONNECTING ROD SIDE CLEARANCE

- Using feeler gauge, measure side clearance between connecting rod and crankshaft arm.

  Standard : 0.200 - 0.350(0.0079 - 0.0138 in)
  Limit : 0.4 mm (0.0157 in)

- If measured value exceeds the limit, replace connecting rod and repeat measurement.
  If measured value still exceeds the limit, replace crankshaft.

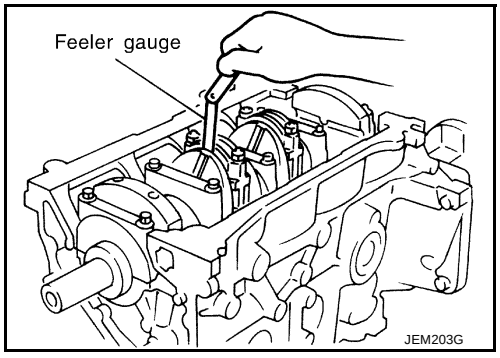

PISTON TO PISTON PIN CLEARANCE

Piston Pin Hole Inner Diameter

Using inside micrometer, measure piston pin hole inner diameter.

Standard : 28.003 - 28.009 mm (1.1025 - 1.1027 in)

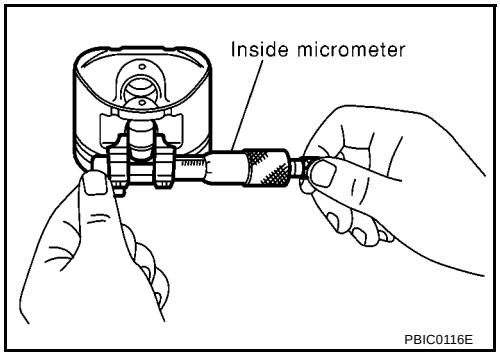

Piston Pin Outer Diameter

Using micrometer, measure piston pin outer diameter.

Standard : 27.995 - 28.000 mm (1.1022 - 1.1024 in)

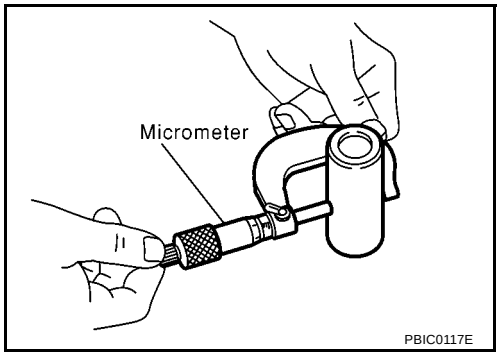

Calculation of Piston to Piston Pin Clearance

(Piston pin clearance) = (Piston pin hole inner diameter) – (Piston pin outer diameter)

Standard : 0.003 - 0.014 mm (0.0001 - 0.0006 in)

- If clearance is exceeds specification, replace either or both piston/piston pin assembly.

PISTON RING SIDE CLEARANCE

- Using feeler gauge, measure clearance between piston ring and piston ring groove.

Unit: mm (in)

Item	Standard	Limit
Top ring	0.050- 0.090 (0.0020 - 0.0035)	0.2 (0.008)
2nd ring	0.050 - 0.090 (0.0020 - 0.0035)	0.1 (0.004)
Oil ring	0.030 - 0.070 (0.0012 - 0.0028)	—

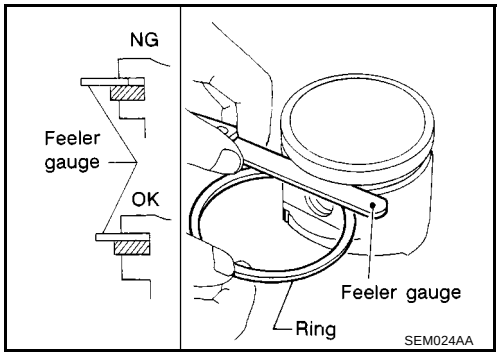

- Align top ring and external surface of piston. Measure lower side clearance of top ring with top ring pressed onto upper side of ring groove.
- If side clearance exceeds the limit, replace piston ring.
- Check clearance again. If side clearance still exceeds the limit, replace piston.

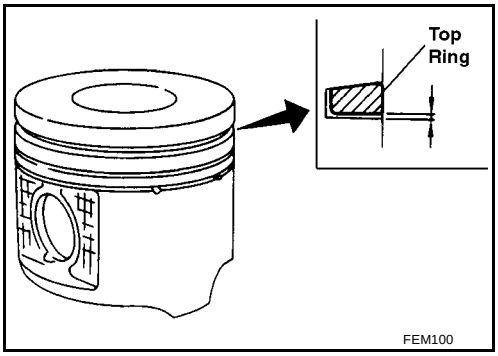

PISTON RING END GAP

- Check that cylinder bore diameter is within specifications. Refer to EM-217, "PISTON TO CYLINDER BORE CLEARANCE" .
- Using piston, press piston ring to cylinder mid point, and measure end gap.

Unit: mm (in)

Item	Standard	Limit
Top ring	0.20 - 0.30 (0.0079 - 0.0118)	1.0 (0.039)
2nd ring	0.31 - 0.51 (0.0122 - 0.0201)	
Oil ring	0.30 - 0.55 (0.0118 - 0.0217)	

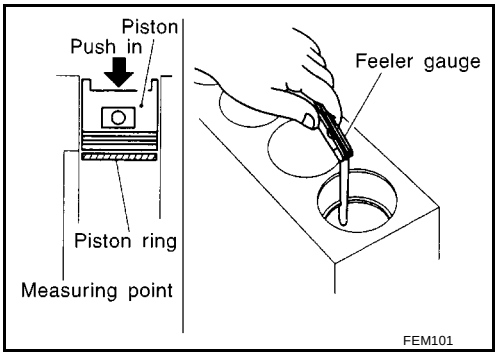

CONNECTING ROD BEND AND TORSION

Use connecting rod aligner to check bend and torsion.

Bend limit : 0.12 mm (0.0047 in)/100 mm (3.94 in)

Torsion limit : 0.12 mm (0.0047 in)/100 mm (3.94 in)

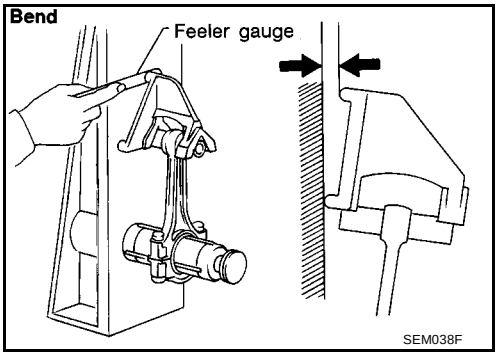

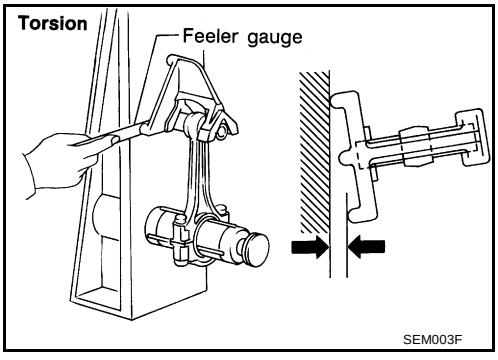

CONNECTING ROD BIG END INNER DIAMETER

- Install connecting rod caps without connecting rod bearings and tighten connecting rod nuts to the specified torque. Using inside micrometer, measure connecting rod big end inner diameter.

  Standard : 55.000 - 55.013 mm (2.1654 - 2.1659 in)

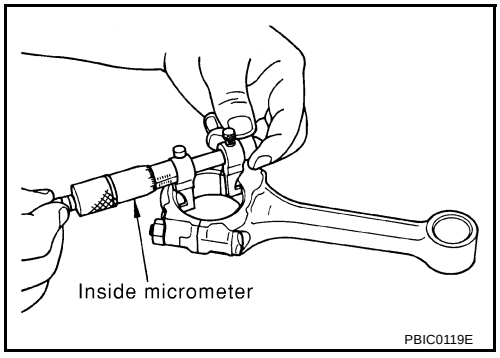

CONNECTING ROD BUSHING OIL CLEARANCE (SMALL END)

Connecting Rod Small End Inner Diameter

Use inside micrometer to measure small end inner diameter.

Standard : 28.026 - 28.038 mm (1.1034 - 1.1039 in)

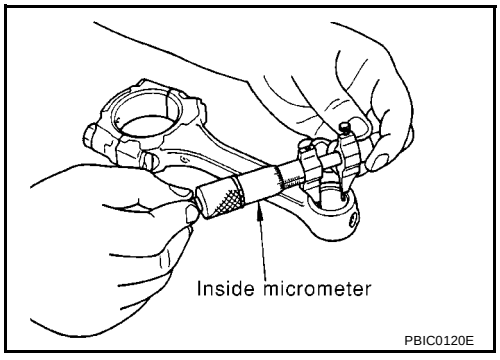

Piston Pin Outer Diameter

Use micrometer to measure piston pin outer diameter.

Standard : 27.995 - 28.000 mm (1.1022 - 1.1024 in)

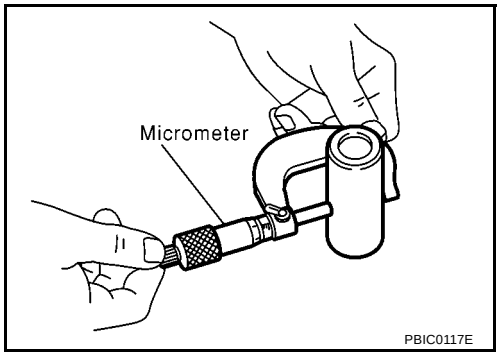

Calculation of Connecting Rod Bushing Clearance

(Connecting rod small end bushing clearance) = (Connecting rod small end inner diameter) – (Piston pin outer diameter)

Standard : 0.026 - 0.044 mm (0.0010 - 0.0017 in)

Limit : 0.057 mm (0.0022 in)

- If out of specifications, replace connecting rod and/or piston and piston pin assembly. Refer to EM-211, "HOW TO SELECT CONNECTING ROD BEARING" .

CYLINDER BLOCK TOP SURFACE DISTORTION

- Using scraper, remove gasket installed onto cylinder block surface. Remove contamination such as oil, scale, and carbon.

  CAUTION:
  Keep broken pieces of gasket clear of oil and coolant passages.
- Use straightedge and feeler gauge to check block upper surface for distortion.

  Limit : 0.04 mm (0.0016 in)

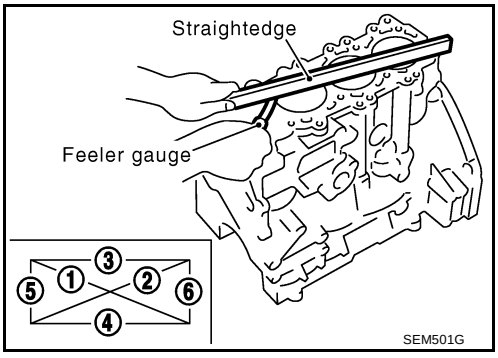

MAIN BEARING HOUSING INNER DIAMETER

- Without installing main bearings, install main bearing caps, and tighten bolts to the specified torque.
- Measure the inner diameter of main bearing housing with a bore gauge.

  Standard : 66.654 - 66.681 mm (2.6242 - 2.6252 in)
- If the measurement is out of the specified range, replace cylinder block and main bearing caps.

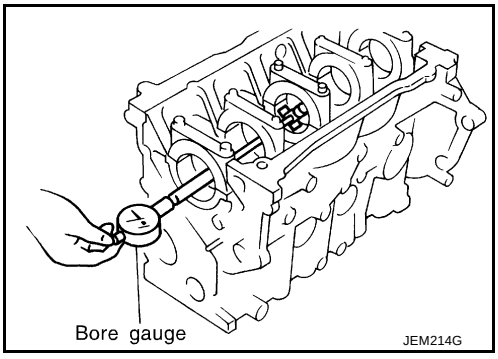

PISTON TO CYLINDER BORE CLEARANCE

Cylinder Bore Inner Diameter

- Using bore gauge, measure cylinder inner diameters at 6 positions; top, middle, and bottom (C - A) in 2 directions (X, Y).

  Cylinder inner diameter:

Standard	**: 86.000 - 86.030 mm (3.3858 - 3.5870 in)**
Wear limit	**: 0.07 mm (0.0028 in)**
Out-of-round limit (X - Y)	**: 0.015 mm (0.0006 in)**
Taper limit (C - A)	**: 0.010 mm (0.0004 in)**

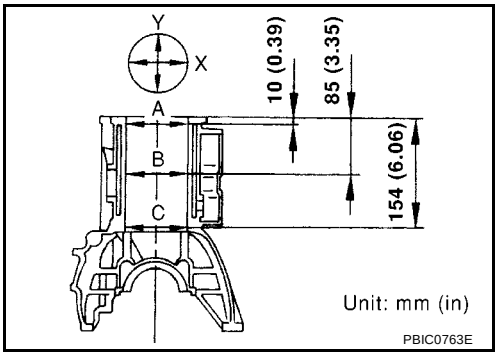

- If clearance exceeds the limit, or any flaws or seizures are found on inner surface of cylinder, horn or bore the applicable cylinder or redore all cylinder.

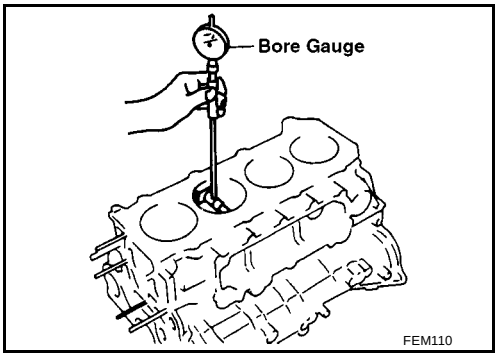

Piston Outer Diameter

Use micrometer to measure piston skirt outer diameter.

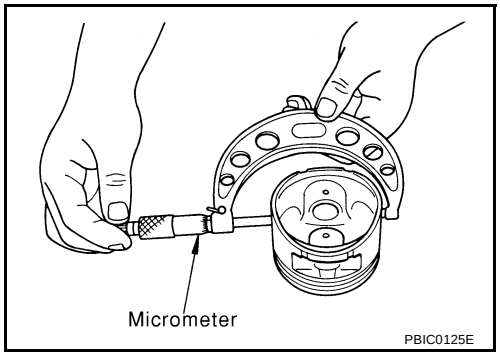

Piston skirt diameter:

Measurement position	**: 11.0 mm (0.43 in)** **Distance from the bottom**
Standard	**: 85.928 - 85.962 mm** **(3.3830 - 3.3843 in)**
0.25 (0.0098) O/S	**: 86.188 - 86.202** **(3.3932 - 3.3938)**
0.50 (0.0197) O/S	**: 86.438 - 86.452** **(3.4031 - 3.4036)**

Calculation of Piston to Piston Bore Clearance

- Calculate using piston skirt outer diameter and cylinder inner diameter (direction X, position B).
  (Clearance) = (Cylinder inner diameter) – (Piston skirt outer diameter)

Specifications at room temperature [20°C (68°F)]:

0.058 - 0.082 mm (0.0023 - 0.0032 in)

- If out of specification, replace piston and piston pin assembly. Refer to EM-210, "HOW TO SELECT PISTON" .

Reboring Cylinder

1. Determine cylinder bore size by adding piston-to-cylinder bore clearance to piston diameter.

Rebore size calculation:

D = A + B – C

Where,

D:Rebored diameter

A: Piston diameter as measured

B: Piston-to-bore clearance

C: Honing allowance 0.02 mm (0.0008 in)

2. Install main bearing caps and tighten bolts to specified torque. This will prevent distortion of cylinder bores.
3. Cut cylinder bore.
   - When any cylinder needs boring, all other cylinders must also be bored.
   - Do not cut too much out of cylinder bore at a time. Cut only 0.05 mm (0.0020 in) or so at a time.
4. Hone cylinders to obtain specified piston-to-bore clearance.
5. Measure finished cylinder bore for out- of-round and taper.
   - Measurement should be done after cylinder bore cools down.

CRANKSHAFT JOURNAL OUTER DIAMETER

Use micrometer to measure journal outer diameter.

Standard : 62.951 - 62.975 mm (2.4784 - 2.4793 in)

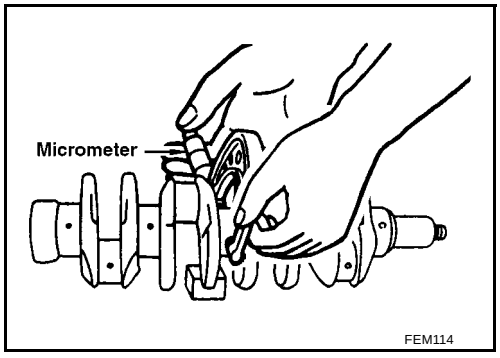

CRANKSHAFT PIN OUTER DIAMETER

Use micrometer to measure pin outer diameter.

Standard : 51.954 - 51.974 mm (2.0454 - 2.0462 in)

CRANKSHAFT OUT-OF-ROUND AND TAPER

- Using micrometer, measure each journal and pin at 4 points shown in the figure.
- Out-of-round value is indicated by difference in dimensions between directions X and Y at points A and B.
- Taper value is indicated by difference in dimensions between points A and B in directions X and Y.

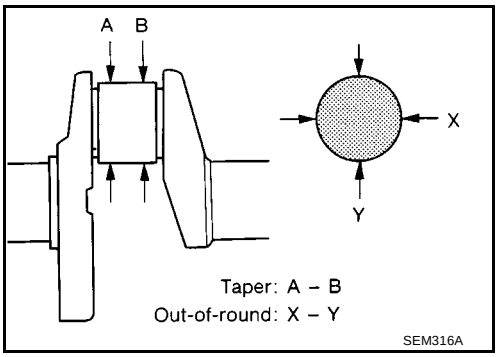

Out-of-round:

Standard : 0.003 mm (0.0001 in)

Limit : 0.005 mm (0.0002 in)

Taper:

Standard : 0.003 mm (0.0001 in)

Limit : 0.005 mm (0.0002 in)

CRANKSHAFT RUNOUT

- Place V-block onto surface plate to support journals at both ends of crankshaft.
- Position dial indicator vertically onto No. 3 journal.
- Rotate crankshaft to read needle movement on dial indicator. (Total indicator reading)

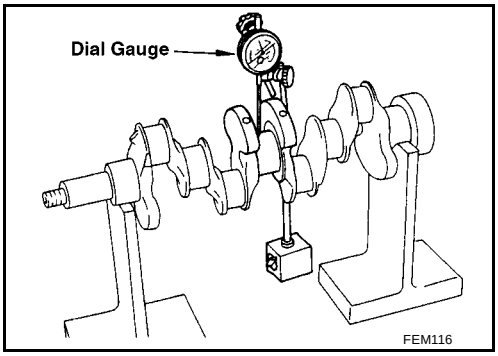

Standard : 0.05 mm (0.0020 in)

Limit : 0.10 mm (0.0039 in)

CONNECTING ROD BEARING OIL CLEARANCE

Method by Measurement

- Install connecting rod bearings to connecting rods and caps, and tighten connecting nuts to the specified torque. Use inside micrometer to measure connecting rod bearing inner diameter.
(Bearing clearance) = (Connecting rod bearing inner diameter) – (Crankshaft pin outer diameter)

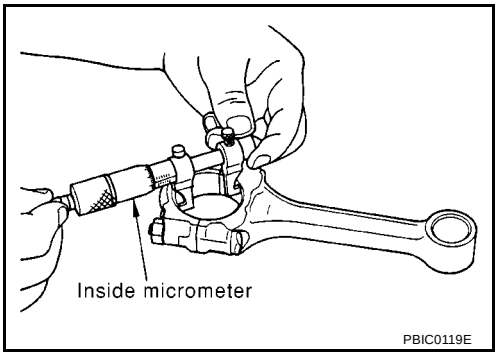

Standard : 0.031 - 0.061 mm (0.0012 - 0.0024 in)

- If out of specifications, check connecting rod big end inner diameter and crankshaft pin outer diameter, and select appropriate connecting rod bearing to adjust clearance to specifications.
Refer to EM-211, "HOW TO SELECT CONNECTING ROD BEARING" .

Method Using Plastigage

- Remove contamination such as oil, dust completely from crankshaft pins and each bearing surface.
- Cut plastigage slightly shorter than bearing width, place it in crankshaft direction, avoiding oil holes.
- Install connecting rod bearings to caps, and tighten connecting rod nuts to the specified torque.

CAUTION:
Never rotate crankshaft.

- Remove connecting rod caps and bearings, and measure plastigage width using scale on plastigage bag.

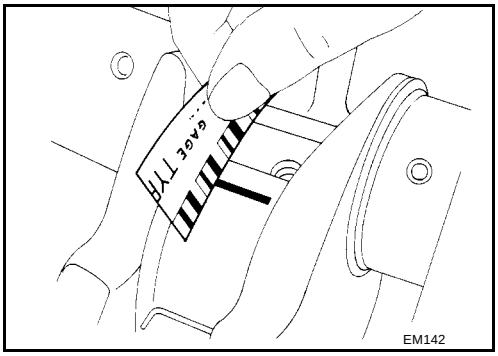

CAUTION:
If out of specification, take same action mentioned in “Method by measurement”.

MAIN BEARING OIL CLEARANCE

Method by Measurement

- Install main bearings to the cylinder block and bearing cap, and tighten the bolts to the specified torque. Then, measure the inner diameter of the main bearings.
  (Bearing clearance) = (Bearing inner diameter) – (Crankshaft journal outer diameter)

  Standard : 0.039 - 0.066 mm (0.0015 - 0.0026 in)

- If out of specification, check main bearing housing inner diameter and crankshaft journal outer diameter, and select appropriate main bearing to adjust clearance to specifications. Refer to EM-212, "HOW TO SELECT MAIN BEARING" .

Method Using Plastigage

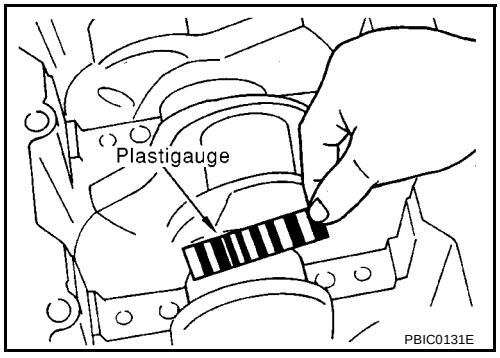

- Remove contamination such as oil and dust completely from crankshaft journals and each bearing surface.
- Cut plastigage slightly shorter than bearing width. place it in crankshaft turning direction, avoiding oil holes.
- Install main bearings and bearing cap and tighten to the specified torque.

  CAUTION:
  Never rotate crankshaft.

- Remove main bearings and bearings, and measure plastigage width using scale on plastigage bag.

  CAUTION:
  If out of specification, take same action mentioned in “Method by measurement”.

- Install main bearings to the cylinder block and bearing cap, and tighten the bolts to the specified torque. Then, measure the inner diameter of the main bearings.

MAIN BEARING CRUSH HEIGHT

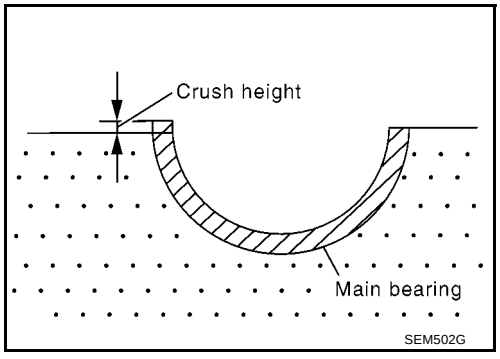

- When the bearing cap is removed after being tightened to the specified torque with main bearings installed, the tip end of bearing must protrude.

  Standard : Crush height must exist.

- If out of specification, replace main bearings.

MAIN BEARING CAP BOLT DEFORMATION

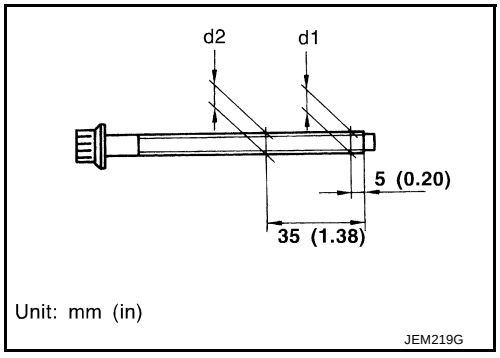

- Measure the outer diameter of threaded area, d1 and d2, at the points specified in the figure.
- When the necked point is identified at a point other than where specified, measure at the point as d2.
- Calculate the difference between d1 and d2.

  Limit : 0.13 mm (0.0051 in)

CONNECTING ROD BOLT DEFORMATION

- Install nuts to connecting rod bolts. Check that the nut can be screwed smoothly on bolt threads by hand to the last thread on the bolt.
- If the nut does not screw in smoothly, measure the outer diameter of the bolt thread at the point specified in the figure.
- If a necked point is identified, measure at that point.

Standard : 8.90 - 9.00 mm (0.3504 - 0.3543 in) dia.
Limit : 8.75 mm (0. 3445 in) dia.

- If the measurement exceeds the limit, replace connecting rod bolts and nuts.

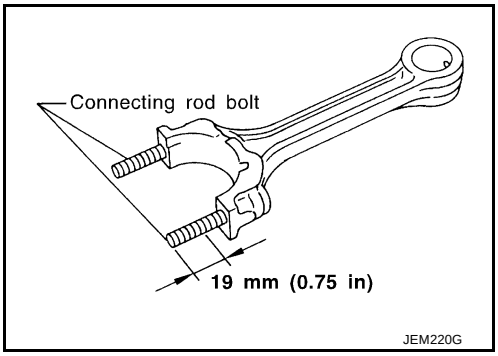

OIL JET

- Check nozzle for deformation and damage.
- Blow compressed air from nozzle, and check for clogs.

Standard : Deformation and damage.

- If it out of the standard, replace oil jet.

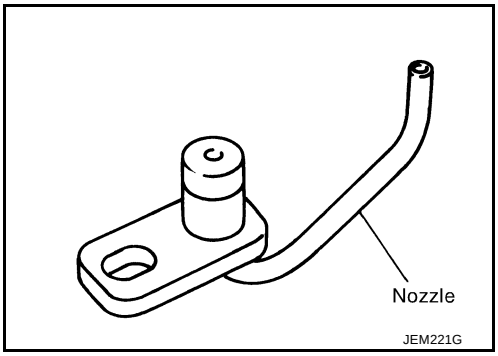

OIL JET RELIEF VALVE

- Using a clean plastic stick, press check valve in oil jet relief valve. Make sure that valve moves smoothly with proper reaction force.

Standard
: Valve moves smoothly with proper reaction force.

- If it is out of the standard, replace oil jet relief valve.

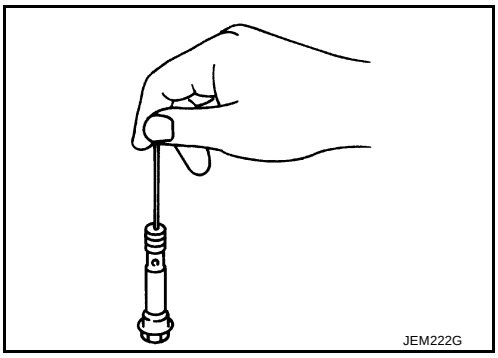

MOVEMENT AMOUNT OF FLYWHEEL

NOTE:
- Inspection for double mass flywheel only.
- Do not disassembly double mass flywheel.

Flywheel Runout

- Measure deflection of flywheel contact surface to the clutch with a dial gauge. Measure deflection at 210 mm (8.27 in) dia.

YD22DDT engine
Limit : 0.15mm (0.0059in)
YD22DDTi engine
Standard : 0.45mm (0.0177 in) or less
Limit : 1.3mm (0.051 in)

- When measured value exceeds the limit, replace flywheel with a new one.

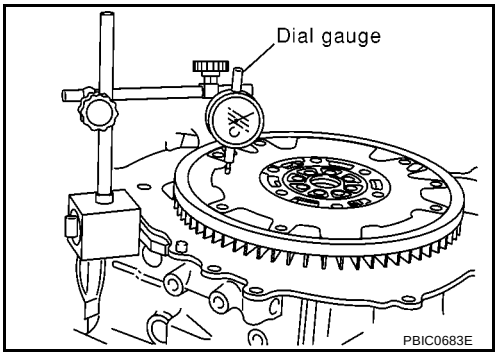

Movement Amount in Rotation Direction

- Check the movement amount in the following procedure.

1. Install a bolt to clutch cover mounting hole, and place a torque wrench on the extended line of the flywheel center line.

- Tighten bolt at a force of 9.8 N·m (1kg-m, 87 in-lb) to keep it from loosening.

2. Put a mating mark on circumferences of the two flywheel masses without applying any load (Measurement standard points).
3. Apply a force of 9.8 N·m (1kg-m, 87 in-lb) in each direction, and mark the movement amount on the mass on the transmission side.
4. Measure dimensions of movement amounts A and B on circumference of the flywheel on the transmission side.

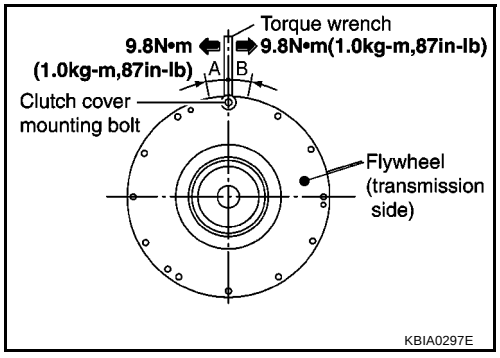

Standard : 26.2 mm (1.031 in) or less

- When measured value is outside the standard, replace flywheel.

SERVICE DATA AND SPECIFICATIONS (SDS)

PFP:00030

Standard and Limit

EBS00QG0

GENERAL SPECIFICATIONS

Cylinder arrangement		In-line 4
Displacement	Unit: cm^3 (cu in)	2,184 (133.27)
Bore and stroke	Unit: mm (in)	86 x 94 (3.39 x 3.70)
Valve arrangement		DOHC
Firing order		1-3-4-2
Number of piston rings	Compression	2
	Oil	1
Number of main bearings		5
Compression ratio		16.7
Compression pressure Unit: kPa (bar, kg/cm^2 , psi)/200 rpm	Standard	2,991 (29.9, 30.5, 2,434)
	Minimum	2,452 (24.5, 25.0, 356)
	Differential limit between cylinders	490 (4.9, 5.0, 71)
Valve timing	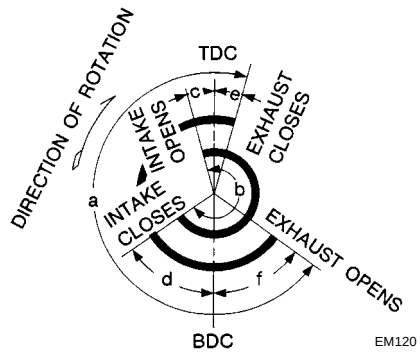	

Unit: degree

a	b	c	d	e	f
224	212	2	30	-2	46

INTAKE MANIFOLD AND EXHAUST MANIFOLD

Unit: mm (in)

Item		Limit
Surface distortion	Intake manifold	0.1 (0.004)
	Exhaust manifold	0.3 (0.012)

DRIVE BELTS

Belt Deflection:

Unit: mm (in)

Applied belt	Belt deflection with 98 N (10 kg, 22 lb) force applied*		
	New	Adjusted	Limit for re-adjusting
Air conditioner compressor belt	4 - 5 (0.16 - 0.20)	6 - 7 (0.24 - 0.28)	8.5 (0.335)
Alternator & water pump belt	9.0 - 10.5 (0.354 - 0.413)	11.0 - 12.5 (0.433 - 0.492)	16.5 (0.650)

*: When engine is cold.

CYLINDER HEAD

Unit: mm (in)

Item	Standard	Limit
Head surface distortion	Less than 0.03 (0.0012)	0.04 (0.0016)

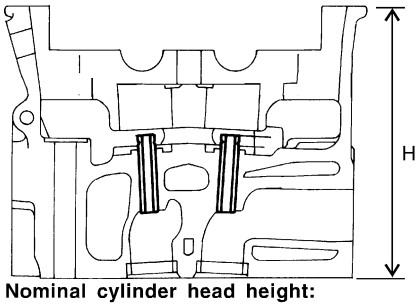

Nominal cylinder head height:
H = 153.9 - 154.1 mm (6.059 - 6.067 in)

JEM204G

VALVE

Valve

Unit: mm (in)

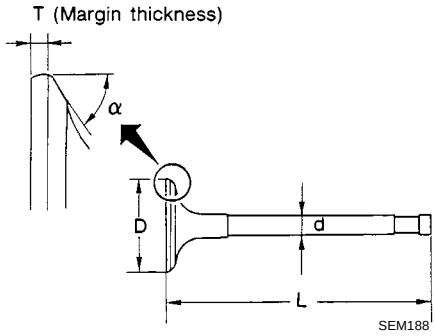

SEM188

Valve head diameter “D”	Intake	28.0 - 28.3 (1.102 - 1.114)
	Exhaust	26.0 - 26.3 (1.024 - 1.035)
Valve length “L”	Intake	106.72 (4.2016)
	Exhaust	106.36 (4.1874)
Valve stem diameter “d”	Intake	5.965 - 5.980 (0.2348 - 0.2354)
	Exhaust	5.945 - 5.960 (0.2341 - 0.2346)
Valve seat angle “α”	Intake	45°15′ - 45°45′
	Exhaust	
Valve margin “T”	Intake	1.38 (0.0543)
	Exhaust	1.48 (0.0583)
Valve margin “T” limit		More than 1.0 (0.039)
Valve stem end surface grinding limit		Less than 0.2 (0.008)

Valve Clearance

Unit: mm (in)

Item	Cold*1	Hot*2 (reference data)
Intake	0.24 - 0.32 (0.0094 - 0.0126)	0.274 - 0.386 (0.011 - 0.015)
Exhaust	0.26 - 0.34 (0.0102 - 0.0134)	0.308 - 0.432 (0.012 - 0.017)

*1: Approximately 20°C (68°F)
*2: Approximately 80°C (176°F)

Available Shims

Stamped mark	Thickness mm (in)
2.10	2.10 (0.0827)
2.12	2.12 (0.0835)
2.14	2.14 (0.0843)
2.16	2.16 (0.0850)
2.18	2.18 (0.0858)
2.20	2.20 (0.0866)
2.22	2.22 (0.0874)
2.24	2.24 (0.0882)
2.26	2.26 (0.0890)
2.28	2.28 (0.0898)
2.30	2.30 (0.0906)
2.32	2.32 (0.0913)
2.34	2.34 (0.0921)
2.36	2.36 (0.0929)
2.38	2.38 (0.0937)
2.40	2.40 (0.0954)
2.42	2.42 (0.0953)
2.44	2.44 (0.0961)
2.46	2.46 (0.0969)
2.48	2.48 (0.0976)
2.50	2.50 (0.0984)
2.52	2.52 (0.0992)
2.54	2.54 (0.1000)
2.56	2.56 (0.1008)
2.58	2.58 (0.1016)
2.60	2.60 (0.1024)
2.62	2.62 (0.1031)
2.64	2.64 (0.1039)
2.66	2.66 (0.1047)
2.68	2.68 (0.1055)
2.70	2.70 (0.1063)
2.72	2.72 (0.1071)
2.74	2.74 (0.1079)

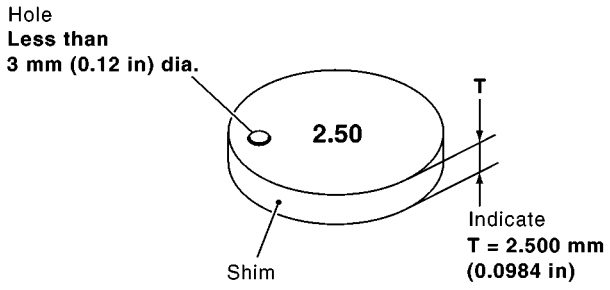

SEM512G

Valve Spring

Free height	mm (in)	44.74 (1.7614)
Pressure	N (kg, lb) at height mm (in)	184 - 208 (18.77 - 21.22, 41.4 - 46.8) at 32.82 (1.2921)
Out-of-square	mm (in)	Limit 1.5 (0.059)
Height during valve open	mm (in)	24.82 (0.9772)
Load with valve open	N (kg, lb)	320 - 360 (32.65 - 36.73, 71.9 - 80.9)

Valve Lifter

Unit: mm (in)

Item	Standard
Valve lifter outer diameter	29.960 - 29.975 (1.1795 - 1.1801)
Lifter guide inner diameter	30.000 - 30.021 (1.1811 - 1.1819)
Clearance between lifter and lifter guide	0.025 - 0.061 (0.0010 - 0.0024)

Valve Guide

Unit: mm (in)

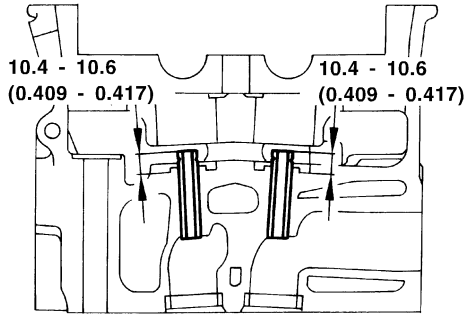

Unit: mm (in) JEM156G

Item		Standard	Service
Valve guide	Outer diameter	10.023 - 10.034 (0.3946 - 0.3950)	10.223 - 10.234 (0.4025 - 0.4029)
Valve guide	Inner diameter (Finished size)	6.000 - 6.018 (0.2362 - 0.2369)	
Cylinder head valve guide hole diameter		9.975 - 9.996 (0.3927 - 0.3935)	10.175 - 10.196 (0.4006 - 0.4014)
Interference fit of valve guide		0.027 - 0.059 (0.0011 - 0.0023)	
Item		Standard	Limit
Stem to guide clearance	Intake	0.020 - 0.053 (0.0008 - 0.0021)	0.08 (0.0031)
	Exhaust	0.040 - 0.073 (0.0016 - 0.0029)	0.1 (0.004)
Valve deflection limit		0.15 (0.0059)	
Projection length		10.4 - 10.6 (0.409 - 0.417)	

Valve Seat

Unit: mm (in)

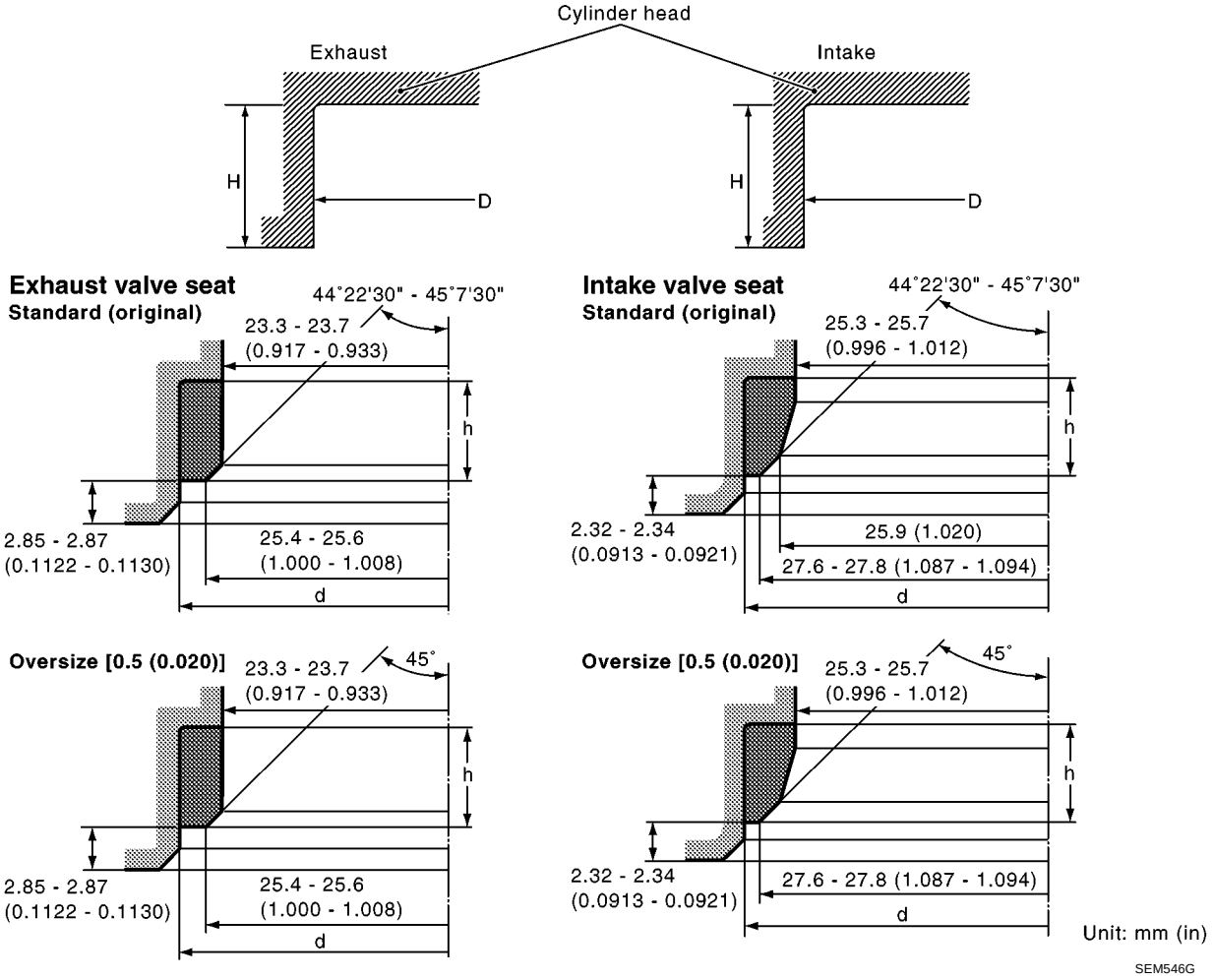

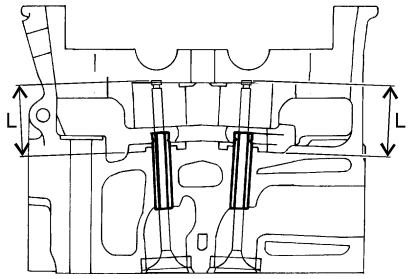

Item		Standard	Service
Cylinder head seat recess diameter (D)	Intake	30.000 - 30.016 (1.1181 - 1.1817)	30.500 - 30.516 (1.2008 - 1.2014)
	Exhaust	29.000 - 29.016 (1.1417 - 1.1424)	29.500 - 29.516 (1.1614 - 1.1620)
Valve seat interference fit	Intake	0.064 - 0.100 (0.0025 - 0.0039)	
	Exhaust	0.064 - 0.096 (0.0025 - 0.0038)	
Valve seat outer diameter (d)	Intake	30.000 - 30.016 (1.1811 - 1.1817)	30.500 - 30.516 (1.2008 - 1.2014)
	Exhaust	29.000 - 29.016 (1.1442 - 1.1424)	29.500 - 29.516 (1.1614 - 1.1620)
Height (h)	Intake	7.0 - 7.1 (0.276 - 0.280)	6.60 - 6.70 (0.2598 - 0.2638)
	Exhaust	6.7 - 6.8 (0.264 - 0.268)	6.3 - 6.4 (0.248 - 0.252)

Depth (H)	Intake	8.83 - 9.13 (0.3476 - 0.3594)
	Exhaust	9.06 - 9.36 (0.3567 - 0.3685)
Projection (L)	Intake	36.53 - 36.98 (1.4382 - 1.4559)
	Exhaust	36.53 - 37.01 (1.4382 - 1.4571)

CAMSHAFT AND CAMSHAFT BEARING

Unit: mm (in)

Item		Standard	Limit
Camshaft oil clearance		0.045 - 0.086 (0.0018 - 0.0034)	
Camshaft bracket inner diameter	No.1	30.500 - 30.521 (1.2008 - 1.2016)	—
	No. 2, 3, 4, 5	24.000 - 24.021 (0.9449 - 0.9457)	
Camshaft journal outer diameter	No. 1	30.435 - 30.455 (1.1982 - 1.1990)	
	No. 2, 3, 4, 5	23.935 - 23.955 (0.9423 - 0.9431)	
Camshaft runout [TIR*]		—	0.02 (0.0008)
Camshaft sprocket runout [TIR*]		Less than 0.15 (0.0059)	—
Camshaft end play		0.070 - 0.148 (0.0028 - 0.0058)	0.24 (0.0094)

*: Total indicator reading

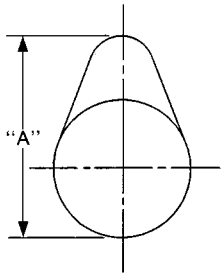

SEM671

Cam height "A"	Intake	39.505 - 39.695 (1.5553 - 1.5628)
	Exhaust	39.905 - 40.095 (1.5711 - 1.5785)
Wear limit of cam height		0.15 (0.0059)

CYLINDER BLOCK

Unit: mm (in)

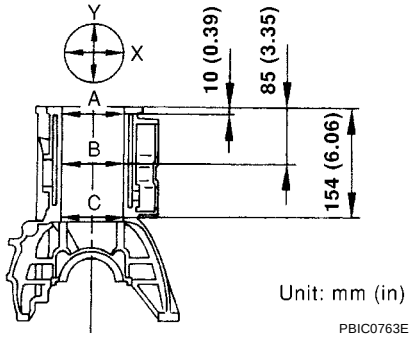

PBIC0763E

Surface flatness	Standard			Less than 0.03 (0.0012)
	Limit			0.04 (0.0016)
Cylinder bore	Inner diameter	Standard	Grade No. 1	86.000 - 86.010 (3.3858 - 3.3862)
			Grade No. 2	86.010 - 86.020 (3.3862 - 3.3866)
			Grade No. 3	86.020 - 86.030 (3.3866 - 3.3870)
		Wear limit		0.07 (0.0028)

Out-of-round (X – Y)		Less than 0.015 (0.0006)
Taper (C - A)		Less than 0.010 (0.0004)
Main journal inner diameter (Without bearing)		66.654 - 66.681 (2.6242 - 2.6252)
Difference in inner diameter between cylinders	Limit	Less than 0.05 (0.0020)

PISTON, PISTON RING AND PISTON PIN

Available Piston

Unit: mm (in)

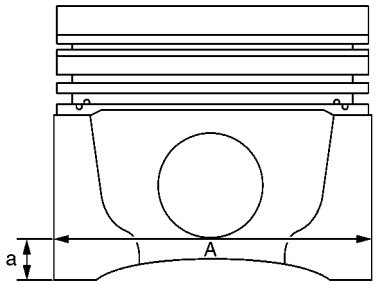

MBIA0026E

Piston skirt diameter “A”	Standard	Grade No. 1	85.928 - 85.942 (3.3830 - 3.3835)
		Grade No. 2	85.938 - 85.952 (3.3834 - 3.3839)
		Grade No. 3	85.948 - 85.962 (3.3838 - 3.3843)
		0.25 (0.0098) O/S (Service)	86.188 - 86.202 (3.3932 - 3.3938)
		0.50 (0.0197) O/S (Service)	86.438 - 86.452 (3.4031 - 3.4036)
“a” dimension			11.0 (0.43)
Piston pin bore diameter			28.003 - 28.009 (1.1025 - 1.1027)
Piston clearance to cylinder block			0.058 - 0.082 (0.0023 - 0.0032)

Piston Ring

Unit: mm (in)

Item		Standard	Limit
Side clearance	Top	0.050 - 0.090 (0.0020 - 0.0035)	0.2 (0.008)
	2nd	0.050 - 0.090 (0.0020 - 0.0035)	0.1 (0.004)
	Oil ring	0.030 - 0.070 (0.0012 - 0.0028)	—
End gap	Top	0.20 - 0.30 (0.0079 - 0.0118)	1.0 (0.039)
	2nd	0.31 - 0.51 (0.0122 - 0.0201)	1.0 (0.039)
	Oil (rail ring)	0.30 - 0.55 (0.0118 - 0.0217)	1.0 (0.039)

Piston Pin

Unit: mm (in)

Piston pin outer diameter		27.995 - 28.000 (1.1022 - 1.1024)
Interference fit of piston pin to piston		0.003 - 0.014 (0.0001 - 0.0006)
Piston pin to connecting rod bushing clearance	Standard	0.026 - 0.044 (0.0010 - 0.0017)
	Limit	0.057 (0.0022)

*: Values measured at ambient temperature of 20°C (68°F)

CONNECTNG ROD

Unit: mm (in)

Center distance		157.5 (6.201)
Bend [per 100 (3.94)]	Limit	0.12 (0.0047)
Torsion [per 100 (3.94)]	Limit	0.12 (0.0047)
Connecting rod small end inner diameter		30.080 - 31.000 (1.1842 - 1.2205)
Piston pin bushing inner diameter*		28.026 - 28.038 (1.1034 - 1.1039)
Connecting rod big end inner diameter*		55.000 - 55.013 (2.1654 - 2.1659)
Side clearance	Standard	0.200 - 0.350 (0.0079 - 0.0138)
	Limit	0.4 (0.0157)

*: After installing in connecting rod

CRANKSHAFT

Unit: mm (in)

Main journal dia. “Dm”		62.951 - 62.975 (2.4784 - 2.4793)
Pin journal dia. “Dp”		51.954 - 51.974 (2.0454 - 2.0462)
Center distance “r”		46.97 - 47.03 (1.8492 - 1.8516)
Out-of-round (X – Y)	Standard	Less than 0.003 (0.0001)
	Limit	0.005 (0.0002)
Taper (A – B)	Standard	Less than 0.003 (0.0001)
	Limit	0.005 (0.0002)
Runout [TIR*]	Standard	0.05 (0.002.)
	Limit	0.10 (0.0039)
Side clearance	Standard	0.10 - 0.25 (0.0039 - 0.0098)
	Limit	0.30 (0.0118)

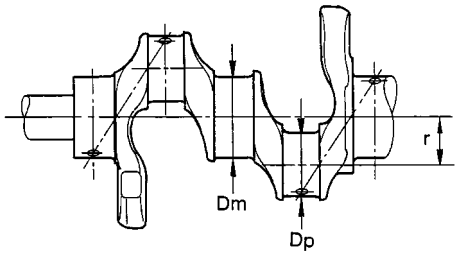

SEM645

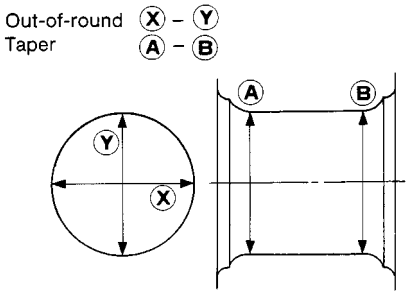

SEM715

*: Total indicator reading

AVAILABLE MAIN BEARING

Main bearing

Unit: mm (in)

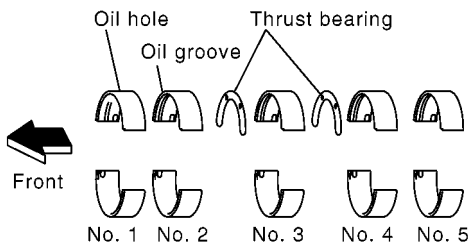

SEM255G

Grade number	Thickness “T”	Width “W”	Identification color
0	1.816 - 1.820 (0.0715 - 0.0717)	19.9 - 20.1 (0.783 - 0.791)	Black
1	1.820 - 1.824 (0.0717 - 0.0718)		Red
2	1.824 - 1.828 (0.0718 - 0.0720)		Green
3	1.828 - 1.832 (0.0720 - 0.0721)		Yellow
4	1.832 - 1.836 (0.0721 - 0.0723)		Blue

Under size

Unit: mm (in)

Size	Thickness	Main journal diameter “Dm”
0.25 (0.0098)	1.949 - 1.953 (0.0767 - 0.0769)	Grind so that bearing clearance is the specified value.

AVAILABLE CONNECTING ROD BEARING

Connecting Rod Bearing

Unit: mm (in)

Grade number	Thickness “T”	Width “W”	Identification color (mark)
0	1.492 - 1.496 (0.0587 - 0.0589)	22.9 - 23.1 (0.902 - 0.909)	Black
1	1.496 - 1.500 (0.0589 - 0.0591)		Brown
2	1.500 - 1.504 (0.0591 - 0.0592)		Green

Under size

Unit: mm (in)

Size	Thickness	Crank pin journal diameter “Dp”
0.08 (0.0031)	1.536 - 1.540 (0.0605 - 0.0606)	Grind so that bearing clearance is the specified value.
0.12 (0.0047)	1.556 - 1.560 (0.0613 - 0.0614)	
0.25 (0.0098)	1.621 - 1.625 (0.0638 - 0.0640)	

MISCELLANEOUS COMPONENTS

Flywheel

Unit: mm (in)

		YD22DDT engine	YD22DDTi engine
Flywheel runout [TIR]*	Standard	—	0.45 (0.0177) or less
	Limit	0.15 (0.0059)	1.3 (0.051)

*: Total indicator reading

Bearing Clearance

Unit: mm (in)

Main bearing clearance	Standard	0.039 - 0.066 (0.0015 - 0.0026)
	Limit	0.10 (0.0039)
Connecting rod bearing clearance	Standard	0.031 - 0.061 (0.0012 - 0.0024)
	Limit	0.09 (0.0035)

Tightening Torque

EBS00QG1

*1: Parts to be tightened in particular orders.
1)-: Order of tightening when tightening two or more times separately.

Unit: N·m (kg-m, ft-lb)
Unit: N·m (kg-m, in-lb)*2

	Alternator	Nut C		19 - 24 (1.9 - 2.5, 14 - 18)
		Nut D		44 - 57 (4.4 - 5.9, 32 - 42)
	Idler pulley	Nut A		31 - 39 (3.1 - 4.0, 23 - 28)
	Catalyst			44 - 53 (4.4 - 5.5, 32 - 39)
	Catalyst rear diffuser			30 - 37 (3.0 - 3.8, 22 - 27)
	Catalyst insulator			6.4 - 8.3 (0.65 - 0.85, 57 - 73)*2
	Turbocharger			44.0 - 53.0 (4.4 - 5.5, 32 - 39)
	Charge air cooler			19.6 - 23.5 (2.0 - 2.3,15 - 13)
	Air inlet tube			19.6 - 23.5 (2.0 - 2.3,15 - 17)
	EGR volume control valve			62.0 - 78.0 (6.3 - 8.0, 46 - 57)
	EGR tube			60.0 - 69.0 (6.1 - 7.1, 45 - 51)
	EGR support			21.0 - 26.0 (2.1 - 2.7, 16 - 19)
	Exhaust manifold insulator			5.1 - 6.4 (0.52 - 0.66, 46 - 57)*2
*1	Exhaust manifold			29.0 - 33.0 (2.9 - 3.4, 21 - 24)
	Engine cover			5.0 - 6.47 (0.51 - 0.66, 45 - 56)
*1	Rocker cover		1)	6.8 - 8.8 (0.7 - 0.9, 61 - 75)*2
			2)	6.8 - 8.8 (0.7 - 0.9, 61 - 75)*2
	Oil pan lower			8.43 - 10.8 (0.86 - 1.1, 75 - 95) *2
	Oil pan drain plug			29 - 39 (3.0 - 4.0, 22 - 28)
	Oil strainer			16 - 18 (1.7 - 1.8, 12 - 13)
*1	Oil pan upper	M6 bolt		8.43 - 10.8 (0.86 - 1.1, 75 - 95)*2
		M8 bolt		20 - 23 (2.1 - 2.3, 15 - 16)
		M10 bolt		41.2 - 52 (4.2 - 5.3, 30 - 38)
	Vacuum pump			20.6 - 26.5 (2.1 - 2.7, 15 - 20)
	Cylinder head rear cover	M6 bolt		8.6 - 10.8 (0.87 - 1.1, 76 - 95) *2
		M8 bolt		15.8 - 18.6 (1.6 - 1.9, 12 - 14)
	Injection tube	Nozzle side		21.6 - 24.5 (2.2 - 2.5, 16 - 18)
		Pump side		21.6 - 24.5 (2.2 - 2.5, 16 - 18)
	Nozzle support			24.7 - 27.8 (2.6 - 2.8, 19 - 20)
	Spill tube	Nozzle side		16.8 - 20.6 (1.7 - 2.1, 12 - 15)
		Cylinder head side		16.8 - 20.6 (1.7 - 2.1, 12 - 15)
	Fuel rail			51.0 - 64.0 (5.2 - 6.5, 38 - 47)
	Fuel pump			16.8 - 25.2 (1.7 - 2.6, 12 - 18)
	Fuel pump sprocket			37.0 - 41.0 (3.8 - 4.2, 28 - 30)

	Front chain case		6.9 - 8.8 (0.7 - 0.9, 61 - 78)*2
	Chain tensioner		8.5 - 10.7 (0.86 - 1.1, 75 - 95)*2
	Tensioner guide		21.0 - 26.0 (2.1 - 2.7, 16 - 19)
	Slack guide (Primary timing chain)		23 - 26 (2.3 - 2.7, 17 - 19)
	Slack guide (Secondary timing chain)		21-26 (2.1-2.7, 16-19)
	Camshaft sprocket		138 - 147(14.0 - 15.0, 102 - 108)
	Fuel pump sprocket		37.0 - 41.0 (3.8 - 4.2, 28 - 30)
*1	Oil pump housing		11.7 - 13.7 (1.2 - 1.4, 9 - 10)
	Power steering pump		51.0 - 56.0 (5.2 - 5.8, 38 - 41)
*1	Rear chain case		12.0 - 13.0 (1.2 - 1.4, 19 - 10)
	Engine coolant temperature sensor		12.0 - 15.0 (1.2 - 1.6, 9- 11)
*1	Cylinder head	1)	35 - 44 (3.5 - 4.5, 26 - 32)
		2)	180° to 185°
		3)	0 (0, 0)
		4)	35 - 44 (3.5 - 4.5, 26 - 32)
		5)	90° to 95°(angle tightening)
		6)	90° to 95°(angle tightening)
	Water outlet		21 - 28 (2.1 - 2.9, 16 - 20)
	Glow plug		18.0 - 21.0 (1.8 - 2.2, 13 - 15)
*1	Flywheel		103 - 112 (10.5 - 115, 76 - 83)
	Oil pressure switch		13.0 - 17.0 (1.25 - 1.75, 9 - 12)
	Oil jet		6.0 - 10.8(0.62 - 1.1, 54 - 95)
	Oil jet relief valve		40 - 58 (4.0 - 6.0, 29 - 43)
	Rear oil seal retainer		12.0 - 13.0 (1.2 - 1.4, 9 - 10)