长安汽车
CHANGAN

CS35 Workshop Manual

Electronic Control System - ME7

&

Engine Immobilizer System

CS35RM2H/2/1

mashinesoft.com
09120146259

mashinesoft.com
09120146259

GROUP

3

Powertrain

3.1 Engine - 1.6L

3.1.12 Engine Immobilizer System 3.1.12-1

3.1.13 Electronic Control System 3.1.13-1

mashinesoft.com
09120146259

mashinesoft.com
09120146259

Specifications

Torque Specifications

Name	Nm	lb-ft	lb-in
ECM retaining bolt	10	-	89
BCM retaining bolt	11	8	-

mashinesoft.com
09120146259

Description and Operation

System Overview

On the vehicles with engine immobilizer controller , if you want to start the engine, the starter key (password transponder) shall pass through the ELF magnetic fields and the body control module validation. If the body control module validation of the starter key (password transponder) fails, the engine control module obtains the vehicle fortification not releasing information from the body control module by K-Line network, turn the ignition key to the "ST" position, and the engine can not be started.

Engine immobilizer system consists of the following main components:

1. Password transponder (remote key)
2. Immobilizer controller (IMMO)
3. Body control module (BCM)
4. Engine control module (ECM)

When the ignition switch is at "ON" position, the password transponder of the key passes through the ELF magnetic fields and the body control module for validation. After the successful validation, the body control module communicates with the engine control module via K-Line network, allowing the engine control module to start the engine.

machinesoft.com
09420146259

System Principle

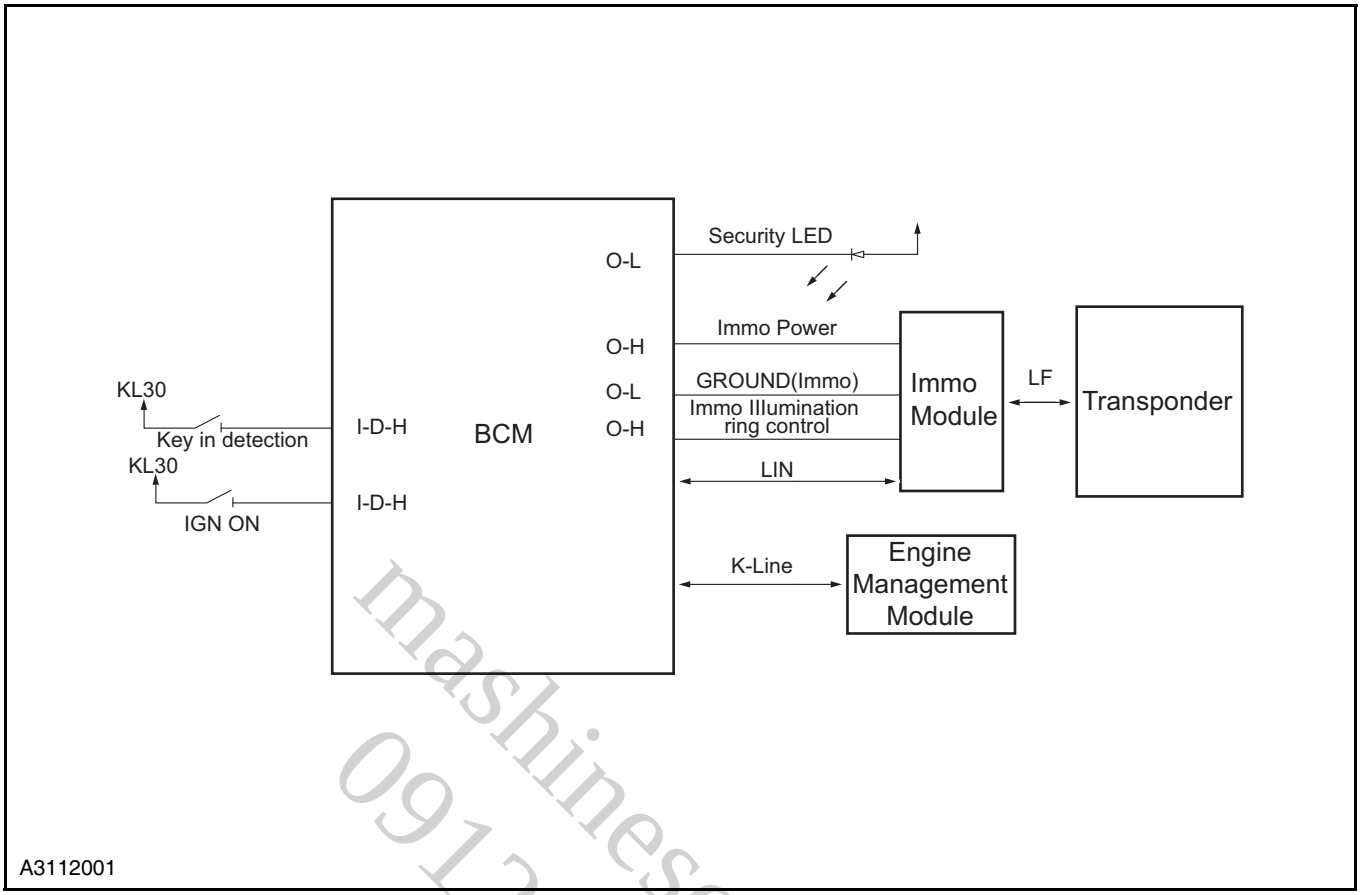

mashinesoft.com
09120146259

General Procedures

General Equipment

Digital multimeter
Changan Auto special diagnostic tester

1. Inspect the after-sales rectified devices, which may affect the engine immobilizer system.
2. Inspect the easy-to-access or visible system components, in order to identify whether there is significant damage or other problems that may cause failure.
3. If the system displays the engine is locked, inspect to see whether the ignition key is learned or perform the learning process of the ignition key.

mashinesoft.com
09120146259

Symptom Diagnosis and Testing

General Equipment

Digital multimeter
Changan Auto Special Diagnostic Tester

Inspection and Verification

1. Verify the customer concern.
2. Visually inspect for obvious signs of mechanical damage or electric damage.
3. If an obvious cause for an observed or reported concern is found, correct the cause before proceeding to the next step.
4. If no obvious problem been found, confirm the failure and refer to the Symptom Chart.

Visual Inspection Chart

Mechanical	Electric
• Starter key (password transponder)	• Circuit • Immobilizer controller • ECM circuit • BCM circuit • IPC circuit

machinesoft.com 0912014259

Symptom Chart

If there is symptom but no diagnosis trouble code (DTC) is stored in control module and can not confirm symptom reasons in basic inspect, it is necessary to diagnosis and eliminate the symptoms in the following chart.

Symptom	Possible Sources	Action
The key cannot match	• Key assembly • Immobilizer controller • BCM	• Inspect and replace the key assembly. • Match the remote key. • Inspect the circuit. • Inspect and replace the BCM.
ECM always detect that the immobilizer is enabled	• Wiring harness • Key assembly • Immobilizer controller • ECM • BCM	**Refer to: ECM Always Detect That Immobilizer Is Enabled Fault Diagnosis (3.1.12 Engine Immobilizer System, Symptom Diagnosis and Testing).**

mashinesoft.com
09120146259

ECM Always Detect That Immobilizer Function Activated Diagnosis

Test conditions	Details/Results/Actions
1. Re-match the remote controller	
CAUTION: If BCM does not match the keys on line or manually before, the original password is 0000.	A.Turn the ignition switch to "ON" position. B.Connect the diagnostic tool wiring harness to the vehicle interface. C.Select : "Changan Auto" / "CS35" / "Delphi BCM" / "Safe operation" / "Enter password" / "Enter safe operation" / "Anti-theft key matching" / "Start matching"on the diagnostic tool. D.Starting the engine. Does the engine start normally? **Y** Verify the system is normal. **N** Go to step 2.
2. Inspect the power supply circuit of the immobilizer controller	
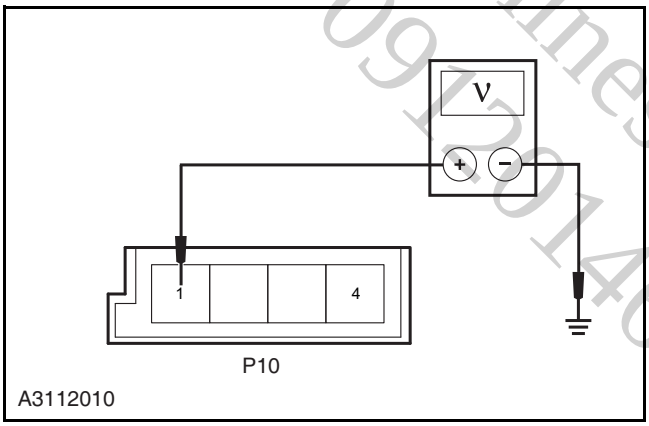	A.Turn the ignition switch to position "LOCK". B. Disconnect the immobilizer controller wiring harness connector P10. C.Turn the ignition switch to position "ON". D.Measure the voltage between terminal 1 of immobilizer controller wiring harness connector P10 and reliable ground with the multimeter. **Standard Voltage Value: 11 ~ 14 V** Is the voltage normal？ **Y** Go to step 3. **N** Inspect and repair the power supply circuit of the immobilizer controller.

mashinesoft.com 09120146258

Test conditions	Details/Results/Actions
3. Inspect the Lin network circuit of the immobilizer controller	
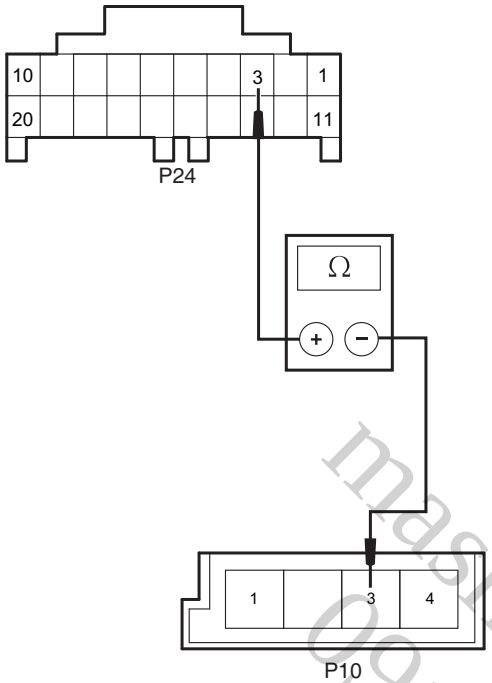 A3112011	A.Turn the ignition switch to position "LOCK". B.Disconnect the battery negative cable. C.Disconnect the wiring harness connector P24 of the body control module and the wiring harness connector P10 of the immobilizer controller. D.Measure the resistance value between the terminal 3 of the BCM wiring harness connector P24 and the terminal 3 of the immobilizer controller wiring harness connector P10 with a multimeter. **Standard Resistance Value: less than 5 Ω** Is the resistance value normal? **Y** Go to step 4. **N** Inspect and repair the open circuit between the terminal 3 of the BCM wiring harness connector P24 and the terminal 3 of the immobilizer controller wiring harness connector P10.
4.Inspect the immobilizer controller ground circuit	
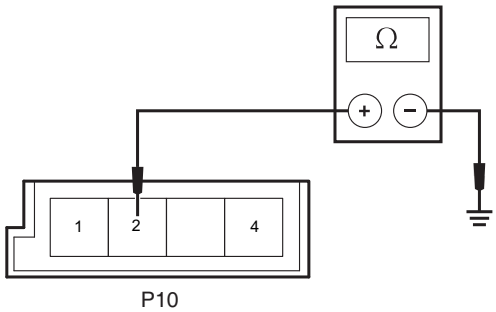 A3112012	A.Turn the ignition switch to position "LOCK". B.Disconnect the body control module wiring harness connector P10. C.Measure the resistance between terminal 2 of immobilizer controller wiring harness connector P10 and reliable ground with the multimeter. **Standard Resistance Value: less than 5 Ω** Is the resistance value normal? **Y** Go to step 5. **N** Inspect and repair the ground circuit of the immobilizer controller.

machinesoft.com 09120142259

Test conditions	Details/Results/Actions
5. Inspect the K-line network cable between ECM and BCM	
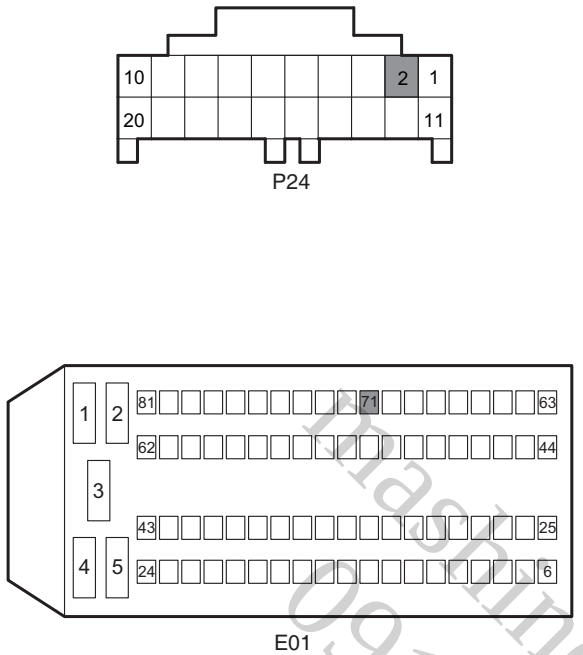 A3112014	A.Turn the ignition switch to position "LOCK". B.Disconnect the battery negative cable. C.Disconnect the wiring harness connector P24 of the body control module and the ECM wiring harness connector E01. D.Measure with multimeter the resistance between the terminal 2 of BCM wiring harness connector P24 and the terminal 71 of the ECM wiring harness connector E01. **Standard Resistance Value: less than 5 Ω** Is the resistance value normal? **Y** Go to step 6. **N** Repair the open circuit terminal 2 of BCM wiring harness connector P24 and terminal 71 of the ECM wiring harness connector E01.
6. Replace the password transponder	
	A.Replace the password transponder of the remote key, and rematch the key. Is the system normal? **Y** Verify the system is normal. **N** Go to step 7.
7. Inspect the ECM power supply circuit	
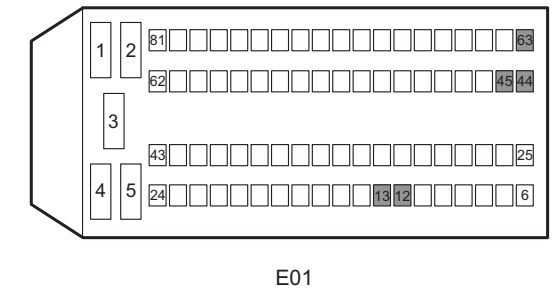 A3113031	A.Turn the ignition switch to position "LOCK". B.Measure from the back of ECM wiring harness connector E01. C.Turn the ignition switch to "ON" position and use a multimeter to measure the voltage between the terminal 12, 13, 44, 45 and 63 of the ECM wiring harness connector E01 and the power supply. **Standard Voltage Value: 11 ~ 14 V** Is the voltage normal？ **Y** Go to step 8. **N** Repair and inspect the ECM power supply circuit.

machinesoft.com 09120146259

Test conditions	Details/Results/Actions
8.Inspect the ECM ground circuit	
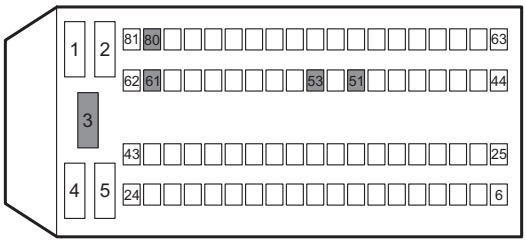 E01 A3113032	A.Turn the ignition switch to position "LOCK". B.Measure from the back of ECM wiring harness connector E01. C.Measure with a multimeter the resistance between the ECM wiring harness connector E01 terminal 3, 51, 53, 61 and 80 and the reliable ground. **Standard Resistance Value: less than 5 Ω** Is the resistance value normal? **Y** Go to step 9. **N** Inspect and repair the ECM ground circuit.
9. Replace the ECM	
	A.Replace the ECM. **Refer to: Engine Control Module (3.1.13 Electronic Control System - ME7, Removal and installation).** Is the system normal? **Y** Verify the system is normal. **N** Go to step 10.

mashinesoft.com 09120146259

Test conditions	Details/Results/Actions
10. Inspect the BCM power supply circuit	
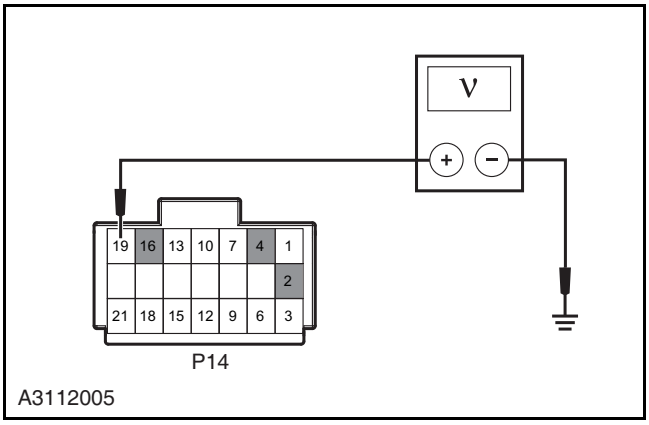 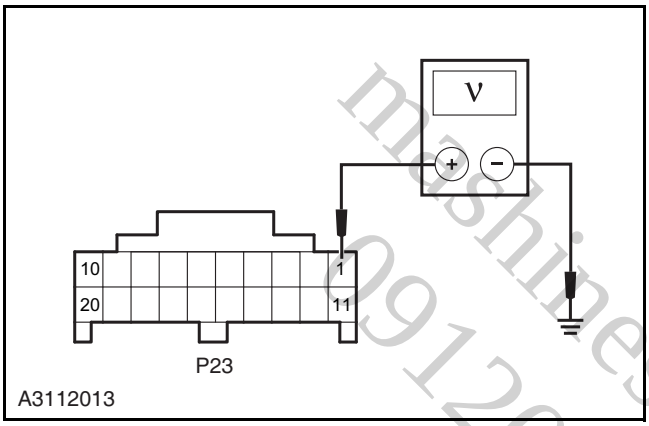	A.Turn the ignition switch to position "LOCK". B.Disconnect the battery cathode cable. C.Disconnect the body control module wiring harness connector P14, P23. D.Connect the battery negative cable. E.Turn the ignition switch to position "ON". F.Measure the voltage between the terminal 2, 4, 16, 19 body control module wiring harness connector P14, and terminal 1 of P23 and the reliable ground. **Standard Voltage Value: 11 ~ 14 V** Is the voltage normal？ **Y** Go to step 11. **N** Inspect and repair the BCM power supply circuit.

mushinesoft.com 09120146259

Test conditions	Details/Results/Actions
11. Inspect the BCM ground circuit	
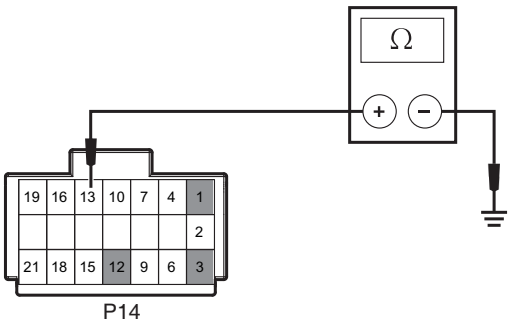 A3112008	A.Turn the ignition switch to position "LOCK". B.Disconnect the battery negative cable. C.Disconnect the body control module wiring harness connector P14, P25. D.Measure the resistance between terminal 1, 3, 12 and 13 of the BCM wiring harness connector P14 and terminal 19 of P25 and the reliable ground. **Standard Resistance Value: less than 5 Ω** Is the resistance value normal? **Y** Go to step 12. **N** Inspect and repair the BCM ground circuit.
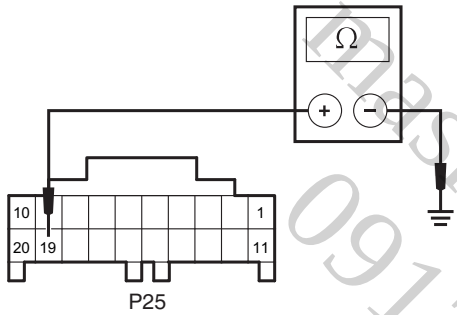 A3112009	
12.Replace the BCM	
	A.Replace the BCM. **Refer to: Body Control Module (4.3.14 Body Control System, Removal and Installation).** Confirm the repair is finished.

machinesoft.com 09120146259

Specification

Torque Specifications

Description	Nm	lb-ft	lb-in
Intake pressure temperature sensor retaining bolt	10	-	89
Spark plug	23	17	-
Throttle body retaining bolt	13	10	-
Engine control module retaining bolt	10	-	89
Crankshaft position sensor retaining bolt	10	-	89
Camshaft position sensor retaining bolt	10	-	89
Engine coolant temperature sensor bolt	20	15	-
Fuel distribution pipe assembly retaining bolt	23	17	-
Upstream oxygen sensor	50	37	-
Downstream oxygen sensor	50	37	-
Knock sensor retaining bolt	20	15	-
Accelerator pedal position sensor retaining screw	23	17	-
Oil control valve	10	-	89

mashinesoft.com
09120146259

Description and Operation

System Overview

Electrical control system is consisted of the following components:

1. Various sensors that judge the engine status and operation condition.
2. Engine control module that controls each actuator of EFI system based on the signal of each sensor.
3. Various electronic control actuators.

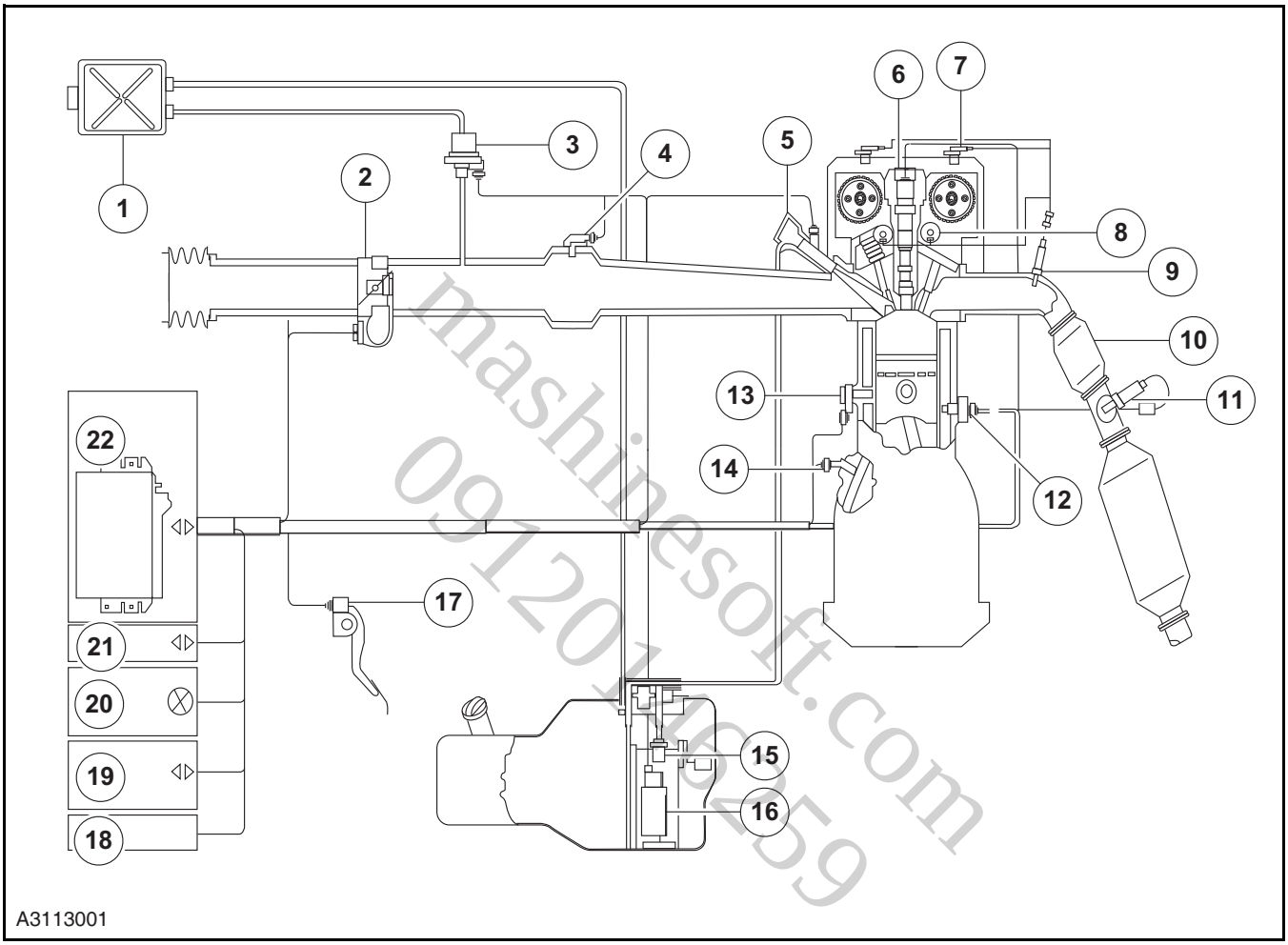

mashinesoft.com 0912014259

Item	Description	Item	Description
1	Carbon canister	12	Water temperature sensor
2	Electronic throttle body	13	Knock sensor
3	Carbon canister control valve	14	Crankshaft position sensor
4	Air intake pressure temperature sensor	15	Fuel pressure regulator
5	Fuel distribution pipe	16	Electronic fuel pump
6	Ignition coil and spark plug	17	Accelerator pedal
7	Camshaft position sensor	18	Anti - burglary
8	Oil control valve	19	Diagnostic interface
9	Pre - catalytic oxygen sensor	20	Fault indicator
10	Three-way catalytic converter	21	CAN
11	Post - catalytic oxygen sensor	22	Electronic control unit (ECU)

mashinesoft.com
09120146259

According to the performance, the electrical control system can be divided into the following subsystems

- Fuel injection control system
- Idle speed control system
- Fuel pump control system
- Ignition timing control system
- Radiator fan control system
- Fuel steam emission control system
- A/C control system
- DVVT control system

ME7 System Input / Output Signal

The main sensor input signals of ECM of ME7 system include:

- EFP signal
- Airflow signal
- Throttle rotor angle signal
- Coolant temperature signal
- Engine speed signal
- Phase signal
- Knock sensor signal
- Oxygen sensor signal
- Vehicle speed signal
- A/C pressure signal

After the above information goes into ECM, they are been processed then the required actuator control signals are generated, these signals are amplified in the output driver circuit, and are transmitted to each corresponding actuator, these control signals include:

- Electronic throttle motor
- Injection timing and injection duration
- Fuel pump relay
- Carbon canister control valve opening
- Ignition coil dwell angle and spark advance angle
- A/C compressor relay
- Cooling fan relay
- Oil control valve

Fuel Injection Control

ECM controls the injection time and the injection timing from injector to the cylinder head intake port based on various sensors signals, to ensure the appropriate mixed gas is provided in different driving conditions. There are two forms of injection timing, one is synchronous injection, which always injects at the same crankshaft angle, the other is non - synchronous injection, which is controlled based on inlet pressure temperature sensors and other sensor signals.

1. Synchronous injection

When the engine starts, the air in the intake manifold is still, the internal pressure of the intake manifold shows as the surrounding atmospheric pressure. Electrical throttle opens to a certain angle based on a fixed parameter that determined by the starting temperature. 4 injectors will inject synchronously in each cycle. Fuel injection amount varies according to the engine temperature. Before the engine reaches a certain speed, the mixture need to be enriched. Once the engine is running, the system immediately begins to reduce the cranking enrichment, until the end of starting (600 ~ 700 rpm), start enriching is completely canceled.

2. Non - synchronous injection

After engine starts and the following conditions are met, all fuel injectors will not be controlled by the pressure / temperature sensor.

- Fuel injection system starts to inject when fuel is disconnected.
- When the throttle opening rate is higher than the specified value (throttle opens too fast).

Non - synchronous injection system is generated quickly under above two situations.

3. Injection time

The main elements of identifying the fuel injection time is based on the basic injection time value thatcalculated according to the engine speed, the intake manifold pressure temperature (air intake flow rate), and a variety of the compensation value that is determined by the sensor signals which is used for

mashinesan.com 09120146250

testing the engine and the operating conditions.

4. Fuel cut - off

The injection stops (by stopping injector) while slowing down (for example, when throttle is placed on idling position and engine is running with high speed). It ensures that unburned gas will not be discharged and be started again in above different conditions.

Air - fuel Ratio Feedback Compensation (Closed - loop System)

The air - fuel mixture must be close to stoichiometric air - fuel ratio (14.7) to ensure that the three way catalyst conversion process is fully carried out and reach high purification rate of CO, HC and NOx in exhausting.

λ closed loop control system can work only with oxygen sensor equipped. Oxygen sensor monitors the oxygen content in the exhausting in the side location of three way catalytic converter, lean mixture (λ > 1) generate about 100mV sensor voltage, rich mixture (λ < 1) produces about 800 mV sensor voltage. When λ = 1, the sensor voltage has a jump. λ closed - loop control responds to the input signal (λ is greater than or equal to 1 lean mixture, λ is less than or equal to 1 rich mixture) modify the control variables, resulting in correction factor as a multiplier to correct the fuel injection duration. When any one of the following conditions is met, ECM exits the closed - loop control.

- When the engine starts to operate and the injection quantity is increased after the engine starts.
- When the engine coolant temperature is too low.
- When the load is high and fuel injection capacity is increasing.
- When the fuel is cut off.
- When the oxygen sensor is cooled.

maslinesoft.com 09120146259

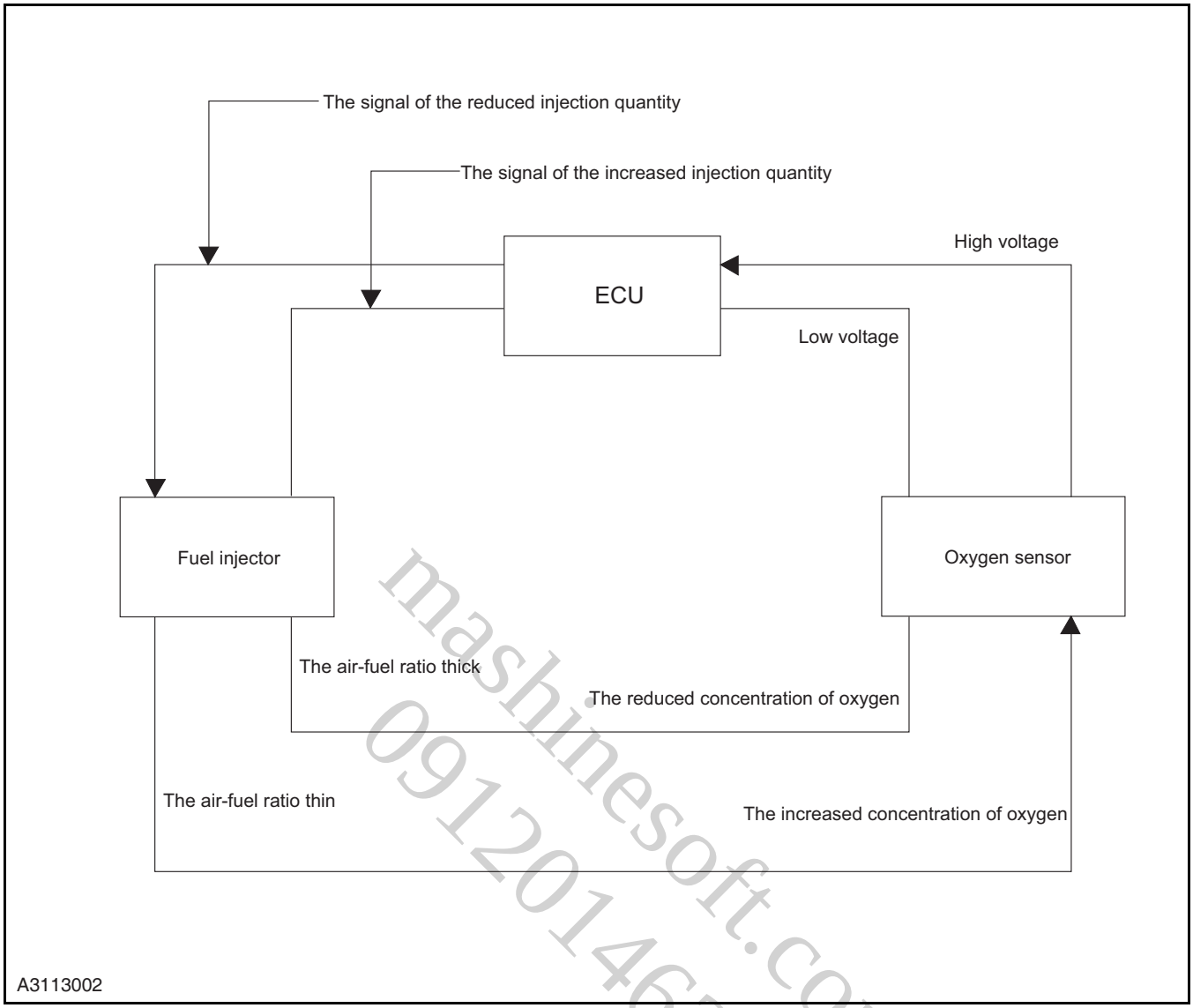

mashinesoft.com
09120146259

Idle Speed Control

The control system can keep the stability of the engine basic idle speed through ECM controlled electronic throttle, but the engine idle speed will change for the following reasons.

- Add load to the engine (for example, open A/C switch when adding electric load).
- Engine itself changes over time.
- Improve the starting performance of the engine.
- Adjust the air - fuel ratio during deceleration (reduction buffer function).
- When engine warm-up, improve its performance.

Operation:

Idle speed control is based on ECM effective output information, ECM inspects the engine operating status through the signals of various sensors and switches and controls the air flow by controlling the throttle opening through machinery throttle.

When the vehicle is stopped, the throttle is at idle position and the engine is at running state, at this time the engine speed is kept at specified idle speed.

Engine Idle speed (r/min)	A/C OFF		A/C ON	
	Electric load is off	Electric load is on	Electric load is off	Electric load is on
	700	750	800	850

Fuel Pump Control

The ECU controls the on and off of the fuel pump, in either of the following cases, it connects to the fuel pump through the fuel pump relay.

- 2 seconds after the ignition switch is turned off.
- When the engine is started (engine start signal is outputted to ECM).
- When camshaft position sensor signal is input in ECM.

mashinesoft.com
09120146259

Ignition Timing Control

The system adopts distributor - less, double - cylinder direct ignition, through the on and off of internal high power transistor (Darlington) to control the on - and - off of the ignition coil primary winding circuit, enable the ignition coil produce high voltage (the igniter internal structure varies with different engine types. Some engines are not equipped with igniters, and high - power triode transistor is directly equipped in the internal of electrical controller ECM. Some igniters only have a Darlington transistor as a switch, and other electrical control components and electrical controls works as a whole. In addition, some igniters have switch function, as well as the function of constant current control, closed angle control, cylinder identification and ignition monitoring).

The control unit includes the following three different forms:

- Ignition time when the engine start (initial ignition time)
- Engine after - start control
- Charge current time control

1. Ignition control after engine start

If the best ignition advance angle of the engine after starting can be confirmed as follows, then the ignition can occur in the most appropriate moment under different conditions of the engine.

Best ignition advance angle	=	Initial ignition advance angle	+	Basic ignition advance angle	+	Various compensation angles

When the throttle is at idle speed position, best ignition advance angle is reached based on the initial ignition advance angle, plus the the basic ignition advance angle that is determined by engine speed, engine cooling compensation and the relative idle stability advance compensation angle.

When the throttle opening is larger than idle speed position, it is also reached based on the initial ignition advance angle, plus the the basic ignition advance angle that is determined by engine speed, engine cooling compensation and the relative idle stability advance compensation angle.

Radiator Fan Control

The system controls the operation of radiator fan motor (on and off), radiator fan realizes the on - off control motor through the relay that controlled by ECM.

Radiator Fan Motor	Engine Cooling Temperature
OFF → ON (low speed)	97 ℃
ON → OFF (low speed)	94 ℃
OFF → ON (high speed)	102 ℃
ON → OFF (high speed)	99 ℃

When air conditioning is operated or stopped, the radiator fan motor should be turned on or off accordingly.

CAUTION: With A/C ON, the fan starts rotating and will run at high speed when high pressure of refrigerant exceeds 15.2 bar.

mashinesoft.com 09120146259

A/C Compressor Control

A/C request signal is sent to ECM which controls A/C relay to pick up and at the same time sends the speed increase signal to electronic throttle and switches on the electronic fan.

To ensure power output and protect the engine, the system may discontinue A/C operation under certain working conditions.

A/C working conditions:

- A/C stops working at temperature 108 ℃
- A/C resumes working at temperature 105 ℃

After startup of A/C and evaporator, the target idle speed of engine raises by 150 rpm.

DVVT Control

The engine variable valve timing (VVT) means that the variation of overlap of timing and opening of intake and exhaust valves is hydraulically VVT controlled to enable the camshaft to rotates at certain angles (rightwards, leftwards) and further advance or delay the time to drive the valve to open or close. The engine with VVT can increase intake charge and volumetric efficiency, the torque and power of engine can also be further improved.

DVVT is also called dual VVT, that is both intake camshaft and exhaust camshafts are VVT controlled. It can improve engine's power performance and economic results and also reduce engine's emission.

1. DVVT components:
   - Intake and exhaust camshafts with inserted helical tooth push rod unit.
   - Both intake and exhaust valves each has a VVT.
   - Two 3 - way solenoid change - over valves.
   - 2 Hall camshaft position sensors
2. DVVT advantages:
   - Engine torque increases at 1,500 ~ 2,000 RPM.
   - Smaller overlap angle of camshaft at idle, improving idle behavior and allowing for more complete combustion.
   - Exhaust camshaft adjustment for reduced NOX emissions and exhaust gas circulation.
   - Reduction in fuel consumption.
3. DVVT principle:
   - DVVT unit is used to change the intake and exhaust timing.
   - ECM computer monitors intake and exhaust camshaft position through dual camshaft position sensors.
   - ECM computer changes VVT control timing according to engine speed, coolant temperature and throttle position.

CAUTION: Single VVT is used on JL478QEB engine and the VVT control is only available on the intake camshaft.

Fuel vapor Emission Control

Fuel vapor emission control system is used to prevent fuel vapor from evaporation. This vapor is generated from the fuel during running or engine stopped, it goes into the gasoline carbon canister through the tank pressure control valve, and absorbed or stored by the carbon canister. This vapor is generated from the fuel during the running or engine stop, it goes into the carbon canister through the tank pressure control valve, and absorbed or stored in the carbon canister.

Carbon canister sewage valve is controlled by ECM based on various sensors signals.

Only when the following conditions are met, ECM will open the vacuum channel of carbon canister sewage valve.

- When the engine is at normal working temperature.
- When the engine speed is higher than the specified value.
- when the opening of the throttle is greater than the idle speed position (the close position of the throttle).
- When the engine is running within the required load.

The result is the carbon canister is purified due to the air flow goes through the carbon filter located at the bottom of the canister.

The fuel tank pressure control valve is used to maintain the constant tank pressure. When the fuel tank pressure is E and reaches specified value, this valve opens to make the vapor flow into the carbon canister. On the contrary, when the tank pressure is negative and reaches its specified value, open the valve so that air could go into the tank.

Component Description

Engine Control Module (ECM)

Engine control module ECM is installed at the right vibration absorber, to receive the input signals, output the control signal and inspect the system state, record the DTC when there is and turn on the malfunction lights.

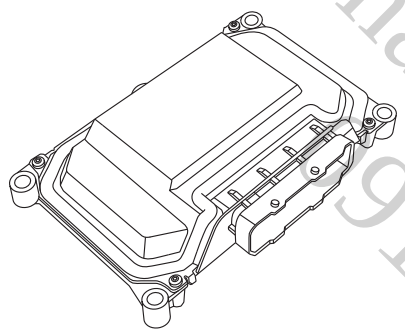

A3113004

Air Intake Pressure Temperature Sensor

Air intake temperature and pressure sensors are installed on the intake manifold, integrated with air intake pressure and temperature sensors. Two sensor's signals are taken as the signal for air measurement. The measurement of intake pressure sensing device changes as the intake manifold pressure changed that caused by the change of engine load and speed. It transforms the changes into output voltage. Intake air temperature sensor is a negative temperature coefficient resister.

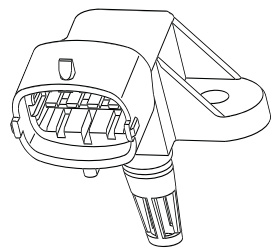

A3113005

Water Temperature Sensor ECT

The water temperature sensor is directly mounted near the coolant output plug in the cylinder head. Water temperature sensor is a negative temperature coefficient (NTC) resistor. ECM calculates coolant temperature by voltage drop of water temperature sensor. The signal of water temperature sensor is supplied to ECM to control cooling fan motor and to judge fuel and ignition according to engine status. Water temperature sensor output also offers input signal to instrument panel thermometer.

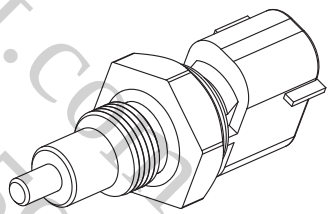

A3113006

Electronic Throttle Assembly

The electronic throttle assembly integrates the actuating motor and the two throttle position sensor. The electronic throttle valve casing is driven by the drive motor through a set of reducing mechanism and meanwhile the throttle position sensor can real - time monitor the motor position. The electronic throttle can adjust the engine load through electronic pedal signal, which can control the throttle opening through a DC motor to make the engine from the idle position to full load.

mashinesoft.com 09120146259

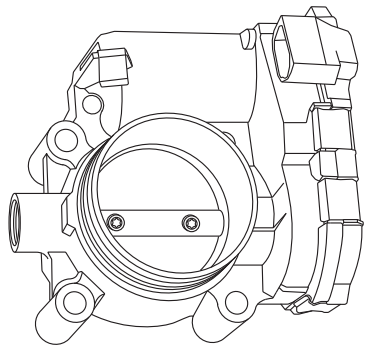
A3113007

Throttle opening feedback signal is provided by two potentiometers that integrated in the throttle body. Their power supply and grounding are common, provided by the engine module.

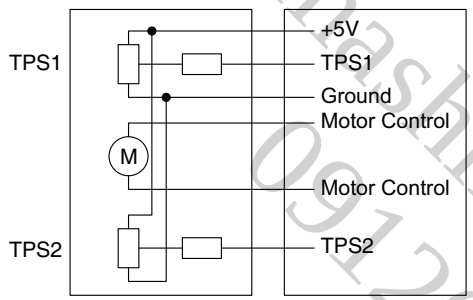

A3113008

Throttle position sensor is consisted of carbon composition resistor and sliding pointer. It is a linear output angle sensor, which is composed of two arc - shaped sliding contact resistors and two sliding contact arms. The revolving shaft of the sliding contact arm connected to the same shaft with the throttle shaft. Sliding contact resistor is with 5 V power supply voltage at both ends .

When the throttle rotates, the sliding contact arm rotates also, at the same time move along the sliding contact resistor, and will lead out the electrical potential of the contact point as output voltage. So it is actually proportional a voltage signal that of corner potentiometer, potentiometer output and throttle position.

Throttle drive motor is a mini motor. The motor drives a particular gear sector and a two - way spring, when the system is in power off state, the opening of throttle is guaranteed by this section to maintain at the position that greater than idle speed position, which however can not place at a too high security position , to guarantee that the vehicles have the ability to continue the driving, if the engine control system steps into the failure mode, step on the accelerator pedal, the electronic throttle body of the valve plate will not move.

Knock Sensor

The knock sensor is directly installed on the engine cylinder body and under the lower air intake manifold. Knock sensor will record the increased vibration when the engine body increases the combustion noise. ECM using the knock sensor signal to avoid fuel pre - ignition through adjusting the ignition and fuel supply characteristics.

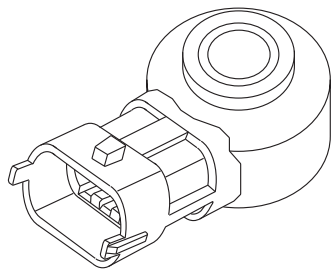
A3113009

Oil Control Valve

Oil control valve is installed on the right side of engine cylinder head . The oil control valve is controlled by the duty cycle signal of EMS to change the direction of oil circuit of VVT unit, thus changing the phase of VVT unit's camshaft and changing the valve timing.

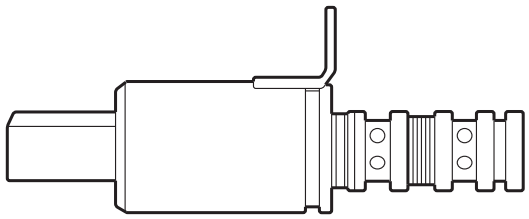
A3113161

machinesoft.com 09120146259

Camshaft Position Sensor

The camshaft position sensor is mounted on the rear of the valve chamber cover, and the signal wheel in the rear of the intake and exhaust camshafts synchronously operating with the intake and exhaust camshafts. The camshaft position sensor is a Hall effect sensor, to provide the phase information of the intake and exhaust camshafts for ECM determining the working cycle stroke of the engine, and to make ECM control the intake and exhaust variable timing solenoid valve according to the information of other engine sensors.

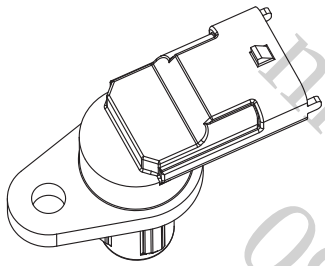

A3113010

Crankshaft Position Sensor

Crankshaft position sensor is a electromagnetic induction sensor on the clutch body and captures flywheel signal ring. Signal ring has 58 teeth and ECM judges top dead center position from signal of missing teeth. Camshaft position sensor can not be adjusted, and it is not required to set up process during installation.

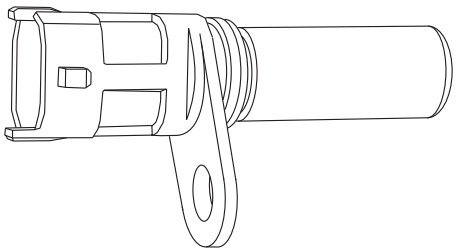

A3113011

Pre - Catalytic Oxygen Sensor

Pre - catalytic oxygen sensor is on the exhaust manifold, before the three - way catalytic device, it is a zirconia oxygen sensor. Pre - catalytic oxygen sensor is used to monitor the oxygen content of the gases that generated from the burning of air - fuel mixture in the combustion chamber. The signal from the pre - catalytic oxygen sensor is received by the ECM and is used to adjust the injector pulse width.

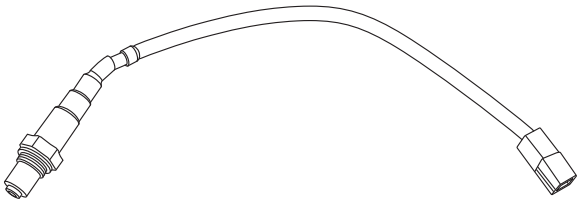

A3113013

Post - Catalytic Oxygen Sensor

Post - catalytic oxygen sensor located behind the three - way catalytic converters, used to detect the catalytic conversion capacity and oxygen storage capacity of the catalytic converters. The post - catalytic oxygen sensor is a zirconia oxygen sensor, and ECM receives the signals of post - catalytic oxygen sensor and compare it with the signal that from the pre - catalytic oxygen sensor. If the three - way catalytic converter is working normally, also the fuel the engine electrical control system is in closed loop control, the sensor voltage output with stable 0.45 V voltage.

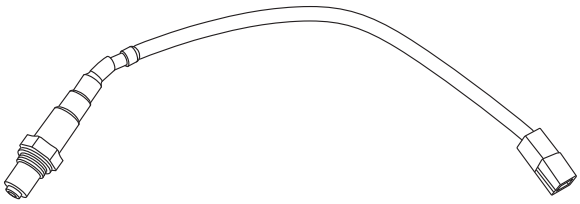

A3113013

mashinesoft.com 09120146259

Refrigerant Pressure Switch

Refrigerant pressure switch is located on the high pressure side of the refrigeration system, it provides cooling pipe status signals to ECM, ECM uses this information to control the air-conditioning solenoid clutch, the air-conditioning fan and the idle speed.

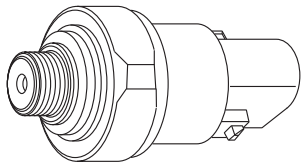

A3113015

Vehicle Speed Sensor (AT)

Speed sensor is installed on the transmission, the speed sensor is Hall - style, the working power is applied by the ECM controlled main relay, when the vehicle is driving, the sensor outputs rectangular pulse signal.

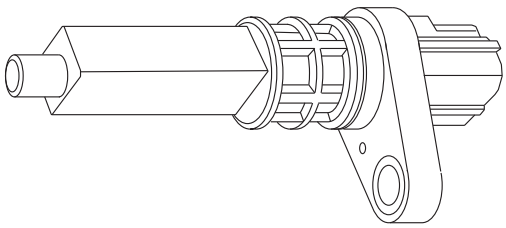

A3113016

Fuel Injector

Fuel injector is installed on the cylinder head, it follows the ECM instruction to inject fuel within the stipulated time, ECM controls the injector grounding signal. The injector is solenoid - controlled, the fuel injection quantity depends on the needle valve opening time which is the pulse width of the turning on electricity.

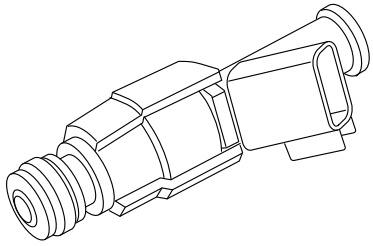

A3113017

Ignition Coil

The ignition coil is mounted on the upper thermostat seat. Ignition coil transforms the low voltage of primary winding into secondary winding high voltage, spark discharge through the spark plug, igniting the mixture of air and fuel within the cylinder. ECM controls the ignition coil primary coil to ground.

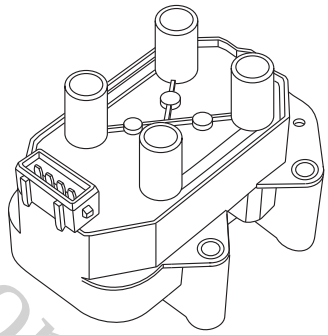

A3113018

mashinasoft.com 09120146259

Accelerator Pedal Position Sensor

The accelerator pedal position sensor has an internal damping design and contains two identical potentiometric sensors. The signal pointer of the sensor shares the same shift with the pedal. When the pedal is depressed, the potentiometer pointer rotates with the pedal coaxially and with the sliding of the pointer, the signal terminal outputs different voltage signals. To prevent signal distortion due to engine voltage fluctuations, a comparison circuit is used in the ECM, which compares signal voltage output by the sensor with reference voltage, and ECM uses percentage to determine the pedal amplitude. ECM compares signals input by sensor 1 and sensor 2, and judges together with engine speed, load and other sensors the true or false condition of the output signal. If signals from either of two sensors are determined as distortion, ECU will control the engine to enter into the fault mode, take restricted driving measures and maintain certain opening of the throttle.

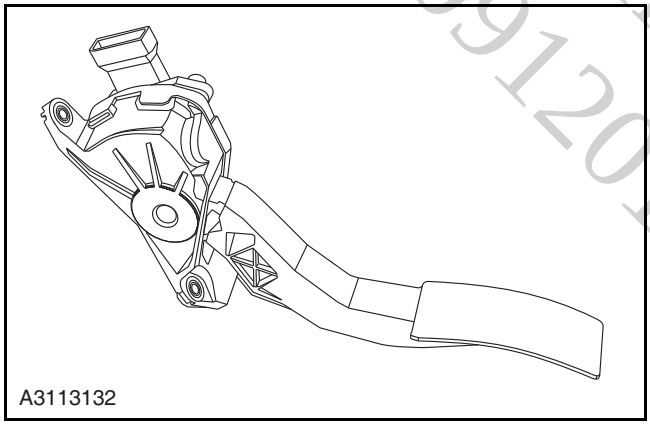
A3113132

Carbon Canister Sewage Solenoid

Carbon canister sewage solenoid is located at the side of cylinder head, to control the sewage air flow of carbon canister, carbon canister sewage solenoid cleaning flow is controlled by the duty cycle signal from the ECM, in the following condition, carbon canister will not conduct the discharge work:

- A certain time after engine cold start.
- Low engine coolant temperature.
- Engine idle speed operation period.
- High engine load period.
- The important sensor of the system fails.

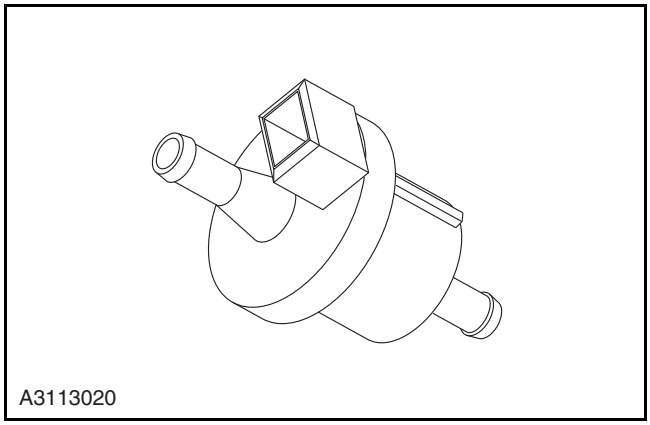
A3113020

Main Relay

Main relay is located in the engine compartment electric center, ECM controls the main relays to realize the control of fuel pump, fuel injector, carbon canister sewage solenoid power supply.

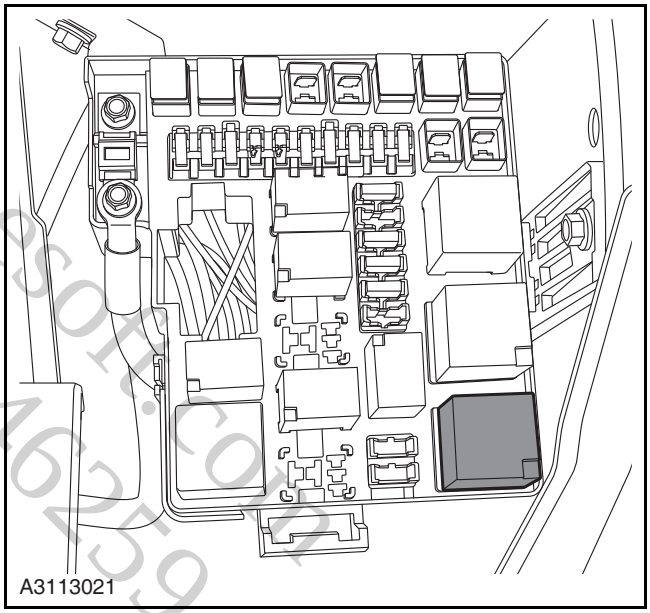
A3113021

Fuel Pump Relay and Fuel Pump

Fuel pump relay is located in the indoor electric center, fuel pump is installed in the fuel tank. ECM controls the pump relay closed, then the fuel pump starts working, the system uses no oil return fuel supply system, fuel pressure regulator is on the fuel pump assembly.

Dashinesoft.com 09120146259

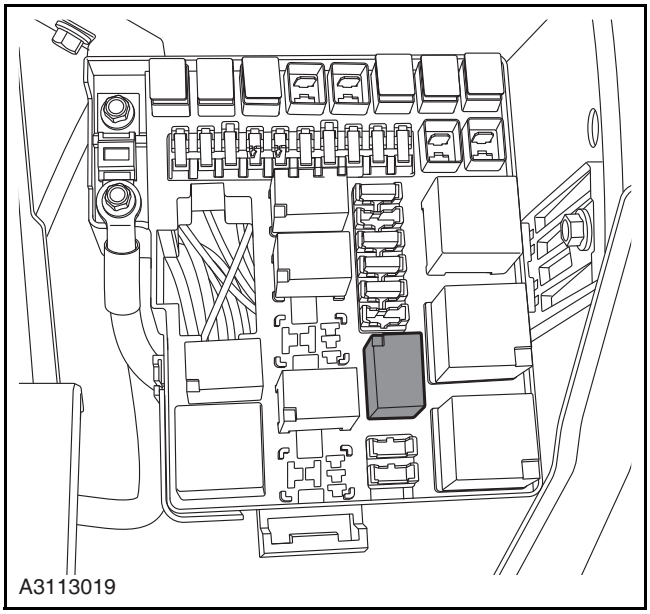

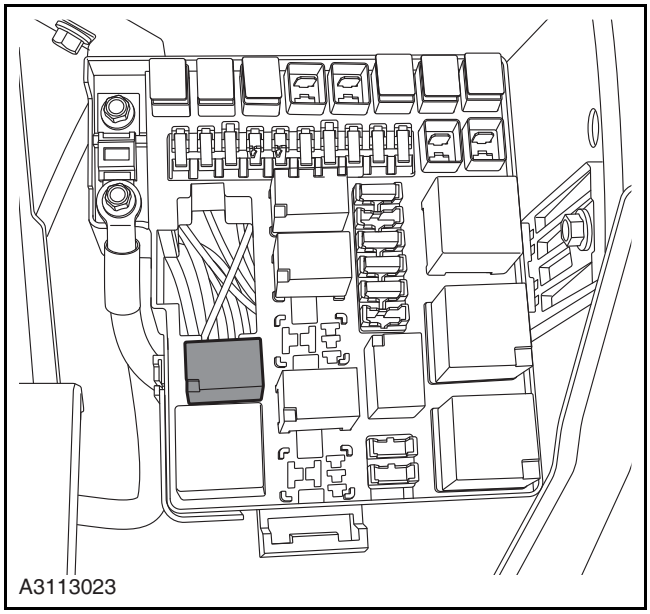

Fan High Speed Relay, Low Speed Relay

Fan high speed, low speed operation are controlled by the two relays ER01 and ER02, ECM controls the work of the two relays to achieve the high speed, and low speed operation.

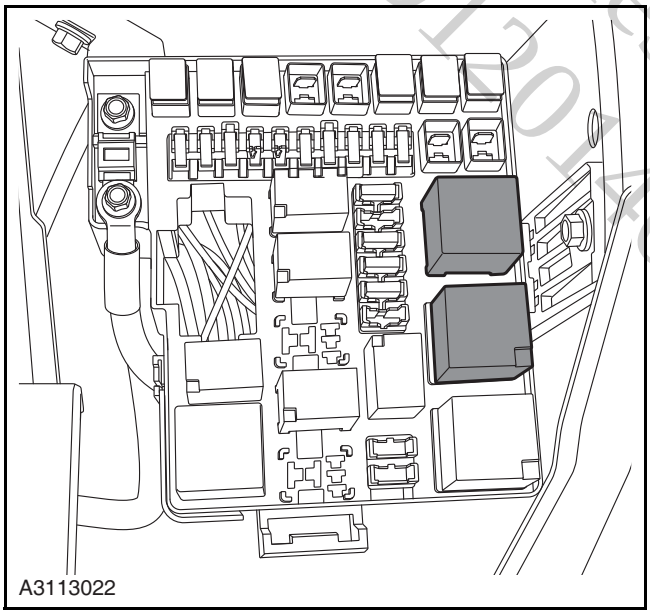

A/C Compressor Relay

A/C compressor relay is located in the engine compartment electric center. ECM controls the relay operation and realizes A/C compressor operation control according to A/C opening signal, refrigerant pressure switch and engine condition.

machinesoft.com 09120146259

Location View

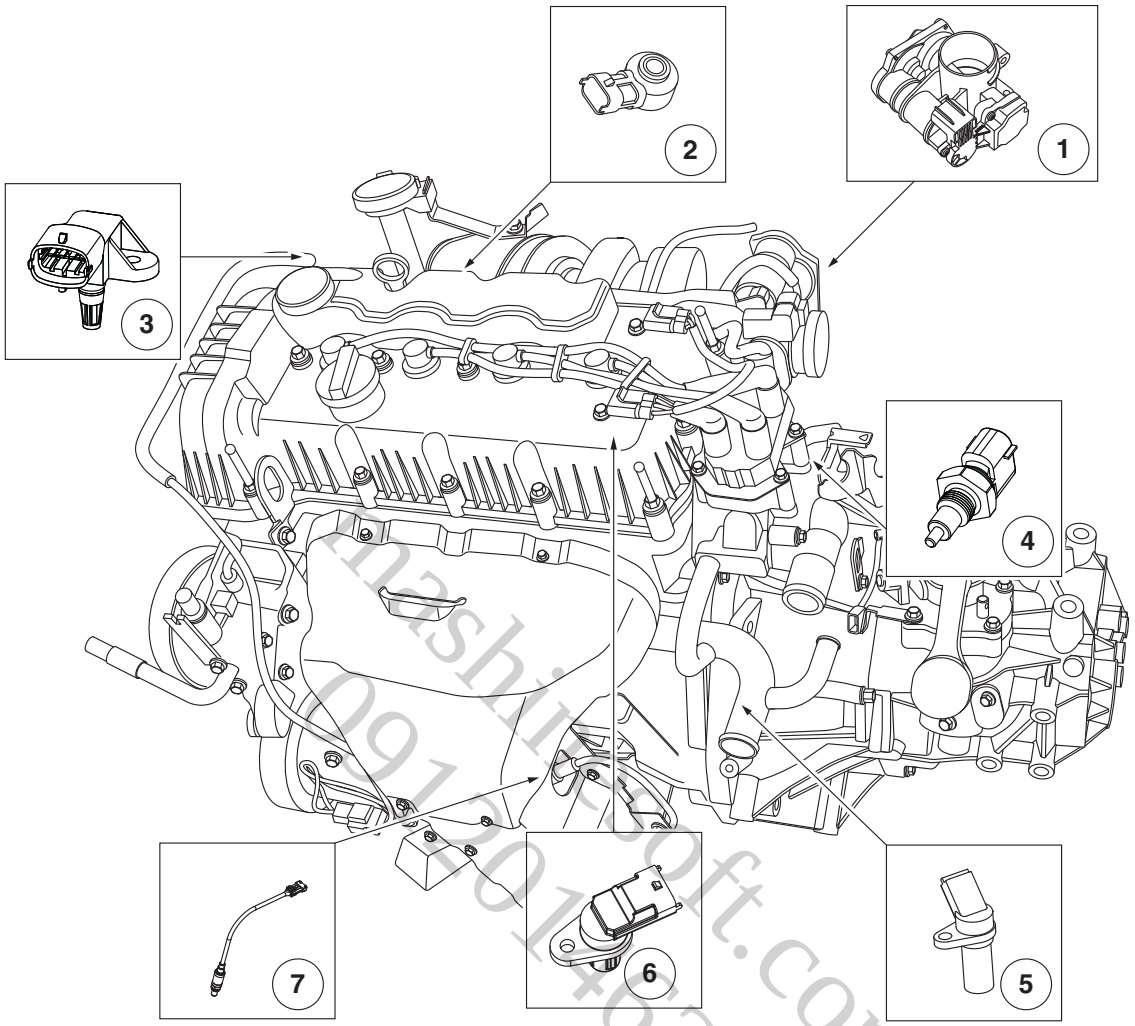

A3113134

Item	Description	Item	Description
1	Electronic throttle body	5	Crankshaft position sensor
2	Knock sensor	6	Camshaft position sensor
3	Intake temperature pressure sensor	7	Oxygen sensor
4	Coolant temperature sensor		

mashinesoft.com 09120146259

General Procedures

General Tool

Changan Auto Special Diagnostic Tool
Digital Multimeter

DTC Read Program

1. Carry out necessary vehicle preparation and appearance inspection.
2. Connect the diagnostic tool to the diagnosis interface in the cab.
3. Use the diagnostic tool to diagnose the trouble codes DTC.

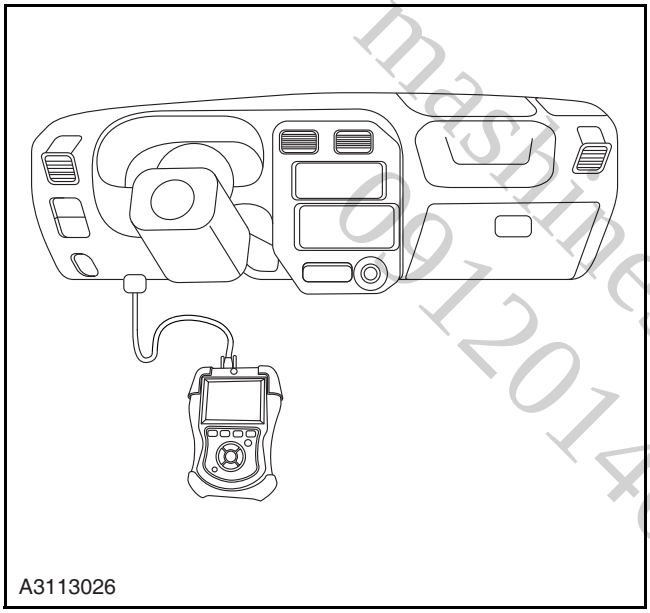
A3113026

Data Stream Read Program

1. Carry out necessary vehicle preparation and appearance inspection.
2. Connect the diagnostic tool to the diagnosis interface in the cab.
3. Use diagnostic tool to access to the engine system to read the data stream.

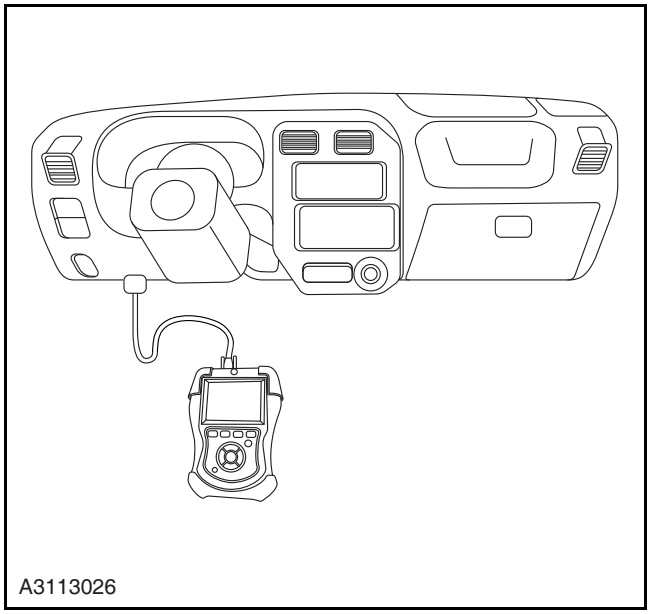
A3113026

Actuation Component Test Procedure

1. Carry out necessary vehicle preparations and appearance inspections.
2. Connect the diagnostic tool to the diagnosis interface in the cab.
3. Use the diagnostic tool to access to the active tests menu, carry out the components testing that is needed.

machinesoft.com 09120146259

Symptom Diagnosis and Testing

General Equipment

Multimeter
Changan Auto special diagnostic tool
Exhaust back - pressure gauge
Cylinder pressure gauge
Fuel pressure gauge

Inspection and Verification

1. Verify the customer concern.
2. Visually inspect for obvious signs of mechanical damage or electric damage.
3. If an obvious cause for an observed or reported concern is found, correct the cause (if possible), before proceeding to the next step.
4. If the cause is not visually evident, verify the symptom and confirm the symptom with diagnostic tool.

Visual Inspection Chart

Electrical
• Fuse
• Wiring harness
• Wiring harness plug
• Relay
• Sensor
• Switch
• Engine control module (ECM)

mashinesoft.com 09120146259

Intermittent Malfunction Diagnosis

CAUTION: Clear the DTC.

CAUTION: Carry out the simulation testing.

CAUTION: Inspect and shake the wiring harness, connectors and terminals.

If DTC inspection cannot confirm the fault, the fault occurs occasionally while using. Confirm the circuits and components that may lead to malfunction. Carry out the basic inspections as shown in the flow chart to find out trouble location effectively in many cases. Particularly the malfunctions such as bad contact of wiring harness connector.

Malfunction definition: This malfunction currently does not appear, but the historical malfunction diagnosis code record indicates that the malfunction occurred before. Or customer reports the malfunction, but as the malfunction is not related to the malfunction diagnosis code, and currently the malfunction symptoms can not show again.

Test Conditions	Details/Results/Actions
1. Vibration method	
	A. If driving on a tough roads, the malfunction occurs or becomes more serious, or the engine start vibration, perform the following steps. B. There are several reasons that will cause electric faults to the vehicle or engine vibration. Inspect the following items: • The connector is not fully in position. • The wiring harness does not have enough clearance. • The wiring harness layout cross the stand, or moving components. • The wiring harness lays too close to the high temperature components. C. Incorrect wiring, tight or loose wiring harness will lead the connecting cable to be squeezed between the components. D. The connector joint, the vibration location, the location of the wiring harness crossed, are all required for focus inspection, such as: wiring harness across the firewall and the body panels.

mashinesoft.com 09120146258

Test Conditions	Details/Results/Actions
2. Inspection method of switch connector or wiring harness	
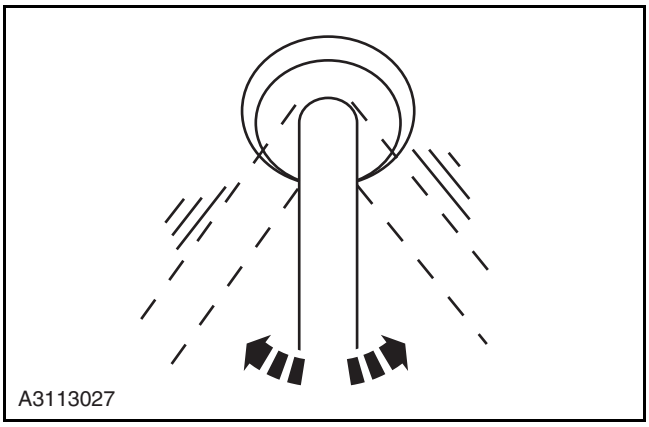	A. Connect the diagnostic tool to diagnosis interface (DLC). B. Turn the ignition switch to position "ON" (stop the engine). **CAUTION: If the engine is started and running, carry out the following procedures during its idle speed operation.** C. Access to the switch data stream that your are inspecting. D. Turn on the switch manually. E. When monitoring the data stream, vertically, horizontally gently shake each connector or wiring harness. If the data stream value is unstable, please inspect if there is a bad connection.
3. Inspection method of sensor connector or wiring harness	
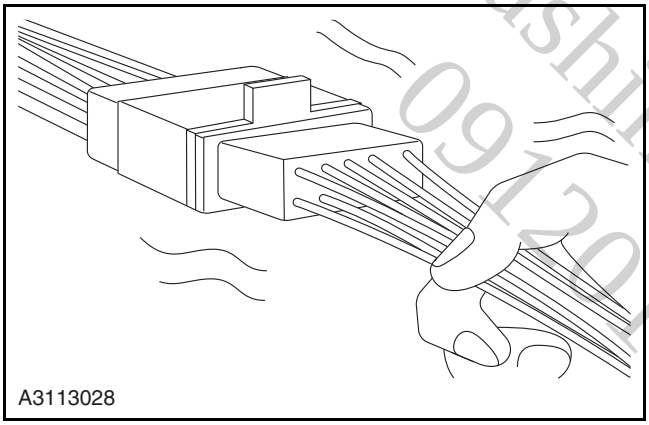	A. Connect the diagnostic tool to diagnosis interface (DLC). B. Turn the ignition switch to position "ON" (stop the engine). **CAUTION: If the engine is started and running, carry out the following procedures during its idle speed operation.** C. Access to the switch data stream that your are inspecting. D. When monitoring the data stream, vertically, horizontally gently shake each connector or wiring harness. If the data stream value is unstable, please inspect if there is a bad connection.

mashinesoft.com 0912014659

Test Conditions	Details/Results/Actions
4. Inspect method of actuator or relay	
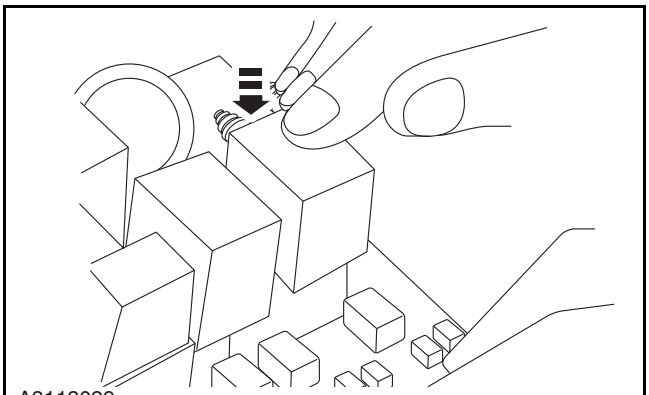 A3113029	A. Connect the diagnostic tool to diagnosis interface (DLC). B. Turn the ignition switch to position "ON" (stop the engine). **CAUTION: If the engine is started and running, carry out the following procedures during its idle speed operation.** C. Get the output state control function ready for the actuator or relay that you are inspecting. D. When the output state control function is activated, vibrate the actuator or the relay with fingers for 3 seconds. If you can hear unstable "clicking" sound, inspect to see whether there are bad connections or the actuator and / or the relay is improperly installed. **CAUTION: Strong vibration of the relay may cause the relay disconnection.**
5. Water sprinkling method	
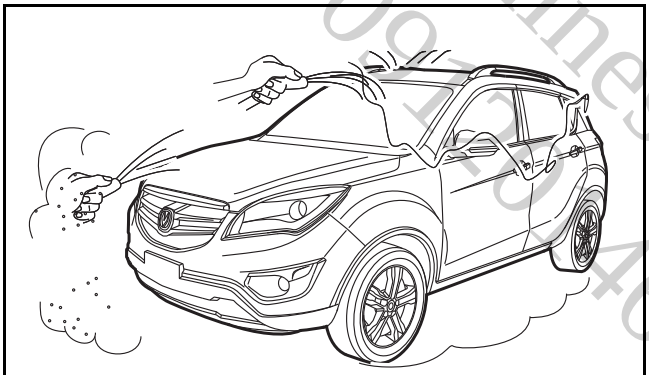 A3113030	If the malfunction only occurs in the high humidity, or snow / rain weather, the following steps should be performed: Through spraying water on the face of the radiator to indirectly change the temperature and the humidity. If a vehicle is easily leaked, it may damage the control module. In detecting the existence of a vehicle leaking problem, special precautions must be taken. Special protective measures must be taken while inspecting whether the vehicle leaks. A. If you want to inspect the sensor or switch, connect the diagnostic tool to diagnose interface DLC. B. Turn the ignition switch to position "ON" (stop the engine). **CAUTION: If the engine is started and running, carry out the following procedures during its idle speed process.** C. If you want to inspect the sensor or switch, access to the data stream of the sensor or switch. D. If you want to inspect the switch, manually connect it. E. Spray water onto the vehicle, or drive the vehicle pass the vehicle washing bay. If the data stream value is unstable or fails, please repair or replace the components when necessary.

mashinesoft.com 0912046259

Symptom Chart

If the fault occurs, but there is no DTC stored in the ECM for this fault, and can not confirm the cause, then follow the procedure to diagnose the fault and eliminate it.

Symptom	Possible Sources	Action
Engine can not start at normal start speed	• Crankshaft position sensor • Fuel pump • Ignition coil • ECM • Engine mechanical • Immobilizer system	**Refer to: Engine Can Not Start in Normal Start Speed Diagnosis (3.1.13 Electronic Control System - ME7, Symptom Diagnosis and Testing).**
Difficult cold start	• Water temperature sensor • Spark plug • Fuel pump • Fuel Injector • Throttle body • Engine mechanical • Engine control module (ECM) circuit	**Refer to: Cold Start Problem Diagnosis (3.1.13 Electronic Control System - ME7, Symptom Diagnosis and Testing).**
Warm start problem	• Water temperature sensor • Ignition coil • Fuel pump • Engine control module (ECM) circuit	**Refer to: Warm Start Problem Diagnosis (3.1.13 Electronic Control System - ME7, Symptom Diagnosis and Testing).**
Normal start but unstable idle speed at any time	• Air Intake system • Spark plug • Throttle body • Ignition timing • Engine mechanical • Engine control module (ECM) circuit	**Refer to: Normal Start But Unstable Idle Speed at Any Time Diagnosis (3.1.13 Electronic Control System - ME7, Symptom Diagnosis and Testing).**
Normal start but unstable idle speed or flameout under partial load	• A/C system • Throttle body • Fuel Injector	**Refer to:** **Refer to: Normal Start, Unstable Idling or Flameout With Partial Load (Such as Open the A/C) Diagnosiss (3.1.13 Electronic Control System - ME7, Symptom Diagnosis and Testing).**

Mastinesoft.com 08120146259

Symptom	Possible Sources	Action
Normal start but idle too high	• Water temperature sensor • Throttle body • Vacuum tube • Ignition timing • Control module circuit	**Refer to: Normal Start, Idle Too High Diagnosis (3.1.13 Electronic Control System - ME7, Symptom Diagnosis and Testing).**
Speed does not increase or flameout at acceleration Acceleration problem Acceleration slow reaction Acceleration weak, poor performance	• Air Intake system • Inlet air pressure sensor • Throttle body • Fuel Injector • Spark plug • Ignition timing • Fuel • Exhaust block • Control module circuit	**Refer to: Acceleration Fault Diagnosis (3.1.13 Electronic Control System - ME7, Symptom Diagnosis and Testing).**
A/C control not accurate	• A/C switch • Refrigerant pressure switch • A/C relay • Solenoid clutch • ECM	**Refer to: Insufficient Cooling Diagnosis (4.1.1 Heating, Ventilation and Air Conditioning, Symptom Diagnosis and Testing).**
Unstable engine operation	• Oxygen sensor • Fuel Injector • Spark plug • Ignition timing • Fuel pressure • Loose retaining bolts or damaged engine mounting components • Control module circuit	**Refer to: Unstable Engine Operation Diagnosis (3.1.13 Electronic Control System - ME7, Symptom Diagnosis and Testing).**
Easy flameout at start	• Crankshaft position sensor • Fuel Injector • Spark plug • Ignition timing • Fuel pressure • A/C compressor • Control module circuit	**Refer to: Easy Flameout at Start Diagnosis (3.1.13 Engine Electrical control System - ME7, Symptom Diagnosis and Testing).**

machinesoft.com 09120146259

Symptom	Possible Sources	Action
Emergency during vehicle running	• MAP sensor, APP sensor • Incorrect A/C system operation • No signal from CMP sensor or the signal is unstable • Air intake system components leak • Purge solenoid fault • Unstable signal from CKP sensor • Vacuum leakage • Poor fuel quality • Intermittent fault of the main relay and the fuel pump relay • Throttle body fault • Engine overheating • Spark plug fault • Ignition timing • Exhaust system restrictions • Inadequate fuel pressure • Fuel pump mechanical fault • Fuel Injector • Unstable signal of APP sensor	**Refer to: Emergency in Driving Diagnosis (3.1.13 Electronic Control System - ME7, Symptom Diagnose and Test).**

machinesoft.com 0012014 6259

Symptom	Possible Sources	Action
Flameout during coasting	• Vacuum leak • Air intake system leakage • Air / fuel mixing ratio improper control • Engine electronic control of fuel evaporative emissions system fault • APP sensor or related circuit fault • MAP sensor or related circuit fault • Incorrect operation of A/C solenoid clutch • Fuel Injector • Spark plug • Ignition timing • Fuel • Exhaust block	**Refer to: Flameout During Coasting Diagnosis (3.1.13 Electronic Control System - ME7, Symptom Diagnosis and Testing).**
MIL indicator is always on	• Instrument circuit • Instrument • ECM • ECM circuit • CAN network	**Refer to: MIL Indicator Fault Diagnosis (3.1.13 Electronic Control System - ME7, Symptom Diagnosis and Testing).**
MIL lamp is not on	• MIL lamp bulb • Instrument circuit • Instrument • ECM • ECM circuit • CAN network	Replace the instrument. **Refer to: Instrument Assembly (4.3.2 Instrument, Removal and Installation).** **Refer to: MIL Indicator Fault Diagnosis (3.1.13 Electronic Control System - ME7, Symptom Diagnosis and Testing).**

machinesoft.com 0912014259

Engine Can Not Start at Normal Start Speed Diagnosis

Test Conditions	Details/Results/Actions
1. Inspect the trouble code	
	A. Connect the diagnostic tool. B. Turn the ignition switch to position "ON", diagnose the engine system. Is there any DTC? **Y** Go to DTC diagnosis procedures. **Refer to: DTC Diagnostic Procedure Index (3.1.13 Electrical Control System - ME7, DTC Diagnosis and Testing).** **N** Go to step 2.
2. Inspect the ignition system	
	A. Turn the ignition switch to position "LOCK". B. Carry out the ignition spark test. **Refer to: Ignition Spark Testing (3.1.8 Ignition System, General Procedures).** Is the spark plug ignition spark test normal? **Y** Go to step 3. **N** Inspect the ignition system. **Refer to: Spark Plugs Not Flash Over Diagnosis (3.1.8 Ignition System, Symptom Diagnosis and Testing).**
3. Inspect the fuel pressure	
	A. Turn the ignition switch to position "LOCK". B. Measure the fuel pressure. **Refer to: Fuel System Pressure Test (3.1.7 Fuel System, General Procedures).** Is the fuel pressure normal? **Y** Go to step 4. **N** Inspect the fuel system. **Refer to: Fuel Pump Away From Work Diagnosis (3.1.7 Fuel System, Symptom Diagnosis and Testing).**

mashinesoft.com 09120146289

Test Conditions	Details/Results/Actions
4. Inspect the engine compression pressure	
	A. Inspect the engine compression pressure. **Refer to: Cylinder Compression Pressure Inspection (3.1.2 Mechanical System, General Procedures).** Is the cylinder compression pressure normal? **Y** Go to step 5. **N** Inspect the engine mechanical system.
5. Inspect the engine immobilizer system	
	A. Inspect the engine immobilizer system. Is the engine immobilizer system activated? **Y** Repair the immobilizer system, remove the immobilizer activation. **Refer to: ECM Always Detects That the Engine Anti - theft Unreleased Fault Diagnosis (3.1.12 Immobilizer System, Symptom Diagnosis and Testing).** **N** Go to step 6.
6. Inspect the water in the fuel	
	A. Remove the fuel filter joint. **Refer to: Replace Fuel Filter (3.1.7 Fuel System, Removal and Installation).** B. Drain the fuel in the fuel filter and inspect the water in the fuel. Is there any water in fuel tank? **Y** Remove the water that mixed in the fuel, add high standard pure fuel. **N** Go to step 7.

mashinesoft.com 09120146259

Test Conditions	Details/Results/Actions
7. Inspect the ECM power supply circuit	
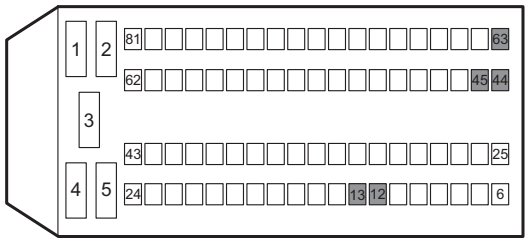 E01 A3113031	A. Turn the ignition switch to position "LOCK". B. Measure from the back of ECM wiring harness connector E01. C. Turn the ignition switch to "ON" position and use a multimeter to measure the voltage between the terminals 12, 13, 44, 45 and 63 of the ECM wiring harness connector E01 and the power supply. **Standard Voltage Value: 11 ~ 14 V** Is the voltage normal? **Y** Go to step 8. **N** Repair and inspect the ECM power supply circuit.
8. Inspect the ECM ground circuit	
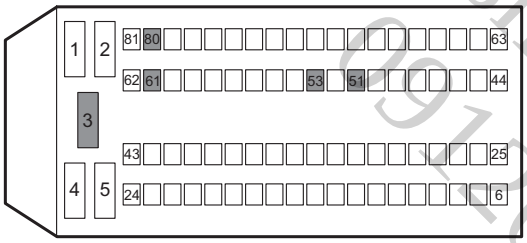 E01 A3113032	A. Turn the ignition switch to position "LOCK". B. Measure from the back of ECM wiring harness connector E01. C. Measure with a multimeter the resistance between the ECM wiring harness connector E01 terminal 3, 51, 53, 61 and 80 and the reliable grounding. **Standard Resistance Value: less than 5 Ω** Is the resistance value normal? **Y** Replace the engine control module. **Refer to: Engine Control Module (3.1.13 Electronic Control System - ME7, Removal and Installation).** **N** Inspect and repair the ECM ground circuit.

mashinesoft.com 69120146259

Difficult Cold Start Diagnosis

Test Conditions	Details/Results/Actions
1. Inspect the trouble code	
	A. Connect the diagnostic tool B. Turn the ignition switch to position "ON", diagnose the engine system. Is there any DTC? **Y** Go to trouble code diagnosis procedure. **Refer to: DTC Diagnosis Procedure Index (3.1.13 Electrical control System - ME7, DTC Diagnosis and Testing).** **N** Go to step 2.
2. Inspect the throttle	
	A. Start the engine by stepping on the accelerator lightly. Can the engine be started easily? **Y** Clean the throttle. **N** Go to step 3.
3. Inspect the ignition system	
	A. Turn the ignition switch to position "LOCK". B. Carry out the ignition spark test. **Refer to: Ignition Spark Testing (3.1.8 Ignition System, General Procedures).** Is the spark plug ignition spark test normal? **Y** Go to step 4. **N** Inspect the ignition system. **Refer to: Spark Plugs Not Flash Over Diagnosis (3.1.8 Ignition System, Symptom Diagnosis and Testing).**

mashinesoft.com 09120146259

Test Conditions	Details/Results/Actions
4. Inspect the fuel pressure	
	A. Turn the ignition switch to position "LOCK". B. Measure the fuel pressure. **Refer to: Fuel System Pressure Test (3.1.7 Fuel System, General Procedures).** Is the fuel pressure normal? **Y** Go to step 5. **N** Inspect the fuel system. **Refer to: Fuel Pump Not Work Diagnosis (3.1.7 Fuel System, Symptom Diagnosis and Testing).**
5. Inspect the water temperature sensor	
	A. Disconnect the connector E22 of the water temperature sensor. B. Install in series of a 2,500 Ω resistor at the temperature sensor joints to replace the water temperature sensor. C. Engine cold start. Can the engine be started easily? **Y** Replace the water temperature sensor. **N** Go to step 6.
6. Inspect the compression pressure	
	A. Inspect the engine compression pressure. **Refer to: Cylinder Compression Pressure Inspection (3.1.2 Mechanical System, General Procedures).** Is the pressure insufficient in any cylinder? **Y** Go to step 7. **N** Inspect the engine mechanical system.

mashinesoft.com 09120146259

Test Conditions	Details/Results/Actions
7. Inspect the fuel injector	
	A. Remove fuel injector. B.Use fuel Injector dedicated cleaning analyzer inspects the fuel injector for leakage or blockage. Is the fuel injector normal? **Y** Go to step 8. **N** Replace the fuel injector. **Refer to: Fuel Injector (3.1.13 Electronic Control System - ME7, Removal and Installation).**
8. Inspect the ECM power supply circuit	
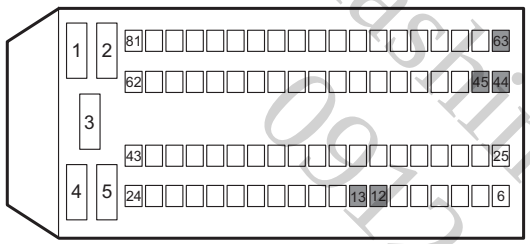 E01 A3113031	A. Turn the ignition switch to position "LOCK". B. Measure from the back of ECM wiring harness connector E01. C. Turn the ignition switch to "ON" position and use a multimeter to measure the voltage between the terminals 12, 13, 44, 45 and 63 of the ECM wiring harness connector E01 and the power supply. **Standard Voltage Value: 11 ~ 14 V** Is the voltage normal? **Y** Go to step 9. **N** Repair and inspect the ECM power supply circuit.
9. Inspect the ECM ground circuit	
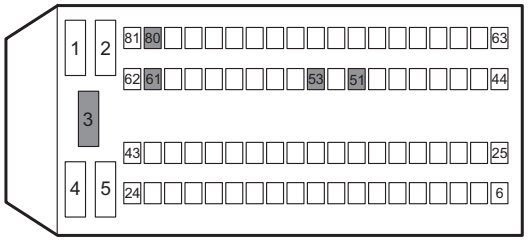 E01 A3113032	A. Turn the ignition switch to position "LOCK". B. Measure from the back of ECM wiring harness connector E01. C. Measure with a multimeter the resistance between terminal 3, 51, 53, 61 and 80 of the ECM wiring harness connector E01 and the reliable grounding. **Standard Resistance Value: less than 5 Ω** Is the resistance value normal? **Y** Replace the engine control module. **Refer to: Engine Control Module (3.1.13 Electronic Control System - ME7, Removal and Installation).** **N** Inspect and repair the ECM ground circuit.

machinesoft.com 0912014625

Difficult Warm Start Diagnosis

Test Conditions	Details/Results/Actions
1. Inspect the trouble code	
	A. Connect the diagnostic tool B. Turn the ignition switch to position "ON", diagnose the engine system. Is there any DTC? **Y** Go to trouble code diagnosis procedure. **Refer to: DTC Diagnostic Procedure Index (3.1.13 Electrical Control System - ME7, DTC Diagnosis and Testing).** **N** Go to step 2.
2. Inspect the ignition system	
	A. Turn the ignition switch to position "LOCK". B. Carry out the ignition spark test. **Refer to: Ignition Spark Testing (3.1.8 Ignition System, General Procedures).** Is the spark plug ignition spark test normal? **Y** Go to step 3. **N** Inspect the ignition system. **Refer to: Spark Plugs Not Flash Over Diagnosis (3.1.8 Ignition System, Symptom Diagnosis and Testing).**
3. Inspect the fuel pressure	
	A. Turn the ignition switch to position "LOCK". B. Measure the fuel pressure. **Refer to: Fuel System Pressure Test (3.1.7 Fuel System, General Procedures).** Is the fuel pressure normal? **Y** Go to step 4. **N** Inspect the fuel system. **Refer to: Fuel Pump Not Work Diagnosis (3.1.7 Fuel System, Symptom Diagnosis and Testing).**

mashinesoft.com 09120146289

Test Conditions	Details/Results/Actions
4. Inspect the water temperature sensor	
	A. Disconnect the connector E22 of the water temperature sensor. B. Install in series of a 300 Ω resistor at the temperature sensor joints to replace the water temperature sensor. C. Start the engine. Can the engine be started easily? **Y** Replace the water temperature sensor. **N** Go to step 5.
5. Inspect the fuel	
	Is the fault caused by just refueling? **Y** Replace the fuel. **N** Go to step 6.
6. Inspect the ECM power supply circuit	
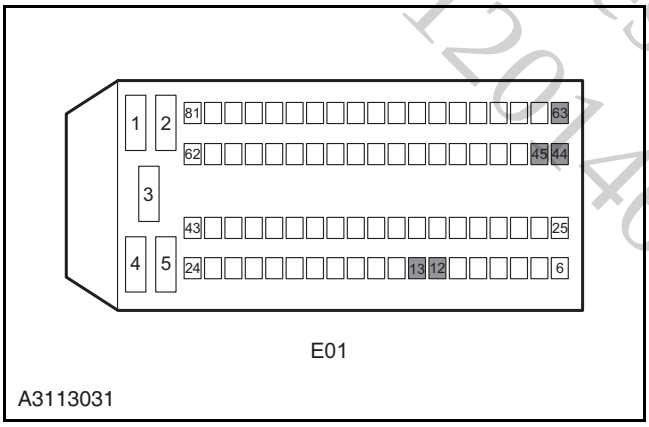	A. Turn the ignition switch to position "LOCK". B. Measure from the back of ECM wiring harness connector E01. C. Turn the ignition switch to "ON" position and use a multimeter to measure the voltage between the terminals 12, 13, 44,45 and 63 of the ECM wiring harness connector E01 and the power supply. **Standard Voltage Value: 11 ~ 14 V** Is the voltage normal? **Y** Go to step 7. **N** Repair and inspect the ECM power supply circuit.

mashinesoft.com 09120146259

Test Conditions	Details/Results/Actions
7. Inspect the ECM ground circuit	
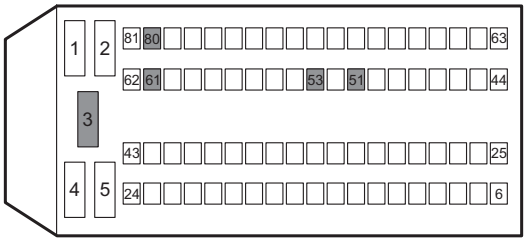 E01 A3113032	A. Turn the ignition switch to position "LOCK". B. Measure from the back of ECM wiring harness connector E01. C. Measure with a multimeter the resistance between terminal 3, 51, 53, 61 and 80 of the ECM wiring harness connector E01 and the reliable grounding. **Standard Resistance Value: less than 5 Ω** Is the resistance value normal? **Y** Replace the engine control module. **Refer to: Engine Control Module (3.1.13 Electronic Control System - ME7, Removal and Installation).** **N** Inspect and repair the ECM ground circuit.

Normal Start, But Unstable Idling at All Time Diagnosis

Test Conditions	Details/Results/Actions
1. Inspect the trouble code	
	A. Connect the diagnostic tool. B. Turn the ignition switch to position "ON", diagnose the engine system. Is there any DTC? **Y** Go to trouble code diagnosis procedure. **Refer to: DTC Diagnostic Procedure Index (3.1.13 Electrical Control System - ME7, DTC Diagnosis and Testing).** **N** Go to step 2.

mashinesoft.com 09120146259

Test Conditions	Details/Results/Actions
2. Inspect the air intake system	
	A. Turn the ignition switch to position "LOCK". B. Inspect the air intake system for block. C. Inspect the air intake system for leakage. **Refer to: Air Intake System Leakage Diagnosis (3.1.5 Intake System, Symptom Diagnosis and Testing).** Is the air intake system normal? **Y** Go to step 3. **N** Repair the air intake system.
3. Inspect the throttle	
	A. Turn the ignition switch to position "LOCK". B. Inspect the throttle for stuck. C. Inspect the throttle for carbon deposition. Is the throttle normal? **Y** Go to step 4. **N** Clean or replace the throttle.
4. Inspect the spark plug	
	A. Remove the spark plug. B. Inspect the spark plug in each cylinder and whether the model and clearance meet the standard **Refer to: Spark Plug Test (3.1.8 Ignition System, General Procedures).** Is the spark plug in each cylinder normal? **Y** Go to step 5. **N** Replace the spark plug.

mashinesoft.com 09120146259

Test Conditions	Details/Results/Actions
5. Inspect the fuel injector	
	A. Remove the fuel injector. B. Use fuel Injector dedicated cleaning analyzer inspects the fuel injector for leakage, blockages or the phenomenon of flow out of tolerance. Is the fuel injector normal? **Y** Go to step 6. **N** Replace the fuel injector. **Refer to: Fuel Injector (3.1.13 Electronic Control System - ME7, Removal and Installation).**
6. Inspect the fuel	
	A. Remove the fuel filter joint. **Refer to: Fuel Filter (3.1.7 Fuel System, Removal and Installation).** B. Release the fuel in the filter and inspect the water in the fuel. Is there any water in fuel tank? **Y** Remove the water that mixed in the fuel, add high standard pure fuel. **N** Go to step 7.
7. Inspect compression pressure	
	A. Inspect the engine compression pressure. **Refer to: Cylinder Compression Pressure Inspection (3.1.2 Mechanical System, General Procedures).** Is there insufficient pressure or big differences in any cylinder? **Y** Go to step 8. **N** Inspect the engine mechanical system.

mashinesoft.com 09120146259

Test Conditions	Details/Results/Actions
8. Inspect the ignition timing	
	A. Inspect the ignition sequence. B. Inspect the ignition timing. **Refer to: Timing Inspection (3.1.2 Mechanical System, General Procedures).** Are the ignition sequence and ignition timing normal? **Y** Go to step 9. **N** Adjust the ignition timing.
9. Inspect the ECM power supply circuit	
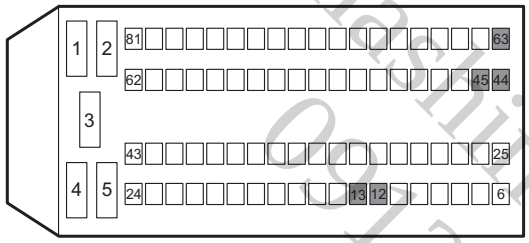 E01 A3113031	A. Turn the ignition switch to position "LOCK". B. Measure from the back of ECM wiring harness connector E01. C. Turn the ignition switch to "ON" position and use a multimeter to measure the voltage between the terminals 12, 13, 44, 45 and 63 of the ECM wiring harness connector E01 and the power supply. **Standard Voltage Value: 11 ~ 14 V** Is the voltage normal? **Y** Go to step 10. **N** Repair and inspect the ECM power supply circuit.
10. Inspect the ECM ground circuit	
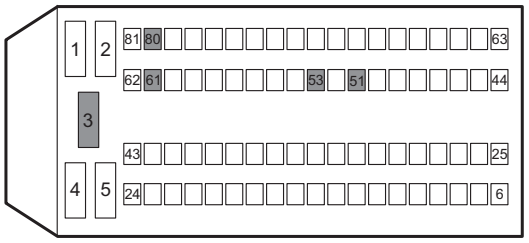 E01 A3113032	A. Turn the ignition switch to position "LOCK". B. Measure from the back of ECM wiring harness connector E01. C. Measure with a multimeter the resistance between the ECM wiring harness connector E01 terminal 3, 51, 53, 61 and 80 and the reliable grounding. **Standard Resistance Value: less than 5 Ω** Is the resistance value normal? **Y** Replace the engine control module. **Refer to: Engine Control Module (3.1.13 Electronic Control System - ME7, Removal and Installation).** **N** Inspect and repair the ECM ground circuit.

machinesoft.com 0912014625

Normal Start, Unstable Idling or Flameout With Partial Load (Such as Open the A/C) Diagnosis

Test Conditions	Details/Results/Actions
1. Inspect the trouble code	
	A. Connect the diagnostic tool B. Turn the ignition switch to position "ON", diagnose the engine system. Is there any DTC? **Y** Go to trouble code diagnosis procedure. **Refer to: DTC Diagnostic Procedure Index (3.1.13 Electrical Control System-ME7,DTC Diagnosis and Testing).** **N** Go to step 2.
2. Inspect the throttle	
	A. Turn the ignition switch to position "LOCK". B. Inspect the throttle for stuck. C. Inspect the throttle for carbon deposition. Is the throttle normal? **Y** Go to step 3. **N** Clean or replace the throttle.
3. Inspect if the engine output power increased when A/C on	
	A. Turn the ignition switch to "LOCK" position. B. Connect the diagnostic tool. C. Start the engine, access to the engine data stream menu, select the spark advance angle, fuel injection pulse width and the intake pressure sensor parameters. D. Open the air - conditioning, observe the change of data stream parameters. Does the data stream change? **Y** Go to step 4. **N** Inspect the A/C system. **Refer to: Insufficient Cooling Diagnosis (4.1.1 Heating, Ventilation and Air Conditioning, Symptom Diagnosis and Testing).**

mashinesoft.com 09120142258

Test Conditions	Details/Results/Actions
4. Inspect the engine module A/C on signal	
	A. Turn the ignition switch to "ON" position. B. Measure the level signal of connecting wire of terminal 75 of engine control module wiring harness connector E01 with a multimeter, while A/C is on. When A/C is turned on, whether the voltage of terminal 75 of E01 is 0 V ? **Y** Go to step 5. **N** Repair the circuit.
5. Inspect the fuel injector	
	A. Remove the fuel injector. B. Use fuel Injector dedicated cleaning analyzer inspects the fuel injector for leakage, blockages or the phenomenon of flow out of tolerance. Is the fuel injector normal? **Y** Go to step 6. **N** Replace the fuel injector. **Refer to: Fuel Injector (3.1.13 Electronic Control System - ME7, Removal and Installation).**
6. Inspect the ECM power supply circuit	
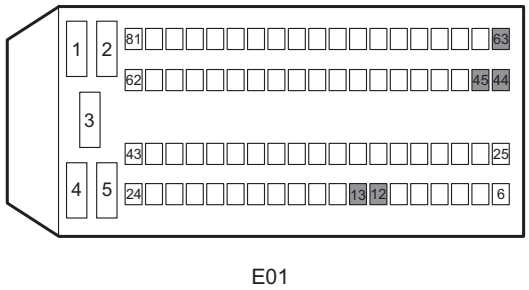 E01 A3113031	A.Turn the ignition switch to position "LOCK". B.Measure from the back of ECM wiring harness connector E01. C.Turn the ignition switch to "ON" position and use a multimeter to measure the voltage between the terminals 12, 13, 44, 45 and 63 of the ECM wiring harness connector E01 and the power supply. **Standard Voltage Value: 11 ~ 14 V** Is the voltage normal？ **Y** Go to step 7. **N** Repair and inspect the ECM power supply circuit.

mashinesoft.com 09120146259

Test Conditions	Details/Results/Actions
7. Inspect the ECM ground circuit	
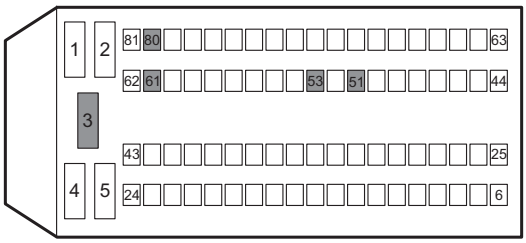 E01 A3113032	A. Turn the ignition switch to position "LOCK". B. Measure from the back of ECM wiring harness connector E01. C. Measure with a multimeter the resistance between the ECM wiring harness connector E01 terminal 3, 51, 53, 61 and 80 and the reliable grounding. **Standard Resistance Value: less than 5 Ω** Is the resistance value normal? **Y** Replace the engine control module. **Refer to: Engine Control Module (3.1.13 Electronic Control System - ME7, Removal and Installation).** **N** Inspect and repair the ECM ground circuit.

Normal Start, Idling is Too High Diagnosis

Test Conditions	Details/Results/Actions
1. Inspect the trouble code	
	A. Connect the diagnostic tool B. Turn the ignition switch to position "ON", diagnose the engine system. Is there any DTC? **Y** Go to trouble code diagnosis procedure. **Refer to: DTC Diagnosis procedure Index (3.1.13 Engine Electrical control System - ME7, DTC Diagnosis and Testing).** **N** Go to step 2.
2. Inspect whether the accelerator pedal is stuck or too tight	
	A. Turn the ignition switch to position "LOCK". B. Inspect if the accelerator pedal is stuck or too tight. Is the accelerator pedal stuck or too tight? **Y** Repair or replace the accelerator pedal. **N** Go to step 3.

mashinesoft.com 09120146259

Test Conditions	Details/Results/Actions
3. Inspect the vacuum pipeline	
	A. Inspect the air intake system for leakage. **Refer to: Air Intake System For Leakage Diagnosis (3.1.5 Intake System, General Procedures).** Does the air intake system leak? **Y** Repair the air intake system. **N** Go to step 4.
4. Inspect the water temperature sensor	
	A. Replace the water temperature sensor with a new one. B. Start engine, observe the engine. Is the engine idle speed too high? **Y** Go to step 5. **N** Replace the water temperature sensor.
5. Inspect the water temperature sensor signal circuit	
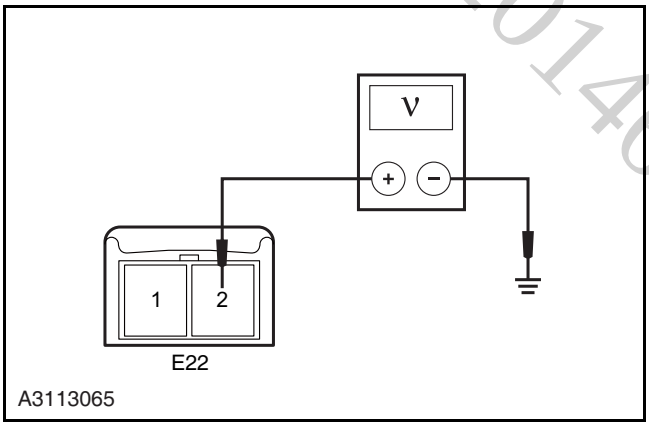	A. Turn the ignition switch to position "LOCK". B. Disconnect the water temperature sensor wiring harness connector E22. Turn the ignition switch to position "ON". C. Measure the voltage between terminal 2 of water temperature sensor wiring connector E22 and the reliable grounding. **Standard Voltage Value: 4.7 ~ 5.5 V** Is the voltage normal? **Y** Go to step 6. **N** Repair the fault circuit between terminal 2 of water temperature sensor wiring harness connector E22 and terminal 39 of ECM wiring harness connector E01.

mashinesoft.com 09120146299

Test Conditions	Details/Results/Actions
6. Inspect the water temperature sensor ground circuit	
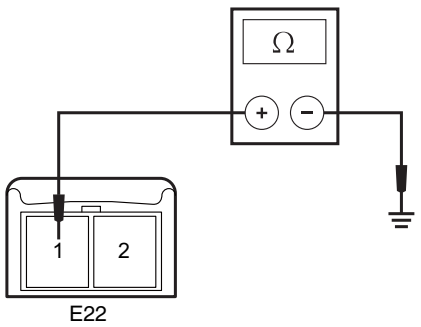 A3113066	A. Turn the ignition switch to "LOCK" position. B. Disconnect the water temperature sensor wiring harness connector E22 and measure the resistance value between terminal 1 of the water temperature sensor wiring harness connector E22 and reliable grounding. **Standard Resistance Value: 10 MΩ or more** C. Turn the ignition switch to position "ON". D. Measure the resistance value between terminal 1 of water temperature sensor connector E22 and the reliable grounding. **Standard Resistance Value: less than 5Ω** Is the resistance value normal? **Y** Go to step 7. **N** Repair the fault circuit between terminal 1 of water temperature sensor wiring harness connector E22 and terminal 17 of ECM wiring harness connector E01.
7. Inspect the ignition timing	
	A. Inspect the ignition timing. **Refer to: Ignition Timing Inspection (3.1.2 Mechanical System, General Procedures).** Is the ignition timing normal? **Y** Go to step 8. **N** Adjust the ignition timing.
8. Inspect the ECM power supply circuit	
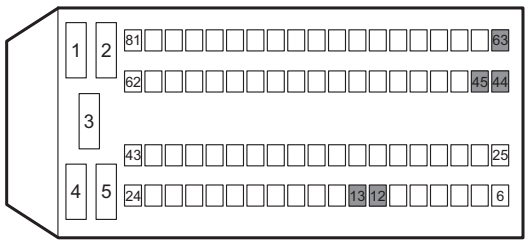 A3113031	A. Turn the ignition switch to "LOCK" position. B. Measure from the back of ECM wiring harness connector E01. C. Turn the ignition switch to "ON" position and use a multimeter to measure the voltage between the terminals 12, 13, 44, 45 and 63 of the ECM wiring harness connector E01 and the power supply. **Standard Voltage Value: 11 ~ 14 V** Is the voltage normal? **Y** Go to step 9. **N** Repair and inspect the ECM power supply circuit.

mashinesoft.com 09120146259

Test Conditions	Details/Results/Actions
9. Inspect the ECM ground circuit	
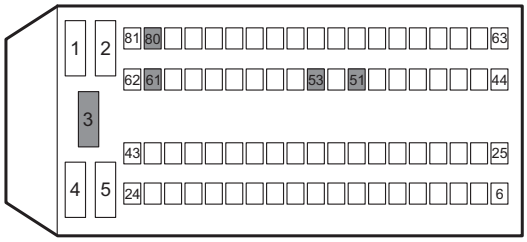 E01 A3113032	A. Turn the ignition switch to position "LOCK". B. Measure from the back of ECM wiring harness connector E01. C. Measure with a multimeter the resistance between the ECM wiring harness connector E01 terminal 3, 51, 53, 61 and 80 and the reliable grounding. **Standard Resistance Value: less than 5 Ω** Is the resistance value normal? **Y** Replace the engine control module. **Refer to: Engine Control Module (3.1.13 Electronic Control System - ME7, Removal and Installation).** **N** Inspect and repair the ECM ground circuit.

mashinesoft.com 09120146259

Acceleration Fault Diagnosis

Test Conditions	Details/Results/Actions
1. Inspect the trouble code	
	A. Connect the diagnostic tool. B. Turn the ignition switch to position "ON", diagnose the engine system. Is there any DTC? **Y** Go to trouble code diagnosis procedure. **Refer to: DTC Diagnostic Procedure Index (3.1.13 Electrical Control System - ME7, DTC Diagnosis and Testing).** **N** Go to step 2.
2. Inspect the air intake system	
	A. Turn the ignition switch to position "LOCK". B. Inspect the air intake system for block. **Refer to: Symptom Chart (3.1.5 Intake System, Symptom Diagnosis and Testing).** C. Inspect the air intake system for leakage. **Refer to: Air Intake Leakage Inspection (3.1.5 Intake System, General Procedures).** Is the air intake system normal? **Y** Go to step 3. **N** Repair the air intake system.
3. Inspect the throttle	
	A. Turn the ignition switch to position "LOCK". B. Inspect the throttle for stuck. C. Inspect the throttle for carbon deposition. Is the throttle normal? **Y** Go to step 4. **N** Clean or replace the throttle.

mashinesoft.com 09120146259

Test Conditions	Details/Results/Actions
4. Inspect the spark plug	
	A. Remove the spark plug. B. Inspect the spark plug in each cylinder and whether the model and clearance meet the standard. **Refer to: Spark Plug Test (3.1.8 Ignition System, General Procedures).** Is the spark plug in each cylinder normal? **Y** Go to step 5. **N** Replace the spark plug.
5. Inspect the fuel injector	
	A. Remove the fuel injector. B. Use fuel Injector dedicated cleaning analyzer inspects the fuel injector for leakage, blockages or the phenomenon of flow out of tolerance. Is the fuel injector normal? **Y** Go to step 6. **N** Replace the fuel injector.
6. Inspect the fuel	
	Is the fault caused by just refueling? **Y** Replace fuel. **N** Go to step 7.
7. Inspect the air intake pressure sensor and the throttle position sensor	
	A. Turn the ignition switch to position "LOCK". B. Connect the diagnostic tool. C. Start the engine and inspect the data stream of the air intake pressure sensor and the throttle position sensor. Is the data stream of the air intake pressure sensor and throttle sensor normal? **Y** Go to step 8. **N** Replace the air intake pressure sensor and throttle sensor or repair sensor circuit.

mashinesoft.com 09120146259

Test Conditions	Details/Results/Actions
8. Inspect the ignition timing	
	A. Inspect the ignition sequence. B. Inspect the ignition timing. **Refer to: Timing Inspection (3.1.2 Mechanical System, General Procedures).** Are the ignition sequence and ignition timing normal? **Y** Go to step 9. **N** Adjust the ignition timing.
9. Inspect the exhaust back pressure	
	A. Inspect exhaust back pressure. **Refer to: Exhaust Back Pressure Testing (3.1.6 Exhaust System, General Procedures).** Is the exhaust backpressure normal? **Y** Go to step 10. **N** Repair the exhaust system.
10. Inspect the ECM power supply circuit	
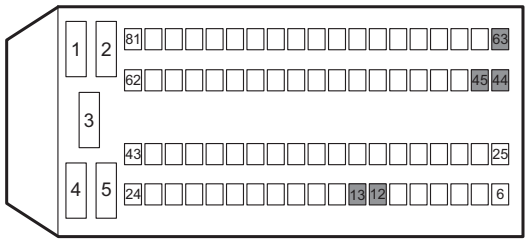 E01 A3113031	A. Turn the ignition switch to position "LOCK". B. Measure from the back of ECM wiring harness connector E01. C. Turn the ignition switch to "ON" position and use a multimeter to measure the voltage between the terminals 12, 13, 44, 45 and 63 of the ECM wiring harness connector E01 and the power supply. **Standard Voltage Value: 11 ~ 14 V** Is the voltage normal? **Y** Go to step 11. **N** Repair and inspect the ECM power supply circuit.

mashinesoft.com 09120146149

Test Conditions	Details/Results/Actions
11. Inspect the ECM ground circuit	
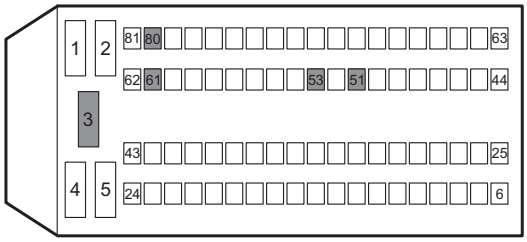 E01 A3113032	A. Turn the ignition switch to position "LOCK". B. Measure from the back of ECM wiring harness connector E01. C. Measure with a multimeter the resistance between the ECM wiring harness connector E01 terminal 3, 51, 53, 61 and 80 and the reliable grounding. **Standard Resistance Value: less than 5 Ω** Is the resistance value normal? **Y** Replace the engine control module. **Refer to: Engine Control Module (3.1.13 Electronic Control System - ME7, Removal and Installation).** **N** Inspect and repair the ECM ground circuit.

mashinesoft.com 09120146259

Engine Unstable Running Diagnosis

Test Conditions	Details/Results/Actions
1. Inspect the trouble code	
	A. Connect the diagnostic tool. B. Turn the ignition switch to position "ON", diagnose the engine system. Is there any DTC? **Y** Go to trouble code diagnosis procedure. **Refer to: DTC Diagnostic Procedure Index (3.1.13 Electrical Control System - ME7, DTC Diagnosis and Testing).** **N** Go to step 2.
2. Inspect the air intake system	
	A. Turn the ignition switch to position "LOCK". B. Inspect the air intake system for block. **Refer to: Symptom Chart (3.1.5 Intake System, Symptom Diagnosis and Testing).** C. Inspect the air intake system for leakage. **Refer to: Air Intake System Leakage Diagnosis Procedures (3.1.5 Intake System, Symptom Diagnosis and Testing).** Is the air intake system normal? **Y** Go to step 3 **N** Repair the air intake system.
3. Inspect the oxygen sensor	
	A. Connect the diagnostic tool. B. Turn the ignition switch to position "ON", operate diagnostic tool to access to the engine data stream and read "pre - catalytict oxygen sensor pressure and post - catalytict oxygen sensor pressure". Is the data stream normal? **Y** Go to step 4. **N** Repair or replace the pre - catalytic oxygen sensor and the circuit.

mashinesoft.com 09120146259

Test Conditions	Details/Results/Actions
4. Inspect the spark plug	
	A. Remove the spark plug. B. Inspect the spark plug in each cylinder and whether the model and clearance meet the standard. **Refer to: Spark Plug Test (3.1.8 Ignition System, General Procedures).** Is the spark plug in each cylinder normal? **Y** Go to step 5. **N** Replace the spark plug.
5. Inspect the fuel injector	
	A. Remove fuel injector. B. Inspect the fuel injector for leakage, block or the phenomenon of flow out of tolerance. Is the fuel injector normal? **Y** Go to step 6. **N** Replace the fuel injector.
6. Inspect the fuel pressure	
	A. Turn the ignition switch to position "LOCK". B. Measure the fuel pressure. **Refer to: Fuel System Pressure Test (3.1.7 Fuel System, General Procedures).** Is the fuel pressure normal? **Y** Go to step 7. **N** Inspect the fuel system. **Refer to: Fuel Pump Away From Work Diagnosis (3.1.7 Fuel System, Symptom Diagnosis and Testing).**

mashinesoft.com 09120146259

Test Conditions	Details/Results/Actions
7. Inspect the air intake pressure sensor and the throttle position sensor	
	A. Turn the ignition switch to position "LOCK". B. Connect the diagnostic tool. C. Start the engine and inspect the data stream of the air intake pressure sensor and the throttle position sensor. Is the data stream of the air intake pressure sensor and throttle sensor normal? **Y** Go to step 8. **N** Replace air intake pressure sensor and throttle sensor or repair sensor circuit.
8. Inspect the ignition timing	
	A. Inspect the ignition sequence. B. Inspect the ignition timing. **Refer to: Timing Inspection (3.1.2 Mechanical System, General Procedures).** Are the ignition sequence and ignition timing normal? **Y** Go to step 9. **N** Adjust the ignition timing.
9. Inspect the engine support component	
	A. Inspect the engine support component. Are the engine suspension component cracked, damaged, bolts loose or lost? **Y** Repair the fault part. **N** Go to step 10.

mashinesoft.com 09120146259

Test Conditions	Details/Results/Actions
10. Inspect the ECM power supply circuit	
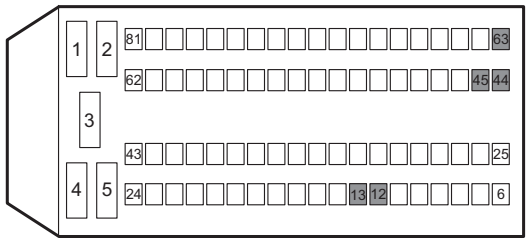 E01 A3113031	A. Turn the ignition switch to "LOCK" position. B. Measure from the back of ECM wiring harness connector E01. C. Turn the ignition switch to "ON" position and use a multimeter to measure the voltage between the terminals 12, 13, 44, 45, and 63 of the ECM wiring harness connector E01 and the power supply. **Standard Voltage Value: 11 ~ 14 V** Is the voltage normal? **Y** Go to step 11. **N** Repair and inspect the ECM power supply circuit.
11. Inspect the ECM ground circuit	
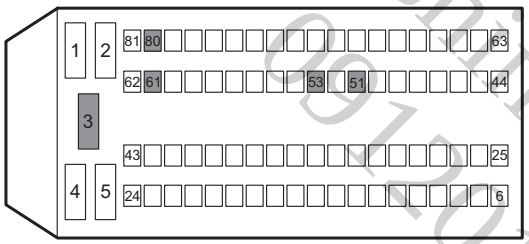 E01 A3113032	A. Turn the ignition switch to position "LOCK". B. Measure from the back of ECM wiring harness connector E01. C. Measure with a multimeter the resistance between the ECM wiring harness connector E01 terminal 3, 51, 53, 61 and 80 and the reliable grounding. **Standard Resistance Value: less than 5 Ω** Is the resistance value normal? **Y** Replace the engine control module. **Refer to: Engine Control Module (3.1.13 Electronic Control System - ME7, Removal and Installation).** **N** Inspect and repair the ECM ground circuit.

mashinesoft.com 09120146259

Easy Stall at Start Diagnosis

Test Conditions	Details/Results/Actions
1. Inspect the trouble code	
	A. Connect the diagnostic tool. B. Turn the ignition switch to position "ON", diagnose the engine system. Is there any DTC? **Y** Go to trouble code diagnosis procedure. **Refer to: DTC Diagnostic Procedure Index (3.1.13 Electrical Control System - M7, DTC Diagnosis and Testing).** **N** Go to step 2.
2. Air Intake system	
	A. Turn the ignition switch to "LOCK" position. B. Inspect the air intake system for block. **Refer to: Symptom Chart (3.1.5 Intake System, Symptom Diagnosis and Testing).** C. Inspect the air intake system for leakage. **Refer to: Air Intake System Leakage Diagnosis (3.1.5 Intake System, Symptom Diagnosis and Testing).** Is the air intake system normal? **Y** Go to step 3. **N** Repair the air intake system.
3. Crankshaft position sensor	
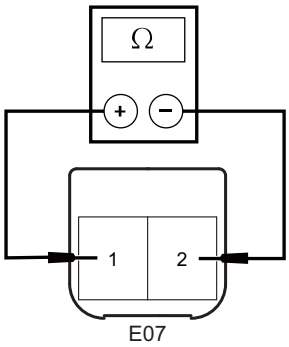 A3113033	A. Turn the ignition switch to position "LOCK". B. Disconnect the crankshaft position sensor wiring harness connector E07. C. Measure the resistance value of crankshaft position sensor. **Standard Resistance Value: 20 ℃ (68ºF)731 ~ 989 Ω** D. Connect crankshaft position sensor wiring harness connector E07. Is the resistance value normal? **Y** Go to step 4. **N** Replace the crankshaft position sensor. **Refer to: Crankshaft Position Sensor (3.1.13 Electrical Control System - ME7, Removal and Installation).**
4. Inspect the crankshaft position sensor terminal 1 circuit	

mashinesoft.com 09120146259

Test Conditions	Details/Results/Actions
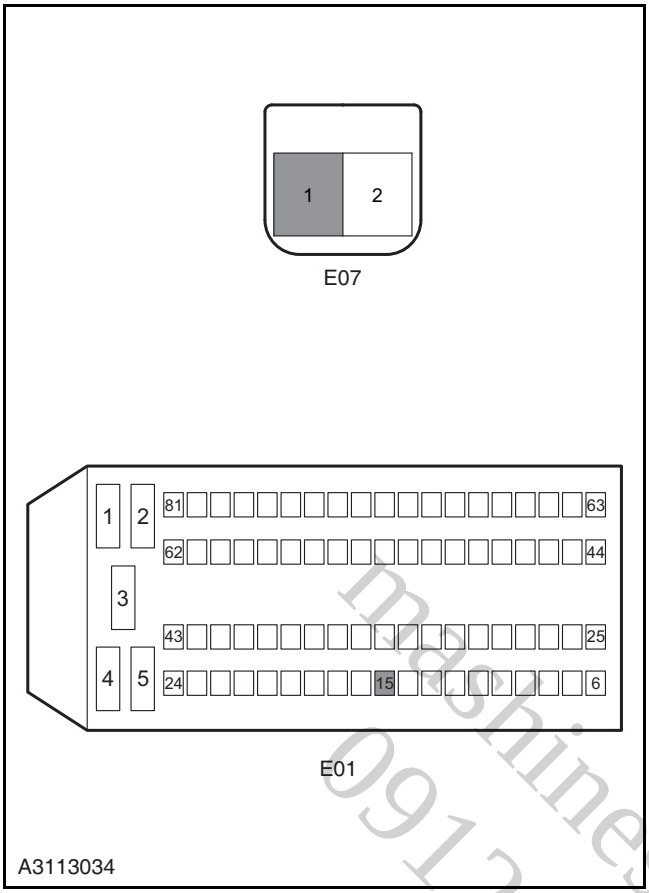	A. Turn the ignition switch to "LOCK" position. B. Disconnect the crankshaft position sensor wiring harness connector E07. C. Disconnect the ECM wiring harness connector E01. D. Measure the resistance value between the terminal 1 of crankshaft position sensor wiring harness connector E07 and the terminal 15 of ECM wiring harness connector E01. Inspect for open circuit. **Standard Resistance Value: less than 5Ω** E. Measure the resistance value between the terminal 1 of crankshaft position sensor wiring harness connector E07 and the reliable grounding. Inspect for short circuit to ground. **Standard Resistance Value: 10 MΩ or more** F. Measure the voltage between the terminal 1 of crankshaft position sensor wiring harness connector E07 and the reliable grounding. Inspect for short circuit to power supply. **Standard Voltage Value: 0 V** Is the circuit normal? **Y** Go to step 5. **N** Repair the circuit between the terminal 1 of crankshaft position sensor wiring harness connector E07 and the terminal 15 of engine control module wiring harness connector E01.
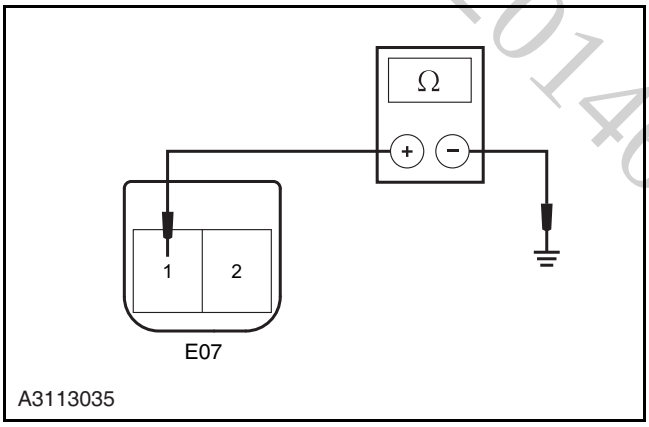	
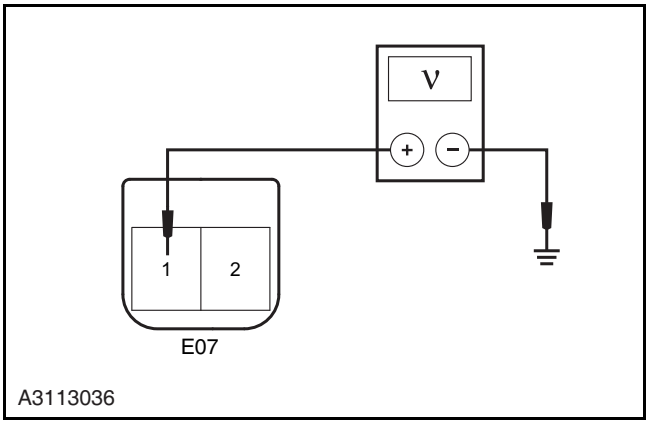	

machinesoft.com 09120146259

Test Conditions	Details/Results/Actions
5. Inspect the crankshaft position sensor terminal 2 circuit	
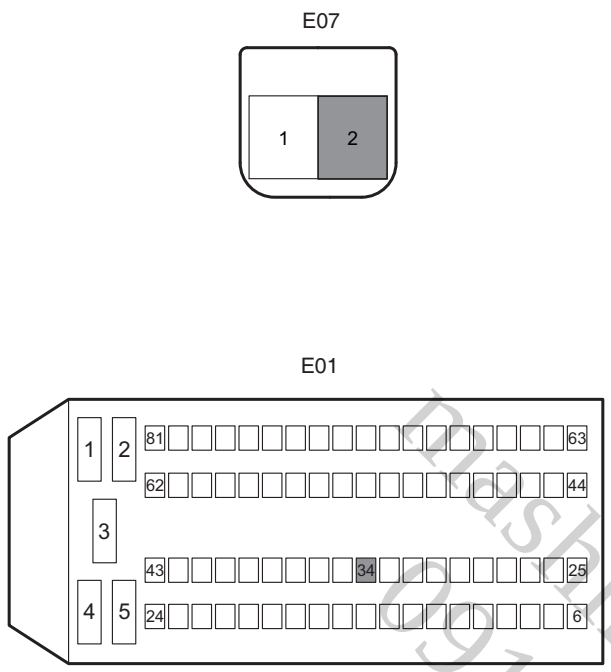 A3113163	A. Turn the ignition switch to position "LOCK". B. Disconnect the knock sensor wiring harness connector E07. C. Disconnect the ECM wiring harness connector E01. D. Measure the resistance value between the terminal 2 of crankshaft position sensor wiring harness connector E07 and the terminal 34 of ECM wiring harness connector E01. Inspect for open circuit. **Standard Resistance Value: less than 5Ω** E. Measure the resistance value between the terminal 2 of crankshaft position sensor wiring harness connector E07 and the reliable grounding. Inspect for short circuit to ground. **Standard Resistance Value: 10 MΩ or more** F. Measure the voltage between the terminal 2 of crankshaft position sensor wiring harness connector E07 and the reliable grounding. Inspect for short circuit to power supply. **Standard Voltage Value: 0 V** Is the circuit normal? **Y** Go to step 6. **N** Repair the circuit between the terminal 2 of crankshaft position sensor wiring harness connector E07 and the terminal 34 of engine control module wiring harness connector E01.
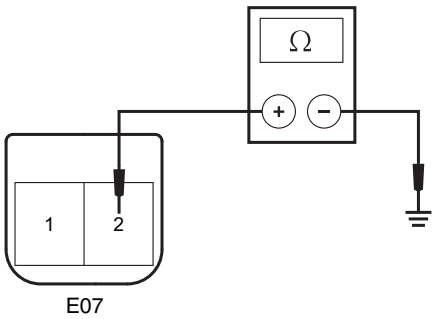 A3113038	

nashinesoft.com 09120146259

Test Conditions	Details/Results/Actions
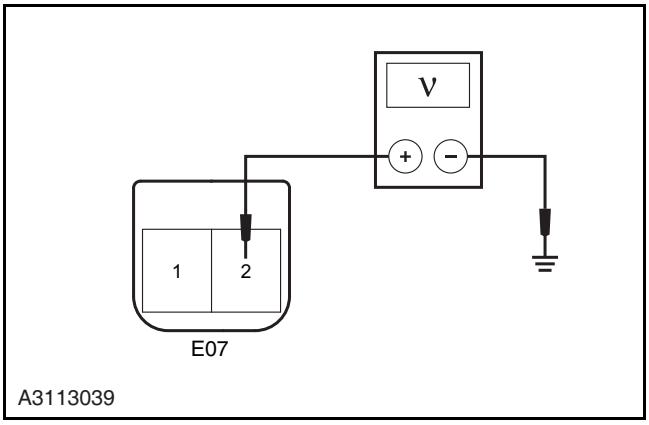	
6. Inspect the spark plug	
	A. Remove the spark plug. B. Inspect the spark plug in each cylinder and whether the model and clearance meet the standard. **Refer to: Spark Plug Test (3.1.8 Ignition System, General Procedures).** Is the spark plug in each cylinder normal? **Y** Go to step 7. **N** Replace the spark plug.
7. Inspect the fuel injector	
	A. Remove the fuel injector. B. Inspect the fuel injector for leakage, block or the phenomenon of flow out of tolerance. Is the fuel injector normal? **Y** Go to step 8. **N** Replace the fuel injector.

mashinesoft.com 09120146259

Test Conditions	Details/Results/Actions
8. Inspect the fuel pressure	
	A. Turn the ignition switch to position "LOCK". B. Measure the fuel pressure. **Refer to: Fuel System Pressure Test (3.1.7 Fuel System, General Procedures).** Is the fuel pressure normal? **Y** Go to step 9. **N** Inspect the fuel system. **Refer to: Fuel Pump Not Working Diagnosis (3.1.7 Fuel System, Symptom Diagnosis and Testing).**
9. Inspect the air intake pressure sensor and the throttle position sensor	
	A. Turn the ignition switch to position "LOCK". B. Connect the diagnostic tool. C. Start the engine and inspect the data stream of the air intake pressure sensor and the throttle position sensor. Is the data stream of the air intake pressure sensor and throttle sensor normal? **Y** Go to step 10. **N** Replace air intake pressure sensor and throttle sensor or repair sensor circuit.
10. Inspect the ignition timing	
	A. Inspect the ignition sequence. B. Inspect the ignition timing. **Refer to: Timing Inspection (3.1.2 Mechanical System, General Procedures).** Are the ignition sequence and ignition timing normal? **Y** Go to step 11. **N** Adjust the ignition timing.

mashinesoft.com 09120146259

Test Conditions	Details/Results/Actions
11. Inspect the ECM power supply circuit	
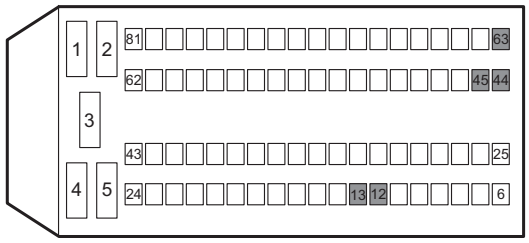 E01 A3113031	A. Turn the ignition switch to position "LOCK". B. Measure from the back of ECM wiring harness connector E01. C. Turn the ignition switch to "ON" position and use a multimeter to measure the voltage between the terminals 12, 13, 44, 45 and 63 of the ECM wiring harness connector E01 and the power supply. **Standard Voltage Value: 11 ~ 14 V** Is the voltage normal? **Y** Go to step 12. **N** Repair and inspect the ECM power supply circuit.
12. Inspect the ECM ground circuit	
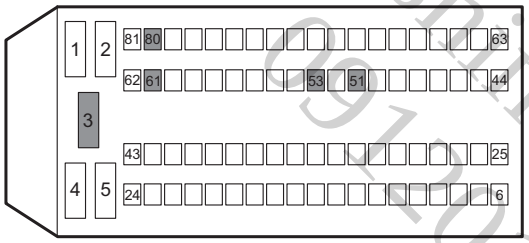 E01 A3113032	A. Turn the ignition switch to position "LOCK". B. Measure from the back of ECM wiring harness connector E01. C. Measure with a multimeter the resistance between the ECM wiring harness connector E01 terminal 3, 51, 53, 61 and 80 and the reliable grounding. **Standard Resistance Value: less than 5 Ω** Is the resistance value normal? **Y** Replace the engine control module. **Refer to: Engine Control Module (3.1.13 Electronic Control System - ME7, Removal and Installation).** **N** Inspect and repair the ECM ground circuit.

machinesoft.com 09120146259

Emergency Occurs During Vehicle Driving Diagnosis

Test Conditions	Details/Results/Actions
1. General Procedures	
	A. Inspect the following items. • Vacuum pipeline connection • Air cleaner element • Air intake system no leakage • Air intake system no limitation • The intake manifold and the components installed on the intake manifold are correctly sealed. • Ignition circuit • Proper quality of fuel (Such as proper octane value, impurity, winter / summer mixture) • Electrical connection • Stable operation of throttle Is it normal? **Y** Go to step 2. **N** Repair the fault part.
2. Inspect the trouble code	
	A. Connect the diagnostic tool. B. Turn the ignition switch to position "ON", diagnose the engine system. Is there any DTC? **Y** Repair and inspect DTC malfunction. **Refer to: DTC Diagnostic Procedure Index (3.1.13 Electrical Control System - M7, DTC Diagnosis and Testing).** **N** Go to step 3.

mashinesoft.com 09120140059

Test Conditions	Details/Results/Actions
3. Inspect the data stream	
	A. Connect the diagnostic tool. B. Use diagnostic inspect the following data stream of the engine: • Engine speed • Actual air intake manifold pressure • Throttle potentiometer 1 voltage • Throttle potentiometer 2 voltage • Knock sensor signal 1 • Knock sensor signal 2 Is the data stream changes normally in the required range? **Y** Go to step 4. **N** Repair the corresponding data stream fault.
4. Inspect the crankshaft position sensor and camshaft position sensor signals wheel	
	A. Turn the ignition switch to position "LOCK". B. Visually inspect the crankshaft position sensor and camshaft position sensor signals wheel. Is the signal wheel normal? **Y** Go to step 5. **N** Replace the signal wheel.
5. Inspect the spark plug	
	A. Remove the spark plug. B. Inspect the spark plug in each cylinder and whether the model and clearance meet the standard. **Refer to: Spark Plug Test (3.1.8 Ignition System, General Procedures).** Is the spark plug in each cylinder normal? **Y** Go to step 6. **N** Replace the spark plug.

mashinesoft.com 09120146259

Test Conditions	Details/Results/Actions
6. Inspect the fuel injector	
	A. Remove the fuel injector. B. Inspect the fuel injector for leakage, block or the phenomenon of flow out of tolerance. Is the fuel injector normal? **Y** Go to step 7. **N** Replace the fuel injector. **Refer to: Fuel Injector (3.1.13 Electronic Control System - ME7, Removal and Installation).**
7. Inspect the fuel pressure	
	A. Turn the ignition switch to position "LOCK". B. Measure the fuel pressure. **Refer to: Fuel System Pressure Test (3.1.7 Fuel System, General Procedures).** Is the fuel pressure normal? **Y** Go to step 8. **N** Inspect the fuel system. **Refer to: Fuel Pump Away From Work Diagnosis (3.1.7 Fuel System, Symptom Diagnosis and Testing).**
8. Inspect the ignition timing	
	A. Inspect the ignition sequence. B. Inspect the ignition timing. **Refer to: Timing Inspection (3.1.2 Mechanical System, General Procedures).** Are the ignition sequence and ignition timing normal? **Y** Go to step 9. **N** Adjust the ignition timing.

mashinesoft.com 09120146250

Test Conditions	Details/Results/Actions
9. Inspect the carbon canister system	
	A. Inspect the carbon canister system. **Refer to: Carbon Canister Inspection (3.1.11 Exhaust Control System, General Procedures).** Is the carbon canister system normal? **Y** Go to step 10. **N** Repair the carbon canister system.
10. Inspect the exhaust back pressure	
	A.Inspect the exhaust back pressure. **Refer to: Exhaust Back Pressure Testing (3.1.6 Exhaust System, General Procedures).** Is the exhaust back pressure normal? **Y** Go to step 11. **N** Repair the exhausts system.
11. Inspect the ECM power supply circuit	
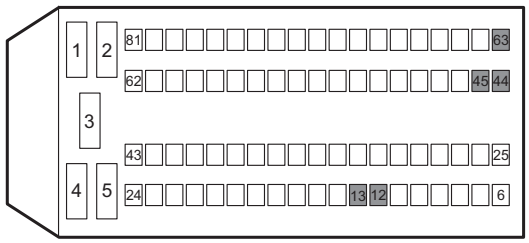 E01 A3113031	A. Turn the ignition switch to "LOCK" position. B. Measure from the back of ECM wiring harness connector E01. C. Turn the ignition switch to "ON" position and use a multimeter to measure the voltage between the terminals 12, 13, 44, 45 and 63 of the ECM wiring harness connector E01 and the power supply. **Standard Voltage Value: 11 ~ 14 V** Is the voltage normal? **Y** Go to step 12. **N** Repair and inspect the ECM power supply circuit.

mashinesoft.com 09120146258

Test Conditions	Details/Results/Actions
12. Inspect the ECM ground circuit	
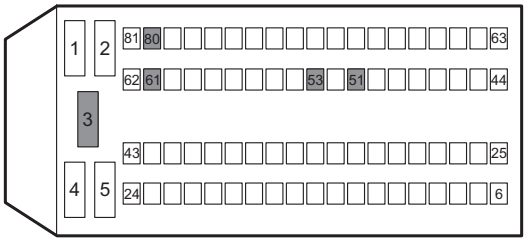 E01 A3113032	A. Turn the ignition switch to position "LOCK". B. Measure from the back of ECM wiring harness connector E01. C. Measure with a multimeter the resistance between the ECM wiring harness connector E01 terminal 3, 51, 53, 61 and 80 and the reliable grounding. **Standard Resistance Value: less than 5 Ω** Is the resistance value normal? **Y** Replace the engine control module. **Refer to: Engine Control Module (3.1.13 Electronic Control System - ME7, Removal and Installation).** **N** Inspect and repair the ECM ground circuit.

mashinesoft.com 09120146259

Stall During Coasting Diagnosis

Test Conditions	Details/Results/Actions
1. General inspection	
	A. Inspect vacuum hose correctly positioned and with no damage B. Inspect the intake system for no leakage. Is the inspect normal? **Y** Go to step 2. **N** Repair the fault part.
2. Engine idle speed	
	A. Inspect the engine idle speed. Is the engine idle stable? **Y** Carry out the unstable idle speed diagnosis. **Refer to: Normal Start, Unstable Idling or Stall With Partial Load Diagnosis (3.1.13 Electronic Control System - ME7, Symptom Diagnosis and Testing).** **N** Go to step 3.

Test Conditions	Details/Results/Actions
3. Inspect the AC compressors and the electrical fans close	
	A. Turn the ignition switch to position "LOCK". B. Disconnect the A/C compressor solenoid clutch. C. Whether the A/C system inspecting is normal. D. Restore the solenoid clutch connector. Is the system normal after disconnecting the solenoid clutch and fan wiring harness connector? **Y** Repair the fault of solenoid clutch doesn't switch off. **N** Go to step 4.
4. Inspect the trouble code	
	A. Connect the diagnostic tool. B. Turn the ignition switch to position "ON", diagnose the engine system. Is there any fault? **Y** Go to trouble code diagnosis procedure. **Refer to: DTC Diagnostic Procedure Index (3.1.13 Electrical Control System - ME7, DTC Diagnosis and Testing).** **N** Go to step 5.
5. Inspect the spark plug	
	A. Remove the spark plug. B. Inspect the spark plug in each cylinder and whether the model and clearance meet the standard, **Refer to: Spark Plug Test (3.1.8 Ignition System, General Procedures).** Is the spark plug in each cylinder normal? **Y** Go to step 6. **N** Replace the spark plug.

mashinesoft.com 09120146259

Test Conditions	Details/Results/Actions
6. Inspect the fuel injector	
	A. Remove fuel injector. B. Inspect the fuel injector for leakage, block or the phenomenon of flow out of tolerance. Is the fuel injector normal? **Y** Go to step 7. **N** Replace or clean the fuel injector. **Refer to: Fuel Injector (3.1.13 Electronic Control System - ME7, Removal and Installation).**
7. Inspect thefuel	
	Is the fault caused by just refueling? **Y** Replace the fuel. **N** Go to step 8.
8. Inspect the air intake pressure sensor and the throttle position sensor	
	A. Turn the ignition switch to position "LOCK". B. Connect the diagnostic tool. C. Start the engine and inspect the data stream of the air intake pressure sensor and the throttle position sensor. Is the data stream of the air intake pressure sensor and throttle sensor normal? **Y** Go to step 9. **N** Replace air intake pressure sensor and throttle sensor or repair sensor circuit.
9. Inspect the ignition timing	
	A. Inspect the ignition sequence. B. Inspect the ignition timing. **Refer to: Timing Inspection (3.1.2 Mechanical System, General Procedures).** Are the ignition sequence and ignition timing norma?？ **Y** Go to step 10. **N** Adjust the ignition timing.

mashinesoft.com 09120140259

Test Conditions	Details/Results/Actions
10. Inspect the exhaust back pressure	
	A. Inspect the exhaust back pressure. **Refer to: Exhaust Back Pressure Inspection (3.1.6 Exhaust System, General Procedures).** Is the exhaust back pressure normal? **Y** Go to step 11. **N** Repair exhausts system.
11. Inspect the ECM power supply circuit	
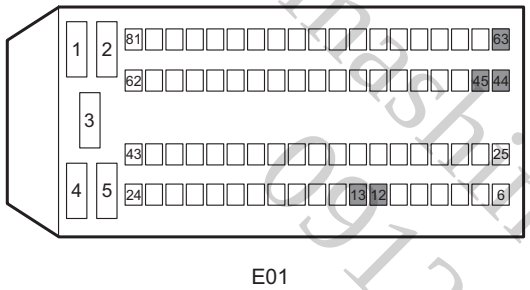 E01 A3113031	A. Turn the ignition switch to position "LOCK". B. Measure from the back of ECM wiring harness connector E01. C. Turn the ignition switch to "ON" position and use a multimeter to measure the voltage between the terminals 12, 13, 44, 45 and 63 of the ECM wiring harness connector E01 and the power supply. **Standard Voltage Value: 11 ~ 14 V** Is the voltage normal? **Y** Go to step 12. **N** Repair and inspect the ECM power supply circuit.
12. Inspect the ECM ground circuit	
 E01 A3113032	A. Turn the ignition switch to position "LOCK". B. Measure from the back of ECM wiring harness connector E01. C. Measure with a multimeter the resistance between the ECM wiring harness connector E01 terminal 3, 51, 53, 61 and 80 and the reliable grounding. **Standard Resistance Value: less than 5 Ω** Is the resistance value normal? **Y** Replace the engine control module. **Refer to: Engine Control Module (3.1.13 Electronic Control System - ME7, Removal and Installation).** **N** Inspect and repair the ECM ground circuit.

mashinesoft.com 0912014625

MIL Indicator Fault Diagnosis

Test Conditions	Details/Results/Actions
1. Inspect the instrument for other indicator state	
	A. Turn the ignition switch to position "ON". B. Inspect the state of all the instrument warning lamps. Is there any other warning light is abnormal on besides MIL fault indicator? **Y** Go to step 2. **N** Go to step 4.
2.Inspect the instrument power supply circuit	
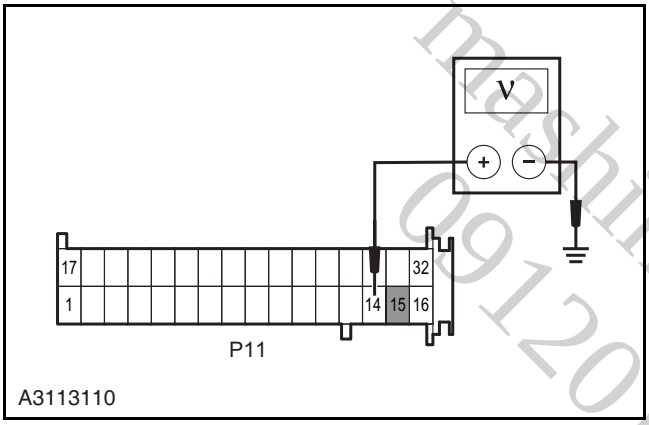	A. Turn ignition switch to "ON " position, with a multimeter inspect the power supply circuit of instrument cluster harness connector P07 terminal 4 and 15. **Standard Voltage Value: 11 ~ 14 V** Is the voltage normal? **Y** Go to step 3. **N** Repair the instrument cluster power supply circuit.
3. Inspect the ground circuit of the instruments	
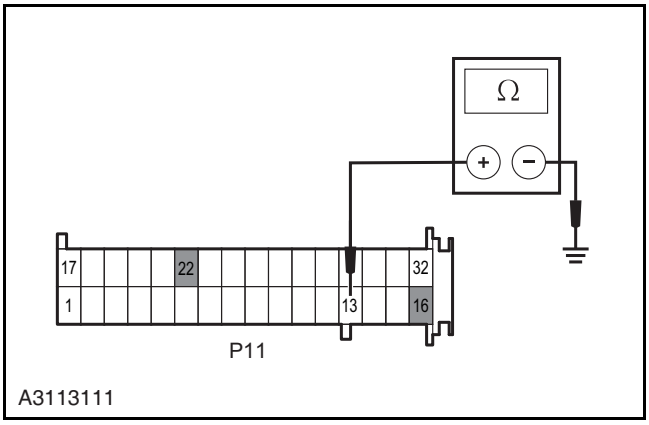	A. Turn ignition switch to "LOCK" position, use a multimeter to inspect ground circuit of the terminal 13, 16 and 22 of the instrument cluster harness wiring connector P11. **Standard Resistance Value: less than 5 Ω** Is the resistance value normal? **Y** Go to step 4. **N** Repair the instrument cluster ground circuit.

machinesoft.com 09120146119

Test Conditions	Details/Results/Actions
4. Inspect the instrument performance	
	A. Turn the ignition switch to position "LOCK". B. Disconnect the battery cathode wiring harness for over 90s. C. Disconnect the ECM wiring harness connector E01. D. Connect the battery negative cable. E. Get the terminal 15 of E01 short circuit, observe if the engine fault indicator is on . **Y** Go to step 5. **N** Replace the instrument. **Refer to: Instrument (4.3.2 Instrument, Removal and Installation).**
5. Inspect the CAN network circuit	
	A. Inspect and repair the CAN bus. **Refer to: CAN Bus Integrity Inspection (4.3.15 On-board Network System, Description and Operation).** Is the network normal? **Y** Go to step 6. **N** Inspect and repair the network circuit and replace it as necessary.
6. Inspect the ECM power supply circuit	
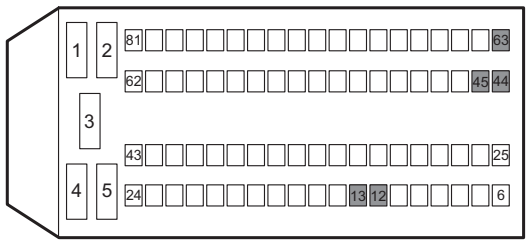 E01 A3113031	A. Turn the ignition switch to position "LOCK". B. Measure from the back of ECM wiring harness connector E01. C. Turn the ignition switch to "ON" position and use a multimeter to measure the voltage between the terminals 12, 13, 44, 45 and 63 of the ECM wiring harness connector E01 and the power supply. **Standard Voltage Value: 11 ~ 14 V** Is the voltage normal? **Y** Go to step 7. **N** Repair and inspect the ECM power supply circuit.

mashinesoft.com 09120146259

Test Conditions	Details/Results/Actions
7. Inspect the ECM ground circuit	
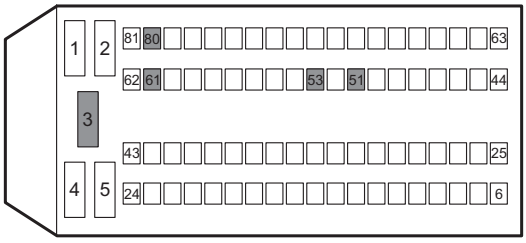 E01 A3113032	A. Turn the ignition switch to position "LOCK". B. Measure from the back of ECM wiring harness connector E01. C. Measure with a multimeter the resistance between the ECM wiring harness connector E01 terminal 3, 51, 53, 61 and 80 and the reliable grounding. **Standard Resistance Value: less than 5 Ω** Is the resistance value normal? **Y** Replace the engine control module. **Refer to: Engine Control Module (3.1.13 Electronic Control System - ME7, Removal and Installation).** **N** Inspect and repair the ECM ground circuit.

mashinesoft.com 09120146259

DTC Diagnosis and Testing

Control Module Terminal List

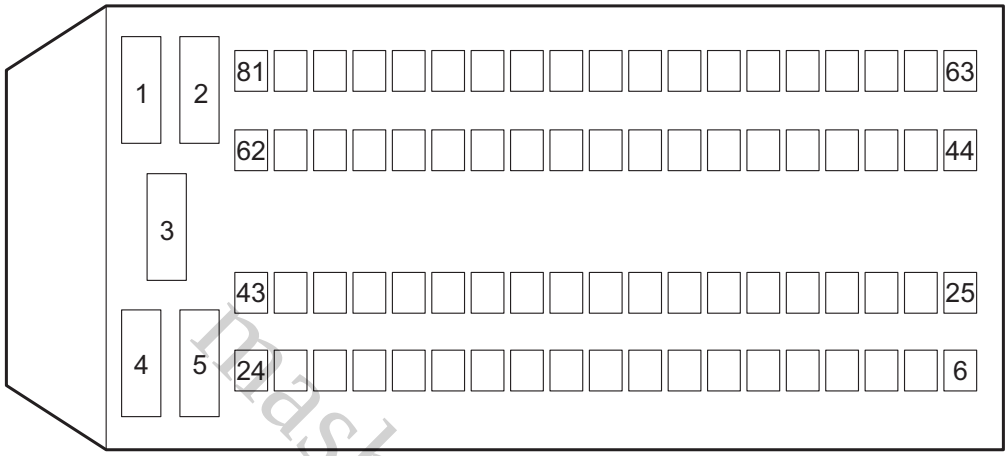

E01

A3113040

Mashinesoft.com 09120146258

Terminal No.	Wire Diameter/Color	Terminal Definition	Remark
1	-	-	-
2	0.75 LG/WH	Control signal of the ignition coil 2	MT
2	0.85 RD/BU	Control signal of the ignition coil 2	AT
3	2.0 BK	G1002	Grounding wire
4	-	-	-
5	0.75 PK/BU	Control signal of the ignition coil 1	MT
5	0.85 PK/YE	Control signal of the ignition coil 1	AT
6	0.5 WH/YE	Fuel injector 2	-
7	0.5 GY	Fuel injector 3	-
8	-	-	-
9	-	-	-
10	-	-	-
11	-	-	-
12	0.5 RD/WH	Continuous power supply	-

Terminal No.	Wire Diameter/Color	Terminal Definition	Remark
13	0.5 WH/RD	Ignition switch (IG1)	-
14	0.5 BK/WH	Main relay control signal	-
15	0.5 GY/BU	Crankshaft position sensor A	-
16	0.5 BN	Accelerator pedal position sensor 1	-
17	0.5 BU/RD	Sensor grounding 1	-
18	0.85 YE/GN	Pre - catalytic oxygen sensor signal	-
19	0.5 GY/RD	Knock sensor A	-
20	0.5 GY/GN	Knock sensor B	-
21	0.5 BN/YE	Brake lamp signal	-
22	-	-	-
23	-	-	-
24	-	-	-
25	0.5 BU/BK	Post - catalytic oxygen sensor heating control signal	-
26	0.85 WH/VT	Pre - catalytic oxygen sensor heating control signal	-
27	0.5 OG/BN	Fuel Injector 1	-
28	0.5 BU/YE	OCV exhaust vale control signal	-
29	-	-	-
30	-	-	-
31	-	-	-
32	0.5 BN/BK	5V power supply 2	-
33	0.5 YE/OG	5V power supply 1	-
34	0.5 GY/VT	Crankshaft position sensor B	-
35	0.5 RD/YE	Sensor grounding 3	-
36	0.5 YE/WH	Sensor grounding 2	-
37	0.5 YE/BU	Airflow signal	-
38	0.5 OG/WH	Electronic throttle position 2	-
39	0.5 RD/BK	Engine coolant temperature signal	-
40	0.5 BN/RD	Accelerator pedal position sensor 2	-
41	-	-	-
42	0.5 GY/YE	Air intake temperature signal	-
43	-	-	MT
43	0.5 GY	Cruise control switch signal	AT

mashinesoft.com 09120146259

Terminal No.	Wire Diameter/Color	Terminal Definition	Remark
44	0.85 BK/BU	Non continuous power (main relay control)	-
45	0.85 BK/BU	Non continuous power (main relay control)	-
46	0.5 GN	Canister solenoid valve control signal	-
47	0.5 PK/WH	Fuel Injector 4	-
48	0.5 BK/YE	OCV intake control signal	-
49	-	-	-
50	0.5 YE	Low speed fan relay control signal	-
51	0.5 BK	G1001	Grounding wire
52	-	-	-
53	0.5 BK	G1001	Grounding wire
54	0.5 GN/BK	Electronic throttle position 1	-
55	0.85 BK/GN	Post - catalytic oxygen sensor signal	-
56	-	-	-
57	-	-	-
58	0.5 BN/BU	Brake lamp switch signal	-
59	-	-	-
60	0.5 BU/GN	Tri - state pressure switch signal	-
61	0.5 BK	G1002	Grounding wire
62	0.3 LG/BK	CAN high	-
63	0.85 BK/BU	Non continuous power (main relay control)	-
64	0.5 PK/YE	Electrical throttle control	-
65	0.5 PK/YE	Electrical throttle control	-
66	0.5 RD/OG	Electrical throttle control	-
67	0.5 RD/OG	Electrical throttle control	-
68	0.5 VT/BU	High speed fan relay control signal	-
69	0.5 YE/BN	Compressor relay control signal	-
70	0.5 PK/BN	Fuel pump relay control signal	-
71	0.5 VT/YE	Diagnosis K line	-
72	0.5 OG/RD	Intake camshaft position sensor signal	-
73	0.5 BN/BK	Anti - theft device	-
74	0.5 BU/WH	Clutch top position switch signal input	MT
74	-	-	AT

mashinesoft.com 09120146259

Terminal No.	Wire Diameter/Color	Terminal Definition	Remark
75	0.5 BU/BN	Compressor temperature protection switch signal	-
76	0.5 OG	Air conditioning warm air electronic load signal	-
77	0.5 OG/BK	Crash oil cut - off signal	-
78	0.5 OG/BK	Electronic throttle position sensor grounding	-
79	0.5 GN/WH	Exhaust camshaft position sensor signal	-
80	0.5 BK	G1002	Grounding wire
81	0.3 LG	CAN low	-

Diagnostic Trouble Code (DTC) Type

Fault type	Definition
Type0	If the fault diagnosis type is 0, no lamp is on, and the system makes no diagnosis.
Type2	Diagnosis path for misfire related fault generally is defined as 2. For the misfire fault that will cause damage to catalytic converters, the MIL lamp will immediately flash to warn the driver. For the misfire that may cause the deterioration of emissions faults, if 3 consecutive driving cycles all fully detect the relative level of the fire, then the MIL lamp is on. The fault will be deleted after 40 continuous trouble - free warm - up cycles.
Type3	After 3 consecutive driving cycles all detected the failure, the MIL lamp is on. If three consecutive driving cycles detect that the fault has been repaired, the MIL lamp is off. The failure will be deleted after 40 continuous trouble - free warm - up cycles.
Type5	If 3 consecutive driving cycles all detected the failure, the failure is confirmed. No lamp is on. If three consecutive driving cycles detect that the fault has been repaired, the MIL lamp is off. The failure will be deleted after 40 continuous trouble - free warm - up cycles.
Type6	Once failure occurs and been confirmed, the failure will be deleted after 40 continuous trouble - free warm - up cycles. No lamp is on for the fault, and universal scan tool is unreadable.
Type 7	The external test tools can activate the fuel supply system fault diagnosis and are generally used only for offline testing or repair station. No lamp is on for the fault, and universal scan tool is unreadable.
Type 11	It is a special diagnostic path for fuel supply system. If three consecutive driving cycles detect the fault, the MIL lamp is on. If four consecutive driving cycles detect that the fault has been repaired, the MIL lamp is off. The fault will be deleted after 40 continuous trouble - free warm - up cycles.

mashinesti.com
Service Manuals

Fault type	Definition
Type13	The SVS lamp is on if the fault occurs and is confirmed. The SVS lamp will be off when the fault is repaired. If 3 consecutive driving cycles detect the fault, the fault is confirmed and the MIL lamp is on while SVS lamp is off. If four consecutive driving cycles detect that the fault has been repaired, the MIL lamp is off. The failure will be deleted after 40 continuous trouble - free warm - up cycles.
Type36	The SVS lamp will be off if the fault occurs and is confirmed. The fault will be deleted after 20 continuous trouble - free warm - up cycles.
Type 39	The SVS lamp will not on if the fault occurs and is confirmed. The fault memory will not record this fault.

mashinesoft.com
09120146259

DTC Code List

Fault Code	Description	Fault type	MIL lamp on or not	SVS indicator on or not
P000A	Slow reaction of intake VVT	5	×	×
P000B	Slow reaction of exhaust VVT	5	×	×
P0010	Open circuit of the VVT intake control valve circuit	3	√	×
P0012	The intake VVT is not in the default location when starting	5	×	×
P0013	Open circuit of the VVT exhaust control valve circuit	3	√	×
P0015	The exhaust VVT is not in the default location when starting	5	×	×
P0016	Relative installation position of camshaft and crankshaft unreasonable	3	√	×
P0017	Relative installation position of camshaft and crankshaft unreasonable	3	√	×
P0030	Upstream oxygen sensor heating control circuit fault	3	√	×
P0031	Upstream oxygen sensor heating control circuit voltage too low	3	√	×
P0032	Upstream oxygen sensor heating control circuit voltage too high	3	√	×
P0036	Downstream oxygen sensor heating control circuit fault	3	√	×
P0037	Downstream oxygen sensor heating control circuit voltage too low	3	√	×
P0038	Downstream oxygen sensor heating control circuit voltage too high	3	√	×
P0053	Upstream oxygen sensor heating internal resistance unreasonable	3	√	×
P0054	Downstream oxygen sensor heating internal resistance unreasonable	3	√	×
P0105	No fluctuation of air intake pressure sensor signal	3	√	×
P0106	Unreasonable air intake pressure sensor / barometric pressure sensor	3	√	×
P0107	Air intake pressure sensor short circuit to ground	3	√	×
P0108	Air intake pressure sensor short circuit to power supply	3	√	×
P0112	Air intake temperature sensor signal voltage is too low	3	√	×

machinesoft.com 09120146259

Fault Code	Description	Fault type	MIL lamp on or not	SVS indicator on or not
P0113	Air intake temperature sensor signal circuit voltage is too high	3	√	×
P0117	Engine coolant temperature sensor voltage is too low	3	√	×
P0118	Engine coolant temperature sensor voltage too high	3	√	×
P0121	Unreasonable electronic throttle position sensor signal 1	13	√	√
P0122	Electrical throttle position sensor signal 1 circuit voltage too low	13	√	√
P0123	Electrical throttle position sensor signal 1 circuit voltage too high	13	√	√
P0130	Upstream oxygen sensor signal unreasonable	3	√	×
P0131	Upstream oxygen sensor signal voltage low	3	√	×
P0132	Upstream oxygen sensor signal circuit voltage too high	3	√	×
P0133	Upstream oxygen sensor aging	3	√	×
P0134	Upstream oxygen sensor circuit signal circuit fault	3	√	×
P0136	Downstream oxygen sensor signal unreasonable	3	√	×
P0137	Downstream oxygen sensor signal voltage low	3	√	×
P0138	Downstream oxygen sensor signal circuit voltage too high	3	√	×
P0140	Downstream oxygen sensor circuit signal fault	3	√	×
P0170	Offline inspecting air - fuel ratio closed loop control self - learning unreasonable	7	×	×
P0171	Offline test air - fuel ratio close loop control self - learning is too rare	7	×	×
P0172	Offline test air - fuel ratio close loop self - learning is too rich	7	×	×
P0201	Cylinder 1 fuel injector control circuit open circuit	3	√	×
P0202	Cylinder 2 fuel injector control circuit open circuit	3	√	×
P0203	Cylinder 3 fuel injector control circuit open circuit	3	√	×
P0204	Cylinder 4 fuel injector control circuit open circuit	3	√	×

mashinesoft.com 09120146259

Fault Code	Description	Fault type	MIL lamp on or not	SVS indicator on or not
P0219	The engine speed exceeds the maximum speed limit	6	×	×
P0221	Unreasonable electronic throttle position sensor signal 2	13	√	√
P0222	Electrical throttle position sensor signal 2 circuit voltage too low	13	√	√
P0223	Electrical throttle position sensor signal 2 circuit voltage too high	13	√	√
P0261	Cylinder 1 fuel injector control circuit short circuit to ground	3	√	×
P0262	Cylinder 1 fuel injector control circuit short circuit to power supply	3	√	×
P0264	Cylinder 2 fuel injector control circuit short circuit to ground	3	√	×
P0265	Cylinder 2 fuel injector control circuit short circuit to power supply	3	√	×
P0267	Cylinder 3 fuel injector control circuit short circuit to ground	3	√	×
P0268	Cylinder 3 fuel injector control circuit short circuit to power supply	3	√	×
P0270	Cylinder 4 fuel injector control circuit short circuit to ground	3	√	×
P0271	Cylinder 4 fuel injector control circuit short circuit to power supply	3	√	×
P0300	Multi - cylinder misfire	2	√ or flash	×
P0301	Cylinder 1 misfire	2	√ or flash	×
P0302	Cylinder 2 misfire	2	√ or flash	×
P0303	Cylinder 3 misfire	2	√ or flash	×
P0304	Cylinder 4 misfire	2	√ or flash	×
P0317	Bad circuit test ABS signal fault	3	√	×
P0321	Crankshaft upper dead point missing teeth signal unreasonable	3	√	×
P0322	Speed sensor signal fault	3	√	×
P0327	Knock sensor signal circuit voltage is too low	3	√	×
P0328	Knock sensor signal crcuit voltage is too high	3	√	×
P0340	Intake phase sensor is installed in improper position(Bank1)	3	√	×
P0341	Intake phase sensor with poor contact (Bank1)	3	√	×

mashinesoft.com 09120146259

Fault Code	Description	Fault type	MIL lamp on or not	SVS indicator on or not
P0342	Short circuit to ground of the intake phase sensor (Bank1)	3	√	×
P0343	Short (or open) circuit to power supply of the intake phase sensor (Bank1)	3	√	×
P0365	Exhaust phase sensor is installed in improper position.(Bank1)	3	√	×
P0366	Exhaust phase sensor with poor contact (Bank1)	3	√	×
P0367	Short circuit to ground of the exhaust phase sensor (Bank1)	3	√	×
P0368	Short (or open) circuit to power supply of the exhaust phase sensor (Bank1)	3	√	×
P0420	Three - way catalytic converter oxygen storage capacity aging (exceed the emission limits)	3	√	×
P0444	Carbon canister control valve control circuit open circuit	3	√	×
P0458	Carbon canister control valve control circuit voltage too low	3	√	×
P0459	Carbon canister control valve control circuit voltage too high	3	√	×
P0480	Cooling fan relay control circuit open circuit (low speed)	5	×	×
P0481	Cooling fan relay control circuit open circuit (high speed)	5	×	×
P0501	Speed sensor signal fault	3	√	×
P0506	Idle speed control speed less than the target idle speed	3	√	×
P0507	Idle speed control speed higher than the target idle speed	3	√	×
P0560	System battery voltage signal is unreasonable	5	×	×
P0562	System battery voltage is too low	5	×	×
P0563	System battery voltage is too high	5	×	×
P0564	Cruise control fault	5	×	×
P0571	Brake switch signal circuit fault or relevancy asynchronous	5	×	×
P0602	Electrical control unit coding fault	3	√	×
P0604	Electrical control unit RAM fault	13	√	√
P0605	Electrical control unit ROM fault	13	√	√
P0606	Electronic throttle safety monitoring malfunction	13	√	√

mashinesoft.com 09120146259

Fault Code	Description	Fault type	MIL lamp on or not	SVS indicator on or not
P0627	Fuel pump relay control circuit open circuit	3	√	×
P0629	Fuel pump relay control circuit voltage is too high	3	√	×
P0645	A/C compressor relay control circuit open circuit	5	×	×
P0647	A/C compressor relay control circuit voltage is too high	5	×	×
P0692	Cooling fan relay control circuit voltage is too high (low speed)	5	×	×
P0694	Cooling fan relay control circuit voltage is too high (high speed)	5	×	×
P0700	MIL external request fault	4	√	×
P0704	Unreasonable clutch pedal switch signal	5	×	×
P1336	Electronic throttle safety monitoring torque limit function	6	×	×
P1523	Airbag module activated	5	×	×
P1545	The difference between the actual electronic throttle position and the target position exceeds the limit	13	√	√
P1558	Too large electronic throttle open resistance	13	√	√
P1559	Self - learning steps fault of electrical throttle	6	×	×
P1564	The system voltage does not meet the electronic throttle self - learning conditions	6	×	×
P1565	Initialization self - learning fault of the lower limit position of the electronic throttle	13	√	√
P1568	Too large electronic throttle return resistance	13	√	√
P1579	Not meeting the self - learning conditions of electrical throttle	6	×	×
P1604	Electronic throttle gain adjustment self - learning fault	6	×	×
P1610	Not programming error of Secret Key and Security Code	39	×	×
P1626	Anti - theft authentication communication error or no response of the anti - theft device	36	×	×
P1631	Anti - theft validation failure	36	×	×

machinesoft.com 084-20146259

Fault Code	Description	Fault type	MIL lamp on or not	SVS indicator on or not
P2088	Short circuit to ground of the VVT intake control valve circuit	3	√	×
P2089	Short circuit to power supply of the VVT intake control valve circuit	3	√	×
P2090	Short circuit to ground of the VVT exhaust control valve circuit	3	√	×
P2091	Short circuit to power supply of the VVT exhaust control valve circuit	3	√	×
P2106	Electronic throttle drive level fault	13	√	√
P2122	Electronic accelerator pedal position sensor 1 signal voltage too low	13	√	√
P2123	Electronic accelerator pedal position sensor 1 signal voltage too high	13	√	√
P2127	Electronic accelerator pedal position sensor 2 signal voltage too low	13	√	√
P2128	Electronic accelerator pedal position sensor 2 signal voltage too high	13	√	√
P2138	Unreasonable electronic accelerator pedal position sensor signal	13	√	√
P2177	Air - fuel ratio closed loop control self-learning value exceed the upper limits (medium load range)	11	√	×
P2178	Air - fuel ratio closed loop control self-learning value exceed the lower limits (medium load range)	11	√	×
P2187	Air - fuel ratio closed loop control self-learning value exceed the upper limits (low load range)	11	√	×
P2188	Air - fuel ratio closed loop control self-learning value exceed the lower limits (low load range)	11	√	×
P2195	Upstream oxygen sensor aging	3	√	×
P2196	Upstream oxygen sensor aging	3	√	×
P2270	Downstream oxygen sensor aging	3	√	×
P2271	Downstream oxygen sensor aging	3	√	×
U0001	CAN communication - related diagno-sis	3	√	×
U0101	Loss of communication between ECU and ABS control module	3	√	×
U0140	Lost communication with the BCM or signal abnormalities	3	√	×

machinesoft.com
Code 14259

Failure Protection List

DTC Code	Description	Failure Protection Operation	Prerequisite of Releasing Failure Protection
P000A, P0012	Intake VVT fault		Repair fault
P0010, P2088, P2089	Intake VVT hydraulic control valve circuit fault	Disable variable intake control	Remove circuit faults between intake oil control valve and ECM, or replace the intake oil control valve
P000B, P0015	Exhaust VVT fault		Repair fault
P0013, P2090, P2091	Exhaust VVT hydraulic control valve circuit fault	Disable variable exhaust control	Remove circuit faults between exhaust oil control valve and ECM, or replace the exhaust oil control valve
P0016, P0017	Relative installation position of camshaft and crankshaft unreasonable	Camshaft control off Camshaft and crankshaft relative position self - learning off Misfire detect off	Inspect the camshaft and crankshaft mounting location
P0030, P0031, P0032, P0053	Pre - catalytic oxygen sensor heating control circuit fault	Stop closed loop fuel control	Remove circuit faults between the heater and ECM, or replace pre - catalytic oxygen sensor
P0036, P0037, P0038, P0054	Post - catalytic oxygen sensor heating control circuit fault	Disable post - catalytic oxygen sensor	Remove circuit faults between Post - catalytic oxygen sensor and ECM, or replace the Post - catalytic oxygen sensor
P0105, P0106, P0107, P0108	Inlet air pressure sensor signal fault	1. Rear oxygen close loop control 2. Catalyst heating function 3. %DKAT catalyst testing close 4. %DKVS fuel supply self - learning diagnosis 5. Minimum idle fault 6. %DLSA function off	Remove circuit faults between MAP sensor and ECM, or replace the intake pressure & temperature sensor

mashinesoft.com 09120146259

DTC Code	Description	Failure Protection Operation	Prerequisite of Releasing Failure Protection
P0112, P0113	Air intake temperature sensor signal fault	1. Catalyst heating off 2. Stop fuel supply self-learning 3. In the afterrun stage, all cooling fans stop working and not affected by the water temperature 4. Idle diagnose 5. Pre - catalytic oxygen sensor aging diagnosis	Remove circuit faults between IAT sensor and ECM, or replace the intake pressure & temperature sensor
P0117, P0118	Coolant temperature sensor signal fault	1. Stop fuel supply self - learning 2. In the afterrun stage, all the cooling air fans are working and not affected by the water temperature. 3. Idle diagnosis off 4. Pre - catalytic oxygen sensor aging diagnosis closed 5. Pre - catalytic oxygen sensor circuit diagnosis closed 6. Post - catalytic oxygen sensor circuit diagnosis closed	Remove circuit faults between CTS sensor and ECM, or replace the coolant temperature sensor
P0121, P0122, P0123, P0221, P0222, P0223	Throttle position sensor signal fault	1. Estimate the throttle opening according to engine RPM 2. Disable the flooding feature.	Remove circuit faults between TPS sensor and ECM, or replace TPS sensor
P0130, P0131, P0132, P0134	Pre - catalytic oxygen sensor signal fault	Stop closed loop fuel control	Remove injector choking, fuel pressure regulator damage, intake vacuum leakage, exhaust pipe leakage, fuel contamination or circuit faults between pre - catalytic oxygen sensor and ECM

mashinesoft.com 09120146259

DTC Code	Description	Failure Protection Operation	Prerequisite of Releasing Failure Protection
P0133, P2195, P2196	Pre - catalytic oxygen sensor response too slow	Stop closed loop fuel control	Remove oxygen sensor poisoning fault due to fuel contamination or excessive oil consumption, replace the oxygen sensor
P0136、 P0137、 P0138、 P0140	Post - catalytic oxygen sensor signal fault	Disable post - catalytic oxygen sensor	Remove circuit faults between post - catalytic oxygen sensor and ECM, or replace the post - catalytic oxygen sensor
P0170, P0171, P0172	Offline inspecting air - fuel ratio closed loop control self - learning unreasonaable		Remove intake air leakage, inadequate fuel pressure, fuel injector choking or crankcase forced ventilation jamming fault
P0201, P0202, P0203, P0204, P0261, P0262, P0264, P0265, P0267, P0268, P0270, P0271	Fuel injector circuit fault		Remove circuit faults between fuel injector and ECM, or replace the injector
P0219	The engine speed exceeds the maximum speed limit		Repair faults or replace wiring harness

mashinesoft.com 09120146259

DTC Code	Description	Failure Protection Operation	Prerequisite of Releasing Failure Protection
P0300, P0301, P0302, P0303, P0304	Single / multiple cylinder misfire	1. Misfire fault (E_md=1) • 1. Misfire monitoring fuel supply self - learning function Off 2. Misfire causing B_mdarv setting: • 1. Close the rear oxygen to control %LRHK oil • 2. Misfire monitoring fuel supply self - learning • 3. Forbid air - fuel ratio self -learning • 4. Forbid carbon canister rinse 3. Detect the maximum misfire fault and carry out the broken cylinder operation: • 1. Close the Lambda closed -l oop control.	Remove ignition system fault, air leakage, incorrect crankshaft position sensor clearance, incorrect ignition timing, fuel injector fault, incorrect fuel pressure, incorrect engine compression ratio, or replace ECM
P0317	Circuit test ABS signal fault		Repair faults or replace wiring harness
P0321, P0322	Crankshaft position sensor fault		Remove poor electrical connection, interference noise, target related fault, circuit faults between crankshaft position sensor and ECM, or replace ECM
P0327, P0328	Knock sensor signal fault	Take the system default value as the ignition advance angle	Remove circuit faults between knock sensor and ECM, or replace the knock sensor
P0340, P0341, P0342, P0343	Intake phase sensor signal fault		Remove circuit faults between intake air phase sensor and ECM, or replace the intake air phase sensor

mashinesoft.com 09120146259

DTC Code	Description	Failure Protection Operation	Prerequisite of Releasing Failure Protection
P0365, P0366, P0367, P0368	Exhaust phase sensor signal fault		Remove circuit faults between intake air phase sensor and ECM, or replace the intake air phase sensor
P0420	Catalytic converter efficiency low		Replace the catalytic converter
P0444, P0458, P0459	Carbon canister solenoid circuit fault	Disable the canister purge feature	Remove circuit faults between carbon canister solenoid and ECM, or replace the solenoid
P0480, P0481	Low - speed fan and high - speed fan faults		Remove circuit faults between fan and ECM
P0501	Speed sensor signal fault	1. The stepper motor self - learning function turns off. 2. Close the bm speed reference point diagnosis. 3. Idle diagnosis off 4. The battery voltage diagnosis is closed	Remove circuit faults between vehicle speed sensor and TCM, or replace the vehicle speed sensor
P0506	Idle speed too low	Disable idle speed regulation	Remove idle control circuit, ETC or ignition system faults
P0507	Idle speed too high	Disable idle speed regulation	Remove ignition system fault, vacuum leakage, circuit faults between ETC and TCM, or ETC fault
P0560, P0562 and P0563	System battery voltage is unreasonable		Remove the charging system faults or replace ECM
P0564	Cruise control fault	Forbid the cruise control function	Repair faults or replace wiring harness
P0571	Brake switch signal circuit fault		Remove circuit faults between brake switch and ECM, or replace the brake switch
P0602, P0604, P0605, P0606	ECM fault		Repair faults or replace ECM

mashinesoft.com 09120146259

DTC Code	Description	Failure Protection Operation	Prerequisite of Releasing Failure Protection
P0627, P0629	Fuel pump relay fault		Remove circuit faults between fuel pump relay and ECM, or replace the fuel pump relay
P0645, P0647	A/C clutch relay circuit fault		Remove circuit faults between A/C clutch relay and ECM, or replace the A/C clutch relay
P0692, P0694	Cooling fan relay control circuit fault		Remove circuit faults between fan and ECM
P0700	MIL external request fault		Remove the fault circuit
P0704	Unreasonable clutch pedal switch signal		Repair faults or replace the clutch switch
P1336, P1545, P1558, P1559, P1564, P1565, P1568, P1579, P1604	Self - learning fault of electrical throttle		Remove circuit faults between ETC and ECM, or replace ECU
P1523	Airbag enable fault		Repair faults or replace wiring harness
P1610, P1626, P1631	Anti - theft authentication fault		Repair faults or replace wiring harness
P2106	Electronic throttle drive level fault		Remove circuit faults between ETC and ECM, or replace electronic throttle
P2122, P2123, P2127, P2128, P2138	Electronic accelerator pedal position sensor signal fault		Remove circuit faults between electronic accelerator pedal position sensor and ECM, or replace the electronic accelerator pedal position sensor
P2177, P2178, P2187, P2188	Air -fuel ratio closed loop control self - learning unreasonable		Repair faults or replace wiring harness
U0001, U0101, U0140	CAN communication fault		Repair faults or replace wiring harness

machinesoft.com 09120146259

Data Stream List

By reading the "Data Stream List" on the fault diagnostic tool, do not remove any component, and inspect the working state of the switches, the sensors, and the actuators. Before the fault diagnosis of the engine electrical control system, the observation and analysis of the data is the first step in trouble-shooting, this can reduce the troubleshooting time.

CAUTION: The following table lists the data under normal conditions, only for reference. Do not determine the failure based on these standard values. Generally, use a normal vehicle to compare a vehicle in diagnosis under the same state to determine the data of the diagnosis vehicle uner the current state normal or not.

1. Let the engine reach normal operating temperature.
2. Turn the ignition switch to position "LOCK".
3. Connect the fault diagnostic tool.
4. Turn the ignition switch to position "ON".
5. Select "Changan Auto" / "CS35" / "UMC ME788 (AT)" / "read the data stream".
6. Refer to the chart below to inspect all the data.

mashinesoft.com
09120146259

Data Flow Item	Ignition Switch ON	Idle Running	Engine Rotate Speed 2,500 rpm
Maximum indicated torque	47.7 %	61.8 %	82.8 %
Engine target torque	17.0 %	9.9 %	15.2 %
Actual engine torque	0.0 %	9.8 %	15.0 %
Engine coolant temperature after filtering	73.5 ℃	90.8 ℃	93.0 ℃
Engine rotate speed	0.0 rmb	740.0 rmb	2,500.0 rmb
Engine running time after start	0.0 s	38.8 s	213.0 s
Speed after filtering	0.0 km/h	0.0 km/h	0.0 km/h
Ambient pressure	972.7 hPa	972.7 hPa	972.7 hPa
Battery voltage	12.0 V	14.3 V	14.3 V
Throttle opening	-6.5 %	-2.7 %	-7.2 %
Air intake temperature	13.5 ℃	27.0 ℃	31.5 ℃
Ambient temperature	5.3 ℃	5.3 ℃	5.3 ℃
Acceleration pedal angle	0.0 %	0.0 %	4.3 %
Fuel consumption	0.0 L/s	0.000143 L/s	0.000746 L/s
Manifold exhaust temperature model	50.0 ℃	365.5 ℃	481.0 ℃
Engine load	0.0 %	18.4 %	17.2 %
Air mass	0 kg/h	4 kg/h	21 kg/h
Downstream catalytic converter oxygen sensor voltage	0.459 V	0.841 V	0.689 V
Inflatable efficiency (relatively inflated)	99.8 %	15.0 %	15.0 %
ETS - path as the environmental conditions of the monitoring and diagnosis	128	128	128
The torque path acts as the basis for the diagnosis of the state of the environment in the function and function monitoring	96	96	96
Function monitoring: the actual torque response in the torque comparison	64.1 %	6.6 %	12.9 %
Alternative model of error engine temperature signal	50.3 ℃	90.0 ℃	90.0 ℃
Target throttle opening	1.6 %	2.4 %	6.7 %
Model exhaust temperature of the downstream catalytic converter	50 ℃	385 ℃	450 ℃
Engine coolant temperature without filtering	72.8 ℃	91.5 ℃	96.0 ℃
Function monitoring: calculate the actual torque	64.1 %	63 %	13.7 %

mashinesoft.com 09120146259

Data Flow Item	Ignition Switch ON	Idle Running	Engine Rotate Speed 2,500 rpm
Actual ignition advance angle	0.0 °	-9.8 °	-41.3 °
Air mass flow rate coefficient for time inflatable model	1.000	1.030	1.003
Valve opening calculated by the throttle voltage meter 1	-6.3 %	-2.3 %	-6.6%
Valve opening calculated by the throttle voltage meter 2	-6.3 %	-2.3 %	-6.3 %
PID control amount of the control throttle	88 %	4.2 %	8.2 %
8 bit accuracy variable of inter - row opening	0.0%	0.0%	0.0%
First circuit signal voltage of the electronic throttle under inter - row mode	0.8 V	0.8 V	0.8 V
Acceleration pedal opening expressed by the sensor voltage 1	0.5 V	0.5 V	0.5 V
Vehicle acceleration in the longitudinal direction	0.0 m/s²	0.0 m/s²	0.0 m/s²
Intake manifold pressure	972.7 hPa	366.1 hPa	311.6 hPa
Clutch operand detection	0	0	0
Intake temperature without filtering	13.5 ℃	27.8 ℃	34.5 ℃
Speed without filtering	0.0 km/h	0.0 km/h	0.0 km/h
Sampling battery voltage	3.4 V	4.1 V	4.1 V
Intake open angle relative to LWOT	-44.0 °	-44.0 °	-44.1 °
Expected intake camshaft open angle	-44.0 °	-44.0 °	-43.5 °
Oil temperature	80.9 ℃	100.4 ℃	104.9 ℃
Lambda closed - loop control coefficient of Bank 1	1.000	1.012	1.000
Mixture self - learning multiplication correction factor	1.000	1.000	1.000
Lambda closed - loop control coefficient of Bank 2	0.0	0.0	0.0
Throttle potentiometer 1 voltage	0.8 V	0.6V	0.8 V
Throttle potentiometer 2 voltage	4.2 V	4.4 V	4.2 V
Mixed gas self - learning additional correction	0.0	1536.0	1536.0
Acceleration pedal potentiometer 1 voltage	0.7 V	0.7 V	1.0 V

mashinesoft.com 09120146259

Data Flow Item	Ignition Switch ON	Idle Running	Engine Rotate Speed 2,500 rpm
Acceleration pedal potentiometer 2 voltage	0.4 V	0.4 V	0.5 V
Two times the voltage of the acceleration pedal potentiometer 2	0.8 V	0.8 V	0.9 V
Internal resistance of the post - catalytic oxygen sensor	0.0 hm	0.0 hm	800 hm
Upstream catalytic converter exhaust temperature	50.0 ℃	358.1 ℃	510.6 ℃
Air mass flow rate	0.0 kg/h	0.0 kg/h	0.0 kg/h
Injection time	0.0 ms	0.2 ms	0.1 ms
Static idle target speed	740 rpm	720 rpm	720 rpm
Cylinder 1 postpone ignition knock control	0.0 °	0.0 °	0.0 °
Cylinder 2 postpone ignition knock control	0.0 °	0.0 °	0.0 °
Cylinder 3 postpone ignition knock control	0.0 °	0.0 °	0.0 °
Cylinder 4 postpone ignition knock control	0.0 °	0.0 °	0.0 °
Reference voltage for cylinder 1 knock control	0.977 V	0.135 V	0.245 V
Reference voltage for cylinder 2 knock control	0.977 V	0.157 V	0.274 V
Reference voltage for cylinder 3 knock control	0.977 V	0.156 V	0.484 V
Reference voltage for cylinder 4 knock control	0.977 V	0.148 V	0.327 V
Mileage with fault lamp enabled	0 km	0 km	0 km
Coolant temperature during start	71.3 ℃	91.5 ℃	91.5 ℃
Standard air charge calculated by canister control	0.0 kg/h	0.121 kg/h	0.0 kg/h
Basic ignition angle	0 °	29 °	41 °
Number statistic of misfire cylinder	0	0	0
1st cylinder misfire number	0	0	0
2nd cylinder misfire number	0	0	0
3rd cylinder misfire number	0	0	0
4th cylinder misfire number	0	0	0
Misfire range under the minimum load	0.0 %	0.0 %	0.0 %
Misfire range under the maximum load	0.0 %	0.0 %	0.0 %
Lambda mandatory regulation cycle	34,304	8,192	58,924

machinesoft.com 08120146259

Data Flow Item	Ignition Switch ON	Idle Running	Engine Rotate Speed 2,500 rpm
Target torque change under the idle speed control and expected torque correction idling control	0.0 %	-0.2 %	0.0 %
Pre - catalytic oxygen sensor voltage	0.4 V	0.1 V	0.1 V
Post - catalytic oxygen sensor voltage	0.5 V	0.8 V	0.7 V
The actual intake manifold pressure sensor voltage	3.9 V	1.1 V	0.8 V
Resistance torque self - learning value	0.0 %	98.8 %	98.9 %
Misfire range under minimum engine speed	10,200 rpm	10,200 rpm	10,200 rpm
Misfire range under maximum engine speed	0 rpm	0 rpm	0 rpm
Intake manifold switching conditions	Off	Off	Off
Carbon canister control valve	0.0 %	11.7 %	0.0 %
Fuel pump relay	Off	On	On
Cooling fan relay # 1	Off	Off	On
Cooling fan relay # 2	Off	Off	Off
A/C clutch	Off	Off	Off
Throttle valve state	Off	Off	On
Target idle speed	740 rpm	720 rpm	720 rpm

mashinesoft.com 09120146259

Active Test List

By reading the "Active Test List" on the diagnostic tool, do not remove any components, inspect the work state of relay and actuator that controlled by ECM. Before the fault diagnosis of the engine electronic control system. The implementation of active test is the precondition in troubleshooting, this can reduce the troubleshooting time.

CAUTION: The following table lists the data under normal conditions, only for reference. Do not determine the failure based on these standard values. Generally, use a normal vehicle to compare a vehicle in diagnosis under the same state to determine the data of the diagnosis vehicle uner the current state normal or not.

1. Let the engine reach normal operating temperature.
2. Turn the ignition switch to position "LOCK".
3. Connect the fault diagnostic tool.
4. Turn the ignition switch to position "ON".
5. Select "Changan Auto" / "CS35" / "UMC ME788 (AT)" / "action test".
6. Refer to the chart below, carry out active test.

Diagnostic Tool Display Item	Description	Control Range	Diagnostic Description
Carbon canister control valve	Enable the carbon canister control valve	0 ~ 100	**CAUTION: The vacuum degree measured by the fuel tank vacuum sensor shall be less than the setting match threshold (pte_W> DPTEBU); in the enhanced evaporation system, the setting match fuel tank protection algorithm shall not go wrong (E_TES).** Control the carbon canister control command, which is between 0 ~ 100, realizing control over cleaning flow of carbon canister.
Fuel pump relay	Enable the fuel pump relay	On / Off	**CAUTION: This test can only be carried out only when vehicle speed is 0 and speed sensor is with no fault.** This function could control fuel pump relay. When the command is "ON", the fuel pump relay will be energized / de-energized within 3 ~ 5 s.
Cooling fan relay # 1	Enable low speed EDF relay	On / Off	**CAUTION: Carry out the test only when engine coolant temperature is lower than 100 ℃ (212 ºF) with A/C switch off.** This function could control low speed EDF relay. When the command is "ON", the electronic fan will be started at low speed for 5 s.
Cooling fan relay # 2	Enable high speed EDF relay	On / Off	**Carry out the test only when engine coolant temperature is lower than 100 ℃ (212 ºF) with A/C switch off.** This function could control high speed electronic fan relay. When the command is "ON", the electronic fan will be started at high speed for 5 s.

mashinesoft.com 09120146259

Diagnostic Tool Display Item	Description	Control Range	Diagnostic Description
A/C clutch	Enable A/C compressor clutch relay	On / Off	**Test conditions for closed air conditioning clutch: No actuator control restriction. Test conditions for open air conditioning: the engine shall stop running.** The function controls A/C compressor relay. When the instruction is "ON", the A/C compressor relay will be ON / OFF within 3 ~ 5 s.
Throttle position controller	Enable the electronic throttle actuator motor	0 ~ 100	**CAUTION: This function could be carried out only when the engine stops running and the vehicle speed is zero.** Control the throttle actuator motor control command, which is between 0 ~ 100, realizing control of throttle opening.
Idle speed control	Control engine speed to set speed	0 ~ 2,550	**CAUTION: This function could be carried out only when the engine idle speed is lower than 1,000 RPM and the vehicle speed is zero.** Control the idle speed control command, which is between 0 ~ 2,550, realizing control of engine idle speed.
Reset ECU self - learning value	Clear self - learning value that been stroed by engine	Reset / Return	**CAUTION: Carry out the test only when ignition switch is at "ON" position, engine is not running.** Clear self - learning value that been stroed by engine.

mashinesoft.com 09120146259

DTC Diagnostic Procedure Index

Fault Code	Description	Diagnosis Procedures
P000A	Slow reaction of intake VVT	Refer to: DTC P000A, P0012, P0010, P2088, P2089
P0010	Open circuit of the VVT intake control valve circuit	
P0012	The intake VVT is not in the default position when starting	
P2088	Short circuit to ground of the VVT intake control valve circuit	
P2089	Short circuit to power supply of the VVT intake control valve circuit	
P000B	Slow reaction of exhaust VVT	Refer to: DTC P000B, P0013, P0015, P2090, P2091
P0013	Open circuit of the VVT exhaust control valve circuit	
P0015	The exhaust VVT is not in the default location when starting	
P2090	Short circuit to ground of the VVT exhaust control valve circuit	
P2091	Short circuit to power supply of the VVT exhaust control valve circuit	
P0016	Relative installation position of camshaft and crankshaft unreasonable	Refer to: DTC P0016, P0017
P0017	Relative installation position of camshaft and crankshaft unreasonable	
P0030	Upstream oxygen sensor heating control circuit fault	Refer to: DTC P0030, P0031, P0032, P0053
P0031	Upstream oxygen sensor heating control circuit voltage too low	
P0032	Upstream oxygen sensor heating control circuit voltage too high	
P0053	Upstream oxygen sensor heating internal resistance unreasonable	
P0036	Downstream oxygen sensor heating control circuit fault	Refer to: DTC P0036, P0037, P0038, P0054
P0037	Downstream oxygen sensor heating control circuit voltage too low	
P0038	Downstream oxygen sensor heating control circuit voltage too high	
P0054	Downstream oxygen sensor heating internal resistance unreasonable	

mashinesoft.com 09120146259

Fault Code	Description	Diagnosis Procedures
P0105	No fluctuation of air intake pressure sensor signal	Refer to: DTC P0105, P0106, P0107, P0108
P0106	Unreasonable air intake pressure sensor / barometric pressure sensor	
P0107	Air intake pressure sensor short circuit to ground	
P0108	Air intake pressure sensor short circuit to power supply	
P0112	Air intake temperature sensor signal voltage is too low	Refer to: DTC P0112, P0113
P0113	Air intake temperature sensor signal circuit voltage is too high	
P0117	Engine coolant temperature sensor voltage is too low	Refer to: DTC P0117, P0118
P0118	Engine coolant temperature sensor voltage too high	
P0121	Unreasonable electronic throttle position sensor signal 1	Refer to: DTC P0121, P0122 and P0123
P0122	Electrical throttle position sensor signal 1 circuit voltage too low	
P0123	Electrical throttle position sensor signal 1 circuit voltage too high	
P0130	Upstream oxygen sensor signal unreasonable	Refer to: DTC P0130, P0131, P0132, P0133, P0134, P2195, P2196
P0131	Upstream oxygen sensor signal voltage low	
P0132	Upstream oxygen sensor signal circuit voltage too high	
P0133	Upstream oxygen sensor aging	
P0134	Upstream oxygen sensor circuit signal circuit fault	
P2195	Upstream oxygen sensor aging	
P2196	Upstream oxygen sensor aging	
P0136	Downstream oxygen sensor signal unreasonable	Refer to: DTC P0136, P0137, P0138, P0140, P2170, P2171
P0137	Downstream oxygen sensor signal voltage low	
P0138	Downstream oxygen sensor signal circuit voltage too high	
P0140	Downstream oxygen sensor circuit signal fault	
P2170	Downstream oxygen sensor aging	
P2171	Downstream oxygen sensor aging	

machinesoft.com 0912014259

Fault Code	Description	Diagnosis Procedures
P0170	Offline inspecting air - fuel ratio closed loop control self - learning unreasonable	Refer to: DTC P0170, P0171, P0172, P2177, P2178, P2187, P2188
P0171	Offline test air - fuel ratio close loop control self - learning is too rare	
P0172	Offline test air - fuel ratio close loop self - learning is too rich	
P2177	Air - fuel ratio closed loop control self - learning value exceed the upper limits (medium load range)	
P2178	Air - fuel ratio closed loop control self - learning value exceed the lower limits (medium load range)	
P2187	Air - fuel ratio closed loop control self - learning value exceed the upper limits (low load range)	
P2188	Air - fuel ratio closed loop control self - learning value exceed the lower limits (low load range)	
P0201	Cylinder 1 fuel injector control circuit open circuit	Refer to: DTC P0201, P0261, P0262
P0261	Cylinder 1 fuel injector control circuit short circuit to ground	
P0262	Cylinder 1 fuel injector control circuit short circuit to power supply	
P0202	Cylinder 2 fuel injector control circuit open circuit	Refer to: DTC P0201, P0261, P0262
P0264	Cylinder 2 fuel injector control circuit short circuit to ground	
P0265	Cylinder 2 fuel injector control circuit short circuit to power supply	
P0203	Cylinder 3 fuel injector control circuit open circuit	Refer to: DTC P0201, P0261, P0262
P0267	Cylinder 3 fuel injector control circuit short circuit to ground	
P0268	Cylinder 3 fuel injector control circuit short circuit to power supply	
P0204	Cylinder 4 fuel injector control circuit open circuit	Refer to: DTC P0201, P0261, P0262
P0270	Cylinder 4 fuel injector control circuit short circuit to ground	
P0271	Cylinder 4 fuel injector control circuit short circuit to power supply	

machinesoft.com 09120146259

Fault Code	Description	Diagnosis Procedures
P0221	Unreasonable electronic throttle position sensor signal 2	Refer to: DTC P0221, P0222 and P0223
P0222	Electrical throttle position sensor signal 2 circuit voltage too low	
P0223	Electrical throttle position sensor signal 2 circuit voltage too high	
P0300	Multi - cylinder misfire	Refer to: DTC P0300, P0301, P0302, P0303, P0304
P0301	Cylinder 1 misfire	
P0302	Cylinder 2 misfire	
P0303	Cylinder 3 misfire	
P0304	Cylinder 4 misfire	
P0317	Circuit test ABS signal fault	Refer to: DTC P0317, P0501, P1523
P0501	Speed sensor signal fault	
P1523	Airbag activated	
P0321	Crankshaft upper dead point missing teeth signal unreasonable	Refer to: DTC P0324, P0325
P0322	Speed sensor signal fault	
P0327	Knock sensor signal circuit voltage is too low	Refer to: DTC P0335, P0336
P0328	Knock sensor signal circuit voltage is too high	
P0340	Phase sensor is installed in improper position	Refer to: DTC P0340, P0341, P0342, P0343
P0341	Intake phase sensor with poor contact (Bank1)	
P0342	Short circuit to ground of the intake phase sensor (Bank1)	
P0343	Short (or open) circuit to power supply of the intake phase sensor (Bank1)	
P0365	Exhaust phase sensor is installed in improper position (Bank1)	Refer to: DTC P0340, P0341, P0342, P0343
P0366	Exhaust phase sensor with poor contact (Bank1)	
P0367	Short circuit to ground of the exhaust phase sensor (Bank1)	
P0368	Short (or open) circuit to power supply of the exhaust phase sensor (Bank1)	
P0420	Three - way catalytic converter oxygen storage capacity aging (exceed the emission limits)	Refer to: DTC P0420

machinesoft.com 09120146259

Fault Code	Description	Diagnosis Procedures
P0444	Carbon canister control valve control circuit open circuit	Refer to: DTC P0444, P0458 and P0459
P0458	Carbon canister control valve control circuit voltage too low	
P0459	Carbon canister control valve control circuit voltage too high	
P0480	Cooling fan relay control circuit open circuit (low speed)	Refer to: DTC P0480, P0692
P0692	Cooling fan relay control circuit voltage is too high (low speed)	
P0481	Cooling fan relay control circuit open circuit (high speed)	Refer to: DTC P0481, P0694
P0694	Cooling fan relay control circuit voltage is too high (high speed)	
P0506	Idle speed control speed less than the target idle speed	Refer to: DTC P0506, P0507
P0507	Idle speed control speed higher than the target idle speed	
P0560	System battery voltage signal is unreasonable	Refer to: DTC P0560, P0562, P0563
P0562	System battery voltage is too low	
P0563	System battery voltage is too high	
P0564	Cruise control fault	Refer to: DTC P0564
P0571	Brake switch signal circuit fault or relevancy asynchronous	Refer to: DTC P0571
P0219	The engine speed exceeds the maximum speed limit	Refer to: DTC P0219, P0602, P0604, P0605, P0606
P0602	Electrical control unit coding fault	
P0604	Electrical control unit RAM fault	
P0605	Electrical control unit ROM fault	
P0627	Fuel pump relay control circuit open circuit	Refer to: DTC P0627, P0629
P0629	Oil pump relay control circuit voltage is too high	
P0645	A/C compressor relay control circuit open circuit	Refer to: DTC P0645, P0647
P0647	A/C compressor relay control circuit voltage is too high	
P0700	MIL external request fault	Refer to: DTC P0700
P0704	Unreasonable clutch pedal switch signal	Refer to: DTC P0704

machinesoft.com 09120146259

Fault Code	Description	Diagnosis Procedures
P1336	Electronic throttle safety monitoring torque limit function	Refer to: DTC P1336, P1545, P1558, P1568
P1545	The difference between the actual electronic throttle position and the target position exceeds the limit	
P1558	Too large electronic throttle open resistance	
P1568	Too large electronic throttle return resistance	
P0606	Electronic throttle safety monitoring malfunction	Refer to: DTC P0606, P1559, P1564, P1565, P1579, P1604
P1559	Self - learning steps fault of electrical throttle	
P1564	The system voltage does not meet the electronic throttle self - learning conditions	
P1565	Initialization self - learning fault of the lower limit position of the electronic throttle	
P1579	Not meeting self - learning conditions of electrical throttle	
P1604	Electronic throttle gain adjustment self - learning fault	
P1610	Not programming error of Secret Key and Security Code	Refer to: DTC P1610, P1626, P1631
P1626	Anti - theft authentication communication error or no response of the anti - theft device	
P1631	Anti - theft validation failure	
P2106	Electronic throttle dirve level fault	Refer to: DTC P2106
P2122	Electronic accelerator pedal position sensor 1 signal voltage too low	Refer to: DTC P2122, P2123, P2138
P2123	Electronic accelerator pedal position sensor 1 signal voltage too high	
P2138	Unreasonable electronic accelerator pedal position sensor signal	
P2127	Electronic accelerator pedal position sensor 2 signal voltage too low	Refer to: DTC P2127, P2128, P2138
P2128	Electronic accelerator pedal position sensor 2 signal voltage too high	
P2138	Unreasonable electronic accelerator pedal position sensor signal	

Mashinesoft.com 09129146259

Fault Code	Description	Diagnosis Procedures
U0001	CAN communication - related diagnosis	Refer to: DTC U0001, U0101, U0140
U0101	Loss of communication between ECU and TCU control module	
U0140	Lost communication with the BCM or signal abnormalities	

mashinesoft.com
09120146259

DTC P000A, P0010, P0012, P2088, P2089

DTC Description

Fault Code	Description	Definition
P000A	Slow reaction of intake VVT	• Intake VVT hydraulic control valve circuits consist of the following: • Supply voltage: main relay provides reference voltage to terminal 2 of intake control valve wiring harness connector E02 through terminal 45 of wiring harness connector C01 fuse EF23. • ECM control ground circuit: ECM positions the terminal 1 on intake control valve wiring harness connector E02 to low electric potential through terminal 48 of ECM wiring harness connector E01.
P0010	Open circuit of the VVT intake control valve circuit	
P0012	The intake VVT is not in the default location when starting	
P2088	Short circuit to ground of the VVT intake control valve circuit	
P2089	Short circuit to power supply of the VVT intake control valve circuit	

2. Possible Sources

Fault Code	Test Tactics	Setting Conditions (Control Strategy)	Fault
P000A	Hardware circuit inspect	• Short to ground or open circuit • Short circuit to power supply	• Intake control valve circuit fault • Intake control valve fault • ECM
P0010			
P0012			
P2088			
P2089			

mashinesoft.com 0912014625

3. Diagnosis

Test Conditions	Details/Results/Actions
1. General inspection	
	A. Inspect the intake control valve wiring harness connector E02 for loose or poor contact. B. Check if the intake control valve is properly installed. Is it normal? **Y** Go to step 2. **N** Repair the fault.

Test Conditions	Details/Results/Actions
2. Inspect the power supply line of intake control valve	
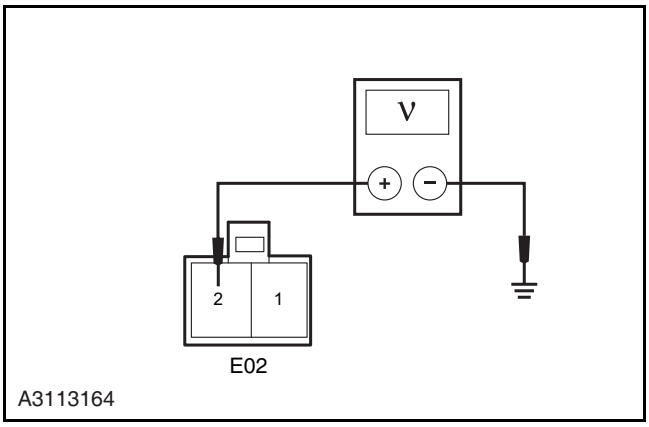	A. Turn the ignition switch to position "LOCK". B. Disconnect camshaft phase sensor wiring harness connector E02. C. Turn the ignition switch to position "ON". D. Measure the voltage between terminal 2 of intake control valve wiring harness connector E02 and reliable grounding. **Standard Voltage Value: 11 ~ 14 V** Is the voltage normal? **Y** Go to step 3. **N** Repair the circuit faults from terminal 2 of camshaft position sensor wiring harness connector E02 to the terminal 45 of the engine compartment electric center C10 fuse EF23.
3. Inspect the ground circuit of the intake control valve	
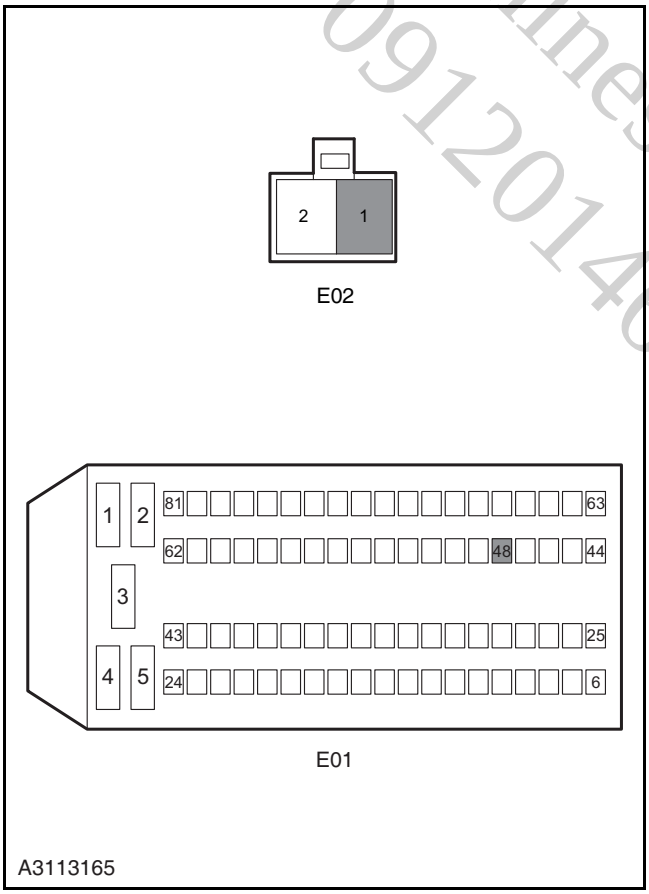	A. Turn the ignition switch to position "LOCK". B. Disconnect the battery negative cable. C. Disconnect OCV intake control valve wiring harness connector E02. D. Disconnect ECM wiring harness connector E01. E. Measure the resistance between terminal 1 of OCV intake control valve wiring harness connector E02 and terminal 48 of ECM wiring harness connector E01. **Standard Resistance Value: less than 5 Ω** Is the resistance normal? **Y** Go to step 4. **N** Repair the circuit between the terminal 1 of OCV intake control valve wiring harness connector E02 and the terminal 48 of ECM wiring harness connector E01.

machinesoft.com 09120146259

Test Conditions	Details/Results/Actions
4. Inspect the OCV intake control valve	
	A. Turn the ignition switch to position "LOCK". B. Replace OCV intake control valve of failed vehicle. C. Turn the ignition to the "ON" position and test with diagnostic tool if DTC is cleared. Is it normal? **Y** Replace with a new OCV intake control valve **N** Go to step 5.
5. Inspect the ECM power supply circuit	
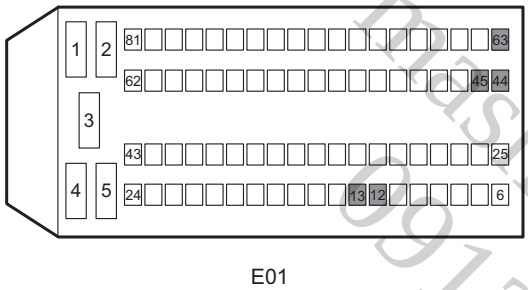 E01 A3113031	A. Turn the ignition switch to position "LOCK". B. Measure from the back of ECM wiring harness connector E01. C. Turn the ignition switch to "ON" position and use a multimeter to measure the voltage between the terminals 12, 13, 44, 45 and 63 of the ECM wiring harness connector E01 and the power supply. **Standard Voltage Value: 11 ~ 14 V** Is the voltage normal? **Y** Go to step 6. **N** Repair and inspect the ECM power supply circuit.
6. Inspect the ECM ground circuit	
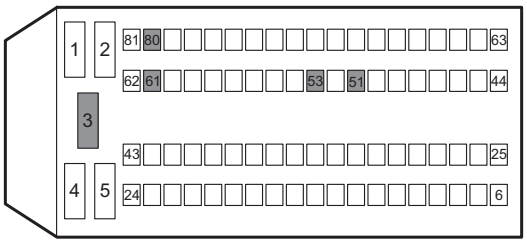 E01 A3113032	A. Turn the ignition switch to position "LOCK". B. Measure from the back of ECM wiring harness connector E01. C. Measure the resistance between the ECM wiring harness connector E01 terminal 3, 51, 53, 61 and 80 and the reliable grounding with a multimeter. **Standard Resistance Value: less than 5 Ω** Is the resistance value normal? **Y** Replace the engine control module. **Refer to: Engine Control Module (3.1.13 Electronic Control System - ME7, Removal and Installation).** **N** Inspect and repair the ECM ground circuit.

machinesoft.com 08912014625

DTC P000B, P0013, P0015, P2090, P2091

DTC Description

Fault Code	Description	Definition
P000B	Slow reaction of the exhaust VVT	• Exhaust VVT hydraulic control valve circuits consist of the following: • Supply voltage: main relay provides reference voltage to terminal 2 of exhaust control valve wiring harness connector E03 through terminal 45 of wiring harness connector C01 fuse EF23. • ECM control ground circuit: ECM positions the terminal 1 on exhaust control valve wiring harness connector E03 to low electric potential through terminal 28 of ECM wiring harness connector E01.
P0013	Open circuit of the VVT exhaust control valve circuit	
P0015	The exhaust VVT is not in the default location when starting	
P2090	Short circuit to ground of the VVT exhaust control valve circuit	
P2091	Short circuit to power supply of the VVT exhaust control valve circuit	

2. Possible Sources

Fault Code	Test Tactics	Setting Conditions (Control Strategy)	Fault
P000B	Hardware circuit inspect	• Short to ground or open circuit • Short circuit to power supply	• Exhaust control valve circuit fault • Exhaust control valve fault • ECM
P0013			
P0015			
P2090			
P2091			

3. Diagnosis

Test Conditions	Details/Results/Actions
1. General inspection	
	A. Inspect the exhaust control valve wiring harness connector E03 for loose or poor contact. B. Check if exhaust control valve is properly installed. Is it normal? **Y** Go to step 2. **N** Repair the fault.

mashinesoft.com 09120146259

Test Conditions	Details/Results/Actions
2. Inspect the power supply line of exhaust control valve	
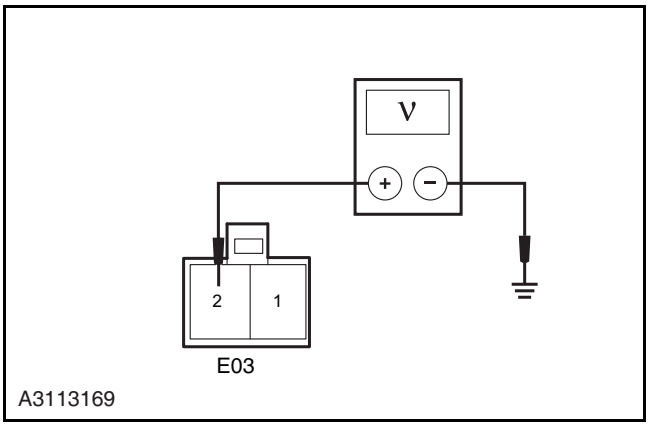	A. Turn the ignition switch to position "LOCK". B. Disconnect OCV exhaust control valve wiring harness connector E03. C. Turn the ignition switch to position "ON". D. Measure the voltage between terminal 2 of OCV exhaust control valve wiring harness connector E03 and reliable grounding. **Standard Voltage Value: 11 ~1 4 V** Is the voltage normal? **Y** Go to step 3. **N** Repair the circuit from terminal 2 of OCV exhaust control valve wiring harness connector E03 to terminal 45 of the engine compartment electric center C01 fuse EF23.
3. Inspect the ground circuit of exhaust control valve	
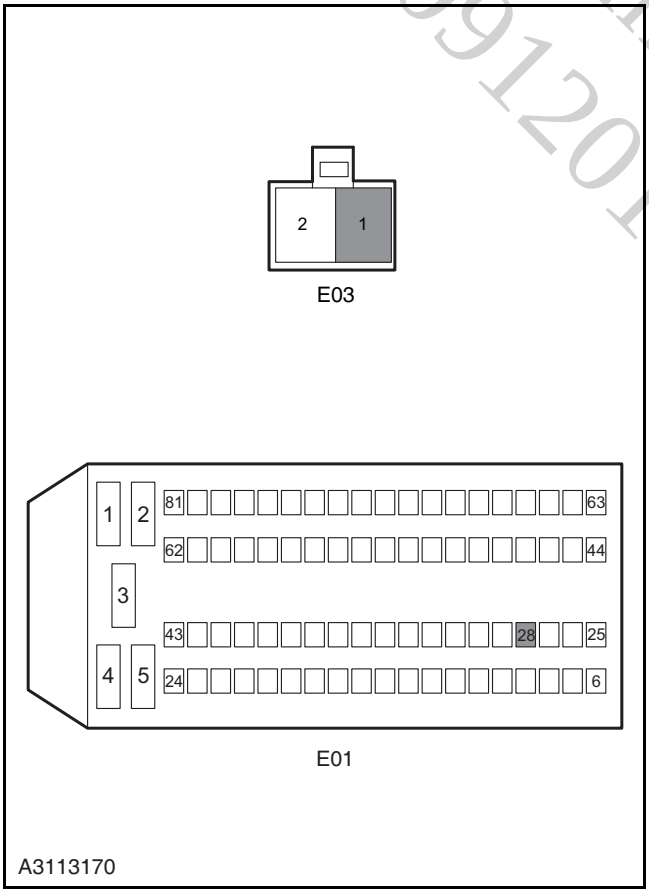	A. Turn the ignition switch to position "LOCK". B. Disconnect the battery negative cable. C. Disconnect OCV exhaust control valve wiring harness connector E03. D. Disconnect the ECM wiring harness connector E01. E. Measure the resistance between terminal 1 of OCV exhaust control valve wiring harness connector E03 and terminal 28 of ECM wiring harness connector E01. **Standard Resistance Value: less than 5 Ω** Is the resistance normal? **Y** Go to step 4. **N** Repair the circuit between the terminal 1 of OCV exhaust control valve wiring harness connector E03 and the terminal 28 of ECM wiring harness connector E01.

mashinesoft.com 09120142059

Test Conditions	Details/Results/Actions
4. Inspect the OCV exhaust control valve	
	A. Turn the ignition switch to position "LOCK". B. Replace the OCV exhaust control valve of failed vehicle. C. Turn the ignition to the "ON" position and test with diagnostic tool if DTC is cleared. Is it normal? **Y** Replace with a new OCV exhaust control valve. **N** Go to step 5.
5. Inspect the ECM power supply circuit	
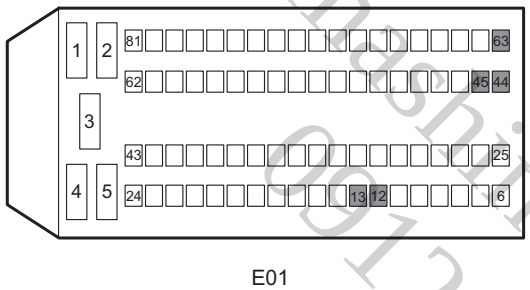 E01 A3113031	A. Turn the ignition switch to position "LOCK". B. Measure from the back of ECM wiring harness connector E01. C. Turn the ignition switch to "ON" position and use a multimeter to measure the voltage between the terminals 12, 13, 44, 45 and 63 of the ECM wiring harness connector E01 and the power supply. **Standard Voltage Value: 11 ~ 14 V** Is the voltage normal? **Y** Go to step 6. **N** Repair and inspect the ECM power supply circuit.
6. Inspect the ECM ground circuit	
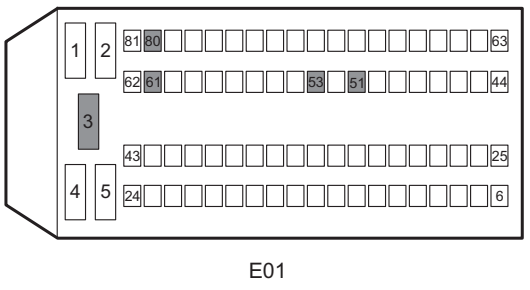 E01 A3113032	A. Turn the ignition switch to position "LOCK". B. Measure from the back of ECM wiring harness connector E01. C. Measure with a multimeter the resistance between the ECM wiring harness connector E01 terminal 3, 51, 53, 61 and 80 and the reliable grounding. **Standard Resistance Value: less than 5 Ω** Is the resistance value normal? **Y** Replace the engine control module. **Refer to: Engine Control Module (3.1.13 Electronic Control System - ME7, Removal and Installation).** **N** Inspect and repair the ECM ground circuit.

machinesoft.com 00120146259

DTC P0016, P0017

1. DTC Description

Fault Code	Description	Definition
P0016	Relative installation position of camshaft and crankshaft unreasonable	Engine control module ECM uses the crankshaft position sensor CKP and camshaft position sensor CMP pulse signal to monitor the correlation between CKP and the camshaft position. Crankshaft variable reluctance rotor has 60 teeth, and two teeth are missing and used as a reference space. Uniform spacing between each tooth is 6 °, only the reference clearance is exception and it is 12 °. Camshaft signal plate has four teeth, two are narrow, and the other two are wide. The distance between every four posterior teeth is 90 degrees.
P0017	Relative installation position of camshaft and crankshaft unreasonable	

2. Possible Sources

Fault Code	Test Tactics	Setting Conditions (Control Strategy)	Fault
P0016	Relative installation position of camshaft and crankshaft unreasonable	The difference between learning value and standard value is bigger than 15 kW. The difference between learning value and standard valve is less than 15 kW. The self - adaption of crankshaft and camshaft should be activated.	Camshaft position sensor signal unstable Camshaft position sensor signals wheel Crankshaft position sensor signal unstable Crankshaft position sensor signals wheel Camshaft position sensor fault • Crankshaft position sensor fault
P0017			

mashineoff.com 09126146259

3. Diagnosis Procedures

Test Conditions	Details/Results/Actions
1. General inspection	
	A. Inspect the camshaft position sensor wiring harness connector E18, E19, and the crankshaft position sensor wiring harness connector E07 for loose and poor contact. B. Inspect the camshaft position sensor and the crankshaft position sensor for proper installation. Is it normal? **Y** Go to step 2. **N** Repair the fault.

Test Conditions	Details/Results/Actions
2. Inspect the DTC characteristics	
	A. Use diagnostic tool to clear the DTC. B. Start the engine and run to operating temperature. Are the DTC P0016 , P0017 still there? **Y** Go to step 3. **N** Intermittent fault. **Refer to: Intermittent Fault Diagnosis (3.1.13 Electrical Control System - ME7, Symptom Diagnosis and Testing).**
3. Inspect the ignition timing	
	A. Inspect the ignition timing. **Refer to: Timing Inspection (3.1.2 Mechanical System, General Procedures).** Is the ignition timing normal? **Y** Go to step 4. **N** Adjust the ignition timing.
4. Inspect the camshaft position sensor	
	A. Use a diagnostic tool to clear the DTC. B. Replace a camshaft position sensor that in good condition, and fasten it with the standard torque. C. Start the engine and run to operating temperature. Are the DTC P0016 , P0017 still there? **Y** Go to step 5. **N** Replace the camshaft position sensor. **Refer to: Camshaft Position Sensor (3.1.13 Electrical Control System- ME7, Removal and Installation).**

mashinesoft.com 09120146159

Test Conditions	Details/Results/Actions
5. Inspect the sensor signal wheel	
	A. Inspect the camshaft position sensor signal wheel for worn attachments, or damage. Is the sensor signal wheel normal? **Y** Go to step 6. **N** Repair the fault part.
6. Inspect the crankshaft position sensor	
	A. Use a diagnostic tool to clear the DTC. B. Replace a crankshaft position sensor in good condition and tighten it to specified torque. **Refer to: Crankshaft Position Sensor (3.1.13 Electrical Control System - ME7, Removal and Installation).** C. Start the engine and run to operating temperature. Are the DTC P0016 , P0017 still there? **Y** Go to step 7. **N** Replace the crankshaft position sensor. **Refer to: Crankshaft Position Sensor (3.1.13 Electrical Control System - ME7, Removal and Installation).**

mashinesoft.com 09120146259

Test Conditions	Details/Results/Actions
7. Inspect the unstable camshaft position sensor signal	
	A. Turn the ignition switch to position "ON", engine doesn't run. B. Clear the DTC with diagnostic tool. C. Starting the engine. D. Gently tap and swing crankshaft position sensor. E. Turn the ignition switch to position "ON", engine doesn't run. F. Inspect the sensor wiring harness connector, and inspect the ECM wiring harness connector for damaged, bent, corrosion or pulled pins / terminals. G. Inspect the crankshaft position sensor circuit relative connector. Are the DTC P0016 , P0017 still there? **Y** Go to step 8. **N** Repair the fault circuit based on the inspect, replace as necessary. **Refer to: Crankshaft Position Sensor (3.1.13 Electrical Control System - ME7, Removal and Installation).**
8. Inspect the crankshaft position sensor signal wheel	
	A. Turn the ignition switch to position "LOCK". B. Rotate the flywheel, inspect the crankshaft position sensor signal wheel for worn and dirty attachments. **Y** Go to step 9. **N** Replace the crankshaft position sensor signals wheel. **Refer to: Main Bearing, Crankshaft and Cylinder Body (3.1.2 Mechanical System, Disassembly and Assembly).**

mashinesoft.com 09120146259

Test Conditions	Details/Results/Actions
9. Inspect the ECM power supply circuit	
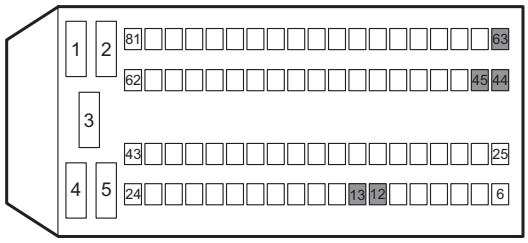 E01 A3113031	A. Turn the ignition switch to position "LOCK". B. Measure from the back of ECM wiring harness connector E01. C. Turn the ignition switch to "ON" position and use a multimeter to measure the voltage between the terminals 12, 13, 44, 45 and 63 of the ECM wiring harness connector E01 and the power supply. **Standard Voltage Value: 11 ~ 14 V** Is the voltage normal? **Y** Go to step 10. **N** Repair and inspect the ECM power supply circuit.
10. Inspect the ECM ground circuit	
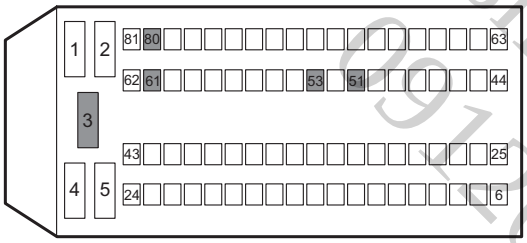 E01 A3113032	A. Turn the ignition switch to position "LOCK". B. Measure from the back of ECM wiring harness connector E01. C. Measure the resistance between the ECM wiring harness connector E01 terminal 3, 51, 53, 61 and 80 and the reliable grounding with a multimeter . **Standard Resistance Value: less than 5 Ω** Is the resistance value normal? **Y** Replace the engine control module. **Refer to: Engine Control Module (3.1.13 Electronic Control System - ME7, Removal and Installation).** **N** Inspect and repair the ECM ground circuit.

machinesoft.com 69120146259

DTC P0030, P0031, P0032, P0053

1. DTC Description

Fault Code	Description	Definition
P0030	Upstream oxygen sensor heating control circuit fault	The working voltage of pre - catalytic oxygen sensor heating coil is provided by the main relay that controlled by ECM ,when the ignition switch is turned to "ON" state, the terminal 4 of oxygen sensor connector E05 is with battery voltage. ECM controls the working time of the heater by the terminal 26 of ECM wiring harness connector E01.
P0031	Upstream oxygen sensor heating control circuit voltage too low	
P0032	Upstream oxygen sensor heating control circuit voltage too high	
P0053	Upstream oxygen sensor heating internal resistance unreasonable	

2. Possible Sources

Fault Code	Test Tactics	Setting Conditions (Control Strategy)	Fault
P0030	Hardware circuit inspect	• Open circuit • Short circuit to ground • Short circuit to power supply	• Sensor circuit fault • Sensor fault • ECM fault
P0031			
P0032			
P0053	Present resistance value is higher than the set value	• Exhaust temperature is within normal range. • When the exhaust temperature is between 250 ℃ ~ 550 ℃ (1,022 ºF). • Pre - catalytic oxygen sensor internal resistance value is higher than 1,600 Ω.	

mashinesoft.com 09120146159

3. Diagnosis Procedures

Test Conditions	Details/Results/Actions
1. General inspection	
	A. Inspect pre - catalytic oxygen sensor wiring harness connector for damage, poor contact, aging and loose. Is it normal? **Y** Go to step 2. **N** Repair the fault.

Test Conditions	Details/Results/Actions
2. Inspect the pre - catalytic oxygen sensor heater resistance value	
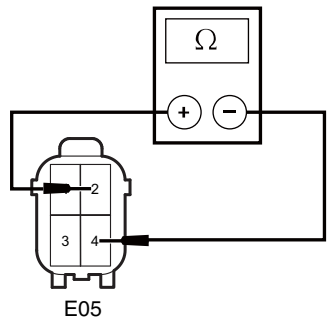 A3113041	A. Turn the ignition switch to position "LOCK". B. Disconnect the pre - catalytic oxygen sensor wiring harness connector E05. C. Measure the resistance of the heater that between terminal 2 and terminal 4 of pre - catalytic oxygen sensor wiring harness connector E05. **Standard Resistance Value: 20 ℃ (68ºF) 1 ~ 6 Ω** Is the resistance value normal? **Y** Go to step 3. **N** Replace the pre - catalytic oxygen sensor. **Refer to: Pre - Catalytic Oxygen Sensor (3.1.13 Electronic Control System - ME7, Removal and Installation).**
3. Inspect the heater working voltage	
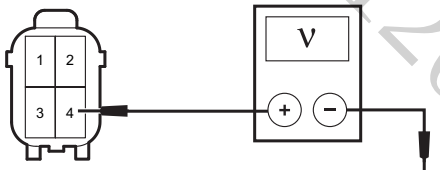 A3113042	A. Turn the ignition switch to "LOCK" position. B. Disconnect the pre - catalytic oxygen sensor wiring harness connector E05. C. Turn the ignition switch to position "ON". D. Measure the voltage between the terminal 4 of post - catalytic oxygen sensor wiring harness connector E05 and the reliable grounding. **Standard Voltage Value: 11 ~ 14 V** Is voltage normal? **Y** Go to step 5. **N** Go to step 4.
4. Inspect the the heater power supply circuit	
	A. Remove the fuse EF23 of the eengine compartment fuse and relay box C01. B. Inspect the fuse. Is the fuse normal? **Y** Repair the circuit from terminal 4 of pre - catalytic oxygen sensor wiring harness connector E05 to terminal 45 of the engine compartment electric center C01 fuse EF23. **N** Replace the fuse.
5. Inspect the heater control signal circuit	

mashinesoft.com 09120146259

Test Conditions	Details/Results/Actions
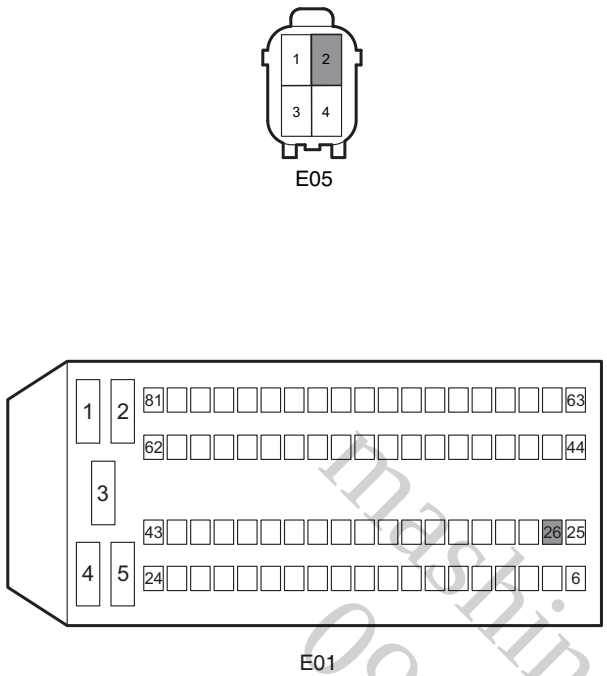 A3113043	A. Turn the ignition switch to position "LOCK". B. Disconnect the ECM wiring harness connector E01. C. Disconnect the pre - catalytic oxygen sensor wiring harness connector E05. D. Measure the resistance between the terminal 2 of pre - catalytic oxygen sensor wiring harness connector E05 and the terminal 26 of ECM wiring harness connector E01. **Standard Resistance Value: less than 5 Ω** E. Measure the voltage between the terminal 2 of pre - catalytic oxygen sensor wiring harness connector E05 and the reliable power supply. **Standard Voltage Value: 0 V** F. Measure the resistance between the terminal 2 of pre - catalytic oxygen sensor wiring harness connector E05 and the reliable grounding. **Standard Resistance Value: 10 MΩ or more** Is it normal? **Y** Go to step 6. **N** Repair the circuit faults between the terminal 2 of pre - catalytic oxygen sensor wiring harness connector E05 and the terminal 26 of ECM wiring harness connector E01.
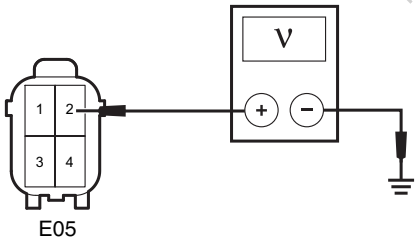 A3113044	
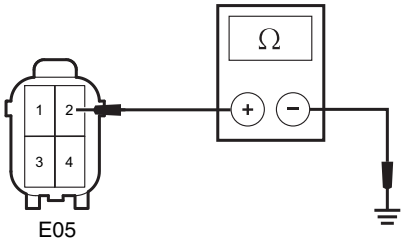 A3113045	

machinesoft.com 09120146259

Test Conditions	Details/Results/Actions
6. Inspect the ECM power supply circuit	
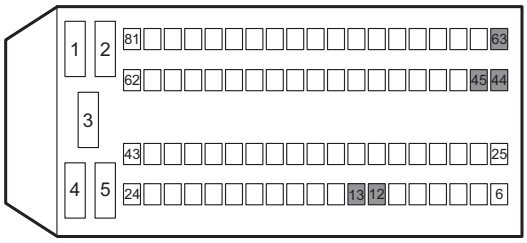 E01 A3113031	A. Turn the ignition switch to position "LOCK". B. Measure from the back of ECM wiring harness connector E01. C. Turn the ignition switch to "ON" position and use a multimeter to measure the voltage between the terminals 12, 13, 44, 45 and 63 of the ECM wiring harness connector E01 and the power supply. **Standard Voltage Value: 11 ~ 14 V** Is the voltage norma? **Y** Go to step 7. **N** Repair and inspect the ECM power supply circuit.
7. Inspect the ECM ground circuit	
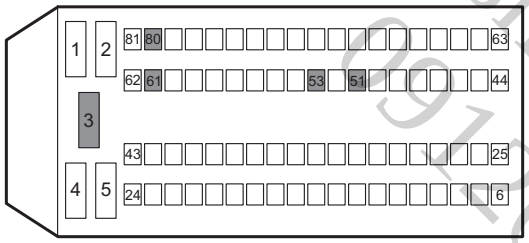 E01 A3113032	A. Turn the ignition switch to position "LOCK". B. Measure from the back of ECM wiring harness connector E01. C. Measure the resistance between the ECM wiring harness connector E01 terminal 3, 51, 53, 61 and 80 and the reliable grounding with a multimeter . **Standard Resistance Value: less than 5 Ω** Is the resistance value normal? **Y** Replace the engine control module. **Refer to: Engine Control Module (3.1.13 Electronic Control System - ME7, Removal and Installation).** **N** Inspect and repair the ECM ground circuit.

mashinesoft.com 69120146259

DTC P0036, P0037, P0038, P0054

1. DTC Description

Fault Code	Description	Definition
P0036	Downstream oxygen sensor heating control circuit fault	The working voltage of post - catalytic oxygen sensor heating coil is provided by the main relay that controlled by ECM, when the ignition switch is turned to "ON" state, the terminal 4 of oxygen sensor wiring harness connector E08 is with battery voltage. ECM controls the working time of the heater by the terminal 25 of ECM wiring harness connector E01.
P0037	Downstream oxygen sensor heating control circuit voltage too low	
P0038	Downstream oxygen sensor heating control circuit voltage too high	
P0054	Downstream oxygen sensor heating internal resistance unreasonable	

2. Possible Sources

Fault Code	Test Tactics	Setting Conditions (Control Strategy)	Fault
P0036	Hardware circuit inspect	• Open circuit • Short circuit to ground • Short circuit to power	• Sensor circuit fault • Sensor fault • ECM
P0037			
P0038			
P0054	Present resistance value is higher than the set value	• Exhaust temperature is within normal range. • The current temperature is between 250 ℃ to 550 ℃ • Pre - catalytic oxygen sensor internal resistance value is higher than 2,200 Ω	

mashinesoft.com 09120146299

3. Diagnosis Procedures

Test Conditions	Details/Results/Actions
1. General inspection	
	A. Inspect the post - catalytic oxygen sensor wiring harness connector for damage, poor contact, aging and loose. Is it normal? **Y** Go to step 2. **N** Repair the fault.

Test Conditions	Details/Results/Actions
2. Inspect the post - catalytic oxygen sensor heater resistance value	
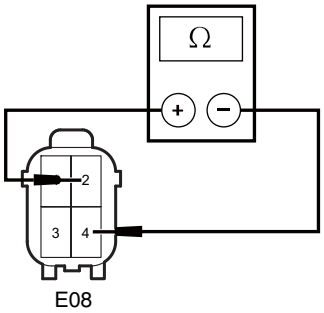 A3113046	A. Turn the ignition switch to "LOCK" position. B. Disconnect the post - catalytic oxygen sensor wiring harness connector E08. C. Measure the resistance value of the heater that between terminal 2 and terminal 4 of post - catalytic oxygen sensor wiring harness connector E08. **Standard Resistance Value: 20 ℃ (68ºF) 1 ~ 6 Ω** Is the resistance value normal? **Y** Go to step 3. **N** Replace the post - catalytic oxygen sensor. **Refer to: Post - Catalytic Oxygen Sensor (3.1.13 Electronic Control System - ME7, Removal and Installation).**
3. Inspect the heater working voltage	
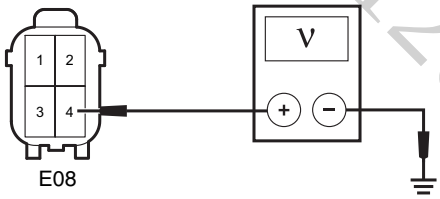 A3113047	A. Turn the ignition switch to position "LOCK". B. Disconnect the post - catalytic oxygen sensor wiring harness connector E08. C. Turn the ignition switch to position "ON". D. Measure the voltage between the terminal 4 of post - catalytic oxygen sensor wiring harness connector E08 and the reliable grounding. **Standard Voltage Value: 11 ~ 14 V** Is voltage normal? **Y** Go to step 5. **N** Go to step 4.
4. Inspect the heater power supply circuit	
	A. Remove the fuse EF23 of the eengine compartment fuse and relay box C01. B. Inspect the fuse. Is the fuse normal? **Y** Repair the circuit from terminal 4 of post - catalytic oxygen sensor wiring harness connector E08 to terminal 45 of the engine compartment electric center C10 ER23. **N** Replace the fuse.
5. Inspect the heater control signal circuit	

mashinesoft.com 09120146259

Test Conditions	Details/Results/Actions
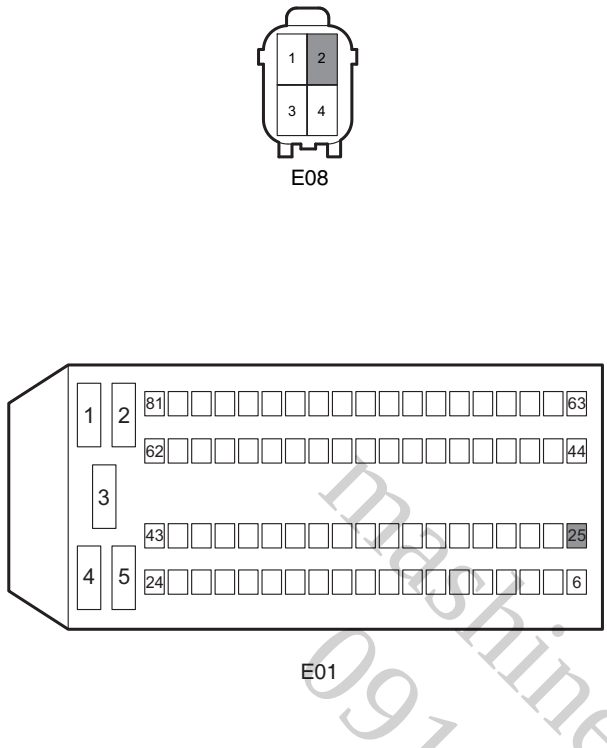 A3113048	A. Turn the ignition switch to position "LOCK". B. Disconnect the ECM wiring harness connector E01. C. Disconnect the post - catalytic oxygen sensor wiring harness connector E08. D. Measure the resistance between the terminal 2 of post - catalytic oxygen sensor wiring harness connector E08 and the terminal 25 of ECM wiring harness connector E01. **Standard Resistance Value: less than 5 Ω** E. Measure the voltage between the terminal 2 of post - catalytic oxygen sensor wiring harness connector E08 and the reliable power supply. **Standard Voltage Value: 0 V** F. Measure the resistance between the terminal 2 of post - catalytic oxygen sensor wiring harness connector E08 and the reliable grounding. **Standard Resistance Value: 10 MΩ or more** Is it normal? **Y** Go to step 6. **N** Repair the circuit faults between the terminal 2 of post - catalytic oxygen sensor wiring harness connector E08 and the terminal 25 of ECM wiring harness connector E01.
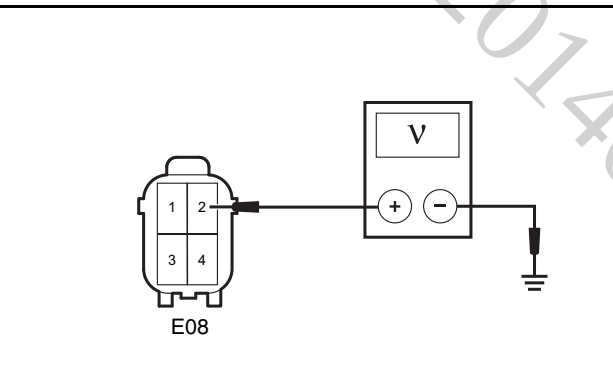 A3113049	
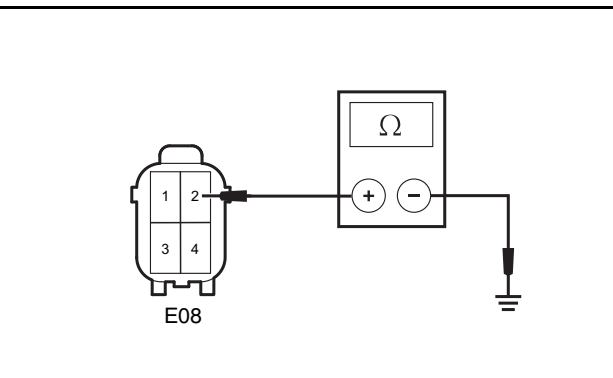 A3113050	

machinesoft.com 09120146259

Test Conditions	Details/Results/Actions
6. Inspect the ECM power supply circuit	
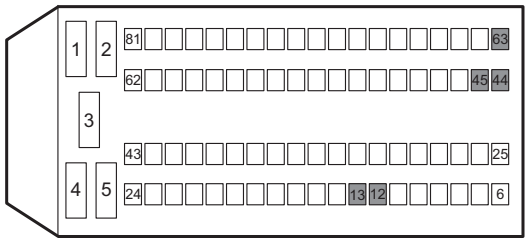 E01 A3113031	A. Turn the ignition switch to position "LOCK". B. Measure from the back of ECM wiring harness connector E01. C. Turn the ignition switch to "ON" position and use a multimeter to measure the voltage between the terminals 12, 13, 44, 45 and 63 of the ECM wiring harness connector E01 and the power supply. **Standard Voltage Value: 11 ~ 14 V** Is the voltage normal? **Y** Go to step 7. **N** Repair and inspect the ECM power supply circuit.
7. Inspect the ECM ground circuit	
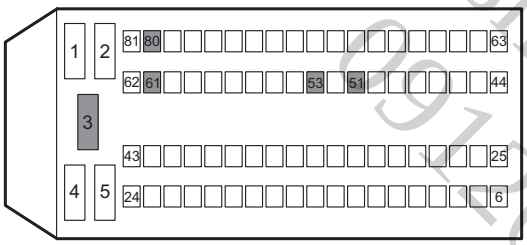 E01 A3113032	A. Turn the ignition switch to position "LOCK". B. Measure from the back of ECM wiring harness connector E01. C. Measurethe the resistance between the ECM wiring harness connector E01 terminal 3, 51, 53, 61 and 80 and the reliable grounding with a multimeter . **Standard Resistance Value: less than 5 Ω** Is the resistance value normal? **Y** Replace the engine control module. **Refer to: Engine Control Module (3.1.13 Electronic Control System - ME7, Removal and Installation).** **N** Inspect and repair the ECM ground circuit.

mashinesoft.com 09120146259

DTC P0105, P0106, P0107, P0108

1. DTC Description

Fault Code	Description	Definition
P0105	No fluctuation of air intake pressure sensor signal	The intake pressure temperature sensor has four terminals, when the ignition switch is turned to "ON" position, the engine control module through terminal 33 on connector E01 to provide 5 V voltage for the sensor terminal 3, the terminal 17 of E01 enable the sensor terminal 1 grounding, the sensor terminal 4 provides an signal that follow the changes of intake pressure to terminal 37 of the ECM connector E01.
P0106	Unreasonable intake pressure sensor / barometric pressure sensor	
P0107	Air intake pressure sensor short circuit to ground	
P0108	Air intake pressure sensor short circuit to power supply	

Possible Sources

Fault Code	Test Tactics	Setting Conditions (Control Strategy)	Fault
P0105	Hardware or Circuit Inspection	• Engine speed greater than 800 rPM • After start, pressure drop less than 1 kPa • Last for more than 1 s	• Sensor circuit fault • Sensor fault • ECM fault
P0106		• Depending on engine speed and throttle opening	
P0107		Pressure sensor voltage is less than 0.195 V for more than 1s.	
P0108		After it is started, intake pressure sensor voltage is greater than 4.95 V for over 1 s.	

mashinesoft.com 09120146259

3. Diagnosis Procedures

Test Conditions	Details/Results/Actions
1. General inspection	
	A. Inspect for the following items: • Sensor cover is damaged, vacuum pipe cracks. • Sensor sealing is damaged • Sensor loose or improper installation • Sensor vacuum pipe is blocked. Is it normal? **Y** Go to step 2. **N** Repair the fault.
2. Inspect the intake pressure sensor power supply voltage	
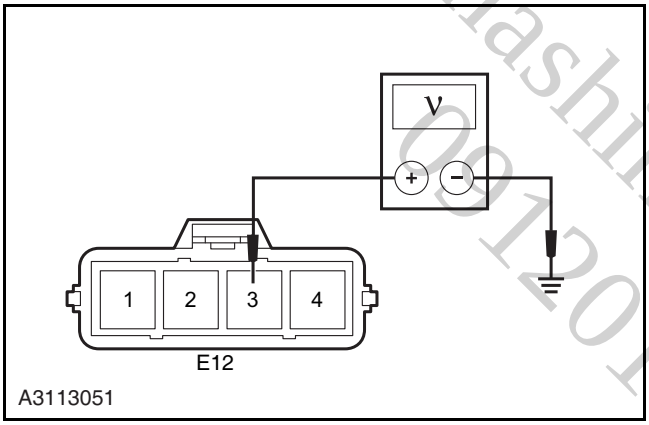	A. Turn the ignition switch to position "LOCK". B. Disconnect the intake pressure temperature sensor wiring harness connector E12. C. Turn the ignition switch to position "ON". D. Measure the voltage between the terminal 3 of intake pressure temperature sensor wiring harness connector E12 and the reliable grounding. **Standard Voltage Value: 4.5 ~ 5.5 V** Is the voltage normal? **Y** Go to step 4. **N** Go to step 3.
3. Inspect the air intake pressure sensor power supply circuit	

machinesoft.com 09120146259

Test Conditions	Details/Results/Actions
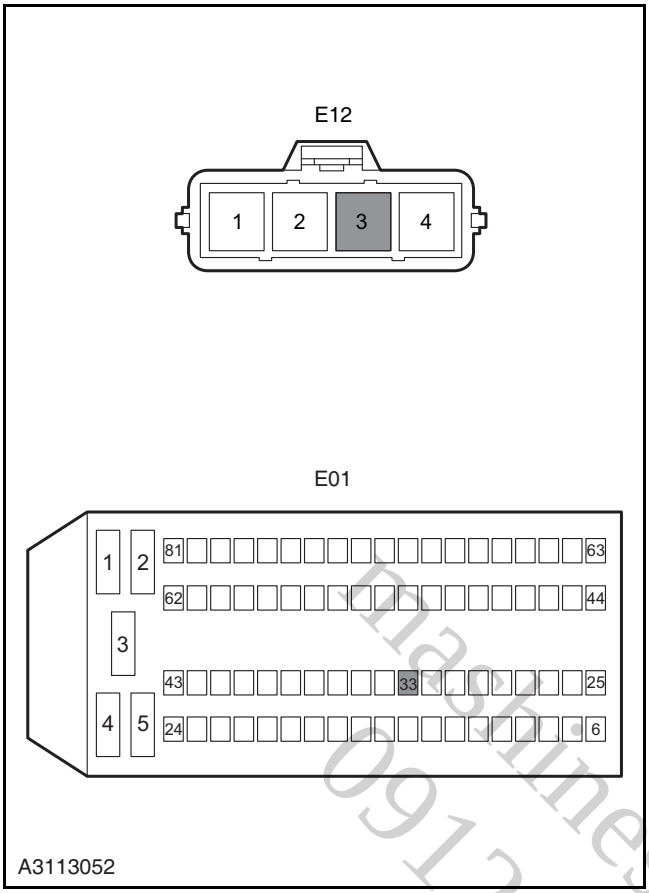	A. Turn the ignition switch to position "LOCK". B. Disconnect the battery negative cable. C. Disconnect the intake pressure temperature sensor wiring harness connector E12. D. Disconnect the ECM wiring harness connector E01. E. Measure the resistance between terminal 3 of intake pressure temperature sensor connector E12 and terminal 33 of ECM wring harness connector E01. **Standard Resistance Value: less than 5 Ω** F. Measure the resistance between the terminal 3 of intake pressure temperature sensor wiring harness connector E12 and reliable grounding. **Standard Resistance Value: 10 MΩ or more** G. Measure the voltage between the terminal 3 of intake pressure temperature sensor wiring harness connector E12 and the reliable grounding. **Standard Voltage Value: 0 V** Are the resistance and voltage above normal? **Y** Go to step 5. **N** Repair the fault circuit, inspect the system for normal working.
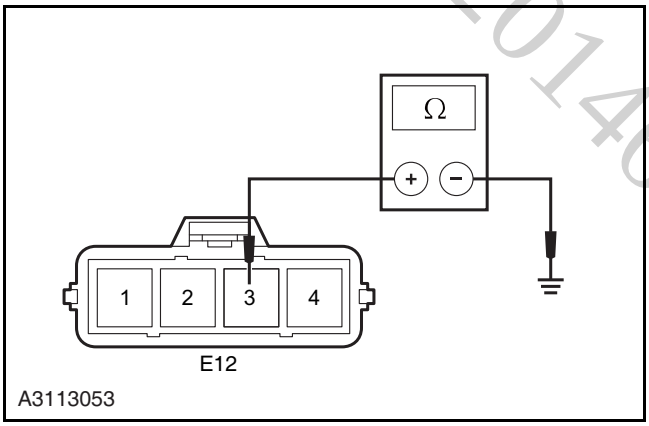	
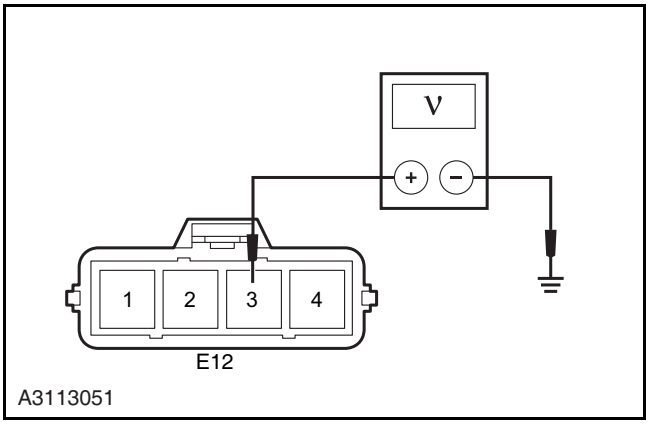	

machinesoft.com 09120146259

Test Conditions	Details/Results/Actions
4. Inspect the air intake pressure sensor grounding	
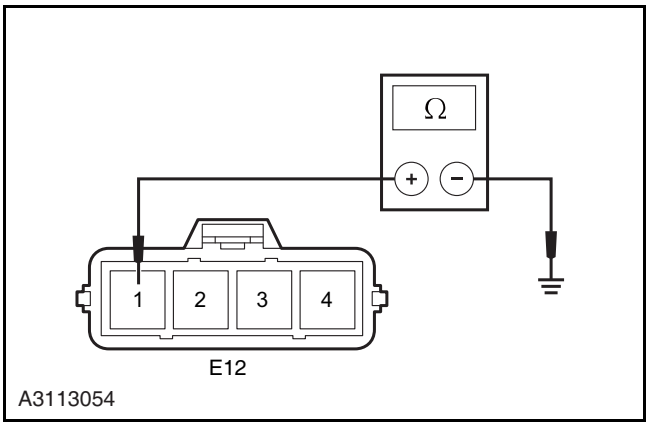	A. Turn the ignition switch to LOCK position. B. Disconnect the intake pressure temperature sensor wiring harness connector E12. C. Turn the ignition switch to position "ON". D. Measure the resistance value between the terminal 1 of intake pressure temperature sensor wiring harness connector E12 and reliable grounding. **Standard Resistance Value: less than 5 Ω** Is the resistance value normal? **Y** Go to step 6. **N** Go to step 5.
5. Inspect the air intake pressure sensor ground circuit	

mashinesoft.com 09120146259

Test Conditions	Details/Results/Actions
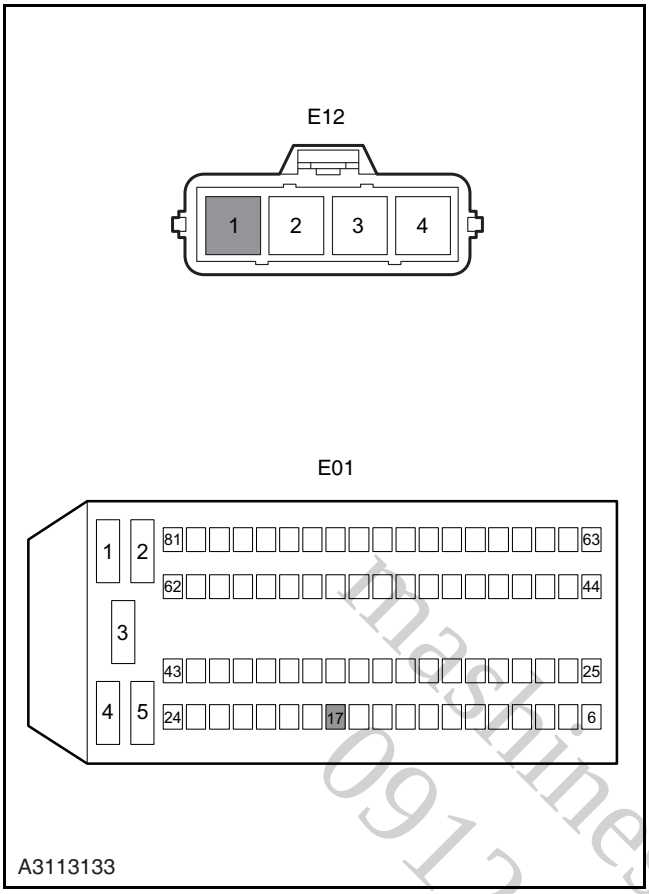	A. Turn the ignition switch to position "LOCK". B. Disconnect the battery negative cable. C. Disconnect the intake pressure temperature sensor wiring harness connector E12. D. Disconnect the ECM wiring harness connector E01. E. Measure the resistance between terminal 1 of intake pressure temperature sensor wiring harness connector E12 and terminal 17 of ECM wiring harness connector E01. **Standard Resistance Value: less than 5 Ω** F. Measure the voltage between the terminal 1 of intake pressure temperature sensor wiring harness connector E12 and the reliable grounding. **Standard Voltage Value: 0 V** G. Measure the resistance value between the terminal 1 of intake pressure temperature sensor wiring harness connector E12 and reliable grounding. **Standard Resistance Value: less than 5 Ω** Are the resistance and voltage normal? **Y** Go to step 6. **N** Repair the fault circuit.
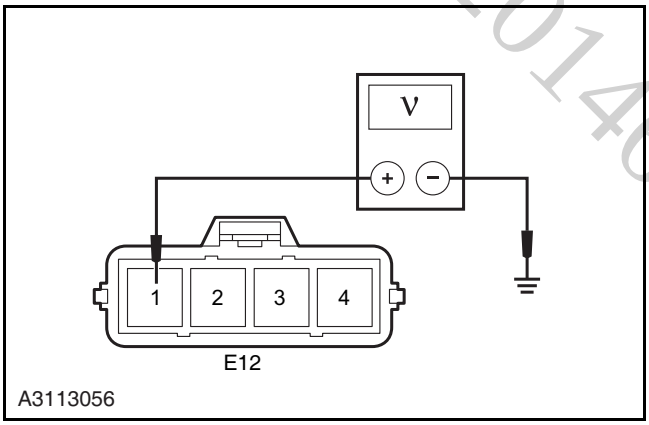	
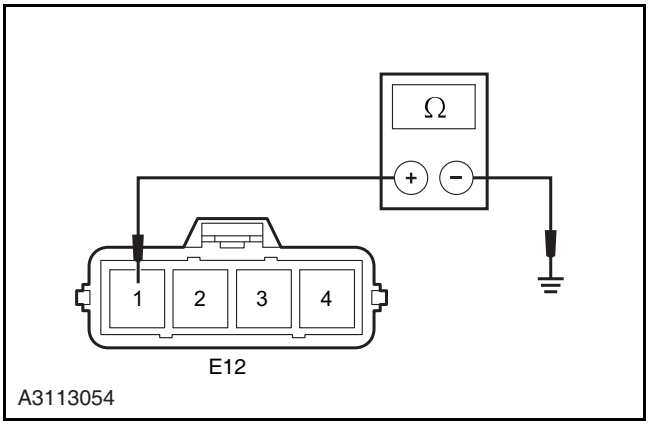	

machinesoft.com 09120146259

Test Conditions	Details/Results/Actions
6. Inspect the intake pressure sensor	
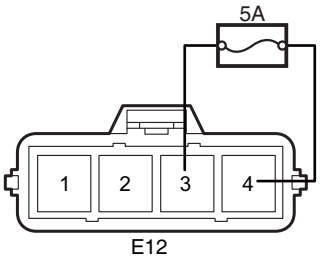 A3113057	A. Turn the ignition switch to position "LOCK". B. Disconnect the intake pressure temperature sensor wiring harness connector E12. C. Connect a jumper with 5 A fuse between the terminals 3 and 4 of E12. D. Turn the ignition switch to position "ON". E. Connect the diagnostic tool, access to engine data stream, read the "actual manifold absolute pressure" parameter. **Standard Parameter: 1,050 kPa** Is the data normal? **Y** Replace the air intake pressure sensor. **Refer to: Intake Pressure Sensor (3.1.13 Electronic Control System - ME7, Removal and Installation).** **N** Go to step 7.
7. Inspect the intake pressure sensor signal circuit	

mashinesoft.com 09120146259

Test Conditions	Details/Results/Actions
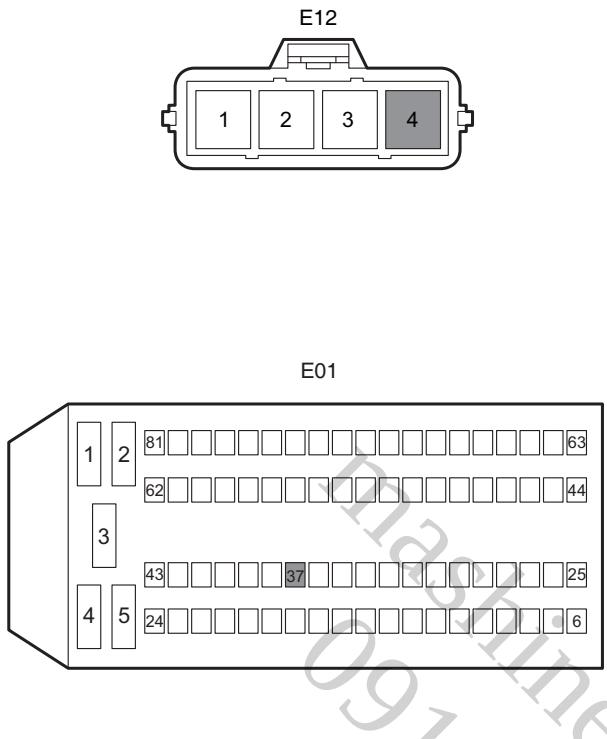 A3113058	A. Turn the ignition switch to position "LOCK". B. Disconnect the battery negative cable. C. Disconnect the intake pressure temperature sensor wiring harness connector E12. D. Disconnect the ECM wiring harness connector E01. E. Measure the resistance between terminal 4 of intake pressure temperature sensor wiring harness connector E12 and terminal 37 of ECM wiring harness connector E01. **Standard Resistance Value: less than 5 Ω** F. Measure the resistance value between the terminal 4 of intake pressure temperature sensor wiring harness connector E12 and reliable grounding. **Standard Resistance Value: 10 MΩ or more** G. Measure the voltage between the terminal 4 of intake pressure temperature sensor wiring harness connector E12 and the reliable grounding. **Standard Voltage Value: 0 V** Are the voltage and resistance normal? **Y** Go to step 8. **N** Repair the circuit.
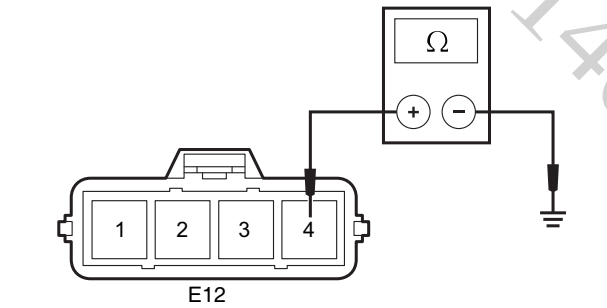 A3113059	
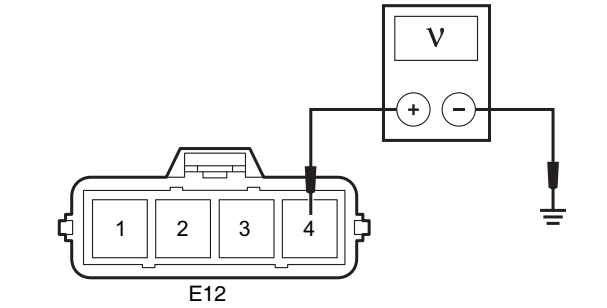 A3113060	

machinesoft.com 09120146259

Test Conditions	Details/Results/Actions
8. Inspect the ECM power supply circuit	
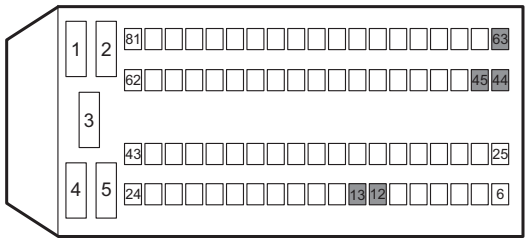 E01 A3113031	A. Turn the ignition switch to position "LOCK". B. Measure from the back of ECM wiring harness connector E01. C. Turn the ignition switch to "ON" position and use a multimeter to measure the voltage between the terminals 12, 13, 44, 45 and 63 of the ECM wiring harness connector E01 and the power supply. **Standard Voltage Value: 11 ~ 14 V** Is the voltage normal? **Y** Go to step 9. **N** Repair and inspect the ECM power supply circuit.
9. Inspect the ECM ground circuit	
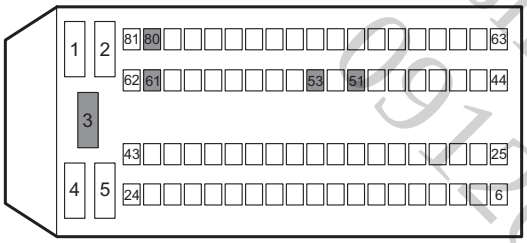 E01 A3113032	A. Turn the ignition switch to position "LOCK". B. Measure from the back of ECM wiring harness connector E01. C. Measure the resistance between the ECM wiring harness connector E01 terminal 3, 51, 53, 61 and 80 and the reliable grounding with a multimeter . **Standard Resistance Value: less than 5 Ω** Is the resistance value normal? **Y** Replace the engine control module. **Refer to: Engine Control Module (3.1.13 Electronic Control System - ME7, Removal and Installation).** **N** Inspect and repair the ECM ground circuit.

machinesoft.com 69120146259

DTC P0112, P0113

1. DTC Description

Fault Code	Description	Definition
P0112	Air intake temperature sensor signal voltage is too low	The air intake temperature sensor is integrated in the engine air intake pressure and temperature sensors to measure the temperature of the air that goes into the engine. ECM internal pressure regulator circuit provides 5V reference voltage to terminal 2 of intake pressure and temperature sensor wiring harness connector E12 through terminal 42 of ECM wiring harness connector E01. The air intake temperature voltage - drop signal can be obtained in this circuit. Place terminal 1 of intake pressure temperature sensor E12 on low potential by terminal 17 of E01.
P0113	Air intake temperature sensor signal circuit voltage is too high	

2. Possible Sources

Fault Code	Test Tactics	Setting Conditions (Control Strategy)	Fault
P0112	Hardware or circuit inspection	Air intake temperature is higher than 128.25 ℃ .	• Sensor circuit fault • Sensor fault • ECM fault
P0113		Air intake temperature less than -38.25 ℃	

mashinesoft.com 09120146259

3. Diagnosis Procedures

Test Conditions	Details/Results/Actions
1. General inspection	
	A. Inspect for the following items: • Sensor cover is damaged,vacuum pipe cracks. • Sensor sealing is damaged • Sensor loose or improper installation • Sensor vacuum pipe is blocked. Is it normal? **Y** Go to step 2. **N** Repair the fault.
2. Inspect the intake temperature sensor signal circuit	

Test Conditions	Details/Results/Actions
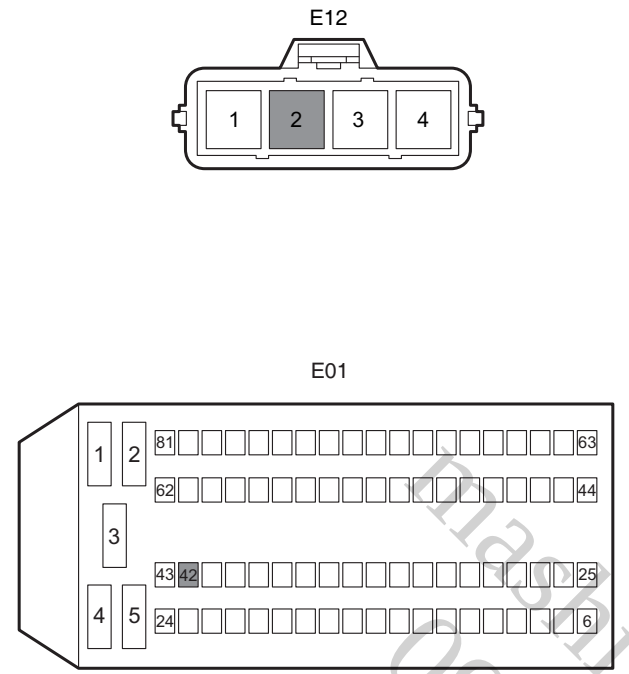 A3113162	A. Turn the ignition switch to position "LOCK". B. Disconnect the battery negative cable. C. Disconnect the intake pressure temperature sensor wiring harness connector E12. D. Disconnect the ECM wiring harness connector E01. E. Measure the resistance between terminal 2 of intake pressure temperature sensor connector E12 and terminal 42 of ECM wring harness connector E01. **Standard Resistance Value: less than 5 Ω** F. Measure the resistance value between the terminal 2 of intake pressure temperature sensor wiring harness connector E12 and reliable grounding. **Standard Resistance Value: 10 MΩ or more** G. Measure the voltage between the terminal 2 of intake pressure temperature sensor wiring harness connector E12 and the reliable grounding. **Standard Voltage Value: 0 V** Are the resistance and voltage above normal? **Y** Go to step 3 **N** Repair the fault circuit, inspect the system for normal working.
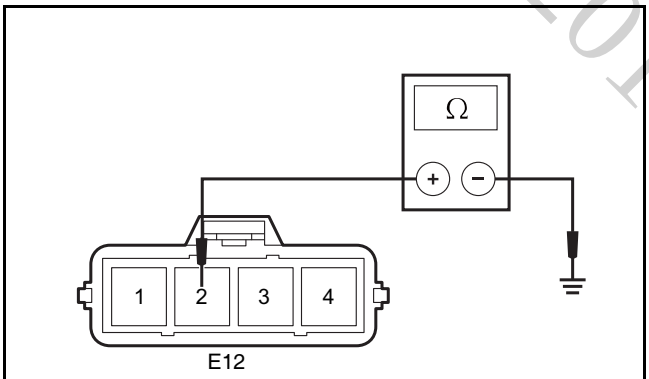 A3113062	
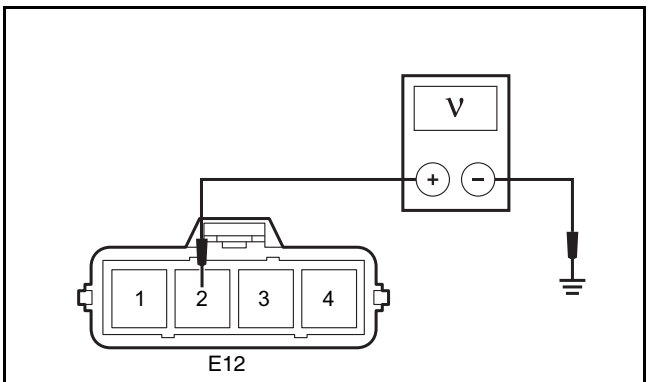 A3113063	

machinesoft.com 09120146259

Test Conditions	Details/Results/Actions
3. Inspect the intake temperature sensor grounding	
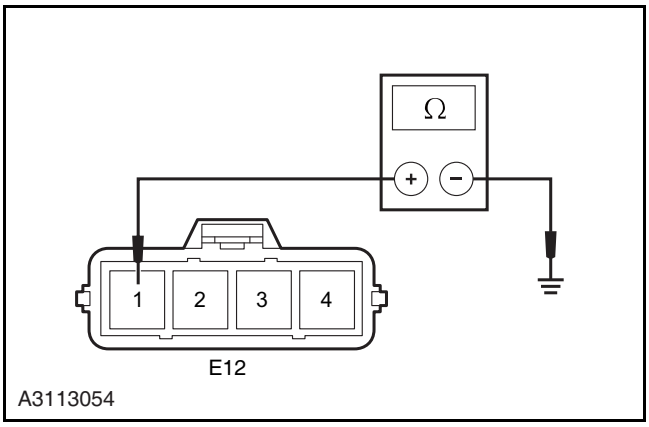	A. Turn the ignition switch to position "LOCK". B. Disconnect the intake pressure temperature sensor wiring harness connector E12. C. Turn the ignition switch to position "ON". D. Measure the resistance value between the terminal 1 of intake pressure temperature sensor wiring harness connector E12 and reliable grounding. **Standard Resistance Value: less than 5 Ω** Is the resistance value normal? **Y** Go to step 5. **N** Go to step 4.
4. Inspect the intake temperature sensor ground circuit	

mashinesoft.com 09120146259

Test Conditions	Details/Results/Actions
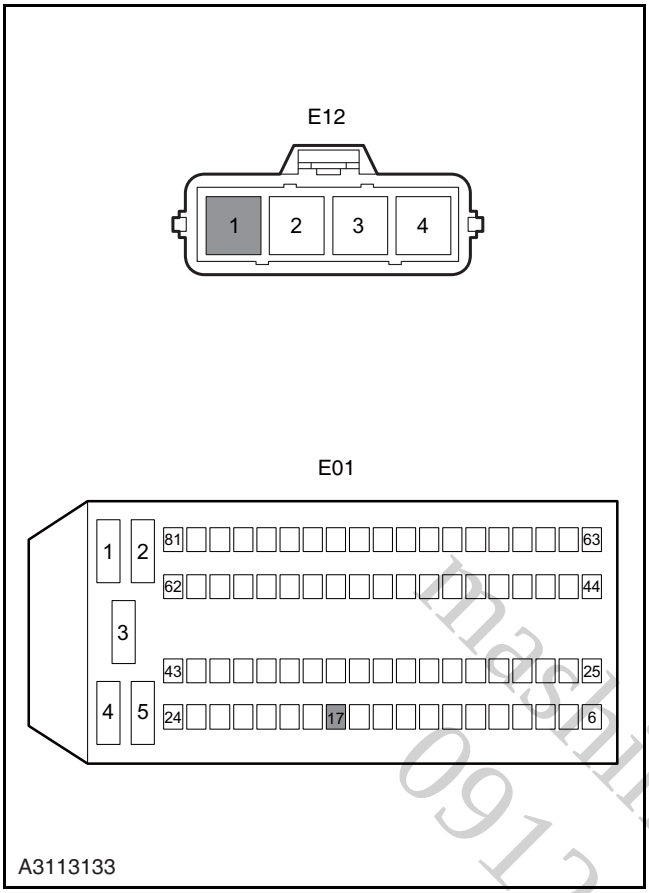	A. Turn the ignition switch to position "LOCK". B. Disconnect the battery negative cable. C. Disconnect the intake pressure temperature sensor wiring harness connector E12. D. Disconnect the ECM wiring harness connector E01. E. Measure the resistance between terminal 1 of intake pressure temperature sensor wiring harness connector E12 and terminal 17 of ECM wiring harness connector E01. **Standard Resistance Value: less than 5 Ω** F. Measure the voltage between the terminal 1 of intake pressure temperature sensor wiring harness connector E12 and the reliable grounding. **Standard Voltage Value: 0 V** G. Measure the resistance value between the terminal 1 of intake pressure temperature sensor wiring harness connector E12 and reliable grounding. **Standard Resistance Value: less than 5 Ω** Are the resistance and voltage normal? **Y** Go to step 5. **N** Repair the fault circuit.
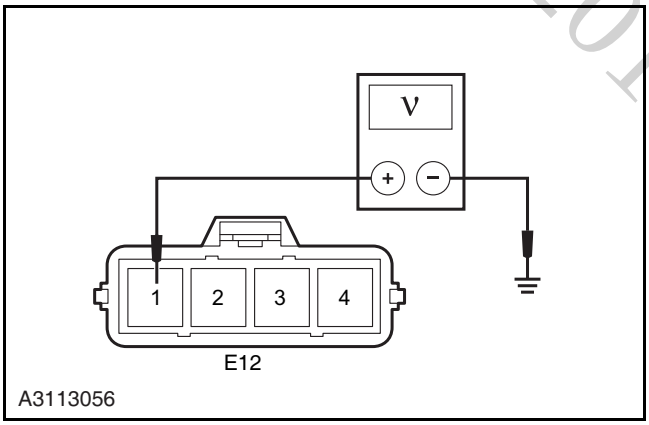	
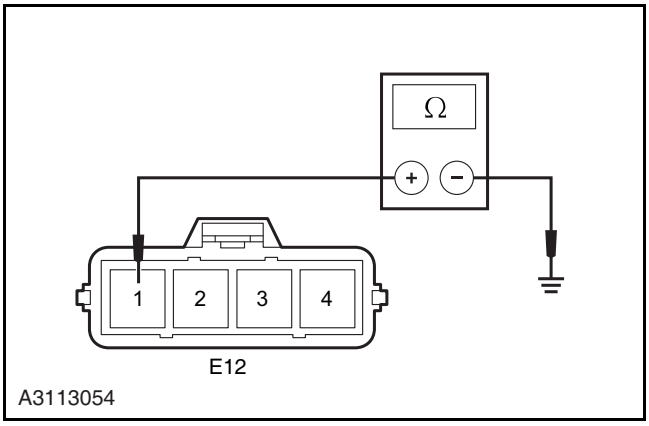	

machinesoft.com 09120146259

Test Conditions	Details/Results/Actions
5. Inspect the intake temperature sensor resistance	
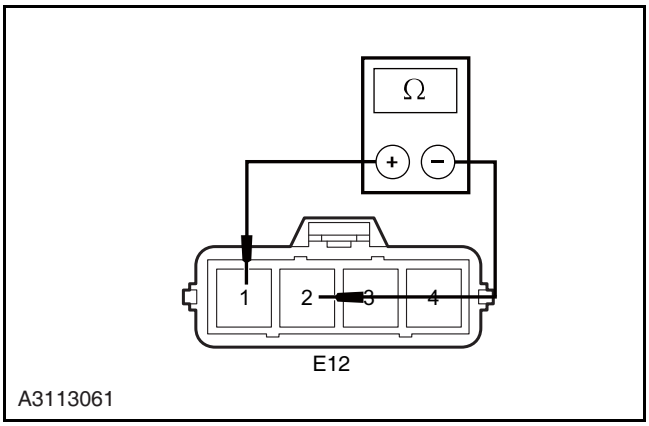	A. Turn the ignition switch to position "LOCK". B. Disconnect the intake pressure temperature sensor wiring harness connector E12. C. Measure the resistance between terminal 1 and terminal 2 of intake temperature sensor wiring harness connector E12. **Standard Resistance Value: 20 ℃ (68ºF) Rated resistance 2.375 ~ 2.625 kΩ** Is it normal? **Y** Go to step 6. **N** Replace the air intake pressure temperature sensor.
6. Inspect the ECM power supply circuit	
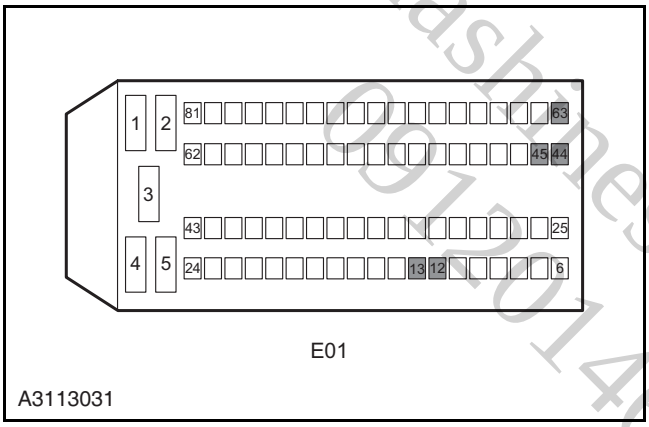	A. Turn the ignition switch to position "LOCK". B. Measure from the back of ECM wiring harness connector E01. C. Turn the ignition switch to "ON" position and use a multimeter to measure the voltage between the terminals 12, 13, 44, 45 and 63 of the ECM wiring harness connector E01 and the power supply. **Standard Voltage Value: 11 ~ 14 V** Is the voltage normal? **Y** Go to step 7. **N** Repair and inspect the ECM power supply circuit.

mashmesoft.com 09120146259

Test Conditions	Details/Results/Actions
7. Inspect the ECM ground circuit	
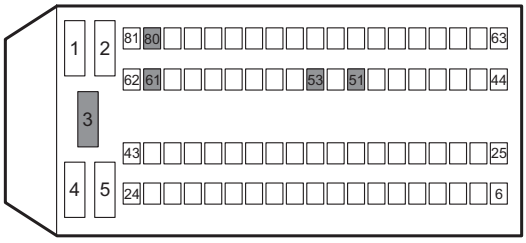 E01 A3113032	A. Turn the ignition switch to position "LOCK". B. Measure from the back of ECM wiring harness connector E01. C. Measure with a multimeter the resistance between the ECM wiring harness connector E01 terminal 3, 51, 53, 61 and 80 and the reliable grounding. **Standard Resistance Value: less than 5 Ω** Is the resistance value normal? **Y** Replace the engine control module. **Refer to: Engine Control Module (3.1.13 Electronic Control System - ME7, Removal and Installation).** **N** Inspect and repair the ECM ground circuit.

mashinesoft.com 09120146259

DTC P0117 and P0118

1. DTC Description

Fault code	Description	Definition
P0117	Engine coolant temperature sensor voltage is too low	ECT sensor is a variable resistor with negative temperature coefficient for measuring the engine coolant temperature. ECM provides 5 V voltage to the terminal 2 of the ECT sensor harness connector E22 through terminal 39 of ECM wiring harness connector E01, and get ECT signals from terminal 39 of E01. Place terminal 1 of intake pressure temperature sensor E22 on low potential by terminal 17 of E01.
P0118	Engine coolant temperature sensor voltage too high	

2. Possible Sources

Fault Code	Test Tactics	Setting Conditions (Control Strategy)	Fault
P0117	Exceeding upper limit, short circuit to ground	Coolant temperature measured value is higher than 138 ℃	• Sensor circuit fault • Sensor fault • ECM fault
P0118	Exceeding lower limit, short circuit to power supply or open circuit	Coolant temperature measured value is less than -38.25 ℃ .	

mashinesoft.com 89120146259

3. Diagnosis Procedures

Warning: Refer to Warning and Notice (3.1.4 Cooling System, General Procedures).

CAUTION: Before the diagnostic procedure, observe the list of diagnostic data, analysis the accuracy of the data for quick troubleshooting.

CAUTION: It is not recommended at any time of flammable coolant, such as alcohol. Flammable coolant can cause serious fire.

Test Conditions	Details/Results/Actions
1. General inspection	
	A. Inspect whether the engine water temperature sensor is with the signs of corrosion, and whether the coolant is leaking through the engine sensor. B. Inspect if the level of the engine coolant in engine cooling system stock tank is correct. C. Inspect the sensor for loose or improper installation. Is it normal? **Y** Go to step 2. **N** Repair the fault.

Test Conditions	Details/Results/Actions
2. Inspect the water temperature sensor resistance	
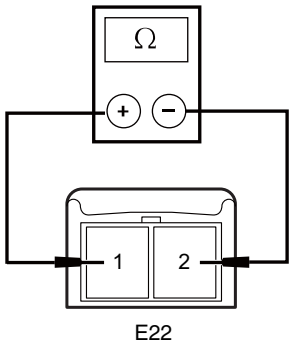 A3113064	A. Turn the ignition switch to position "LOCK". B. Disconnect the water temperature sensor wiring harness connector E22. C. Measure the resistance between terminal 1 and terminal 2 of water temperature sensor wiring harness connector E22. **Standard Resistance Value: 20 ℃ (68ºF) Rated resistance 2.37 ~ 2.63 kΩ** Is it normal? **Y** Go to step 3. **N** Replace the water temperature sensor.
3. Inspect the water temperature sensor signal circuit	
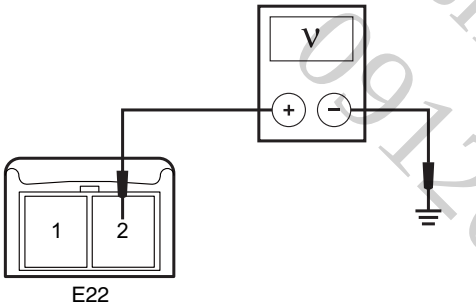 A3113065	A. Turn the ignition switch to position "LOCK". B. Disconnect the water temperature wiring harness connector E22, and turn the ignition switch to the "ON " position. C. Measure the voltage between terminal 2 of water temperature sensor wiring harness connector E22 and the reliable grounding. **Standard Voltage Value: 4.7 ~ 5.5 V** Is the voltage normal? **Y** Go to step 4. **N** Repair the fault circuit between terminal 2 of water temperature sensor connector E22 and terminal 39 of ECM wiring harness connector E01.

mashinesoft.com 0912014625

Test Conditions	Details/Results/Actions
4. Inspect the water temperature sensor grounding	
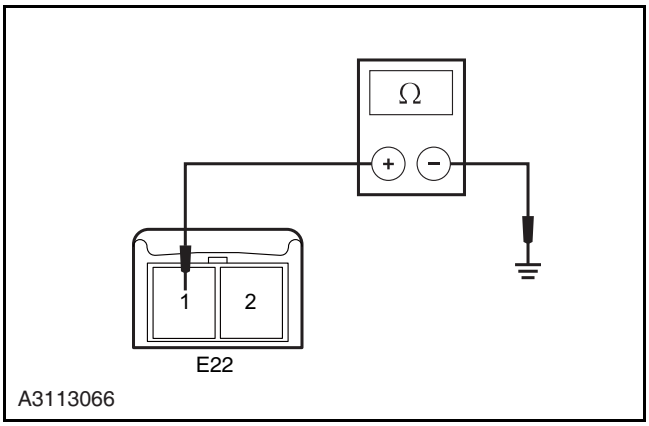	A. Turn the ignition switch to position "LOCK". B. Disconnect the water temperature sensor wiring harness connector E22 and measure the resistance value between terminal 1 of the water temperature sensor wiring harness wiring harness connector E22 and reliable grounding. **Standard Resistance Value: 10 MΩ or more** C. Turn the ignition switch to position "ON". D. Measure the resistance value between terminal 1 of water temperature sensor connector E22 and the reliable grounding. **Standard Resistance Value: less than 5Ω** Is the resistance value normal? **Y** Go to step 5. **N** Repair the fault circuit between terminal 1 of water temperature sensor wiring harness connector E22 and terminal 17 of ECM wiring harness connector E01.
5. Inspect the ECM power supply circuit	
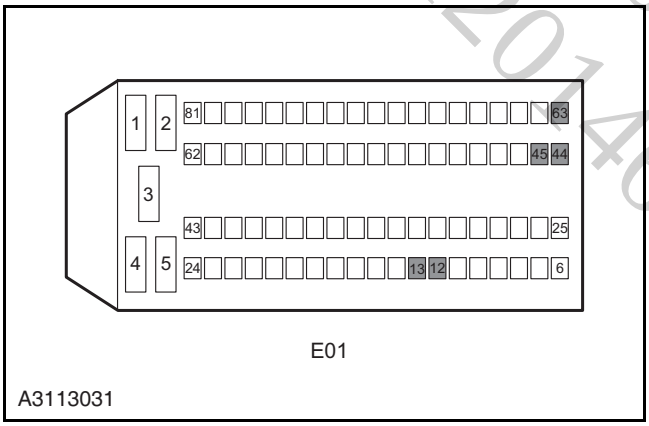	A. Turn the ignition switch to position "LOCK". B. Measure from the back of ECM wiring harness connector E01. C. Turn the ignition switch to "ON" position and use a multimeter to measure the voltage between the terminals 12, 13, 44, 45 and 63 of the ECM wiring harness connector E01 and the power supply. **Standard Voltage Value: 11 ~ 14 V** Is the voltage normal? **Y** Go to step 6. **N** Repair and inspect the ECM power supply circuit.

mashinesoft.com 0912014629

Test Conditions	Details/Results/Actions
6. Inspect the ECM ground circuit	
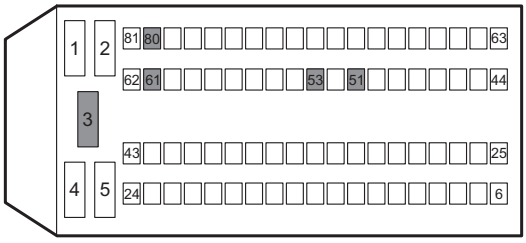 E01 A3113032	A. Turn the ignition switch to position "LOCK". B. Measure from the back of ECM wiring harness connector E01. C. Measure the resistance between the ECM wiring harness connector E01 terminal 3, 51, 53, 61 and 80 and the reliable grounding with a multimeter. **Standard Resistance Value: less than 5 Ω** Is the resistance value normal? **Y** Replace the engine control module. **Refer to: Engine Control Module (3.1.13 Electronic Control System - ME7, Removal and Installation).** **N** Inspect and repair the ECM ground circuit.

mashinesoft.com 09120146259

DTC P0121, P0122, P0123

1. DTC Description

Fault Code	Description	Definition
P0121	Electrical throttle position sensor signal 1 unreasonable	• ECM provides 5V reference voltage to terminal 3 of TPS sensor wiring harness connector E23 through terminal 32 of wiring harness connector E01. • TPS provides sensor signal voltage to terminal 54 of ECM wiring harness connector E01 through terminal 6 of wiring harness connector E23. • ECM positions terminal 2 of TPS sensor wiring harness connector E23 at low electrical potential through terminal 78 of wiring harness connector E01.
P0122	Electrical throttle position sensor signal 1 circuit voltage too low	
P0123	Electrical throttle position sensor signal 1 circuit voltage too high	

2. Possible Sources

Fault Code	Test Tactics	Setting Conditions (Control Strategy)	Fault
P0121	Throttle position sensor 1 and the throttle position sensor 2 is inconsistent, more than the specified value, or throttle position sensor 1 and the expected value is inconsistent, more than the specified value.	Turn ignition switch to position "ON", and engine is off or is running.	• Sensor circuit fault • Sensor fault • ECM fault
P0122	Signal circuit voltage too low, short circuit to ground		
P0123	Signal circuit voltage too high, short circuit to power supply		

mashinesoft.com 09120146259

3. Diagnosis Procedures

Test Conditions	Details/Results/Actions
1. General inspection	
	A. Inspect the sensor wiring harness connector for loose signs. B. Inspect the sensor appearance for damage. Is it normal? **Y** Go to step 2. **N** Repair the fault.
2. Inspect the throttle position sensor signal voltage	
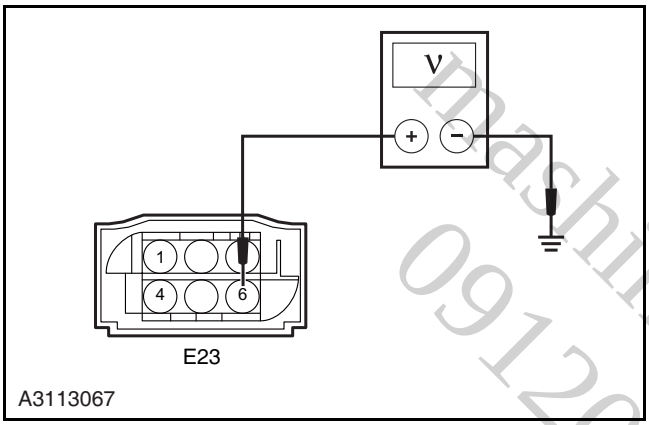	A. Turn the ignition switch to position "ON". B. Measure the voltage value at terminal 6 of throttle position sensor wiring harness connector E23 from the back, it should be a continuously changing analog signal. **Standard Voltage Value:** **Do not depress the accelerator pedal 0.74 V** **Step on the accelerator pepal in the end 4.62 V** Is the voltage value normal? **Y** Go to step 3. **N** Replace the throttle position sensor.
3. Inspect the throttle position sensor power supply circuit	
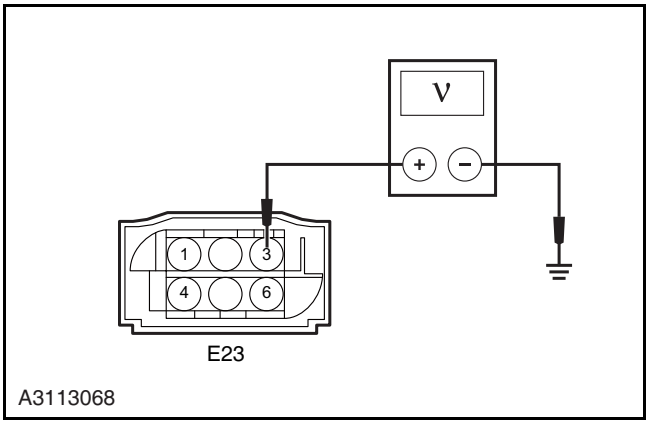	A. Turn the ignition switch to position "LOCK". B. Disconnect the throttle position sensor wiring harness connector E23. C. The ignition switch is set to position "ON". D. Measure the voltage between the terminal 3 of throttle position sensor wiring harness connector E23 and reliable grounding. **Standard Voltage Value: 4.5 ~ 5.5 V** Is the voltage value normal? **Y** Go to step 4. **N** Repair the fault circuit between terminal 3 of throttle position sensor wiring harness connector E23 and terminal 32 of ECM wiring harness connector E01.

mashinesoft.com 0912014625

Test Conditions	Details/Results/Actions
4. Inspect the throttle position sensor signal circuit	
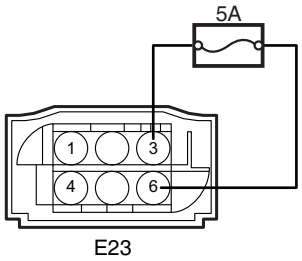 A3113069	A. Turn the ignition switch to position "LOCK". B. Disconnect the throttle position sensor wiring harness connector E23. C. Turn the ignition switch to position "ON". D. Connect a jumper wire with a 5 A fuse between terminals 3 and 6 of E23, use diagnostic tool to observe the "actual throttle position sensor voltage" parameter. **Standard Voltage Value: 4.5 ~ 5.5 V** Is the voltage normal? **Y** Go to step 5. **N** Repair the fault circuit between terminal 6 of throttle position sensor wiring harness connector E23 and terminal 54 of ECM wiring harness connector E01.
5. Inspect the throttle position sensor grounding	
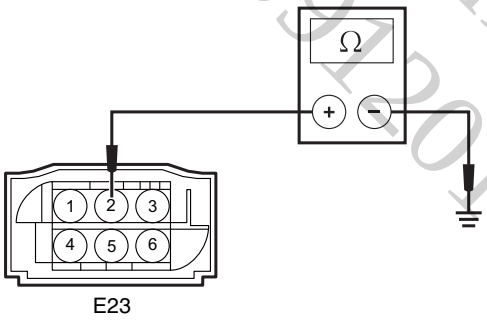 A3113070	A. Turn the ignition switch to position "LOCK". B. Disconnect the throttle position sensor wiring harness connector E23 and measure the resistance between terminal 2 of the throttle position sensor wiring harness connector E23 and reliable grounding. **Standard Resistance Value: 10 MΩ or more** C. The ignition switch is set to position "ON". D. Measure the resistance between the terminal 2 of throttle position sensor wiring harness connector E23 and the reliable grounding. **Standard Resistance Value: less than 5 Ω** Is the resistance value normal? **Y** Go to step 6. **N** Repair the fault circuit between terminal 2 of throttle position sensor wiring harness connector E23 and terminal 78 of ECM wiring harness connector E01.

mashinesoft.com 09120146259

Test Conditions	Details/Results/Actions
6. Inspect the ECM power supply circuit	
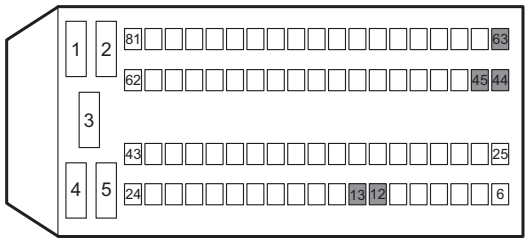 E01 A3113031	A. Turn the ignition switch to position "LOCK". B. Measure from the back of ECM wiring harness connector E01. C. Turn the ignition switch to "ON" position and use a multimeter to measure the voltage between the terminals 12, 13, 44, 45 and 63 of the ECM wiring harness connector E01 and the power supply. **Standard Voltage Value: 11 ~ 14 V** Is the voltage normal? **Y** Go to step 7. **N** Repair and inspect the ECM power supply circuit.
7. Inspect the ECM ground circuit	
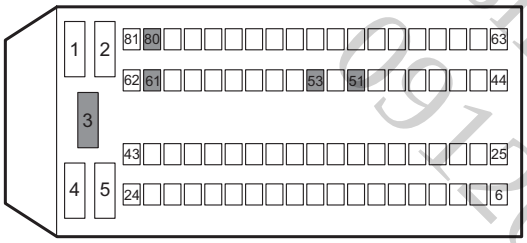 E01 A3113032	A. Turn the ignition switch to position "LOCK". B. Measure from the back of ECM wiring harness connector E01. C. Measure the resistance between the ECM wiring harness connector E01 terminal 3, 51, 53, 61 and 80 and the reliable grounding with a multimeter. **Standard Resistance Value: less than 5 Ω** Is the resistance value normal? **Y** Replace the engine control module. **Refer to: Engine Control Module (3.1.13 Electronic Control System - ME7, Removal and Installation).** **N** Inspect and repair the ECM ground circuit.

machinesoft.com 69120146259

DTC P0221, P0222 and P0223

1. DTC Description

Fault Code	Description	Definition
P0221	Electrical throttle position sensor signal 2 unreasonable	• ECM provides 5V reference voltage to terminal 3 of TPS sensor wiring harness connector E23 through terminal 32 of wiring harness connector E01. • TPS provides sensor signal voltage to terminal 38 of ECM wiring harness connector E01 through terminal 5 of E23. • ECM positions terminal 2 of TPS sensor wiring harness connector E23 at low electrical potential through terminal 78 of wiring harness connector E01.
P0222	Electrical throttle position sensor signal 2 circuit voltage too low	
P0223	Electrical throttle position sensor signal 2 circuit voltage too high	

2. Possible Sources

Fault Code	Test Tactics	Setting Conditions (Control Strategy)	Fault
P0221	Throttle position sensor 2 and throttle position sensor 1 is inconsistent. more than the spe ified value, or throttle position sensor 1 and the expected value is inconsi tent, more than the specified value.	Turn ignition switch to position "ON", and engine is off or is running.	• Sensor circuit fault • Sensor fault • ECM fault
P0222	Signal circuit voltage too low, short circuit to ground		
P0223	Signal circuit voltage too high, short circuit to power supply		

mashinesoft.com 89120146259

3. Diagnosis Procedures

Test Conditions	Details/Results/Actions
1. General inspection	
	A. Inspect the sensor wiring harness connector for loose signs. B. Inspect the sensor appearance for damage. Is it normal? **Y** Go to step 2. **N** Repair the fault.
2. Inspect the throttle position sensor voltage	
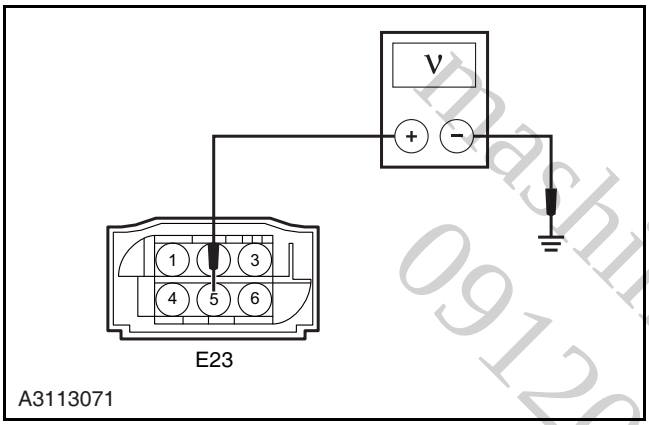	A. Turn the ignition switch to position "ON". B. Measure the voltage value at terminal 5 of throttle position sensor wiring harness connector E23 from the back, it should be a continuously changing analog signal. **Standard Voltage Value:** **Do not depress the accelerator pedal 4.24 V** **Step on the accelerator pepal in the end 0.72 V** Is the voltage value normal? **Y** Go to step 3. **N** Replace the throttle position sensor.
3. Inspect the throttle position sensor power supply circuit	
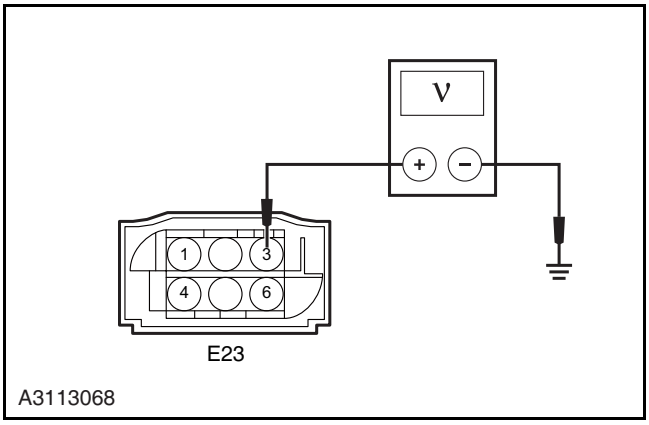	A. Turn the ignition switch to position "LOCK". B. Disconnect the throttle position sensor wiring harness connector E23. C. The ignition switch is set to position "ON". D. Measure the voltage between the terminal 3 of throttle position sensor wiring harness connector E23 and reliable grounding. **Standard Voltage Value: 4.5 ~ 5.5 V** E. Connect the throttle position sensor wiring harness connector E23. Is the voltage value normal? **Y** Go to step 4. **N** Repair the fault circuit between terminal 3 of throttle position sensor wiring harness connector E23 and terminal 32 of ECM wiring harness connector E01.

machinesoft.com 0912014625

Test Conditions	Details/Results/Actions
4. Inspect the throttle position sensor signal circuit	
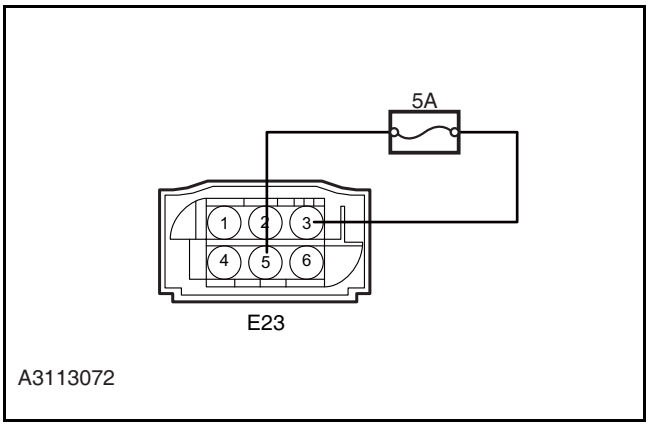	A. Turn the ignition switch to position "LOCK". B. Disconnect the throttle position sensor wiring harness connector E23. C. Turn the ignition switch to position "ON". D. Connect a jumper wire with a 5A fuse between terminals 3 and 5 of E23, use diagnostic tool to observe the "actual throttle position sensor voltage" parameter. **Standard Voltage Value: 4.5 ~ 5.5 V** E. Connect the throttle position sensor wiring harness connector E23. Is the voltage normal? **Y** Go to step 5. **N** Repair the fault circuit between terminal 5 of throttle position sensor wiring harness connector E23 and terminal 38 of ECM wiring harness connector E01.
5. Inspect the throttle position sensor grounding	
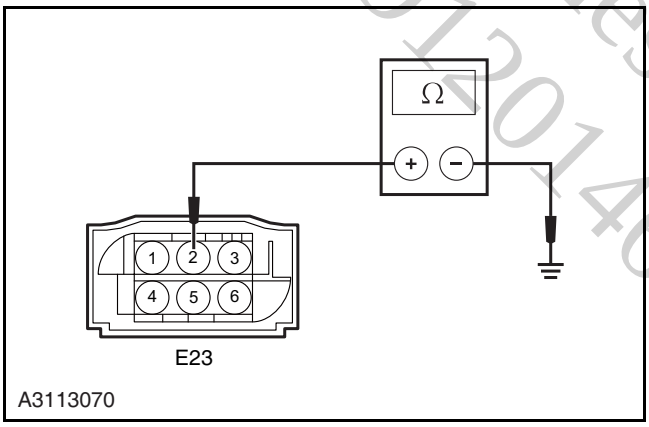	A. Turn the ignition switch to position "LOCK". B. Disconnect the throttle position sensor wiring harness connector E23 and measure the resistance between terminal 2 of the throttle position sensor wiring harness connector E23 and reliable grounding. **Standard Resistance Value: 10 MΩ or more** C. The ignition switch is set to position "ON". D. Measure the resistance between the terminal 2 of throttle position sensor wiring harness connector E23 and the reliable grounding. **Standard Resistance Value: less than 5 Ω** E. Connect the throttle position sensor wiring harness connector E23. Is the resistance value normal? **Y** Go to step 6. **N** Repair the fault circuit between terminal 2 of throttle position sensor wiring harness connector E23 and terminal 78 of ECM wiring harness connector E01.

mashinesoft.com 09120146259

Test Conditions	Details/Results/Actions
6. Inspect the ECM power supply circuit	
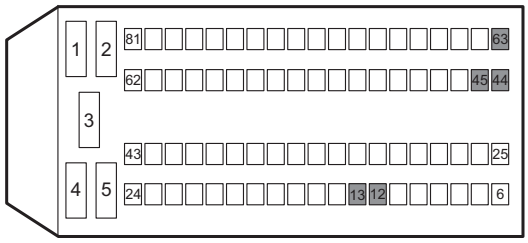 E01 A3113031	A. Turn the ignition switch to position "LOCK". B. Measure from the back of ECM wiring harness connector E01. C. Turn the ignition switch to "ON" position and use a multimeter to measure the voltage between the terminals 12, 13, 44, 45 and 63 of the ECM wiring harness connector E01 and the power supply. **Standard Voltage Value: 11 ~ 14 V** Is the voltage normal? **Y** Go to step 7. **N** Repair and inspect the ECM power supply circuit.
7. Inspect the ECM ground circuit	
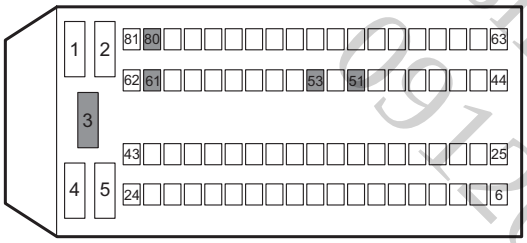 E01 A3113032	A. Turn the ignition switch to position "LOCK". B. Measure from the back of ECM wiring harness connector E01. C. Measure the resistance between the ECM wiring harness connector E01 terminal 3, 51, 53, 61 and 80 and the reliable grounding with a multimeter. **Standard Resistance Value: less than 5 Ω** Is the resistance value normal? **Y** Replace the engine control module. **Refer to: Engine Control Module (3.1.13 Electronic Control System - ME7, Removal and Installation).** **N** Inspect and repair the ECM ground circuit.

machinesoft.com 69120146259

DTC P0130, P0131, P0132, P0133, P0134, P2195, P2196

1. DTC Description

Fault Code	Description	Definition
P0130	Upstream oxygen sensor signal unreasonable	After vehicle starts, the electronic control module work under open loop mode, which is to ignore the pre - catalytic oxygen sensor signal voltage in the calculation of air - fuel ratio. ECM provides approximately 450 mV reference voltage for pre - catalytic oxygen sensor. When the engine is running, the pre - catalytic oxygen sensor start heating and start generating 0.1 ~ 0.9 V voltage. The voltage goes along the reference voltage fluctuations. Once the control module finds the pre - catalytic oxygen sensor voltage exceeding the set threshold, then it will immediately goes into closed loop mode. ECM determines the air - fuel ratio based on the pre - catalytic oxygen sensor voltage. If the pre - catalytic oxygen sensor voltage is greater than 0.45 V, indicating that the mixture is too thick. If the pre - catalytic oxygen sensor voltage is below 0.45 V, it means the mixture is too thin. ECM make the terminal 2 of the pre - catalytic oxygen sensor connector E05 at low - potential through terminal 26 of wiring harness connector E01, when oxygen sensor get to normal operating temperature, it transmit oxygen sensor signal to the ECM through terminal 1 of connector E05 that connects to terminal 18 of connector E01 on the ECM.
P0131	Upstream oxygen sensor signal voltage low	
P0132	Upstream oxygen sensor signal circuit voltage too high	
P0133	Upstream oxygen sensor aging	
P0134	Upstream oxygen sensor circuit signal circuit fault	
P2195	Upstream oxygen sensor aging	
P2196	Upstream oxygen sensor aging	

2. Possible Sources

Fault Code	Test Tactics	Setting Conditions (Control Strategy)	Fault
P0130	Pre - catalytic oxygen sensor signal couples with the heating circuit	• Pre - catalytic oxygen sensor reach the working temperature • Oxygen sensor output voltage is higher than 2.0 V	• Sensor circuit fault • Sensor fault • ECM fault
P0131	Signal short circuit to ground	• Pre - catalytic oxygen sensor output voltage is less than 0.06 V	
P0132	Front oxygen voltage is too high	• Pre - catalytic oxygen sensor voltage is higher than 1.5 V • Engine speed greater than 25 RPM • Target λ = 1 • Exhaust temperature is lower than 850 ℃ • Oxygen sensor reaches the working temperature for 150 s	

mashinesor.com 09120146269

Fault Code	Test Tactics	Setting Conditions (Control Strategy)	Fault
P0133	Front oxygen integral value exceeds the upper limit	• Pre - catalytic oxygen sensor is activated • Front oxygen integral value is higher than 1.0 s	• Sensor circuit fault • Sensor fault • ECM fault
	Front oxygen integral value exceeds the lower limit	• Rear oxygen control integral value is less than 1.0 s • Catalyst converter is normal • No diagnosis stop condition • Diagnosis time 30 s	
P0134	Signal open circuit	• Pre - catalytic oxygen sensor voltage range 0.40 ~ 0.60 V • Pre - catalytic oxygen sensor is always hot	
P2195	Front oxygen integral value exceeds the upper limit	• Pre - catalytic oxygen sensor is activated • Front oxygen integral value is higher than 1.0 s	
	Front oxygen integral value exceeds the lower limit	• Front oxygen control integral value is less than 1.0 s • Catalyst converter is normal • No diagnosis stop condition • Diagnosis time 30 s	
P2196	Front oxygen integral value exceeds the upper limit	• Pre - catalytic oxygen sensor is activated • Front oxygen integral value is higher than 1.0 s	
	Front oxygen integral value exceeds the lower limit	• Front oxygen control integral value is less than 1.0 s • Catalyst converter is normal • Diagnosis stop condition • Diagnosis time 30 s	

mashinesoft.com 09120146259

3. Diagnosis Procedures

Test Conditions	Details/Results/Actions
1. General inspection	
	A. Turn the ignition switch to position "LOCK", connect the diagnostic tool. B. Start the engine, use diagnostic tool to inspect engine system. Is there any DTC besides P0130, P0131, P0132, P0133, P0134, P2195, P2196? **Y** Carry out the DTC diagnosis. **Refer to: DTC Diagnostic Procedure Index (3.1.13 Electrical Control System - ME7, DTC Diagnosis and Testing).** **N** Go to step 2.
2. Inspect the pre - catalytic oxygen sensor data stream	
	A. Start the engine, keep the engine running till the engine water temperature is higher than 80 ℃ . B. Use a diagnostic tool access to engine data stream, observe the "pre - catalytic oxygen sensor voltage" parameter. **Standard Voltage Value: 0.1 ~ 0.9 V** Is it within the standard values? **Y** Intermittent fault. **Refer to: Intermittent Fault Inspection (3.1.13 Electronic Control System - ME7, Symptom Diagnosis and Testing).** **N** Go to step 3.

mashinesoft.com 09120146259

Test Conditions	Details/Results/Actions
3. Inspect the pre - catalytic oxygen sensor condition (carry out oxygen sensor signal test)	
	A. If the data stream shows voltage is consistently below 0.45 V (mixture too thin), inspect the following steps: • Jet proper amount of propane into the inlet port. • Observe if the pre - catalytic oxygen sensor data stream voltage changes obviously, the signal voltage will rise quickly. B. If the data stream shows voltage is consistently above 0.45 V (mixture too dense), inspect the following steps: • Position the transmission at neutral gear. • Pull the hand brake. • Press the accelerator pedal till the engine speed suddenly increased to 4,000 rpm and then quickly release the accelerator pedal. • Repeat the previous step more than 3 times. • Observe if the pre - catalytic oxygen sensor data stream voltage changes obviously, the signal voltage will drop quickly. • In the implementation of the above test, the oxygen sensor signal voltage should change significant as the test continues. Does the oxygen sensor signal voltage change significantly? **Y** Inspect the reason that caused the engine air - fuel ratio is too thin / too dense. **N** Go to step 4.
4. Inspect the pre - catalytic oxygen sensor signal circuit	

mashinesoft.com 09120146159

Test Conditions	Details/Results/Actions
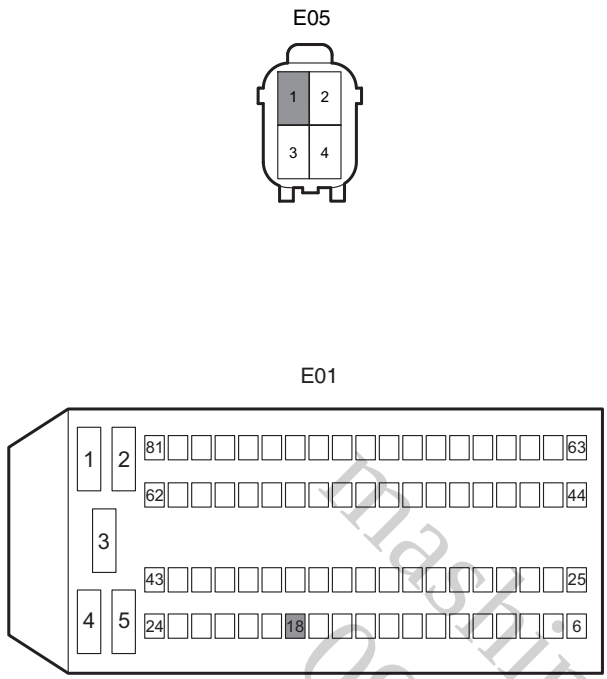 A3113073	A. Turn the ignition switch to position "LOCK". B. Disconnect the pre - catalytic oxygen sensor wiring harness connector E05. C. Disconnect the ECM wiring harness connector E01. D. Measure the resistance between the terminal 1 of pre - catalytic oxygen sensor wiring harness connector E05 and the terminal 18 of ECM wiring harness connector E01. **Standard Resistance Value: less than 5 Ω** E. Measure the resistance between the terminal 1 of pre - catalytic oxygen sensor wiring harness connector E05 and the reliable grounding. **Standard Resistance Value: less than 5 Ω** F. Measure the voltage between the terminal 1 of pre - catalytic oxygen sensor wiring harness connector E05 and the reliable grounding. **Standard Voltage Value: 0 V** Is it normal? **Y** Go to step 5. **N** Repair the circuit faults between the terminal 1 of pre - catalytic oxygen sensor wiring harness connector E05 and the terminal 18 of ECM wiring harness connector E01.
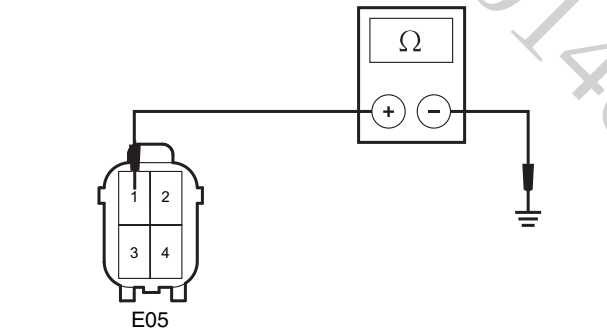 A3113074	
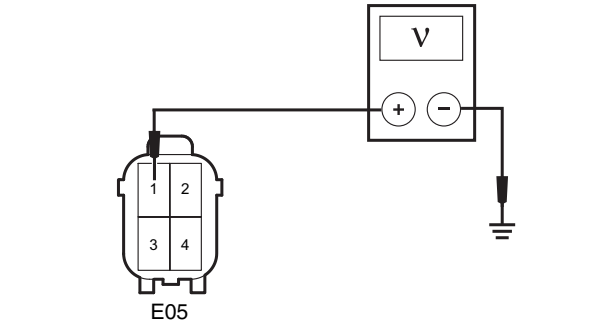 A3113075	

machinesoft.com 09120146259

Test Conditions	Details/Results/Actions
5. Inspect the pre - catalytic oxygen sensor ground circuit	
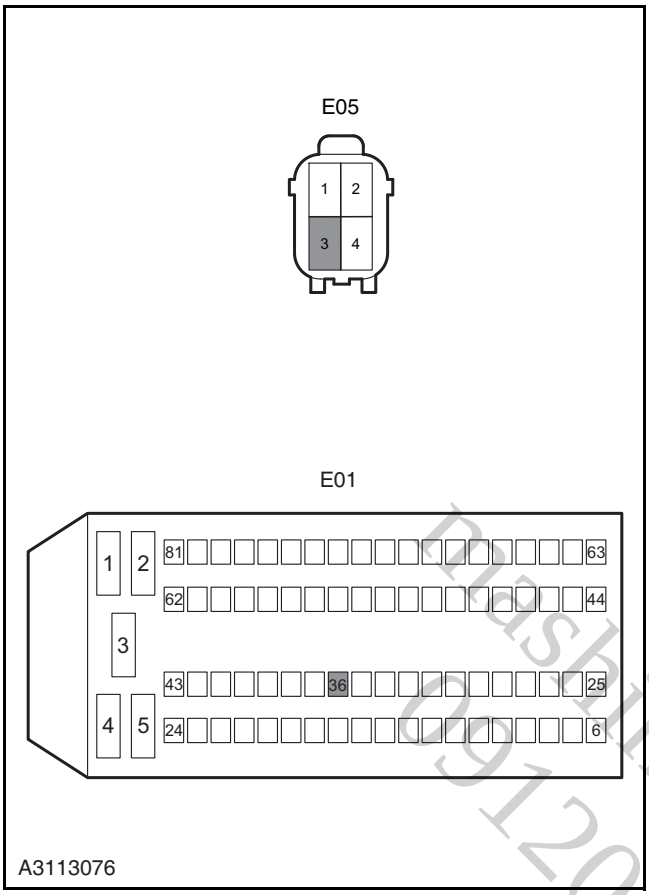	A. Turn the ignition switch to position "LOCK". B. Disconnect the pre - catalytic oxygen sensor wiring harness connector E05. C. Disconnect the engine control module wiring harness connector E01. D. Measure the resistance between terminal 3 of pre - catalytic oxygen sensor E05 and terminal 36 of engine control module wiring harness connector E01. **Standard Resistance Value: less than 5 Ω** Is the resistance value normal? **Y** Go to step 6. **N** Repair the circuit between the pre - catalytic oxygen sensor wiring harness connector E05 terminal 3 and the ECM wiring harness connector E01 terminal 36.
6. Inspect the pre - catalytic oxygen sensor	
	A. Exchange the pre - catalytic oxygen sensor with the normal vehicle of the same model B. Use a diagnostic tool access to engine data stream, observe the "pre - catalytic oxygen sensor voltage" parameter. **Standard Voltage Value: 0.1 ~ 0.9 V** Is the fault eliminated? **Y** Replace the failed pre - catalytic oxygen sensor. **N** Go to step 7.

mashinesoft.com 09120146259

Test Conditions	Details/Results/Actions
7. Inspect the ECM power supply circuit	
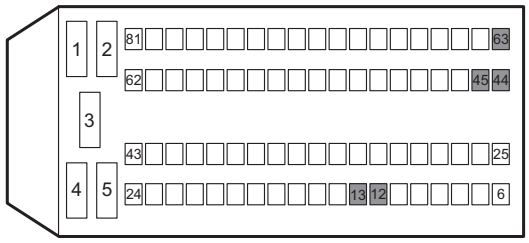 E01 A3113031	A. Turn the ignition switch to position "LOCK". B. Measure from the back of ECM wiring harness connector E01. C. Turn the ignition switch to "ON" position and use a multimeter to measure the voltage between the terminals 12, 13, 44, 45 and 63 of the ECM wiring harness connector E01 and the power supply. **Standard Voltage Value: 11 ~ 14 V** Is the voltage normal? **Y** Go to step 8. **N** Repair and inspect the ECM power supply circuit.
8. Inspect the ECM ground circuit	
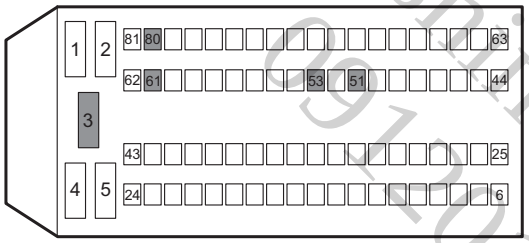 E01 A3113032	A. Turn the ignition switch to position "LOCK". B. Measure from the back of ECM wiring harness connector E01. C. Measure with a multimeter the resistance between the ECM wiring harness connector E01 terminal 3, 51, 53, 61 and 80 and the reliable grounding. **Standard Resistance Value: less than 5 Ω** Is the resistance value normal? **Y** Replace the engine control module. **Refer to: Engine Control Module (3.1.13 Electronic Control System - ME7, Removal and Installation).** **N** Inspect and repair the ECM ground circuit.

machinesoft.com 69120146259

DTC P0136, P0137, P0138, P0140, P2270, P2271

1. DTC Description

Fault Code	Description	Definition
P0136	Downstream oxygen sensor signal unreasonable	After vehicle starts, the electronic control module works under open loop mode, which is to ignore the post - catalytic oxygen sensor signal voltage in the calculation of air -f uel ratio. ECM provides approximately 450 mV reference voltage for post - catalytic oxygen sensor. When the engine is running, the post - catalytic oxygen sensor start heating and start generating 0.1 ~ 0.9 V voltage. The voltage goes along the reference voltage fluctuations. Once the control module finds the post - catalytic oxygen sensor voltage exceeds the set threshold, then it will immediately goes into closed loop mode. ECM determines the air - fuel ratio based on the post - catalytic oxygen sensor voltage. If the post - catalytic oxygen sensor voltage is greater than 0.45 V, indicating that the mixture is too thick. If the post - catalytic oxygen sensor voltage is below 0.45 V, it means the mixture is too thin. ECM makes the terminal 2 of the post - catalytic oxygen sensor E08 at low - potential through terminal 25 of E01 ,when post - catalytic oxygen sensor gets to normal operating temperature, it transmit oxygen sensor signal to the ECM through terminal 1 of E08 that connect to terminal 55 of E01 on the ECM.
P0137	Downstream oxygen sensor signal voltage low	
P0138	Downstream oxygen sensor signal circuit voltage too high	
P0140	Downstream oxygen sensor circuit signal fault	
P2270	Downstream oxygen sensor aging	
P2271	Downstream oxygen sensor aging	

mashineart.com 09120146259

2. Possible Sources

Fault Code	Test Tactics	Setting Conditions (Control Strategy)	Fault
P0136	The short circuit between the post - catalytic oxygen sensor signal and the heating wire	• Post - catalytic oxygen sensor voltage reaches working temperature • Oxygen sensor output voltage is higher than 2.0 V	• Sensor circuit fault • Sensor fault • ECM fault
P0137	Signal short circuit to ground	• Post - catalytic oxygen sensor output voltage is less than 0.06 V • Post - catalytic oxygen sensor voltage reaches working temperature	
P0138	Rear oxygen voltage is too high	• Post - catalytic oxygen sensor voltage is higher than 1.5 V • Engine speed greater than 25 RPM • Targetvλ = 1 • Catalyst temperature is higher than 250 ℃ • Oxygen sensor voltage reaches working temperature • Battery voltage higher than 10.68 V	
P0140	Post - catalytic oxygen sensor signal open circuit	• Post - catalytic oxygen sensor voltage reaches working temperature • Post - catalytic oxygen sensor voltage range 0.4 ~ 0.5 V	
P2270	Post - catalytic oxygen sensor voltage is always low	• Post - catalytic oxygen sensor voltage is less than 0.577 V • Access to diagnosis request	
P2271	Post - catalytic oxygen sensor voltage is always high	• Post - catalytic oxygen sensor voltage is higher than 0.640 V • Access to diagnosis request	

machinesoft.com 09120140259

3. Diagnosis Procedures

Test Conditions	Details/Results/Actions
1. General inspection	
	A. Turn the ignition switch to position "LOCK", connect the diagnostic tool. B. Start the engine, use diagnostic tool to inspect engine system. Is there any DTC other than DTC P0136, P0137, P0138, P0140, P2270, P2271? **Y** Carry out the DTC diagnosis. **Refer to: DTC Diagnostic Procedure Index (3.1.13 Electrical Control System - ME7, DTC Diagnosis and Testing).** **N** Go to step 2.
2. Inspect the post - catalytic oxygen sensor data stream	
	A. Start the engine, keep the engine running till the engine water temperature is higher than 80 ℃ . B. Use a diagnostic tool access to engine data stream, observe the "post - catalytic oxygen sensor voltage" parameter. **Standard Voltage Value: 0.1 ~ 0.9 V** Is it within the standard values? **Y** Intermittent fault. **Refer to: Intermittent Fault Inspection (3.1.13 Electronic Control System - ME7, Symptom Diagnosis and Testing).** **N** Go to step 3.
3. Inspect the post - catalytic oxygen sensor signal circuit	

mashinesoft.com 09120146259

Test Conditions	Details/Results/Actions
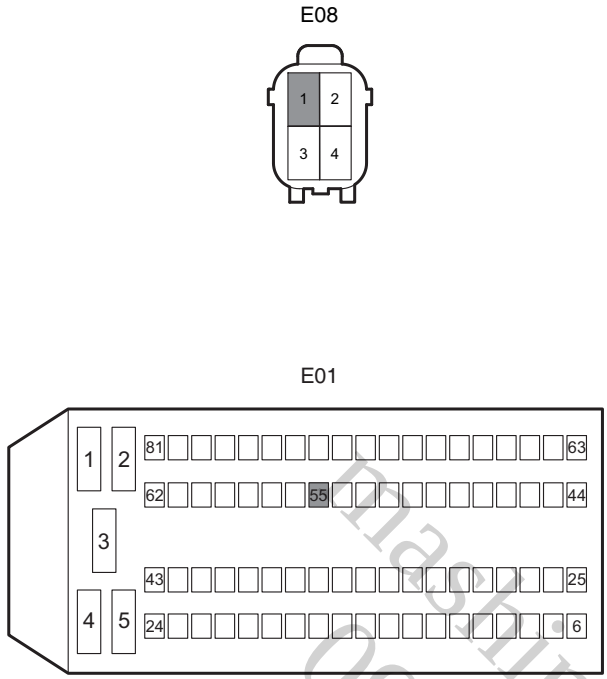 A3113037	A. Turn the ignition switch to position "LOCK". B. Disconnect the post - catalytic oxygen sensor wiring harness connector E08. C. Disconnect the ECM wiring harness connector E01. D. Measure the resistance between the terminal 1 of post - catalytic oxygen sensor wiring harness connector E08 and the terminal 55 of ECM wiring harness connector E01. **Standard Resistance Value: less than 5 Ω** E. Measure the resistance between the terminal 1 of post - catalytic oxygen sensor wiring harness connector E08 and the reliable grounding. **Standard Resistance Value: 10 MΩ or more** F. Measure the voltage between the terminal 1 of post - catalytic oxygen sensor wiring harness connector E08 and the reliable grounding. **Standard Voltage Value: 0 V** Is it normal? **Y** Go to step 5. **N** Repair the circuit faults between the terminal 1 of post - catalytic oxygen sensor wiring harness connector E08 and the terminal 55 of ECM wiring harness connector E01.
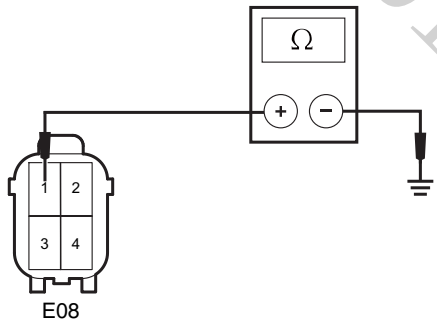 A3113078	
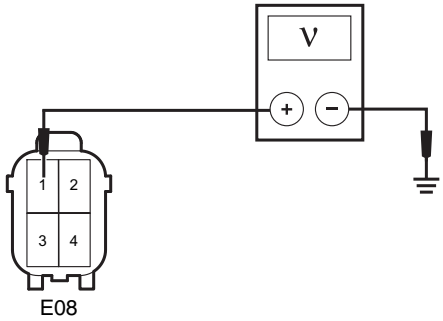 A3113079	

machinesoft.com 09120146259

Test Conditions	Details/Results/Actions
4. Inspect the post - catalytic oxygen sensor ground circuit	
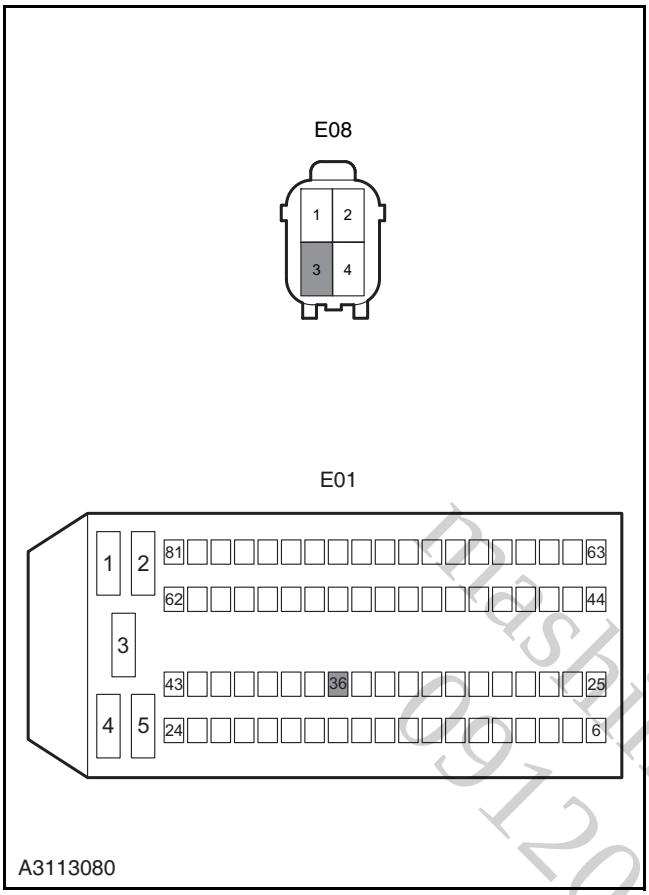	A. Turn the ignition switch to position "LOCK". B. Disconnect the post - catalytic oxygen sensor wiring harness connector E08. C. Disconnect the engine control module wiring harness connector E01. D. Measure the resistance between the terminal 3 of post - catalytic oxygen sensor wiring harness connector E08 and the terminal 36 of ECM wiring harness connector E01. **Standard Resistance Value: less than 5 Ω** Is the resistance value normal? **Y** Go to step 5. **N** Repair the circuit between the terminal 3 of post - catalytic oxygen sensor wiring harness connector E08 and the terminal 36 terminal of ECM wiring harness connector E01.
5. Inspect the oxygen sensor	
	A. Exchange the oxygen sensor with the normal vehicle of the same model. Is the fault eliminated? **Y** Replace the oxygen sensor on the failed vehicle. **N** Go to step 6.

nashinesoft.com 09120146259

Test Conditions	Details/Results/Actions
6. Inspect the ECM power supply circuit	
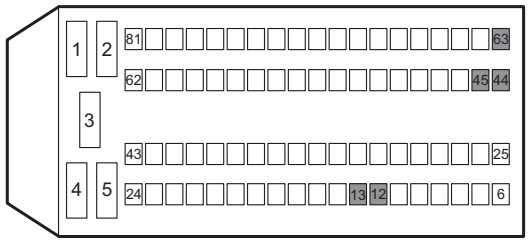 E01 A3113031	A. Turn the ignition switch to position "LOCK". B. Measure from the back of ECM wiring harness connector E01. C. Turn the ignition switch to "ON" position and use a multimeter to measure the voltage between the terminals 12, 13, 44, 45 and 63 of the ECM wiring harness connector E01 and the power supply. **Standard Voltage Value: 11 ~ 14 V** Is the voltage normal? **Y** Go to step 7. **N** Repair and inspect the ECM power supply circuit.
7. Inspect the ECM ground circuit	
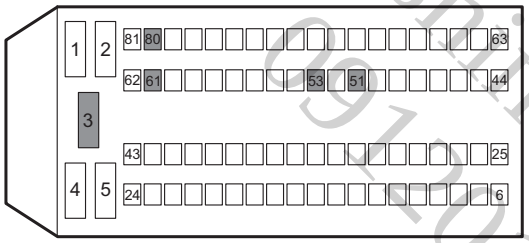 E01 A3113032	A. Turn the ignition switch to position "LOCK". B. Measure from the back of ECM wiring harness connector E01. C. Measure the resistance between the ECM wiring harness connector E01 terminal 3, 51, 53, 61 and 80 and the reliable grounding with a multimeter. **Standard Resistance Value: less than 5 Ω** Is the resistance value normal? **Y** Replace the engine control module. **Refer to: Engine Control Module (3.1.13 Electronic Control System - ME7, Removal and Installation).** **N** Inspect and repair the ECM ground circuit.

machinesoft.com 69120146259

DTC P0170, P0171, P0172, P2177, P2178, P2187, P2188

1. DTC Description

Fault Code	Description	Definition
P0170	Offline inspecting air - fuel ratio closed loop control self-learning unreasonable	Engine control module (ECM) controls closed loop air - fuel ratio measuring system, it controls the performance, fuel economy and emissions control to achieve the best cooperation. In closed loop mode, ECM monitors the voltage of the heating oxygen sensor (HO2S) signal and regulate the fuel supply according to the signal voltage. Changes in fuel supply will change the fuel adjustment value of long - term and short - term. The fuel short - term adjust value will respond to the change of heating oxygen sensor signal voltage and it will change rapidly. These changes will be fine - tuning the engine fuel supply. Long - term fuel regulating value is in response to the short-term trends change. Long - term fuel supply adjusts roughly, in order to back to the center fuel value of short-term, to recover the control to short - term adjust of the fuel regulator. Ideal value of the fuel adjustment is about 0 %. If the fuel adjustment value is positive, it says the engine control module is increasing fuel to compensate the condition of fuel mixture is too lean. Negative value of the fuel adjustment shows the engine control module is reducing the fuel to compensate the thick mixture.
P0171	Offline test air-fuel ratio close loop control self - learning is too thin	
P0172	Offline test air - fuel ratio close loop self - learning is too rich	
P2177	Air - fuel ratio closed loop control self-learning value exceed the upper limits (medium load range)	
P2178	Air - fuel ratio closed loop control self - learning value exceed the lower limits (medium load range)	
P2187	Air - fuel ratio closed loop control self - learning value exceed the upper limits (low load range)	
P2188	Air - fuel ratio closed loop control self - learning value exceed the lower limits (low load range)	

mashinesoft.com 09120146259

2. Possible Sources

Fault Code	Test Tactics	Setting Conditions (Control Strategy)	Fault
P0170	Hardware or circuit inspection	-	• MAP sensor work fault • Oxygen sensor fault • Oxygen sensor circuit fault • Oxygen sensor heater work fault • ECT sensor work fault • Fuel system fault • Ignition system performance fault • Engine mechanical problems • Engine control accessory fault • ECM fault
P0171			
P0172			
P2177			
P2178			
P2187			
P2188			

3. Diagnosis Procedures

Test Conditions	Details/Results/Actions
1. General inspection	
	A. Inspect the oxygen sensor, intake pressure and temperature sensors, engine coolant temperature sensor wiring harness connector for damage, poor contact, aging, loosening or other signs. B. Inspect the vacuum tubes for the phenomena of damage, loose, or leakage. C. Inspect the air intake system for leakage. D. Inspect for pollutants that may damage the oxygen sensor: polluting fuels, failed silicone, oil and coolant. E. Inspect the engine PRV (crankcase forced ventilation) system for clogged. F. Inspect the engine exhaust system for reduce expenditure or leakage. Is it normal? **Y** Go to step 2. **N** Repair the fault part.
2. Inspect the DTC	
	A. Connect the diagnostic tool. B. Start the engine, inspect engine system. C. Inspect DTC Are there any other DTCs except for P0170, P0171, P0172, P2177, P2178, P2187, P2188 ? **Y** Go to trouble code diagnosis procedure. **Refer to: DTC Diagnostic Procedure Index (3.1.13 Electrical Control System - ME7, DTC Diagnosis and Testing).** **N** Go to step 3.

mashinesoft.com 09120146259

Test Conditions	Details/Results/Actions
3. Inspect the data stream	
	A. Connect the diagnostic tool. B. Start engine, access to diagnostic tool engine system data stream. C. Inspect the fuel long - term, short - term modified value, long - term correction factor, additional correction factor data stream. Does the modified value exceed the normal range? **Y** Go to step 4. **Refer to: DTC Diagnostic Procedure Index (3.1.13 Electronic Control System - ME7, DTC Diagnosis and Testing).** **N** Intermittent fault. **Refer to: Intermittent Fault Inspection (3.1.13 Electronic Control System - ME7, Symptom Diagnosis and Testing).**
4. Inspect the pre - catalytic oxygen sensor data stream	
	A. Start the engine, keep the engine running till the engine water temperature is higher than 80 ℃ . B. Use a diagnostic tool access to engine data stream, observe the "pre - catalytic oxygen sensor voltage" data stream. **Standard Voltage Value: oxygen sensor signal 0.1 ~ 0.9 V** C. Test complete, turn the ignition switch to position "LOCK". Is the oxygen sensor fluctuating between 0.1 ~ 0.9 V? **Y** Go to step 6. **N** Go to step 5.

mashinesoft.com 09120146259

Test Conditions	Details/Results/Actions
5. Inspect the pre - catalytic oxygen sensor condition (carry out oxygen sensor signal test)	
	A. If the data stream shows voltage is consistently below 0.45 V (mixture too lean), inspect the following steps: • Jet proper amount of propane into the inlet port. • Observe if the pre - catalytic oxygen sensor data stream voltage changes obviously, the signal voltage will rise quickly. B. If the data stream shows voltage is consistently above 0.45 V (mixture too dense), inspect the following steps: • Position the transmission at neutral gear. • Pull the hand brake. • Press the accelerator pedal till the engine speed suddenly increased to 4,000 rpm and then quickly release the accelerator pedal. • Repeat the previous step more than 3 times. • Observe if the pre - catalytic oxygen sensor data stream voltage changes obviously, the signal voltage will drop quickly. • In the implementation of the above test, the oxygen sensor signal voltage should change significant as the test continues. Whether the oxygen sensor signal voltage change significantly? **Y** Go to step 6. **N** Replace the pre - catalytic oxygen sensor.
6. Inspect the pre - catalytic oxygen sensor signal circuit	

mashinesoft.com 09120146259

Test Conditions	Details/Results/Actions
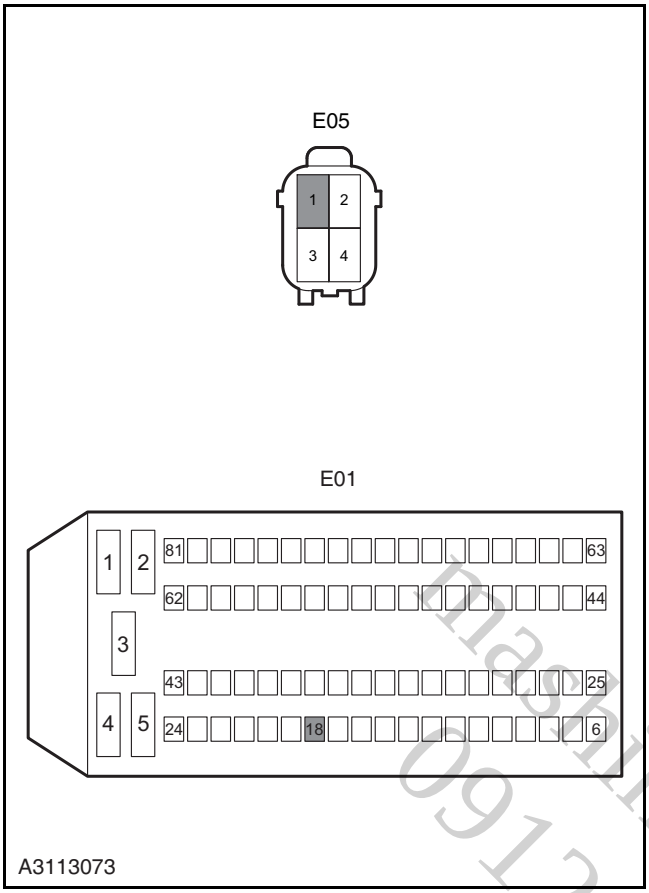	A. Turn the ignition switch to position "LOCK". B. Disconnect the pre - catalytic oxygen sensor wiring harness connector E05. C. Disconnect the ECM wiring harness connector E01. D. Measure the resistance value between the pre - catalytic oxygen sensor wiring harness connector E05 terminal 1 and the ECM wiring harness connector E01 terminal 18. Inspect the circuit for open circuit. **Standard Resistance Value: less than 5 Ω** E. Measure the resistance value between the pre - catalytic oxygen sensor wiring harness connector E05 terminal 1 and the reliable grounding. Inspect the circuit for short circuit to ground. **Standard Resistance Value: 10 MΩ or more** F. Measure the voltage value between the pre - catalytic oxygen sensor wiring harness connector E05 terminal 1 and the reliable grounding. Inspect the circuit for supply short circuit to power. **Standard Voltage Value: 0 V** Is it normal? **Y** Go to step 7. **N** Repair the circuit faults between the terminal 1 of pre - catalytic oxygen sensor wiring harness connector E05 and the terminal 18 of ECM wiring harness connector E01.
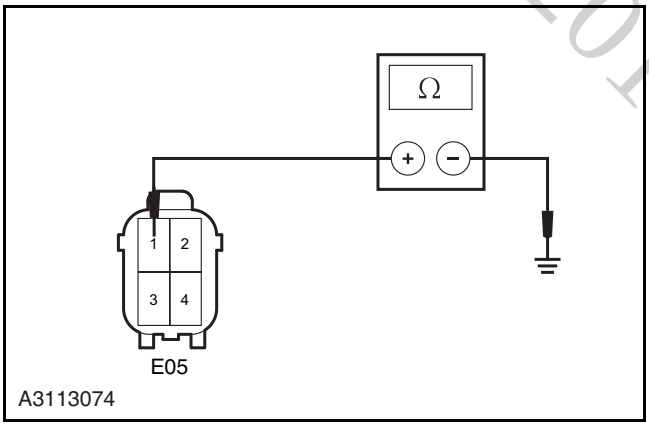	
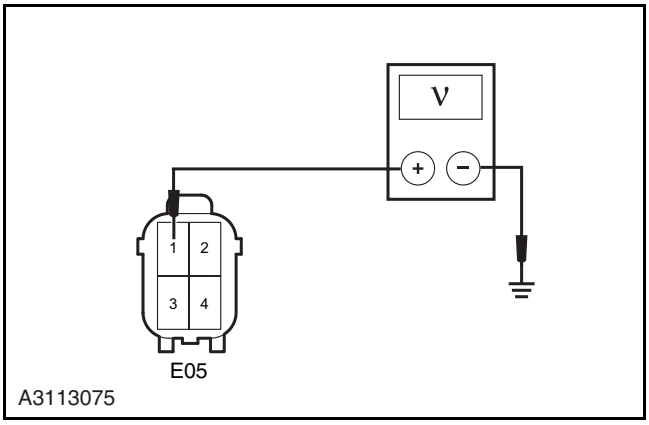	

machinesoft.com 09120146259

Test Conditions	Details/Results/Actions
7. Inspect the pre - catalytic oxygen sensor ground circuit	
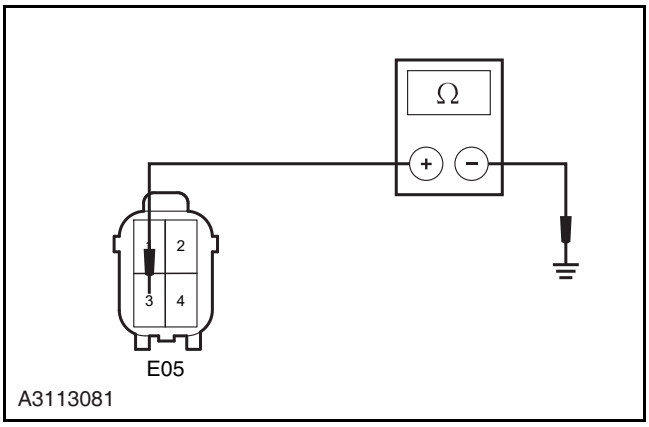	A. Turn the ignition switch to position "LOCK". B. Disconnect the pre - catalytic oxygen sensor wiring harness connector E05. C. The ignition switch is set to position "ON". D. Measure the resistance value between the pre - catalytic oxygen sensor E05 terminal 3 and the reliable grounding. **Standard Resistance Value: less than 5 Ω** E. Connect the pre - catalytic oxygen sensor wiring harness connector E05. Is the resistance value normal? **Y** Go to step 8. **N** Repair the circuit between the pre - catalytic oxygen sensor wiring harness connector E05 terminal 3 and the ECM wiring harness connector E01 terminal 36.
8. Inspect the air intake pressure sensor MAP	
	A. Turn the ignition switch to position "LOCK". B. Connect a vacuum gauge to the air intake manifold vacuum source. C. Turn the ignition switch to position "ON". D. Use a diagnostic tool to read the "actual intake manifold pressure" data stream. Is the indication on the diagnostic tool of the vacuum meter in the 1 in (25 mm) range? **Y** Go to step 9. **N** Replace the air intake pressure and temperature sensor, clean the throttle and the air intake manifold.

mashinesoft.com 09120146259

Test Conditions	Details/Results/Actions
9. Inspect the engine water temperature sensor	
	CAUTION: To make the test valid, the thermostat should work normally. **CAUTION: It is preferred to carry out this test, when the engine under cold state (completely cold).** A. Turn the ignition switch to position "ON". B. Use a diagnostic tool to read the engine temperature (ECT) sensor. If the engine is allowed to be set all night (completely cold) the temperature should close to the ambient temperature that can be felt. C. Start the engine. During the engine is warm - up, monitor the ECT sensor value. Changes in temperature should be a smooth transition from start to normal operating temperature 82°C (180°F), this value should at lest reaches 82°C (180°F). Is the water temperature sensor temperature inspect normal? **Y** Go to step 10. **N** Inspect the cooling system or replace water temperature sensor.
10. Inspect the fuel pressure	
	A. Turn the ignition switch to position "LOCK". B. Connect the fuel pressure tester. **Refer to: Fuel System Pressure Test (3.1.7 Fuel System, General Procedures).** C. Turn the ignition switch to position "ON". D. Measure the fuel pressure. Is the fuel pressure normal? **Y** Go to step 11. **N** Inspect the fuel system. **Refer to: Fuel Pump Not Work Diagnosis (3.1.7 Fuel System, Symptom Diagnosis and Testing).**

mashinesoft.com 09120146259

Test Conditions	Details/Results/Actions
11. Inspect the fuel injector control circuit	
	A. Disconnect the fuel injector wiring harness connector. B. Connect the test electrography with LED to the injector connector control terminal. C. Does the LED flash at certain frequency? **Y** Go to step 12. **N** Inspect the fuel injector wiring harness. Replace or repair it if necessary.
12. Inspect the fuel injector	
	A. Remove the fuel injector. B. Replace the fuel injector that in good condition. C. Remove the DTC. D. Start the engine, carry out road test when necessary. E. Diagnose the engine system. Are there any DTC P0170, P0171, P0172, P2177, P2178, P2187, P2188 ? **Y** Go to step 13. **N** Replace the fuel injector.
13. Inspect the compressing pressure in the cylinder	
	A. Inspect the engine compression pressure. **Refer to: Cylinder Compression Pressure Inspection (3.1.2 Mechanical System, General Procedures).** Is the compression pressure normal? **Y** Go to step 14. **N** Eliminate the low compression pressure fault.

mashinesoft.com 09120146259

Test Conditions	Details/Results/Actions
14. Inspect the ignition timing	
	A. Inspect the ignition timing. **Refer to: Timing Inspection (3.1.2 Mechanical System, General Procedures).** Is the ignition timing normal? **Y** Go to step 15. **N** Repair the ignition timing fault.
15. Inspect the ECM power supply circuit	
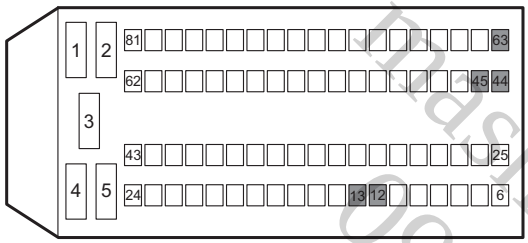 E01 A3113031	A. Turn the ignition switch to position "LOCK". B. Measure from the back of ECM wiring harness connector E01. C. Turn the ignition switch to "ON" position and use a multimeter to measure the voltage between the terminals 12, 13, 44, 45 and 63 of the ECM wiring harness connector E01 and the power supply. **Standard Voltage Value: 11 ~ 14 V** Is the voltage normal? **Y** Go to step 16. **N** Repair and inspect the ECM power supply circuit.
16. Inspect the ECM ground circuit	
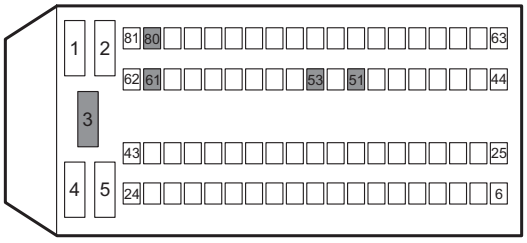 E01 A3113032	A. Turn the ignition switch to position "LOCK". B. Measure from the back of ECM wiring harness connector E01. C. Measure the resistance between the ECM wiring harness connector E01 terminal 3, 51, 53, 61 and 80 and the reliable grounding with a multimeter. **Standard Resistance Value: less than 5 Ω** Is the resistance value normal? **Y** Replace the engine control module. **Refer to: Engine Control Module (3.1.13 Electronic Control System - ME7, Removal and Installation).** **N** Inspect and repair the ECM ground circuit.

mashinesoft.com 09120146259

DTC P0201, P0261, P0262

1. DTC Description

Fault Code	Description	Definition
P0201	Cylinder 1 fuel injector control circuit open circuit	Injector operating voltage is controlled by the main relay that controlled by the ECM, battery voltage through terminal 45 of the fuse EF23 in the engine compartment electric center C10 is transported to terminal 1 of all injector wiring harness connector. ECM controls the internal grounding of injector 1 through terminal 27 on wiring harness connector E01. ECM monitors the working state of all the injectors driver circuit. If the ECM detects driving voltage not corresponding to the correct voltage, it will set up a fuel injector control circuit fault diagnosis DTC.
P0261	Cylinder 1 fuel injector control circuit short circuit to ground	
P0262	Cylinder 1 fuel injector control circuit short circuit to power supply	

2. Possible Sources

Fault Code	Test Tactics	Setting Conditions (Control Strategy)	Fault
P0201	Hardware or Circuit Inspection	• Open circuit • Short circuit to ground • Short circuit to power supply	• Injector circuit fault • Fuel injector fault • ECM fault
P0261			
P0262			

mashinesoft.com 09120146259

3. Diagnosis Procedures

Test Conditions	Details/Results/Actions
1. General inspection	
	A. Inspect fuel injector wiring harness connector for damage, poor contact, aging and loose. Is it normal? **Y** Go to step 2. **N** Repair the fault.
2. Inspect the fuel injector mouth	
	A. Disconnect the fuel injector wiring harness connector E14. B. Measure the resistance value between the two terminals of the fuel injector. **Standard Resistance Value: 20 ℃ (68 ºF)11.4 ~ 12.6 Ω** Is the resistance value normal? **Y** Go to step 3. **N** Replace the fuel injector.

Test Conditions	Details/Results/Actions
3. Inspect the fuel injector working voltage	
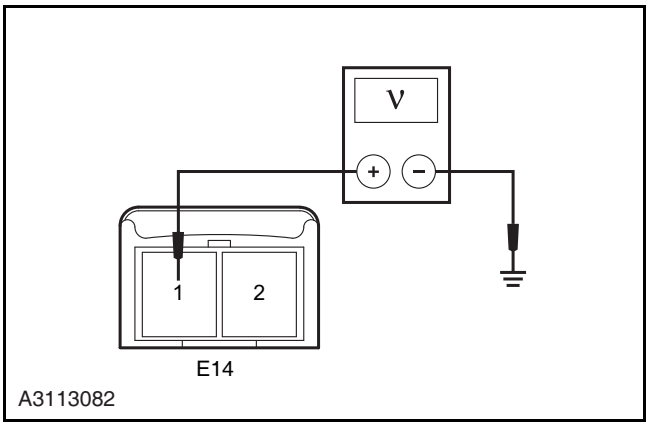	A. Turn the ignition switch to position "LOCK". B. Disconnect the cylinder 1 injector wiring harness connector E14. C. The ignition switch is set to position "ON". D. Measure the voltage between terminal 1 of the cylinder 1 injector wiring harness connector E14 and the reliable grounding. **Standard Voltage Value: 11 ~ 14 V** Is the voltage normal? **Y** Go to step 5. **N** Go to step 4.
4. Inspect the fuel injector power supply circuit	
	A. Remove the fuse EF23 from the I/P fuse and relay box C01. B. Inspect the fuse. Is the fuse normal? **Y** Repair the circuit continuity faults between terminal 1 on fuel injector wiring harness connector E14 and EF23 on engine compartment electric center C01. **N** Replace the fuse.
5. Inspect the fuel injector control signal	
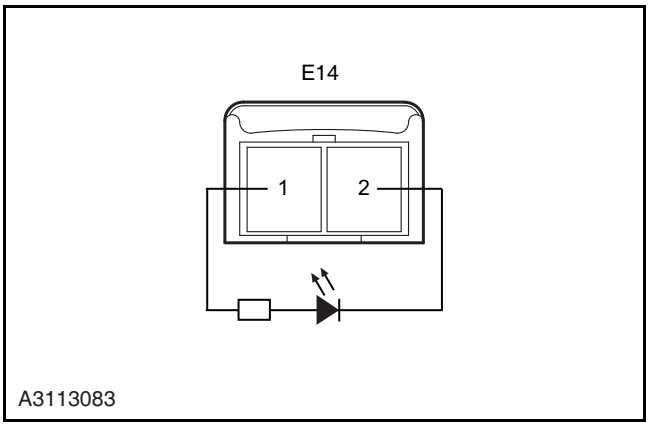	A. Turn the ignition switch to position "LOCK". B. Disconnect cylinder 1 injector connector E14. C. Connect the test electrography that with LED to the 1 and 2 terminal of E14 according to specification. D. Starting the Engine. E. Observe if the test lamp is normally flashing? Is the test lamp is flash normally? **Y** Go to step 7. **N** Go to step 6.

mashinesoft.com 09120146259

Test Conditions	Details/Results/Actions
6. Inspect the fuel injector control signal circuit	
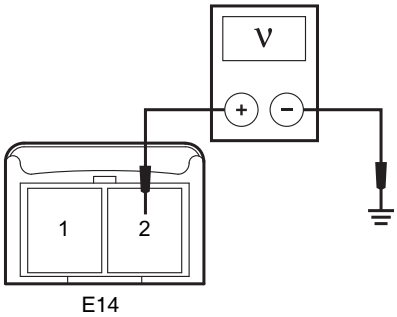 A3113084	A. Turn the ignition switch to position "LOCK". B. Disconnect the cylinder 1 injector wiring harness connector E14. C. Measure the voltage between terminal 2 of E14 and the reliable grounding. **Standard Voltage Value: 0 V** D. Disconnect the battery negative cable. E. Disconnect the ECM wiring harness connector E01. F. Measure the resistance between terminal 2 of cylinder 1 fuel injector wiring harness connector E14 and terminal 27 of ECM wiring harness connector E01. **Standard Resistance Value: less than 5 Ω** Is it normal? **Y** Go to step 7. **N** Repair the circuit faults between the terminal 2 of E14 and the terminal 27 of ECM wiring harness connector E01.
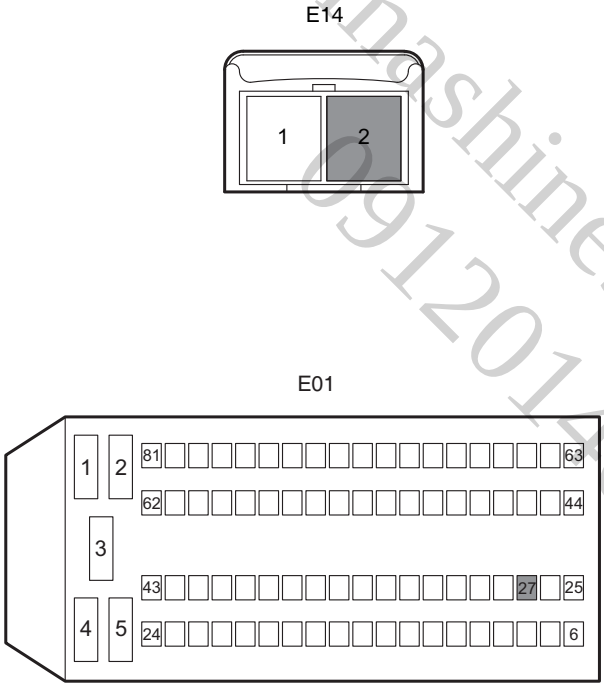 A3113085	

mashinesoft.com 09120146259

Test Conditions	Details/Results/Actions
7. Inspect the ECM power supply circuit	
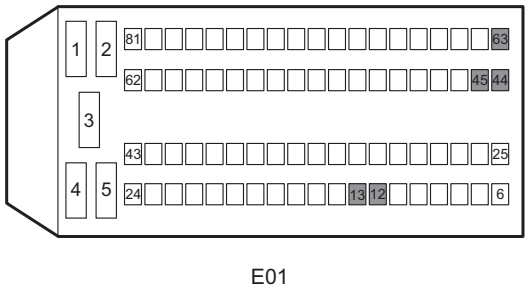 E01 A3113031	A. Turn the ignition switch to position "LOCK". B. Measure from the back of ECM wiring harness connector E01. C. Turn the ignition switch to "ON" position and use a multimeter to measure the voltage between the terminals 12, 13, 44, 45 and 63 of the ECM wiring harness connector E01 and the power supply. **Standard Voltage Value: 11 ~ 14 V** Is the voltage normal? **Y** Go to step 8. **N** Repair and inspect the ECM power supply circuit.
8. Inspect the ECM ground circuit	
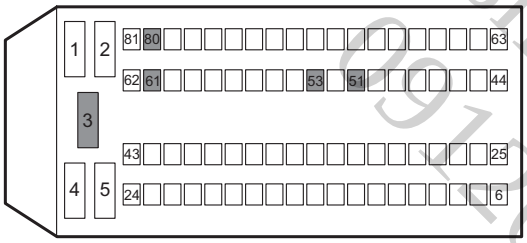 E01 A3113032	A. Turn the ignition switch to position "LOCK". B. Measure from the back of ECM wiring harness connector E01. C. Measure the resistance between the ECM wiring harness connector E01 terminal 3, 51, 53, 61 and 80 and the reliable grounding with a multimeter. **Standard Resistance Value: less than 5 Ω** Is the resistance value normal? **Y** Replace the engine control module. **Refer to: Engine Control Module (3.1.13 Electronic Control System - ME7, Removal and Installation).** **N** Inspect and repair the ECM ground circuit.

machinesoft.com 69120146259

DTC P0300, P0301, P0302, P0303, P0304

1. DTC Description

Fault Code	Description	Definition
P0300	Multi - cylinder misfire	ECM monitors the interval of CKP sensor input signal. ECM calculates the interval change for each cylinder. If the interval change exceeds the pre-programmed standard, then the ECM will detect the corresponding bad ignition cylinder. When the engine is running, ECM count the ignition misfire frequency when the revolutions of the crankshaft is 200 rpm and 1,000 rpm, and the calculate the misfire rate for crankshaft rotates one circle. If the misfire rate exceeds the pre - programmed standard, then the ECM will determine the occurrence of bad ignition that a catalytic converter can be damaged or can adversely affect emission performance.
P0301	Cylinder 1 misfire	
P0302	Cylinder 2 misfire	
P0303	Cylinder 3 misfire	
P0304	Cylinder 4 misfire	

2. Possible Sources

Fault Code	Test Tactics	Setting Conditions (Control Strategy)	Fault
P0300 P0301 P0302 P0303 P0304	The misfire ratio that damages the catalyst	• The misfire ratio that damage the catalyst is higher than 6% ~ 23% • Bad circuit test • Fuel cut - off • Torque interfere	• Connector connection loose, poor contact • Vacuum hose is broken, loose • Ignition system fault • Fuel system fault • Intake air pressure sensor fault • Engine water temperature sensor fault • Cylinder compression pressure fault • Valve clearance and timing fault • Evaporative emission control system • Crankshaft forced ventilation system • Air Intake system • Echaust system air vent clog • ECM control wiring harness fault • ECM fault
	The misfire ratio that get the emission worse	• The misfire ratio that get the emission worse is bigger than 3.0 % • Engine speed is higher than 600 rpm, less than 5,800 rpm • Engine load	
	Untrusted fault	• The misfire ratio that get the emission worse is bigger than 3.0 %.Air intake temperature is higher than -25 ℃ .	

mashinesoft.com 09120140259

3. Diagnosis Procedures

CAUTION: If the Electronic Control System stores the other DTC rather than misfiring DTC , first carry out troubleshooting for these DTC.

CAUTION: If misfire does not occur when sending to the service, carry out road test again to make the misfiring failure reappear. And use the diagnostic tool to record the ECM data when the misfiring occurs to analyze cause of the malfunction.

CAUTION: If the vehicle still stores no DTC that related to misfiring after long road test, then the failure may be caused by the following:

- Fuel tank is overfull, the fuel goes into the engine evaporative emissions Electronic Control System , causing the mixture too thick and misfire.
- Misfire caused by bad combustion of improper fuel.
- Misfire caused by ignition failure that resulted in by spark plug fouling.
- Carry out basic inspection to the system according to the DTC.
- After completion of the repairs, road test the vehicle to confirm that DTC is not stored.

Test Conditions	Details/Results/Actions
1. General inspection	
	A. Inspect the wiring harness connector for damage, poor contact, aging, loosening or other signs. B. Inspect the vacuum tubes for the phenomena of damage, loose, or leakage. C. Inspect air intake system for leakage. Is it normal? **Y** Go to step 2. **N** Repair the fault part.
2. Inspect the DTC	
	A. Connect the diagnostic tool. B. Start the engine, inspect engine system. C. Inspect the DTC. Is there any DTC besides P0300, P0301, P0302, P0303 and P0304? **Y** Go to DTC diagnosis procedure. **Refer to: DTC Diagnostic Procedure Index (3.1.13 Electrical Control System - ME7, DTC Diagnosis and Testing).** **N** Go to step 3.

mashinesoft.com 09120146259

Test Conditions	Details/Results/Actions
3. Inspect the data stream	
	A. Connect the diagnostic tool. B. Start engine, access to diagnostic tool engine system data stream. C. Inspect the water temperature sensor ECT, air intake pressure sensor MAP, engine rotate speed, throttle position TPS data stream. Is the data stream normal? **Y** Repair the abnormal data stream. **N** Go to step 4.
4. Inspect the spark plug	
	A. Remove the spark plug on the misfire cylinder. B. Inspect the spark plug gap to see it is too large or too small. **Standard Clearance: 0.7 ~ 0.8 mm (0.028 ~ 0.032 in)** C. Inspect the spark plug electrode for erosion and damage. D. Inspect the spark plug and the electrode skirt part for wet, and the existence of a serious gasoline smell. Is the spark plug normal? **Y** Go to step 5. **N** Replace or repair the spark plug.
5. Inspect the ignition coil	
	A. Remove the ignition coil. B. Inspect the ignition coil . **Refer to: Ignition Coil Inspection (3.1.8 Ignition System, General Procedures).** C. Install ignition coil. Is the ignition coil normal? **Y** Go to step 6. **N** Replace the ignition coil. **Refer to: Ignition Coil (3.1.8 Ignition System, Removal and Installation).**

mashinesoft.com 09120146259

Test Conditions	Details/Results/Actions
6. Inspect the ignition system	
	A. Turn the ignition switch to position "LOCK". B. Carry out the ignition spark test. **Refer to: Ignition Spark Test (3.1.8 Ignition System, General Procedures).** Is the spark plug ignition spark test normal? **Y** Go to step 7. **N** Inspect the ignition system. **Refer to: Diagnosis procedures for spark plugs not flash over (3.1.8 Ignition System, Symptom Diagnosis and Testing).**
7. Inspect the fuel pressure	
	A. Turn the ignition switch to position "LOCK". B. Measure the fuel pressure. **Refer to: Fuel System Pressure Test (3.1.7 Fuel System, General Procedures).** Is the fuel pressure normal? **Y** Go to step 8. **N** Inspect the fuel system. **Refer to: Fuel Pump Malfunction Diagnosis (3.1.7 Fuel System, Symptom Diagnosis and Testing).**
8. Inspect the compression pressure	
	A. Inspect the engine compression pressure. **Refer to: Cylinder Compression Pressure Inspection (3.1.2 Mechanical System, General Procedures).** Is the compression pressure normal? **Y** Go to step 9. **N** Eliminate the low compression pressure fault.

mashinesoft.com 09120146259

Test Conditions	Details/Results/Actions
9. Inspect the ECM power supply circuit	
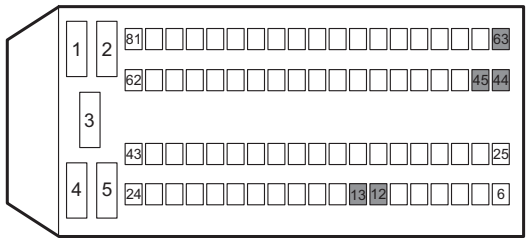 E01 A3113031	A. Turn the ignition switch to position "LOCK". B. Measure from the back of ECM wiring harness connector E01. C. Turn the ignition switch to "ON" position and use a multimeter to measure the voltage between the terminals 12, 13, 44, 45 and 63 of the ECM wiring harness connector E01 and the power supply. **Standard Voltage Value: 11 ~ 14 V** Is the voltage normal? **Y** Go to step 10. **N** Repair and inspect the ECM power supply circuit.
10. Inspect the ECM ground circuit	
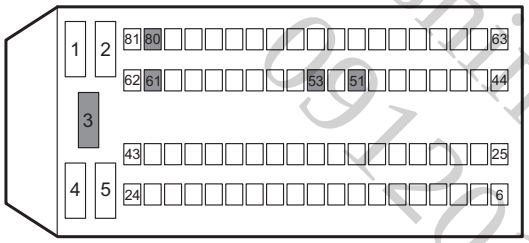 E01 A3113032	A. Turn the ignition switch to position "LOCK". B. Measure from the back of ECM wiring harness connector E01. C. Measure with a multimeter the resistance between the ECM wiring harness connector E01 terminal 3, 51, 53, 61 and 80 and the reliable grounding. **Standard Resistance Value: less than 5 Ω** Is the resistance value normal? **Y** Replace the engine control module. **Refer to: Engine Control Module (3.1.13 Electronic Control System - ME7, Removal and Installation).** **N** Inspect and repair the ECM ground circuit.

machinesoft.com 69120146259

DTC P0317, P0501, P1523

1. DTC Description

Fault Code	Description	Definition
P0317	Circuit test ABS signal fault	ECM communicates with TCM, ABS and SDM via CAN network and the diagnostic tool may be used to access TCM, ABS, ECM and SDM through diagnostic interface DLC.
P0501	Speed sensor signal fault	
P1523	Airbag activated	

2. Possible Sources

Fault Code	Test Tactics	Setting Conditions (Control Strategy)	Fault
P0317	Hardware circuit inspect	Communication signal lost, signal logic error	CAN bus fault TCM fault ABS fault ECM fault
P0501			
P1523			

3. Diagnosis Procedures

Test Conditions	Details/Results/Actions
1. General inspection	
	A. Inspect the related wiring harness connector for signs of damage, poor contact, aging or loose. Is it normal? **Y** Go to step 2. **N** Repair the fault.
2. Eliminate the DTC	
	A. Connect the diagnostic tool. B. Use a diagnostic tool to delete DTC. C. Swing, pull and press the diagnosis joint DLC, engine control module ECM and vehicle body control module BCM wiring harness connector. D. Use the diagnostic tool to redo the diagnosis for DTC. Are there any DTC P0317, P0501, P1523? **Y** Go to step 3. **N** Intermittent fault. **Refer to: Intermittent Fault Diagnosis (3.1.13 Electrical Control System - ME7, Symptom Diagnosis and Testing).**

mashinesoft.com 09120146259

Test Conditions	Details/Results/Actions
3. Inspect and repair the CAN bus circuit	
	A. Inspect and repair the CAN bus circuit. **Refer to: CAN Bus Integrity Inspection (4.3.15 On-board Network System, Description and Operation).** Is the network normal? **Y** Go to step 4. **N** Inspect and repair CAN network circuit of each control module, and replace the failed modules.
4. Inspect the ECM power supply circuit	
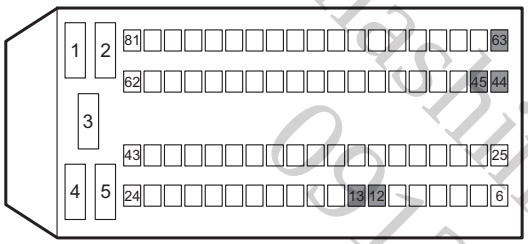 E01 A3113031	A. Turn the ignition switch to position "LOCK". B. Measure from the back of ECM wiring harness connector E01. C. Turn the ignition switch to "ON" position and use a multimeter to measure the voltage between the terminals 12, 13, 44, 45 and 63 of the ECM wiring harness connector E01 and the power supply. **Standard Voltage Value: 11 ~ 14 V** Is the voltage normal? **Y** Go to step 5. **N** Repair and inspect the ECM power supply circuit.
5. Inspect the ECM ground circuit	
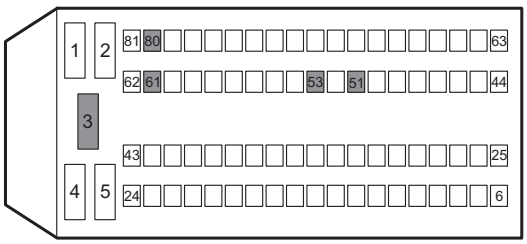 E01 A3113032	A. Turn the ignition switch to position "LOCK". B. Measure from the back of ECM wiring harness connector E01. C. Measure the resistance between the ECM wiring harness connector E01 terminal 3, 51, 53, 61 and 80 and the reliable grounding with a multimeter. **Standard Resistance Value: less than 5 Ω** Is the resistance value normal? **Y** Replace the engine control module. **Refer to: Engine Control Module (3.1.13 Electronic Control System - ME7, Removal and Installation).** **N** Inspect and repair the ECM ground circuit.

machinesoft.com 09120146259

DTC P0321, P0322

1. DTC Description

Fault Code	Description	Definition
P0321	Crankshaft upper dead point missing teeth signal unreasonable	Crankshaft upper dead center signal fault. CKP sensor signal tells ECM the speed and position of current crankshaft CKP sensor produces an alternating voltage with different amplitude and frequency. Frequency is decided by crankshaft speed and output alternating voltage is decided by CKP. CKP sensor cooperates with crankshaft's last retaining 58X variable reluctance rotor. ECM can calculate ignition timing, injection timing and knock ignition control according to input signal of CKP sensor and camshaft position sensor. CKP sensor is used for inspection of misfire and tachometer display. ECM transmits engine speed signal to instrument via CAN network. CKP sensor signal is connected to terminals 15, 34 of ECM wiring harness connector E01 respectively via terminals 1, 2 of CKP sensor wiring harness connector E07.
P0322	Speed sensor signal fault	

mashinesoft.com 09120146259

2. Possible Sources

Fault Code	Test Tactics	Setting Conditions (Control Strategy)	Fault
P0321	• Frequent correction to increase tooth • Frequent correction to decrease tooth • Speed sensor signal exist but the reference mark can not be found • Frequently lost reference mark	• Increase one tooth correction numeration time is bigger than 250 • Decrease one tooth correction numeration time is bigger than 250 • Unmonitored reference mis - tooth numeration time 4 is bigger than 6 • The correction numeration time of the lost reference mis - tooth is more than 2,000	• Crankshaft position sensor fault • Crankshaft position sensor circuit fault • ECM fault
P0322	After a certain number of camshaft position sensor signal, no crankshaft position signal is monitored	• Phase signal register value is higher than 18 • Relative low speed engine group speed	

3. Diagnosis Procedures

Test Conditions	Details/Results/Actions
1. General inspection	
	A. Inspect sensor wiring harness connector E07 for loose or poor contact. B. Inspect the sensor for proper installation. C. Inspect the sensor for normal gap. Is it normal? **Y** Go to step 2. **N** Repair the fault.
2. Read the engine data on the diagnostic tool (engine speed)	
	A. Connect the diagnostic tool. B. Turn the ignition switch to position "ON". C. Select "Changan Auto" / "CS35" / "UMC ME788" / "Read date stream" / "Engine speed". D. Start the engine. E. When the engine is running, read the engine speed data on the diagnostic tool. **Standard Value: normal data. Refer to data stream list.** F. If the engine cannot start, inspect the data when the engine operates. G. If the engine speed on the diagnostic tool is "0", it means the wiring harness between crankshaft position sensor and ECM has open circuit or short circuit. Is the data stream normal? **Y** Intermittent fault. **Refer to: Intermittent Fault Inspection (3.1.13 Electronic Control System - ME7, Symptom Diagnosis and Testing).** **N** Go to step 3.

mashinesoft.com 09120146259

Test Conditions	Details/Results/Actions
3. Inspect the crankshaft position sensor	
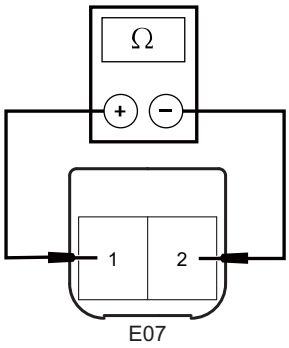 A3113033	A. Turn the ignition switch to position "LOCK". B. Disconnect the crankshaft position sensor wiring harness connector E07. C. Measure the resistance value of crankshaft position sensor. **Standard Resistance Value: 20 ℃ (68ºF)731 ~ 989 Ω** Is the resistance value normal? **Y** Go to step 4. **N** Replace the crankshaft position sensor. **Refer to: Crankshaft Position Sensor (3.1.13 Electrical Control System - ME7, Removal and Installation).**
4. Inspect the crankshaft position sensor terminal 1 circuit	

machinesoft.com 0912014259

Test Conditions	Details/Results/Actions
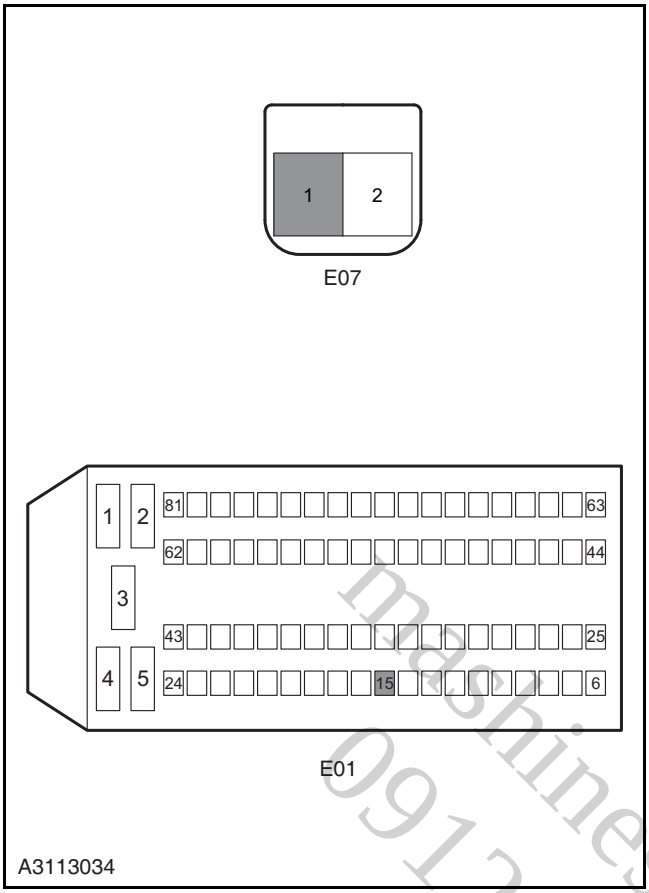	A. Turn the ignition switch to position "LOCK". B. Disconnect the crankshaft position sensor wiring harness connector E07. C. Disconnect the the ECM wiring harness connector E01. D. Measure the resistance value between terminal 1 of crankshaft position sensor wiring harness connector E07 and terminal 15 of ECM wiring harness connector E01. **Standard Resistance Value: less than 5Ω** E. Measure the resistance between terminal 1 of crankshaft position sensor wiring harness connector E07 and reliable grounding. **Standard Resistance Value: 10 MΩ or more** F. Measure the voltage between terminal 1 of crankshaft position sensor wiring harness connector E07 and reliable grounding. **Standard Voltage Value: 0 V** Is the circuit normal? **Y** Go to step 5. **N** Repair the fault circuit between the terminal 1 of crankshaft position sensor wiring harness connector E07 and the terminal 15 of ECM wiring harness connector E01.
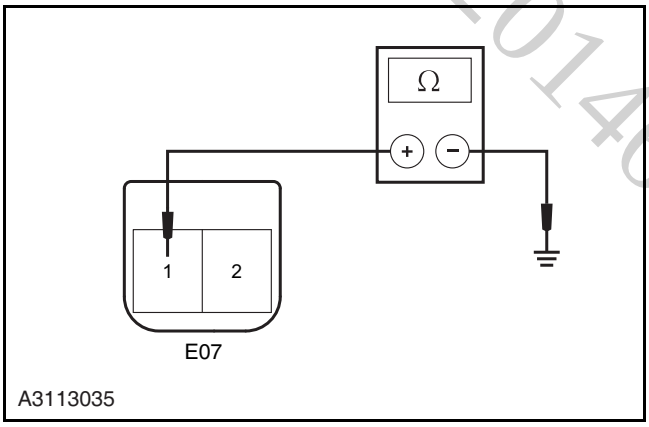	
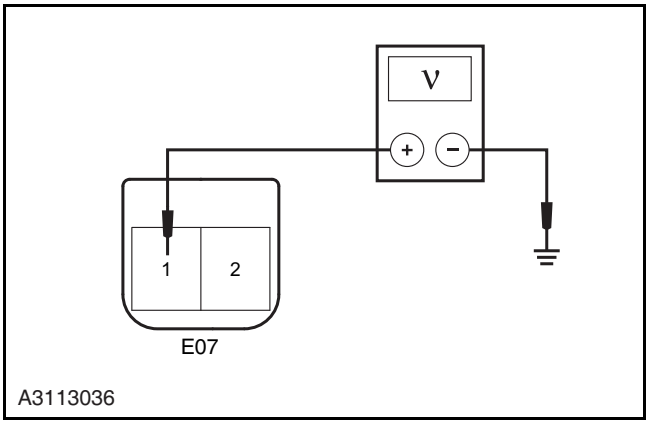	

machinesoft.com 09120146259

Test Conditions	Details/Results/Actions
5. Inspect the crankshaft position sensor terminal 2 circuit	
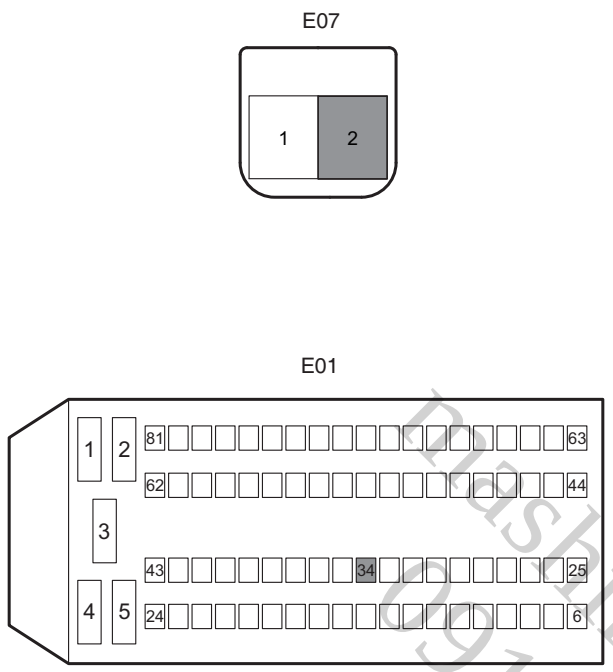 A3113163	A. Turn the ignition switch to position "LOCK". B. Disconnect the crankshaft position sensor wiring harness connector E07. C. Disconnect the ECM wiring harness connector E01. D. Measure the resistance value between terminal 2 of crankshaft position sensor wiring harness connector E07 and terminal 34 of ECM wiring harness connector E01. **Standard Resistance Value: less than 5Ω** E. Measure the resistance between terminal 2 of crankshaft position sensor wiring harness connector E07 and reliable grounding. **Standard Resistance Value: 10 MΩ or more** F. Measure the voltage between terminal 2 of crankshaft position sensor wiring harness connector E07 and reliable grounding. **Standard Voltage Value: 0 V** Is the circuit normal? **Y** Go to step 6. **N** Repair the fault circuit between the terminal 2 of crankshaft position sensor wiring harness connector E07 and the terminal 34 of ECM wiring harness connector E01.
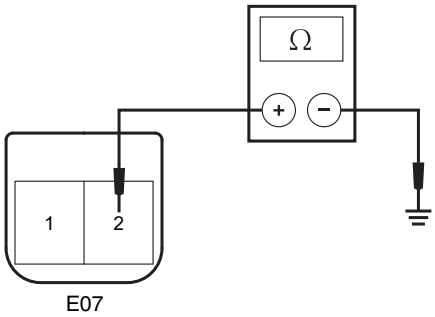 A3113038	

mashines.com 09120146259

Test Conditions	Details/Results/Actions
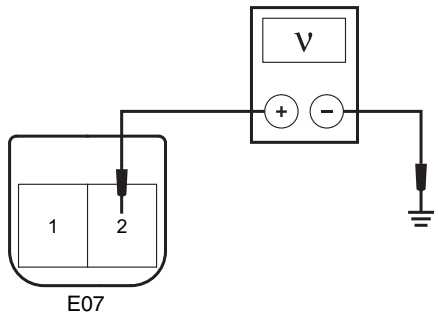 A3113039	
6. Inspect the ECM power supply circuit	
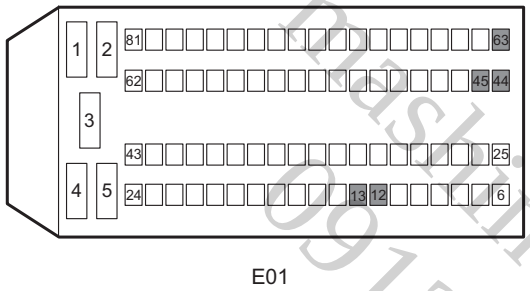 A3113031	A. Turn the ignition switch to position "LOCK". B. Measure from the back of ECM wiring harness connector E01. C. Turn the ignition switch to "ON" position and use a multimeter to measure the voltage between the terminals 12, 13, 44, 45 and 63 of the ECM wiring harness connector E01 and the power supply. **Standard Voltage Value: 11 ~ 14 V** Is the voltage normal? **Y** Go to step 7. **N** Repair and inspect the ECM power supply circuit.
7. Inspect the ECM ground circuit	
 A3113032	A. Turn the ignition switch to position "LOCK". B. Measure from the back of ECM wiring harness connector E01. C. Measure the resistance between the ECM wiring harness connector E01 terminal 3, 51, 53, 61 and 80 and the reliable grounding with a multimeter. **Standard Resistance Value: less than 5 Ω** Is the resistance value normal? **Y** Replace the engine control module. **Refer to: Engine Control Module (3.1.13 Electronic Control System - ME7, Removal and Installation).** **N** Inspect and repair the ECM ground circuit.

machinesoft.com 08120146255

DTC P0327, P0328

1. DTC Description

Fault Code	Description	Definition
P0327	Knock sensor signal circuit voltage is too low	Knock sensor is located on the cylinder body that below the intake manifold. The AC signal voltage generated by the knock sensor changes as the vibration degree that occurred during the engine running. Engine control module adjusts the ignition timing based on the amplitude and frequency of the knock sensor signal. ECM receives the signal of terminals 1, 2 on knock sensor wiring harness connector E10 through terminals 19, 20 on wiring harness connector E01.
P0328	Knock sensor signal circuit voltage is too high	

2. Possible Sources

Fault Code	Test Tactics	Setting Conditions (Control Strategy)	Fault
P0327		• Knock identification reference voltage 0.097 ~ 2.05 V • 25 figures in succession	• Knock sensor open circuit fault • Knock sensor fault • ECM fault
P0328		• Knock identification reference voltage 9 ~ 120 V • 25 figures in succession	

mashinesoft.com 09120146259

3. Diagnosis Procedures

Test Conditions	Details/Results/Actions
1. General inspection	
	A. Inspect knock sensor for physical damage. B. Inspect knock sensor to see if the installation is proper, the torque is too tight or too loose will all lead to the set of DTC. C. Inspect the installation surface of knock sensor for burr, overlab or foreign body. D. Knock sensor must be far away from hose, bracket and engine circuit. Is it normal? **Y** Go to step 2. **N** Repair the fault.

Test Conditions	Details/Results/Actions
2. Inspect the data stream	
	A. Connect the diagnostic tool. B. Turn the ignition switch to position "ON". C. Start the engine, let the engine running to the normal working temperature. D. Select "Changan Auto"/"CS35"/"UAE ME 788'/ "knock sensor signal 1, knock sensor signal 2, ignition advance angle, engine speed". E. Road test to read the data stream that display on the diagnosis apparatus. Is the data stream normal? **Y** **Refer to: Intermittent Fault Inspection (3.1.13 Electrical Control System - ME7, Symptom Diagnosis and Testing).** **N** Go to step 3.
3. Inspect the knock sensor	
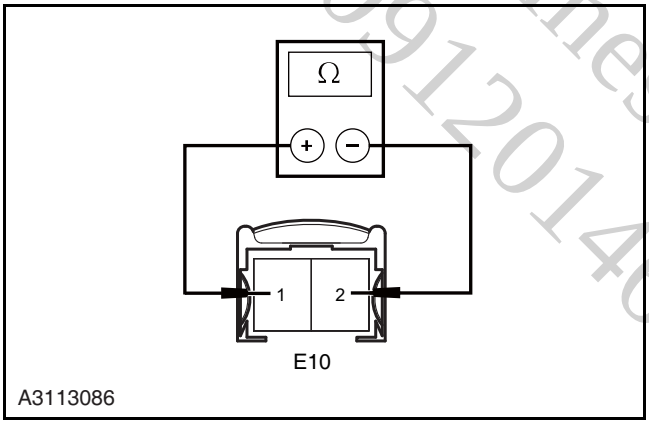	A. Turn the ignition switch to position "LOCK". B. Disconnect the knock sensor wiring harness connector E10. C. Measure the resistance value of knock sensor. **Standard Voltage Value: 25 ℃ (77ºF) higher than 1MΩ** D. Connect the knock sensor wiring harness connector E10. Is the resistance value normal? **Y** Go to step 4. **N** Intermittent fault. Replace the knock sensor. **Refer to: Knock Sensor (3.1.13 Electronic Control System - ME7, Removal and Installation).**
4. Inspect the knock sensor terminal 1 circuit	

mashinesoft.com 09120146259

Test Conditions	Details/Results/Actions
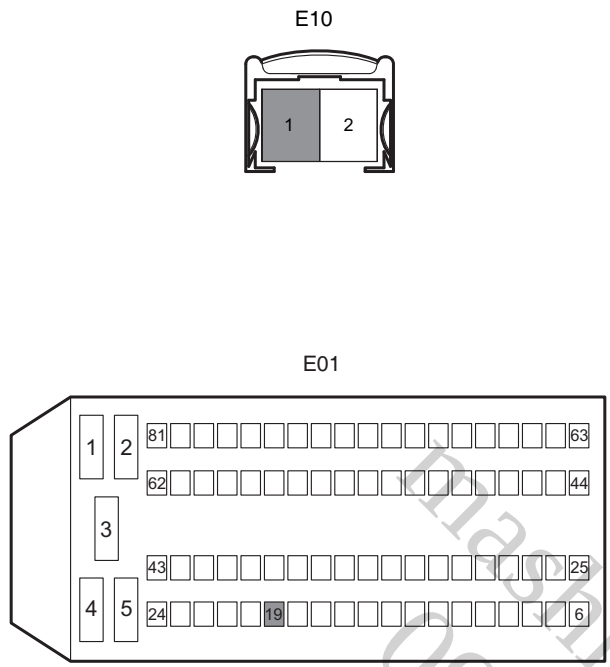 A3113087	A. Turn the ignition switch to position "LOCK". B. Disconnect the battery negative cable. C. Disconnect the knock sensor wiring harness connector E10. D. Disconnect the ECM wiring harness connector E01. E. Measure the resistance between the terminal 1 of knock sensor wiring harness connector E10 and the terminal 19 of ECM wiring harness connector E01. **Standard Resistance Value: less than 5 Ω** F. Measure the resistance between terminal 1 of knock sensor wiring harness connector E10 and the reliable grounding. **Standard Resistance Value: 10 MΩ or more** G. Measure the voltage between the terminal 1 of knock sensor wiring harness connector E10 and the reliable grounding. **Standard Voltage Value: 0 V** Is the circuit normal? **Y** Go to step 5. **N** Repair the fault circuit between the terminal 1 of knock sensor wiring harness connector E10 and the terminal 19 of ECM wiring harness connector E01.
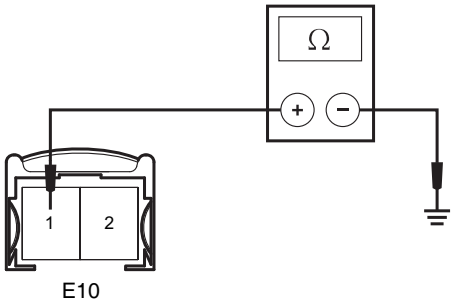 A3113088	
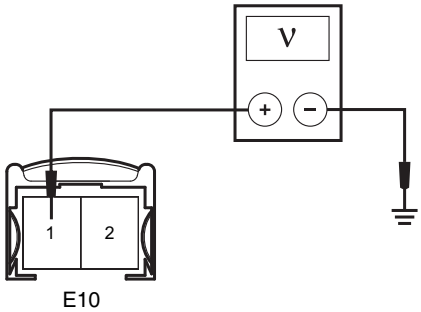 A3113089	

machinesoft.com 09120146259

Test Conditions	Details/Results/Actions
5. Inspect the knock sensor terminal 2 circuit	
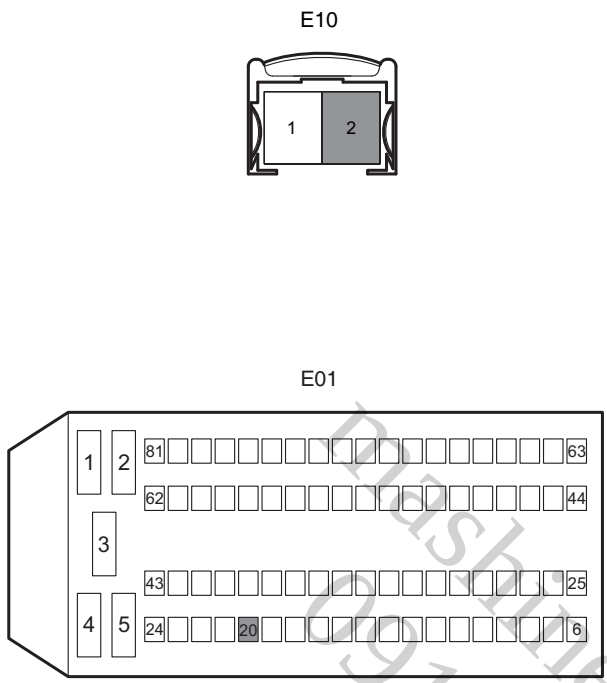 A3113090	A. Turn the ignition switch to position "LOCK". B. Disconnect the battery negative cable. C. Disconnect the knock sensor wiring harness connector E10. D. Disconnect the ECM wiring harness connector E01. E. Measure the resistance between the terminal 2 of knock sensor wiring harness connector E10 and the terminal 20 of ECM wiring harness connector E01. **Standard Resistance Value: less than 5 Ω** F. Measure the resistance between terminal 2 of knock sensor wiring harness connector E10 and the reliable grounding. **Standard Resistance Value: 10 MΩ or more** G. Measure the voltage between terminal 2 of knock sensor wiring harness connector E10 and the reliable grounding. **Standard Voltage Value: 0 V** Is the circuit normal? **Y** Go to step 6. **N** Repair the fault circuit between the terminal 2 of wiring harness connector E10 and the terminal 20 of ECM wiring harness connector E01.
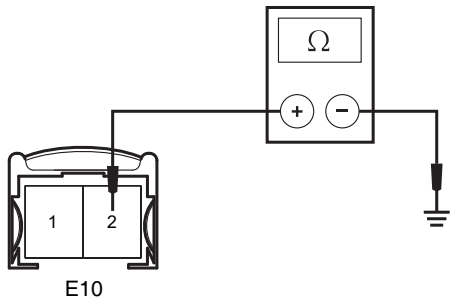 A3113091	

mashinesoft.com 09120146259

Test Conditions	Details/Results/Actions
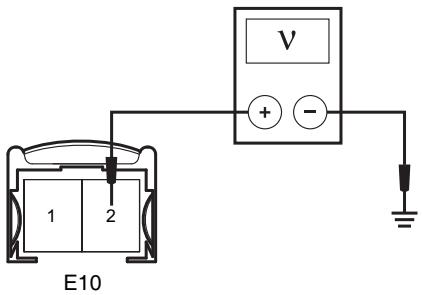 A3113092	
6. Inspect the ECM power supply circuit	
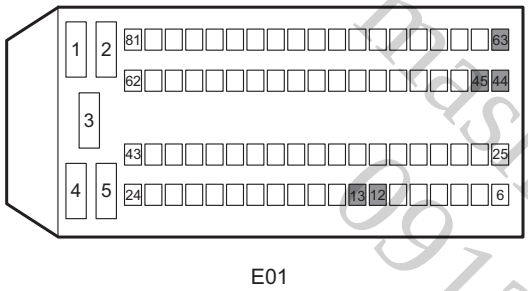 A3113031	A. Turn the ignition switch to position "LOCK". B. Measure from the back of ECM wiring harness connector E01. C. Turn the ignition switch to "ON" position and use a multimeter to measure the voltage between the terminals 12, 13, 44, 45 and 63 of the ECM wiring harness connector E01 and the power supply. **Standard Voltage Value: 11 ~ 14 V** Is the voltage normal? **Y** Go to step 7. **N** Repair and inspect the ECM power supply circuit.
7. Inspect the ECM ground circuit	
 A3113032	A. Turn the ignition switch to position "LOCK". B. Measure from the back of ECM wiring harness connector E01. C. Measure the resistance between the ECM wiring harness connector E01 terminal 3, 51, 53, 61 and 80 and the reliable grounding with a multimeter. **Standard Resistance Value: less than 5 Ω** Is the resistance value normal? **Y** Replace the engine control module. **Refer to: Engine Control Module (3.1.13 Electronic Control System - ME7, Removal and Installation).** **N** Inspect and repair the ECM ground circuit.

machinesoft.com 08912014623

DTC P0340, P0341, P0342, P0343

DTC Description

Fault Code	Description	Definition
P0340	Intake phase sensor is installed in improper position	• Camshaft position sensor circuit includes the following circuits: • Reference voltage: ECM provides reference voltage for terminal 3 on CMP sensor wiring harness connector E19 through terminal 32 on ECM wiring harness E01. • Signal circuit: ECM receive signal voltage of terminal 2 on CMP sensor wiring harness connector E19 through terminal 79 on ECM wiring harness connector E01. • ECM low voltage circuit: ECM positions the terminal 1 on CMP sensor wiring harness connector E19 to low electric potential through terminal 36 of ECM wiring harness connector E01.
P0341	Intake phase sensor with poor contact	
P0342	Air intake phase sensor short circuit to ground	
P0343	Short circuit to power supply (or open circuit) of the intake phase sensor	

2. Possible Sources

Fault Code	Test Tactics	Setting Conditions (Control Strategy)	Fault
P0340	Poor contact	• Phase signal register value is equal to 255 or 0 • Phase signal register value is higher than 4	• Phase sensor circuit fault • Phase sensor fault • Phase signal wheel damaged
P0341	Poor contact	• Phase signal register value is higher than 0, lower than 255 • Phase signal register value is not equal to 170 or 85	
P0342	Short circuit to ground	• Phase signal register value is equal to 0	
P0343	Short circuit to power supply	• Phase signal register value is equal to 255	

mashinesoft.com 09120146259

3. Diagnosis Procedures

Test Conditions	Details/Results/Actions
1. General inspection	
	A. Inspect the wiring harness connector E19 of intake camshaft position sensor for loose or poor contact. B. Inspect the intake camshaft position sensor for proper installation. C. Inspect the intake camshaft position sensor for normal clearance. Is it normal? **Y** Go to step 2. **N** Repair the fault.
2. Inspect the intake camshaft position sensor power supply circuit	
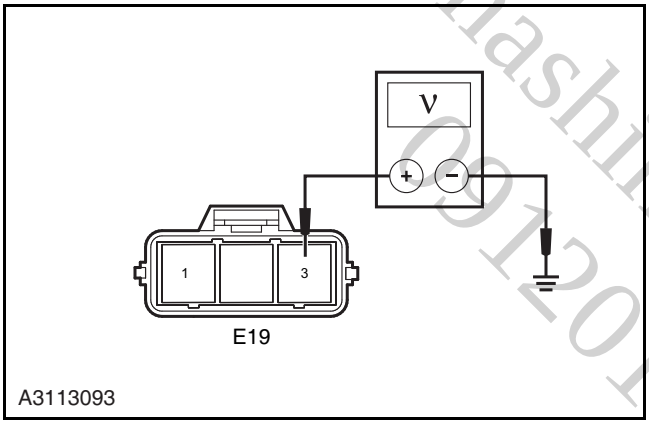	A. Turn the ignition switch to "LOCK" position. B. Disconnect the battery negative cable. C. Disconnect the wiring harness connector E19 of intake camshaft position sensor. D. Turn the ignition switch to position "ON". E. Measure the voltage between terminal 3 of intake camshaft position sensor wiring harness connector E19 and reliable grounding. **Standard Voltage Value: 4.5 ~ 5.5 V** Is the voltage normal? **Y** Go to step 4. **N** Repair the circuit faults between the terminal 3 of intake camshaft position sensor wiring harness connector E19 and the terminal 32 of ECM wiring harness connector E01.

mashinesoft.com 0912014625

Test Conditions	Details/Results/Actions
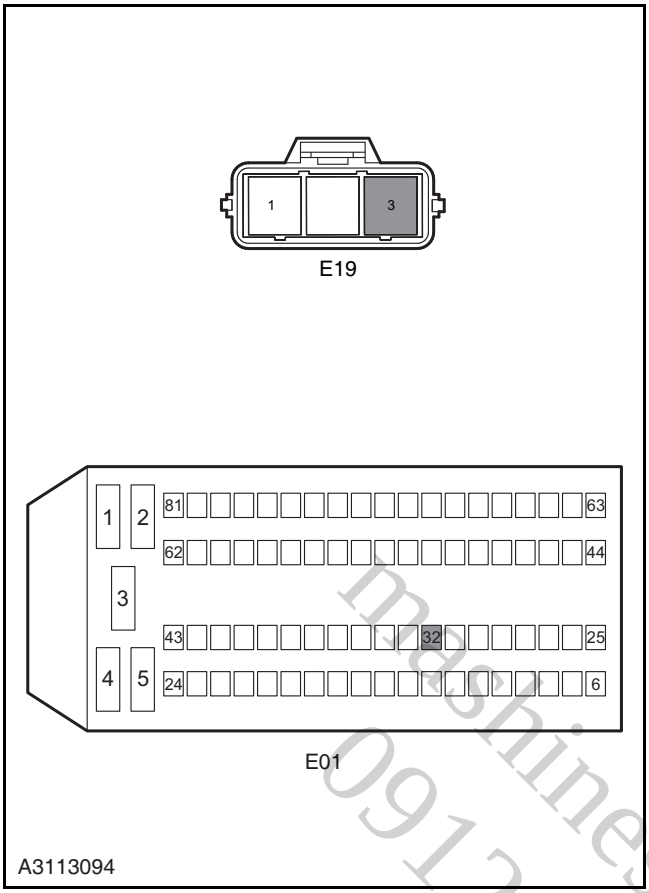	

machinesoft.com
09120146259

Test Conditions	Details/Results/Actions
3. Inspect the intake camshaft position sensor ground circuit	
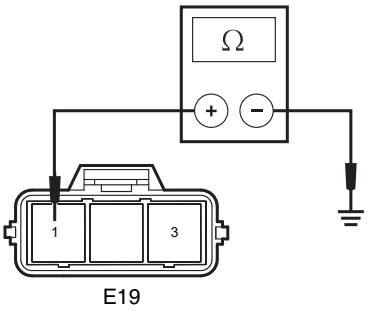 A3113095	A. Turn the ignition switch to "LOCK" position. B. Disconnect the wiring harness connector E19 of intake camshaft position sensor. C. Turn the ignition switch to position "ON". D. Measure the resistance between terminal 1 of intake camshaft position sensor wiring harness connector E19 and reliable grounding. **Standard Resistance Value: less than 5 Ω** Is the resistance normal? **Y** Go to step 4. **N** Repair the circuit between the terminal 1 of intake camshaft position sensor wiring harness connector E19 and the terminal 36 of ECM wiring harness connector E01.
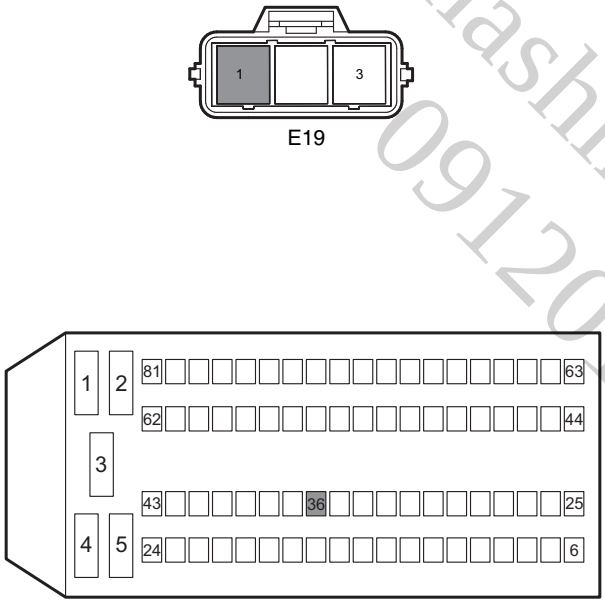 A3113096	

mashinesoft.com 09120146259

Test Conditions	Details/Results/Actions
4. Inspect the intake camshaft position sensor signal circuit	
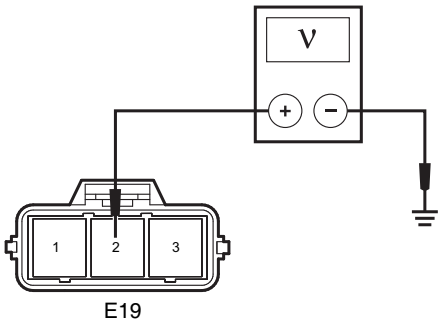 A3113097 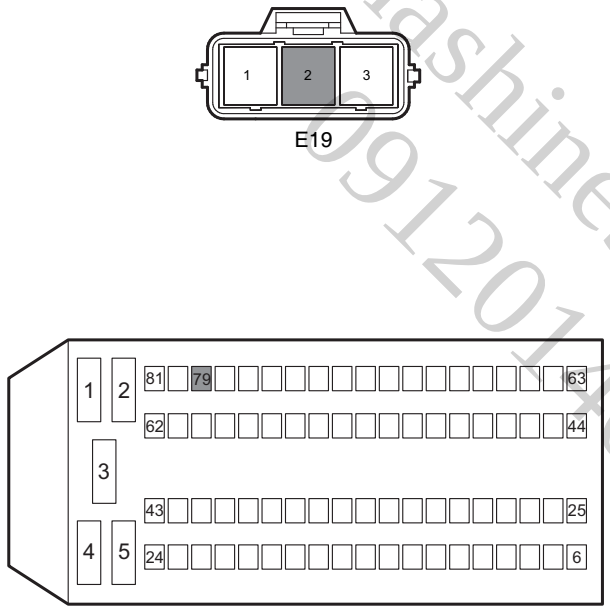 A3113098	A. Turn the ignition switch to "LOCK" position. B. Disconnect the camshaft phase sensor wiring harness connector E19. C. Turn the ignition switch to position "ON". D. Measure the voltage between terminal 2 of intake camshaft position sensor wiring harness connector E19 and reliable grounding. **Standard Voltage Value: 4.5 ~ 5.5 V** Is the voltage normal? **Y** Go to step 5. **N** Repair the circuit between the terminal 2 of intake camshaft position sensor wiring harness connector E19 and the terminal 79 of ECM wiring harness connector E01.

mashinesoft.com 09120146259

Test Conditions	Details/Results/Actions
5. Inspect the camshaft position sensor	
	A. Use a diagnostic tool to clear the DTC. B. Replace a intake camshaft position sensor that in good condition, and fasten it with the standard torque. C. Start the engine and run it to the normal operating temperature, then read DTC with diagnostic tool. Does fault code still exist? **Y** Go to step 6. **N** Replace the camshaft position sensor. **Refer to: Camshaft Position Sensor (3.1.13 Electrical control System - ME7 Removal and Installation).**
6. Inspect the camshaft position sensor signal wheel	
	A. Inspect the camshaft position sensor signal wheel installation location and tooth form. Is the camshaft position sensor signal wheel normal? **Y** Go to step 7. **N** Replace or repair the camshaft position sensor signal wheel. **Refer to: Camshaft and Hydraulic Rocker Component (3.1.2 Mechanical System, Disassembly and Assembly).**
7. Inspect the ECM power supply circuit	
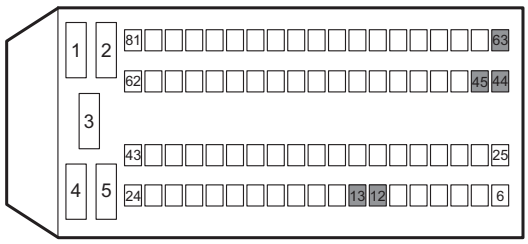 E01 A3113031	A. Turn the ignition switch to position "LOCK". B. Measure from the back of ECM wiring harness connector E01. C. Turn the ignition switch to "ON" position and use a multimeter to measure the voltage between the terminals 12, 13, 44, 45 and 63 of the ECM wiring harness connector E01 and the power supply. **Standard Voltage Value: 11 ~ 14 V** Is the voltage normal? **Y** Go to step 8. **N** Repair and inspect the ECM power supply circuit.

mashinesoft.com 0912014659

Test Conditions	Details/Results/Actions
8. Inspect the ECM ground circuit	
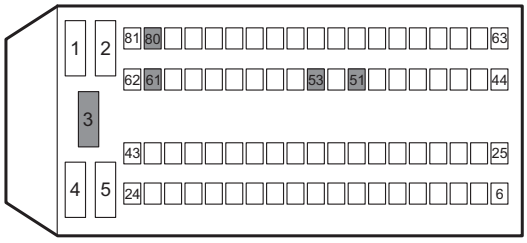 E01 A3113032	A. Turn the ignition switch to position "LOCK". B. Measure from the back of ECM wiring harness connector E01. C. Measure the resistance between the ECM wiring harness connector E01 terminal 3, 51, 53, 61 and 80 and the reliable grounding with a multimeter. **Standard Resistance Value: less than 5 Ω** Is the resistance value normal? **Y** Replace the engine control module. **Refer to: Engine Control Module (3.1.13 Electronic Control System - ME7, Removal and Installation).** **N** Inspect and repair the ECM ground circuit.

mashinesoft.com 09120146259

DTC P0420

1. DTC Description

Fault Code	Description	Definition
P0420	Three - way catalytic converter oxygen storage capacity aging (exceed the emission limits)	-

2. Possible Sources

Fault Code	Test Tactics	Setting Conditions (Control Strategy)	Fault
P0420	Hardware and circuit inspection	-	• Oxygen sensor fault • Catalytic converter • Mechanical fault

3. Diagnosis Procedures

Test Conditions	Details/Results/Actions
1. General inspection	
	A. Inspect the catalytic converter for following damage. • There is damage, dent or hole in catalytic converter. • As catalytic converter is too hot lead to serious discoloration. • There is fracture inside the catalytic converter. Catalytic converter is leaking. Is it normal? **Y** Go to step 2. **N** Replace catalytic converter.
2. Inspect the exhaust gas leakage	
	A. Start the engine. B. Inspect if there is exhaust leakage between engine and pre - catalytic oxygen sensor. C. Inspect if there is exhaust leakage between engine and post - catalytic oxygen sensor. Is there any exhaust leakage? **Y** Repair the leakage fault. **N** Go to step 3.

mashinesoft.com 09120146259

Test Conditions	Details/Results/Actions
3. Inspect the engine mechanical problem	
	A. Inspect if exhaust is with black smoke and too much blue smoke as the internal problems of the engine. Does the exhaust gas emit with too much black smoke and blue smoke? **Y** Repair engine mechanical. **N** Go to step 4.
4. Inspect the oxygen sensor aging (a new post - catalytic oxygen sensor and a aged pre - catalytic oxygen sensor be together may lead to the set of symptom code)	
	A. Inspect the repair record to see if the oxygen sensor has been replaced. If the post - catalytic oxygen sensor has been replaced while the pre - catalytic oxygen sensor has not been replaced? **Y** Replace pre - catalytic oxygen sensor as needed. **N** Replace the catalytic converter.

mashinesoft.com
09120146259

DTC P0444, P0458, P0459

1. DTC Description

Fault Code	Description	Definition
P0444	Carbon canister control valve control circuit open circuit	Operating voltage of carbon canister control valve is controlled by the main relay controlled by the ECM, and battery voltage is transmitted to terminal 2 of carbon canister control valve wiring harness connector E21 through terminal 45 of engine compartment electric center wiring harness connector C01 fuse EF23. Control circuit: ECM controls the grounding of terminal 1 of E21 through terminal 46 of ECM wiring harness connector E01.
P0458	Carbon canister control valve control circuit voltage too low	
P0459	Carbon canister control valve control circuit voltage too high	

2. Possible Sources

Fault Code	Test Tactics	Setting Conditions (Control Strategy)	Fault
P0444	Hardware or circuit inspect	Open circuit	• Solenoid valve • Solenoid circuit • ECM
P0458		Short circuit to ground	
P0459		Short circuit to power supply	

3. Diagnosis Procedures

Test Conditions	Details/Results/Actions
1. Use the diagnostic tool to carry out carbon canister solenoid valve active test	
	A. Connect the diagnostic tool to "fault diagnosis interface". B. Disconnect the vacuum pipe from carbon canister solenoid valve to active carbon canister. C. Start the engine, open the diagnostic tool. D. Enter the menu: "Changan Auto"/"CS35"/"UAES ME788"/"Motion Test"/"Canister Control Valve". E. Use the the diagnostic tool to open "carbon canister control valve", cover the solenoid vacuum interface with your fingers. Is there vacuum suction? **Y** Intermittent fault. **Refer to: Intermittent Fault Diagnosis (3.1.13 Electrical Control System - ME7, Symptom Diagnosis and Testing).** **N** Go to step 2.

mashinesoft.com 09120146159

Test Conditions	Details/Results/Actions
2. Inspect the carbon canister solenoid valve resistance value	
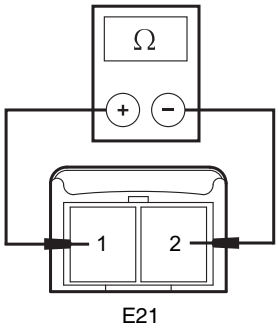 A3113099	A. Turn the ignition switch to "LOCK" position. B. Disconnect the active carbon canister solenoid valve wiring harness connector E21. C. Measure the resistance between the two terminals of the active carbon canister solenoid valve. **Standard Resistance Value: 20 ℃ (68ºF) 26 Ω** D. Connect the active carbon canister solenoid valve wiring harness connector E21. Is the resistance value normal? **Y** Go to step 3. **N** Replace the carbon canister solenoid.
3. Inspect the carbon canister solenoid power supply circuit	
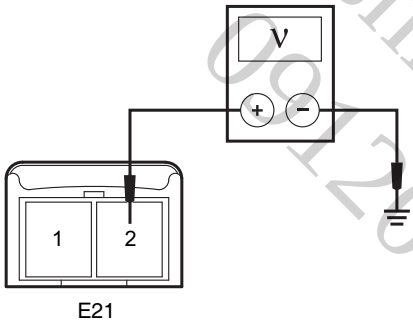 A3113100	A. Turn the ignition switch to position "LOCK". B. Disconnect the carbon canister solenoid wiring harness connector E21. C. Turn the ignition switch to position "ON". D. Measure the voltage between terminal 2 of active carbon canister solenoid valve wiring harness connector E21 and reliable grounding. **Standard Voltage Value: 11 ~ 14 V** E. Connect the carbon canister solenoid wiring harness connector E21. Is the voltage normal? **Y** Go to step 4. **N** Repair the circuit fault (include fuse EF23) between the terminal 2 of E21 and the terminal 45 of engine compartment wiring harness connector C01.
4. Inspect the carbon canister solenoid control circuit	

machinesoft.com 09/12/2014 6259

Test Conditions	Details/Results/Actions
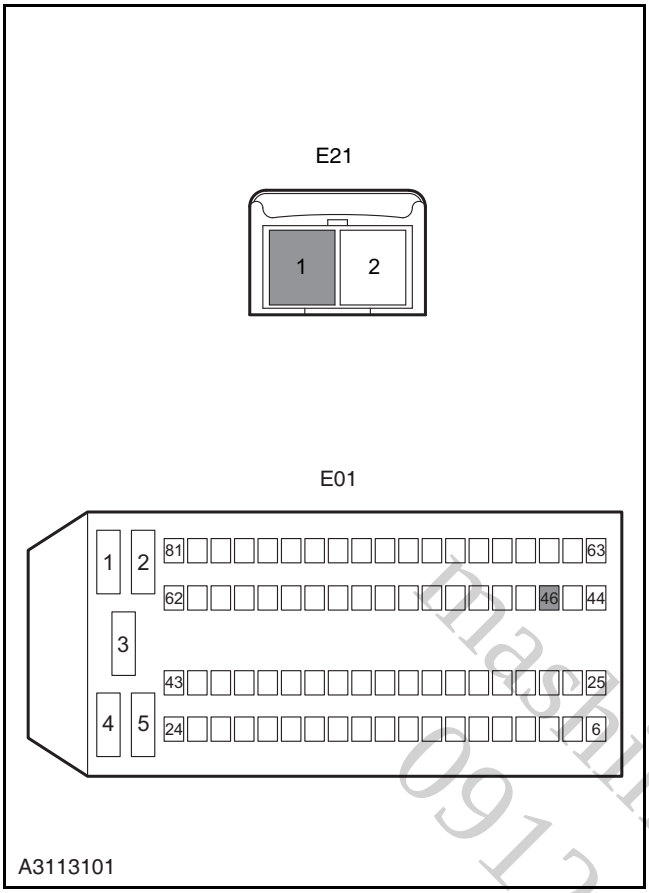	A. Turn the ignition switch to position "LOCK". B. Disconnect the carbon canister solenoid valve wiring harness connector E21. C. Disconnect the engine control module wiring harness connector E01. D. Measure the resistance between terminal 1 of active carbon canister solenoid valve wiring harness connector E21 and terminal 46 of ECM wiring harness connector E01. Inspect for open circuit. **Standard Resistance Value: less than 5 Ω** E. Measure the resistance between terminal 1 of carbon canister solenoid valve wiring harness connector E21 and reliable grounding. Inspect for short circuit to ground. **Standard Resistance Value: 10 MΩ or more** F. Measure the voltage between terminal 1 of carbon canister solenoid valve wiring harness connector E21 and reliable grounding. Inspect for short circuit to power supply. **Standard Voltage Value: 0 V** Is the circuit normal? **Y** Go to step 4. **N** Repair the fault circuit between the terminal 1 of carbon canister solenoid valve wiring harness connector E21 and the terminal 46 of ECM wiring harness connector E01.
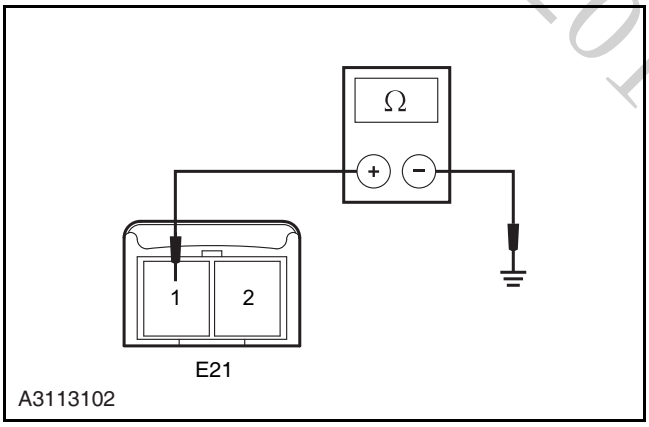	
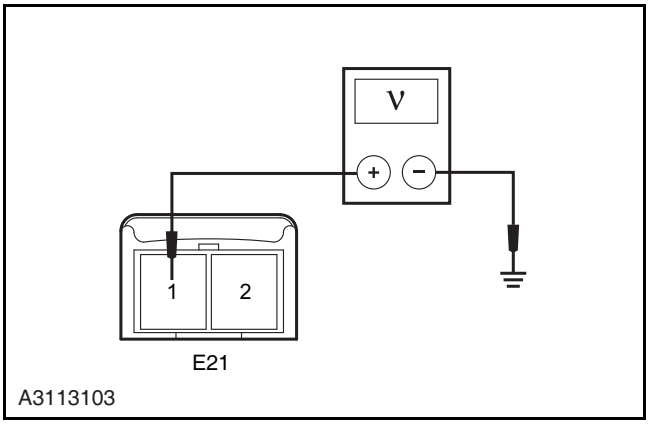	

machinesoft.com 09120146259

Test Conditions	Details/Results/Actions
5. Inspect the ECM power supply circuit	
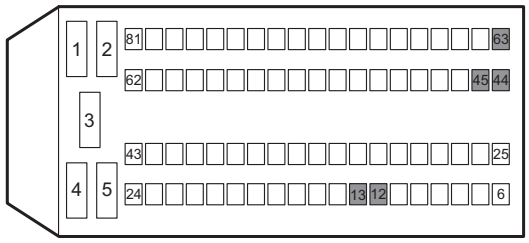 E01 A3113031	A. Turn the ignition switch to position "LOCK". B. Measure from the back of ECM wiring harness connector E01. C. Turn the ignition switch to "ON" position and use a multimeter to measure the voltage between the terminals 12, 13, 44, 45 and 63 of the ECM wiring harness connector E01 and the power supply. **Standard Voltage Value: 11 ~ 14 V** Is the voltage normal? **Y** Go to step 6. **N** Repair and inspect the ECM power supply circuit.
6. Inspect the ECM ground circuit	
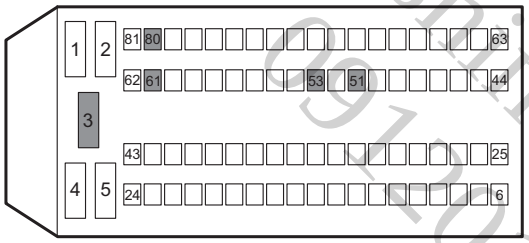 E01 A3113032	A. Turn the ignition switch to position "LOCK". B. Measure from the back of ECM wiring harness connector E01. C. Measure with a multimeter the resistance between the ECM wiring harness connector E01 terminal 3, 51, 53, 61 and 80 and the reliable grounding. **Standard Resistance Value: less than 5 Ω** Is the resistance value normal? **Y** Replace the engine control module. **Refer to: Engine Control Module (3.1.13 Electronic Control System - ME7, Removal and Installation).** **N** Inspect and repair the ECM ground circuit.

machinesoft.com 69120146259

DTC P0480 and P0692

1. DTC Description

Fault Code	Description	Definition
P0480	Cooling fan relay control circuit open circuit (low speed)	Cooling fan high and low - speed relay coil operating power is supplied by the main relay that controlled by ECM, ECM controls the work of relay through terminal 50 of ECM wiring harness connector E01. There is a drive circuit control relay coil equipped within the ECM for grounding. Drive circuit equips a feedback circuit for ECM, ECM determine the control circuit's open, grounding short circuit or voltage short circuit through monitoring the feedback voltage.
P0692	Cooling fan relay control circuit voltage is too high (low speed)	

2. Possible Sources

Fault Code	Test Tactics	Setting Conditions (Control Strategy)	Fault
P0480	Hardware circuit inspect	Open circuit	• Circuit • Relay and fuse • Fan motor
P0692		Short circuit to power supply	

3. Diagnosis Procedures

Refer to: Electronic Fan Low Speed Not Run Diagnosis (3.1.4 Cooling System, Symptom Diagnosis and Testing).

machinesoft.com 0912014259

DTC P0481 and P0694

1. DTC Description

Fault Code	Description	Definition
P0481	Cooling fan relay control circuit open circuit (high speed)	Cooling fan high and low - speed relay coil operating power is supplied by the main relay that controlled by ECM, ECM control the work of relay through terminal 68 of ECM wiring harness connector E01. There is a drive circuit control relay coil equipped within the ECM for grounding. Drive circuit equips a feedback circuit for ECM, ECM determine the control circuit's open, grounding short circuit or voltage short circuit through monitoring the feedback voltage.
P0694	Cooling fan relay control circuit voltage is too high (high speed)	

2. Possible Sources

Fault Code	Test Tactics	Setting Conditions (Control Strategy)	Fault
P0481	Hardware circuit inspect	Open circuit	• Circuit • Relay and fuse • Fan motor
P0694		Short circuit to power supply	

3. Diagnosis Procedures

Refer to: Electronic Fan High Speed Not Run Diagnosis (3.1.4 Cooling System, Symptom Diagnosis and Testing).

machinesoft.com 09120146259

DTC P0506, P0507

1. DTC Description

Fault Code	Description	Definition
P0506	Idle speed control speed less than the target idle speed	Throttle actuator control motor from is controlled by engine control module (ECM). DC motor in the throttle body drives the throttle. In order to reduce the idle speed and change the spark and fuel supply, engine control module instruct the throttle to close, thereby reducing the air flow that will access to the engine, so the idle is reduced. In order to increase idle speed, the engine control module to insteuct the throttle to open, so that more air could go through the throttle. Engine control module (ECM) conduct the calculation and control to engine target idling based on coolant temperature, speed compensation, slow adjustment, AC compensation, voltage compensation. Terminal 64and 65 of ECM wiring harness connector E01 connects to terminal 4 of throttle actuator control motor wiring harness connector E23. Terminal 66 and 67 of ECM wiring harness connector E01 connects to terminal 1 of throttle actuator control motor wiring harness connector E23.
P0507	Idle speed control speed higher than the target idle speed	

2. Possible Sources

Fault Code	Test Tactics	Setting Conditions (Control Strategy)	Fault
P0506	Throttle valve block at the small opening position	• Control integration reaches the minimum value • The difference between the static state target idle speed and the actual speed is smaller than 100 rpm • Idle state • Engine coolant temperature is higher than 80.3 °C • Air intake temperature is higher than 20.3 °C.	• Air Intake system • Exhaust system • Throttle body • ECM
P0507	Throttle valve block at the big opening position	• Idle integration reaches the minimum value • The difference between the static state target idle speed and the actual speed is smaller than 200 rpm • Idle state	

mashinesoft.com 09120146259

3. Diagnosis Procedures

CAUTION: Before the diagnostic procedure, observe the list of diagnostic data, analysis the accuracy of the data for quick troubleshooting.

Test Conditions	Details/Results/Actions
1. Inspect the DTC	
	A. Connect the diagnostic tool to fault diagnosis interface. B. Turn the ignition switch to position "ON". C. Select the menu: "Changan Auto"/"CS35"/"UAES ME 778"/"Read DTC", and read DTC. Is there any DTC besides DTC P0506 and P0507 ? **Y** Intermittent fault. **Refer to: DTC Diagnostic Procedure Index (3.1.13 Electrical Control System - ME7, DTC Diagnosis and Testing).** **N** Go to step 2.
2. Inspect the alternator	
	A. Use a diagnostic tool, observe if the system voltage parameter is normal. Is the generator normal? **Y** Go to step 3. **N** Inspect the alternator fault.
3. Inspect the air intake pressure sensor parameter	
	A. Use a diagnostic tool, observe if the air intake pressure sensor parameter is normal. **Refer to: Data Stream Chart (3.1.13 Electronic Control System - ME7, DTC Diagnosis and Testing).** Is the air intake pressure sensor parameter normal? **Y** Go to step 4. **N** Go to step 5.

mashinesoft.com 09120146250

Test Conditions	Details/Results/Actions
4. Inspect the A/C working state	
	A. Use a diagnostic tool, observe the working state of A/C is in same as its actual operation state. **Refer to: Data Stream Chart (3.1.13 Electronic Control System - ME7, DTC Diagnosis and Testing).** Compressor pull in, does the engine increase the speed? **Y** Go to step 7. **N** Go to step 5.
5. Inspect the air intake system, exhaust system	
	A. Inspect the air intake system, exhaust system. B. If there is too much carbon deposition at throttle. Does the above issues exist? **Y** Repair the fault. **N** Go to step 6.
6. Inspect the engine accessory drive belt	
	A. Inspect the engine accessories belt. **Refer to: Accessory Drive Belt Inspection (3.1.2 Mechanical System, General Procedures).** Is there any noise with the accessory drive belt? **Y** Inspect the accessory drive belt. **Refer to: Accessory Drive Belt Noise Diagnosis (3.1.2 Mechanical System, Symptom Diagnosis and Testing).** **N** Go to step 7.

mashinesoft.com 09120146259

Test Conditions	Details/Results/Actions
7. Inspect the ECM power supply circuit	
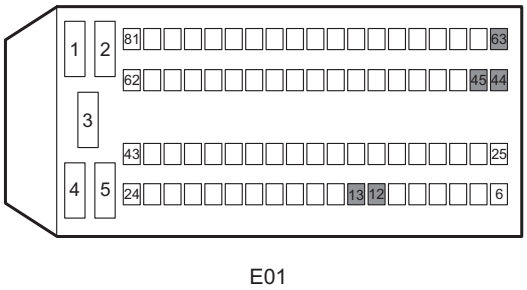 A3113031	A. Turn the ignition switch to position "LOCK". B. Measure from the back of ECM wiring harness connector E01. C. Turn the ignition switch to "ON" position and use a multimeter to measure the voltage between the terminals 12, 13, 44, 45 and 63 of the ECM wiring harness connector E01 and the power supply. **Standard Voltage Value: 11 ~ 14 V** Is the voltage normal? **Y** Go to step 8. **N** Repair and inspect the ECM power supply circuit.
8. Inspect the ECM ground circuit	
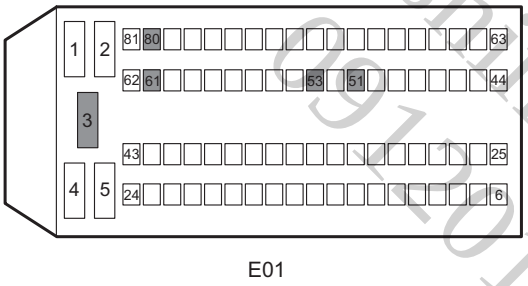 A3113032	A. Turn the ignition switch to position "LOCK". B. Measure from the back of ECM wiring harness connector E01. C. Measure the resistance between the ECM wiring harness connector E01 terminal 3, 51, 53, 61 and 80 and the reliable grounding with a multimeter. **Standard Resistance Value: less than 5 Ω** Is the resistance value normal? **Y** Replace the engine control module. **Refer to: Engine Control Module (3.1.13 Electronic Control System - ME7, Removal and Installation).** **N** Inspect and repair the ECM ground circuit.

machinesoft.com 69120146259

DTC P0560, P0562, P0563

1. DTC Description

Fault Code	Description	Definition
P0560	System battery voltage signal is unreasonable	ECM power supply consists of the following circuits: Battery power supply provides ECM with power through EF10 fuse and terminal 12 of ECM connector E01. When the ignition switch turns to position "ON", the power supply of the ignition that turns to position "ON" provides ECM with power through fuse IF06 and terminal 13 of engine control module connector E01. When ECM detects there is battery voltage at terminal 13 of ECM wiring harness connector E01, ECM controls terminal 14 of E01 to connect to ground, controls the main relay to pull in. After the main relay pulls in, battery power supply provides ECM with power through EF09 fuse and main relay and the terminal 44,45, 63 of E01.
P0562	System battery voltage is too low	
P0563	System battery voltage is too high	

2. Possible Sources

Fault Code	Test Tactics	Setting Conditions (Control Strategy)	Fault
P0560	Rationality inspection	• Battery voltage value less than 2.5 V	• Alternator • ECM power supply circuit • ECM
P0562	Lower limit value exceeding	• The starting time is greater than 180 s • Battery voltage value is bigger than 2.5 V, lower than 10.5 V	
P0563	Upper limit value exceeding	• Battery voltage value more than 17.02 V • Vehicle speed greater than 25 km/h	

mashinesoft.com 09120146259

3. Diagnosis Procedures

Test Conditions	Details/Results/Actions
1. Inspect the fuse EF09, EF10, EF23 and IF06	
	A. Turn the ignition switch to position "LOCK". B. Remove the fuse EF09, EF10, EF23 from engine compartment electric center. C. Remove the fuse IF06 from interior electric center. D. Use a multimeter to measure the between of the two fuse terminals to see if it conducts. Is the fuse normal? **Y** Go to step 2. **N** Replace the fuse.
2. Inspect the ECM power supply voltage	
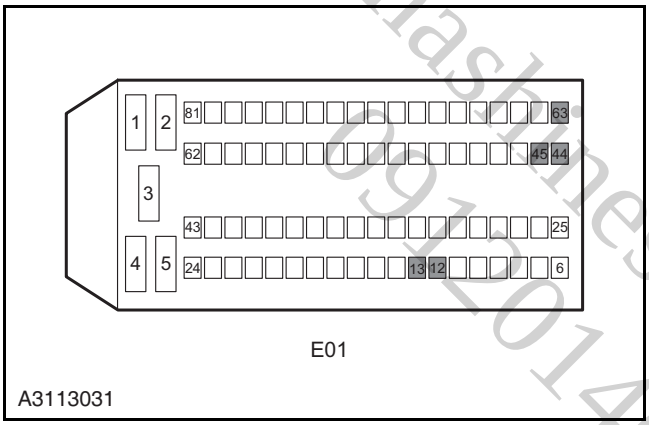	A. Turn the ignition switch to position "LOCK". B. Measure from the back of ECM wiring harness connector E01. C. Turn the ignition switch to position "ON". D. Make sure the main relay is working normally, otherwise replace it. E. Measure the voltage between terminal 12, 13, 44, 45, 63 of ECM wiring harness connector E01 and reliable grounding. **Standard Voltage Value: 11 ~ 14 V** Is the voltage normal? **Y** Go to step 4. **N** Go to step 3.

mashinesoft.com 09120146259

Test Conditions	Details/Results/Actions
3. Inspect the ECM power supply circuit	
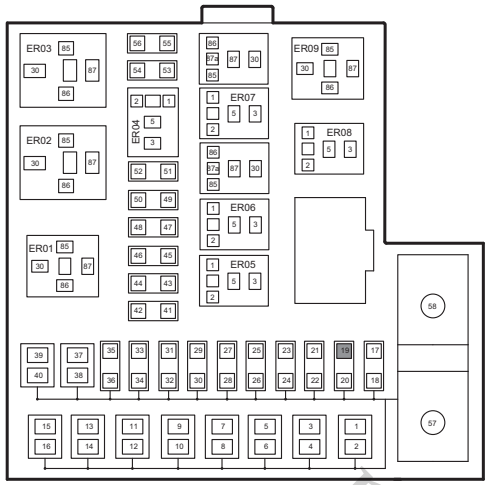 C01 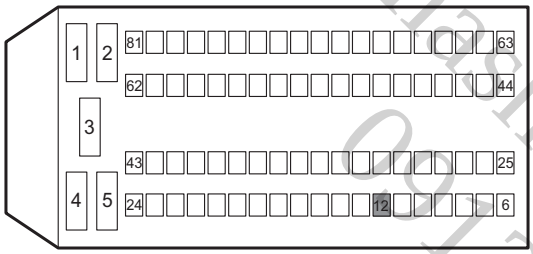 E01 A3113104	A. Turn the ignition switch to position "LOCK". B. Disconnect the battery negative cable. C. Remove the fuse EF10 of the engine compartment fuse and relay box connector C01. D. Measure the resistance value between terminal 19 of the eengine compartment fuse and relay box C01 and terminal 12 of ECM wiring harness connector E01. **Standard Resistance Value: less than 5 Ω** E. Remove the fuse IF05. F. Measure the resistance value between terminal 13 of I/P fuse and relay box P01 fuse IF06 and terminal 13 of ECM wiring harness connector E01. **Standard Resistance Value: less than 5 Ω** G. Remove the fuse EF23. H. Measure the resistance value between terminal 45 of the engine compartment fuse and relay box C01 fuse EF23 and terminal 44, 45 and 63 of ECM wiring harness connector E01. **Standard Resistance Value: less than 5 Ω** Is the circuit normal? **Y** Go to step 4. **N** Repair the fault circuit and replace the engine compartment electric center if necessary.

machinesoft.com 09120146259

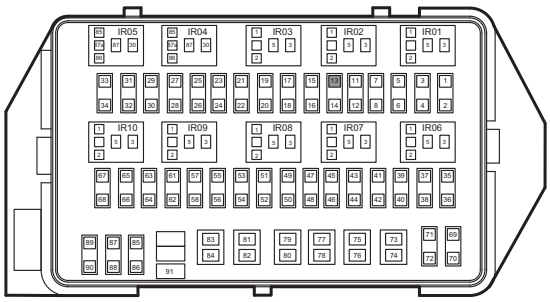

P01

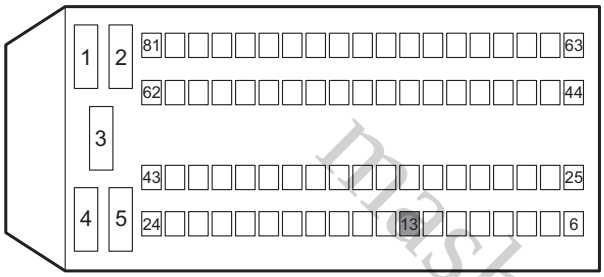

E01

A3113105

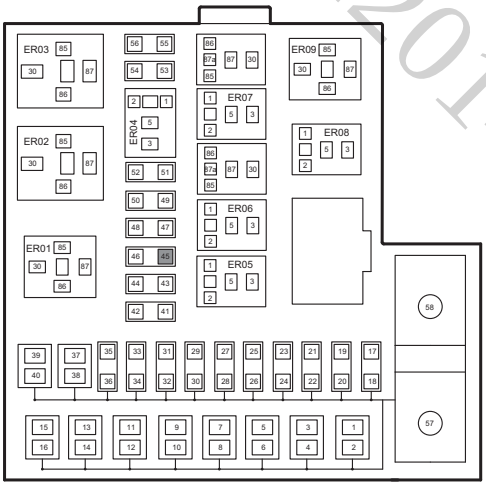

C01

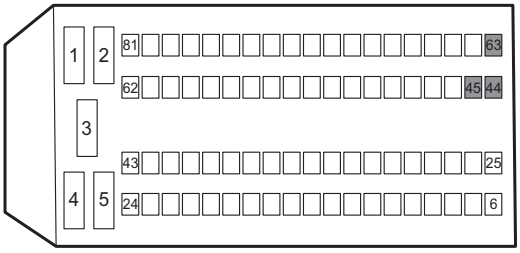

E01

A3113106

mashinesoft.com 09120146259

Test Conditions	Details/Results/Actions
4. Inspect the ECM ground circuit	
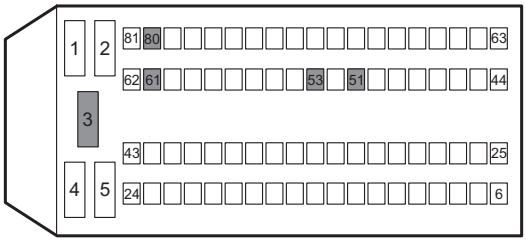 E01 A3113032	A. Turn the ignition switch to position "LOCK". B. Disconnect the battery negative cable. C. Disconnect the ECM wiring harness connector E01. D. Measure the resistance value between terminal 3, 51, 53, 61, 80 of ECM wiring harness connector E01 and reliable grounding. **Standard Resistance Value: less than 5 Ω** Is the resistance normal? **Y** Go to step 5. **N** Repair the fault circuit.
5. Inspect the charging system	
	A. Turn the ignition switch to position "LOCK". B. Inspect the battery voltage. **Standard Voltage Value: 11 ~ 14 V** C. Start the engine to normal temperature, shut down all the equipments, change the engine speed from idle speed to 4,000 rpm. D. Inspect the engine charging voltage. **Standard Voltage Value: 11 ~ 16 V** Is the voltage normal? **Y** Intermittent fault. **Refer to: Intermittent Fault Diagnosis (3.1.13 Electrical Control System - ME7, Symptom Diagnosis and Testing).** **N** Repair the battery or charging system fault.

mashinesoft.com 09120146259

DTC P0564

1. DTC Description

Fault Code	Description	Definition
P0564	Cruise control fault	-

2. Possible Sources

Fault Code	Test Tactics	Setting Conditions (Control Strategy)	Fault
P0564	Hardware circuit inspection	-	• Circuit • Cruise set switch • Brake switch • ECM

3. Diagnosis Procedures

Refer to: Cruise Fault Diagnosis (3.1.14 Cruise Control System, Symptom Diagnosis and Testing).

mashinesoft.com
09120146259

DTC P0571

1. DTC Description

Fault Code	Description	Definition
P0571	Brake switch signal circuit fault or relevancy asynchronous	ECM determines whether the vehicle is being braked by monitoring the voltage at terminals 21 and 58 of ECM wiring harness connector E01 so that ECM regulates the output power.

2. Possible Sources

Fault Code	Test Tactics	Setting Conditions (Control Strategy)	Fault
P0571	Hardware or circuit inspection	Open circuit Short circuit to ground Short circuit to power supply	• Circuit • Stop lamp switch • ECM

3. Diagnosis Procedures

Test Conditions	Details/Results/Actions
1. General inspection	
	A. Inspect the related wiring harness connectors for signs of damage, poor contact, aging or loose. Is it normal? **Y** Go to step 2. **N** Repair the fault.
2. Inspect the fuse	
	A. Inspect the I/P fuse and relay box fuse IF05 and IF21. Is it normal? **Y** Go to step 3. **N** Repair the fuse circuit, replace the fuse in rated capacity.

mashinesoft.com 09120146259

Test Conditions	Details/Results/Actions
3. Inspect the brake lamp switch power supply voltage	
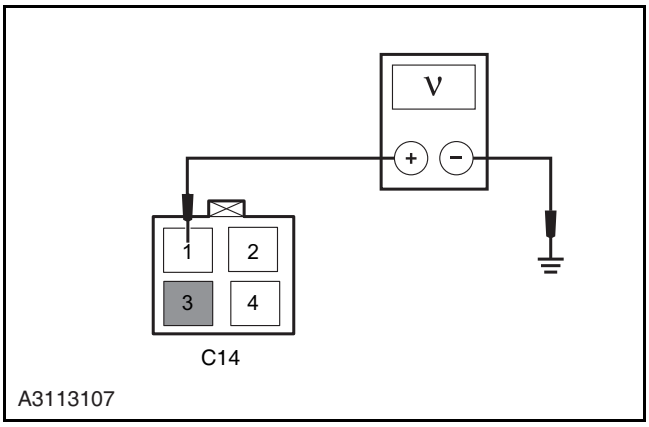	A. Turn the ignition switch to position "LOCK". B. Disconnect the brake lamp switch wiring harness connector C14. C. Turn the ignition switch to position "ON". D. Measure the voltage between terminals 1 & 3 of wiring harness connector C14 with reliable grounding. **Standard Voltage Value: 11 ~ 14 V** E. Connect the brake lamp switch wiring harness connector C14. Is the voltage normal? **Y** Go to step 4. **N** Repair the faulty circuit.
4. Inspect the brake lamp switch signal circuit	
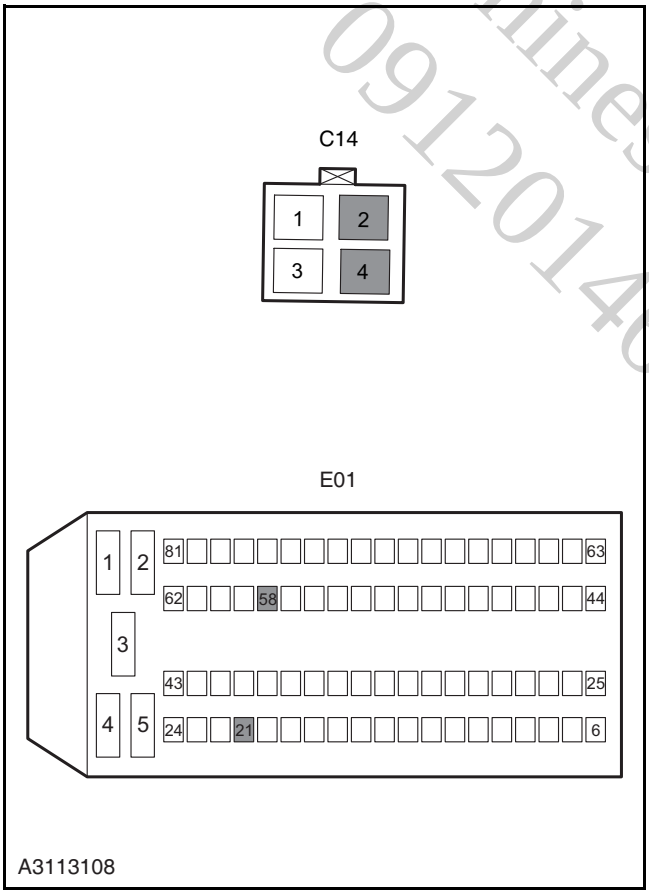	A. Turn the ignition switch to position "LOCK". B. Disconnect the battery negative cable. C. Disconnect the brake lamp switch wiring harness connector C14. D. Disconnect the engine control module wiring harness connector E01. E. Measure the circuit between terminal 2 of C14 and terminal 21 of E01 for open circuit, short to ground or short to power supply. F. Measure the circuit between terminal 4 of C14 and terminal 58 of E01 for open circuit, short to ground or short to power supply. Is the circuit normal? **Y** Go to step 5. **N** Repair the faulty circuit.

machinesoft.com 09120146258

Test Conditions	Details/Results/Actions
5. Inspect the brake lamp switch	
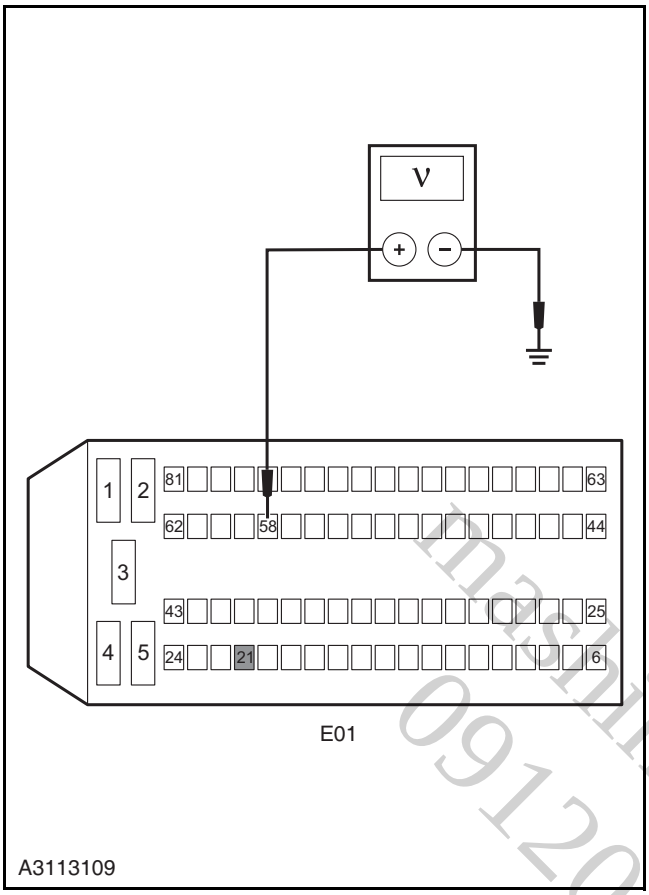	A. Turn the ignition switch to position "LOCK". B. Disconnect the engine control module wiring harness connector E01. C. Turn the ignition switch to "ON". D. Meanwhile measure the voltage between terminals 21 and 58 of engine control module wiring harness connector E01 and reliable grounding with a multimeter. **Standard Voltage:** **With brake not applied, voltage at terminal 58: 11 ~ 14 V** **voltage at terminal 21: 0 V** **With brake applied, voltage at terminal 21: 11 ~ 14 V** **voltage at terminal 58: 0 V** And the voltage to ground of both terminals are converted at the same time. Are both circuit voltage and its conversion normal? **Y** Go to step 6. **N** Replace the brake lamp switch.
6. Inspect the ECM power supply circuit	
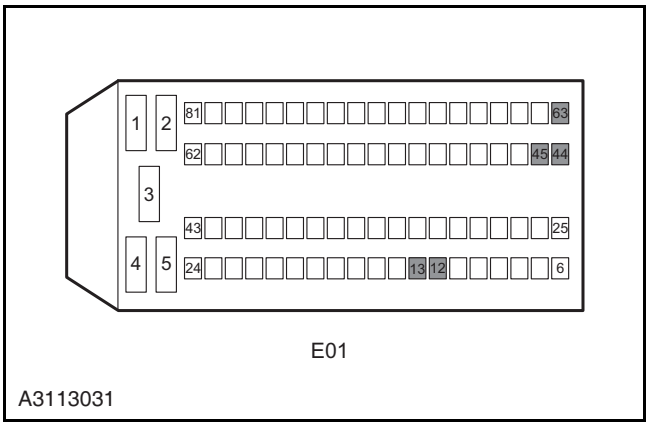	A. Turn the ignition switch to position "LOCK". B. Measure from the back of ECM wiring harness connector E01. C. Turn the ignition switch to "ON" position and use a multimeter to measure the voltage between the terminals 12, 13, 44, 45 and 63 of the ECM wiring harness connector E01 and the power supply. **Standard Voltage Value: 11 ~ 14 V** Is the voltage normal? **Y** Go to step 7. **N** Repair and inspect the ECM power supply circuit.

machinesoft.com 09120146119

Test Conditions	Details/Results/Actions
7. Inspect the ECM ground circuit	
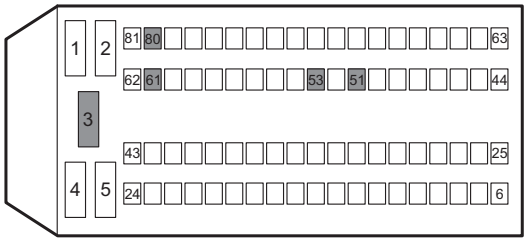 E01 A3113032	A. Turn the ignition switch to position "LOCK". B. Measure from the back of ECM wiring harness connector E01. C. Measure the resistance between the ECM wiring harness connector E01 terminal 3, 51, 53, 61 and 80 and the reliable grounding with a multimeter. **Standard Resistance Value: less than 5 Ω** Is the resistance value normal? **Y** Replace the engine control module. **Refer to: Engine Control Module (3.1.13 Electronic Control System - ME7, Removal and Installation).** **N** Inspect and repair the ECM ground circuit.

mashinesoft.com 09120146259

DTC P0219, P0602, P0604, P0605

1. DTC Description

Fault Code	Description	Definition
P0219	The engine speed exceeds the maximum speed limit	ECM internal program processing error and abnormal ECM power supply and grounding
P0602	Electrical control unit coding fault	
P0604	Electrical control unit RAM fault	
P0605	Electrical control unit ROM fault	

2. Possible Sources

Fault Code	Test Tactics	Setting Conditions (Control Strategy)	Fault
P0219	• Control unit EEPROM fault. • Diagnosis the diagnosis data identification code pro gramme diagnosis.	-	• ECM • Circuit
P0602			
P0604			
P0605			

mashinesoft.com 09120146259

3. Diagnosis Procedures

Test Conditions	Details/Results/Actions
1. Inspect the DTC	
	A. Connect the diagnostic tool to fault diagnosis interface. B. Turn the ignition switch to position "ON". C. Diagnose the engine system. Is there any DTC besides P0219, P0602, P0604, P0605? **Y** Repair the DTC besides P0219, P0602, P0604, P0605. **Refer to: DTC Diagnostic Procedure Index (3.1.13 Electrical Control System - ME7, DTC Diagnosis and Testing).** **N** Go to step 2.

Test Conditions	Details/Results/Actions
2. Inspect the ECM power supply circuit	
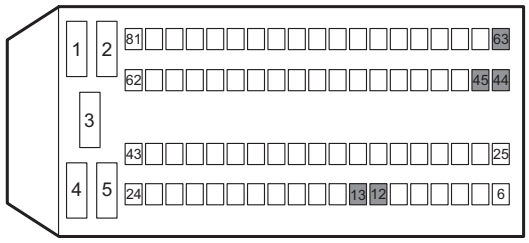 E01 A3113031	A. Turn the ignition switch to position "LOCK". B. Measure from the back of ECM wiring harness connector E01. C. Turn the ignition switch to "ON" position and use a multimeter to measure the voltage between the terminals 12, 13, 44, 45 and 63 of the ECM wiring harness connector E01 and the power supply. **Standard Voltage Value: 11 ~ 14 V** Is the voltage normal? **Y** Go to step 3. **N** Repair and inspect the ECM power supply circuit.
3. Inspect the ECM ground circuit	
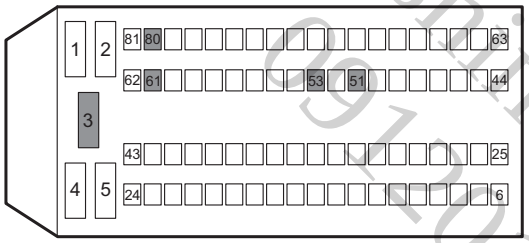 E01 A3113032	A. Turn the ignition switch to position "LOCK". B. Measure from the back of ECM wiring harness connector E01. C. Measure with a multimeter the resistance between the ECM wiring harness connector E01 terminal 3, 51, 53, 61 and 80 and the reliable grounding. **Standard Resistance Value: less than 5 Ω** Is the resistance value normal? **Y** Replace the engine control module. **Refer to: Engine Control Module (3.1.13 Electronic Control System - ME7, Removal and Installation).** **N** Inspect and repair the ECM ground circuit.

machinesoft.com 69120146259

DTC P0627, P0629

1. DTC Description

Fault Code	Description	Definition
P0627	Fuel pump relay control circuit open circuit	Working power of oil pump relay coil is supplied by main relay controlled by ECM. ECM controls the grounding of the oil pump relay ER04 of engine compartment fuse and relay box C01 terminal 85 through the ECM wiring harness connector E01 terminal 70 and the pump relay movement. There is a drive circuit control relay coil equipped within the ECM for grounding. Drive circuit provides a feedback circuit to ECM, ECM determines the control circuit open, short circuit to ground or to voltage through monitoring the feedback voltage.
P0629	Oil pump relay control circuit voltage is too high	

2. Possible Sources

Fault Code	Test Tactics	Setting Conditions (Control Strategy)	Fault
P0627	Hardware circuit inspect	Open circuit	• Relay • Relay circuit • ECM
P0629		Short circuit to power supply	

3. Diagnosis Procedures

Refer to: Fuel Pump Not Work Diagnosis (3.1.7 Fuel System, Symptom Diagnosis and Testing).

mashinesoft.com 09120146259

DTC P0645, P0647

1. DTC Description

Fault Code	Description	Definition
P0645	A/C compressor relay control circuit open circuit	A/C compressor relay operating power is supplied by the main relay that under the control of ECM ECM controls the internal grounding of A/C compressor relay through terminal 69 of ECM wiring harness connector E01, and the relay pickup. There is a drive circuit control relay coil equipped within the ECM for grounding. Drive circuit provides a feedback circuit to ECM, ECM determines the control circuit open, short circuit to ground or power through monitoring the feedback voltage.
P0647	A/C compressor relay control circuit voltage is too high	

2. Possible Sources

Fault Code	Test Tactics	Setting Conditions (Control Strategy)	Fault
P0645	Hardware circuit inspection	Open circuit	• A/C relay • Circuit • ECM
P0647		Short circuit to power supply	

3. Diagnosis Procedures

Refer to: A/C Compressor Not Work Diagnosis (4.1.1 Heating, Ventilation and Air Conditioning, Symptom Diagnosis and Testing).

mashinesoft.com 09120146259

DTC P0700

1. DTC Description

Fault Code	Description	Definition
P0700	MIL external request fault	Engine fault lamp is controlled by the instrument. When the ECM DTC is set and need to light up the fault lamp, ECM sends the Fault Lamp On instruction to the instrument through the special circuit, after receiving the instruction, the instrument lights on the engine fault lamp through internal circuit.

2. Possible Sources

Fault Code	Test Tactics	Setting Conditions (Control Strategy)	Fault
P0700	Hardware circuit inspect	Open circuit Short circuit to ground Short circuit to power supply	• Fault lamp circuit • Instrument • ECM

3. Diagnosis Procedures

Test Conditions	Details/Results/Actions
1. Inspect the instrument for other indicator state	
	A. Turn the ignition switch to position "ON". B. Inspect the state of all the instrument warning lamps. Is there any other warning light is abnormal on besides MIL fault indicator? **Y** Go to step 2. **N** Go to step 4.
2. Inspect the instrument power supply circuit	
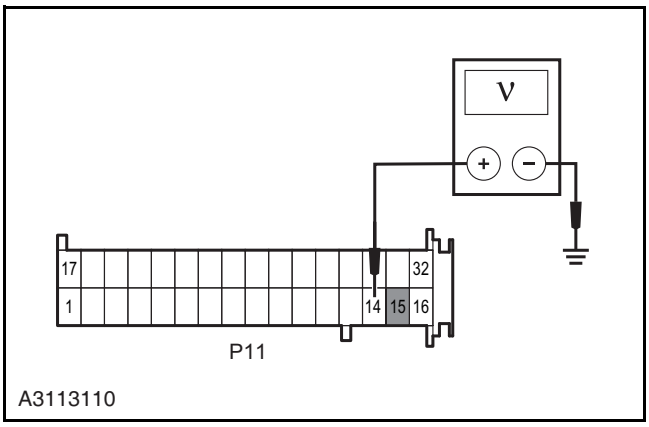	A. Turn the ignition switch to "ON" position, with a circuit tester inspect the power supply circuit of instrument cluster wiring harness connector P07, terminal 4 and 15. **Standard Voltage Value: 11 ~ 14 V** Is the voltage normal? **Y** Go to step 3. **N** Repair the instrument cluster power supply circuit.

machinesoft.com 09120146259

Test Conditions	Details/Results/Actions
3. Inspect the ground circuit of the instrument	
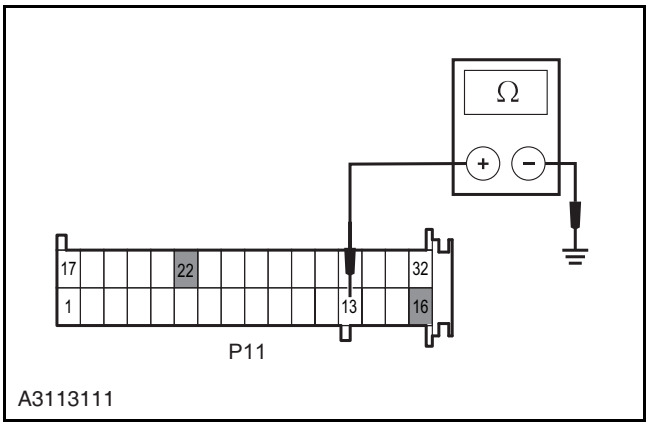	A. Turn the ignition switch to "LOCK" position, use a multimeter to inspect the ground circuit of instrument cluster wiring harness connector P11, terminal 13, 16 and 22. **Standard Resistance Value: less than 5 Ω** Is the resistance value normal? **Y** Go to step 4. **N** Repair the instrument cluster ground circuit.
4. Inspect the instrument performance	
	A. Turn the ignition switch to position "LOCK". B. Disconnect the battery cathode wiring harness for over 90 s. C. Disconnect the ECM wiring harness connector E01. D. Connect the battery negative cable. E. Get the terminal 15 of E01 short circuit, observe if the engine fault indicator is on . **Y** Go to step 5. **N** Replace the instrument, **Refer to: Instrument (4.3.2 Instrument, Removal and Installation).**
5. Inspect the CAN network circuit	
	A. Inspect and repair the CAN bus. **Refer to: CAN Bus Integrity Inspection (4.3.15 On-board Network System, Description and Operation).** Is the network normal? **Y** Go to step 6. **N** Inspect and repair the network circuit and replace it as necessary.

mashinesoft.com 09120146259

Test Conditions	Details/Results/Actions
6. Inspect the ECM power supply circuit	
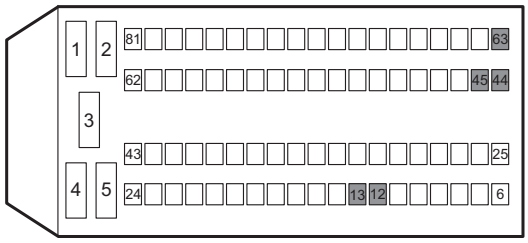 E01 A3113031	A. Turn the ignition switch to position "LOCK". B. Measure from the back of ECM wiring harness connector E01. C. Turn the ignition switch to "ON" position and use a multimeter to measure the voltage between the terminals 12, 13, 44, 45 and 63 of the ECM wiring harness connector E01 and the power supply. **Standard Voltage Value: 11 ~ 14 V** Is the voltage normal? **Y** Go to step 7. **N** Repair and inspect the ECM power supply circuit.
7. Inspect the ECM ground circuit	
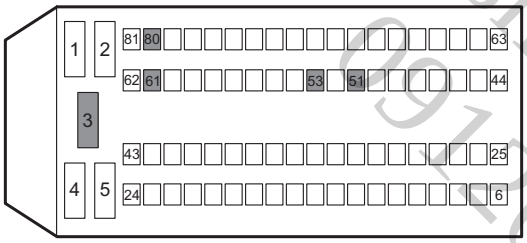 E01 A3113032	A. Turn the ignition switch to position "LOCK". B. Measure from the back of ECM wiring harness connector E01. C. Measure the resistance between the ECM wiring harness connector E01 terminal 3, 51, 53, 61 and 80 and the reliable grounding with a multimeter. **Standard Resistance Value: less than 5 Ω** Is the resistance value normal? **Y** Replace the engine control module. **Refer to: Engine Control Module (3.1.13 Electronic Control System - ME7, Removal and Installation).** **N** Inspect and repair the ECM ground circuit.

machinesoft.com 69120146259

DTC P0704

1. DTC Description

Fault Code	Description	Definition
P0704	Unreasonable clutch pedal switch signal	ECM monitors current status of clutch through terminal 74 of E01, with the clutch switch being normally on. With the ignition in the "ON" position, if ECM monitors the ground signal of terminal 74 of E01, it determines that the driver has applied the clutch pedal.

2. Possible Sources

Fault Code	Test Tactics	Setting Conditions (Control Strategy)	Fault
P0704	Hardware circuit inspect	Open circuit Short circuit to ground Short circuit to power supply Clutch pedal switch damaged	• Circuit • Clutch switch

3. Diagnosis Procedures

Test Conditions	Details/Results/Actions
1. General inspection	
	A. Inspect the related wiring harness connector for signs of damage, poor contact, aging or loose. Is it normal? **Y** Go to step 2. **N** Repair the fault.
2. Eliminate the DTC	
	A. Connect the fault diagnostic tool. B. Enter the ECM, select "Eliminate Fault Code" function. C. Operate the clutch pedal switch. D. Reread the DTC. Does fault code still exist? **Y** Go to step 3. **N** Intermittent fault. **Refer to: Intermittent Fault Diagnosis (3.1.13 Electronic Control System - ME7, Symptom Diagnosis and Testing).**
3. Inspect the signal circuit of clutch pedal switch	

machinesoft.com 08120146259

Test Conditions	Details/Results/Actions
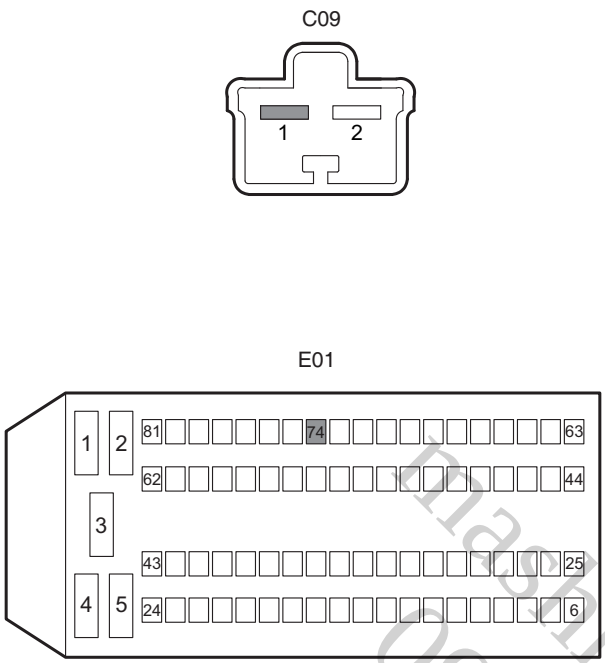 A3113116	A. Turn the ignition switch to position "LOCK". B. Disconnect the battery negative cable. C. Disconnect the clutch switch wiring harness connector C09 and ECM wiring harness connector E01. D. Measure the resistance between terminal 1 of clutch switch wiring harness connector C09 and terminal 74 of ECM wiring harness connector E01. **Standard Resistance Value: less than 5Ω** E. Measure the resistance between the terminal 1 of clutch switch wiring harness connector C09 and the reliable grounding. Inspect for short circuit to ground. **Standard Resistance Value: 10 MΩ or more** F. Measure the voltage value between the terminal 1 of clutch switch wiring harness connector C09 and the reliable grounding. Inspect for short circuit to power supply. **Standard Voltage Value: 0 V** G. Connect the clutch switch wiring harness connector C09 and ECM wiring harness connector E01. Is the circuit normal? **Y** Go to step 4. **N** Repair or replace the fault circuit.
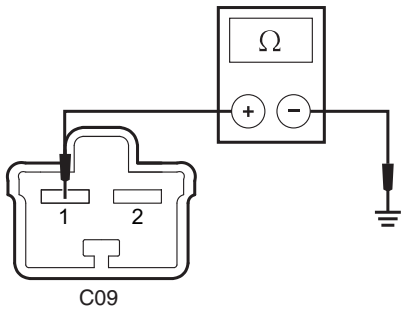 A3113117	
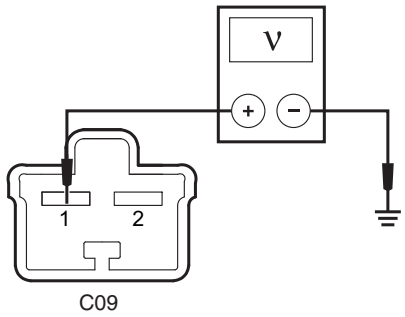 A3113118	

machinesoft.com 09120146259

Test Conditions	Details/Results/Actions
4. Inspect the clutch switch ground circuit	
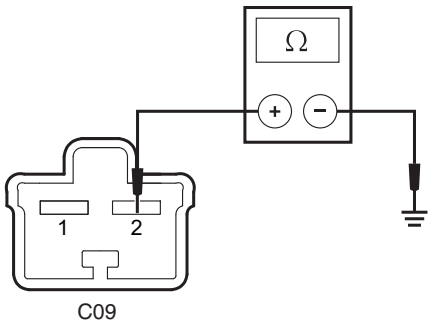 A3113119	A. Turn the ignition switch to position "LOCK". B. Disconnect the clutch switch wiring harness connector C09. C. Measure the resistance between the terminal 2 of the clutch switch wiring harness connector C09 and the reliable grounding. **Standard Resistance Value: less than 5 Ω** D. Connect the clutch switch wiring harness connector C09. Is the resistance normal? **Y** Go to step 5. **N** Repair the fault circuit.
5. Inspect the clutch switch	
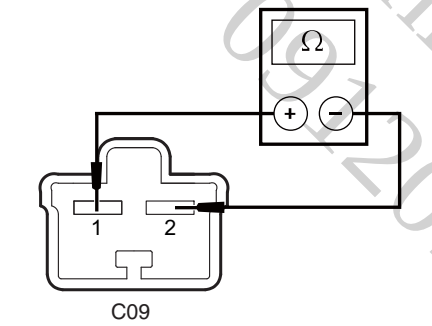 A3113120	A. Turn the ignition switch to position "LOCK". B. Disconnect the clutch switch wiring harness connector C09. C. Measure the resistance between two terminals of the clutch switch wiring harness connector C09. **Standard Resistance Value: 10 MΩ or more** D. Apply the clutch. E. Measure the resistance between two terminals of the clutch switch wiring harness connector C09. **Standard Resistance Value: less than 5 Ω** Is the resistance value normal? **Y** Go to step 6. **N** Replace the clutch switch.

mashinesoft.com 09120146259

Test Conditions	Details/Results/Actions
6. Inspect the ECM power supply circuit	
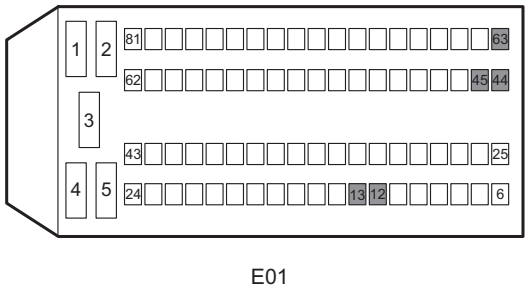 E01 A3113031	A. Turn the ignition switch to position "LOCK". B. Measure from the back of ECM wiring harness connector E01. C. Turn the ignition switch to "ON" position and use a multimeter to measure the voltage between the terminals 12, 13, 44, 45 and 63 of the ECM wiring harness connector E01 and the power supply. **Standard Voltage Value: 11 ~ 14 V** Is the voltage normal? **Y** Go to step 7. **N** Repair and inspect the ECM power supply circuit.
7. Inspect the ECM ground circuit	
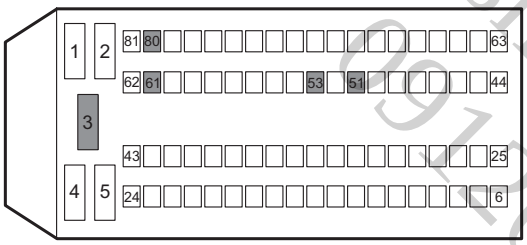 E01 A3113032	A. Turn the ignition switch to position "LOCK". B. Measure from the back of ECM wiring harness connector E01. C. Measure the resistance between the ECM wiring harness connector E01 terminal 3, 51, 53, 61 and 80 and the reliable grounding with a multimeter. **Standard Resistance Value: less than 5 Ω** Is the resistance value normal? **Y** Replace the engine control module. **Refer to: Engine Control Module (3.1.13 Electronic Control System - ME7, Removal and Installation).** **N** Inspect and repair the ECM ground circuit.

machinesoft.com 69120146259

DTC P1336, P1545, P1558、 P1568

1. DTC Description

Fault Code	Description	Definition
P1336	Electronic throttle safety monitoring torque limit function	The opening of the electronic throttle is controlled by ECM directly and the motor controls the opening of the drive valve plate through the deceleration gear mechanism. ECM controls the actuator motor connector E23 terminal 1 and 4 through the wiring harness connector E01 terminal 66 (or 67) and 64 (or 65) respectively.
P1545	The difference between the actual electronic throttle position and the target position exceeds the limit	
P1558	Too large electronic throttle open resistance	
P1568	Too large electronic throttle return resistance	

2. Possible Sources

Fault Code	Test Tactics	Setting Conditions (Control Strategy)	Fault
P1336	Rationality inspection	-	• Circuit • Throttle • ECM
P1545	Rationality inspection		
P1558	Hardware circuit inspect		
P1568			

3. Diagnosis Procedures

Test Conditions	Details/Results/Actions
1. General inspection	
	A. Inspect the actuator wiring harness connector for loose signs. B. Inspect the actuator appearance for damage. Is it normal? **Y** Go to step 2. **N** Repair the fault.

mashinesoft.com 09120146259

Test Conditions	Details/Results/Actions
2. Inspect the DTC	
	A. Connect the diagnostic tool to fault diagnosis interface. B. Turn the ignition switch to position "ON". C. Press the power button of the diagnostic tool. D. Select "Changan Auto" / "CS35" / "UMC ME788" / "Read DTC". E. Read the DTC. Are there any DTC expect P1336, P1545, P1558, P1568? **Y** Carry out the DTC diagnosis. **Refer to: DTC Diagnostic Procedure Index (3.1.13 Electrical Control System - ME7, DTC Diagnosis and Testing).** **N** Go to step 3.
3. Inspect the electronic throttle	
	A. Inspect the electronic throttle for carbon depositon or clamping. B. Remove the connector between the electronic throttle and air intake pipe. C. Turn the ignition switch to position "ON". D. One person step down the accelerator pedal, another person observe if the opening of electronic throttle changes with the change of accelerator pedal opening. Is the electronic throttle normal? **Y** Go to step 4. **N** Repair it or install a new one.

mashinesan.com 09120142259

Test Conditions	Details/Results/Actions
4. Inspect the electronic throttle control circuit	
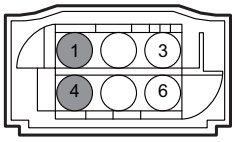 E23 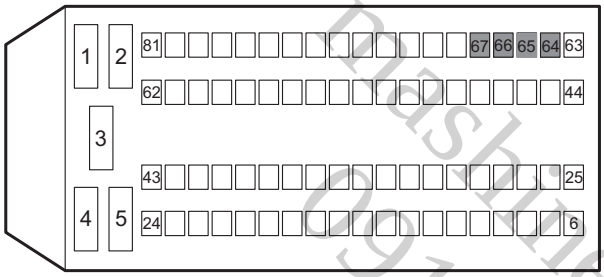 E01 A3113121	A. Turn the ignition switch to position "LOCK". B. Disconnect the electronic throttle wiring harness connector E23 and ECM wiring harness connector E01. C. Inspect the circuit between terminal 1 of electronic throttle wiring harness connector E23 and terminal 66 of ECM wiring harness connector E01 for short or open circuit. D. Inspect the circuit between terminal 4 electronic throttle wiring harness connector E23 and terminal 64, 65 of ECM wiring harness connector E01 for short or open circuit. Is the circuit normal? **Y** Go to step 5. **N** Repair or replace the fault circuit.
5. Inspect the ECM power supply circuit	
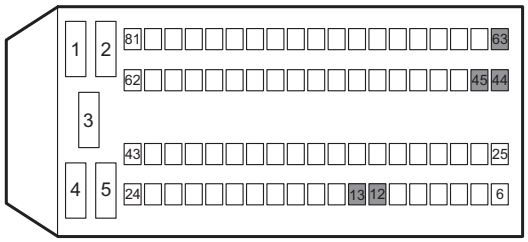 E01 A3113031	A. Turn the ignition switch to position "LOCK". B. Measure from the back of ECM wiring harness connector E01. C. Turn the ignition switch to "ON" position and use a multimeter to measure the voltage between the terminals 12, 13, 44, 45 and 63 of the ECM wiring harness connector E01 and the power supply. **Standard Voltage Value: 11 ~ 14 V** Is the voltage normal? **Y** Go to step 6. **N** Repair and inspect the ECM power supply circuit.

mashinesoft.com 09120146229

Test Conditions	Details/Results/Actions
6. Inspect the ECM ground circuit	
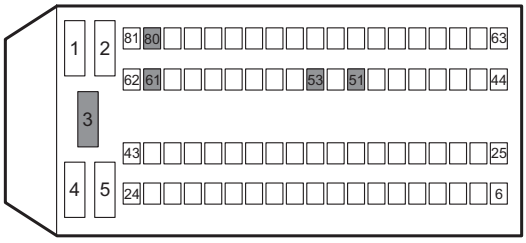 E01 A3113032	A. Turn the ignition switch to position "LOCK". B. Measure from the back of ECM wiring harness connector E01. C. Measure the resistance between the ECM wiring harness connector E01 terminal 3, 51, 53, 61 and 80 and the reliable grounding with a multimeter. **Standard Resistance Value: less than 5 Ω** Is the resistance value normal? **Y** Replace the engine control module. **Refer to: Engine Control Module (3.1.13 Electronic Control System - ME7, Removal and Installation).** **N** Inspect and repair the ECM ground circuit.

mashinesoft.com 09120146259

DTC P0606, P1559, P1564, P1565 , P1579, P1604

1. DTC Description

Fault Code	Description	Definition
P0606	Electronic throttle safety monitoring malfunction	The opening of the electronic throttle is controlled by ECM directly and the motor controls the opening of the drive valve plate through the deceleration gear mechanism. ECM controls the actuator motor connector E23 terminal 1 and 4 through the wiring harness connector E01 terminal 66 (or 67) and 64 (or 65) respectively.
P1559	Self - learning steps fault of electrical throttle	
P1564	The system voltage does not meet the electronic throttle self - learning conditions	
P1565	Initialization self - learning fault of the lower limit position of the electronic throttle	
P1579	Not meeting slf - learning conditions of electrical throttle	
P1604	Electronic throttle gain adjustment self - learning fault	

mashinesoft.com 09120146259

2. Possible Sources

Fault Code	Test Tactics	Setting Conditions (Control Strategy)	Fault
P0606	Rationality inspection	Electronic throttle safety monitoring malfunction	• Circuit • ECM
P1559		Idle control, self - adaption learning lose efficacy	
P1564		Idle control, self - adaption system low voltage	
P1565		Idle control, electronic throttle lower limit location can not be reached	
P1579		Idle control self-adaption can not be enabled	
P1604	ECM internal monitoring	Electronic throttle gain adjustment self - learning fault	

3. Diagnosis Procedures

Test Conditions	Details/Results/Actions
1. Inspect the control system for DTC P0606, P1559, P1564, P1565, P1579, P1604	
	A. Connect the diagnostic tool to fault diagnosis interface. B. Turn the ignition switch to position "ON". C. Select "Changan Auto" / "CS35" / "UMC ME788" / "Read DTC". D. Read the DTC, are there any DTC expect DTC P0606, P1559, P1564, P1565, P1579, P1604? **Y** Carry out the DTC diagnosis. **Refer to: DTC Diagnostic Procedure Index (3.1.13 Electrical Control System - ME7, DTC Diagnosis and Testing).** **N** Go to step 2.
2.Inspect the electronic throttle	
	A. Inspect the electronic throttle for carbon depositon or clamping. **Y** Clean it. **N** Go to step 3.
3. Inspect the ECM power supply circuit	
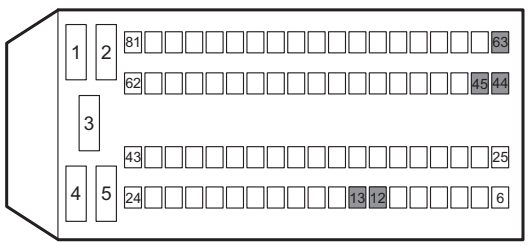 E01 A3113031	A. Turn the ignition switch to position "LOCK". B. Measure from the back of ECM wiring harness connector E01. C. Turn the ignition switch to "ON" position and use a multimeter to measure the voltage between the terminals 12, 13, 44, 45 and 63 of the ECM wiring harness connector E01 and the power supply. **Standard Voltage Value: 11 ~ 14 V** Is the voltage normal? **Y** Go to step 4. **N** Repair and inspect the ECM power supply circuit.

mashinesoft.com 09120146259

Test Conditions	Details/Results/Actions
4. Inspect the ECM ground circuit	
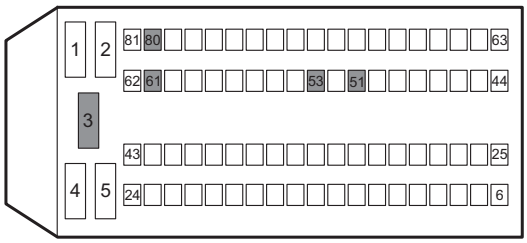 E01 A3113032	A. Turn the ignition switch to position "LOCK". B. Measure from the back of ECM wiring harness connector E01. C. Measure with a multimeter the resistance between the ECM wiring harness connector E01 terminal 3, 51, 53, 61 and 80 and the reliable grounding. **Standard Resistance Value: less than 5 Ω** Is the resistance value normal? **Y** Replace the engine control module. **Refer to: Engine Control Module (3.1.13 Electronic Control System - ME7, Removal and Installation).** **N** Inspect and repair the ECM ground circuit.

mashinesoft.com 0912014259

DTC P1610, P1626, P1631

1. DTC Description

Fault Code	Description	Definition
P1610	Not programming error of secret key and security code	When the car is at the security state, provide the anti - theft signal for ECM by K-Line network. When the car is at the non - security state, provide the release signal for ECM by K-Line network. Every time the ignition needs to verify the legitimacy of the key, and when the key authentication fails, the anti - theft state changes to the security state and does not make any response to the request of the ECM, in order to prevent the car starts.
P1626	Anti - theft authentication communication error or no response of the anti - theft device	
P1631	Anti - theft validation failure	

2. Possible Sources

Fault Code	Test Tactics	Setting Conditions (Control Strategy)	Fault
P1610	Hardware or circuit inspection	-	• Circuit • Anti - theft device • BCM • Key chip
P1626			
P1631			

3. Diagnosis Procedures

Refer to: ECM Always Detect That the Immobilizer Is Enabled Fault Diagnosis (3.1.12 Engine Immobilizer System, Symptom Diagnosis and Testing).

mashinesoft.com 09120146259

DTC P2106

1. DTC Description

Fault Code	Description	Definition
P2106	Electronic throttle dirve level fault	

2. Possible Sources

Fault Code	Test Tactics	Setting Conditions (Control Strategy)	Fault
P2106	Throttle actuator control system force power limitation	• The engine is at the idle state. • The accelerator pedal position sensor signal 1 and signal 2 is disconnected at the same time and relative sensor fault exists. • Relative sensor DTC appears and the engine enters into the limit execution state.	• Solenoid • Solenoid circuit • ECM

3. Diagnosis Procedures

Test Conditions	Details/Results/Actions
1. Inspect if there is DTC other than DTC P2106 in control system	
	A. Connect the diagnostic tool to fault diagnosis interface. B. Turn the ignition switch to position "ON". C. Press the power button of the diagnostic tool. D. Select "Changan Auto" / "CS35" / "UMC ME788" / "Read DTC". E. Read the DTC. Is there any DTC other than DTC P2106 ? **Y** Carry out the DTC diagnosis. **Refer to: DTC Diagnostic Procedure Index (3.1.13 Electrical Control System - ME7, DTC Diagnosis and Testing).** **N** Go to step 2.

mashinesoft.com 09120146259

Test Conditions	Details/Results/Actions
2. Use the diagnostic tool to confirm the DTC is stored again	
	A. Connect the diagnostic tool to diagnosis test interface. B. Turn the ignition switch to position "ON". C. Clear the DTC. D. Start the engine and idle heating running at least 5 min. E. Read the control system DTC again, ensure if there is any DTC in system? **Y** Go to step 3. **N** Intermittent fault. **Refer to: Intermittent Fault Diagnosis (3.1.13 Electronic Control System - ME7, Symptom Diagnosis and Testing).**
3. Inspect the ECM power supply circuit	
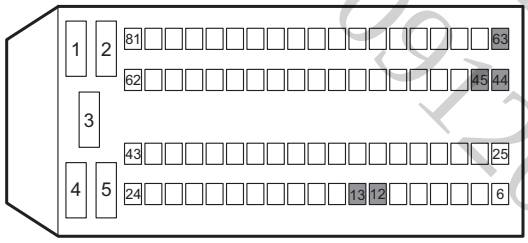 E01 A3113031	A. Turn the ignition switch to position "LOCK". B. Measure from the back of ECM wiring harness connector E01. C. Turn the ignition switch to "ON" position and use a multimeter to measure the voltage between the terminals 12, 13, 44, 45 and 63 of the ECM wiring harness connector E01 and the power supply. **Standard Voltage Value: 11 ~ 14 V** Is the voltage normal? **Y** Go to step 4. **N** Repair and inspect the ECM power supply circuit.
4. Inspect the ECM ground circuit	
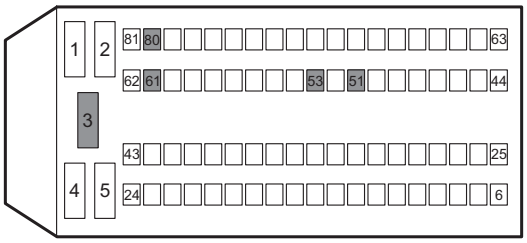 E01 A3113032	A. Turn the ignition switch to position "LOCK". B. Measure from the back of ECM wiring harness connector E01. C. Measure the resistance between the ECM wiring harness connector E01 terminal 3, 51, 53, 61 and 80 and the reliable grounding with a multimeter. **Standard Resistance Value: less than 5 Ω** Is the resistance value normal? **Y** Replace the engine control module. **Refer to: Engine Control Module (3.1.13 Electronic Control System - ME7, Removal and Installation).** **N** Inspect and repair the ECM ground circuit.

mashinesoft.com 0912014259

DTC P2122, P2123, P2138

1. DTC Description

Fault Code	Description	Definition
P2122	Electronic accelerator pedal position sensor 1 signal voltage too low	• ECM provides 5 V reference voltage to terminal 3 of electrical accelerator pedal position sensor wiring harness connector C16 through terminal 33 of ECM wiring harness connector E01. • Electrical accelerator pedal positions sensor 1 provides signal voltage to terminal 16 of ECM wiring harness connector E01 through terminal 4 of wiring harness connector C16. • ECM sets the electronic accelerator pedal position sensor 1 wiring harness connector C16 terminal 5 to the low potential position through the ECM wiring harness connector E01 terminal 36.
P2123	Electronic accelerator pedal position sensor 1 signal voltage too high	
P2138	Unreasonable electronic accelerator pedal position sensor signal	

2. Possible Sources

Fault Code	Test Tactics	Setting Conditions (Control Strategy)	Fault
P2122	Hardware, circuit fault	Signal circuit voltage too low, short circuit to ground	• Sensor circuit • Sensor • ECM
P2123		Signal circuit voltage too high, short circuit to power supply	
P2138		ECM compares the APP1 and APP2 input signal, APP1 input signal at all times is two times of APP2, if ECM monitor the APP1 and APP2 input signal can not satisfy this rule, it will report this DTC.	

mashinesoft.com 09120146259

3. Diagnosis Procedures

Test Conditions	Details/Results/Actions
1. General inspection	
	A. Inspect the sensor wiring harness connector for loose signs. B.Inspect the sensor appearance for damage. Is it normal? **Y** Go to step 2. **N** Repair the fault.

Test Conditions	Details/Results/Actions
2. Inspect the electronic accelerator pedal position sensor 1 power supply circuit	
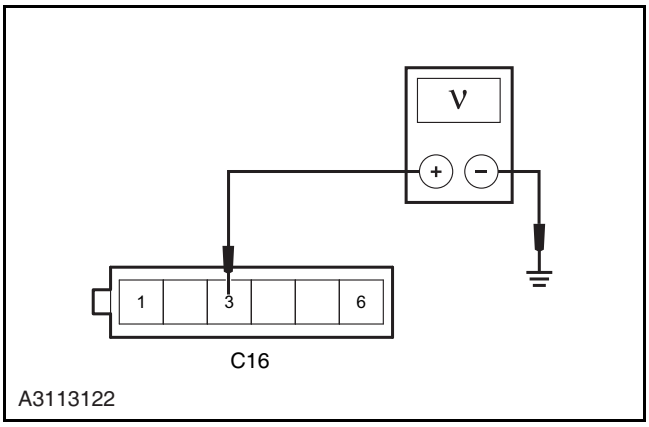	A. Turn the ignition switch to position "LOCK". B. Disconnect electronic accelerator pedal position sensor wiring harness connector C16. C. Turn the ignition switch to position "ON". D. Measure the voltage between the terminal 3 of electronic accelerator pedal position sensor wiring harness connector C16 and reliable grounding. **Standard Voltage Value: 4.5 ~ 5.5 V** E. Connect the electronic accelerator pedal position sensor wiring harness connector C16. Is the voltage normal? **Y** Go to step 3. **N** Repair the fault circuit between terminal 3 of electronic accelerator pedal position sensor wiring harness connector C16 and terminal 33 of ECM E01.
3. Inspect the electronic accelerator pedal position sensor 1 ground circuit	
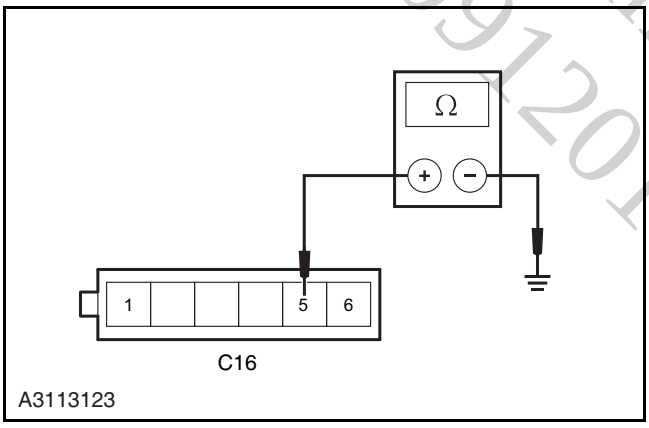	A. Turn the ignition switch to position "LOCK". B. Disconnect the electronic accelerator pedal position sensor wiring harness connector C16. C. Turn the ignition switch to position "ON". D. Measure the resistance between the terminal 5 of electronic accelerator pedal position sensor wiring harness connector C16 and reliable grounding. **Standard Resistance Value: less than 5 Ω** E. Connect the electronic accelerator pedal position sensor wiring harness connector C16. Is the resistance value normal? **Y** Go to step 4. **N** Repair the fault circuit between terminal 5 of electronic accelerator pedal position sensor wiring harness connector C16 and terminal 36 of ECM wiring harness connector E01.
4. Inspect the electronic accelerator pedal position sensor 1 signal circuit	

mashinesoft.com 09120146259

Test Conditions	Details/Results/Actions
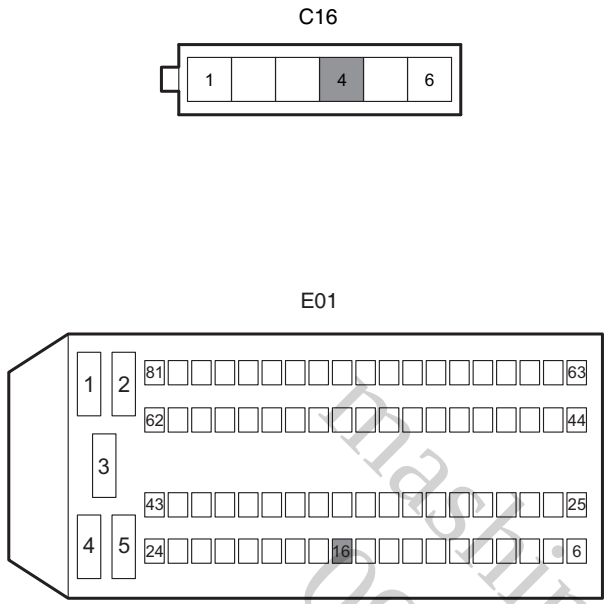 A3113124	A. Turn the ignition switch to position "LOCK". B. Disconnect the battery negative cable. C. Disconnect the electronic accelerator pedal position sensor wiring harness connector C16. D. Disconnect the engine control module wiring harness connector E01. E. Measure the resistance value between terminal 4 of electronic accelerator pedal position sensor wiring harness connector C16 and terminal 16 of ECM wiring harness connector E01, and check for open circuit. **Standard Resistance Value: less than 5 Ω** F. Measure the resistance value between the terminal 4 of electronic accelerator pedal position sensor wiring harness connector C16 and the reliable grounding. Inspect for short circuit to ground. **Standard Resistance Value: 10 MΩ or more** G. Measure the voltage between the terminal 4 of electronic accelerator pedal position sensor wiring harness connector C16 and the reliable grounding. Inspect for short circuit to power supply. **Standard Voltage Value: 0 V** H. Connect the wiring harness connectors C16 and E01. Is the circuit normal? **Y** Go to step 5. **N** Repair the fault circuit between terminal 4 of electronic accelerator pedal position sensor wiring harness connector C16 and terminal 16 of ECM wiring harness connector E01.
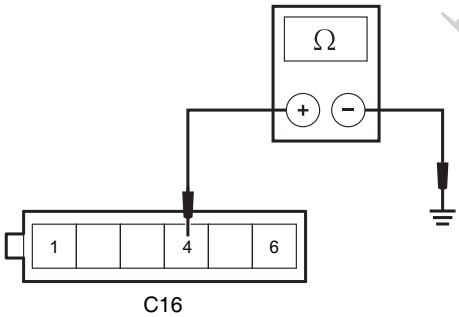 A3113125	
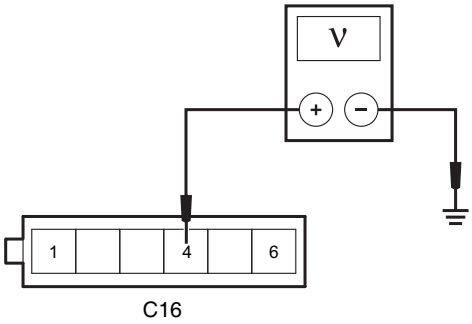 A3113126	

machinesoft.com 09120146229

Test Conditions	Details/Results/Actions
5. Inspect the electronic accelerator pedal position sensor 1 signal voltage	
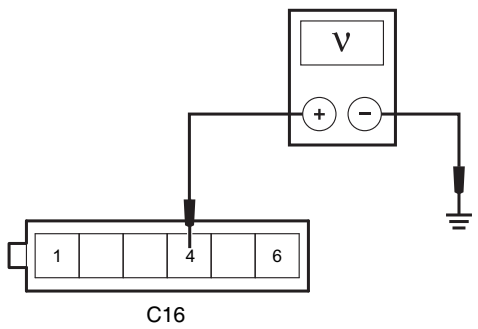 A3113126	A.Turn the ignition switch to position "ON". B. Measure the voltage (continuously changing analog voltage) at terminal 4 of wiring harness connector C16 of electronic accelerator pedal position sensor 1 from the back, or observe the data stream. **Standard Voltage:** **Do not depress the accelerator pepal 0.72 ~ 0.74 V** **Step on the accelerator pedal to the end 3.95 V** Is the voltage normal? **Y** Go to step 6. **N** Replace the electronic accelerator pedal position sensor.
6. Inspect the ECM power supply circuit	
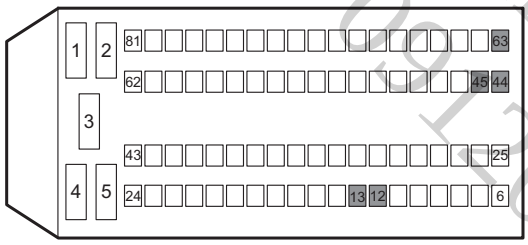 A3113031	A.Turn the ignition switch to position "LOCK". B. Measure from the back of ECM wiring harness connector E01. C. Turn the ignition switch to "ON" position and use a multimeter to measure the voltage between the terminals 12, 13, 44, 45 and 63 of the ECM wiring harness connector E01 and the power supply. **Standard Voltage Value: 11 ~ 14 V** Is the voltage normal? **Y** Go to step 7. **N** Repair and inspect the ECM power supply circuit.
7. Inspect the ECM ground circuit	
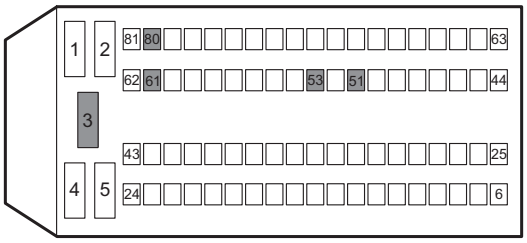 A3113032	A.Turn the ignition switch to position "LOCK". B. Measure from the back of ECM wiring harness connector E01. C. Measure the resistance between the ECM wiring harness connector E01 terminal 3, 51, 53, 61 and 80 and the reliable grounding with a multimeter. **Standard Resistance Value: less than 5 Ω** Is the resistance value normal? **Y** Replace the engine control module. **Refer to: Engine Control Module (3.1.13 Electronic Control System - ME7, Removal and Installation).** **N** Inspect and repair the ECM ground circuit.

machineart.com 00120146259

DTC P2127, P2128, P2138

1. DTC Description

Fault Code	Description	Definition
P2127	Electronic accelerator pedal position sensor 2 signal voltage too low	• ECM provides 5 V reference voltage to terminal 2 of electrical accelerator pedal position sensor 2 wiring harness connector C16 through terminal 32 of ECM wiring harness connector E01. • Electrical accelerator pepal positions sensor 2 provides signal voltage to terminal 40 of ECM wiring harness connector E01 through terminal 1 of wiring harness connector C16. • ECM position terminal 6 of electrical accelerator pedal position sensor 1 wiring harness connector C16 at low electrical potential through terminal 35 of ECM wiring harness connector E01.
P2128	Electronic accelerator pedal position sensor 2 signal voltage too high	
P2138	Unreasonable electronic accelerator pedal position sensor signal	

2. Possible Sources

Fault Code	Test Tactics	Setting Conditions (Control Strategy)	Fault
P2127	Hardware, circuit fault	Signal circuit voltage too low, short circuit to ground	• Sensor circuit • Sensor • ECM
P2128		Signal circuit voltage too high, short circuit to power supply	
P2138		ECM compares the APP1 and APP2 input signal, APP1 input signal at all times is two times of APP2, if ECM monitor the APP1 and APP2 input signal can not satisfy this rule, it will report this DTC.	

mashinesoft.com 09120146259

3. Diagnosis Procedures

Test Conditions	Details/Results/Actions
1. General inspection	
	A. Inspect the sensor wiring harness connector for loose signs. B. Inspect the sensor appearance for damage. Is it normal? **Y** Go to step 2. **N** Repair the fault.

Test Conditions	Details/Results/Actions
2. Inspect the electronic accelerator pedal position sensor 2 power supply circuit	
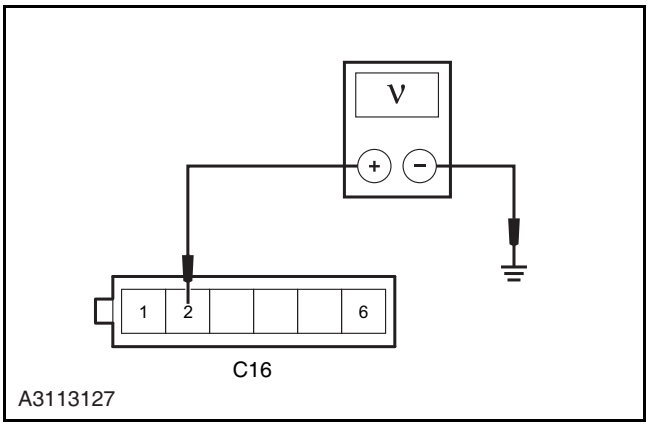	A.Turn the ignition switch to position "LOCK". B. Disconnect electronic accelerator pedal position sensor wiring harness connector C16. C. Turn the ignition switch to position "ON". D. Measure the voltage between the terminal 2 of electronic accelerator pedal position sensor wiring harness connector C16 and reliable grounding. **Standard Voltage Value: 4.5 ~ 5.5 V** E. Connect electronic accelerator pedal position sensor wiring harness connector C16. Is the voltage normal? **Y** Go to step 3. **N** Repair the fault circuit between terminal 2 of electronic accelerator pedal position sensor wiring harness connector C16 and terminal 32 of ECM E01.
3. Inspect the electronic accelerator pedal position sensor 2 ground circuit	
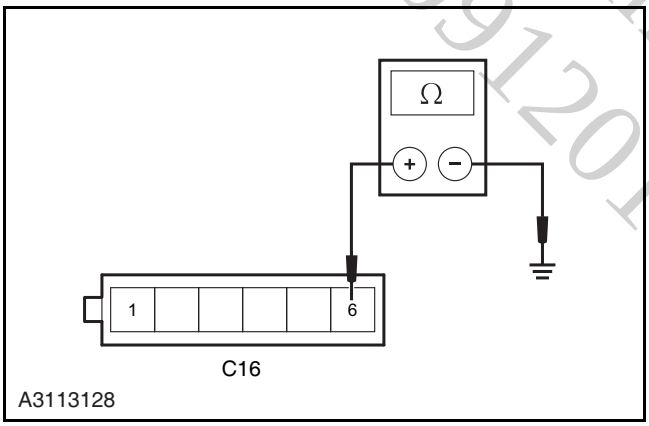	A. Turn the ignition switch to position "LOCK". B. Disconnect electronic accelerator pedal position sensor wiring harness connector C16. C. Turn the ignition switch to position "ON". D. Measure the resistance between the terminal 6 of electronic accelerator pedal position sensor wiring harness connector C16 and reliable grounding. **Standard Resistance Value: less than 5 Ω** E. Connect electronic accelerator pedal position sensor wiring harness connector C16. Is the resistance value normal? **Y** Go to step 4. **N** Repair the fault circuit between terminal 6 of electronic accelerator pedal position sensor wiring harness connector C16 and terminal 35 of the ECM E01.
4. Inspect the electronic accelerator pedal position sensor 2 signal circuit	

mashine.sbt.com 0912014 6059

Test Conditions	Details/Results/Actions
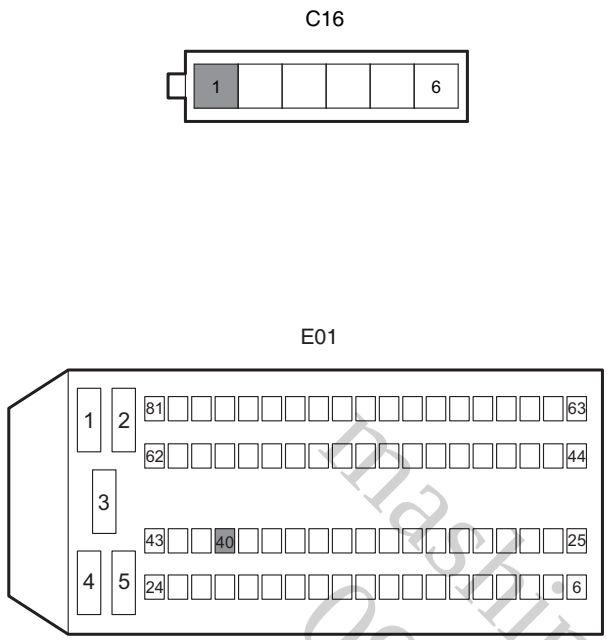 A3113129	A. Turn the ignition switch to position "LOCK". B. Disconnect the battery negative cable. C. Disconnect the electronic accelerator pedal position sensor wiring harness connector C16. D. Disconnect the engine control module wiring harness connector E01. E. Measure the resistance value between terminal 1 of electronic accelerator pedal position sensor wiring harness connector C16 and terminal 40 of ECM wiring harness connector E01, and check for open circuit. **Standard Resistance Value: less than 5 Ω** F. Measure the resistance value between the terminal 1 of electronic accelerator pedal position sensor wiring harness connector C16 and the reliable grounding. Inspect for short circuit to ground. **Standard Resistance Value: 10 MΩ or more** G. Measure the voltage between the terminal 1 of electronic accelerator pedal position sensor wiring harness connector C16 and the reliable grounding. Inspect for short circuit to power supply. **Standard Voltage Value: 0 V** H. Connect the wiring harness connectors C16 and E01. Is the circuit normal? **Y** Go to step 5. **N** Repair the fault circuit between terminal 1 of electronic accelerator pedal position sensor wiring harness connector C16 and terminal 40 of ECM wiring harness connector E01.
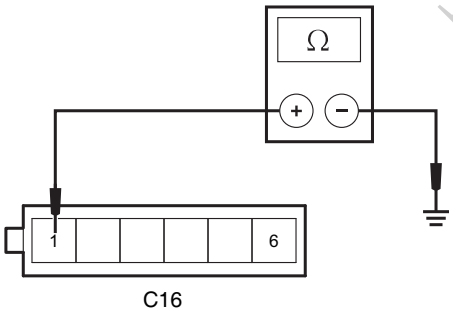 A3113130	
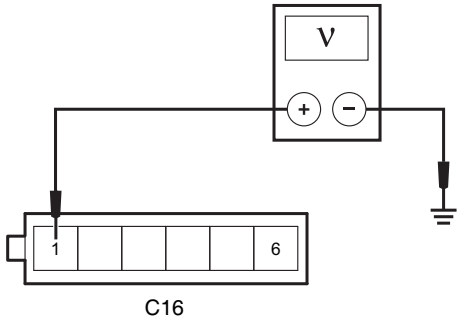 A3113131	

machinesoft.com 09120146229

Test Conditions	Details/Results/Actions
5. Inspect the electronic accelerator pedal position sensor 2 signal voltage	
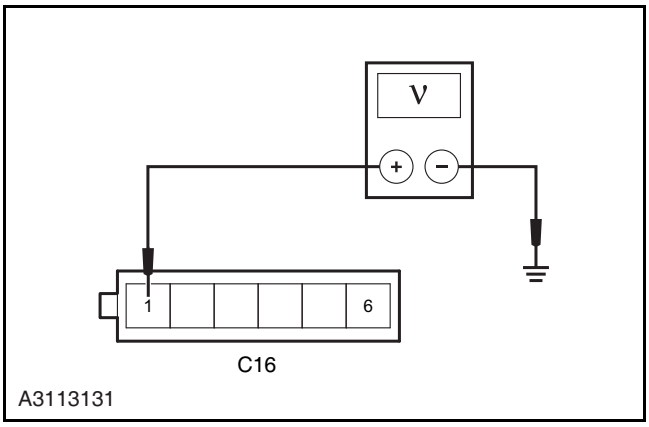	A. Turn the ignition switch to position "ON". B. Measure the voltage (continuously changing analog voltage) at terminal 1 of wiring harness connector C16 of the electronic accelerator pedal position sensor 2 from the back, or observe the data stream. **Standard Voltage:** **Do not depress the accelerator pepal 0.72 ~ 0.74 V** **Step on the accelerator pedal to the end 3.95 V** Is the voltage normal? **Y** Go to step 6. **N** Replace the electronic accelerator pedal position sensor.
6. Inspect the ECM power supply circuit	
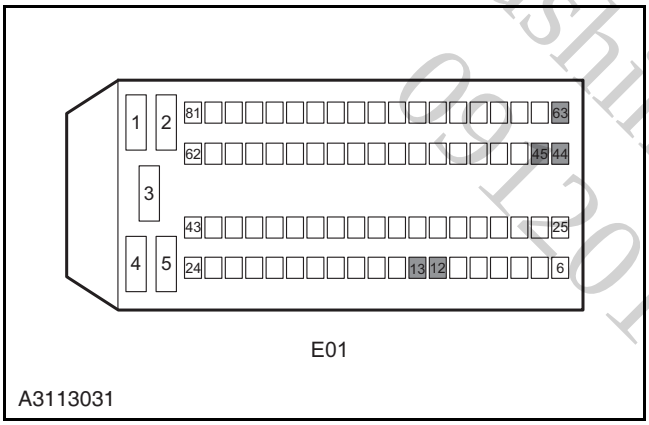	A. Turn the ignition switch to position "LOCK". B. Measure from the back of ECM wiring harness connector E01. C. Turn the ignition switch to "ON" position and use a multimeter to measure the voltage between the terminals 12, 13, 44, 45 and 63 of the ECM wiring harness connector E01 and the power supply. **Standard Voltage Value: 11 ~ 14 V** Is the voltage normal? **Y** Go to step 7. **N** Repair and inspect the ECM power supply circuit.
7. Inspect the ECM ground circuit	
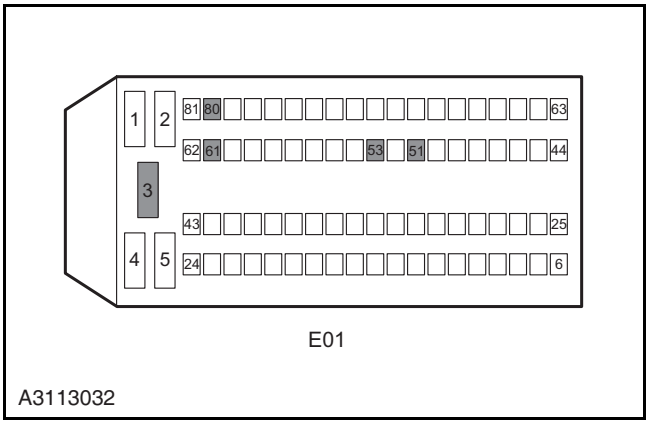	A. Turn the ignition switch to position "LOCK". B. Measure from the back of ECM wiring harness connector E01. C. Measure the resistance between the ECM wiring harness connector E01 terminal 3, 51, 53, 61 and 80 and the reliable grounding with a multimeter. **Standard Resistance Value: less than 5 Ω** Is the resistance value normal? **Y** Replace the engine control module. **Refer to: Engine Control Module (3.1.13 Electronic Control System - ME7, Removal and Installation).** **N** Inspect and repair the ECM ground circuit.

mashinesoft.com 09120146259

DTC U0001, U0101, U0140

1. DTC Description

Fault Code	Description	Definition
U0001	CAN communication - related diagnosis	ECM communicates with TCM and BCM via CAN network and the diagnostic tool may be used to access TCM, ECM and BCM through diagnostic interface DLC.
U0101	Loss of communication between ECU and TCM control module	
U0140	Lost communication with the BCM or signal abnormalities	

2. Possible Sources

Fault Code	Test Tactics	Setting Conditions (Control Strategy)	Fault
U0001	Hardware circuit inspection	Communication signal lost, signal logic error.	CAN bus fault TCM fault ECM fault BCM fault
U0101			
U0140			

3. Diagnosis Procedures

Test Conditions	Details/Results/Actions
1. General inspection	
	A. Inspect the related wiring harness connector for signs of damage, poor contact, aging or loose. Is it normal? **Y** Go to step 2. **N** Repair the fault.

mashinesoft.com 09120146259

Test Conditions	Details/Results/Actions
2. Eliminate the DTC	
	A. Connect the diagnostic tool. B. Use a diagnostic tool to delete DTC. C. Swing, pull and press the diagnosis joint DLC, engine control module (ECM) and vehicle body control module (BCM) wiring harness connector. D. Use the diagnostic tool to redo the diagnosis for DTC. Is there DTC U0001, U0101, U0140 ? **Y** Go to step 3. **N** Intermittent fault. **Refer to: Intermittent Fault Diagnosis (3.1.13 Electrical Control System - ME7, Symptom Diagnosis and Testing).**
3. Inspect and repair the CAN bus circuit	
	A. Inspect and repair the CAN bus circuit. **Refer to: CAN Bus Integrity Inspection (4.3.15 On-board Network System, Description and Operation).** Is the network normal? **Y** Go to step 4. **N** Inspect and repair the CAN network circuit of each control module, and replace the failed modules.
4. Inspect the ECM power supply circuit	
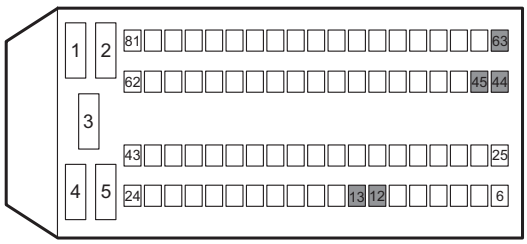 E01 A3113031	A. Turn the ignition switch to position "LOCK". B. Measure from the back of ECM wiring harness connector E01. C. Turn the ignition switch to "ON" position and use a multimeter to measure the voltage between the terminals 12, 13, 44, 45 and 63 of the ECM wiring harness connector E01 and the power supply. **Standard Voltage Value: 11 ~ 14 V** Is the voltage normal? **Y** Go to step 5. **N** Repair and inspect the ECM power supply circuit.

mashinesoft.com 09120146159

Test Conditions	Details/Results/Actions
5. Inspect the ECM ground circuit	
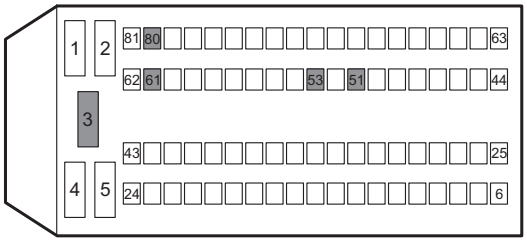 E01 A3113032	A. Turn the ignition switch to position "LOCK". B. Measure from the back of ECM wiring harness connector E01. C. Measure the resistance between the ECM wiring harness connector E01 terminal 3, 51, 53, 61 and 80 and the reliable grounding with a multimeter. **Standard Resistance Value: less than 5 Ω** Is the resistance value normal? **Y** Replace the engine control module. **Refer to: Engine Control Module (3.1.13 Electronic Control System - ME7, Removal and Installation).** **N** Inspect and repair the ECM ground circuit.

mashinesoft.com 09120146259

Removal and Installation

Engine Control Module

Removal

1. Disconnect the battery negative cable.

   Refer to: Battery Inspection (3.1.10 Charging System, General Procedures).

2. Remove the engine control module.

   1. Disconnect the engine control module wiring harness connector.

   2. Remove the 4 retaining bolts of the engine control module.

   3. Take out the engine control module.

   Torque: 10 Nm

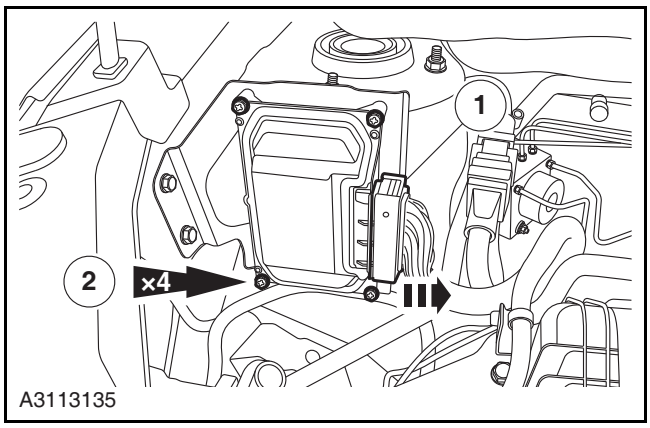

Installation

1. To install, reverse the removal procedure.

mashinesoft.com
09120146259

Crankshaft Position Sensor

Removal

1. Disconnect the battery negative cable.

   Refer to: Battery Inspection (3.1.10 Charging System, General Procedures).

2. Remove the crankshaft position sensor.

   1. Disconnect the crankshaft position sensor wiring harness connector.

   2. Remove the crankshaft position sensor retaining bolt.

   3. Detach the crankshaft position sensor.

   Torque: 10 Nm

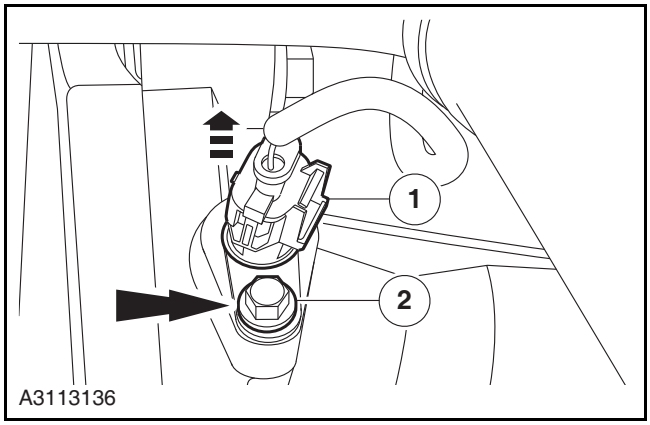

Installation

1. To install, reverse the removal procedure.

mashinesoft.com
09120146259

Electrical Throttle Body

Removal

1. Disconnect the battery negative cable.

   Refer to: Battery Inspection (3.1.10 Charging System, General Procedures).

2. Remove the air intake hose and the air filter connecting clamp.

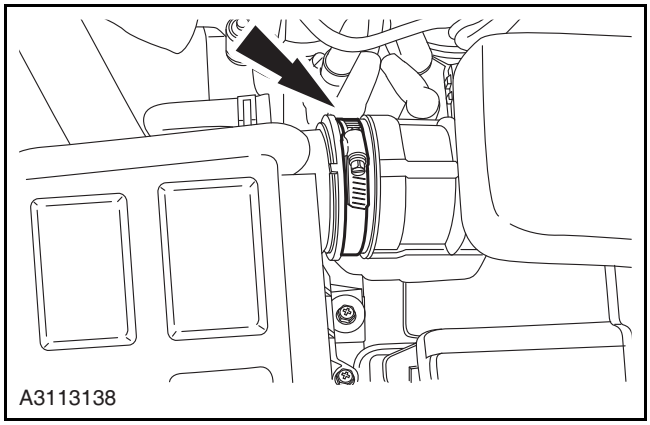

3. Remove the air intake hose and the electrical throttle body connecting clamp, and detach the air filter assembly.

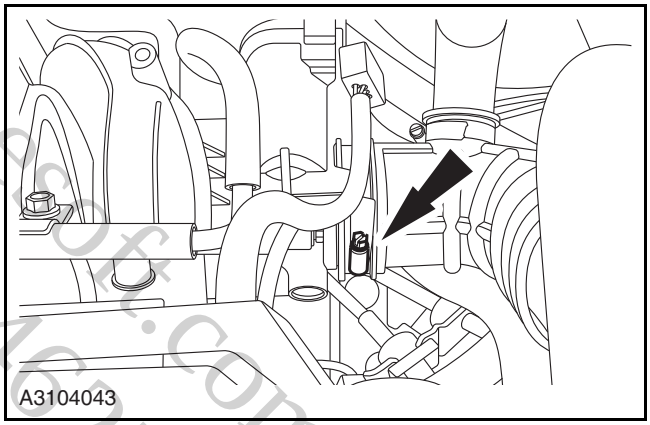

4. Remove the electrical throttle body.

   1. Disconnect the electric throttle body wiring harness connector.

   2. Remove the 4 retaining bolts on the electrical throttle body.

   3. Take out the electrical throttle body.

   Torque: 23 Nm

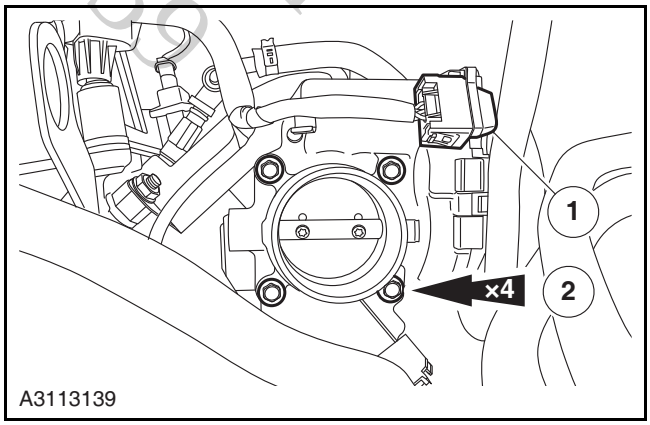

Installation

1. To install, reverse the removal procedure.

machineoff.com 09120146259

Camshaft Position Sensor

Removal

1. Disconnect the battery negative cable.

   Refer to: Battery Inspection (3.1.10 Charging System, General Procedures).

2. Disconnect the camshaft position sensor wiring harness connector.

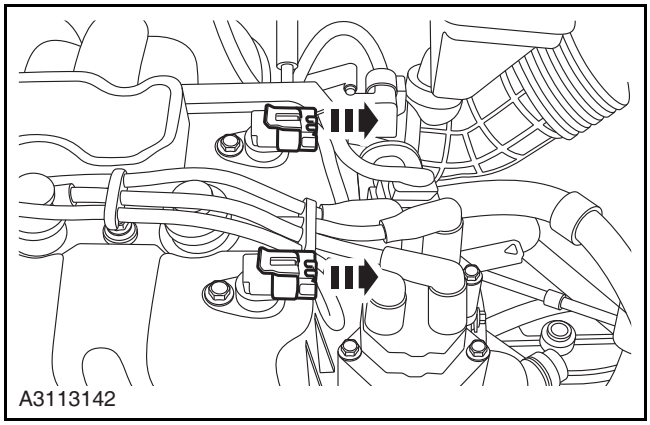

3. Remove the camshaft position sensor.

   1. Remove the camshaft position sensor retaining bolt.

   2. Take out the camshaft position sensor.

   Torque: 10 Nm

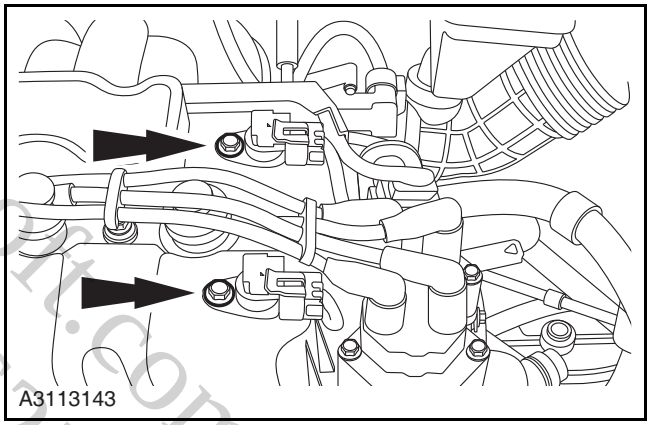

machinesoft.com 09120146259

Installation

1. To install, reverse the removal procedure.

Engine Coolant Temperature Sensor

Removal

1. Disconnect the battery negative cable.

   Refer to: Battery Inspection (3.1.10 Charging System, General Procedures).

2. Disconnect the engine coolant temperature sensor wiring harness connector.

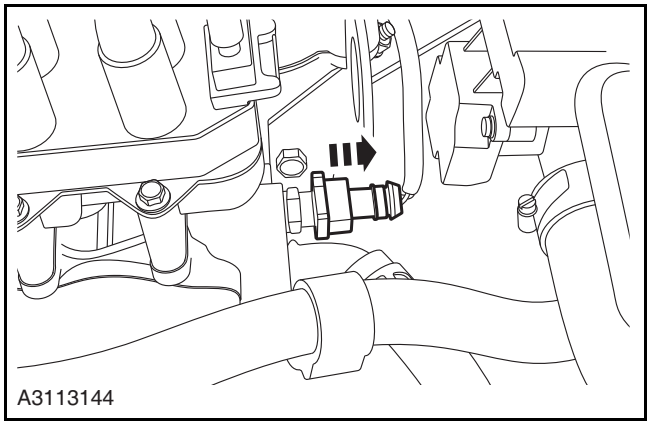

3. Remove the engine coolant temperature sensor.

   Torque: 20 Nm

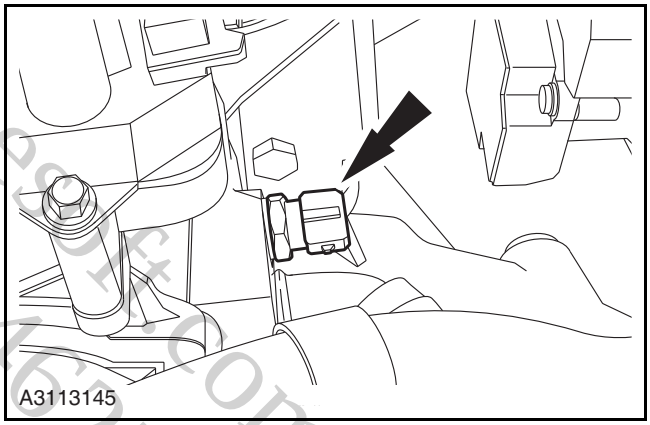

machines4.com 0912014259

Installation

1. To install, reverse the removal procedure.

Air Intake Pressure/Temperature Sensor

Removal

1. Disconnect the battery negative cable.

   Refer to: Battery Inspection (3.1.10 Charging System, General Procedures).

2. Remove the intake air pressure temperature sensor.

   1. Disconnect the air intake pressure temperature sensor wiring harness connector.

   2. Remove the retaining bolt on the air intake pressure temperature sensor.

   3. Take out the intake air pressure temperature sensor.

   Torque: 10 Nm

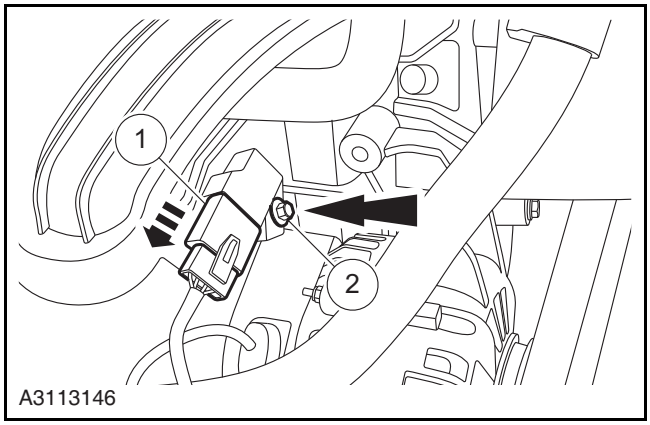

Installation

1. To install, reverse the removal procedure.

mashinesoft.com 09120146259

Fuel Injector

Removal

1. Release the fuel pressure.

   Refer to: Fuel System Pressure Test (3.1.7 Fuel System, General Procedures).

2. Disconnect the battery negative cable.

   Refer to: Battery Inspection (3.1.10 Charging System, General Procedures).

3. Disconnect the fuel inlet pipe.

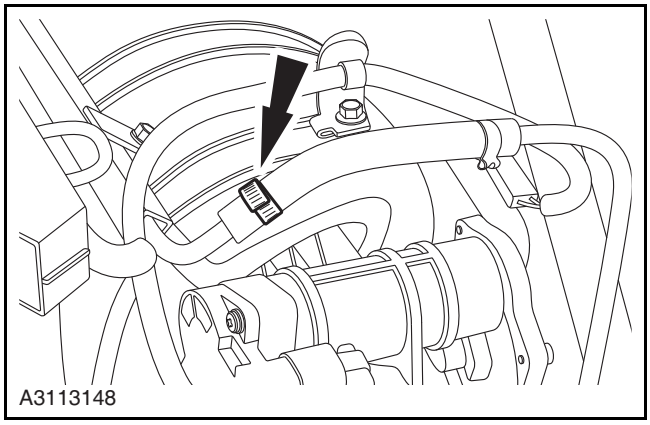

A3113148

4. Remove the fuel distribution pipe.

   1. Disconnect the injector wiring harness connectors in sequence.

   2. Remove the fuel distribution pipe assembly retaining bolt.

   Torque: 23 Nm

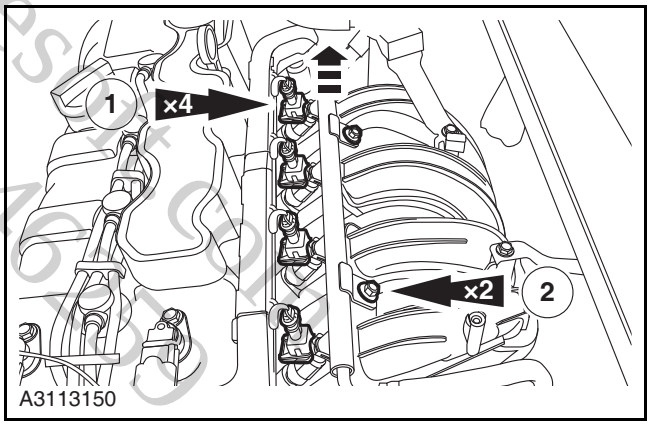

A3113150

5. Remove the injector from the fuel pipe.

   1. Remove the injector retaining clip.

   2. Pull out the injector.

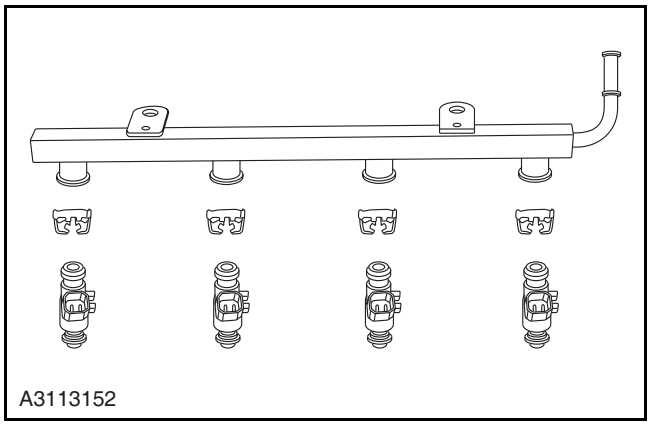

A3113152

Installation

1. To install, reverse the removal procedure.

mashinesat.com 09120146659

Pre-Catalytic Oxygen Sensor

Special Tool

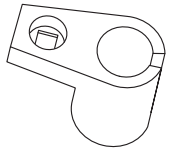 CA301-022	Oxygen Sensor Sleeve CA301-022

Removal

1. Disconnect the battery negative cable.

   Refer to: Battery Inspection (3.1.10 Charging System, General Procedures).

2. Disconnect the pre-catalytic oxygen sensor wiring harness connector.

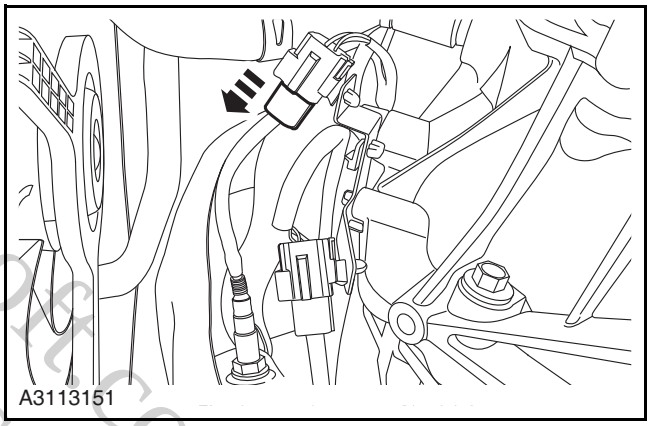

3. Remove the pre-catalytic oxygen sensor with the oxygen sensor sleeve.

   Torque: 50 Nm

   Special Tool: CA301-022

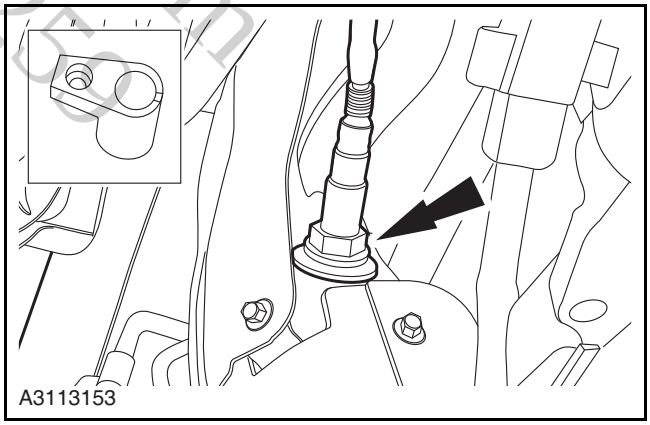

Installation

1. To install, reverse the removal procedure.

mashinesoft.com 09120146258

Post-Catalytic Oxygen Sensor

Special Tool

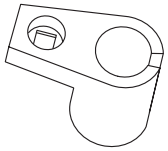 CA301-022	Oxygen Sensor Sleeve CA301-022

Removal

1. Disconnect the battery negative cable.

   Refer to: Battery Inspection (3.1.10 Charging System, General Procedures).

2. Disconnect the post-catalytic oxygen sensor wiring harness connector.

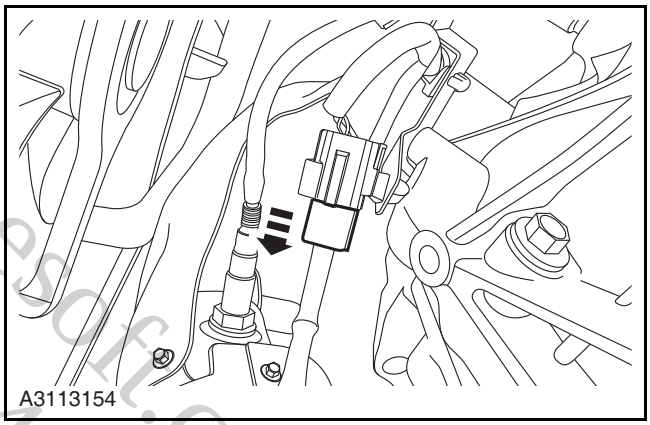
A3113154

3. Remove the post-catalytic oxygen sensor with the oxygen sensor sleeve.

   Torque: 50 Nm

   Special Tool: CA301-022

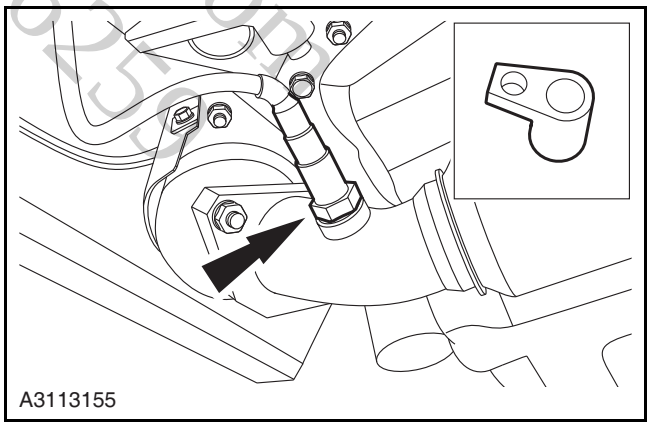
A3113155

Installation

1. To install, reverse the removal procedure.

machinesoft.com 09120146258

Knock Sensor

Removal

1. Disconnect the battery negative cable.

   Refer to: Battery Inspection (3.1.10 Charging System, General Procedures).

2. Remove the intake manifold reinforcement plate retaining bolt.

   Torque: 23 Nm

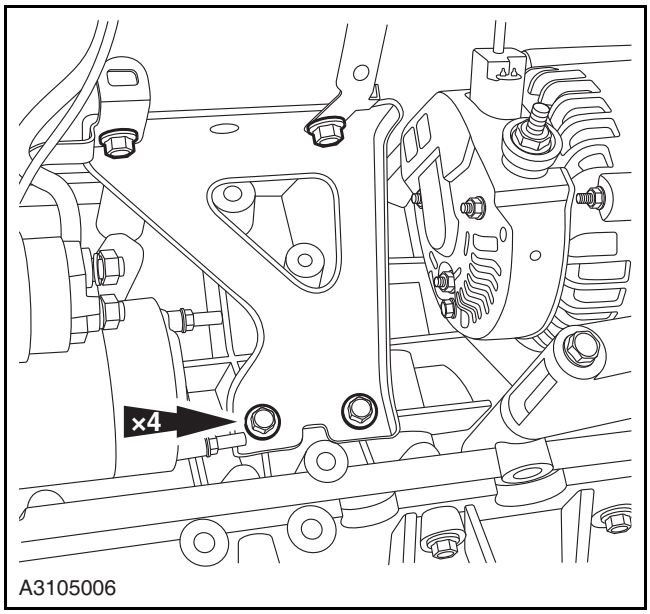

3. Replace the knock sensor.

   1. Disconnect the knock sensor wiring harness connector.

   2. Remove the knock sensor retaining bolt.

   Torque: 20 Nm

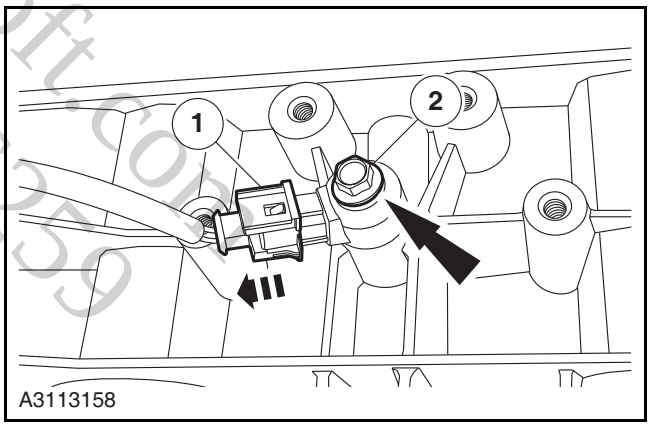

Installation

1. To install, reverse the removal procedure.

mashinesoft.com 09120146259

Accelerator Pedal Position Sensor

Removal

1. Disconnect the battery negative cable.

   Refer to: Battery Inspection (3.1.10 Charging System, General Procedures).

2. Disconnect the accelerator pedal position sensor assembly wiring harness connector.

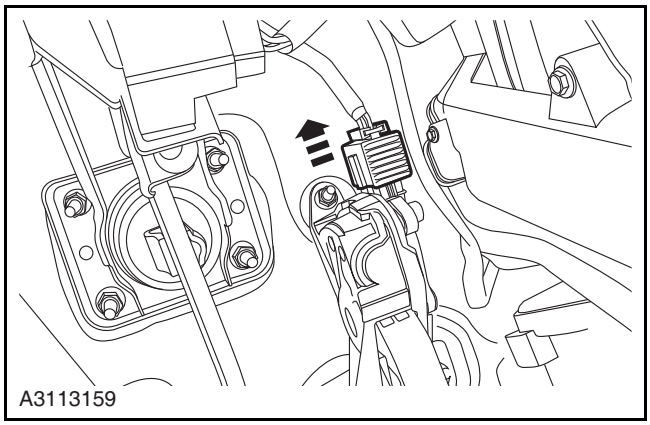
A3113159

3. Remove the accelerator pedal position sensor assembly retaining bolt, and take out the accelerator pedal position sensor assembly.

   Torque: 23 Nm

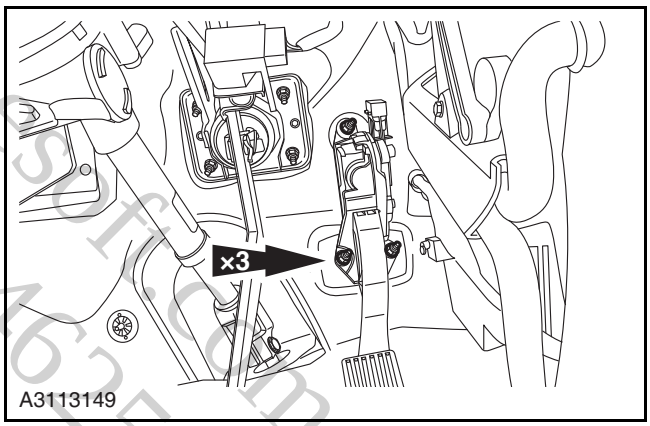

A3113149

mashinesoft.com 09120146259

Installation

1. To install, reverse the removal procedure.

Oil Control Valve

Removal

1. Disconnect the battery negative cable.

   Refer to: Battery Inspection (3.1.10 Charging System, General Procedures).

2. Remove the oil control valve.

   1. Disconnect the oil control valve wiring harness connector.

   2. Remove the oil control valve retaining screw.

   Torque: 10 Nm

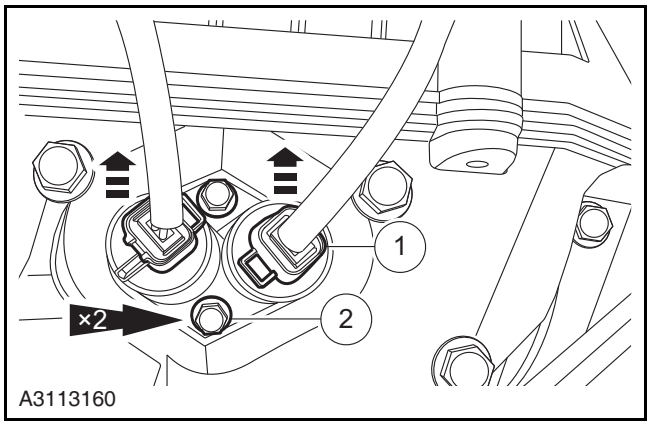

3. Take out the oil control valve assembly.

CAUTION: Push the control valve into the cylinder cover installing hole until the control valve installing boss touches the cylinder cover when installing the oil control valve. Do not push the control valve into the holes forcibly by installing bolt. Make sure the clip of the control valve harness wiring connector faces the middle position.

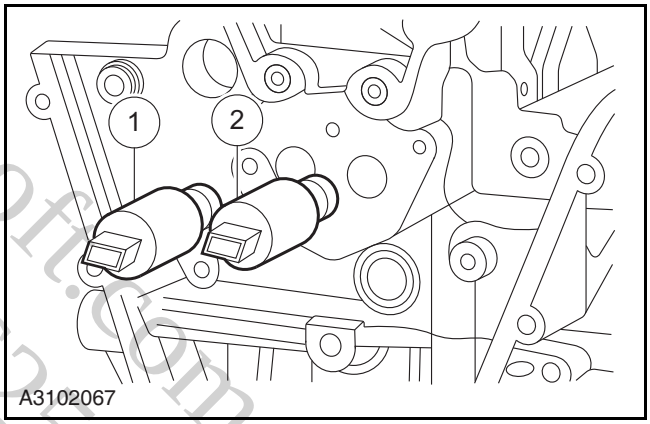

machinesoft.com 00100146259

Installation

1. To install, reverse the removal procedure.

mashinesoft.com
09120146259

mashinesoft.com
09120146259

mashinesoft.com
09120146259