MEGANE

DRIVER'S HANDBOOK

RENAULT

RENAULT elf

RENAULT recommends ELF

Important: to optimize engine operation the use of a lubricant may be restricted to certain vehicles. Please refer to the maintenance documentation.

ELF is developing a complete range of lubricants for RENAULT: engine oils, manual and automatic transmission oils.

These are very high-technology lubricants stimulated by applied research in Formula One.

This range is updated with RENAULT's engineering teams to perfectly meet the specific needs of RENAULT vehicles.

► ELF lubricants are a major factor in your vehicle's performance.

RENAULT recommends the approved ELF lubricants for your oil changes and top-ups.

Contact your RENAULT representative or visit the site: www.lubricants.elf.com

elf

The oil born in Formula One

Welcome to your new vehicle

This Driver's Handbook contains the information necessary:

– for you to familiarise yourself with your vehicle, to use it to its best advantage and to benefit fully from the all the functions and the technical developments it incorporates.

– to ensure that it always gives the best performance by following the simple, but comprehensive advice concerning regular maintenance.

– to enable you to deal quickly with minor faults not requiring specialist attention.

It is well worth taking a few minutes to read this handbook to familiarise yourself with the information and guidelines it contains about the vehicle and its functions and new features. If certain points are still unclear, our Network technicians will be only too pleased to provide you with any additional information.

The following symbol will help you when reading this handbook:

To indicate a hazard, danger or safety recommendation.

The descriptions of the models given in this handbook are based on the technical specifications at the time of writing. **This handbook covers all items of equipment** (both standard and optional) **available for these models but whether or not these are fitted to the vehicle depends on the version, options selected and the country where the vehicle is sold.**

This handbook may also contain information about items of equipment to be introduced later in the model year.

Throughout the manual, the "approved Dealer" is your RENAULT Dealer.

Enjoy driving your new vehicle.

Translated from French. Copying or translation, in part or in full, is forbidden unless prior written permission has been obtained from RENAULT, 92 100 Billancourt 2010.

0.2

C O N T E N T S

Sections

Getting to know your vehicle 1

Driving 2

Your comfort 3

Maintenance 4

Practical advice 5

Technical specifications 6

Alphabetical index 7

0.4

Section 1: Getting to know your vehicle

RENAULT cards: general information, use, deadlocking 1.2
Doors 1.10
Automatic locking when driving 1.14
Headrests/Seats 1.15
Seat belts. 1.22
Additional methods of restraint: 1.25
to the front seat belts 1.25
to the rear seat belts 1.29
side protection 1.30
Child safety: general information 1.32
choosing a child seat mounting 1.35
fitting the child seat 1.37
deactivating/activating the front passenger air bag 1.43
Driver’s position 1.46
Control instruments 1.50
trip computer and warning system 1.56
vehicle settings customisation menu 1.66
Steering wheel. 1.67
Power-assisted steering 1.67
Clock and exterior temperature 1.68
Rear view mirrors 1.69
Audible and visual signals 1.70
Exterior lighting and signals. 1.71
Headlight beam adjustment. 1.74
Wash/Wipe 1.75
Fuel tank (filling with fuel) 1.78

RENAULT CARDS: general information (1/2)

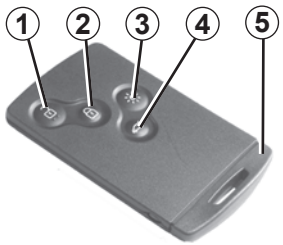

1 Unlocking the doors and tailgate.
2 Locking all doors and tailgate.
3 Switching on the lighting remotely.
4 Unlocking/locking the tailgate
5 Integrated key.

Special note
The RENAULT “SERVICE” card, on equipped vehicles, can be identified by the word “SERVICE” engraved on the card. Refer to the information on the RENAULT “SERVICE” card in section 1.

The RENAULT card is used for:

– locking/unlocking the doors and tailgate (doors, tailgate) and the fuel filler flap (see the following pages);
– switching on the vehicle lighting remotely (refer to the following pages);
– depending on the vehicle, automatically closing the electric windows and sunroof remotely (see the information on “Electric windows/Electric sunroof” in Section 3);
– starting the engine; refer to the information on “Starting the engine” in Section 2.

Battery life

Make sure that the correct battery type is being used, and that the battery is in good condition and inserted correctly. Its service life is approximately two years: replace it when the message “Keycard battery low” appears on the instrument panel (refer to the information on the “RENAULT card: battery" in section 5).

Range of the RENAULT card

This varies according to the surroundings. It is important to make sure when handling the RENAULT card that you do not lock or unlock the doors by inadvertently pressing the buttons.

When the battery is flat, you can still lock/unlock and start your vehicle. Refer to the information on “Locking/unlocking the doors” in Section 1 and “Starting the engine” in Section 2.

Driver’s responsibility
Never leave your vehicle with the RENAULT card inside and never leave a child (or a pet) unsupervised, even for a short while.
They may pose a risk to themselves or to others by starting the engine, activating equipment such as the electric windows or by locking the doors.
Risk of serious injury.

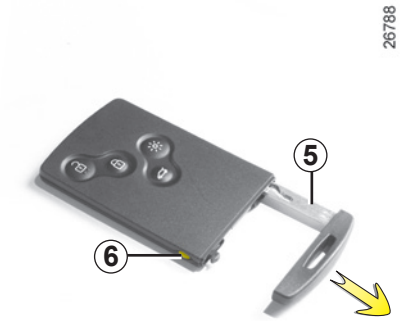

Integrated key *5*

The integrated key is used to lock or unlock the front left-hand door if the RENAULT card does not work:

– when the RENAULT card battery is drained, flat battery, etc.

– use of devices using the same frequency as the card;

– if the vehicle is located in a zone of high electromagnetic radiation;

Access to key 5

Press button ***6*** and pull on key ***5*** then release the button.

Using the key

Refer to the information on “Locking/ unlocking the doors”.

Once you have accessed the vehicle using the integrated key, replace it in its housing in the RENAULT card, then insert the RENAULT card into the card reader to start the vehicle.

Advice

Avoid leaving the card in hot, cold or humid areas.

Do not keep the RENAULT card in a place where it could be bent or damaged accidentally, such as in a back pocket of a garment.

Replacement: need for an additional RENAULT Card

If you lose your RENAULT card or require another, you can obtain one from an approved dealer.

If a RENAULT card is replaced, it will be necessary to take the vehicle and **all of its RENAULT cards** to an approved dealer to initialise the system.

You may use up to four RENAULT cards per vehicle.

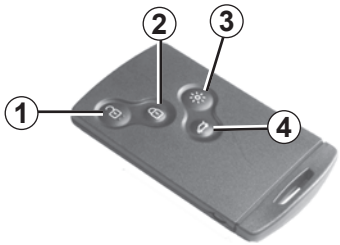

Unlocking the doors and tailgate

Press button ***1***.
The hazard warning lights **flash once** to indicate that the doors have been unlocked.

When unlocking is only active for the driver's door, (refer to the information on the "vehicle settings customisation menu" in Section 1):
– pressing button ***1*** unlocks only the driver's door and the fuel filler flap;
– pressing button ***1*** twice unlocks all the doors and the tailgate.

Locking the doors and luggage compartment

Press the locking button ***2***. The hazard warning lights **flash twice** to indicate that the doors have locked. If a door or the luggage compartment is open or not properly shut, or if a RENAULT card is still in the reader, the doors and luggage compartment lock then quickly unlock and the hazard warning lights **do not flash**.

Unlocking/locking the luggage compartment only

Press button ***4*** to unlock/lock the luggage compartment.

Distance lighting function

The dipped beam headlights, indicator lights and interior lights come on for approximately 30 seconds when button ***3*** is pressed. This can be used, for example, to identify the vehicle from a distance when parked in a car park.
Note: pressing button ***3*** again switches off the lighting.

RENAULT card not detected alarm

If a door is opened when the engine is running and the card is not in the reader, the message "Keycard not detected" and a beep will warn you of this. The warning disappears when the card is inserted in the reader again.

The card buttons are deactivated when the engine is running.

The flashing status of the hazard warning lights informs you of the vehicle status:
– **one flash** indicates that the vehicle is completely unlocked;
– **two flashes** indicate that the vehicle is completely locked.

28517

Use

On equipped vehicles, in addition to the functions of the remote control RENAULT card, it can be used to lock/unlock without using the RENAULT card, when it is in access zone ***1***.

Note: ensure that the RENAULT card is not in contact with other electronic equipment (computer, PDA, phone, etc.) as this could hinder its operation.

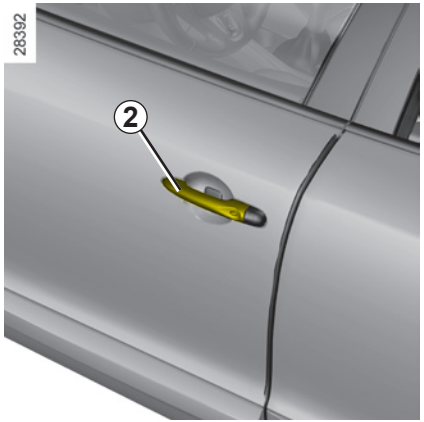

28392

Unlocking the vehicle

With the RENAULT card in zone ***1***, place your hand on a door handle ***2***: the vehicle will unlock (in some cases, you may need to pull door handle ***2*** twice to unlock the vehicle and open the door).

Pressing the button ***3*** also unlocks all the doors and the tailgate.

The hazard warning lights **flash once** to indicate that the doors have been unlocked.

28481

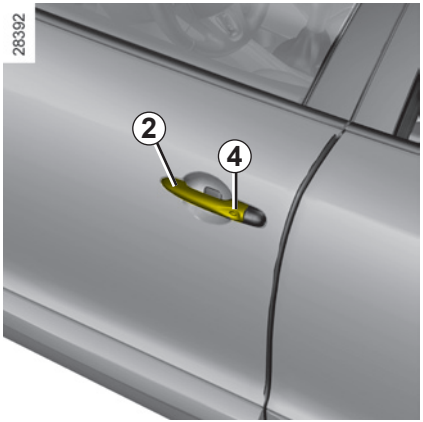

Locking the vehicle

There are three ways to lock the vehicle: remotely, using button ***4***, or using the RENAULT card.

Remote locking
With the RENAULT card on you, and doors and tailgate closed, move away from the vehicle: it will lock automatically once you have left zone ***1***.

Note: the distance at which the vehicle locks depends on the surroundings.

The hazard warning lights **flash twice** and a beep sounds to indicate that the doors have locked.

The beep may be switched off. Consult an approved Dealer.

If a door or the tailgate is open or not properly shut, or a card is in the passenger compartment (or the card reader) the vehicle will not lock. In this situation, **no beep sounds and the hazard warning lights do not flash.**

Locking using button *4*

With the doors and luggage compartment closed, press button ***4*** on the driver's door handle. The vehicle will lock. If a door or the tailgate is open or not closed properly, the vehicle will quickly lock/unlock.

Note: a RENAULT card must be within the vehicle's access zone (zone ***1***) to be able to lock the vehicle using the button.

Special note:

If you wish to check that the doors are locked after locking using button ***4***, you have approximately **three** seconds to try the door handles without unlocking them.

After this delay, the hands-free mode is activated once again and any movement of a handle will unlock the vehicle.

26787

Locking the vehicle (continued)

Locking using the RENAULT card

With the doors and luggage compartment closed, press button ***5***: the vehicle will lock.

The hazard warning lights **flash twice** to indicate that the doors have locked.

Note: the maximum distance at which the vehicle locks depends on the surroundings.

28518

Special note:

The vehicle will not lock if:

– a door or the tailgate is open or not properly closed;

– a card is still in zone ***6*** (or in the card reader) and no other card is in the external detection zone.

With the engine running, if after having opened and closed a door the card is no longer in the passenger compartment, the message Keycard not detected (accompanied by a beep when the speed exceeds a certain level) warns you that the card is no longer in the vehicle. This avoids you driving away after having dropped off a passenger who has the card, for example.

The warning disappears when the card is detected again.

After locking/unlocking the vehicle or the luggage compartment only using the buttons on the RENAULT card, remote locking and unlocking in hands-free mode are deactivated.

To reactivate the “hands-free” mode: restart the vehicle.

26787

If the vehicle is equipped with a deadlocking function, this allows you to lock the opening elements and to prevent the doors from being unlocked using the interior handles (for example, by breaking the window and then trying to open the door from the inside).

Never use deadlocking if someone is still inside the vehicle.

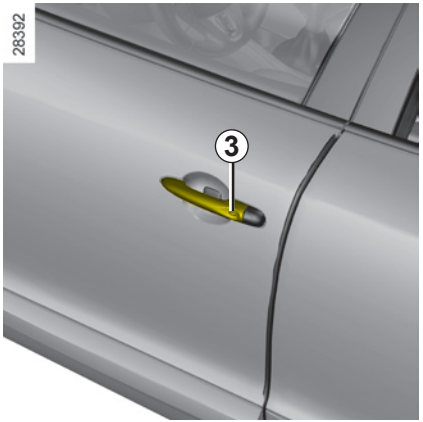

28392

To activate deadlocking

You can choose between two deadlocking activation modes:

– press button ***2*** twice in quick succession;

– or, press the button on the driver's door handle ***3*** twice in quick succession.

The hazard warning lights flash **five** times to indicate locking.

To deactivate deadlocking

Unlock the vehicle using button ***1*** on the RENAULT card.

The hazard warning lights flash once to indicate that the doors have been unlocked.

Activating deadlocking also remotely closes the windows and/or the electric sunroof, on equipped vehicles.

After activating the deadlocking function using button ***2***, remote locking and unlocking in hands-free mode are deactivated.

To reactivate the "hands-free" mode: restart the vehicle.

RENAULT CARD “SERVICE”

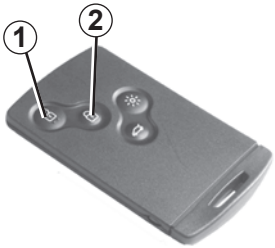

If the vehicle is equipped with this card, it can be identified by the word “SERVICE” engraved on the card.

In certain situations, you may wish to entrust your vehicle to a third party (parking valet, mechanic, etc.) whilst restricting its operation.

The RENAULT “SERVICE” card enables the vehicle to be locked but only allows the driver's door to be unlocked and the engine to be started.

Activation of the “SERVICE” mode.

Insert the RENAULT “SERVICE” card into the card reader ***4***. All the vehicle opening elements lock (except the driver’s door).

If they do not, **with the engine switched off,** press button ***1*** (all the doors and the tailgate lock, with the exception of the driver’s door) or ***2*** (the entire vehicle locks) on the RENAULT “SERVICE” card.

Deactivation of the “SERVICE” mode

There are two possibilities:

– Press a button on the RENAULT card (not the RENAULT “SERVICE” card);

– start the engine with a RENAULT card (not the RENAULT “SERVICE” card). With the card in reader ***4***, press button ***5***.

The interior locking/unlocking switch ***3*** is deactivated while the vehicle is in use with the RENAULT “SERVICE” card.

Each vehicle only has one RENAULT “SERVICE” card.

When using a RENAULT “SERVICE” card, the other cards retain all their functions.

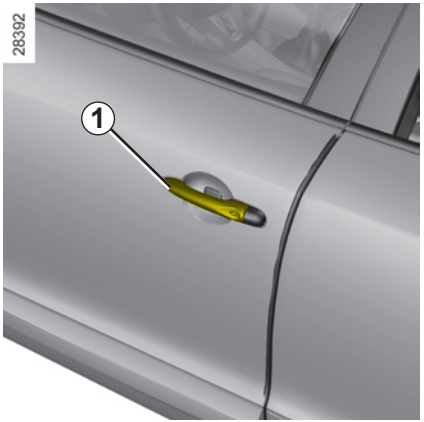

Opening the doors from the outside

With the doors unlocked or the “hands-free” RENAULT card in your possession, hold handle ***1*** and pull it towards you.

In some cases, it may be necessary to pull the handle twice to open the door.

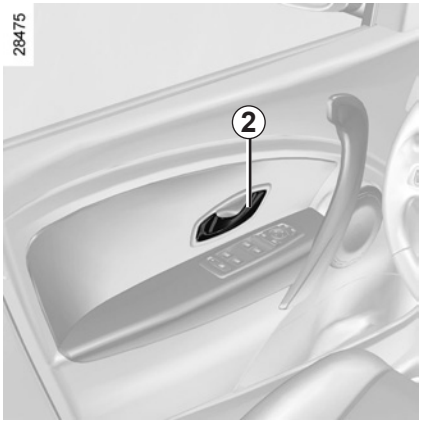

Opening from the inside

Pull on the handle ***2***.

Lights-on reminder buzzer

If you have switched off the ignition and left the lights switched on, a reminder buzzer will sound when a door is opened.

Card reminder buzzer

When the driver’s door is opened and the card is still in the reader, the message “Please remove keycard” appears on the instrument panel, accompanied by a beep.

Door/tailgate open buzzer

If a door or the luggage compartment is open or not properly closed, once the vehicle reaches 6 mph (10 km/h), the message “Boot open” or “Door open” (depending on the door) appears on the instrument panel, accompanied by a warning light.

Special note

After switching off the engine, the lights and any accessories that are in operation (radio, etc.) will continue to operate.

They stop as soon as the driver’s door is opened.

As a safety precaution, the doors should only be opened or closed when the vehicle is stationary.

Child safety

Vehicle with switch *1*
Press switch ***1*** to authorise opening of the rear doors. If the vehicle is equipped with electric rear windows, this action will also authorise their use.
The indicator light in the switch lights up to confirm that the locks have been activated.

Note: if there is a system fault, the message “Check child safety device” is displayed on the instrument panel: contact an approved Dealer.

Safety of rear occupants
The driver can authorise operation of the rear doors and, depending on the vehicle, the electric windows by pressing switch ***1*** on the side with the illustration.

Depending on the vehicle, in the event of a fault:
– a beep sounds;
– a message is displayed on the instrument panel;
– the integrated indicator does not light up.

If the battery has been disconnected, press switch ***1*** on the side with the symbol, to lock the rear doors.

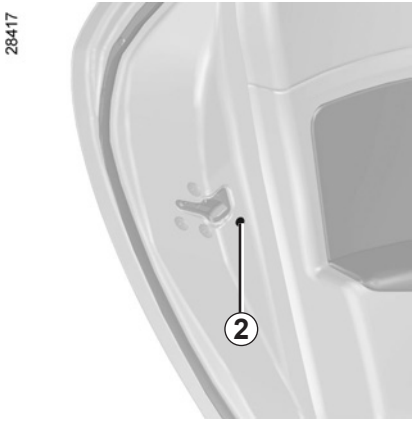

Vehicle with manual door locking
Move lever ***2*** and check from the inside that the doors are securely locked, to prevent the rear doors being opened from the inside.

Driver’s responsibility when parking or stopping the vehicle
Never leave an animal, child or adult who is not self-sufficient alone on your vehicle, even for a short time.
They may pose a risk to themselves or to others by starting the engine, activating equipment such as the electric windows or by locking the doors.
Also, in hot and/or sunny weather, please remember that the temperature inside the passenger compartment increases very quickly.

RISK OF DEATH OR SERIOUS INJURY.

Locking/Unlocking the doors from the outside

This is done using the RENAULT Card; see the “RENAULT Card” information in Section 1.

In certain cases, the RENAULT card may not work:

– if the RENAULT card battery is weak, flat, etc.

– if equipment operating on the same frequency as the card (mobile phones, etc.) is used;

– vehicle located in a high electromagnetic radiation zone.

It is then possible:

– to use the key integrated into the card to unlock the front left-hand door;

– to lock each of the doors manually;

– to use the interior door locking/unlocking control (refer to the following pages).

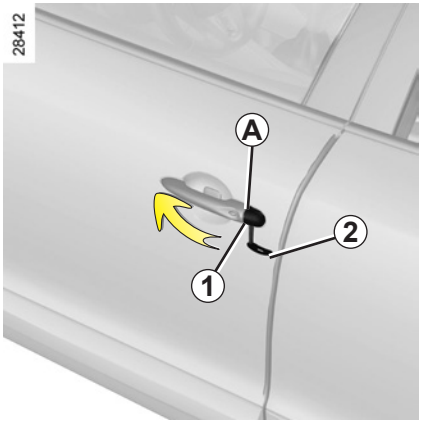

Using the key integrated in the RENAULT card

– Remove cover ***A*** from the left-hand door (using the end of key ***2***) in notch ***1***;

– move it upwards to remove cover ***A***;

– insert the key ***2*** into the lock of the front left-hand door and lock or unlock.

Locking the doors manually

Turn screw ***3*** with the door open (using the end of the key) and close the door.

This means that the doors are then locked from the outside.

The doors may then only be opened from the inside or by using the key in the front left-hand door.

Interior locking/unlocking door control

Switch ***4*** controls the doors, tailgate and, depending on the vehicle, the fuel filler flap simultaneously.

If a door or the tailgate is open or not closed properly, the doors and tailgate lock/unlock quickly.

If transporting an object with the tailgate open, you can still lock the doors: **with the engine stopped,** press and hold switch ***4*** for more than five seconds to lock the other doors.

Locking the doors without the RENAULT card

For example, in the event of a discharged battery or the RENAULT card temporarily not working, etc.

With the engine switched off and a door or tailgate open, press and hold switch ***4*** for more than five seconds.

When the door is closed, all the doors and the tailgate will be locked.

Unlocking the vehicle from the outside is only possible with the RENAULT card in the vehicle's access zone or using the key integrated in the RENAULT card.

After locking/unlocking the vehicle or the tailgate only using the buttons on the RENAULT card, remote locking and unlocking in hands-free mode are deactivated.

To reactivate the “hands-free” mode: restart the vehicle.

Door and tailgate status indicator

When the ignition is on, the indicator light integrated in switch ***4*** informs you of the status of the doors and tailgate:

– indicator light on, the doors and tailgate are locked,

– indicator light off, the doors and tailgate are unlocked.

When you lock the doors, the indicator light remains lit and then goes out.

Never leave your vehicle with the RENAULT card inside.

If you decide to keep the doors locked when you are driving, remember that it may be more difficult for the emergency services to gain access to the passenger compartment in the event of an emergency.

AUTOMATIC LOCKING WHEN DRIVING

You can decide whether you want to activate this function.

Operating principle

After the vehicle is started, the system automatically locks the doors when you are driving at approximately 6 mph (10 km/h) and over.

The door can be unlocked:

– by pressing the door unlocking button ***1***.

– by opening a front door (vehicle stationary).

Note: if a door is opened or closed, it will automatically lock again when the vehicle reaches a speed of 6 mph (10 km/h).

Driver's responsibility

If you decide to keep the doors locked when you are driving, remember that it may be more difficult for those assisting you to gain access to the passenger compartment in the event of an emergency.

Activating/deactivating the function

Refer to the information on the "Vehicle settings customisation menu" in Section 1, regarding the "Auto door locking while driving" function:

☑ function activated

☐ function deactivated.

Operating faults

If you experience an operating fault (no automatic locking, the indicator light incorporated in button ***1*** does not light up when trying to lock the doors and tailgate, etc.), firstly check that the doors and tailgate are properly closed. If they are closed correctly, contact an approved dealer.

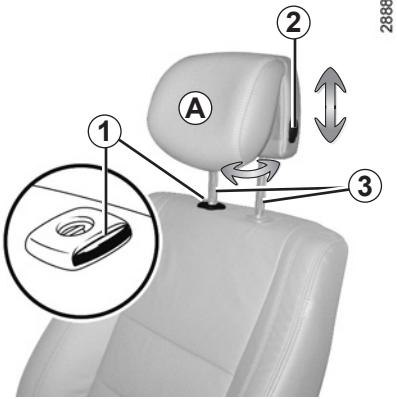

To raise the headrest

Pull the headrest upwards to the desired height.

To lower the headrest

Press button ***2*** and guide the headrest down to the desired height.

To adjust the angle of the headrest

Depending on the vehicle, tilt section ***A*** towards or away from you to the required position.

To remove the headrest

Raise the headrest to its highest position (tilt the seatback backwards if necessary). Press button ***1*** and lift the headrest to release it.

To refit the headrest

Pull out the headrest rods ***3*** as far as possible by pulling from the top. Take care to ensure they are clean and correctly aligned and, if there are any problems, check that the notches are facing forwards.
Insert the headrest rods into the holes (tilt the seatback backwards if necessary).
Lower the headrest until it locks, press button ***1*** and lower the headrest as far as possible.
Check that each headrest rod ***3*** is securely locked in the seatback by trying to pull them up or push them down.

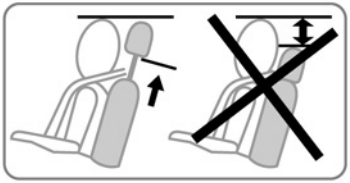

The three upper positions can be manipulated without pressing button ***2***. However, it is preferable to press this button to lower the headrest.

The headrest is an important safety component: ensure that it is in place and in the correct position. The distance between your head and the headrest and the distance between the head and section ***A*** should be as small as possible.

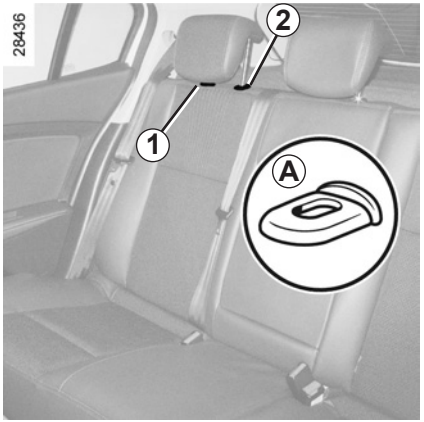

Position for use

Raise or lower the headrest while pulling it towards the front of the vehicle.

To remove the headrest

Press tabs ***A*** of rods ***1*** and ***2*** simultaneously and remove the headrest.

Note: on the three door version, first lower the bench seatback (refer to the information on the “Rear seat functions” in Section 3).

To refit the headrest

Insert the headrest rods into the sleeves, and lower the headrest to the first notch.

Storage position

Lower the headrest as far as possible, then press tab ***2*** and lower it completely.

When the headrest is set at the lowest position (position *B*) this is for storage only: it should not be in this position when a seat is occupied.

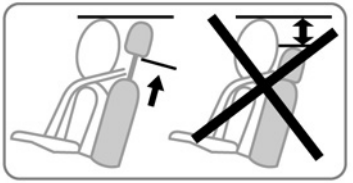

The headrest is a safety component. Ensure that it is fitted and in the correct position: the top of your head should be in line with the top of the headrest.

FRONT SEATS WITH MANUAL CONTROL (1/2)

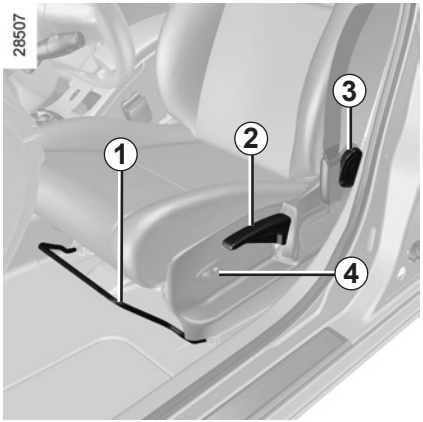

To move the seat forwards or back

Lift handle ***1*** to release. Release the handle once the seat is in the correct position and ensure that the seat is fully locked into position.

To raise or lower the seat base

Move lever ***2*** as many times as necessary upwards or downwards.

To tilt the seatback

Turn control knob ***3*** to the required position.

Heated seats

(depending on vehicle)

With the engine running, turn control ***4*** to either position **1**, **2** or **3** (depending on the temperature required). An indicator light on the instrument panel lights up once the front seat heating system is operating.

The system, which has a thermostat, decides whether or not the heating is needed, according to the position selected.

For safety reasons, carry out any adjustments when the vehicle is not being driven.

We would advise you not to recline the seatbacks too far to ensure that the effectiveness of the seat belts is not reduced.

Nothing should be placed on the floor (area in front of driver) as such objects may slide under the pedal during braking manoeuvres, thus obstructing its use.

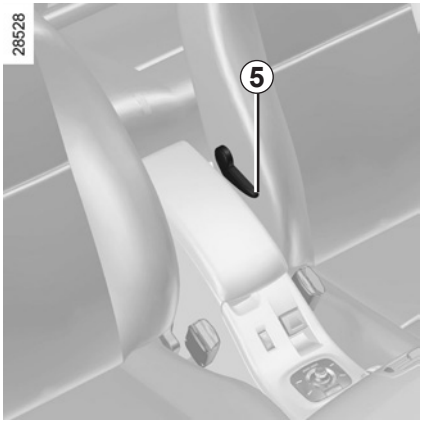

To adjust the lumbar support on the driver's seat:

Lower handle ***5*** to increase the support and lift to decrease it.

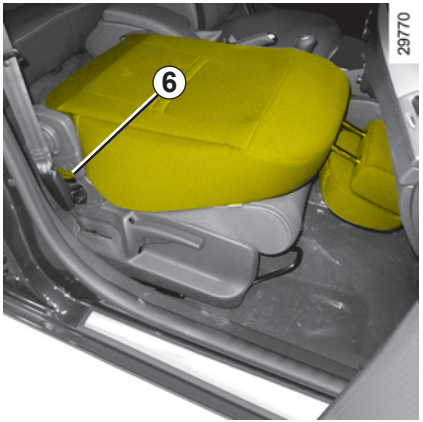

Table function

Depending on the vehicle, the passenger seatback may be folded down onto the seat base to create a table.

Lower the headrest, move the seat back, tilt handle ***6*** and completely lower the seatback.

For your safety, attach any transported objects when the seat is in the table position.

When the front seat is in table position, the front passenger air bag must be disabled (see information on "Child safety: activating/deactivating the front passenger air bag" in Section 1).

Risk of serious injury caused by items resting on the seatback table which may be dislodged when the air bag is deployed.

The label (on the dashboard) and the markings (on the windscreen) remind you of these instructions.

FRONT SEATS WITH ELECTRIC CONTROL

Switch ***3*** is used for adjusting the seatback and switch ***4*** is used for adjusting the seat squab.
On equipped vehicles, buttons ***1*** are used to store the chosen driving position (refer to the following page).

Adjusting the seat squab:

– **To move the seat forwards or back**
Move switch ***4*** forwards or backwards.
– **To raise or lower the seat base**
Move the switch ***4*** upwards or downwards.

Adjusting the lumbar support on the driver's seat:

Lower handle ***5*** to increase the support and lift to decrease it.

For safety reasons, carry out any adjustments when the vehicle is not being driven.

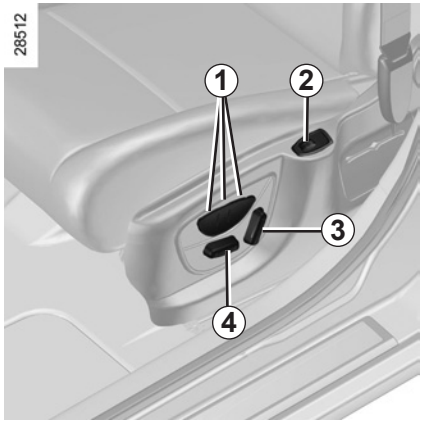

Adjusting the seatback:

To tilt the seatback, move the top of switch ***3*** forwards or backwards.

Heated seats

(depending on vehicle)
With the engine running, turn control ***2*** to either position **1**, **2** or **3** (depending on the temperature required). An indicator light on the instrument panel lights up once the front seat heating system is operating.
The system, which has a thermostat, decides whether or not the heating is needed, according to the position selected.

We would advise you not to recline the seatbacks too far to ensure that the effectiveness of the seat belts is not reduced.

Nothing should be placed on the floor (area in front of driver) as such objects may slide under the pedal during braking manoeuvres, thus obstructing its use.

FRONT SEATS WITH ELECTRIC CONTROL WITH STORAGE OF SETTINGS

It is possible to store **three** driving positions.

A driving position includes the settings for the seat base and seatback of the driver's seat.

The system operates:

– with the "hands-free" card detected or, depending on the vehicle, RENAULT card in the card reader;

– when the driver's door is opened.

For safety reasons, carry out any adjustments when the vehicle is not being driven.

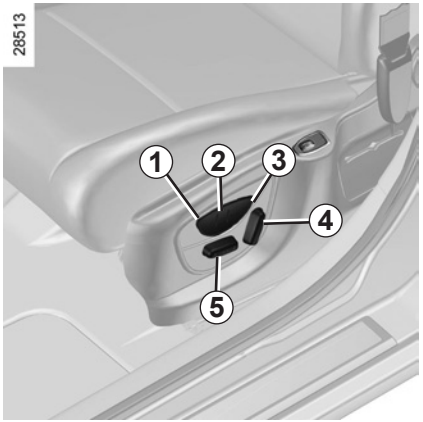

Storing your driving position

– Adjust the seat using switches ***4*** and ***5*** (see previous page);

– press one of buttons ***1***, ***2*** or ***3*** until a beep is heard: the driving position is stored;

– to store other driving positions repeat this procedure with the other buttons.

Recalling a stored driving position

With the vehicle stationary, briefly press button ***1***, ***2*** or ***3*** depending on the required stored driving position.

Note: recall of the stored driving position is interrupted if one of the seat adjustment buttons is pressed during recall.

When driving, it is not possible to recall a driving position.

We would advise you not to recline the seatbacks too far to ensure that the effectiveness of the seat belts is not reduced.

Nothing should be placed on the floor (area in front of driver) as such objects may slide under the pedal during braking manoeuvres, thus obstructing its use.

Three door version

Manually controlled seats
Lift handle ***1*** and slide the seat forward.

To bring the seat into position, bring the seatback into position.

Do not move handle ***1*** and handle ***2*** at the same time.

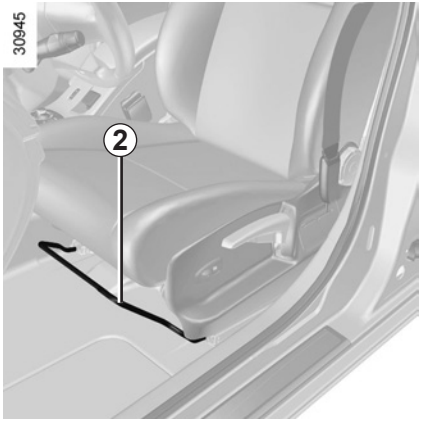

Electrically controlled seats
Lift handle ***1*** and tilt the seatback completely: the seat moves forward.

To bring the seat into position, bring the seatback into position. The seat returns to its original position.

When a person, an object or a child seat prevents the front seats from locking, perform the following operations:
- ask all of the passengers to leave the vehicle and remove any bulky objects from the rear seats;
- lock the seat(s) in the initial position again;
- move the seat(s) forwards in order to create sufficient space;
- ask the passengers to get back into the vehicle, and refit the child seat or objects on the rear seats.

Check that no object or person prevents the front seat from locking. If so, remove any obstacles behind the front seats. Adjust the seat to allow sufficient room in the rear. The rear occupants/objects should then return to the vehicle.

Repeat the above until the seat is locked correctly.

Risk of seat moving on its runners during vehicle acceleration or braking.

Always wear your seat belt when travelling in your vehicle. You must also comply with the legislation of the particular country you are in.

Make sure that the rear bench seat is locked in position correctly so that the rear seat belts will operate efficiently. Refer to Section 3 “Rear bench seat: functions”.

Incorrectly adjusted or twisted seat belts may cause injuries in the event of an accident.

Use one seat belt per person, whether child or adult.

Even pregnant women should wear a seat belt. In this case, ensure that the lap belt is not exerting too much pressure on the abdomen, but do not allow any slack.

Before starting, first adjust your driving position, then ask all occupants to adjust their seat belts to ensure optimum protection.

Adjusting your driving position

- **Sit well back in your seat** (having first removed your coat or jacket). This is essential to ensure your back is positioned correctly;
- **adjust the distance between the seat and the pedals.** Your seat should be as far back as possible while still allowing you to depress the clutch pedal fully. The seatback should be adjusted so that your arms are slightly bent when you hold the steering wheel;
- **adjust the position of your headrest.** For maximum safety, your head must be as close as possible to the headrest;
- **adjust the height of the seat.** This adjustment allows you to select the seat position which offers you the best possible view;
- **adjust the position of the steering wheel**.

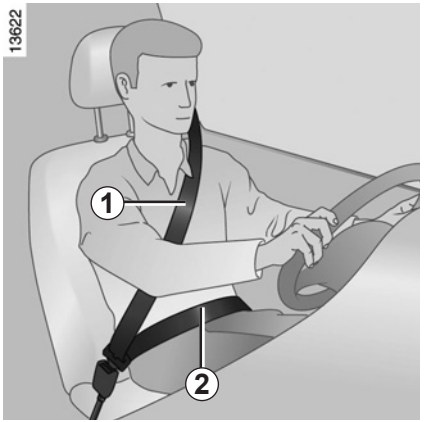

Adjusting the seat belts

Sit with your back firmly against the seatback.

Shoulder strap ***1*** should be as close as possible to the base of the neck but not on it.

Lap belt ***2*** should be worn flat over the thighs and against the pelvis.

The belt should be worn so that it is as close as possible to your body, i.e.: avoid wearing heavy clothing or keeping bulky objects under the belts, etc.

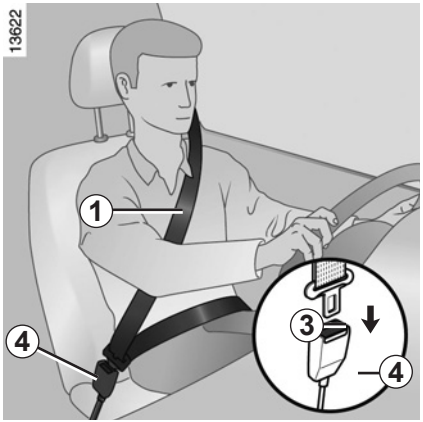

Locking

Unwind the belt **slowly and smoothly** and ensure that buckle ***3*** locks into catch ***4*** (check that it is locked by pulling on buckle ***3***). If the belt jams, allow it to return slightly before attempting to unwind it again.

If your seat belt is completely jammed, pull slowly, but firmly, so that just over 3 cm unwinds. Allow it to return slightly before attempting to unwind it again.

If there is still a problem, contact an approved dealer.

Front seat belt reminder warning light

This lights up on the central display when the engine is started then, if the driver's or front passenger's seat belt (if this seat is occupied) is not fastened and the vehicle has reached approximately 12 mph (20 km/h), it flashes and a bleep sounds for around 2 minutes.

Note: an object placed on the passenger seat base may activate the warning light in some cases.

Rear seat belt reminder (depending on vehicle)

the warning light on the central display lights up accompanied by a message on the instrument panel indicating the number of seat belts buckled for approximately 30 seconds each time:

– the vehicle is started;
– a door is opened;
– a rear seat belt is fastened or unfastened.

Check that the rear passengers are wearing seat belts and that the number of seat belt shown as fastened corresponds to the number of rear bench seat places occupied.

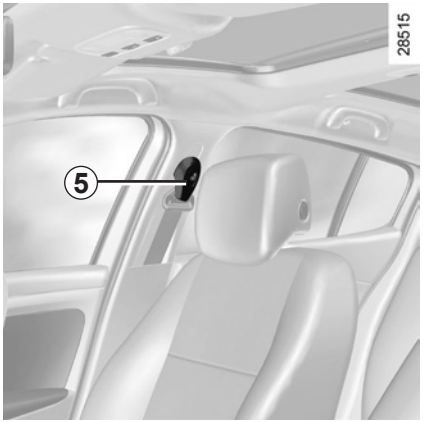

Adjusting the front seat belt height

(depending on vehicle)

Press button ***5*** to adjust the seat belt height so that shoulder strap ***1*** is worn as shown previously:

– to lower the seat belt, press button ***5*** and lower the seat belt at the same time;
– to raise the seat belt, press button ***5*** and raise the seat belt at the same time.

Make sure that the seat belt is locked in position correctly after you have adjusted it.

Unfastening

Press button ***6*** and the seat belt will be rewound by the inertia reel. Guide the belt.

Note: when driving, if a rear seat belt is unbuckled, the message “Rear seat belt unbuckled” appears on the instrument panel.

The following information applies to the vehicle’s front and rear seat belts.

– No modification may be made to the component parts of the restraint system (belts and seats and their mountings) fitted originally. For special operations (e.g. fitting child seats) contact an approved Dealer.

– Do not use devices which allow any slack in the belts (e.g. clothes pegs, clips, etc.): a seat belt which is worn too loosely may cause injury in the event of an accident.

– Never wear the shoulder strap under your arm or behind your back.

– Never use the same belt for more than one person and never hold a baby or child on your lap with your seat belt around them.

– The belt should never be twisted.

– Following an accident, have the seat belts checked and replaced if necessary. Always replace your seat belts as soon as they show any signs of wear.

– Make sure that the buckle is inserted into the appropriate catch.

– Ensure that no objects are placed in the area around the seat belt catch as they could prevent it from being properly secured.

– When putting back the rear bench seat, take care that the seat belts are correctly positioned so that they can be used properly.

METHODS OF RESTRAINT IN ADDITION TO THE FRONT SEAT BELTS (1/4)

Depending on the vehicle, they are composed of:

- **seat belt inertia reel pretensioners;**
- **lap belt pretensioners;**
- **chest-level load limiters;**
- **anti-submarining air bags;**
- **air bags for driver and front passenger.**

These systems are designed to act independently or together when the vehicle is subjected to a frontal impact.

Depending on the severity of the impact, the system can trigger:

- seat belt locking;
- the seat belt inertia reel pretensioner (which engages to correct seat belt slack);
- the low volume front air bag;
- the lap seat belt pretensioners to hold the occupant in his seat;
- the large volume front air bag.

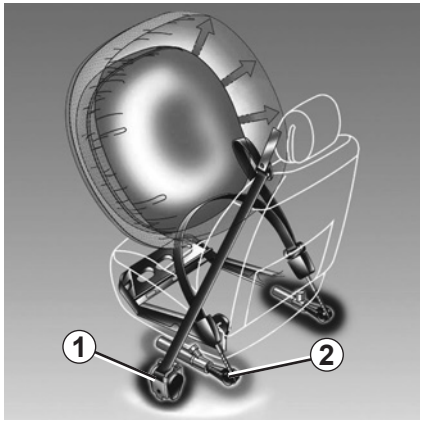

Pretensioners

The pretensioners hold the seat belt against the body, holding the occupant more securely against the seat, thus increasing the seat belt's efficiency.

In the event of a severe frontal impact and if the ignition is switched on, the system may engage the following depending on the force of the impact:

- seat belt inertia reel pretensioner ***1*** which instantly retracts the seat belt;
- the lap pretensioner ***2*** on the front seats.

- Have the entire restraint system checked following an accident.
- No operation whatsoever is permitted on any part of the system (pretensioners, air bags, computers, wiring) and the system components must not be reused on any other vehicle, even if identical.
- To avoid incorrect triggering of the system which may cause injury, only qualified personnel from an approved dealer may work on the pretensioner and air bag system.
- The electric trigger system may only be tested by a specially trained technician using special equipment.
- When the vehicle is scrapped, contact an approved dealer for disposal of the pretensioner and air bag gas generators.

Load limiter

Above a certain severity of impact, this mechanism is used to limit the force of the belt against the body so that it is at an acceptable level.

Anti-submarining air bag

Located on each of the front seats, it deploys in order to prevent the occupant from sliding under the seat belt.

Air bags for driver and front passenger

Fitted to the driver and passenger side.

Depending on the vehicle, the presence of this equipment is indicated by the word “Airbag” on the steering wheel, dashboard (air bag zone ***A***) and a symbol on the lower section of the windscreen.

Each air bag system consists of:

– an air bag and gas generator fitted on the steering wheel for the driver and in the dashboard for the front passenger;

– an electronic unit for system monitoring which controls the gas generator electrical trigger system;

– remote sensors;

– a single warning light on the instrument panel.

The air bag system uses pyrotechnic principles. This explains why, when the air bag inflates, it will generate heat, produce smoke (this does not mean that a fire is about to start) and make a noise upon detonation. In a situation where an air bag is required, it will inflate immediately and this may cause some minor, superficial grazing to the skin or other problems.

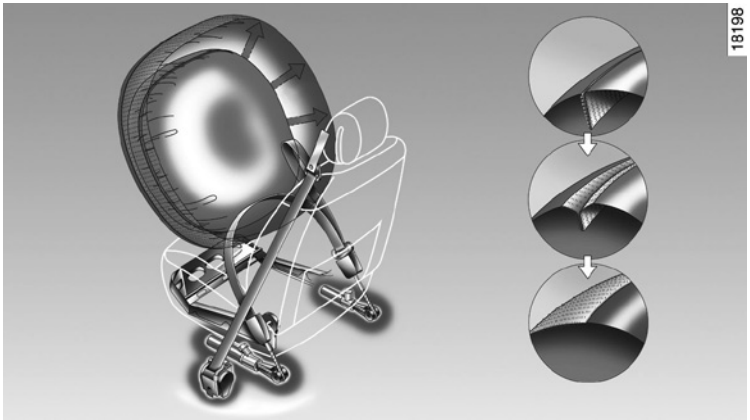

Operation

This system is only operational when the ignition is switched on.

In a severe **frontal** impact, the air bags inflate rapidly, cushioning the impact of the driver's head and chest against the steering wheel and the front passenger against the dashboard. The air bags then deflate immediately so that the passengers are not in any way hindered from leaving the vehicle.

Special feature of the front air bag

After a violent impact, it has two deployment volumes and integrates a ventilation system:

– small volume air bag, this is the first stage of operation;

– large volume air bag, the air bag seams rip so that a larger volume of gas is released into the bag (for the most severe impacts).

METHODS OF RESTRAINT IN ADDITION TO THE FRONT SEAT BELTS (4/4)

All of the warnings below are given so that the air bag is not obstructed in any way when it is inflated and also to prevent the risk of serious injuries caused by items which may be dislodged when the air bag inflates.

Warnings concerning the driver's air bag

– Do not modify the steering wheel or the steering wheel boss.

– Do not cover the steering wheel boss under any circumstances.

– Do not attach any objects (badge, logo, clock, telephone holder, etc.) to the steering wheel boss.

– The steering wheel must not be removed (except by qualified personnel from our Network).

– When driving, do not sit too close to the steering wheel. Sit with your arms slightly bent (see the information on "Adjusting your driving position" in Section 1). This will allow sufficient space for the air bag to deploy correctly and be fully effective.

Warnings concerning the passenger air bag

– Do not attach or glue any objects (badge, logo, clock, telephone holder, etc.) to the dashboard on or near the air bag.

– Do not place anything between the dashboard and the passenger (pet, umbrella, walking stick, parcels, etc.).

– The passenger must not put his or her feet on the dashboard or seat as there is a risk that serious injuries may occur. In general, parts of the body should be kept away from the dashboard (knees, hands, head, etc.).

– The devices in addition to the front passenger seat belt should be reactivated as soon as a child seat is removed, to ensure the protection of the passenger in the event of an impact.

A REAR-FACING CHILD SEAT MUST NOT BE FITTED TO THE FRONT PASSENGER SEAT UNLESS THE ADDITIONAL RESTRAINT SYSTEMS, I.E. THE PASSENGER AIR BAG, ARE DEACTIVATED.

(refer to the information on "Child safety: deactivating/activating the front passenger air bag" in Section 1)

Warnings concerning the anti-submarining air bag

Do not let a child under the age of 12 sit in this seat. When triggered, the anti-submarining air bag may project objects left on the seat base with a great deal of force.
Risk of serious injury.

Force limiter

Above a certain severity of impact, this mechanism is used to limit the force of the belt against the body so that it is at an acceptable level.

– Have the entire restraint system checked following an accident.

– No operation whatsoever is permitted on any part of the system (air bags, electronic control units, wiring) and the system components must not be reused on any other vehicle, even if identical.

– Only qualified personnel from our Network may work on the air bags; otherwise the system may trigger accidentally and cause injury.

Side air bags

These air bags are fitted to the front seats and are activated at the sides of the seats (door side) to protect the occupants in the event of a severe side impact.

Curtain air bags

These are air bags fitted along the sides of the vehicle in the ceiling which trigger along the front and rear side windows to protect the passengers in case of a severe side impact.

Warnings concerning the side air bag

– **Fitting seat covers:** seats equipped with an air bag require covers specifically designed for your vehicle. Contact an approved Dealer to find out if these covers are available. The use of any covers other than those designed for your vehicle (and including those designed for another vehicle) may affect the operation of the air bags and reduce your protection.

– Do not place any accessories, objects or even pets between the seatback, the door and the internal fittings. Do not cover the seatback with any items such as clothes or accessories. This may prevent the air bag from operating correctly or cause injury when the air bag is deployed.

– No work or modification whatsoever may be carried out on the seat or internal fittings, except by qualified personnel from an approved dealer.

– The area between the rear bench seatback and the trim is the area of air bag operation: no objects must be placed here.

ADDITIONAL METHODS OF RESTRAINT

All of the warnings below are given so that the air bag is not obstructed in any way when it is inflated and also to prevent the risk of serious injuries caused by items which may be dislodged when the air bag inflates.

The air bag is designed to complement the action of the seat belt. Both the air bags and seat belts are integral parts of the same protection system. It is therefore essential to wear seat belts at all times. If seat belts are not worn, the occupants are exposed to the risk of serious injury in the event of an accident. It may also increase the risk of minor superficial injuries occurring when the air bag is deployed, although such minor injuries are always possible with air bags.

If the vehicle should overturn or suffer a rear impact, however severe, the pre-tensioners and air bags are not always triggered. Shocks to the underbody of the vehicle, e.g. from pavements, potholes or stones, can all trigger these systems.

– No work or modification **whatsoever** may be carried out on any part of the air bag system (air bags, pretensioners, computer, wiring harness, etc.), except by qualified personnel from an approved dealer.

– To ensure that the system is in good working order and to avoid accidental triggering of the system which may cause injury, only qualified Network personnel may work on the air bag system.

– As a safety precaution, have the air bag system checked if your vehicle has been involved in an accident, or is stolen or broken into.

– When selling or lending the vehicle, inform the user of these points and hand over this driver's handbook with the vehicle.

– When scrapping your vehicle, contact your approved dealer for disposal of the gas generator(s).

Operating faults

Warning light ***1*** will light up on the instrument panel when the ignition is switched on and then go out after a few seconds.

If it does not come on when the ignition is switched on, or if it comes on when the engine is running, there is a fault with the system (air bags, pretensioners, etc.) in the front and/or rear seats.

Contact your approved dealer as soon as possible. Your protection will be reduced until this fault is rectified.

Carrying children

Children, and adults, must be correctly seated and strapped in for all journeys. The children being carried in your vehicle are your responsibility.

A child is not a miniature adult. Children are at risk of specific injuries as their muscles and bones have not yet finished growing. The seat belt alone would not provide suitable protection. Use an approved child seat and ensure you use it correctly.

To prevent the doors being opened, use the “Child safety” device (refer to the information on “Opening and closing the doors” in Section 1).

A collision at 30 mph (50 km/h) is the same as falling a distance of 10 metres.
Transporting a child without a restraint is the equivalent of allowing him or her to play on a fourth-floor balcony without railings.
Never travel with a child held in your arms. In the event of an accident, you will not be able to keep hold of the child, even if you yourself are wearing a seat belt.
If your vehicle has been involved in a road accident, replace the child seat and have the seat belts and ISOFIX anchorage points checked.

Driver’s responsibility when parking or stopping the vehicle

Never leave an animal, child or adult who is not self-sufficient alone on your vehicle, even for a short time.

They may pose a risk to themselves or to others by starting the engine, activating equipment such as the electric windows or by locking the doors.

Also, in hot and/or sunny weather, please remember that the temperature inside the passenger compartment increases very quickly.

RISK OF DEATH OR SERIOUS INJURY.

Using a child seat

The level of protection offered by the child seat depends on its ability to restrain your child and on its installation. Incorrect installation compromises the protection it offers the child in the event of harsh braking or an impact.

Before purchasing a child seat, check that it complies with the regulations for the country you are in and that it can be fitted in your vehicle. Consult an approved dealer to find out which seats are recommended for your vehicle.

Before fitting a child seat, read the manual and respect its instructions. If you experience any difficulties during installation, contact the manufacturer of the equipment. Keep the instructions with the seat.

Set a good example by always fastening your seat belt and teaching your child:
- to strap themselves in correctly;
- to always get in and out of the car at the kerb, away from busy traffic.

Do not use a second-hand child seat or one without an instruction manual.

Check that there are no objects in the vicinity of the child seat which could impede its operation.

Never leave a child unattended in the vehicle.

Check that your child is always strapped in and that the belt or safety harness used is correctly set and adjusted. Avoid wearing bulky clothing which could cause the belts to slacken.

Never let your child put their head or arms out of the window.

Check that the child is in the correct position for the entire journey, especially if asleep.

Rear-facing child seats
A baby's head is, proportionally, heavier than that of an adult and its neck is very fragile. Transport the child in this position as long as possible (until the age of 2 at the very least). It supports both the head and the neck.
Choose a bucket type seat for best side protection and change it as soon as the child's head is higher than the shell.

Forward-facing child seats
The child's head and abdomen need to be protected as a priority. A forward-facing child seat which is firmly attached to the vehicle will reduce the risk of impact to the head. Ensure your child travels in a forward-facing seat with a harness or buckle for as long as their size permits. Choose a bucket type seat for optimum side protection.w

Booster cushions
From 15 kg or 4 years, the child can travel using a booster seat, which will enable the seat belt to be adapted to suit his size and shape. The booster seat cushion must be fitted with guides to position the seat belt on the child's thighs rather than the stomach. It is recommended that you use a seat-back which can be adjusted in terms of height to position the seat belt in the centre of the shoulder. It must never rest on the neck or on the arm.
Choose a bucket type seat for optimum side protection.

CHILD SAFETY: choosing a child/baby seat mounting (1/2)

There are two ways of attaching child seats: via the seat belt or using the ISOFIX system.

Attachment via the seat belt

The seat belt must be adjusted to ensure that it is effective in the event of harsh braking or an impact.

Ensure that the strap paths indicated by the child seat manufacturer are respected.

Always check that the seat belt is correctly fastened by pulling it up, then pulling it out fully whilst pressing on the child seat.

Check that the seat is correctly held by moving it from side to side and back to front: the seat should remain firmly fixed.

Check that the child seat has not been installed at an angle and that it is not resting against a window.

Do not use the child seat if it may unfasten the seat belt restraining it: the base of the seat must not rest on the buckle and/or catch of the seat belt.

The seat belt must never be twisted or the tension relieved. Never pass the shoulder strap under the arm or behind the back.
Check that the seat belt has not been damaged by sharp edges.
If the seat belt does not operate normally, it will not protect the child. Consult an approved dealer. Do not use this seat until the seat belt has been repaired.

No modifications may be made to the component parts of the restraint system (ISOFIX seat belts, seats and their mountings) originally fitted.

Attachment using the ISOFIX system

Authorised ISOFIX child seats are approved in accordance with regulation ECE-R44 in one of the three following scenarios:
– ISOFIX universal 3-point forwardfacing seat
– ISOFIX semi-universal 2-point seat
– specific

For the latter two, check that your child seat can be installed by consulting the list of compatible vehicles.

Attach the child seat with the ISOFIX locks, if these are provided. The ISOFIX system allows quick, easy, safe fitting. The ISOFIX system consists of 2 rings and, in some cases, a third ring.

Before using an ISOFIX child seat that you purchased for another vehicle, check that its installation is authorised. Consult the list of vehicles which can be fitted with the seat from the equipment manufacturer.

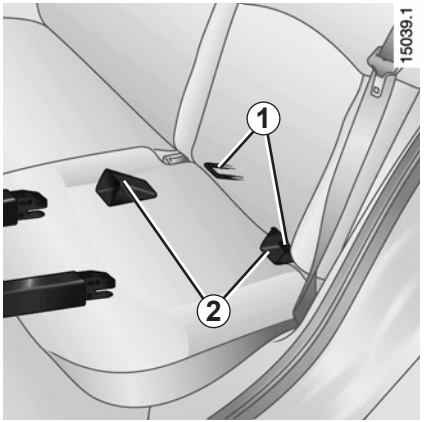

The two rings ***1*** are located between the seatback and the seat base of the seat and are identified by a marking.

To ensure your child seat can be easily fitted and locked on rings ***1***, use access guides ***2*** on the child seat.

The third ring is used to attach the upper strap on some child seats.

Pass the belt between the seatback and the rear parcel shelf (to remove the parcel shelf: refer to Section 3 “Parcel shelf”). Fix the hook on one of the rings ***3*** located in the luggage compartment (visible for three- and five-door versions; under the carpet and indicated with a marking on the Sport tourer version).

Pull the belt so that the back of the child seat comes into contact with the vehicle seatback.

The ISOFIX anchorage points have been exclusively designed for child seats with the ISOFIX system. Never fit a different type of child seat, seat belt or other objects to these anchorage points.

Check that nothing is obstructing the anchorage points.

If your vehicle has been involved in a road accident, have the ISOFIX anchorage points checked and replace your child seat.

Some seats are not suitable for fitting child seats. The diagram on the following page shows you how to attach a child seat.

The types of child seats indicated may not be available. Before using a different child seat, check with the manufacturer that it can be fitted.

Fit the child seat in a rear seat wherever possible.

Check that when installing the child seat in the vehicle it is not at risk of coming loose from its base.

If you have to remove the headrest, check that it is correctly stored so that it does not come loose under harsh braking or impact.

Always attach the child seat to the vehicle even if it is not in use so that it does not come loose under harsh braking or impact.

In the front seat

The laws concerning children travelling in the front passenger seat differ in every country. Consult the legislation in force and follow the indications on the diagram on the following page.

Before fitting a child seat in this seat (if authorised):

– lower the seat belt as far as possible;
– move the seat as far back as possible;
– gently tilt the seatback away from vertical (approximately 25°);
– on equipped vehicles, raise the seat base as far as possible.

Do not change these settings after the child seat is installed.

RISK OF DEATH OR SERIOUS INJURY: before fitting a rear-facing child seat in this position, check that the air bag has been deactivated (refer to the information on “Child safety: deactivating/activating the front passenger air bag” in Section 1).

In the rear side seat

A carrycot can be installed across the vehicle and will take up at least two seats. Position the child with his or her feet nearest the door.

Move the front seat as far forward as possible to install a rear-facing child seat, then move back the seat or seats in front in accordance with the child seat instructions.

For the safety of the child in the forward-facing seat, do not move the seat in front back past the middle of the runner, do not tilt the seatback too far (maximum of 25°) and raise the seat as much as possible.

Check that the forward-facing child seat is resting against the back of the vehicle seat and that the headrest of the vehicle is not obstructing its use.

Ensure that the child seat or the child’s feet do not prevent the front seat from locking correctly. Refer to the information on the “Front seat” in Section 1.

Three- and five-seater versions

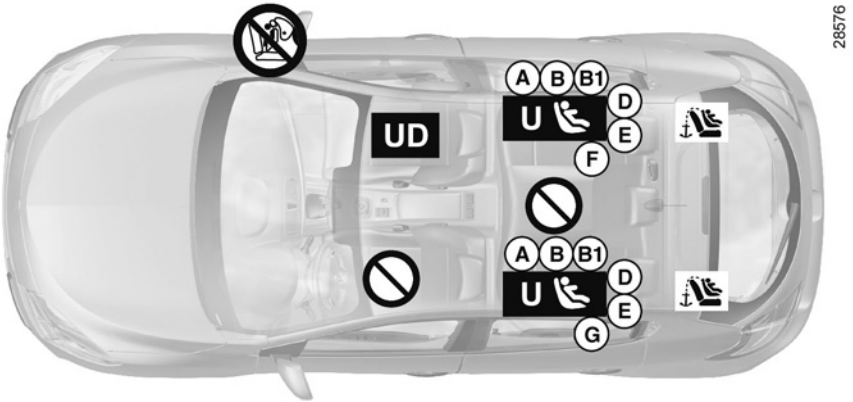

Check the status of the air bag before fitting a child seat or allowing a passenger to use the seat.

RISK OF DEATH OR SERIOUS INJURY: before fitting a rear-facing child seat in the front passenger seat, check that the air bag has been deactivated (refer to the information on “Child safety: deactivating/activating the front passenger air bag” at the end of the paragraph).

Seat not suitable for fitting child seats.

Child seat attached using the belt

U Seat which allows a child seat with “Universal” approval to be attached by a seat belt.

UD Seat which **only** allows a **rear-facing seat** with “Universal” approval to be attached with a seat belt.

Child seat attached using the ISOFIX mounting

Seat which allows an ISOFIX child seat to be fitted.

The rear seats are fitted with an anchorage point which allows a forward-facing ISOFIX child seat with universal approval to be fitted. The anchorage points are located in the luggage compartment and are visible.

The size of the ISOFIX child seat is indicated by a letter:

– A, B and B1: for forward-facing seats in group 1 (9 to 18 kg);

– C: rear-facing seats in group 1 (9 to 18 kg);

– D and E: shell seat or rear-facing seats in group 0 or 0+ (less than 13 kg);

– F and G: cots in group 0 (less than 10 kg).

Using a child safety system which is not approved for this vehicle will not correctly protect the baby or child. They risk serious or even fatal injury.

CHILD SAFETY: Fitting a child seat (3/6)

The table below summarises the information already shown on the diagram on the previous page, to ensure the regulations in force are respected.

Type of child seat (three and five door versions)	Weight of the child	Seat size ISOFIX	Passenger front seat (1) (2)	Rear side seats	Rear centre seat
Carrycot fitted across the vehicle Group 0	< 10 kg	F - G	X	U - IL (3)	X
Rear-facing shell seat Group 0 or 0+	< 13 kg	E	U	U - IL (4)	X
Rear-facing seat Group 0+ and 1	< 13 kg and 9 to 18 kg	D	U	U - IL (4)	X
		C	U	U (4)	X
Forward-facing seat Group 1	9 to 18 kg	A, B, B1	X	U - IUF - IL (5)	X
Booster seat Group 2 and 3	15 to 25 kg and 22 to 36 kg		X	U (5)	X

(1) RISK OF DEATH OR SERIOUS INJURY: before installing a rear-facing child seat on the front passenger seat, check that the air bag has been deactivated (refer to the information on “Child safety: deactivating/activating the front passenger air bag” at the end of the section).

CHILD SAFETY: Fitting a child seat (4/6)

X = Seat not suitable for fitting child seats.

U = Seat allowing a child seat with “Universal” approval to be attached by seat belt; check that it can be fitted correctly.

IUF/IL = On equipped vehicles, seat which allows a child seat with “Universal, semi-universal or vehicle specific” approval to be fitted using the ISOFIX system. Check that it can be fitted correctly.

(2) Only a rear-facing child seat can be fitted in this seat: position the vehicle seat as far back as possible and gently tilt the seat-back (approximately 25°).
(3) A carrycot can be fitted across the vehicle and will take up at least two seats. Position the child with his or her feet nearest the door.
(4) Move the front seat as far forward as possible to fit a rear-facing child seat, then move back the seat(s) in front in accordance with the child seat instructions.
(5) Forward-facing child seat; position the seatback of the child seat in contact with the seatback of the vehicle seat. Adjust the headrest, or remove it if necessary. Do not push the front seat more than halfway back on its runners and do not recline the seatback more than 25°.

Sport tourer versions

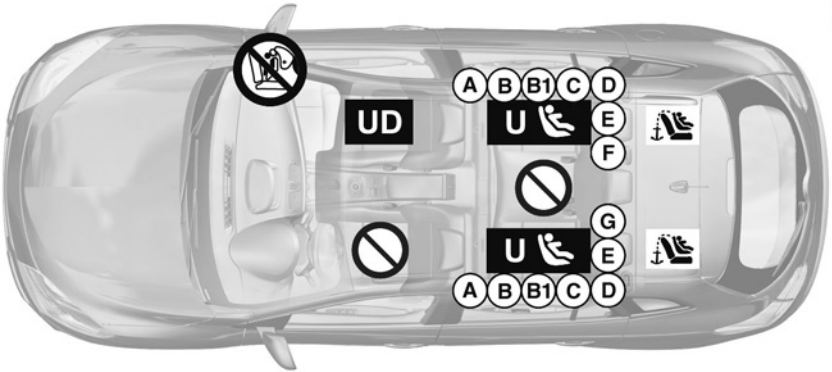

Check the status of the air bag before fitting a child seat or allowing a passenger to use the seat.

RISK OF DEATH OR SERIOUS INJURY: before fitting a rear-facing child seat in the front passenger seat, check that the air bag has been deactivated (refer to the information on “Child safety: deactivating/activating the front passenger air bag” at the end of the paragraph).

Seat not suitable for fitting child seats.

Child seat attached using the belt

U Seat which allows a child seat with “Universal” approval to be attached by a seat belt.

UD Seat which **only** allows a **rear-facing seat** with “Universal” approval to be attached with a seat belt.

Child seat attached using the ISOFIX mounting

Seat which allows an ISOFIX child seat to be fitted.

The rear seats are fitted with an anchorage point which allows a forward-facing ISOFIX child seat with universal approval to be fitted. The anchorage points are located under the luggage compartment carpet and are indicated by a marking.

The size of the ISOFIX child seat is indicated by a letter:

– A, B and B1: for forward-facing seats in group 1 (9 to 18 kg);
– C: rear-facing seats in group 1 (9 to 18 kg);
– D and E: shell seat or rear-facing seats in group 0 or 0+ (less than 13 kg);
– F and G: cots in group 0 (less than 10 kg).

Using a child safety system which is not approved for this vehicle will not correctly protect the baby or child. They risk serious or even fatal injury.

CHILD SAFETY: Fitting a child seat (6/6)

The table below summarises the information already shown on the diagram on the previous page, to ensure the regulations in force are respected.

Type of child seat (sport tourer version)	Weight of the child	Seat size ISOFIX	Front passenger seat (1) (5)	Rear side seats	Rear centre seat
Carrycot fitted across the vehicle Group 0	< 10 kg	F - G	X	U - IL (2)	X
Shell seat/rear-facing seat Group 0, or 0+ and 1	< 13 kg and 9 to 18 kg	E, D, C	U	U - IL (3)	X
Forward-facing seat Group 1	9 to 18 kg	A, B, B1	X	U - IUF - IL (4)	X
Booster seat Group 2 and 3	15 to 25 kg and 22 to 36 kg		X	U (4)	X

X = Seat not suitable for fitting child seats.
U = Seat allowing a child seat with “Universal” approval to be attached by seat belt; check that it can be fitted correctly.
IUF/IL = On equipped vehicles, seat which allows a child seat with “Universal, semi-universal or vehicle specific” approval to be fitted using the ISOFIX system. Check that it can be fitted correctly.

(1) Only a rear-facing child seat can be fitted in this seat: position the vehicle seat as far back as possible and gently tilt the seatback (approximately 25°).
(2) A carrycot can be fitted across the vehicle and will take up at least two seats. Position the child with his or her feet nearest the door.
(3) Move the front seat as far forward as possible to fit a rear-facing child seat, then move back the seat(s) in front in accordance with the child seat instructions.
(4) Forward-facing child seat; position the seatback of the child seat in contact with the seatback of the vehicle seat. Adjust the headrest, or remove it if necessary. Do not push the front seat more than halfway back on its runners and do not recline the seatback more than 25°.

(5) RISK OF DEATH OR SERIOUS INJURY: before installing a rear-facing child seat on the front passenger seat, check that the air bag has been deactivated (refer to the information on “Child safety: deactivating/activating the front passenger air bag” at the end of the section).

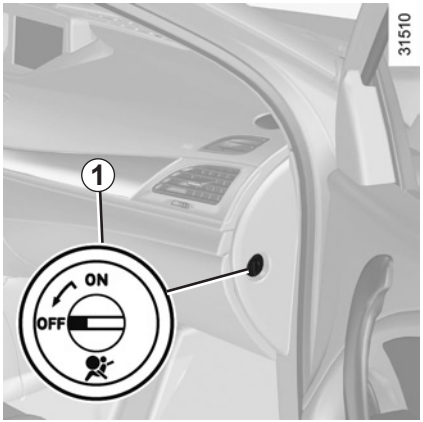

Deactivating the front passenger air bags
(on equipped vehicles)

You **must** deactivate certain devices in addition to the front passenger seat belt before fitting a child seat in the front passenger seat.

To deactivate the air bags: with the vehicle stationary, push and turn lock ***1*** to the OFF position.

With the ignition on, it is **essential** to check that warning light ***2*** is lit on the central display and, depending on the vehicle, that the message “Passenger airbag off” is displayed.

This light remains permanently lit to let you know that you can fit a child seat.

DANGER

Since operation of the front passenger air bag is not compatible with the position of a rear-facing child seat, **NEVER** fit a rear-facing child seat on a front passenger seat with an active front air bag. The child may suffer very serious injuries if the air bag is triggered.

The passenger air bag must only be deactivated or activated **with the ignition off**.
If it is interfered with when the vehicle is being driven, indicator lights and will come on.
Switch the ignition off then on again to reset the air bag in accordance with the lock.

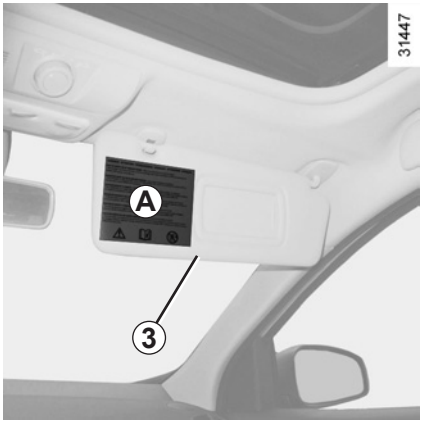

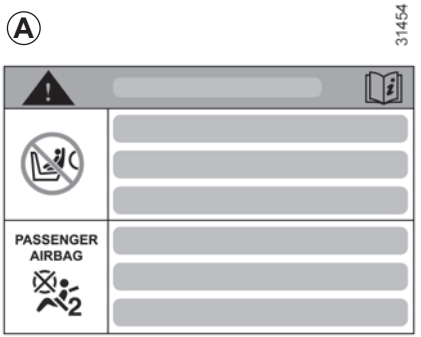

The markings on the dashboard and labels ***A*** on each side of passenger sun blind ***3*** (example: label shown above) remind you of these instructions.

DANGER

Since operation of the front passenger air bag is not compatible with the position of a rear-facing child seat, **NEVER** fit a rear-facing child seat on a front passenger seat with an active front air bag. The child may suffer very serious injuries if the air bag is triggered.

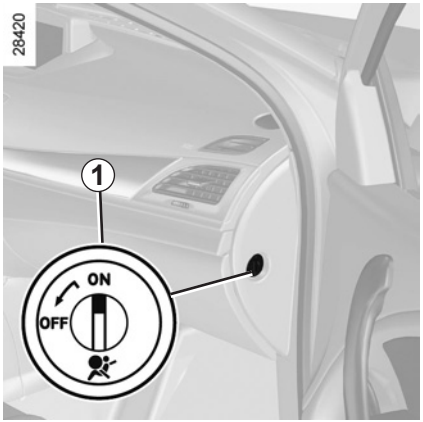

Activating the front passenger air bags

You should reactivate the air bag as soon as you remove the child seat from the front passenger seat to ensure the protection of the front passenger in the event of an impact.

To reactivate the air bags: when the vehicle is stationary, push and turn lock ***1*** to the ON position.

With the ignition on, it is **essential** to check that warning light ***4*** is lit on the central display, and that it goes out after a few seconds **.**

Operating faults

It is forbidden to fit a rear-facing child seat to the front passenger seat if the air bag activation/deactivation system is faulty.

Allowing any other passenger to sit in that seat is not recommended.

If warning lights and are lit at the same time.

Contact your approved dealer as soon as possible.

The passenger air bag must only be deactivated or activated **with the ignition off**.
If it is interfered with when the vehicle is being driven, indicator lights and will come on.
Switch the ignition off then on again to reset the air bag in accordance with the lock.

DRIVING POSITION: LEFT-HAND DRIVE (1/2)

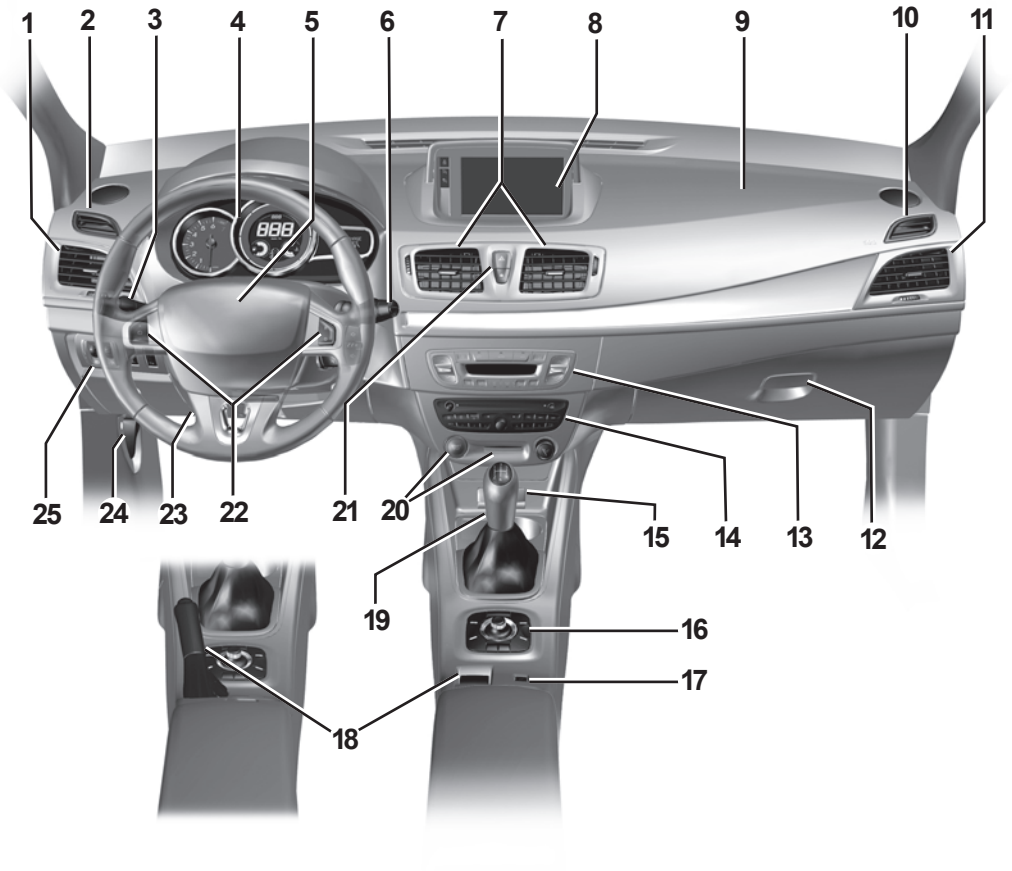

DRIVING POSITION: LEFT-HAND DRIVE (2/2)

The equipment fitted, described below, DEPENDS ON THE VERSION AND COUNTRY.

1 Side air vent.

2 Side window demister outlet.

3 Stalk for:

- direction indicator lights,
- exterior lights,
- front fog lights,
- rear fog light.

4 Instrument panel.

5 Driver's air bag and horn location.

6 – Steering column stalk for windscreen and rear screen wash/wipe.

- Trip computer information readout control and vehicle settings personalisation menu.

7 Centre air vents.

8 – Display of the time, temperature, radio information, navigation system information, etc.

- Driver and front passenger seat belt reminder warning light and front passenger air bag activated/deactivated warning lights.

9 Location for passenger air bag.

10 Side window demister outlet.

11 Side air vent.

12 Glove box.

13 Heating and ventilation controls.

14 Location for radio, navigation system, etc.

15 Accessories socket.

16 Control for some multimedia equipment.

17 Cruise control/speed limiter control.

18 Electronic parking brake or manual parking brake control.

19 Gear lever.

20 Engine start/stop button and RENAULT card reader.

21 Central door locking/unlocking controls and hazard warning lights switch.

22 Cruise control/speed limiter controls.

23 Control for adjusting steering wheel height and reach.

24 Bonnet release.

25 Controls for:

- electric headlight beam adjustment,
- control instruments lighting rheostat,
- activation/deactivation of the traction control,
- activation/deactivation of the parking distance control system.

DRIVING POSITION: RIGHT-HAND DRIVE (1/2)

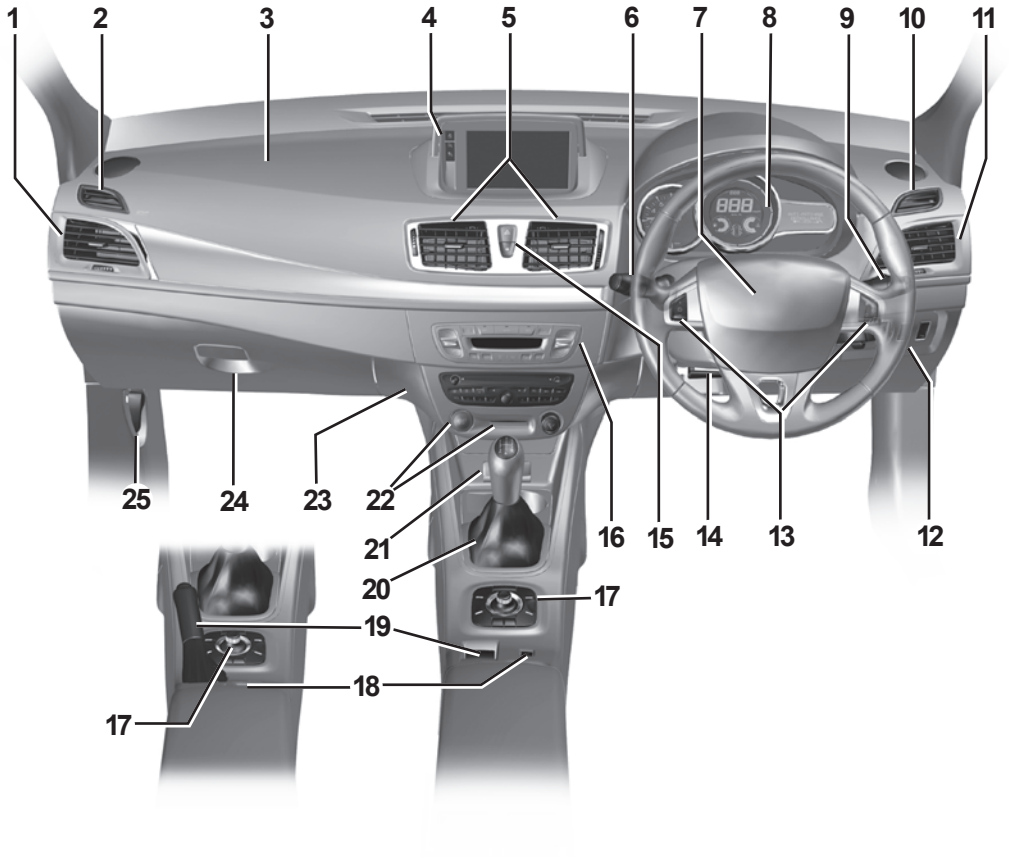

DRIVING POSITION: RIGHT-HAND DRIVE (2/2)

The equipment fitted, described below, DEPENDS ON THE VERSION AND COUNTRY.

1 Side air vent.

2 Side window demister outlet.

3 Location for passenger air bag.

4 – Display (depending on the vehicle) for time, temperature, radio information, navigation system information, etc.

– Driver and front passenger seat belt unfastened and passenger air bag deactivated warning lights

5 Centre air vents.

6 Stalk for:

– direction indicator lights,

– exterior lights,

– front fog lights,

– rear fog light.

7 Location for driver's air bag and horn.

8 Instrument panel.

9 – Steering column stalk for windscreen and rear screen wash/wipe,

– Trip computer information readout control and vehicle settings customisation menu.

10 Side window demister outlet.

11 Side air vent.

12 Controls for:

– headlight beam height remote adjustment;

– lighting rheostat for control instruments;

– activation/deactivation of the traction control;

– activation/deactivation of the parking distance control system.

13 Cruise control/speed limiter controls

14 Control for adjusting steering wheel height and reach.

15 Central door locking/unlocking controls and hazard warning lights switch.

16 Heating and ventilation controls.

17 Control for some multimedia equipment.

18 Cruise control/speed limiter control.

19 Electronic parking brake or manual parking brake control.

20 Gear lever.

21 Accessories socket.

22 Engine start/stop control and RENAULT card reader.

23 Location for radio, navigation system, etc.

24 Glove box.

25 Bonnet release.

WARNING LIGHTS (1/4)

The presence and operation of the warning lights DEPEND ON THE EQUIPMENT AND COUNTRY.

The instrument panel *A* lights up when the ignition is switched on. You can adjust the brightness of the instrument panel by turning control knob ***1***.
In some cases, the appearance of a warning light is accompanied by a message.

The warning light means you should **drive very carefully** to an approved Dealer as soon as possible. If you fail to follow this recommendation, you risk damaging your vehicle.

Side light tell-tale light

Main beam headlight tell-tale light

Dipped beam headlight tell-tale light

Front fog light tell-tale light

Rear fog light tell-tale light

Warning light STOP requires you to stop immediately, for your own safety, as soon as traffic conditions allow. Switch off the engine and do not restart it. Contact an approved Dealer.

Left-hand direction indicator tell-tale light

Right-hand direction indicator tell-tale light

Handbrake "on" or electronic parking brake warning light
Refer to the information on the "Handbrake" or "Electronic parking brake" in Section 2.

If no lights or sounds are apparent, this indicates a fault in the instrument panel. This indicates that it is essential to stop immediately (as soon as traffic conditions allow). Ensure that the vehicle is correctly immobilised and contact an approved Dealer.

WARNING LIGHTS (2/4)

The presence and operation of the warning lights DEPEND ON THE EQUIPMENT AND COUNTRY.

Speed limiter and cruise control warning light

See the information on the “Speed limiter” and “Cruise control” in Section 2.

Fuel economy indicator light

This lights up to advise you to change to a higher gear (up arrow) or lower gear (down arrow).

Warning light

This lights up when the ignition is switched on and goes out as soon as the engine is started. It can light up in conjunction with other indicator lights and/or messages on the instrument panel.

It means you should **drive very carefully** to an approved Dealer as soon as possible. If you fail to follow this recommendation, you risk damaging your vehicle.

Air bag warning light

This comes on when the ignition is switched on and goes out after a few seconds.

If it does not light up when the ignition is switched on, or comes on when the engine is running, there is a fault in the system.

Contact your approved Dealer as soon as possible.

Preheating warning light (diesel version)

This should come on when the ignition is switched on. It indicates that the heater plugs are in operation. This goes out as soon as the engine starts.

Anti-lock braking warning light

This lights up when the ignition is switched on and goes out after a few seconds.

If it does not go out after the ignition is switched on, or lights up when driving, there is a fault with the ABS. Braking will then be as normal, without the ABS. Contact an approved Dealer as soon as possible.

Toxic Fume Filter System Warning Light

This lights up when the ignition is switched on and goes out when the engine is started.

– If it lights up continuously, consult your approved Dealer as soon as possible;
– if it flashes, reduce the engine speed until the light stops flashing. Contact your approved Dealer as soon as possible.

Refer to the information on “Antipollution, fuel economy and driving” in Section 2.

WARNING LIGHTS (3/4)

The presence and operation of the warning lights DEPEND ON THE EQUIPMENT AND COUNTRY.

STOP light

This lights up when the ignition is switched on and goes out as soon as the engine is started. It comes on with other warning lights and/or messages, and is accompanied by a beep.

It requires you to stop immediately, for your own safety, as soon as traffic conditions allow. Switch off the engine and do not restart it.

Contact an approved Dealer.

Oil pressure warning light

If it comes on when you are driving accompanied by the STOP warning light and a beep, it is essential to stop and switch off the ignition. Check the oil level (refer to the information on the “Engine oil level” in Section 4). If the level is correct, the light has come on for another reason; contact an approved Dealer.

Brake circuit fault warning light

If it comes on during braking and is accompanied by the STOP warning light and a beep, it indicates that the fluid level in the circuit is low or that there is a braking system fault. Stop as soon as traffic conditions allow and contact an approved Dealer.

Engine coolant temperature warning light

This lights up when the ignition is switched on and goes out when the engine is started. If it comes on when you are driving accompanied by the STOP warning light and a beep, it is essential to stop and switch off the ignition.

Check the coolant level (refer to the information on “Levels” in Section 4). If the level is correct, the light has come on for another reason; consult an approved dealer.

Battery charge warning light

If it comes on together with the STOP warning light and a beep, it indicates that the electrical circuit is overcharged or undercharged.

WARNING LIGHTS (4/4)

The presence and operation of the warning lights DEPEND ON THE EQUIPMENT AND COUNTRY.

Front seat belt reminder warning light

This lights up on the central display when starting the engine then, if the driver's or front passenger's seat belt (if this seat is occupied) is not fastened and the vehicle has reached approximately 12 mph (20 km/h), it flashes and a bleep sounds for around 120 seconds.

Note: an object placed on the passenger seat base may activate the warning light in some cases.

Rear seat belt reminder (depending on vehicle)

the warning light on the central display lights up accompanied by a message on the instrument panel indicating the number of seat belts buckled for approximately 30 seconds each time:

– the vehicle is started;
– a door is opened;
– a rear seat belt is fastened or unfastened.

Check that the rear passengers are wearing seat belts and that the number of seat belt shown as fastened corresponds to the number of rear bench seat places occupied.

Heated seats operating indicator

This indicates that one of the heated seats is in operation.

Low fuel level warning light

This comes on when the ignition is switched on and goes out after a few seconds. If it comes on when driving accompanied by a beep, fill up with fuel as soon as possible. There is only approximately 30 miles (50 km) worth of fuel left after the warning light first comes on.

Particle filter

Refer to the information on "Special features of diesel versions" in Section 2.

Rev counter *1* (rpm × 1 000)

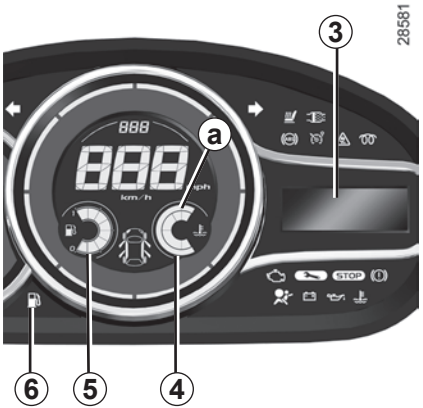

Engine oil level low warning

When the engine is started, display ***3*** alerts the driver when the oil level is at its minimum. Refer to Section 4: “Engine oil level”.

The first time the alert appears, it can be cleared by pressing one of the buttons on the end of stalk ***2***.

Subsequent warnings will disappear automatically after 30 seconds.

Fuel level gauge *5*

If the minimum level is reached, indicator light ***6*** comes on and a beep sounds. Fill up as soon as possible. There is only approximately 30 miles (50 km) worth of fuel left after the warning light first comes on.

Coolant temperature indicator *4*

In normal use, indicator ***4*** should be before area ***a***. Under severe conditions, the needle may enter this area. This is not serious unless the STOP warning light comes on, accompanied by a message on the instrument panel and a beep.

Trip computer and warning system

Refer to the information on the “Trip computer and warning system” in Section 1.

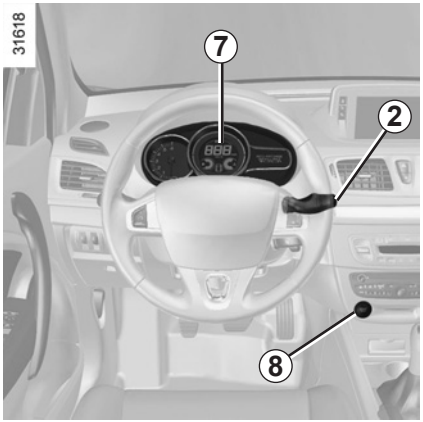

Speedometer *7* (mph or km/h)

Overspeed buzzer
Depending on the vehicle and country, a buzzer sounds for approximately 10 seconds every 40 seconds, as long as the vehicle is travelling in excess of 72 mph (120 km/h).

Instrument panel in miles
(option to switch to km/h)

– With the ignition off, press one of the buttons ***9*** or ***10*** at the end of stalk ***2*** and start button ***8***;

– the speedometer unit indicator flashes for approximately ten seconds, then the new unit is displayed: release button ***9*** or ***10*** when the unit stops flashing.

To return to the previous mode, repeat the same operation.

Note: once the battery is switched off, the trip computer and warning system automatically returns to the original unit of measurement.

Trip computer and warning system *1*

Depending on the vehicle, this includes the following functions:

– distance travelled;

– journey parameters;

– information messages;

– operating fault messages (connected to the warning light);

– warning messages (connected to the STOP warning light);

– vehicle settings customisation menu.

All these functions are described on the following pages.

Display selection keys *2* and *3*

Scroll through the following information upwards (button ***2***) or downwards (button ***3***) by pressing briefly and successively (the display depends on the vehicle equipment and country).

a) total mileage and trip mileage recorder;

b) journey parameters:
   – fuel used;
   – average fuel consumption;
   – current fuel consumption;
   – estimated range;
   – distance travelled;
   – average speed;

c) mileage before service;

d) tyre pressure monitor;

e) vehicle settings customisation menu;

f) trip log, operating faults and information message readout.

Trip mileage resetting

With “trip mileage recorder” selected on the display, press button ***2*** or ***3*** until the mileage recorder resets to zero.

Resetting the journey parameters (reset button)

With one of the journey parameters selected on the display, press button ***2*** or ***3*** until the display resets.

Interpreting some of the values displayed after resetting

The values showing average fuel consumption, range and average speed will become more stable and reliable the further you travel after pressing the reset button.

For the first few miles after pressing the reset key you will notice that the range increases as you travel. This range takes into account the average fuel consumption since the last time the reset button was pressed. Therefore, the average fuel consumption may decrease when:

– the vehicle stops accelerating;

– the engine reaches its operating temperature (if the engine was cold when reset key was pressed);

– when driving from a built-up area onto the open road.

Automatic resetting of the journey parameters

Resetting occurs automatically when the maximum value of any of the parameters is exceeded.

TRIP COMPUTER AND WARNING SYSTEM (3/10)

The display of information shown below DEPENDS ON THE VEHICLE EQUIPMENT AND COUNTRY.

Examples of selections	Interpreting the display selected
101668 km 112.4 km (28729)	**a) Total mileage and trip mileage recorder.**
CARBURANT 8.5 L (28714) Carburant 20 L (28722)	**b) Journey parameters.** **Fuel used.** Fuel consumed since the last reset.
MOYENNE 7.2 L/100 (28711) Moyenne 7.2 L/100 (28721)	**Average fuel consumption** since the last reset. The value is displayed after having travelled at least 400 metres since the last reset.

TRIP COMPUTER AND WARNING SYSTEM (4/10)

The display of information shown below DEPENDS ON THE VEHICLE EQUIPMENT AND COUNTRY.

Examples of selections		Interpreting the display selected
INSTANTANEE 9.4 L/100 28707	Instantanée 9.4 L/100 28720	**Current fuel consumption.** This value is displayed above a speed of approximately 18 mph (30 km/h).
AUTONOMIE 541 km 28713	Autonomie 541 km 28723	**Estimated range with remaining fuel.** This range takes into account the average fuel consumption since the last time the reset button was pressed. The value is displayed after driving 400 metres.
DISTANCE 52.2 km 28710	Distance 359 km 28724	**Distance travelled** since the last reset.
MOYENNE 89.6 km/h 28706	Moyenne 89.6 km/h 28725	**Average speed** since the last reset. The value is displayed after driving 400 metres.

The display of information shown below DEPENDS ON THE VEHICLE EQUIPMENT AND COUNTRY.

Examples of selections		Interpreting the display selected
REVISION DANS 30000km /24 MOIS 28712	Prévoir révision sous 100km 28717 Prévoir révision sous 10 jours 28718	**c) Mileage before service.** Distance remaining until the next service (displayed in miles (kilometres) and months), then when the service nears, several scenarios are possible: – range less than **900 miles (1,500 km)** or **one month:** the message “Service due in” is displayed accompanied by the nearest term (distance or time); – range equal to **0 miles (0 km)** or **date of service reached:** the message “service vehicle” is displayed accompanied by warning light . The vehicle requires a service as soon as possible.

Note: depending on the vehicle, the distance before a service changes according to driving style (frequent driving at low speeds, door-to-door journeys, extensive use at idle speed, towing a trailer etc.). The distance remaining until the next service can therefore decrease more quickly in some cases than the actual distance travelled.

Resetting the display after the service in accordance with the maintenance schedule.
The mileage before service must only be reset after a service which complies with the recommendations in the maintenance schedule.

If you decide to change the oil more frequently, do not reset this data each time the oil is changed to avoid exceeding the replacement intervals for other parts in the maintenance schedule.

Special note: To reset the distance before service, press and hold one of the display reset buttons for approximately 10 seconds until the display shows the mileage permanently.

Journey parameters (1/2)

The display of information shown below DEPENDS ON THE VEHICLE EQUIPMENT AND COUNTRY.

Examples of selections		Interpreting the display selected
PNEUS AVANT 2.2 2.2 (28709) PNEUS ARRIERE 2.2 2.2 (28708)	2.5 2.5 2.5 2.5 (28727)	**d) Tyre pressure monitor** Refer to the information on the “Tyre pressure monitor” in Section 2.

Journey parameters (2/2)

The display of information shown below DEPENDS ON THE VEHICLE EQUIPMENT AND COUNTRY.

Examples of selections	Interpreting the display selected
Menu de réglage appui long (27226)	**e) Vehicle settings customisation menu.** Enables certain vehicle functions to be set (instrument panel language, parking distance control, etc.). Refer to the information on “Vehicle settings customisation menu” in Section 1.
Pas de message mémorisé (27219)	**f) Trip log.** Successive display: – of information messages (passenger air bag OFF etc.), – of operating fault messages (check the injection system, etc.).

Information messages

These can help in the vehicle starting phase, or give information about a selection or a driving status.
Examples of information messages are given in the following pages.

Examples of messages	Interpreting the display selected
“Battery low start engine”	Indicates that the vehicle must be started to recharge the battery (eg. after the engine has been switched off for some time whilst listening to the radio).
“Please remove keycard”	Request to remove the RENAULT card from the reader when you leave the vehicle.
“Checking control functions”	Displayed with the ignition on when the vehicle is running self-diagnostics.
“Traction control off”	Indicates that you have deactivated the ASR function.
“Turn steering wheel + START”	Turn the steering wheel slightly whilst pressing the vehicle start button to unlock the steering column.
“No message available”	No warning is stored.
“Steering wheel not locked”	Indicates that the steering column has not been locked.
“Stop vehicle”	Indicates an electronic parking brake fault. Apply the electronic parking brake manually and ensure that the vehicle is immobilised using a chock.

Operating fault messages

These appear with the warning light and mean that you should drive very carefully to an approved Dealer as soon as possible. If you fail to follow this recommendation, you risk damaging your vehicle.

They disappear when the display selection key is pressed or after several seconds and are stored in the computer log. The warning light stays on. Examples of operating fault messages are given in the following pages.

Examples of messages	Interpreting the display selected
“Clean diesel filter”	Indicates the presence of water in the diesel filter.
“Check lighting”	Indicates a fault in the directional headlights.
“Check vehicle”	Indicates a fault on one of the pedal sensors or in the battery management system.
“Check airbag”	Indicates a fault in the restraint system in addition to the seat belts. In the event of an accident, it is possible that they may not be triggered.
“Check anti-pollution system”	Indicates a fault in the vehicle’s particle filter system.
“Check injection”	Indicates an engine fault.

Warning messages

These appear with the STOP warning light and require you to stop immediately, for your own safety, as soon as traffic conditions allow. Stop your engine and do not restart it. Contact an approved Dealer.

Examples of warning messages are given in the following pages. **Note:** the messages appear on the display either individually or alternately (when there are several messages to be displayed), and may be accompanied by a warning light and/or a beep.

Examples of messages	Interpreting the display selected
“Engine failure hazard”	Indicates engine overheating, or an injection or engine oil pressure fault.
“Power steering fault” or **“Risk of steering locking”**	Indicates a fault in the steering.
“Parking brake fault”	Indicates an electronic parking brake fault. Apply the electronic parking brake manually and ensure that the vehicle is immobilised using a chock.
“Battery charging fault”	Indicates a fault in the vehicle battery charging circuit (alternator etc.).
“Puncture”	Indicates a puncture on the tyre displayed on the instrument panel.

On equipped vehicles, this function, which is integrated in the trip computer and warning system ***1***, allows you to activate/deactivate some of the vehicle's functions.

Accessing the settings customisation menu

With the vehicle stationary, press either button ***2*** or ***3*** until the message "Settings menu: press and hold" appears on display ***1***. Press either button ***2*** or ***3*** for longer than 2 seconds to enter the menu.

Adjusting the settings

Press one of buttons ***2*** or ***3*** to select a function to change:

a) Auto door locking while driving;
b) Unlock driver's door only;
c) Auto rear wipe with reverse gear;
d) Auto dipped-beam headlights;
e) Front parking sensor;
f) Rear parking sensor;
g) Parking sensor volume ;
h) LANGUAGE.

☑ function activated

☐ function deactivated

Once a line has been selected, keep pressing either button ***2*** or ***3*** to change the function: If you select either "Parking sensor volume" or "LANGUAGE", you will be given a new choice of options (parking distance control volume or instrument panel language). In this case, make your selection and confirm it by holding either button ***2*** or ***3***, the value selected is shown by a ◉ in front of the line.

To exit the menu, select "EXIT" or "BACK" then confirm by holding either button ***2*** or ***3***. It may be necessary to carry out this operation several times.

The vehicle settings customisation menu cannot be used when driving. At speeds of above 12 mph (20 km/h) for vehicles with a manual gearbox (0 mph for vehicles with an automatic gearbox), the on-board display returns automatically to the trip computer and warning system mode.

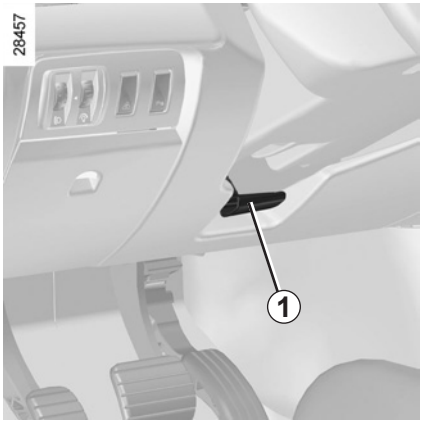

Height and reach adjustment

Pull lever ***1*** and move the steering wheel to the required position.

Then, push the lever back fully, beyond the point of resistance to lock the steering wheel.

Make sure that the steering wheel is correctly locked.

For safety reasons, only adjust the steering wheel when the vehicle is stationary.

Power-assisted steering

Variable power-assisted steering

The variable power-assisted steering system is equipped with an electronic control system which alters the level of assistance to suit the vehicle speed.

Steering is made easier during parking manoeuvres (for added comfort) whilst the force needed to steer increases progressively as the speed rises (for enhanced safety at high speeds).

Never leave the steering wheel at full lock while stationary.

Operating faults

The steering may become stiff when driving or when the steering wheel is turned repeatedly. This is due to the power assistance overheating. In this case, it must be allowed to cool down.

With the engine switched off, or if there is a system fault, it is still possible to turn the steering wheel. The force required will be greater.

Never switch off the ignition when travelling downhill, and avoid doing so in normal driving (assistance is not provided).

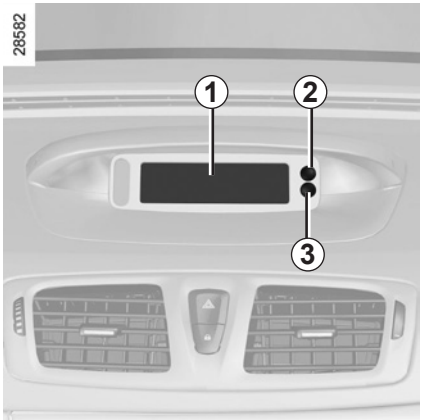

The time and, depending on the vehicle, the exterior temperature are displayed.

Resetting the clock *1*

On equipped vehicles, buttons ***2*** and ***3*** are used to set the clock.

Press button ***2*** to adjust the hours and button ***3*** to adjust the minutes.

Vehicles equipped with a navigation system, radio, etc.

For vehicles which are not fitted with buttons ***2*** and ***3***, refer to the specific equipment instructions to discover the special features.

If the electrical supply is cut (battery disconnected, broken supply wire, etc.), the clock will lose its time setting.

The time must then be set.

We recommend that you do not adjust these settings while driving.

External temperature indicator

Special note:

When the external temperature is between –3°C and +3°C, the °C characters flash (indicates risk of ice formation).

External temperature indicator

As ice formation is related to climatic exposure, local air humidity and temperature, the external temperature alone is not sufficient to detect ice.

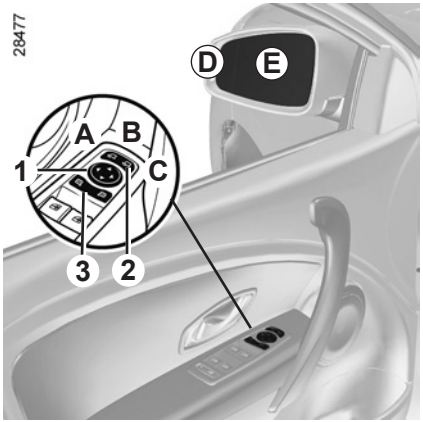

Door mirrors

Adjustment
Select the door mirror using switch ***3***, then use button ***1*** to adjust it to the desired position.

Heated door mirrors
Mirror de-icing is carried out at the same time as rear screen de-icing.

Folding door mirrors

The door mirrors automatically fold in when the vehicle is locked (switch ***2*** in position ***B***). In this case, they will fold out when the ignition is next switched on.

In any case, you can make the door mirrors fold in (switch ***2*** in position ***C***) or fold out (switch ***2*** in position ***A***).

Automatic mode is then deactivated. To reactivate it, position switch ***2*** to ***B***.

The driver's door mirror may have two clearly defined zones. Zone ***E*** shows what can normally be seen in an ordinary rear view mirror. Zone ***D*** increases rear side visibility.

The objects in zone *D* look much further away than they really are.

Interior rear view mirror

Its position can be adjusted.

Rear view mirror with lever *4*

When driving at night, to avoid being dazzled by the headlights of the vehicle behind, depress the little lever located behind rear view mirror ***4***.

Rear view mirror without lever *4*

The rear view mirror darkens automatically at night if you are being followed by a vehicle with its lights on.

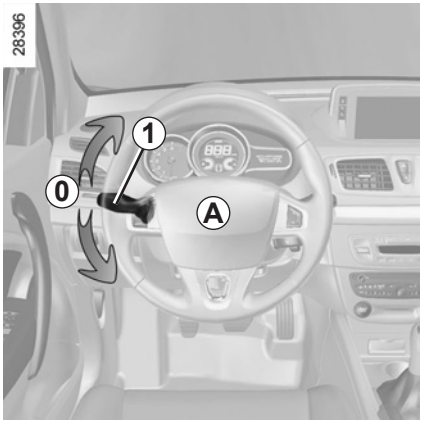

Horn

Press on the sides of the steering wheel boss ***A***.

Headlight flasher

Pull stalk ***1*** towards you to flash the headlights.

Direction indicators

Move stalk ***1*** parallel to the steering wheel and in the direction you are going to turn it.

When driving on the motorway, the steering wheel is not often turned enough to return the stalk automatically to ***0***. There is an intermediate position in which the stalk may be held when changing lanes.

When the stalk is released, it automatically returns to ***0***.

Hazard warning lights

Press switch ***2***. This switch activates all four direction indicators and the side indicator lights simultaneously. It must only be used in an emergency to warn drivers of other vehicles that you have had to stop in an area where stopping is prohibited or unexpected or that you are obliged to drive under special conditions.

Depending on the vehicle, the hazard warning lights may come on automatically under heavy deceleration. You can switch them off by pressing switch ***2***.

Side lights

Turn the ring ***2*** until the symbol is opposite mark ***3***. This indicator light on the instrument panel comes on.

Dipped beam headlights

Manual operation
Turn the ring ***2*** until the symbol is opposite mark ***3***. This indicator light on the instrument panel comes on.

Automatic operation
(depending on vehicle)
Turn ring ***2*** until the AUTO symbol is opposite mark ***3***: with the engine running, the dipped beam headlights switch on or off automatically depending on the brightness of the light outside, without any action on stalk ***1***.

Daytime running lights function

Depending on the vehicle, the daytime running lights come on automatically when the engine is started. To activate or deactivate this function, refer to the information on the “Vehicle settings customisation menu” in Section 1.

Main beam headlights

With the dipped beam headlights lit, pull stalk ***1*** towards you. This indicator light on the instrument panel comes on.

To return to the dipped headlight position, pull stalk ***1*** towards you again.

Before driving at night, check that the electrical equipment is operating correctly and adjust the headlight beams (if your vehicle is not carrying its normal load). As a general precaution, check that the lights are not obscured (by dirt, mud, snow or objects being transported).

Directional headlights

Depending on the vehicle, with the dipped beam headlights on and under certain conditions (speed, steering wheel angle, forwards gear selected, etc.) when cornering, the dipped beam headlights move to light the inside of the bend.

Operating faults

When the message “Check lighting”, accompanied by the warning light is displayed on the instrument panel, there is a lighting fault.
Consult an approved dealer.

Special note:

– If the dipped beam headlights are manually switched on and if the light is sufficient, the directional headlights will remain fixed;
– If the lights come on automatically when cornering, the directional headlights will start working from the next time the vehicle corners;
– When the dipped beam headlights are switched on with the engine running and the vehicle stationary, the lights move to reinitialise themselves. If not, there is a system fault.

Switching off the lights

There are two possibilities:

– Manually, move ring ***2*** to position **0**;
– automatically, the lights will go out when the engine is switched off, the driver’s door is opened or the vehicle is locked. In this case, the next time the engine is started the lights will be switched back on according to the position of the ring ***2***.

Note: if the fog lights are lit, the lights are not switched off automatically.

“See-me-home lighting” function

This function allows you to briefly switch on the dipped beam headlights (to provide light when opening a gate, etc.).

With the engine and lights off, and ring ***2*** in position **0**, pull stalk ***1*** towards you: the dipped beam headlights come on for approximately thirty seconds. To increase this duration, you may pull the stalk up to four times (total time restricted to two minutes). The message “See-me-home _ _ _”, accompanied by the lighting time is displayed on the instrument panel to confirm the action.

To switch off the lights before they go out automatically, turn ring ***2*** to any position, then return it to position **0**.

Lights-on reminder buzzer

If the lights are on after the engine is switched off, a warning beep sounds when the driver's door is opened to warn you that the lights are still on.

Front fog lights

Turn centre ring ***5*** on stalk ***1*** until the symbol faces mark ***6***, then release it.

Operation of the fog lights depends on the exterior lighting position selected, and an indicator light will light up on the instrument panel.

Rear fog light

Turn centre ring ***5*** on the stalk until the symbol faces mark ***6***, then release it.

Operation of the fog lights depends on the exterior lighting selected, and an indicator light will light up on the instrument panel.

To avoid inconveniencing other road users, remember to switch off the rear fog light when it is no longer needed.

Switching off the lights

Turn ring ***5*** again until mark ***6*** is opposite the symbol for the fog light that you wish to switch off. The corresponding indicator light on the instrument panel goes out.

The front and rear fog lights switch off when the exterior lights are switched off.

When driving in fog or snow, or when transporting objects which are higher than the roof, the headlights do not come on automatically.

Switching on the fog lights remains the responsibility of the driver: the indicator lights on the instrument panel inform you whether the fog lights are lit (indicator light on) or not (indicator light not on).

ELECTRICAL ADJUSTMENT OF THE DIPPED BEAM HEADLIGHTS

On vehicles fitted with this function, control ***A*** allows you to adjust the height of the beams according to the load.

Turn control ***A*** downwards to lower the headlights and upwards to raise them.

For vehicles not fitted with control ***A***, adjustment is automatic.

	Examples of positions for adjusting control *A* according to the load	
	Five door	**Three door**
Driver alone or with front passenger	0	0
Driver with one front passenger and one rear passenger	0	0
Driver with one front passenger and two or three rear passengers	1	1
Driver with one front passenger, three rear passengers and luggage	3	3

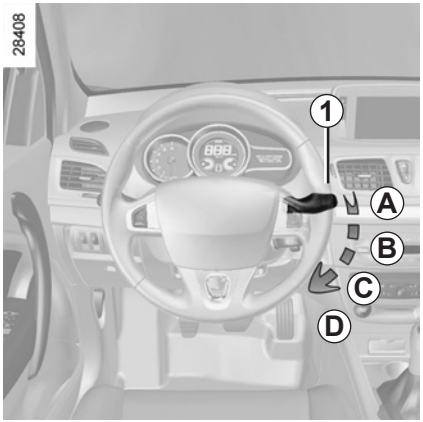

Vehicle fitted with intermittent windscreen wipers

A **park**

B **intermittent wiping**
The wipers will pause for several seconds between sweeps. It is possible to change the time between sweeps by turning ring ***2***.

C **normal wiping speed**

D **fast wiping speed**

Special note
When driving the vehicle, the wiping speed slows down whenever the vehicle stops. For example, fast wiping speed will slow to normal wiping speed. As soon as the vehicle moves off, wiping will return to the speed originally selected.
If stalk ***1*** is operated, it overrides and cancels the automatic function.

For all vehicles, position ***C*** can be accessed with the ignition on and positions ***B*** and ***D*** can only be accessed with the engine running.

Vehicle fitted with front windscreen wiper rain sensor

A **park**

B **automatic wiper function.**
When this position is selected, the system detects water on the windscreen and triggers the wipers at a suitable wiping speed. It is possible to change the triggering threshold and the time sweeps by turning ring ***2***:

– ***E***: minimum sensitivity

– ***F***: maximum sensitivity

note: in foggy weather or during snowfalls, the wiping is not automatically triggered and remains under the driver's control.

C **normal wiping speed**

D **fast wiping speed**

Windscreen washer

With the ignition on, pull stalk ***1*** then release.

A brief pull will trigger a single sweep of the wipers, in addition to the windscreen washer.

A longer pull will trigger three sweeps of the wipers followed, a few seconds later, by a fourth, in addition to the windscreen washer.

Headlight washers

Headlights on
On equipped vehicles, hold stalk ***1*** pulled towards you for about 1 second, and the headlight washers and windscreen washers will be activated at the same time.

Note: when the minimum windscreen washer fluid level is reached, the headlight washer system may be deprimed.

Fill the windscreen washer fluid and then activate the windscreen washer, **with the engine running**, to reprime the system.

In freezing or snowy weather, ensure they are not stuck to the windscreen (including the central area located behind the interior rear-view mirror) and the rear screen before starting the wipers (risk of motor overheating).

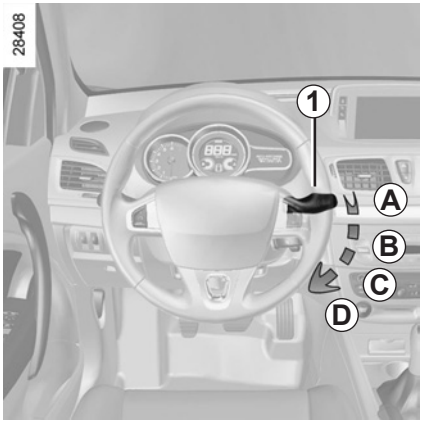

When working in the engine compartment, ensure that the windscreen wiper stalk is in position **A** (park).

Risk of injury.

Before any action on the windscreen (washing the vehicle, de-icing, cleaning the windscreen, etc.) return stalk ***1*** to position **A** (park).

Risk of injury and/or damage.

REAR SCREEN WASH/WIPE

Rear screen wiper

With the ignition on, turn ring ***A*** on stalk ***1*** to align the symbol with mark ***2*** then release it.

To stop the operation, pivot ring ***A*** again.

Wiping frequency varies with vehicle speed.

Rear screen washer/ wiper

With the ignition on, push the stalk.

Check the condition of the wiper blades. You are responsible for their service life:

– they must remain clean: clean the blades, windscreen and rear screen regularly with soapy water;

– do not use them when the windscreen or rear screen are dry;

– free them from the windscreen or rear screen when they have not been used for a long time.

In all cases, replace them as soon as they begin to lose efficiency: approximately once a year.

Before using the rear wiper, check that no object obstructs the travel of the blade.

Do not use the wiper arm to open or close the tailgate.

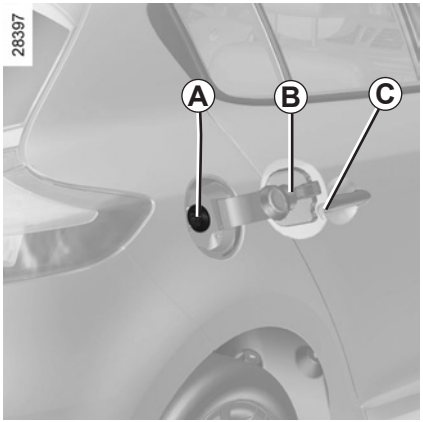

Useable fuel tank capacity:
59 litres approximately.

With the vehicle unlocked, to open the compartment ***B***, place your finger into the recess ***C***.

Valve ***A*** is integrated into the filler pipe. For details on filling the fuel tank, refer to the information on “Filling with fuel”.

To close it, press on the fuel filler flap by hand, as far as it will go.

Fuel grade

Use a high-grade fuel that complies with the legislation in force in each country and which **must** conform to the specifications given on the label on the cover ***B***. Refer to the information on “Engine specifications” in Section 6.

Diesel versions

It is **essential** to use diesel fuel that conforms with the information given on the label inside cover ***B***.

Petrol versions

It is **essential** to use unleaded petrol. The octane rating (RON) must conform to the specifications on the label inside fuel filler flap ***B***. Refer to the information on “Engine specifications” in Section 6.

Vehicles running on ethanol-based fuel

It is **essential** to use unleaded petrol or fuel containing a maximum of 85% ethanol (E85).

In very cold conditions, it may be very difficult or even impossible to start the engine. To avoid this problem, use unleaded petrol or, on equipped vehicles, use the heater integrated in the engine: connect the special end of the extension piece supplied into the socket integrated into the radiator grille and the other end into a **220V** socket for at least 6 hours before starting.

Note: you may notice an increase in fuel consumption with this type of fuel

Never press valve ***A*** with your fingers.

Do not wash the filler area with a high pressure washer.

Do not mix even small amounts of petrol (unleaded or E85) with diesel.

Do not use ethanol-based fuel if your vehicle is not compatible with this fuel.

Filling with fuel

Insert the nozzle to open the valve ***A*** and insert **fully** before turning it on to fill the fuel tank (risk of splashing).

Keep the nozzle in this position throughout the entire filling operation.
When the pump cuts out automatically at the end of the filling procedure, a maximum of two further filling attempts may be made, as there must be sufficient space in the fuel tank to allow for expansion.

Make sure that no water enters the fuel tank during filling. The valve ***A*** and its surround must remain clean.

Petrol versions
Using leaded petrol will damage the antipollution system and may lead to a loss of warranty.

To ensure that the fuel tank is not filled with leaded petrol, the fuel tank filler neck contains a restrictor fitted with a foolproof system which **only allows the nozzle for unleaded petrol to be used** (at the pump).

Persistent smell of fuel

If you notice a persistent smell of fuel you should:

– stop the vehicle as soon as traffic conditions allow and switch off the ignition;

– switch on the hazard warning lights and ask your passengers to leave the vehicle and to keep away from traffic;

– contact an approved Dealer.

No modifications whatsoever are permitted on any part of the fuel supply system (computers, wiring, fuel circuit, injector, protection covers, etc.) as this may be dangerous (such work must be undertaken by qualified Network personnel).

Running out of fuel on diesel versions

After a breakdown caused by completely running out of fuel, the system must be reprimed before the engine is restarted: Use bulb ***1***.

The engine can now be restarted.

If the engine does not start after several attempts, contact an approved Dealer.

Section 2: Driving

(Advice on use relating to fuel economy and the environment)

Running in 2.2
Starting the engine 2.3
Stopping the engine. 2.5
Special features of petrol versions 2.6
Special features of diesel versions 2.7
Gear lever 2.8
Handbrake. 2.8
Electronic parking brake 2.9
Advice: antipollution and fuel economy 2.12
Environment 2.15
Tyre pressure monitor 2.16
Driver correction devices/aids 2.19
Speed limiter 2.23
Cruise control 2.26
Parking distance control 2.30
Automatic gearbox. 2.33

RUNNING IN

Petrol version

Up to **600 miles (1,000 km)**, do not exceed 78 mph (130 km/h) in top gear or 3,000 to 3,500 rpm.

You may only expect top performance from your vehicle after approximately **1,800 miles** (3 000 km).

Service intervals: refer to the Maintenance Service Booklet for the vehicle.

Diesel version

For the first **900 miles (1,500 km)**, do not exceed 2,500 rpm. After completing this mileage you may drive faster, however, it is only after approximately 3600 miles (6,000 km) that you may reasonably expect full performance.

During the running in period, do not accelerate hard while the engine is still cold and do not let the engine over-rev.

Service intervals: refer to the Maintenance Service Booklet for the vehicle.

Remote control RENAULT card

When you get into the vehicle, insert the RENAULT card fully into card reader ***2***.

To start, press button ***1***. If a gear is engaged, depress the clutch pedal to start the vehicle.

Hands-free RENAULT card

The RENAULT card must be inserted in card reader ***2*** or in detection zone ***3***.

To start, depress the brake or clutch pedal and press button ***1***. If a gear is engaged, the vehicle may only be started by depressing the clutch pedal.

Starting

vehicles with an automatic gearbox

The lever should be in position **P**.

For all vehicles:

– if one of the starting conditions is not met the message “Press brake + START”, “Press clutch + START” or “Gear lever to P” is displayed on the instrument panel.

– In some cases it will be necessary to move the steering wheel while pressing start button ***1*** to assist in unlocking the steering column; a message on the instrument panel “Turn steering wheel + START” warns of this.

Starting with the tailgate open (in hands-free mode)

In this case, the RENAULT card must not be located in the luggage compartment.

Accessories function

(switching on the ignition)

Once you have gained access to your vehicle, you may use some of its functions (radio, navigation, wipers, etc.).

To use the other functions, press button ***1***, without depressing any pedals.

Note: depending on the vehicle, pressing button ***1*** starts the engine.

Never leave your vehicle with the RENAULT card in the reader or in the passenger compartment while there is a child (or an animal) in the vehicle, even for a short while.

They may pose a risk to themselves or to others by starting the engine.

Risk of serious injury.

Operating faults

In certain cases, the hands-free RENAULT card may not work:

– when the RENAULT card battery is drained, flat battery, etc.

– near to appliances operating on the same frequency as the card (monitor, mobile phone, video game, etc.);

– vehicle located in a high electromagnetic radiation zone.

The message “Please insert keycard” appears on the instrument panel.

Insert the RENAULT card fully into card reader ***2***.

Conditions for stopping the engine

The vehicle must stationary, with the lever positioned in **N** or **P** for vehicles with an automatic transmission.

Remote control RENAULT card

With the card in reader ***2***, press button ***1***: the engine will stop. Removing the card from the reader locks the steering column.

Special note

If the card is no longer in the reader when you try to switch the engine off, the message “No keycard Press and hold” appears on the instrument panel: press button ***1*** for longer than two seconds.

Hands-free RENAULT card

With the card in the vehicle, press button ***1***: the engine will stop. The steering column is locked when the driver’s door is opened or the vehicle is locked.

If the card is no longer in the passenger compartment when you try to switch the engine off, the message “No keycard Press and hold” appears on the instrument panel: press button ***1*** for longer than two seconds.

With the engine switched off, any accessories being used (radio, etc.) will continue to function for approximately 10 minutes.

When the driver’s door is opened, the accessories stop working.

When you leave your vehicle, especially if you have your RENAULT card with you, check that the engine is completely switched off.

Never leave your vehicle with the RENAULT card inside and never leave a child (or a pet) unsupervised, even for a short while.

There is a risk that they could start the engine or operate electrical equipment (electric windows etc.) and trap part of their body (neck, arms, hands, etc.).
Risk of serious injury.

Never switch off the ignition before the vehicle has stopped completely. Once the engine has stopped, the brake servo, power-assisted steering, etc. and the passive safety devices such as air bags and pretensioners will no longer operate.

The following operating conditions:

– driving for long periods when the low fuel level warning light is lit;
– using leaded petrol;
– using fuel or lubrication additives which are not approved.

Or operating faults such as:

– faulty ignition system, running out of fuel or disconnected spark plugs resulting in the engine misfiring or cutting out when driving;
– loss of power,

as they may cause the catalytic converter to overheat and thus reduce its efficiency, **or damage it irreparably and cause heat damage to the vehicle**.

If you notice any of the above operating faults, have the necessary repairs carried out as soon as possible by an approved Dealer.

These faults may be avoided by regularly taking your vehicle to an approved Dealer at the intervals specified in the Maintenance Service Booklet.

Starting problems

To avoid damaging the catalytic converter, **do not keep** trying to start the engine (using the start button, or by pushing or towing the vehicle) **without having identified and corrected the starting fault**.

If the fault cannot be identified, do not keep trying to start the engine, but contact an approved Dealer.

Do not park the vehicle or run the engine in locations where combustible substances or materials such as grass or leaves can come into contact with the hot exhaust system.

Diesel engine speed

Diesel engines are fitted with injection equipment **which prevents the engine speed being exceeded** irrespective of the gear selected.

If the message “Check anti-pollution system” is displayed on the instrument panel accompanied by the and warning light; consult an approved dealer straight away.

When driving, depending on the fuel grade used, it is possible that white smoke may be emitted.

This is due to the exhaust particle filter being cleaned automatically, and does not affect the way the vehicle runs.

Running out of fuel

If the **tank has been completely drained**, the system must be reprimed after the tank is refilled: see information on the “fuel tank” in section 1 before restarting the engine.

Precautions to be taken in winter

To avoid any faults in icy weather:

– ensure that the battery is always fully charged,

– always keep the diesel tank relatively full to avoid water vapour condensing in it and accumulating at the bottom of the tank.

Do not park the vehicle or run the engine in locations where combustible substances or materials such as grass or leaves can come into contact with the hot exhaust system.

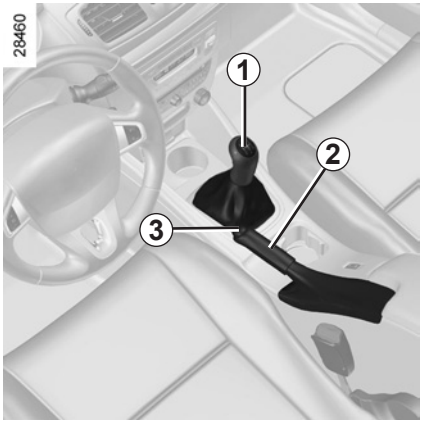

Selecting reverse gear

Vehicles with manual gearbox: follow the grid drawn on knob ***1***, and depending on the vehicle, lift ring against the gear lever knob to select reverse.

Vehicle with automatic gearbox: refer to the information on the “Automatic gearbox” in Section 2.

The reversing lights will come on as soon as reverse gear is selected with the ignition on.

An impact to the underside of the vehicle while manoeuvring (e.g.: striking a post, raised kerb or other street furniture) may result in damage to the vehicle (e.g.: deformation of the rear axle).

To avoid any risk of accident, have your vehicle checked by an approved Dealer.

Handbrake

To release:

Pull lever ***2*** up slightly, press button ***3*** and then lower the lever to the floor.

To apply:

Pull the lever ***2*** upwards and make sure the vehicle is immobilised.

Make sure that the handbrake is properly released when driving (red indicator light off), otherwise overheating, or even damage, may occur.

When stationary and depending on the slope and/or vehicle load, it may be necessary to pull up the handbrake at least two extra notches and engage a gear (1st or reverse gear) for vehicles with a manual gearbox or position **P** for vehicles with an automatic transmission.

Automatic operation

The electronic parking brake ensures vehicle immobilisation when the **engine is stopped and engine Start/ Stop button *1*** is pressed**.**

In all other instances, e.g. engine stalling, the electronic parking brake is not applied automatically. Manual mode must be used.

For certain country-specific model versions, the automatic brake application function is not activated. Refer to the information on “Manual operation”.

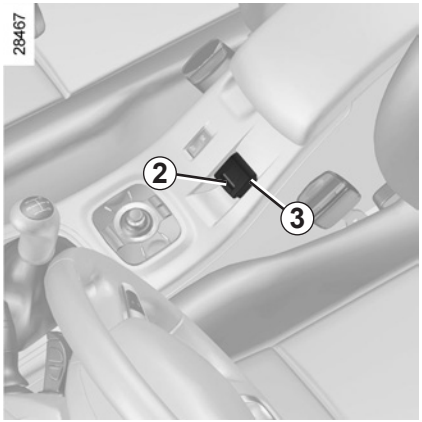

To confirm that the electronic parking brake is applied, the message “Parking brake on” and indicator light (Ⓟ) on the instrument panel and indicator light ***2*** on switch ***3*** light up.

After the engine is switched off, indicator light ***2*** goes out several minutes after the electronic parking brake has been applied and indicator light (Ⓟ) goes out when the vehicle is locked.

Note:

To indicate that the electronic parking brake is applied or released, a beep sounds and the message “Apply parking brake” appears on the instrument panel:

– with the engine running: when the driver’s door is opened;

– with the engine switched off (eg. when the engine stalls): when a front door is opened.

In this case, pull and release switch ***3*** to apply the electronic parking brake.

Automatic releasing of the electronic parking brake

The brake will be released as soon as the vehicle moves, by accelerating with a gear selected and the engine running.

Before leaving the vehicle, check that the electronic parking brake is fully applied. Indicator light ***2*** on switch ***3*** and indicator light (Ⓟ) on the instrument panel light up to show that the parking brake is applied but go out when the doors are locked.

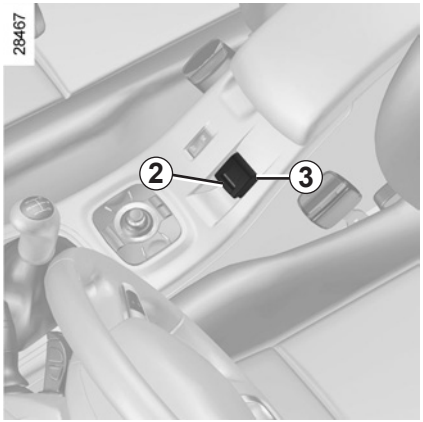

Manual operation

You can control the electronic parking brake manually.

Applying the electronic parking brake

Pull switch ***3***. Indicator lights ***2*** and (Ⓟ) light up on the instrument panel.

Releasing the electronic parking brake

With the ignition on, depress the brake pedal then press button ***3***: indicator lights ***2*** and (Ⓟ) go out.

Brief stop

To manually activate the electronic parking brake, (when stopping at a red light, or stopping when the engine is running, etc.): pull and release switch ***3***. The brake is released as soon as the vehicle is started up again.

Special cases

When parking on a slope or towing a trailer, pull switch ***3*** for a few seconds to obtain the maximum braking effect.

To park the vehicle without applying the electronic parking brake (if there is a risk of freezing, for example):

– with the engine running and RENAULT card in reader ***4***, switch off the engine by pressing engine Start/Stop button ***1***;

– select a gear (manual gearbox) or position **P** (automatic gearbox);

– depress the brake pedal and press switch ***3*** at the same time;

– remove the RENAULT card from the card reader.

Versions with an automatic gearbox

For safety reasons, automatic release is deactivated when the driver's door is open or not shut properly and the engine is running (in order to prevent the vehicle from moving without the driver). The "Release parking brake manually" message appears on the instrument panel when the driver depresses the accelerator.

Never leave your vehicle without moving the selector lever to position **P** or **N**. This is because when the vehicle is stationary with the engine running and a gear engaged, the vehicle may begin to move if you accelerate.

There is a risk of accidents.

Operating faults

– If there is a fault, the warning light illuminates on the instrument panel accompanied by the "Check parking brake" message and, in some cases, the warning light.

Contact an approved Dealer as soon as possible.

If no lights or sounds are apparent, this indicates a fault in the instrument panel. This indicates that it is essential to stop immediately (as soon as traffic conditions allow). Ensure that the vehicle is correctly immobilised and contact an approved Dealer.

– If there is an electronic parking brake fault, warning lights STOP light up accompanied by the "Parking brake fault" message, a beep and in certain cases indicator light .

This means that you must stop as soon as traffic conditions allow.

It is therefore essential to immobilise the vehicle by engaging first gear (manual gearbox) or position **P** (automatic gearbox). If the slope requires it, chock the vehicle.

ADVICE: antipollution, fuel economy and driving (1/3)

Your vehicle complies with criteria for recycling and recovering vehicles at the end of their service life which will come into force in 2015.

Some parts of your vehicle have therefore been designed to facilitate future recycling.

These parts are easy to remove so that they can be recovered and reprocessed by recycling companies.

By virtue of its design, moderate fuel consumption and initial settings, your vehicle also conforms to current antipollution regulations. The manufacturer is actively striving to reduce pollutant exhaust gas emissions and to save energy. But the fuel consumption of your vehicle and the level of pollutant exhaust gas emissions are also your responsibility. Ensure that it is maintained and used correctly.

Aiding fuel economy

Depending on the vehicle, in order to optimise consumption, an indicator light on the instrument panel will inform you of the best moment to upshift or downshift gears:

shift up a gear;

shift down a gear.

Maintenance

It is important to remember that failure to respect antipollution regulations could lead to legal action being taken against the vehicle owner. In addition, replacing engine, fuel supply system and exhaust components with parts other than those originally recommended by the manufacturer may alter your vehicle so that it no longer complies with antipollution regulations.

Have your vehicle adjusted and checked by an approved Dealer, in accordance with the instructions given in your maintenance schedule: they will have all the equipment necessary for ensuring that your vehicle is maintained to its original standard.

Engine adjustments

– **ignition:** this does not require adjustment.

– **spark plugs:** for optimum fuel economy, efficiency and performance the specifications laid down by our Design Department must be strictly applied.

  If the spark plugs have to be changed, use the make, type and gap specified for your vehicle's engine. Contact an approved dealer for this.

– **idle:** this does not require adjustment.

– **air filter, diesel filter:** a clogged element reduces performance. It must be replaced.

Exhaust gas monitoring system

The exhaust gas monitoring system will detect any operating faults in the vehicle's antipollution system.

If this system malfunctions, toxic substances may be released into the atmosphere or damage may occur.

This warning light on the instrument panel will indicate if there are any faults in the system:
This lights up when the ignition is switched on and goes out when the engine is started.

– If it lights up continuously, consult an approved Dealer as soon as possible;

– if it flashes, reduce the engine speed until the light stops flashing. Contact your approved dealer as soon as possible.

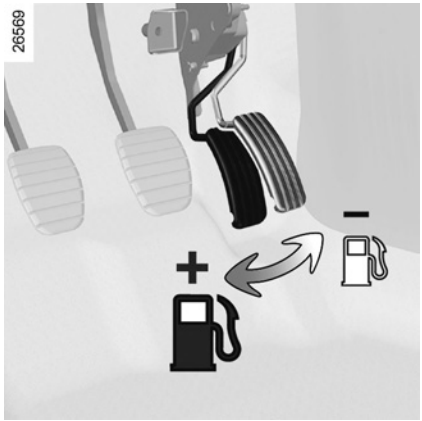

Driving

– Drive carefully for the first few miles until the engine reaches its normal operating temperature, rather than let it warm up while the vehicle is stationary.

– Speed is expensive.

– Sporty driving uses a lot of fuel: drive with a light right foot.

– Brake as little as possible. If you anticipate an obstacle or bend in advance, you may then simply release the accelerator pedal.

– Avoid sudden acceleration.

– Do not overrev the engine in the intermediate gears.
Always use the highest gear possible without labouring the engine.
On versions with an automatic gearbox, it is preferable to keep the gear lever in position **D**.

– Do not try to maintain the same speed up a hill, accelerate no more than you would on the level. Keep your foot in the same position on the accelerator pedal.

– Double declutching and accelerating before switching off are unnecessary in modern vehicles.

– Bad weather, flooded roads:

Do not drive through floods if the water is above the lower edge of the wheel rims.

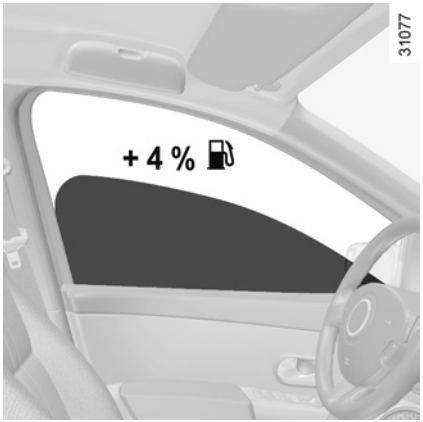

Advice on use

– Electricity is fuel; switch off all the electrical components which are not really needed. **However** (safety first), keep your lights on when the visibility is bad (“see and be seen”).

– Use the air vents. Driving with the windows open at 60 mph (100 km/h) will increase fuel consumption by 4%.

– **In vehicles fitted with air conditioning,** it is normal to observe an increase in fuel consumption (especially in urban conditions) when it is used. For vehicles fitted with manual air conditioning, switch off the system when it is not required.

Advice for reducing consumption and therefore helping to preserve the environment:

If the vehicle has been parked in the sun, open the doors for a few moments to let the hot air escape before starting the engine.

– Never fill the fuel tank right to the brim to avoid overflow.

– Do not leave an empty roof rack fitted to the vehicle.

– It is better to fit a trailer for bulky objects.

– When towing a caravan, fit a wind deflector and adjust it carefully.

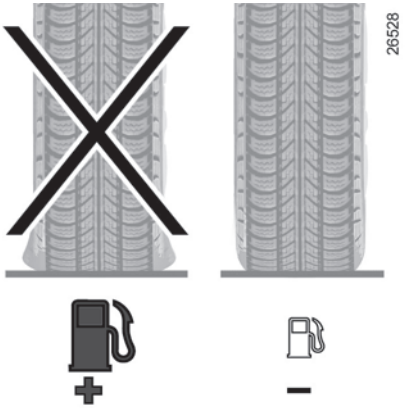

– Avoid using the car for door-to-door calls (short journeys with long waits in between) because the engine never reaches its normal operating temperature.

Tyres

– An underinflated tyre increases fuel consumption.

– The use of non-recommended tyres can increase fuel consumption.

ENVIRONMENT

Your vehicle has been designed with respect for the **environment** in mind for its entire service life: during production, use and at the end of its life.

This commitment is illustrated by the Renault eco² group signature.

31016

Manufacture

Your vehicle has been manufactured at an industrial site which uses a progress policy to reduce environmental impacts on rivers and natural areas (reduction of water and energy consumption, visual and noise pollution, atmospheric emissions and waste water, sorting and reusing waste).

Emissions

Your vehicle has been designed to emit fewer greenhouse gases (CO2) while in use, and therefore to consume less fuel (eg. 140 g/km, equivalent to 5.3 l/100 km for a diesel vehicle).
Our vehicles are also equipped with a particle filter system including a catalytic converter, an oxygen sensor and an active carbon filter (the latter prevents vapour from the fuel tank being released into the open air).

Please make your own contribution towards protecting the environment too.

– Worn parts replaced in the course of routine vehicle maintenance (vehicle battery, oil filter, air filter, batteries, etc.) and oil containers (empty or filled with used oil) must be disposed of through specialist organisations.

– At the end of the vehicle's service life, it should be sent to approved centres to ensure that it is recycled.

– In all cases, comply with local legislation.

Recycling

Your vehicle is 85% recyclable and 95% recoverable.

To achieve these objectives, many of the vehicle components have been designed to enable them to be recycled. The materials and structures have been carefully designed to allow these components to be easily removed and reprocessed by specialist companies.

In order to preserve raw material resources, this vehicle incorporates numerous parts made from recycled plastics or renewable materials (vegetable or animal-derived materials such as cotton or wool).

TYRE PRESSURE MONITOR (1/3)

If the vehicle is equipped with the function, this system monitors the tyre pressure.

Operating principle

Each wheel (except for the emergency spare wheel) has a sensor in the inflation valve which periodically measures the tyre pressure.

The system informs the driver via the display ***1*** and trip computer and warning system ***2*** that the tyres are sufficiently inflated and warns if they are underinflated or leaking.

This function is an additional driving aid.

However, the function does not take the place of the driver. It cannot, therefore, under any circumstances replace the vigilance or the responsibility of the driver.

Check the tyre pressures, including the emergency spare wheel, once a month.

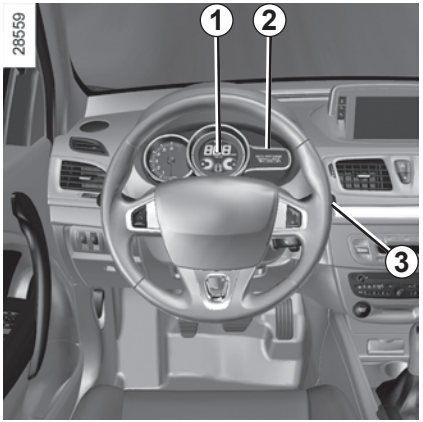

This system monitors the tyre pressure. Depending on the vehicle, the information is displayed on the instrument panel. In this case, they appear:

– with the ignition on, when scrolling through the trip computer and warning system information by pressing control ***3*** (refer to the information on the “trip computer and warning system” in Section 1);

– or if there is a fault when driving (refer to the following pages to find out more about the warning messages).

The tyre pressure can be adjusted when cold (refer to the information on “Tyre pressures”).

If tyre pressures cannot be checked when the tyres are **cold**, the recommended pressures must be increased by **0.2** to **0.3** bar (**3** PSI).

Never deflate a hot tyre.

Changing a wheel

If you wish to change your wheels (fitting winter tyres etc.), the system will reset itself automatically after approximately two minutes driving at a minimum speed of 12 mph (20 km/h).

Changing a wheel

The system may take several minutes depending on use for the new wheel positions and pressures to be recognised; check the tyre pressures after all operations.

Display

Display ***1*** on the instrument panel and trip computer and warning system ***2*** informs you of any tyre pressure faults (flat tyre, punctured tyre, system fault, etc.).

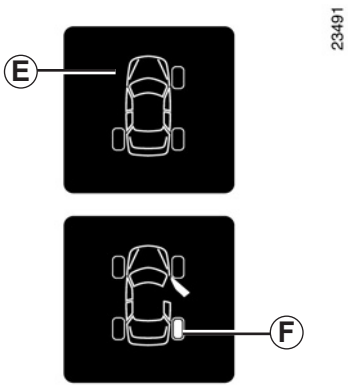

“Adjust tyre pressure”

A shaded wheel ***F*** indicates a deflated tyre.

“Inflate tyres for motorway”

All four wheels ***F*** become full, the tyre pressure is not adapted to the driving speed. Slow down or inflate all **four** tyres to “motorway pressure” (refer to the label located on the label on the edge of the driver’s door).

“Puncture”

Wheel ***F*** indicates that the wheel concerned is punctured or severely underinflated. Replace it or contact an approved dealer if it is punctured. Top up the tyre pressure if the wheel is deflated,

This message appears along with the STOP warning light.

“Tyre pressure sensors absent” or “Check tyre pressure sensors”

One wheel ***E*** disappears, indicating that the sensor on this wheel is missing or faulty (e.g. if the emergency spare wheel is fitted).

Emergency spare wheel

If the vehicle is equipped with an emergency spare wheel, it will not have a sensor. When it is fitted to the vehicle, the message “Tyre pressure sensors absent” is displayed on the instrument panel.

Replacing wheels/tyres

This system requires specific equipment (wheels, tyres, sensors, etc.).

Contact an approved dealer to replace the tyres and to find out about available accessories compatible with the system: the use of any other accessory could affect the correct operation of the system or damage a sensor.

Tyre repair product and inflation kit

Because the valves are specially designed, only use equipment approved by the approved network.

Depending on the vehicle, this is composed of:

- **the ABS (anti-lock braking system);**
- **the electronic stability program (E.S.P.) with understeer control and traction control (A.S.R.);**
- **emergency brake assist with, depending on the vehicle, braking anticipation.**

These functions are an additional aid in the event of critical driving conditions, enabling the vehicle behaviour to be adapted to suit the driving conditions.

However, the functions do not take the place of the driver. **They do not increase the vehicle's limits and should not encourage you to drive more quickly.** Therefore, they can under no circumstances replace the vigilance or responsibility of the driver when manoeuvring the vehicle (the driver must always be ready for sudden incidents which may occur when driving).

ABS (anti-lock braking system)

Under heavy braking, the ABS prevents the wheels from locking, allowing the stopping distance to be managed and keeping control of the vehicle.

Under these circumstances, the vehicle can be steered to avoid an obstacle whilst braking. In addition, this system can increase stopping distances, particularly on roads with low surface grip (wet ground etc.).

You will feel a pulsation through the brake pedal each time the system is activated. The ABS does not in any way improve the vehicle's physical performance relating to the road surface and roadholding. It is still **essential** to follow the rules of good driving practice (such as driving at a safe distance from the vehicle in front etc.).

In an emergency, apply **firm and continuous pressure** to the brake pedal. There is no need to pump it repeatedly. The ABS will modulate the force applied in the braking system.

Operating faults:

- and lit up on the instrument panel along with the messages "Check ABS", "Check braking system" and "Check ESP": the ABS, E.S.P. and emergency brake assist are deactivated. **Braking safety is still guaranteed**;
- , , and STOP lit on the instrument panel accompanied by the message "Braking system fault": **this indicates a fault with the braking system.**

In both cases, consult an approved Dealer.

Your braking systems are partially operational. However, it is **dangerous to brake suddenly** and it is essential to stop immediately, as soon as traffic conditions allow. Contact an approved dealer.

Electronic stability program (E.S.P.) with understeer control and traction control (A.S.R.)

Electronic stability program (E.S.P.)

This system helps you to keep control of the vehicle in critical driving conditions (avoiding an obstacle, loss of grip on a bend, etc.).

Operating principle
A sensor in the steering wheel detects the direction selected by the driver.

Other sensors throughout the vehicle measure the actual direction.

The system compares driver input to the actual trajectory of the vehicle and corrects the trajectory if necessary by controlling the braking of certain wheels and/or engine power. In the event that the system is engaged, indicator light flashes on the instrument panel.

Understeer control

This system optimises the action of the E.S.P. in the case of pronounced understeering (loss of front axle road holding).

Traction control (A.S.R.)

This system helps to limit wheelspin of the drive wheels and to control the vehicle when pulling away accelerating or decelerating.

Operating principle
Using the wheel sensors, the system measures and compares the speed of the drive wheels at all times and slows down their over-rotation. If a wheel is starting to slip, the system brakes automatically until the drive supplied becomes compatible with the level of grip under the wheel again.

The system also adjusts the engine speed to the grip available under the wheels, independently of the pressure exerted on the accelerator pedal.

Operating faults

When the system detects an operating fault the message “Check ESP” and the indicator light appears on the instrument panel. In this case, the E.S.P. and A.S.R. are deactivated.

Consult an approved dealer.

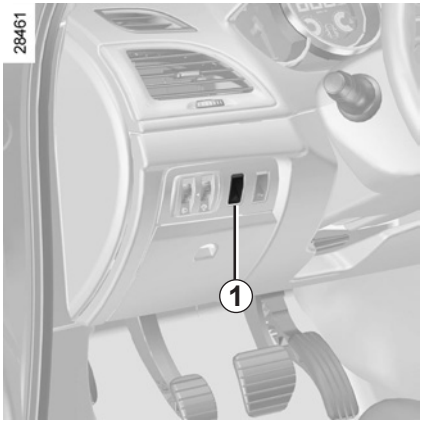

Disabling the A.S.R. function

In some situations (driving on very wet ground: snow, mud, etc. or driving with snow chains fitted), the system may reduce the engine output to limit wheelspin. If this is not required, it is possible to deactivate the function by pressing switch ***1***.

The message “Traction control off” is displayed on the instrument panel to inform you.

Traction control (A.S.R.) offers additional safety; it is recommended that you do not drive with the function disabled. Correct this as soon as possible by pressing switch ***1*** again.

Note: the function is reactivated automatically when the ignition is switched on or when a speed of approximately 24 mph (40 km/h) is exceeded.

Emergency brake assist

This system supplements the ABS and helps reduce vehicle stopping distances.

Operating principle

The system is for detecting an emergency braking situation. In this case, the braking assistance immediately develops maximum power and may trigger ABS regulation.

ABS braking is maintained as long as the brake pedal is applied.

Hazard warning lights switching on
Depending on the vehicle, these may light up in the event of sudden deceleration.

Operating faults
When the system detects an operating fault the message “Check braking system” appears on the instrument panel along with the warning light.

Consult an approved dealer.

Braking anticipation
Depending on the vehicle, when you rapidly release the accelerator, the system anticipates the braking manoeuvre in order to reduce stopping distances.

Special cases
When using the cruise control:
– if you use the accelerator, when you release it, the system may be triggered;
– if you do not use the accelerator, the system will not be triggered.

Hill start assistance

This function assists the driver when starting on hills. It prevents the vehicle from rolling backwards, depending on the slope, by automatically applying the brakes when the driver lifts his/her foot off the brake pedal to depress the accelerator pedal.

System operation

It only operates when the gear lever is in a position other than neutral (other than **N** or **P** for automatic transmissions) and the vehicle is completely stationary (brake pedal depressed)

The system holds the vehicle for approximately **2 seconds**. The brakes are then gradually released (the vehicle will move according to the slope).

The hill start assistance system cannot completely prevent the vehicle from rolling backwards in all situations (extremely steep gradients, etc.).

In all cases, the driver may depress the brake pedal to prevent the vehicle from rolling backwards.

The hill start assistance function should not be used for prolonged stops: use the brake pedal.

This function is not designed to immobilise the vehicle permanently.

If necessary, use the brake pedal to stop the vehicle.

The driver must remain particularly vigilant when driving on slippery or low-grip surfaces and/or on hills.

Risk of serious injury.

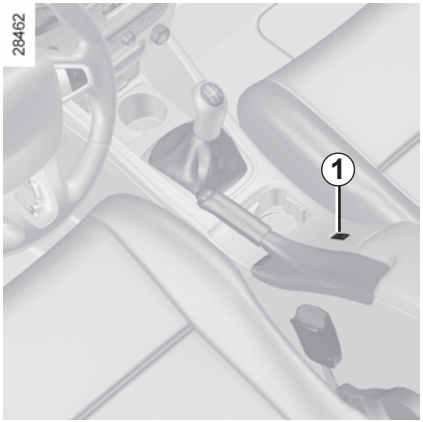

The speed limiter function helps you stay within the driving speed limit that you choose, known as the **limit speed**.

Controls

1 Main “On/Off” switch.

2 Limit speed activation, storage and increase switch (+).

3 Decrease limit speed (-).

4 Switch the function to standby (with memorisation of the limit speed) (O).

5 Activation and recall of stored limit speed (R).

Switching on

Press switch ***1*** on the side showing . Indicator light ***7*** comes on, lit orange, and the message “Speed limiter” appears on the instrument panel, accompanied by dashes in zone ***6*** to indicate that the speed limiter function is activated and waiting to store a limit speed. To store the current speed, press switch ***2*** (+): The limited speed will appear in zone ***6***. The minimum stored speed is 20 mph (30 km/h).

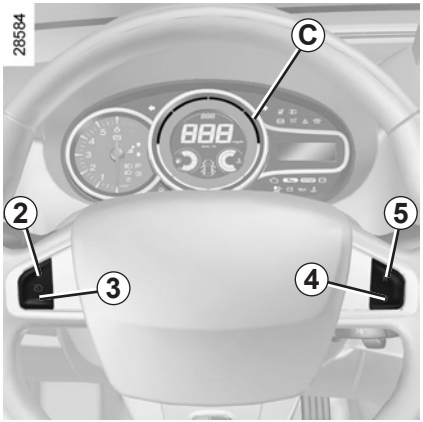

Driving

When a limited speed has been stored and this speed is not reached, driving is similar to driving a vehicle without the speed limiter function.

Once you have reached the stored speed, no effort on the accelerator pedal will allow you to exceed the programmed speed except in an emergency (refer to information on “Exceeding the limit speed”).

Varying the limit speed

The limit speed may be changed by repeatedly pressing:

– switch ***2*** (+) to increase the speed;

– switch ***3*** (-) to decrease the speed.

The speed limiter function is in no way linked to the braking system.

Exceeding the limit speed

It is possible to exceed the limit speed at any moment. To do this: press the accelerator pedal **firmly and fully** (beyond the kickdown point).

While the speed is being exceeded, the limit speed flashes on the instrument panel and area ***C*** lights up red.

Then, as far as is possible, release the accelerator pedal: the speed limiter function will return as soon as you reach a speed lower than the stored speed.

Limited speed cannot be maintained

If driving up or down a steep gradient, the system is unable to maintain the limit speed: the stored speed on the instrument panel will flash and zone ***C*** will light up in red to inform you of this situation.

Putting the function on standby

The speed limiter function is suspended when you press switch ***4*** (O). In this case, the limit speed will remain stored and is no longer displayed in zone ***6*** and the message “Memorised” along with the stored speed will appear on the display.

Recalling the limit speed

If a speed has been stored, it can be recalled by pressing switch ***5*** (R).

When the speed limiter is put on standby, pressing switch ***2*** (+) reactivates the function without taking into account the stored speed: it is the speed at which the vehicle is moving that is taken into account.

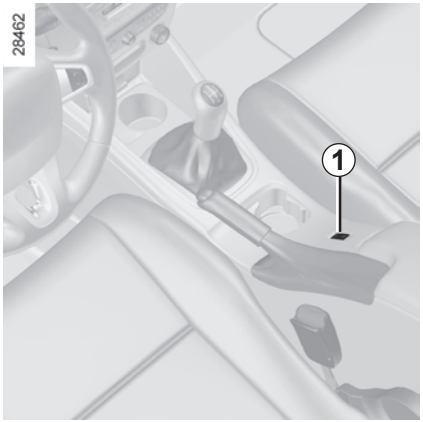

Switching off the function

The speed limiter function is deactivated if you press switch ***1***: in this case a speed is no longer stored. The instrument panel orange indicator light ***7*** goes out to confirm that the function is deactivated.

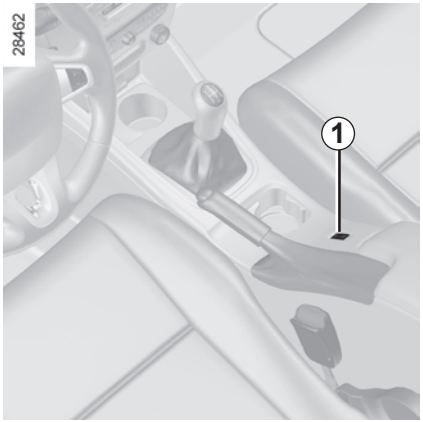

The cruise control function helps you to maintain your driving speed at a speed that you choose, called the **cruising speed.**

This cruising speed may be set at any speed above 20 mph (30 km/h).

The cruise control function is in no way linked to the braking system.

This function is an additional driving aid. However, the function does not take the place of the driver. Therefore, it can under no circumstances replace the driver's responsibility to respect speed limits and to be vigilant (the driver must always be ready to brake). Cruise control must not be used in heavy traffic, on undulating or slippery roads (black ice, aquaplaning, gravel) and during bad weather (fog, rain, side winds etc.).

There is a risk of accidents.

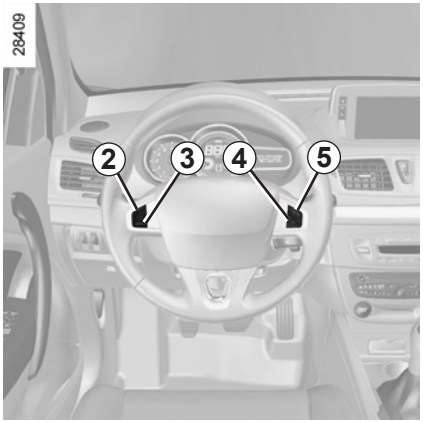

Controls

1. Main "On/Off" switch.
2. Limit speed activation, storage and increase switch (+).
3. Decrease cruising speed (-).
4. Switch the function to standby (with memorisation of the governed cruising speed) (O).
5. Activation with recall of stored governed cruising speed (R).

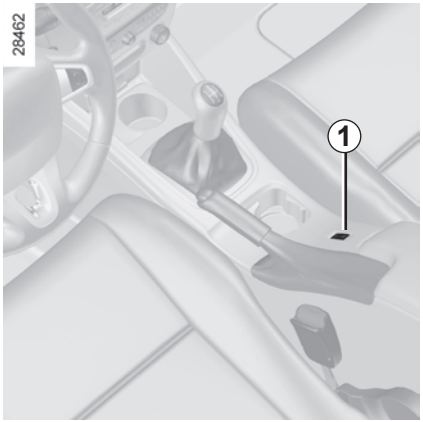

Switching on

Press switch ***1*** on the side showing .

Indicator light ***7*** comes on, lit green, and the message “Cruise control” appears on the instrument panel and dashes appear in zone ***6*** to indicate that the cruise control function is activated and waiting to store a cruising speed.

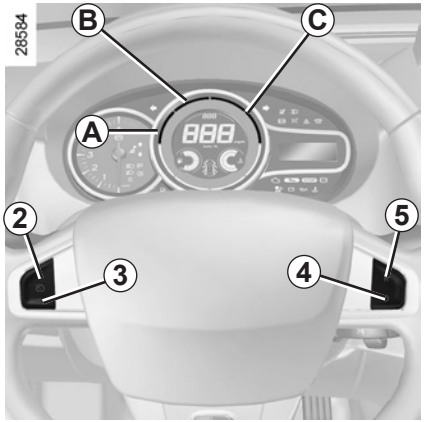

Activating cruise control

At a steady speed (above 20 mph (30 km/h) approximately) press switch ***2*** (+): the speed is stored. The cruising speed will appear in zone ***6***.

Cruise control activation is confirmed when area ***A*** lights up green in addition to indicator light ***7***. Area ***B*** also lights up green to indicate that the cruising speed has been reached.

Driving

Once a cruising speed is stored and the cruise control function is active, you may lift your foot off the accelerator pedal.

Important: you are nevertheless advised to keep your feet close to the pedals in order to react if necessary.

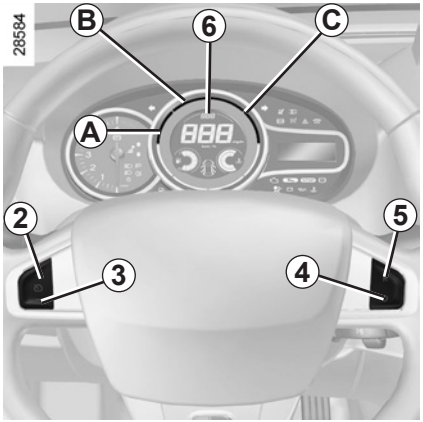

Adjusting the cruising speed

The cruising speed may be changed by pressing the following repeatedly:

– switch ***2*** (+) to increase the speed;

– switch ***3*** (-) to decrease the speed.

The cruise control function is in no way linked to the braking system.

Exceeding the cruising speed

The cruising speed may be exceeded at any time by depressing the accelerator pedal. The cruising speed flashes on the instrument panel along with the illumination of zone ***C*** in red.

Then, release the accelerator: after a few seconds, the vehicle will automatically return to its set cruising speed.

Cruising speed cannot be maintained

If driving up or down a steep gradient, the system is unable to maintain the cruising speed: the stored speed on the instrument panel will flash and zone ***C*** will light up in red to inform you of this situation.

Putting the function on standby

The function is suspended when you:

– press switch ***4*** (O);

– depress the brake pedal;

– depress the clutch pedal or shift into neutral if the vehicle has an automatic gearbox.

In all three cases, the cruising speed remains stored, it is no longer displayed in zone ***6*** and the message “Memorised” along with the stored speed will appear on the instrument panel.

Standby is confirmed when zones ***A***, ***B*** and ***C*** go out.

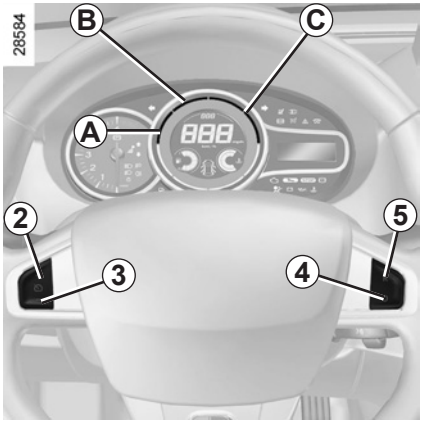

Returning to the cruising speed
If a speed is stored, it can be recalled, once you are sure that the road conditions are suitable (traffic, road surface, weather conditions, etc.).
Press switch ***5*** (R) if the vehicle speed is above 20 mph (30 km/h).

When recalling the stored speed zone ***A*** lights up to confirm activation. Zone ***B*** lights up as soon as the cruising speed is reached.

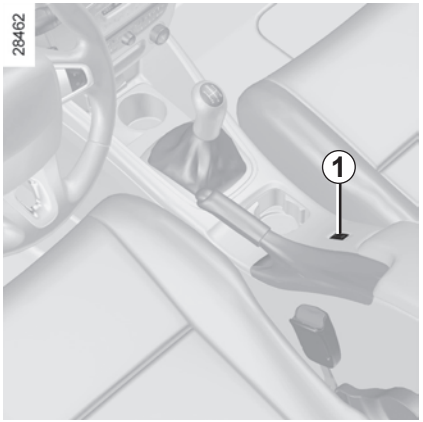

Note: if the speed previously stored is much higher than the current speed, the vehicle will accelerate more rapidly to reach this threshold.

When the cruise control function is put on standby, pressing switch ***2*** (+) reactivates the cruise control function without taking into account the stored speed: it is the speed at which the vehicle is moving that is taken into account.

Switching off the function

The cruise control function is deactivated if you press switch ***1***: in this case a speed is no longer stored. The instrument panel green indicator light ***7*** and zones ***A***, ***B*** and ***C*** go out, confirming that the function is deactivated.

Putting the cruise control on standby or switching it off does not cause a rapid reduction in speed: you must brake by depressing the brake pedal.

Operating principle

Ultrasonic detectors, installed in the front or rear bumper depending on the vehicle, measure the distance between the vehicle and an obstacle whilst reversing.

This measurement is indicated by beeps which become more frequent the closer you come to the obstacle, until they become a continuous beep when the vehicle is approximately 25 centimetres from the obstacle.

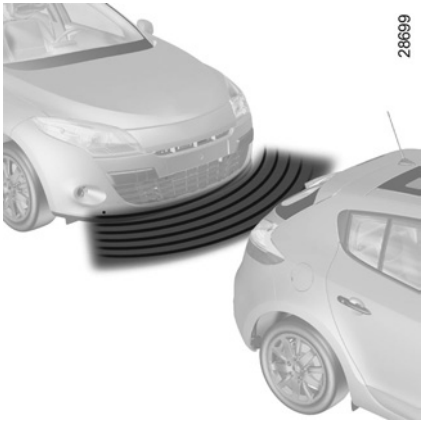

This function is an additional aid that indicates the distance between the vehicle and an obstacle whilst reversing, using sound signals.

Under no circumstances should it replace the driver's care or responsibility whilst reversing.

The driver should always look out for sudden hazards during driving: always ensure that there are no moving obstacles (such as a child, animal, pram or bicycle, etc.) or small, narrow objects such as stones or posts in your path when manoeuvring.

Front parking distance control

(depending on vehicle)

Operation

The parking distance control system is only activated when the vehicle is driven at a speed below approximately 6 mph (10 km/h).

Most objects located less than approximately 60 centimetres away from the front of the vehicle are detected and a beep is emitted.

Automatic activation/deactivation of the front parking distance control

The system deactivates:

– when the electronic parking brake is applied;

– when the vehicle speed is above approximately 6 mph (10 km/h);

– when the vehicle is stationary for more than approximately five seconds and an obstacle is detected (such as when in a traffic jam etc.);

– when the vehicle is in neutral or when the gear lever has been shifted to **N** or **P** for automatic gearboxes;

Rear parking distance control

Operation

When reversing, most objects located less than approximately 1.5 metres away from the rear of the vehicle are detected and a beep is emitted.

If there are obstacles located close to both the front and rear of the vehicle, only the closest of the two will be acknowledged and the corresponding front or rear beep sound will be emitted. If obstacles are detected both to the front and to the rear of the vehicle at the same time, and they are both less than 30 centimetres away from the vehicle, the corresponding front and rear beeps will be emitted alternately.

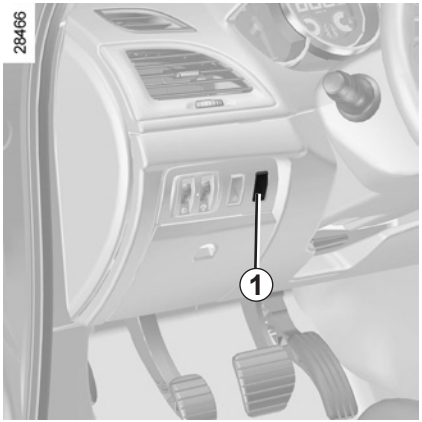

An impact to the underside of the vehicle while manoeuvring (e.g.: striking a post, raised kerb or other street furniture) may result in damage to the vehicle (e.g.: deformation of an axle).

To avoid any risk of accident, have your vehicle checked by an approved Dealer.

Automatic activation/deactivation of the rear parking distance control

The system deactivates:

– when the electronic parking brake is applied;

– when the vehicle speed is above approximately 6 mph (10 km/h);

– when the vehicle is stationary for more than approximately five seconds and an obstacle is detected (such as when in a traffic jam etc.);

– when the vehicle is in neutral or when the gear lever has been shifted to **N** or **P** for automatic gearboxes.

Adjusting the parking distance control volume

From the vehicle settings customisation menu (refer to the information on "Vehicle setting customisation menu" in Section 1), select the line "Parking sensor volume" to adjust the parking distance control volume and confirm by pressing key ***2*** or ***3***.

Temporary deactivation of the system

(depending on the vehicle)

Press switch ***1*** to deactivate the system. The message "Parking sensor off" is displayed to remind you that the system is deactivated.
Pressing the switch again will reactivate the system and switch off the indicator light.
The system will reactivate automatically each time the engine is switched off.

Prolonged deactivation of the system

You may permanently activate or deactivate the front or rear parking distance control separately.
From the vehicle settings customisation menu (refer to the information on the "Vehicle settings customisation menu" in Section 1), select the line "Front parking sensor" or "Rear parking sensor" then activate or deactivate the system:

☐: function deactivated;

☑ function activated.

Special features

Ensure that the ultrasonic sensors are not obscured (by dirt, mud, snow, etc.).

Operating faults

When the system detects an operating fault there will be a 5-second continuous beep as a warning. Consult an approved dealer.

When the vehicle is being driven at a speed below approximately 6 mph (10 km/h), certain noises (motorcycle, lorry, pneumatic drill, etc.) may trigger the beeping sound.

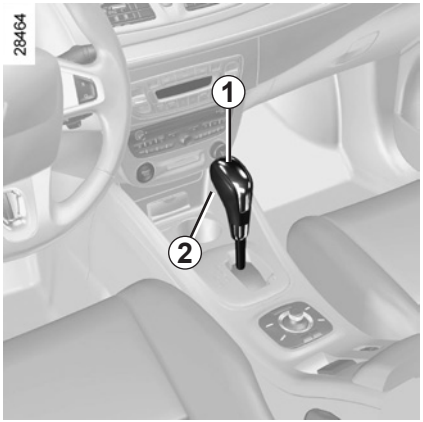

Selector lever *1*

Display ***3*** on the instrument panel shows the mode and gear selected.

***4*:** **P:** park

***5*:** **R:** reverse gear

***6*:** **N:** neutral

***7*:** **D:** automatic mode

8 **:** manual mode

***9*:** zone displaying gearbox mode or gear engaged in manual mode

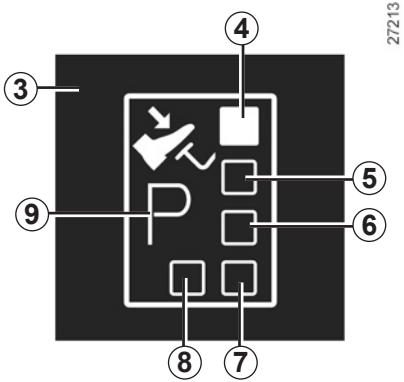

Operation

With the gear lever ***1*** in position **P**, switch on the ignition.

To move out of position **P**, you must depress the brake pedal before pressing unlocking button ***2***.

With the foot on the brake pedal (warning light on the display ***3*** goes out), move the lever out of position **P**.

Only engage D or R when the vehicle is stopped, with your foot on the brake and the accelerator pedal released.

Driving in automatic mode

Select position **D**. In most traffic conditions, you will not have to touch the gear selector lever again: the gears will change automatically at the right time and at the most suitable engine speed because the automatic system takes into account the vehicle load and road contour and adjusts itself to the particular driving style you have chosen.

Economical driving

When driving, always leave the lever in position **D**, keeping the accelerator pedal lightly depressed to ensure automatic gear changes at a lower engine speed.

Accelerating and overtaking

Depress the accelerator pedal firmly and fully (so that it goes beyond the kickdown point).

This will enable you to change down to the optimum gear within the engine range.

Driving in manual mode

With the selector lever in position **D**, move the lever to the left. Shifting the lever repeatedly allows you to change gears manually:

– To move down through the gears, push the lever backwards;

– To move up through the gears, push the lever forwards.

The gear selected is displayed on the instrument panel.

Special cases

In certain driving conditions (e.g.: engine protection, operation of the Electronic Stability Program) the automated system may change the gear automatically.

Likewise, to prevent incorrect manoeuvres, a gear change may be refused by the automatic system: in this case the gear display flashes for a few seconds as a warning.

Special circumstances

– **If the road contours and bends** do not allow you to stay in automatic mode (e.g.: in the mountains), we recommend that you change to manual mode.
This will prevent the automatic gearbox from changing gears repeatedly when climbing, and permit engine braking on long descents.

– **In cold weather,** to prevent the engine from stalling, wait a few moments before shifting the selector lever from position **P** or **N** and engaging **D** or **R**.

In very cold weather, the system may prevent the gears from being shifted in manual mode until the gearbox reaches the right temperature.

Parking the vehicle

When the vehicle is stopped, move the lever to position **P** while keeping your foot on the brake pedal: the gearbox is in neutral and the drive wheels are mechanically locked by the driveshaft.

Apply the handbrake or, depending on the vehicle, ensure that the electronic parking brake is applied.

An impact to the underside of the vehicle while manoeuvring (e.g.: striking a post, raised kerb or other street furniture) may result in damage to the vehicle (e.g.: deformation of an axle).

To avoid any risk of accident, have your vehicle checked by an approved Dealer.

Operating faults

– **When driving**, if the message “Check auto gearbox” appears on the instrument panel, this indicates there is a fault.

  Contact your approved Dealer as soon as possible.

– **When driving**, if the message “Auto gearbox overheating” appears on the instrument panel, stop the vehicle to allow the gearbox to cool down.

  Contact your approved Dealer as soon as possible.

– **If a vehicle with an automatic gearbox breaks down,** refer to the information on “Towing” in Section 5.

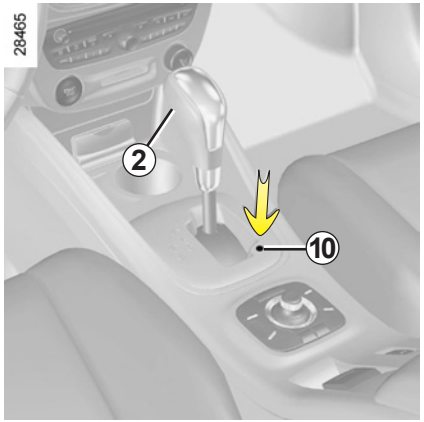

When setting off, if the lever is locked in position **P** even though you are depressing the brake pedal and pressing unlocking button ***2***, the lever can be released manually. To do this, press the button by inserting an object into the hole ***10*** and simultaneously press unlocking button ***2*** located on the lever.

Section 3: Your comfort

Air vents . . . 3.2
Manual air conditioning . . . 3.4
Automatic climate control . . . 3.6
Air conditioning: information and advice on use . . . 3.11
Electric windows/electric panoramic sunroof . . . 3.12
Manual window winders . . . 3.15
Interior lighting . . . 3.15
Sun visor . . . 3.16
Passenger compartment storage/fittings . . . 3.17
Accessories socket . . . 3.21
Ashtray – cigar lighter . . . 3.21
Rear bench seat . . . 3.22
Luggage compartment . . . 3.25
Rear parcel shelf . . . 3.26
Luggage compartment cover: sport tourer versions . . . 3.27
Luggage compartment storage space and fittings . . . 3.29
Transporting objects in the luggage compartment/towing (towing equipment) . . . 3.32
Luggage net . . . 3.33
Roof bars . . . 3.35
Multimedia equipment . . . 3.36

AIR VENTS: air outlets (1/2)

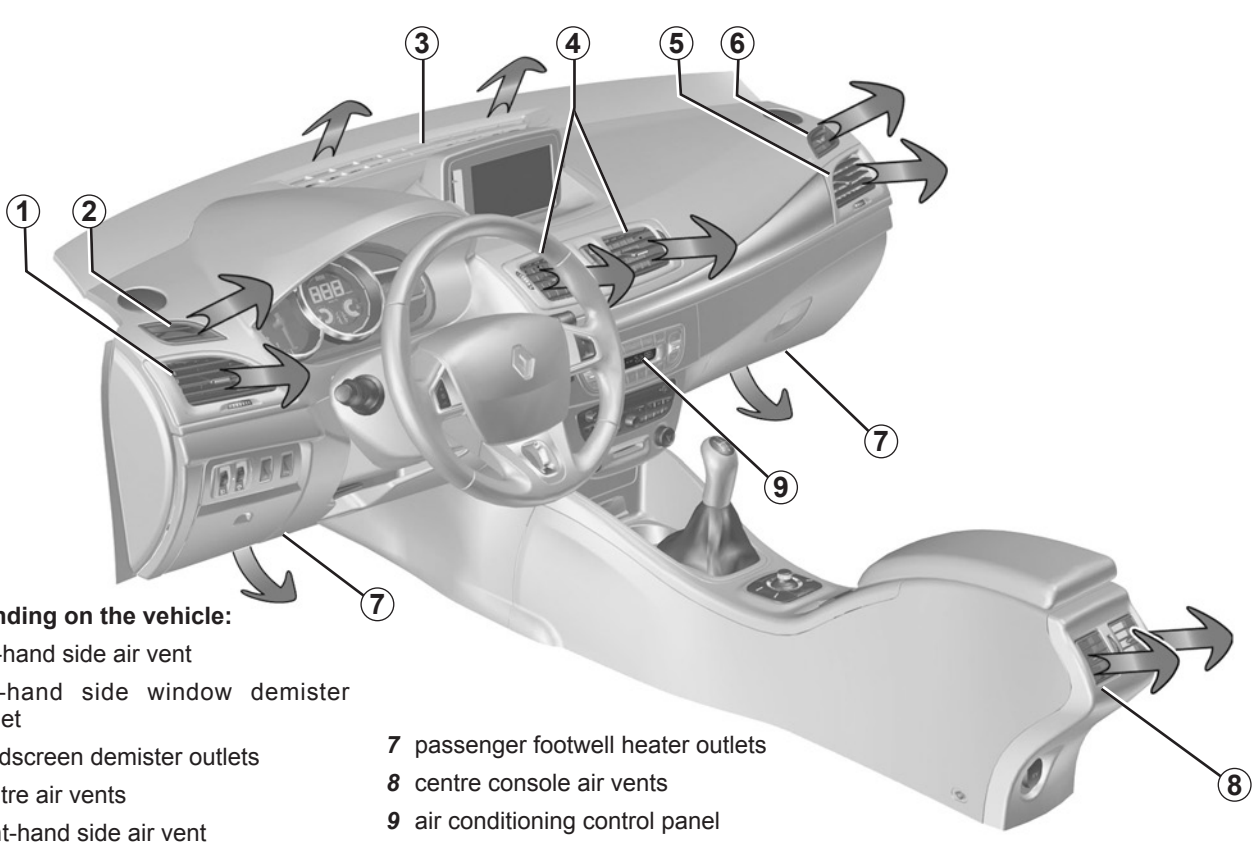

Depending on the vehicle:

1 left-hand side air vent

2 left-hand side window demister outlet

3 windscreen demister outlets

4 centre air vents

5 right-hand side air vent

6 right-hand side window demister outlet

7 passenger footwell heater outlets

8 centre console air vents

9 air conditioning control panel

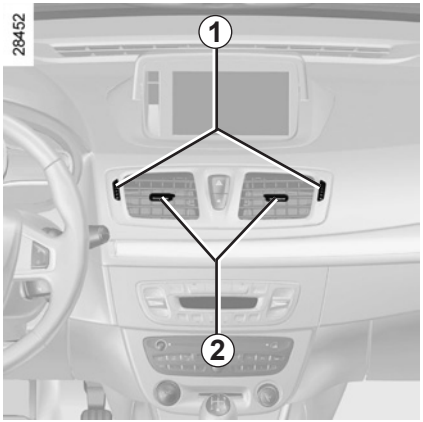

Air flow

Turn control knob ***1*** (beyond the point of resistance).

Up: maximum air flow.

Down: closed.

Turn control knob ***3*** (beyond the point of resistance).

To the right: maximum air flow.

To the left: closed.

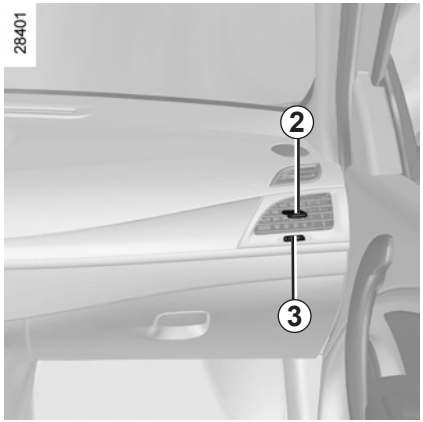

Direction

Right/left: move tabs ***2*** to the right or left.

Up/down: lower or raise tabs ***2***.

Depending on the vehicle, the air vents ***4*** may be replaced by a storage compartment; refer to Section 3 “Passenger compartment storage/ fittings”.

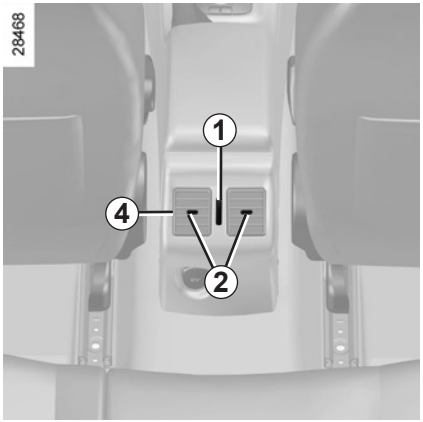

To remove bad odours from your vehicles, only use the systems designed for this purpose. Consult an approved Dealer.

Do not add anything to the vehicle’s ventilation circuit (for example, to remove bad odours).

There is a risk of damage or of fire.

MANUAL AIR CONDITIONING (1/2)

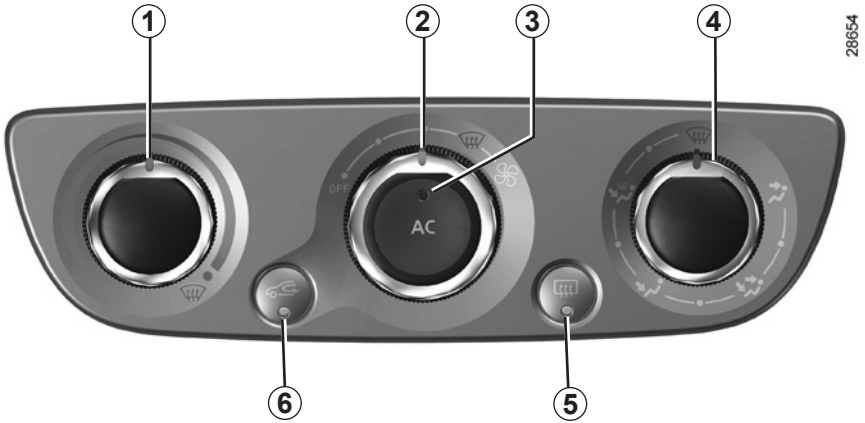

The controls

1 Adjusting the air temperature

2 Adjusting the ventilation speed

3 Air conditioning.

4 Distribution of air in the passenger compartment.

5 De-icing/demisting of the rear screen and, depending on the vehicle, the door mirrors.

6 Air recirculation.

Switching air conditioning on or off

The air conditioning is switched on (indicator light on) or off (indicator light off) using button ***3***.

The air conditioning system is used for:

– lowering the temperature inside the passenger compartment;

– eliminating condensation more quickly.

Distribution of air in the passenger compartment

There are five air distribution options. Turn control ***4*** to choose the distribution option.

The air flow is directed to the windscreen and the front side window demisting vents.

The air flow is distributed between all the air vents, the front side window demisting vents, the windscreen demisting vents and the footwells.

The air flow is directed mainly towards the footwells.

The air flow is directed towards the dashboard vents and the footwells.

All the air flow is directed to the dashboard vents.

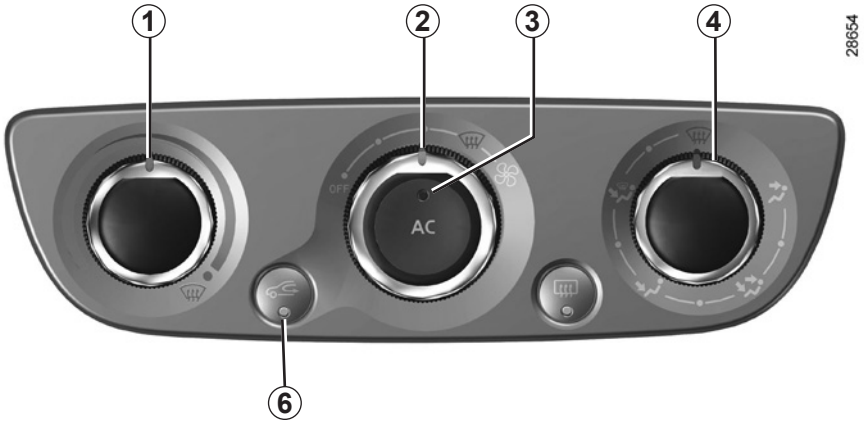

Switching the air recirculation on

Press button ***6***: the integrated indicator light comes on.
Under these conditions, air is taken from the passenger compartment and is recirculated, with no air being taken from outside the vehicle.

Air recirculation is for:

– isolating the vehicle from the external atmosphere (driving in polluted areas, etc.);
– lowering the passenger compartment temperature as quickly as possible.

Adjusting the ventilation speed

Turn control ***2*** clockwise to increase the air flow in the passenger compartment.
The passenger compartment is ventilated by blown air. The blower determines how much air enters but vehicle speed has a slight effect on this.

"OFF" position:
the system is deactivated: the ventilation speed for the passenger compartment air is zero (vehicle stationary), you can however still feel a slight flow of air when the vehicle is moving.

Recommended demisting option:

Turn controls ***1***, ***2*** and ***4*** to the position.
This is the quickest option for de-icing and demisting the side windows and the windscreen.

Prolonged use of air recirculation can lead to condensation forming on the side windows and windscreen, and discomfort due to the use of non-renewed air in the passenger compartment.
We therefore advise you to return to normal mode (external air) as soon as the air recirculation function is no longer required, by pressing the button ***6*** again.

The de-icing function cannot be used with the air recirculation mode to avoid any risk of condensation forming on the windscreen and triggers the air conditioning and the integrated indicator light ***3*** to come on.

The controls

1 and ***6*** Air temperature.

2, ***3*** and ***4*** Automatic programmes.

5 Distribution of air in the passenger compartment.

7 Off button.

8 Air conditioning.

9 De-icing/demisting of the rear screen and, depending on the vehicle, the door mirrors.

10 “Clear View” function.

11 Air recirculation.

12 Ventilation speed.

13 Display.

Automatic mode

The automatic climate control system guarantees comfort in the passenger compartment and good visibility (except in the event of extreme conditions), whilst optimising consumption. The system controls the ventilation speed, air distribution, air recirculation, and starting and stopping the air conditioning and air temperature. This mode consists of a choice of three programmes:

AUTO: allows the selected comfort level to be best attained, depending on the exterior conditions. Press button ***3***.

SOFT: gently brings the temperature to the desired comfort level. The comfort level is then maintained gently and silently. Press button ***2***.

FAST: increases the operation of the system to reach the desired comfort level more quickly. Use this programme when you have passengers in the rear. Press button ***4***.

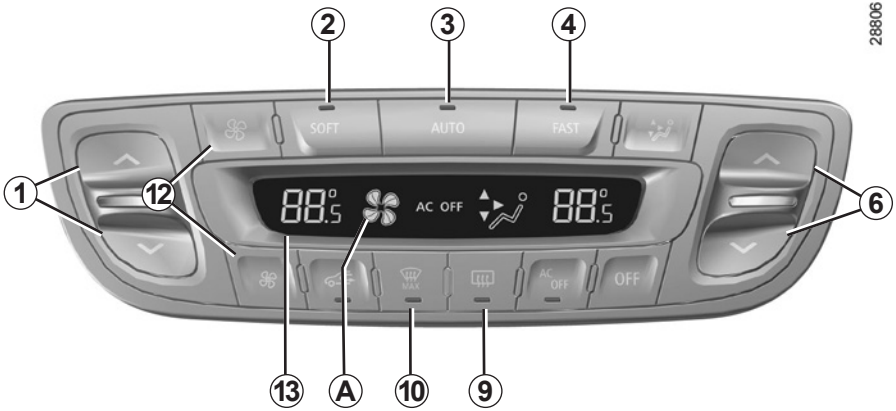

Varying the ventilation speed

In automatic mode, the system uses the most suitable amount of air to reach and maintain the desired comfort level.

You can still adjust the ventilation speed by pressing buttons ***12*** to increase or reduce the ventilation speed.

In this case, the ventilation speed, which is no longer controlled automatically, appears in zone ***A*** on the display ***13***.

Temperature adjustment

Press one of the buttons ***1*** or ***6*** to increase or reduce the temperature on the left-hand side ***1*** or right-hand side ***6***. Pressing button ***3*** for more than 2 seconds sets the passenger temperature to the driver's temperature.

Special note: the highest and lowest settings allow the system to produce maximum hot or cold temperature levels ("LO" and "HI" on display ***13***).

Clear View function

Press button ***10***: the integrated indicator light comes on.

This function quickly demists and de-ices the windscreen, the rear screen, the front side windows, and the door mirrors (depending on the vehicle). The air conditioning and rear screen de-icing functions must be activated.

Press button ***9*** to stop the heated rear screen operating; the integrated indicator goes out.

You can change the ventilation speed by pressing button ***12***.

To exit this function, press:

– button ***10*** again,

– one of either button ***2***, ***3*** or ***4***.

Some buttons have an operating tell-tale which indicates the operating status.

28806

Switching air conditioning on or off

In automatic mode, the system switches the air conditioning system on or off, depending on the climate conditions.

Press switch ***8*** to switch off the air conditioning; the integrated indicator comes on and “AC OFF” is shown on the display ***13***.

The displayed temperature values show a comfort level.

When starting the engine, increasing or decreasing the value displayed will not allow the comfort level to be reached any more quickly. The system will always optimise the temperature increase or decrease (the ventilation system does not start instantly at maximum speed: it gradually increases). This may take several minutes.

Generally speaking, unless there is a particular reason not to, the dashboard air vents should remain open.

You are recommended to use automatic mode by selecting one of the automatic programmes AUTO, SOFT or FAST.

In automatic mode (indicator light for button ***3*** on), all heating and air conditioning functions are controlled by the system.

You can also change the system selection, in this case, indicator light for button ***3*** will go out and the changed function, which is no longer controlled by the system, is shown on display ***13***.

To return to automatic mode, press one of the **AUTO**, **SOFT** or **FAST** programmes**.**

Rear screen de-icing/ demisting

Press button ***9***: the integrated indicator light comes on. This function permits rapid demisting/de-icing of the rear screen and de-icing of the door mirrors (on equipped vehicles).

To exit this function, press button ***9*** again. Demisting automatically stops by default.

Adjusting the distribution of air in the passenger compartment

There are five air distribution options. Press switch ***5*** to scroll through them. The arrows located in area ***B*** on the display ***13*** combine to show you the distribution selected:

The air flow is directed to the windscreen and the front side window demisting vents.

The air flow is distributed between all the air vents, the front side window demisting vents, the windscreen demisting vents and the footwells.

The air flow is directed mainly towards the footwells.

The air flow is directed towards the dashboard vents and the footwells.

All the air flow is directed to the dashboard vents.

In this situation, the distribution of air in the passenger compartment, which is no longer automatically controlled, appears on the display.

Recycling

This function is controlled automatically, but it can also be activated manually.

Note:
- during recirculation, air is taken from the passenger compartment and is recycled, with no air being taken from outside the vehicle;
- air recirculation allows the external atmosphere to be cut off (when driving in polluted areas, etc.);
- lowering the passenger compartment temperature as quickly as possible.

The demisting/de-icing will still take priority over the air recirculation.

Manual use

Pressing button ***11*** allows air recirculation to be forced, **in this case, the integrated indicator comes on**.

Prolonged use of this position may lead to odours, caused by non-renewal of air, and the formation of condensation on the windows.

We therefore advise you to return to automatic mode as soon as the air recirculation function is no longer required, by pressing button ***11*** again.

Stopping the system

Press button ***7*** to switch off the system; in this case “OFF” is shown on the display ***13***. To switch the system on, press one of the ***2***, ***3*** or ***4*** switches.

Advice on use

In some situations, (air conditioning off, air recirculation activated, ventilation speed at zero or low, etc.) you may notice that condensation starts to form on the windows and windscreen.

If there is condensation, use the **"Clear View"** function to remove it, then use the air conditioning in automatic mode to stop it forming again. If the condensation does not clear, use the FAST programme.

Note

Presence of water under the vehicle. After prolonged use of the air conditioning system, it is normal for water to be present under the vehicle. This is caused by condensation.

Fuel consumption

You will normally notice an increase in fuel consumption (especially when driving in town) when the air conditioning is operating.

For vehicles fitted with manual air conditioning, switch off the system when it is not required.

Advice for reducing consumption and therefore helping to preserve the environment:

Drive with the air vents open and the windows closed.

If the vehicle has been parked in the sun, open the doors for a few moments to let the hot air escape before starting the engine.

Maintenance

Refer to the Maintenance Service Booklet for your vehicle for the inspection frequency.

Operating faults

As a general rule, contact your approved Dealer in the event of an operating fault:

- **reduction in de-icing, demisting or air conditioning performance.** This may be caused by the passenger compartment filter cartridge becoming clogged;
- **no cold air is being produced.** Check that the controls are set correctly and that the fuses are sound. Otherwise, switch off the system.

Do not open the refrigerant fluid circuit. The fluid may damage eyes or skin.

These systems operate with the ignition on or off, until one of the front doors is opened (limited to about 3 minutes).

Safety of rear occupants
The driver can disable operation of the electric windows and, depending on the vehicle, the rear doors, by pressing switch ***4***. The indicator light integrated in the switch lights up to confirm that the locks have been activated.
Driver's responsibility
Never leave your vehicle with the RENAULT card inside and never leave a child (or a pet) unsupervised, even for a short while. They may pose a risk to themselves or to others by starting the engine, activating equipment such as the electric windows or by locking the doors.
If any part of the body becomes trapped, reverse the direction of the window immediately by pressing the relevant switch.
Risk of serious injury.

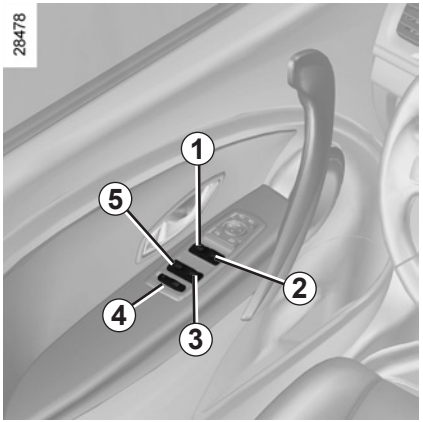

Electric windows

Press or pull the switch to raise or lower a window to the desired height (the rear windows do not open fully);

One-touch mode
This mode works in addition to the operation of the electric windows described previously. It either operates on the front windows only, or on all the windows.
Briefly press or pull the window switch fully: the window is fully lowered or raised. Pressing the switch again stops the window moving.

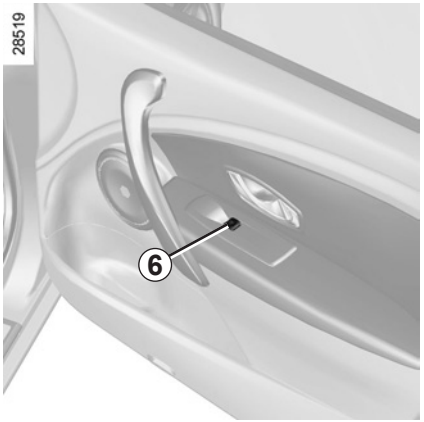

From the driver's seat, use switch:
- ***1*** for the driver's side;
- ***2*** for the front passenger side;
- ***3*** and ***5*** for the rear passenger windows.

From the passenger seats, use switch ***6***.
Note: if the window detects resistance when closing (e.g.: fingers, branch of a tree, etc.) it stops and then lowers again by a few centimetres.

Avoid resting any objects against a half-open window: there is a risk that the electric window could be damaged.

Sun blind

– **to open:** push handle ***7*** upwards and guide the blind as it retracts;

– **to close:** pull handle ***7*** until it clicks into the catch.

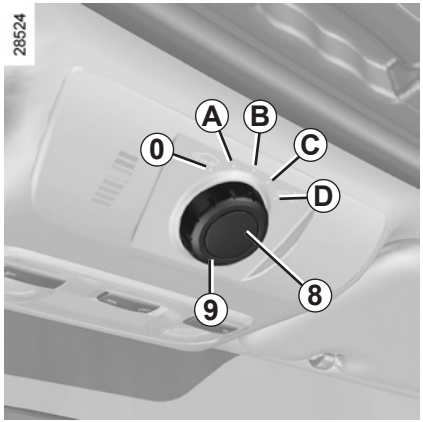

Sunroof

– **Open the sun blind**

– **To open slightly:** turn button ***9*** to position ***A***;

– **To open fully:** turn button ***9*** to position ***B***, ***C*** or ***D***, depending on the opening position required;

– **To close:** turn button ***9*** to position ***0***.

Special note

Your vehicle is equipped with an anti-pinch facility: when the sunroof encounters resistance whilst closing, (somebody's fingers, etc.) it stops and then moves back several centimetres.

Driver's responsibility

Never leave your vehicle with the RENAULT card inside and never leave a child (or a pet) unsupervised, even for a short while.

The reason for this is that the child may endanger himself or others by starting the engine, activating equipment such as the window winders for example, or locking the doors.

If a body part gets trapped, reverse the direction of travel as soon as possible by turning button ***9*** fully to the right (position ***D***).

Risk of serious injury.

Remote control window closing

(for vehicles with one-touch windows on all windows).

When you lock the doors from the outside, **press the locking button on the RENAULT card twice in quick succession, or on the driver's door** in hands-free mode, and all the windows will close automatically.

It is recommended that the user only operates the system when the vehicle can be seen clearly and no one is inside.

Note: locking the doors using the RENAULT card deactivates hands-free mode.

Closing windows can cause serious injury.

If the vehicle is equipped with this function, this action will activate deadlocking.

Check that there is no-one still inside the vehicle

Operating faults

Electric windows

In case of a fault when closing a window, the system reverts to normal mode: pull the switch concerned up as often as necessary to fully close the window (the window will close gradually), hold the switch (still on the closure side) for three seconds then lower and raise the window fully to reinitialise the system.
If necessary, contact your approved Dealer.

Electric sunroof

If the roof does not close, turn button ***9*** to the position ***0*** and then press button ***8*** until the roof is fully closed: consult an approved Dealer.

Important: during this operation, the sunroof anti-pinch facility is deactivated. Contact your approved dealer as soon as possible.

Precautions during use

- **check** that the sunroof is properly closed before leaving your vehicle;
- **clean** the seal every three months using products recommended by our Technical Department;
- **do not open** the sunroof immediately after the vehicle has been in the rain or after your car has been washed.
- **Vehicle with roof bars**

  As a general rule, if there is a load on the roof, use of the sunroof is not recommended.

  Before using the sunroof, check the objects and/or accessories (bike racks, roof boxes, etc.) attached to the roof bars: they should be properly arranged and secured and should not interfere with the operation of the sunroof.

  Contact your approved Dealer for details of possible conversions.

Manual window winders

Turn handle ***1***.

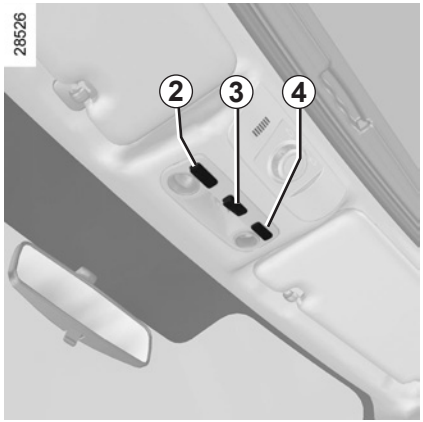

Courtesy light

Tilt switch ***3*** to move it to the position for:

– permanent lighting;

– intermittent lighting, which comes on when a door is opened. This switches off after a time delay, once the doors concerned have been closed correctly;

– immediate switching off.

Map reading lights

(depending on vehicle)

Tilt switches ***2*** or ***4***.

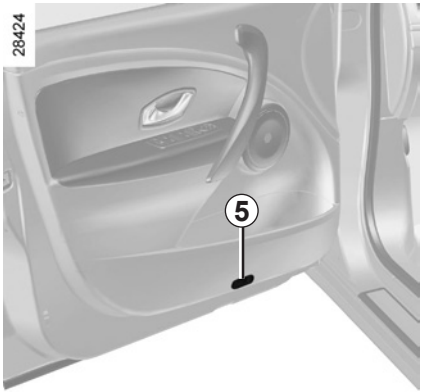

Front door lights

Light ***5*** comes on when the door is opened.

When the doors or luggage compartment are unlocked and opened the courtesy and footwell lights come on temporarily.

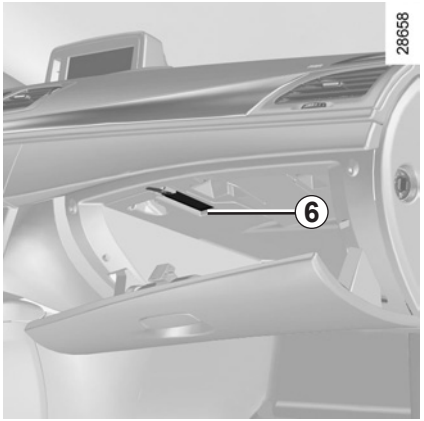

Glove box light *6*

Light ***6*** comes on when the cover is opened.

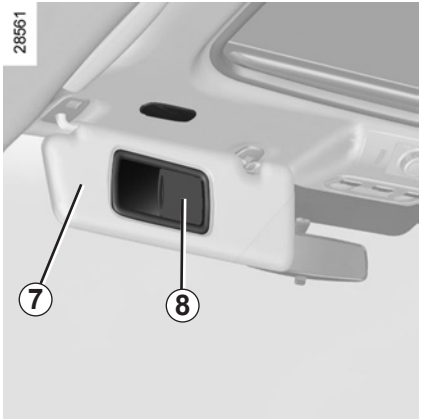

Sun visor

Lower the sun visor ***7*** over the windscreen or unclip it and turn it over the side window.

Courtesy mirrors

Slide cover ***8***, depending on the vehicle, and the mirror is lit.

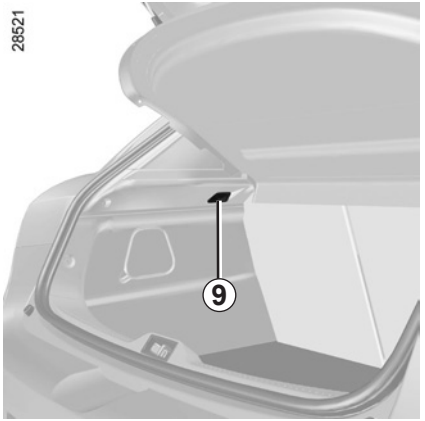

Luggage compartment light *9*

Depending on the vehicle, light ***9***, comes on when the luggage compartment is opened.

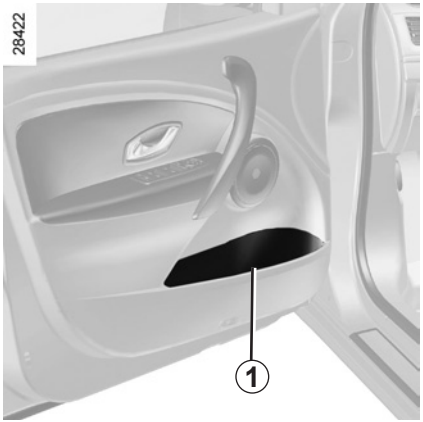

Door pockets *1*

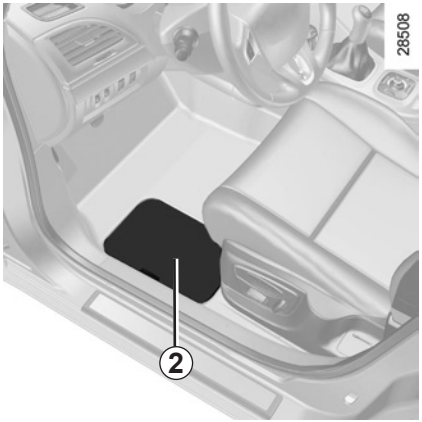

Driver and passenger underfloor storage compartments *2*

This storage compartment can be used to hold the vehicle documentation, etc.

Sun visor storage *3*

This can be used for storing motorway tickets, cards, etc.

Ensure that no hard, heavy or pointed objects are placed in the “open” storage compartments in such a way that they may fall onto passengers during sudden turning, braking or in the event of an accident.

Nothing should be placed on the floor area in front of the driver as such objects may slide under the pedal during braking manoeuvres, thus obstructing its use.

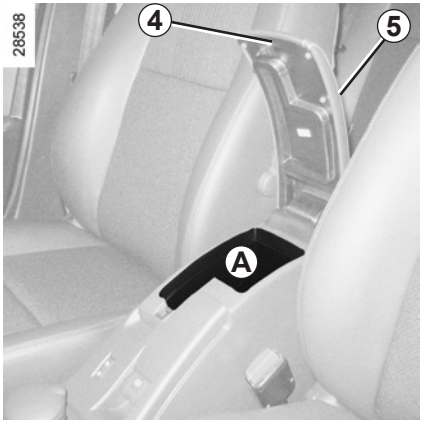

Front centre armrest storage compartment *A*

Press button ***4*** and lift the cover ***5***.

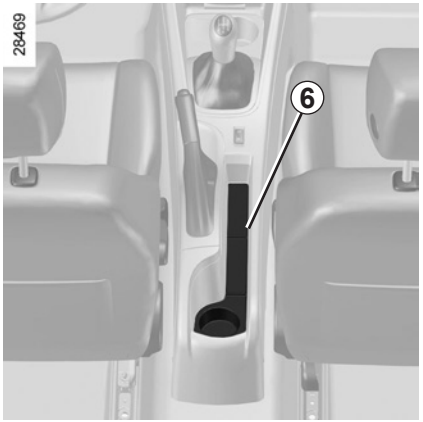

Centre console storage compartments *6*

Ensure that no hard, heavy or pointed objects are placed in the “open” storage compartments in such a way that they may fall onto passengers during sudden turning, braking or in the event of an accident.

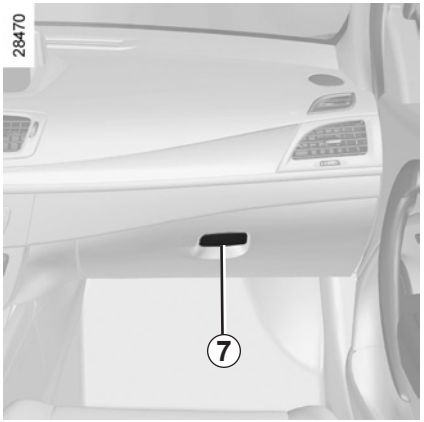

Passenger storage compartment

Pull handle ***7*** to open it.

The glove box can hold A4-size documents, a large bottle of water, etc.

The storage compartment is ventilated and refrigerated.

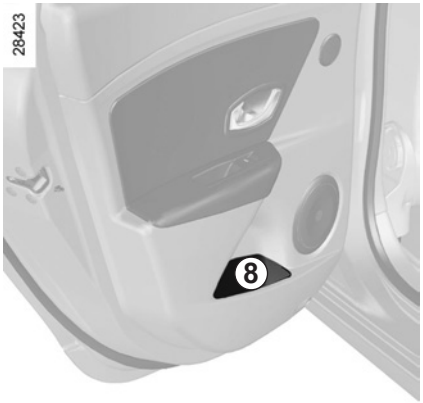

Door pockets *8*

Storage compartment *9*

Rear armrest storage

Lower armrest ***12*** and, depending on the vehicle, lift cover ***11*** using unlocking handle ***10***.

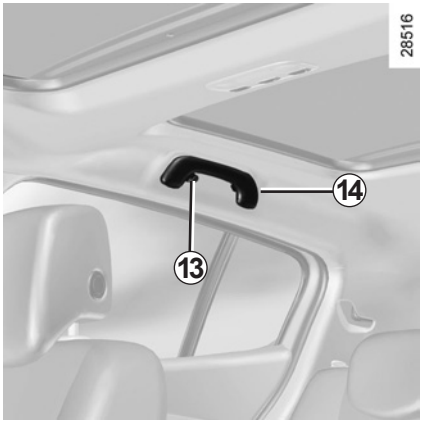

Clothes hooks *13*

Grab handle *14*

This offers support and can be held when the vehicle is being driven.

Do not use it for getting into or out of the vehicle.

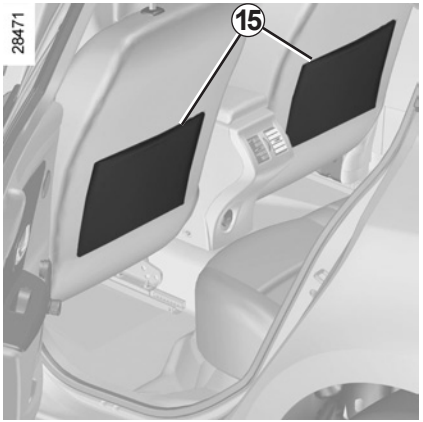

Front seat storage compartments *15*

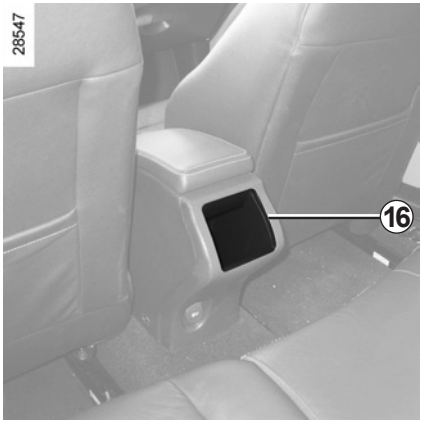

Rear centre console storage compartments *16*

Depending on the vehicle, storage compartment ***16*** may be replaced by air vents; refer to Section 3 “Air vents”.

ASHTRAY, CIGAR LIGHTER, ACCESSORIES SOCKET

Accessories sockets

You may use cigar lighter recess ***1*** or socket ***3*** (depending on the vehicle). They are designed for connecting accessories with a maximum power rating of 120 Watts (voltage: 12V) which have been approved by our Technical Department.

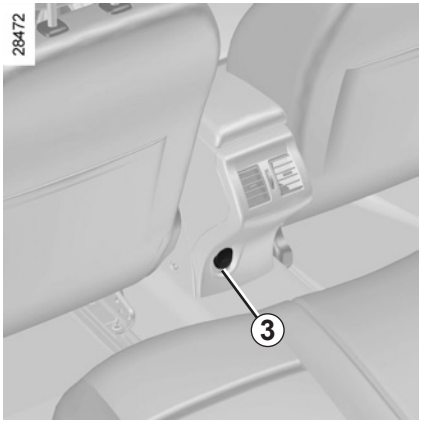

Cigar lighter *1*

With the ignition on, push in cigar lighter ***1***, it will spring back with a click when it is ready. Pull it out to use. After use, replace it without pushing it all the way in.

Ashtray *2*

To open, lift the cover. To empty, pull the ashtray towards you and it will be released from its housing.

Connect accessories with a maximum power of 120 Watts only.

Fire hazard.

If your vehicle is not fitted with a cigar lighter and an ashtray, these can be obtained from an approved Dealer.

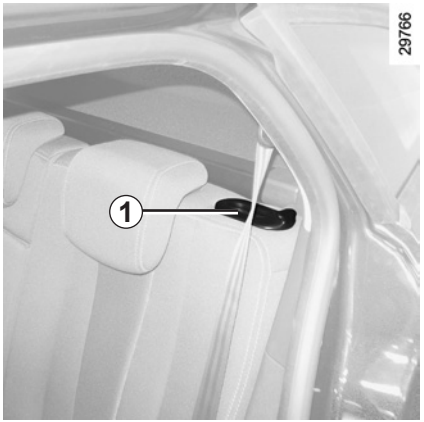

Sport tourer versions

Depending on the vehicle, seatback ***A*** can be folded down on its own to allow long or bulky objects to be transported.

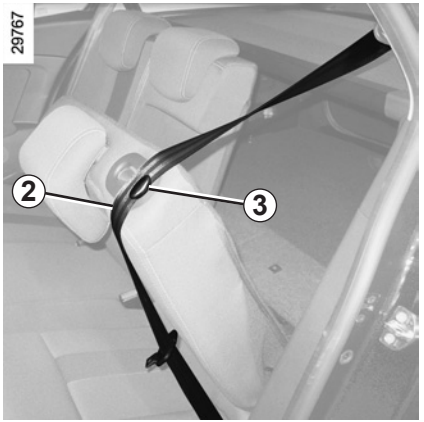

To fold down the seatback

Ensure that the front seats are far enough forward.

Lower the rear headrests (refer to the information on the “Rear headrests” in Section 1).

Place the seat belts ***2*** in their guides ***3***.

Before moving the seat-back, put seat belt ***2*** in belt guide ***3*** to avoid damaging it.

Press button ***1*** and lower the seatback(s) ***A***.

For safety reasons, carry out any adjustments when the vehicle is not being driven.

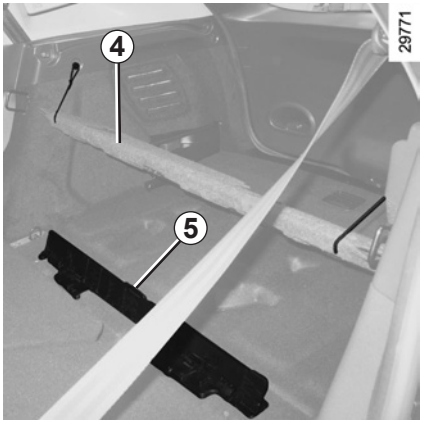

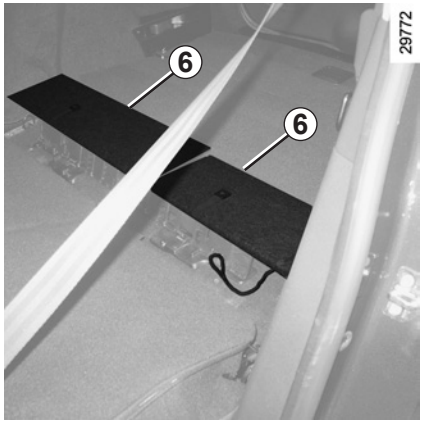

Luggage compartment carpet level adjustment

To adjust the level of the luggage compartment carpet in line with the seatbacks, lift carpet ***4*** via the rear door; height adjuster ***5*** is deployed automatically. Fit the luggage compartment carpet and unfold blanking covers ***6***.

When refitting the bench seat, push the booster seat in at the same time as fitting the luggage compartment carpet.

When refitting the seatback, make sure it is correctly locked in place.
If seat covers are fitted, make sure these do not prevent the seatback latch from locking in.
Make sure that the seat belts are positioned correctly.
Reposition the headrests.

The seat and the seatback may be folded away to allow bulky objects to be carried.

To fold away the seat base

Tilt seat base ***B*** against the front seats.

To fold down the seatback

After folding the seat base down, remove the rear headrests (refer to the section on “rear headrests”) then press button ***1*** and lower the seatback(s) ***C***.

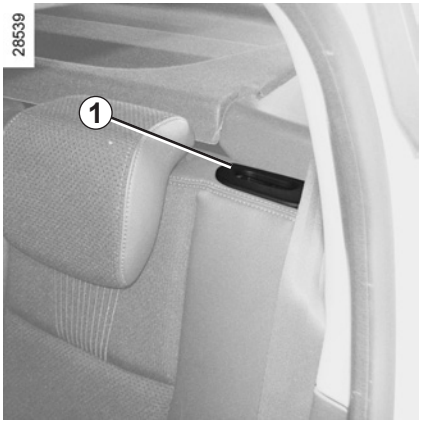

In all situations, remove the rear headrests (refer to the information on the “Rear headrests” in Section 1).

For safety reasons, carry out any adjustments when the vehicle is not being driven.

When moving the rear bench seat, ensure that nothing obstructs the anchorage points (part of the body, a pet, gravel, cloth, toys, etc.).

When refitting the seatback, make sure it is correctly locked in place.
If seat covers are fitted, make sure these do not prevent the seatback latch from locking in.
Make sure that the seat belts are positioned correctly.
Reposition the headrests.

To open

Press button ***1*** and lift the tailgate.

To close

Pull down the tailgate using handle ***2*** inside the tailgate to assist you.

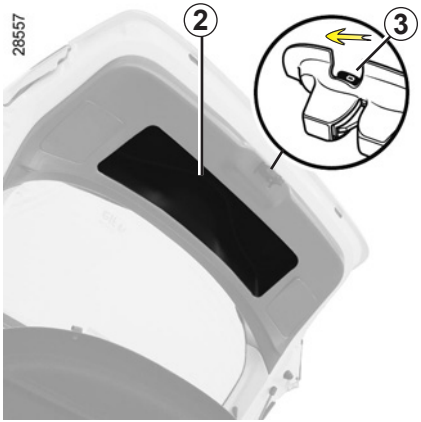

Opening manually from inside the vehicle

Special note:

If it is impossible to unlock the tailgate, it can be done from inside.

– access the luggage compartment by folding forward the seatback(s) of the rear bench seat,

– insert a pencil or similar object in cavity ***3*** and slide the unit as shown in the illustration,

– push the tailgate to open it.

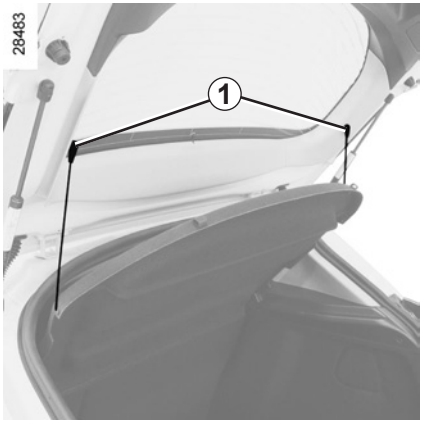

Removal

Unhook the two cords ***1*** (tailgate side).

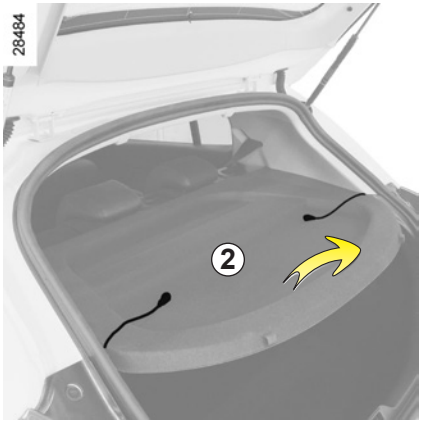

Lift rear parcel shelf ***2*** slightly and pull it towards you.

To refit it, proceed in reverse order to removal.

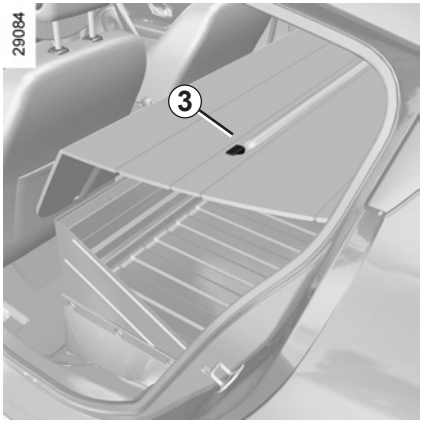

Unclip mountings ***3*** on either side of the parcel shelf, then remove the parcel shelf via the luggage compartment.

To refit it, proceed in the reverse order to removal.

Do not place any objects, especially heavy or hard objects, on the parcel shelf. These may pose a risk to the vehicle occupants if the driver has to brake suddenly or if the vehicle is involved in an accident.

LUGGAGE COMPARTMENT COVER: sport tourer versions (1/2)

To remove the flexible section of the luggage cover

Pull handle ***1*** gently to release the pins from their mounting points located on each side of the luggage compartment.

Guide the luggage cover onto the roller.

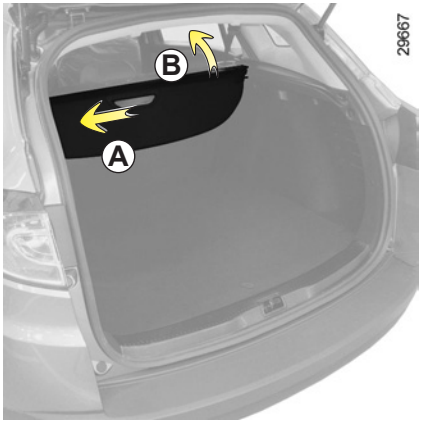

Removing the luggage cover

Push the luggage compartment cover to the left (movement ***A***) and lift the right-hand side of the inertia reel (movement ***B***).

To refit the luggage compartment cover, insert the left-hand side, then push it to the left (movement ***A***) and lower the right-hand side of the inertia reel into its housing.

Do not place any heavy or solid objects on the luggage cover. These may pose a risk to the vehicle occupants if the driver has to brake suddenly or if the vehicle is involved in an accident.

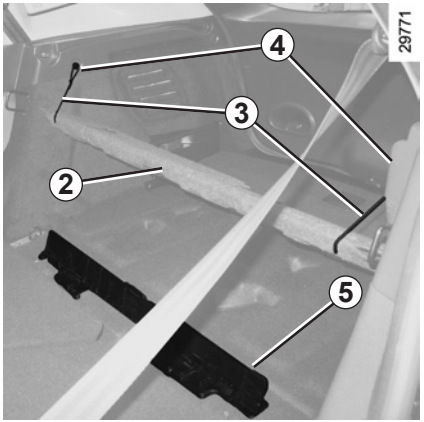

Luggage compartment cover storage

From the rear doors, lower the bench seat seatback (refer to information on the “Rear bench seat” in section 3).

Lift the luggage compartment carpet ***2*** and secure it by attaching straps ***3*** onto hooks ***4***.

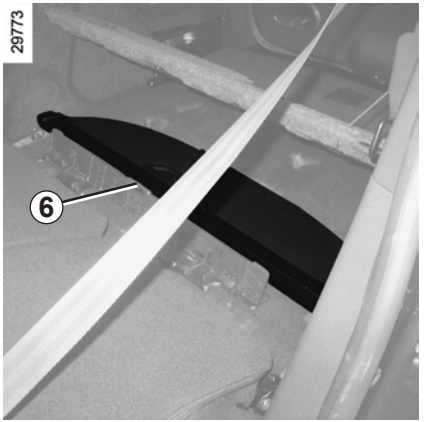

Store luggage compartment cover ***6*** behind the booster seat ***5*** in the dedicated storage compartment.

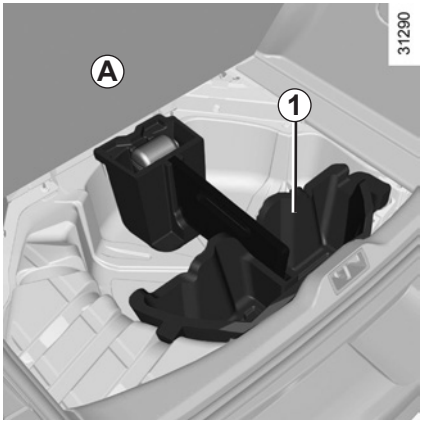

Storage under carpet *1*

(depending on vehicle)

To open, fold back carpet ***A***.

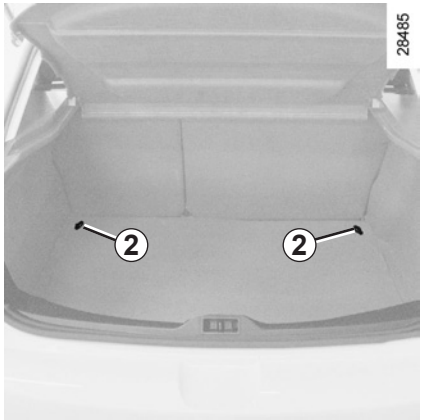

Anchorage points

(Three- and five-seater versions)

Hooks ***2*** located on each corner of the luggage compartment, allow the load to be secured.

Always place objects being transported so that the heaviest items are resting against the back of the rear bench seat.

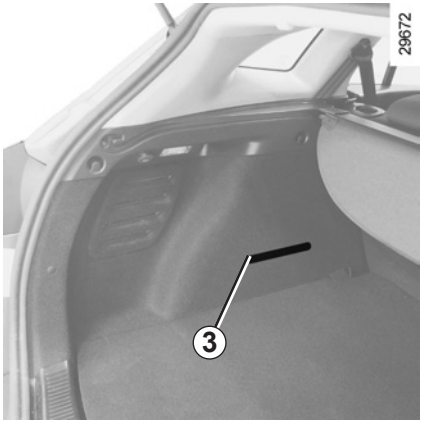

Side straps

Side straps ***3*** are located either side of the luggage compartment, and can be used to store an oil can.

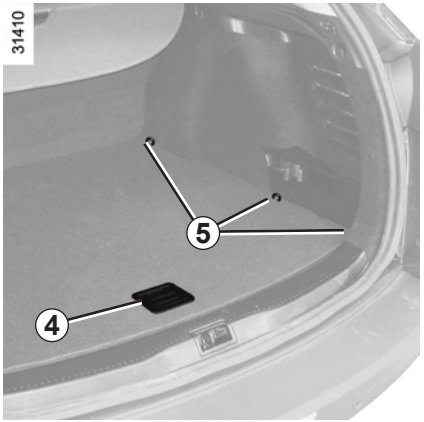

Anchorage points
(sport tourer version)

Hooks ***5***, located on either side of the luggage compartment, allow the load to be secured.

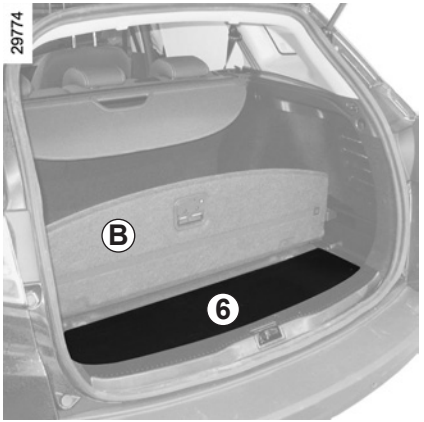

Storage under carpet
(sport tourer version)

To access storage compartments ***7***, fold back section ***B*** using handle ***4*** and, depending on the vehicle, lift flap ***6***.

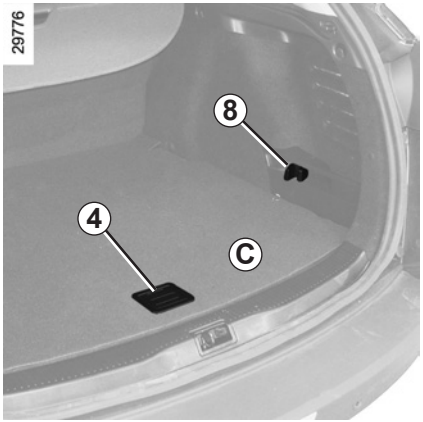

Separating the luggage compartment
(sport tourer version)

The loading area can be separated.

Turn locks ***8*** situated on either side of the luggage compartment to the first notch. Lift divider ***C*** using handle ***4***, when the bolts make contact, push the divider and it will lock.

Maximum weight: 20 kg.

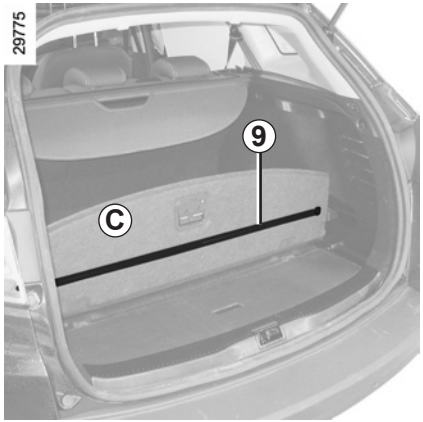

On the back there is an elastic strip ***9*** to hold small objects vertically in position.

Always place objects being transported so that the heaviest items are resting against the back of the rear bench seat.

Always place the objects to be transported so that their largest side rests against the back of the rear bench seat, for normal loads (Example ***A***), or against the back of the front seats when the rear bench seatbacks are folded down.

If you have to place objects on the folded seat back, it is vital that you remove the headrests before folding the seat back so that it can be folded as flat as possible against the seat.

Always position the heaviest items directly on the floor. Use the lashing points on the floor of the luggage compartment, if these are fitted to the vehicle. The luggage should be loaded in such a way that no items will be thrown forward and strike the occupants if the driver has to brake suddenly. Fasten the rear seat belts, even if the seats are not occupied.

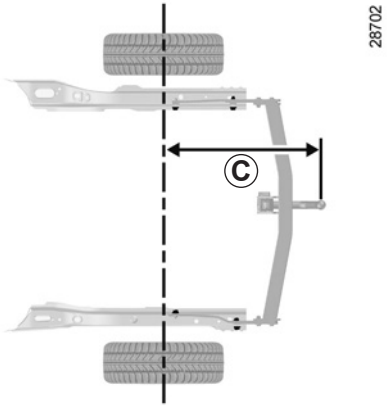

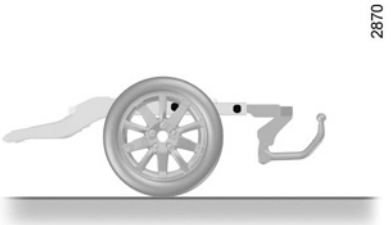

Three-door version ***C* = 875 mm**
Five-door version **C = 867 mm**

Permissible nose weight, maximum permissible towing weight, braked and unbraked: refer to the information on “Weights” in Section 6.

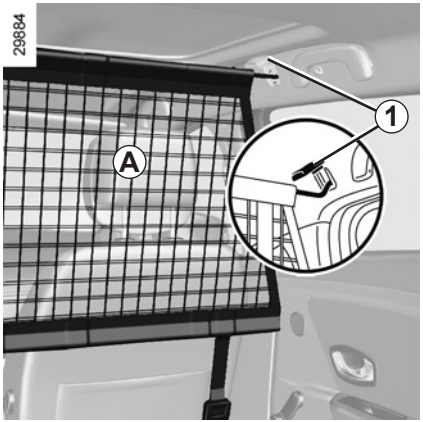

Luggage net *A*

On equipped vehicles, this can be used when transporting animals or luggage, to separate them from the passenger section.

It can be positioned:

– behind the front seats;

– behind the rear bench seat.

Fitting the luggage net behind the front seats

Inside the vehicle on each side:

– lift cover ***1*** to access the upper mounting ring of the net;

– fix the net belt hook onto the ring;

The luggage net must not be used to restrain or hold objects.

Risk of injury.

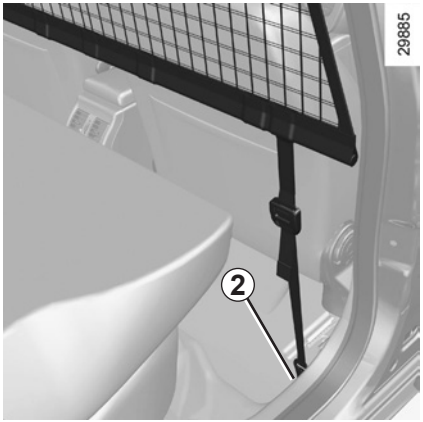

– to access the lower mounting ***2*** for the net the first time you use it, contact an approved Dealer;

– once you have accessed the lower mounting, attach the hook ***2*** of the net strap to the ring;

– adjust the net strap so that it is taut.

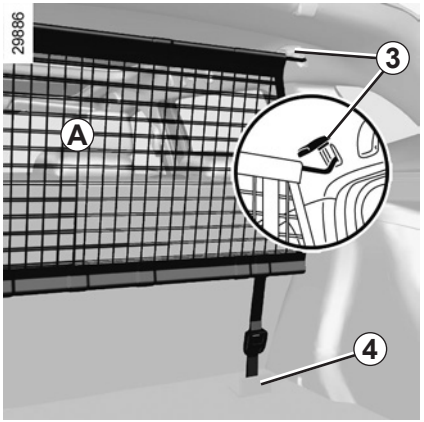

Fitting the luggage net behind the rear bench seat

Inside the vehicle on each side:

– Lift cover ***3*** to access the upper mounting ring of the net;

– fix the net belt hook onto the ring;

– in the luggage compartment, fix the lower mounting strap hook on the net to the anchorage point ***4*** located under the luggage compartment carpet;

– adjust the net strap so that it is taut.

The luggage net must not be used to restrain or hold objects.

Risk of injury.

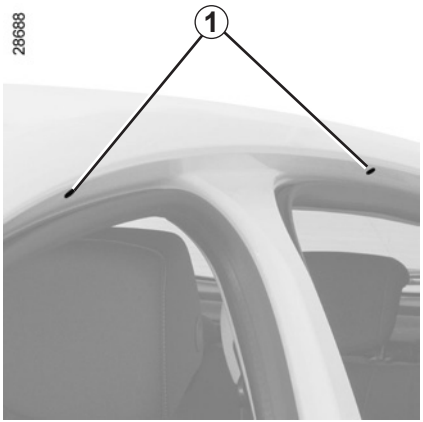

Five-seater and sport tourer versions

Open the doors to access the mounting points ***1***.

If original roof bars, approved by our Technical Department, are supplied with screws, only use these screws for attaching the roof bars to the vehicle.

Sport tourer versions

For vehicles fitted with original roof bars, the roof bars are fixed and must not be removed. To change them contact an approved Dealer.

For information on the range of equipment adapted to your vehicle, we advise you to consult an approved Dealer.

Refer to the fitting instructions for information on how to fit roof bars and conditions of use.

Please keep these instructions with the rest of the vehicle documentation.

Maximum permissible load on roof rack: refer to the information on “Weights” in Section 6.

Three door version

The fitting of roof bars is prohibited on three door versions.

Navigation system

The equipment described below may or may not be fitted to the vehicle, and its location may vary, depending on the vehicle navigation system version.

1 Radio;
2 CD or DVD reader;
3 Central control;
4 Steering column control;
5 Micro.

Hands-free telephone integrated control

On equipped vehicles, use microphone ***5*** and steering column control ***4***.

To use this equipment, consult the instructions for the equipment which should be kept with the other vehicle documentation.

Using the telephone

We remind you of the need to conform to the legislation in force concerning the use of such equipment.

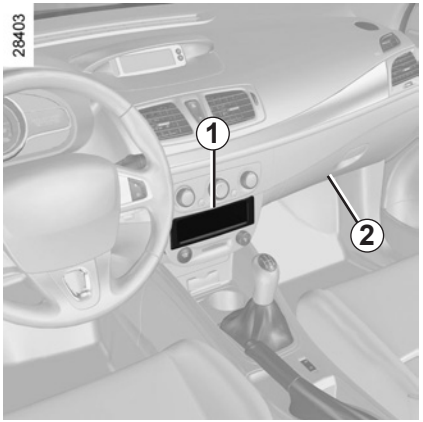

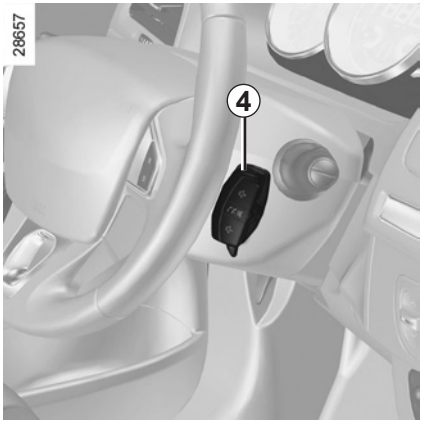

Section 4: Maintenance

Bonnet 4.2
Engine oil level: 4.3
general information 4.3
topping up/filling 4.5
Engine oil change 4.6
Levels: 4.7
engine coolant 4.7
brake fluid 4.8
windscreen/headlight washer reservoir 4.9
Filters 4.9
Tyre pressure 4.10
Battery 4.11
Bodywork maintenance 4.12
Interior trim maintenance 4.14

To open, pull handle ***1***, located on the left-hand side of the dashboard.

Unlocking the bonnet catch

To release it, lift tab ***2***.

The engine may be hot when carrying out operations in close proximity. In addition, the engine cooling fan can come on at any moment.

Risk of injury.

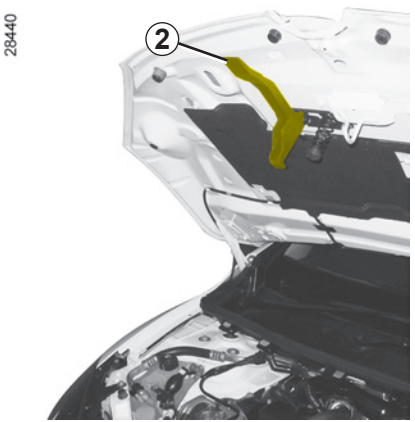

Opening the bonnet

Lift the bonnet; you will need to guide it as it is held by a strut.

Do not press down on the bonnet: there is a risk that the bonnet will close inadvertently.

Closing the bonnet

Check that nothing has been left in the engine compartment.

To close the bonnet again, hold the bonnet in the middle and guide it down, allowing a 30 cm gap before it is closed, then release it. It will latch automatically under its own weight.

Check that it is correctly locked.

In the event of an impact, even slight, against the radiator grille or bonnet, have the bonnet catch checked by an approved dealer as soon as possible.

ENGINE OIL LEVEL: general information (1/2)

It is normal for an engine to use oil for lubrication and cooling of moving parts and it is normal to top up the level between oil changes.

However, contact your approved Dealer if more than 0.5 litres is being consumed every 600 miles (1,000 km) after the running in period.

Oil change frequency: check the oil level from time to time and certainly before any long journey to avoid the risk of damaging your engine.

Reading the oil level

The oil level should be read with the vehicle on level ground, after the engine has been switched off for some time.

The dipstick must be used to read the exact oil level and make sure that the maximum level has not been exceeded (risk of engine damage). Refer to the following pages.

The instrument panel display only alerts the driver when the oil level is at its minimum.

Minimum oil level warning on the instrument panel

When the message "Checking control functions" is displayed press button ***3*** or ***4***.

If the level is below minimum: the message "Oil level" appears on the display along with squares ***1*** that are replaced with dashes ***2*** when the level goes down.

Note: The detailed level cannot be displayed if the vehicle was previously only driven for a short time.

if the level is at the minimum

The message "Top up oil level" and indicator light light up on the instrument panel.

It is vital to top up the oil as soon as possible.

The display only warns the driver if the oil level is at the minimum level. It does not inform the driver that the oil level has exceeded the maximum level as this can only be measured using a dipstick.

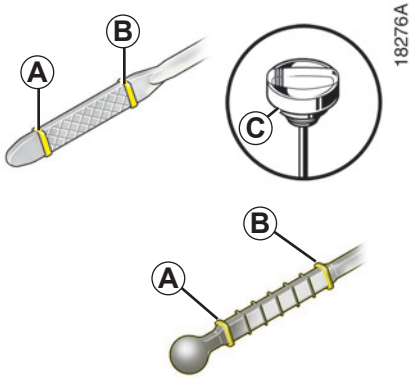

Reading the level using the dipstick

– remove the dipstick and wipe with a clean, lint-free cloth;
– push the dipstick in as far as it will go (for vehicles equipped with a cap-type dipstick ***C***, screw the cap in as far as it will go);
– take out the dipstick again;
– read the level: it should never fall below minimum mark ***A*** or exceed maximum mark ***B***.

Once the operation has been completed, ensure that the dipstick is pushed in as far as it will go or that the “cap-type dipstick” is completely screwed in.

Maximum engine oil level exceeded.

The oil level should only be read with the dipstick as explained above.

If the oil level exceeds the maximum level, **do not start your vehicle** and contact an approved Dealer.

Under no circumstances should maximum filling level ***B*** be exceeded: this could damage the engine and the catalytic converter.

Consult your approved Dealer at once if you notice an abnormal or repeated drop in any of the fluid levels.

In order to prevent splashback, it is recommended that a funnel be used when topping up/filling with oil

The engine may be hot when carrying out operations in close proximity. In addition, the engine cooling fan can come on at any moment.

Risk of injury.

ENGINE OIL LEVEL: topping up/filling (1/2)

Topping up/filling

The vehicle must be parked on level ground and the engine should be cold (for instance, before the engine is started up for the first time in the day).

Engine oil grade

Refer to the Maintenance Service Booklet for your vehicle.

Do not exceed the **max** level and do not forget to refit cap ***1*** and dipstick ***2***.

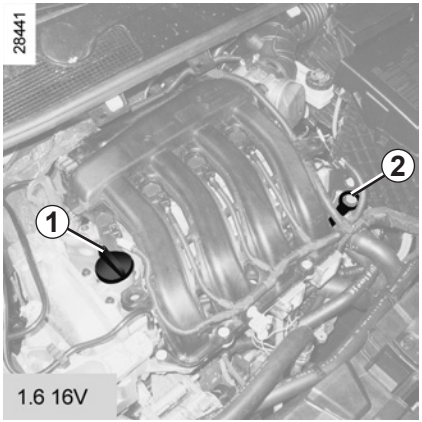

– Unscrew cap ***1***;

– top up the level (as a guide, the capacity between the minimum and maximum reading on the dipstick ***2*** is between 1.5 and 2 litres, depending on the engine);

– wait for approximately 10 minutes to allow the oil to flow into the engine;

– check the level using the dipstick ***2*** (as described above).

Once the operation has been completed, ensure that the dipstick is pushed in as far as it will go or that the cap-type dipstick is completely screwed in.

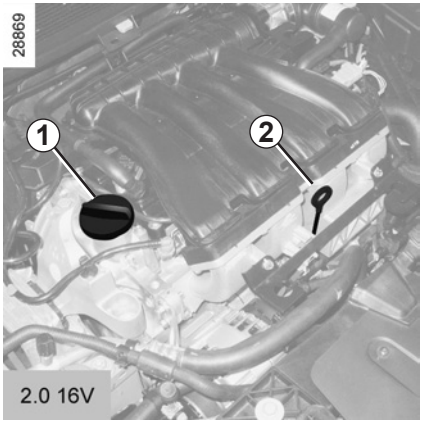

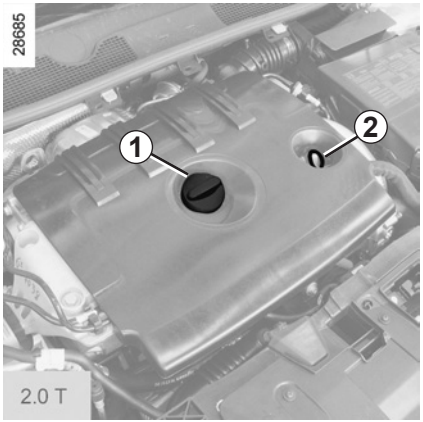

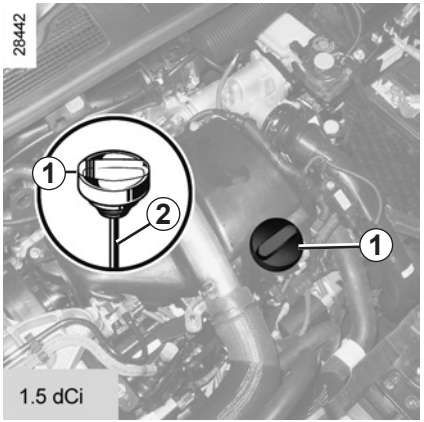

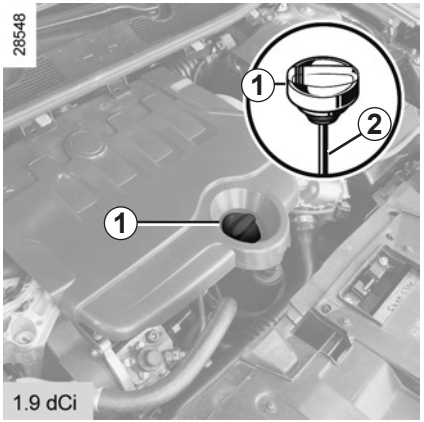

Oil change

Service interval: refer to the Maintenance Service Booklet for your vehicle.

Average capacities for oil change including oil filter
(for information)
1.4 TCe engine: 4.5 litres
1.6 16V engine: 5.0 litres
2.0 16V engine: 4.4 litres
2.0 T engine : 5.4 litres
1.5 dCi engine : 4.5 litres
1.9 dCi engine: 5.1 litres
2.0 dCi engine: 7.4 litres

Engine oil grade

Refer to the Maintenance Service Booklet for your vehicle.

Engine oil change: if you are changing the oil when the engine is hot, be careful not to scald yourself if the oil overflows.

Never run the engine in an enclosed space as exhaust gases are poisonous.

Filling: take care when topping up the oil that no oil drips onto engine components - risk of fire. Remember to refit the cap securely as there is a risk of fire if oil splashes onto hot engine components.

Consult your approved Dealer at once if you notice an abnormal or repeated drop in any of the fluid levels.

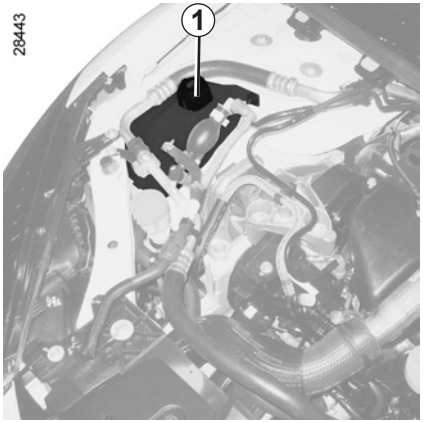

Coolant

With the engine switched off and on level ground, the level **when cold** must be between the “MINI" and "MAXI" marks on coolant reservoir ***1***.

Top this level up **when cold** before it reaches the MINI mark.

Checking intervals

Check the coolant level regularly (very severe damage is likely to be caused to the engine if it runs out of coolant).

If the level needs to be topped up, only use products approved by our Technical Department which ensure:

– protection against freezing;

– anticorrosion protection of the cooling system.

The engine may be hot when carrying out operations in close proximity. In addition, the engine cooling fan can come on at any moment.

Risk of injury.

Replacement intervals

Refer to the Maintenance Service Booklet for your vehicle.

Consult your approved dealer at once if you notice an abnormal or repeated drop in any of the fluid levels.

No operations should be carried out on the cooling circuit when the engine is hot.

Risk of burns.

Brake fluid level

The level should be read with the engine switched off and on level ground. This should be checked frequently, and any time you notice even the slightest loss in braking efficiency.

Level *1*

It is normal for the level to drop as the linings become worn, but it should never drop below the **MIN** line.

If you wish to check the disc and drum wear yourself, you should obtain the document explaining the checking procedure from our network or from the manufacturer's website.

Consult your approved dealer at once if you notice an abnormal or repeated drop in any of the fluid levels.

Topping up

After any operation on the hydraulic circuit, a specialist must replace the fluid.

Only use fluids approved by our Technical Department (and taken from a sealed container).

Replacement intervals

Refer to the Maintenance Service Booklet for your vehicle.

The engine may be hot when carrying out operations in close proximity. In addition, the engine cooling fan can come on at any moment.

Risk of injury.

Windscreen/headlight washer reservoir

Topping up

With the engine switched off, open cap ***1***, fill until you can see the fluid, then refit the cap.

NOTE

Depending on the vehicle, to find out the fluid level, open cap ***1*** and pull out the dipstick.

Liquid

Screen wash product (product with antifreeze in winter).

Jets

Use a tool such as a needle to adjust the height of the windscreen washer jets.

Filters

The replacement of filter elements (air filter, passenger compartment filter, diesel filter, etc.) is scheduled in the maintenance operations for your vehicle.

Replacement intervals for filter elements: refer to the Maintenance Service Booklet for your vehicle.

TYRE PRESSURE

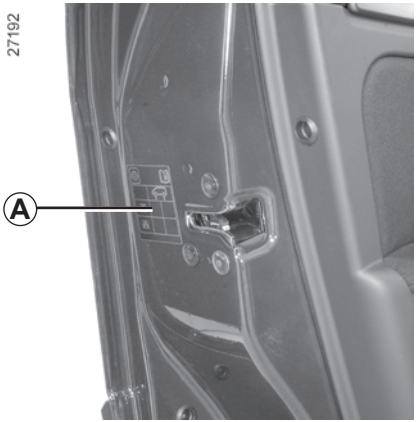

The tyre pressure is indicated on label ***A*** affixed to the edge of the driver's door. Open the door to read it.

B: dimension of the tyres fitted to the vehicle.

C: tyre pressures for the front wheels (non-motorway).

D: tyre pressures for the rear wheels (non-motorway).

E: tyre pressures for the front wheels (motorway).

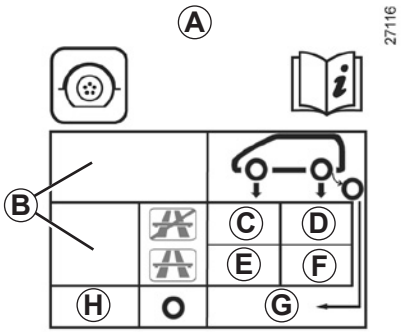

F: tyre pressures for the rear wheels (motorway).

G: tyre pressure for the emergency spare wheel.

H: emergency spare wheel tyre dimension if different to the four tyres fitted to the vehicle.

Tyre safety and use of snow chains

Refer to the information on "Tyres" in Section 5 for the servicing conditions and, depending on the version, the use of chains.

Special note

For vehicles used fully laden (maximum permissible all-up weight) **and towing a trailer.** The maximum speed must be limited to **60 mph (100 km/h)** and the tyre pressure increased by **0.2 bar.**

Refer to the information on "Weights" in Section 6.

When they need to be replaced, only tyres of the same make, size, type and profile should be used.

Tyres fitted to the vehicle should either be identical to those fitted originally or conform to those recommended by your approved dealer.

BATTERY

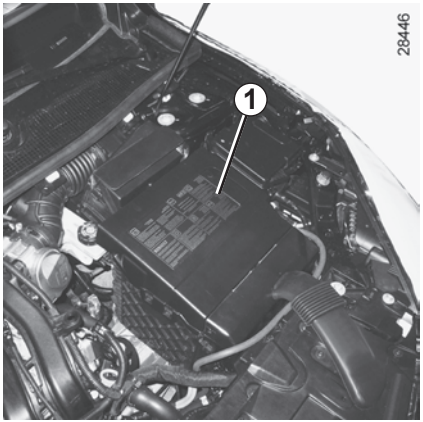

The battery ***1*** does not require any maintenance.

Handle the battery with care as it contains sulphuric acid, which must not come into contact with eyes or skin. If it does, wash the affected area with plenty of cold water. If necessary, consult a doctor.

Ensure that naked flames, red hot objects and sparks do not come into contact with the battery as there is a risk of explosion.

Depending on the vehicle, a system continuously checks the battery charge status. If the level drops, the message “Battery low start engine” is displayed on the instrument panel. In this case, start the engine. Then the message “Battery charging” appears on the instrument panel for the duration of the charging time.

The charge status of your battery can decrease especially if you use your vehicle:

– for short journeys;
– for driving in town;
– when the temperature drops;
– after extended use of consumers (radio etc.) with the engine switched off.

Replacing the battery

As this operation is complex, we advise you to contact an approved Dealer.

The battery is a **specific type**, please ensure it is replaced with the same type. Consult an approved dealer.

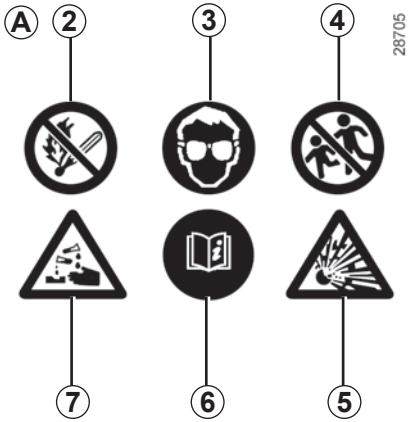

Label *A*

Observe the indications on the battery:
– ***2*** naked flames and smoking forbidden;
– ***3*** eye protection required;
– ***4*** keep away from children;
– ***5*** explosive materials;
– ***6*** refer to the handbook;
– ***7*** corrosive materials.

The engine may be hot during operations in close proximity. In addition, the engine cooling fan may start at any moment.

Risk of injury.

Protection against the effects of corrosive agents

Although your vehicle has been treated with very effective anti-corrosion products, it nevertheless remains subject to the effects of:

- **corrosives in the atmosphere**
  - atmospheric pollution (urban and industrial areas),
  - saline atmospheres (near the sea, particularly in hot weather),
  - seasonal and damp climatic conditions, (e.g.: road salt in winter, water from road cleaners, etc.).
- **abrasives**

  Wind-borne dust and sand, mud, road grit thrown up by other vehicles, etc.
- **minor impacts**

You should take a minimum number of precautions in order to safeguard your vehicle against such risks and not to lose the benefit of your vehicle's anti-corrosion protection.

You should not:

- Degrease or clean mechanical components (e.g. the engine compartment), underneath the body, parts with hinges (e.g. inside the fuel tank flap) and painted plastic external fittings (e.g. bumpers) using high-pressure cleaning equipment or by spraying on products not approved by our Technical Department. If adequate precautions are not taken, this could give rise to corrosion or operational faults.
- Wash the vehicle in bright sunlight or freezing temperatures.
- Scrape off mud or dirt without prewetting.
- Allow dirt to accumulate.
- Allow rust to form following minor impacts.
- Use solvents not approved by our Technical Department to remove stains as this could damage the paintwork.
- Drive frequently in snow or muddy conditions without washing the vehicle, particularly under the wheel arches and body.

You should

– Wash your car frequently, **with the engine off**, with cleaning products recommended by our Technical Department (never use abrasive products) and be sure to jet-rinse off:

  – spots of tree resin and industrial grime;

  – **bird droppings,** which cause a chemical reaction with the paint that **rapidly discolours paintwork and may even cause the paint to peel off;**
  Wash the vehicle immediately to remove these marks since it is impossible to remove them by polishing;

  – salt, particularly in the wheel arches and underneath the body after driving in areas where the roads have been gritted;

  – mud in the wheel arches and underneath the body which form damp patches.

– Observe the vehicle stopping distances when driving on gravelled surfaces to prevent paint damage.

– Repair, or have repaired quickly, areas where the paint has been damaged, to prevent corrosion spreading.

– Remember to visit the body shop periodically if your vehicle has an anti-corrosion warranty. Refer to the Maintenance Service Booklet.

– Respect local regulations about washing vehicles (e.g. do not wash your vehicle on a public highway).

– Before going through a roller type car wash, return the windscreen wiper stalk to the Off position (refer to the information on the “Windscreen wash/wipe” in Section 1). Check the mounting of external accessories, additional lights and mirrors, and ensure that the wiper blades are secured with adhesive tape.

  Remove the radio aerial mast if your vehicle is fitted with this equipment.

  Remember to remove the tape and refit the antenna after washing.

– Spray mechanical components, hinges, etc., with products approved by our Technical Department to protect them after they have been cleaned.

We have selected special products to care for your vehicle and you can obtain these from the manufacturer’s accessory outlets.

Whatever type of stain is on the trim, use soapy water (if possible, warm water) containing:

– natural soap,

– washing up liquid (with one part washing up liquid to 200 parts water).

Rinse off with a soft, damp cloth.

Special instructions

– **Glass instrument panels** (e.g. instrument panel, clock, exterior temperature display, radio display)

  Use a soft cloth (or cotton wool).

  If this does not clean it properly, use a soft cloth (or cotton wool) slightly moistened with soapy water and then wipe clean with a soft damp cloth or cotton wool.

  Finally, **carefully** dry off with a soft dry cloth.

  Cleaning products containing alcohol must not be used under any circumstances.

– **Seat belts**

  These must be kept clean.

  Use products selected by our Technical Department (Approved outlets) or warm, soapy water and a sponge and wipe with a dry cloth.

  Detergents or dyes must not be used under any circumstances.

You should not:

You are strongly advised not to position objects such as deodorants, scents, etc. near air vents, as this could damage your dashboard trim.

You are strongly advised not to use high-pressure or spray cleaning equipment inside the passenger compartment: use of such equipment could impair the correct functioning of the electrical or electronic components in the vehicle, or have other detrimental effects.

Section 5: Practical advice

Puncture 5.2
Emergency spare wheel 5.2
Tyre inflation kit 5.3
Tool kit (jack - wheelbrace, etc.) 5.6
Wheel trim 5.6
Changing a wheel 5.7
Tyres (tyre and wheel safety, use in winter) 5.9
Headlights (changing bulbs) 5.12
Rear lights (changing bulbs) 5.15
Indicator lights (changing bulbs) 5.20
Interior lights (changing bulbs) 5.21
Fuses 5.23
Battery 5.25
RENAULT card: battery 5.27
Fitting a radio 5.28
Accessories 5.29
Wiper (replacing blades) 5.30
Towing 5.31
Operating faults 5.33

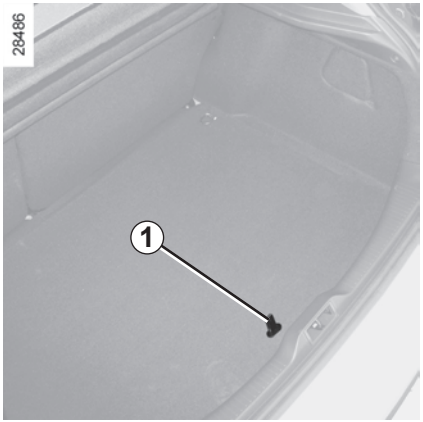

In the event of a puncture, depending on the vehicle, you will have:

An emergency spare wheel or tyre inflation kit (refer to the information on the following pages).

Emergency spare wheel

This is located in the luggage compartment. To access it:
- open the tailgate;
- depending on the vehicle, unscrew the anchorage points;
- fold back the luggage compartment carpet using tab ***1***;
- unscrew the central mounting;
- remove the emergency spare wheel.

Special note:

The Tyre Pressure Monitor function does not check the emergency spare wheel (the wheel replaced by the emergency spare wheel disappears from the instrument panel display).

Refer to the information on the “Tyre pressure monitor” in Section 2.

If the emergency spare wheel has been stored for several years, have it checked by your Dealer to ensure that it is safe to use.

Vehicles fitted with an emergency spare wheel smaller than the four other wheels:

- Never fit more than one emergency spare wheel to the same vehicle.
- Replace the emergency spare wheel as soon as possible with a wheel with the same dimensions as the original.
- When this is fitted to the vehicle, which must only be a temporary measure, the driving speed must not exceed the speed indicated on the label on the wheel.
- Fitting an emergency spare wheel may alter the way the vehicle usually runs. Avoid sudden acceleration or deceleration and reduce your speed when cornering.
- If you need to use snow chains, fit the emergency spare wheel to the rear axle and check the tyre pressure.

TYRE PRESSURE KIT (1/3)

The kit repairs tyres when tread ***A*** has been damaged by objects smaller than 4 mm. It cannot repair all types of puncture, such as cuts larger than 4 mm, or cuts in tyre sidewall ***B***.

Ensure also that the wheel rim is in good condition.

Do not attempt to use the inflation kit if the tyre has been damaged as a result of driving with a puncture.

You should therefore carefully check the condition of the tyre sidewalls before any operation.

Driving with underinflated, flat or punctured tyres can be dangerous and may make the tyre impossible to repair.

This repair is temporary

A tyre which has been punctured should always be inspected (and repaired, where possible) by a specialist.

When taking a tyre which has been repaired using this kit to be replaced, you must inform the specialist.

When driving, vibration may be felt due to the presence of the repair product injected into the tyre.

The kit is only approved for inflating the tyres of the vehicle originally equipped with the kit.

It must never be used to inflate the tyres of another vehicle, or any other inflatable object (rubber ring, rubber boat, etc.).

Avoid spillage on skin when handling the repair liquid bottle. If droplets do leak out, rinse them off with plenty of water.

Keep the repair kit away from children.

Do not dispose of the empty bottle in the countryside. Return it to your approved dealer or to a recycling organisation.

The bottle has a limited service life which is indicated on its label. Check the expiry date.

Contact an approved dealer to replace the inflation tube and repair product bottle.

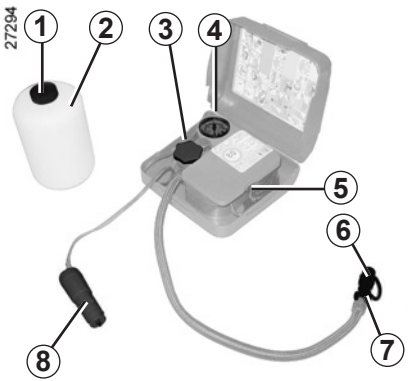

Before using this kit, park the vehicle at a sufficient distance from traffic, switch on the hazard warning lights, apply the handbrake, ask all passengers to leave the vehicle and keep them away from traffic.

Depending on the vehicle, in the event of a puncture, use the kit located underneath the luggage compartment carpet.

Depending on the vehicle, remove the central partition in the storage compartment to access the inflation kit.

Open the kit, remove caps ***1*** and ***3*** (the cap **must not** be removed from the bottle) then screw bottle ***2*** to its base ***3***.

Do not pull out the foreign body causing the puncture if it is still in the tyre.

With the ignition on,

– connect adapter ***8*** to the accessories socket on the dashboard of the vehicle;

– unscrew the valve cap on the wheel concerned and screw inflation adapter ***6*** onto the valve;

– press switch ***5*** to inflate the tyre to the recommended pressure (check the label affixed to the edge of the driver's door);

– after a maximum of 7 minutes, stop inflating and read the pressure (on pressure gauge ***4***);

  Note: while the bottle is emptying (approximately 30 seconds), pressure gauge ***4*** will briefly indicate a pressure of 6 bar, then the pressure will drop.

– adjust the pressure: to increase it, continue inflating with the kit, to reduce it, turn button ***7*** located on the inflation adapter.

If the correct pressure cannot be achieved, repair is impossible. Do not drive the vehicle. Consult an approved dealer.

Once the tyre is inflated correctly:
- stop using the kit;
- close the integrated cap on the bottle again;
- disconnect adapter ***8***;
- affix driving recommendation label ***9*** to the dashboard where it can easily be seen by the driver;
- store the kit;
- start the engine straight away and, after driving a maximum of approximately **2 miles (3 kilometres) or 10 minutes**, stop and check the pressure using the inflation kit. If it is above 1.3 **bar**, adjust it to the recommended pressure (refer to the label affixed to the edge of the driver's door), otherwise contact an approved dealer: repair is not possible.

Note: after using the inflation kit, you should visit an approved Dealer to replace the inflation hose and the bottle of repair product.

Precautions when using the kit

The kit should not be operated for more than 15 consecutive minutes.

Nothing should be placed around the driver's feet as such objects may slide under the pedals during sudden braking manoeuvres and obstruct their use.

Following repair with the kit, do not travel further than 120 miles (200 km). In addition, reduce your speed and under no circumstances exceed 48 mph (80 km/h). The sticker, which you must affix in a prominent position on the dashboard, reminds you of this.

Depending on the country or local legislation, a tyre repaired with the tyre pressure kit will need to be replaced.

Please be aware that a poorly tightened or missing valve cap can make the tyres less airtight and lead to pressure loss.

Always use valve caps identical to those fitted originally and tighten them fully.

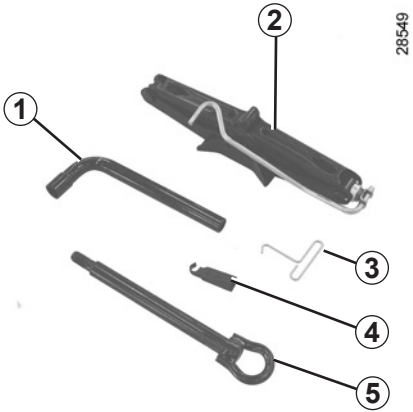

The tool kit is located in the luggage compartment: lift the carpet.

The tools included in the tool kit depend on the vehicle.

Wheelbrace *1*

Jack *2*
When replacing the jack, fold it correctly and position the wheelbrace correctly before replacing it in its position.

Hubcap tool *3*
This tool is used to remove the wheel trims.

Wheel bolt guide *4*
To finish loosening or starting to tighten the wheel bolts.

Towing hitch *5*
Refer to the information on “Towing” in Section 5.

Do not leave the tools unsecured inside the vehicle as they may come loose under braking. After use, check that all the tools are correctly clipped into the tool kit, then position it correctly in its housing: there is a risk of injury.

If wheel bolts are supplied in the tool kit, only use these bolts for the emergency spare wheel: refer to the label affixed to the emergency spare wheel.

The jack is designed for wheel changing purposes only. Under no circumstances should it be used for carrying out repairs underneath the vehicle or to gain access to the underside of the vehicle.

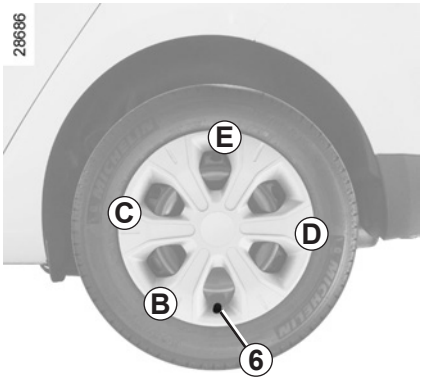

Wheel trim

Remove it using the hubcap tool ***3*** by connecting the hook in the recess provided next to the valve ***6*** (to attach the metal clip).

To refit wheel trim, align it with valve ***6***. Push the retaining hooks in fully, starting with side ***B*** near the valve, followed by ***C*** and ***D***, finishing at ***E*** opposite the valve.

Note: if you are using anti-theft bolts, refer to the information on “Changing a wheel”.

Switch on the hazard warning lights.

Keep the vehicle away from traffic and on a level surface where it will not slip (if necessary, place a solid support under the jack base).

Apply the parking brake and engage a gear (first or reverse, or **P** for automatic transmissions).
Ask all the passengers to leave the vehicle and keep them away from traffic.

Vehicles equipped with a jack and wheelbrace

If necessary, remove the wheel trim.

Use the wheelbrace ***3*** to slacken off the wheel bolts. Position it so as to be able to push from above.

If the vehicle is not equipped with a jack or wheelbrace, you can obtain these from your approved dealer.

If the vehicle is parked on the hard shoulder, you must warn other road users of your vehicle's presence with a warning triangle or with other devices as per the legislation applying to the country you are in.

Offer up the jack ***4*** horizontally; the jack head **must** be lined up with jacking point ***1*** located on the underside of the sill, closest to the wheel concerned, as shown by arrow ***2***.

Start cranking the jack up by hand to align the base plate (which should be pushed slightly under the vehicle).

Turn the wheelbrace until the wheel lifts off the ground.

To prevent any risk of injury or damage to the vehicle, only crank the jack until the wheel you are replacing is a maximum of 3 centimetres off the ground.

CHANGING A WHEEL (2/2)

Undo the bolts and take off the wheel.

Fit the emergency spare wheel onto the hub and rotate it until the mounting holes in the wheel coincide with those of the hub.

If bolts are supplied with the emergency spare wheel, only use these bolts for the emergency spare wheel. Tighten the bolts, checking that the wheel is correctly positioned on its hub and lower the jack.

With the wheel on the ground, tighten the bolts fully and have the tightness of the bolts checked (tightening torque: 110 N.m) and the emergency spare wheel pressure checked as soon as possible.

Anti-theft bolt

If you use anti-theft bolts, fit these nearest the valve (wheel trim may not be able to fit).

If you have a puncture, replace the wheel as soon as possible.

A tyre which has been punctured should always be inspected (and repaired, where possible) by a specialist.

Tyre and wheel safety

The tyres are the only contact between the vehicle and the road, so it is essential to keep them in good condition.

You must make sure that your tyres conform to local road traffic regulations.

When they need to be replaced, only tyres of the same make, size, type and profile should be used.

Tyres fitted to the vehicle should either be identical to those fitted originally or conform to those recommended by your approved dealer.

Maintaining the tyres

The tyres must be in good condition and the tread form must have sufficient depth; tyres approved by our Technical Department have wear warning strips ***1*** that are **indicators moulded into the tread at several points**.

When the tyre tread has been worn to the level of the wear indicators, **they become visible *2*:** it is **then** necessary to replace your tyres because the tread rubber is **no more than 1.6 mm deep, resulting in poor roadholding on wet roads**.

An overloaded vehicle, long journeys by motorway, particularly in very hot weather, or continual driving on poorly surfaced minor roads will lead to more rapid tyre wear and affect safety.

Incidents which occur when driving, such as striking the kerb, may damage the tyres and wheel rims, and could also lead to misalignment of the front or rear axle geometry. In this case, have the condition of these checked by an approved dealer.

Tyre pressures

Adhere to the tyre pressures (including the emergency spare wheel). The tyre pressures should be checked at least once a month and additionally before any long journey (refer to the label affixed to the edge of the driver's door).

Incorrect tyre pressures lead to abnormal tyre wear and unusually hot running. These are factors which may seriously affect safety and lead to:

– poor road holding,

– risk of bursting or tread separation.

The pressure depends on the load and the speed of use. Adjust the pressure according to the conditions of use (refer to the label affixed to the edge of the driver's door).

Pressures should be checked when the tyres are cold; ignore higher pressures which may be reached in hot weather or following a fast journey.

If tyre pressures cannot be checked when the tyres are **cold,** the normal pressures must be increased by **0.2** to **0.3** bar (or **3 PSI**).

Never deflate a hot tyre.

Special note

Depending on the vehicle, there may be an adapter which needs to be positioned on the valve before air is added.

Please be aware that a poorly tightened or missing valve cap can make the tyres less airtight and lead to pressure loss.

Always use valve caps identical to those fitted originally and tighten them fully.

Fitting new tyres

For safety reasons, this operation must be carried out by a specialist.

Fitting different tyres may change your vehicle as follows:

– It may mean that your vehicle no longer conforms to current regulations;

– It may change the way it handles when cornering;

– It may cause the steering to be heavy;

– It may affect the use of snow chains.

Emergency spare wheel

Refer to the information on the "Emergency spare wheel" and instructions on "Changing a wheel" in Section 5.

Use in winter

Chains

For safety reasons, fitting snow chains to the rear axle is strictly forbidden.

Chains cannot be fitted to tyres which are larger than those originally fitted to the vehicle.

Snow or Winter tyres

We would recommend that these be fitted to all **four wheels** to ensure that your vehicle retains maximum adhesion.

Warning: These tyres sometimes have a specific direction of rotation and a maximum speed index which may be lower than the maximum speed of your vehicle.

Studded tyres

This type of equipment may only be used for a limited period and as laid down by local legislation. It is necessary to observe the speed specified by current legislation.

These tyres must, at a minimum, be fitted to the two front wheels.

In all cases, we would recommend that you contact an approved dealer who will be able to advise you on the choice of equipment which is most suitable for your vehicle.

Chains may only be fitted to tyres of the same size as those originally fitted to **your vehicle**.

Chains may be fitted, provided that they are specific chains. We would advise you to consult an approved Dealer.

Changing a wheel

As the tyre pressure monitor may take several minutes following driving to correctly determine the positions of the wheels and the pressure values, check the tyre pressures following any operation.

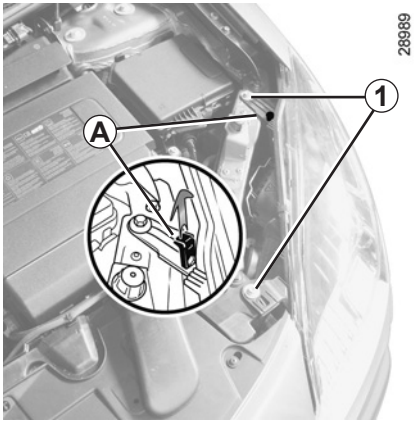

After opening the bonnet, pull tool ***A*** upwards. Remove the two screws ***1*** from the headlight using the tool.

Pull the headlight forwards, sliding it in its rails up to the end stop.

After refitting the light, tighten the screws ***1*** and reposition the tool correctly in its housing.

Direction indicator lights

Rotate the bulb holder ***B*** to unlock it.
Bulb type: PY21W.

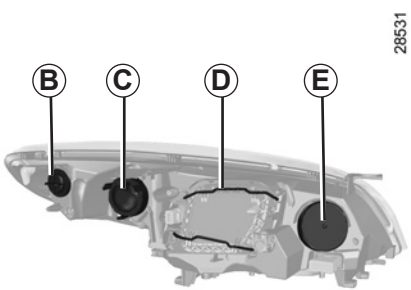

Daytime running light

Remove the cover ***C***, unlock the bulb holder ***2*** by rotating it.
Bulb type: P21W.

Dipped beam headlight *D*

Halogen dipped beam headlight
Unlock the two springs ***D***, remove the cover, then unclip the spring ***3*** to remove the bulb ***4***.
Bulb type: H7.

It is **essential** to use anti U.V. 55W bulbs so as not to damage the plastic on the headlights.

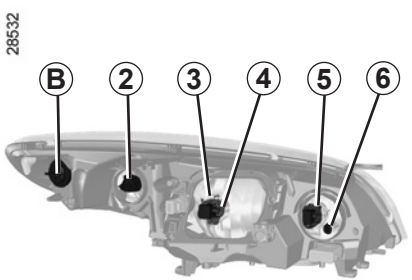

Do not touch the bulb glass. Hold it by its base.
When the bulb has been changed, make sure you refit the cover correctly.

Discharge bulb dipped beam headlight
Bulb type: D1S.

Due to the danger involved in handling high-voltage devices, this type of bulb must be replaced by an approved dealer.

HEADLIGHTS: changing bulbs (2/2)

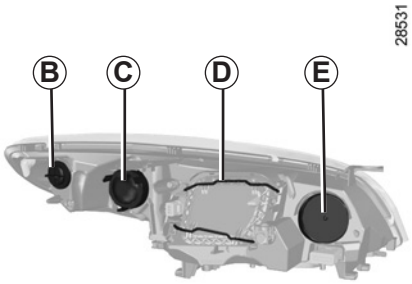

Main beam headlight

Remove the cover ***E***, press the bulb holder ***5*** downwards to unlock it.

Bulb type: H7.

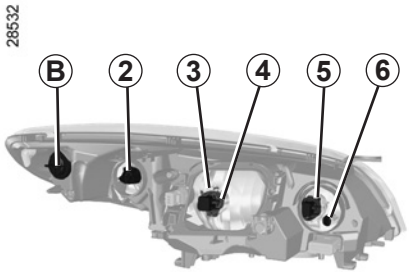

Front side light

Remove the cover ***E*** and pull the bulb holder ***6***.

Bulb type: W5W.

To comply with current legislation, or as a precaution, you can obtain an emergency kit from an approved dealer containing a set of spare bulbs and fuses.

The bulbs are under pressure and can break when replaced.

Risk of injury.

The engine may be hot when carrying out operations in close proximity. In addition, the engine cooling fan can come on at any moment.

Risk of injury.

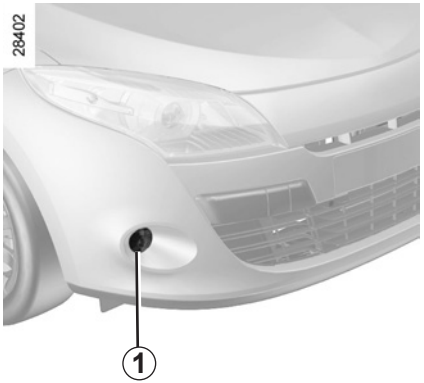

Front fog lights *1*

However, because the front bumper needs to be removed, **you are advised to have your bulbs replaced by an approved dealer.**

The bulbs are under pressure and can break when replaced.

Risk of injury.

Additional lights

If you wish to fit fog lights or long range headlights to your vehicle, consult an approved Dealer.

Any operation on (or modification to) the electrical system must be performed by an approved dealer since an incorrect connection might damage the electrical equipment (harness, components and in particular the alternator). In addition, your Dealer has all the parts required for fitting these units.

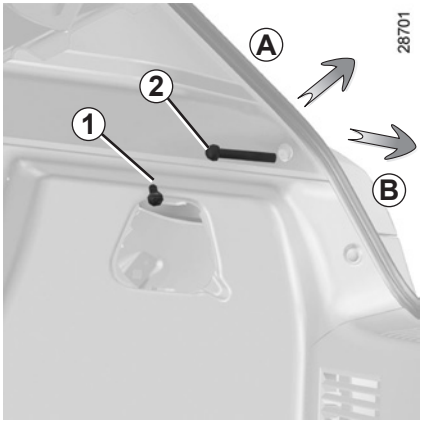

Five-door versions

Direction indicator lights/brake and side lights

– Unclip the cover to access nuts ***1*** and ***2***;

– unscrew nut ***2*** without removing it completely;

The bulbs are under pressure and can break when replaced.

Risk of injury.

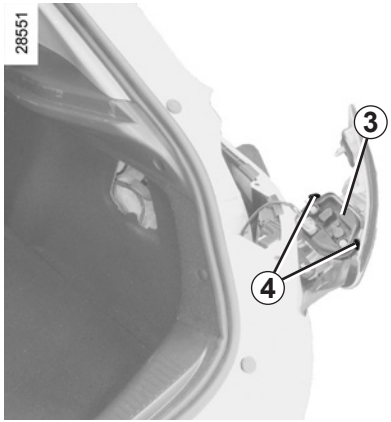

– loosen nut ***1***, press down on it to release the front of the light (movement ***A***) then remove the nut;

– from the outside, pull the light towards you (movement ***B***);

– remove the bulb holder ***3*** by releasing the clips ***4***.

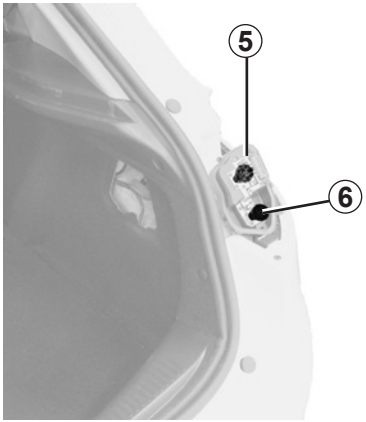

Direction indicator lights *5*

Bulb type: PY21W.

Side light and brake light *6*

Bulb type: P21/5W.

Refitting

To refit, proceed in the reverse order, taking care not to damage the wiring.

Five-door versions
(continued)

Fog lights/side lights and reversing lights

– From the luggage compartment, unclip flap ***7***, then remove the bolts ***8***.

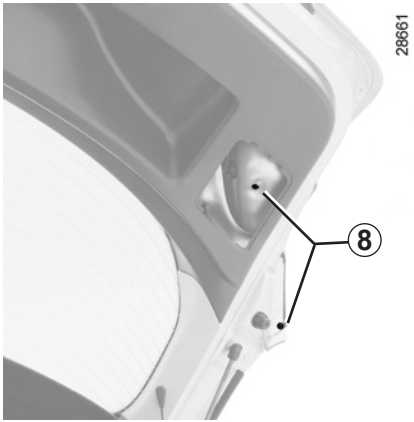

– Lower the tailgate, then pull light ***9*** towards the rear to release it.

– Unscrew the bulb holder for the bulb concerned.

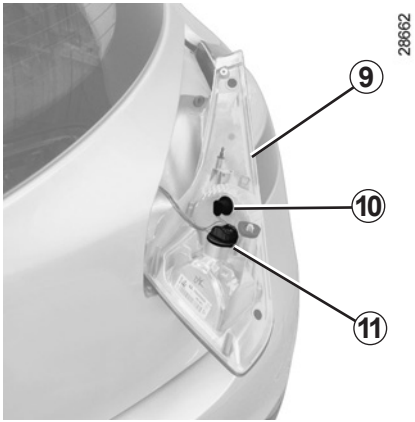

Reversing light *10*

Bulb type: W16W.

Fog light/side light *11*

Bulb type: P21/4W.

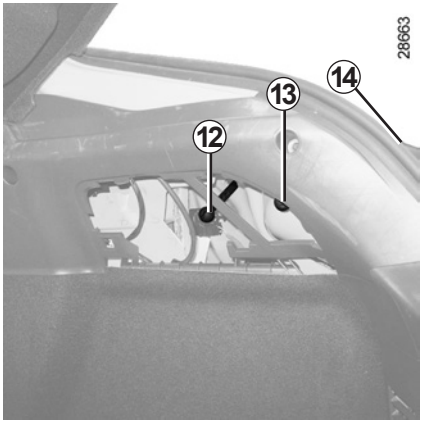

Three-door versions

- Unclip the access flap;
- unscrew nuts ***12*** and ***13***;
- from the outside, remove bolt ***14***, then pull on the light;
- remove the bulb holder by releasing the clips ***15***;

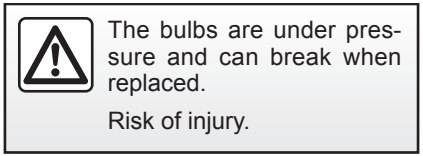

The bulbs are under pressure and can break when replaced.

Risk of injury.

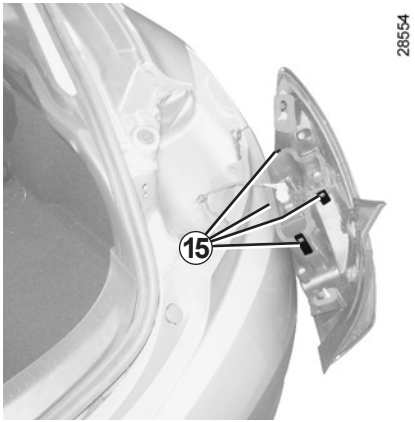

16 **Side light/stop light**

Bulb type: P21/5W.

17 **Direction indicator light**

Bulb type: PY21W.

18 **Reversing light**

Bulb type: P21W.

Rear fog light

Undo bulb holder ***19***, turning it towards the centre of the vehicle by accessing it from underneath.

Bulb type: P21W.

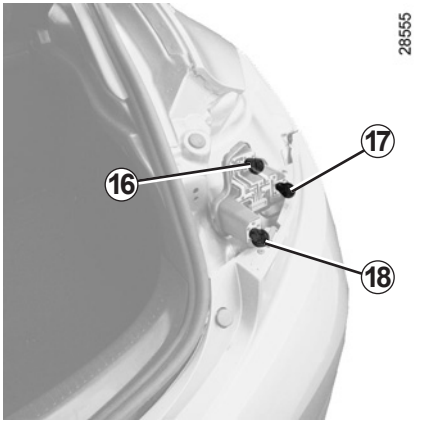

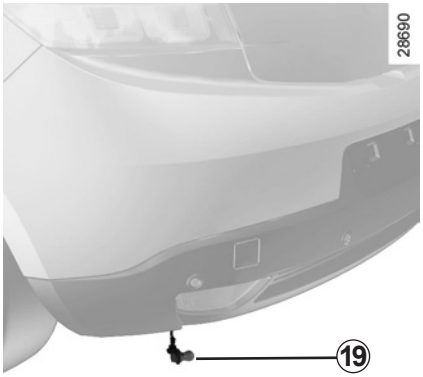

Sport tourer Versions

Side lights/reversing lights and fog lights

– From the luggage compartment, unclip flap ***20*** (movement ***C***), then remove the bolts .

– Lower the tailgate, then pull light ***21*** towards the rear to release it.

– Turn the bulb holder of the bulb concerned a quarter of a turn.

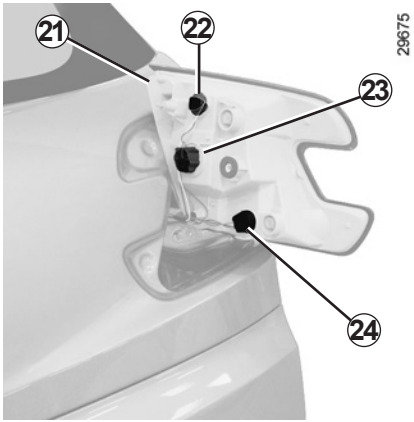

Side light *22*

Bulb type: W5W.

Reversing light *23*

Bulb type: P21W.

Fog light *24*

Bulb type: H21W.

Refitting

To refit, proceed in the reverse order, taking care not to damage the wiring.

The bulbs are under pressure and can break when replaced.

Risk of injury.

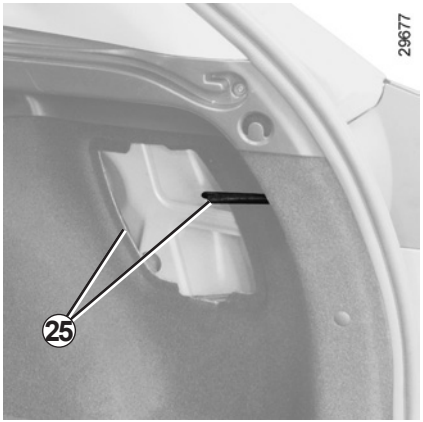

Estate versions
(continued)

Brake and side lights/direction indicator lights

– Unclip covers ***25*** to access the nuts;

– unscrew the 2 nuts;

– from the outside, pull the light towards you;

– remove the bulb holder ***27*** by releasing the clips ***26***.

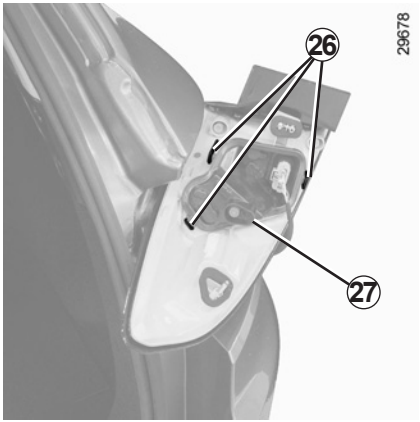

Side light and brake light *28*

Bulb type: P21/5W.

Direction indicator lights *29*

Bulb type: PY21W.

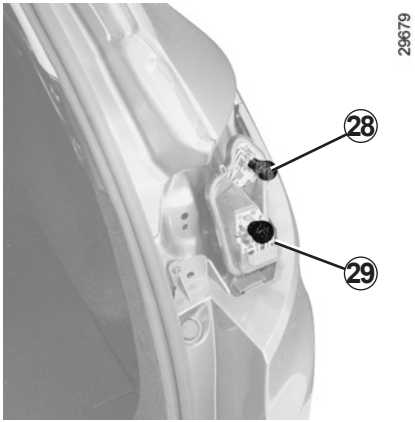

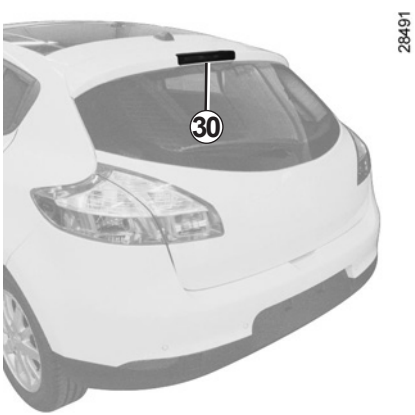

High level brake light *30*

Consult an approved Dealer.

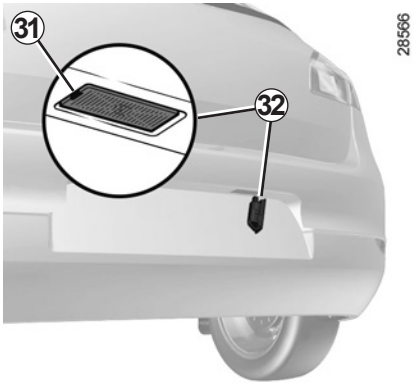

Number plate lights *32*

– Unclip light ***32*** by pressing tab ***31***;

– remove the light cover to gain access to the bulb.

Bulb type: W5W.

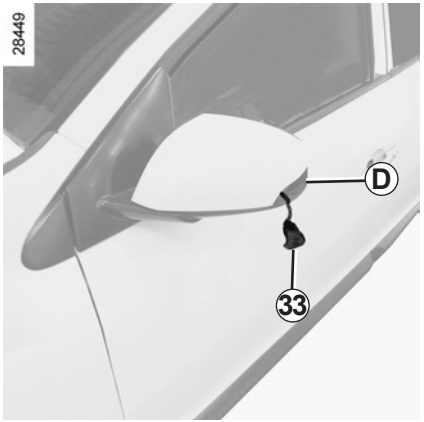

Indicator lights *33*

– Unclip indicator light ***33*** (using a flat-blade screwdriver type tool positioned at ***D*** to move the indicator light towards the front of the vehicle);

– turn the bulb holder a quarter of a turn and take out the bulb.

Bulb type: W5W.

The bulbs are under pressure and can break when replaced.

Risk of injury.

INTERIOR LIGHTING: changing bulbs (1/2)

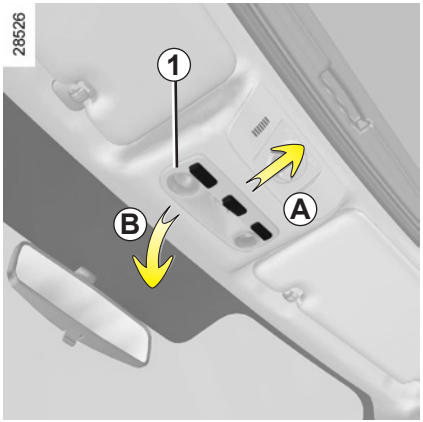

Courtesy light

– Position the 3 switches in the central position;

– move the courtesy light backwards (movement ***A***) then tilt the front downwards (movement ***B***);

– when removing the courtesy light, ensure that you do not pull the electrical wires;

– unclip the lens ***1***;

Note: to remove the defective bulb, you can use a flat-blade screwdriver or similar.

Bulb type: W5W.

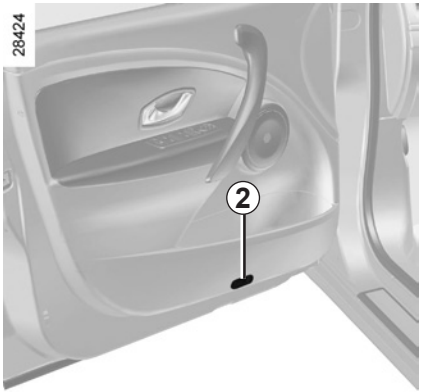

Door lights

Unclip light ***2*** (using a flat-blade screwdriver or similar).

Turn the bulb holder a quarter of a turn and take out the bulb.

Bulb type: W5W.

The bulbs are under pressure and can break when replaced.

Risk of injury.

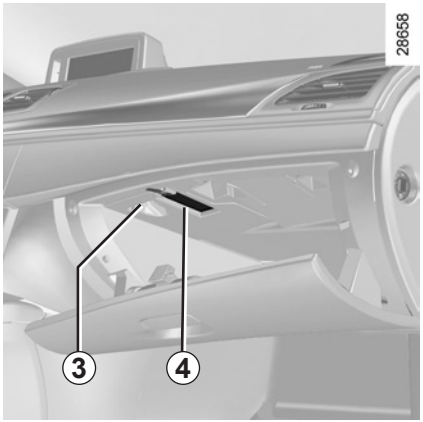

Glove box light

Open the access cover ***3***, you can then unclip the bulb holder more easily ***4***.

Bulb type: C5W.

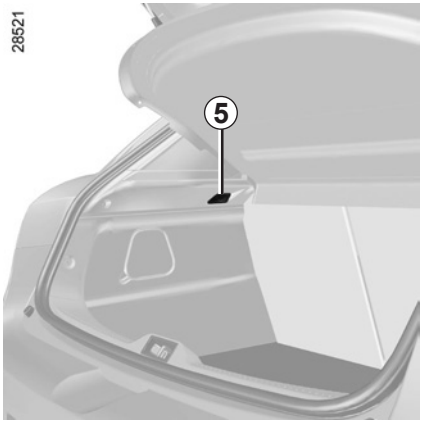

Luggage compartment light

Unclip the light at ***5*** using a flat-blade screwdriver or similar.

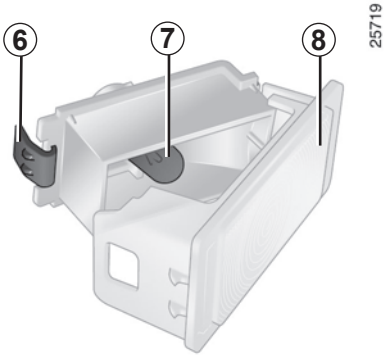

Disconnect the light.

Press tab ***6*** to release lens ***8*** and access bulb ***7***.

Bulb type: W5W.

The bulbs are under pressure and can break when replaced.

Risk of injury.

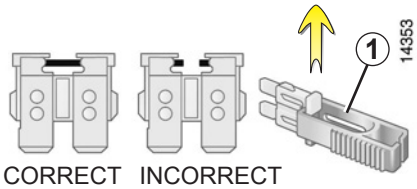

Fuse box

If any electrical component does not work, check the condition of the fuses.

Unclip cover ***A*** or ***B*** (depending on vehicle).

In accordance with local legislation or as a precautionary measure:

Obtain an emergency kit containing a set of spare bulbs and fuses from an approved Dealer.

Check the fuse in question and **replace it,** if necessary, **by a fuse of the same rating**.

If a fuse is fitted where the rating is too high, it may cause the electrical circuit to overheat (risk of fire) in the event of an item of equipment using an excessive amount of current.

Tweezers *1*

Remove the fuse using tweezers ***3***, located at the back of cover ***A*** or ***B***.

To remove the fuse from the tweezers, slide the fuse to the side.

It is not advisable to use the free fuse locations.

30861

	③ 25 A	⑦ 10 A	⑩ 25 A	⑭ 10 A
	④ 30 A	⑧ 3 A	⑪ 25 A	⑮ 5 A
① 30 A	⑤ 10 A	⑨ 15 A	⑫ 5 A	⑯ 10 A
② 10 A	⑥ 15 A		⑬ 25 A	⑰ 10 A
				⑱ 10 A
				⑲ 10 A

Allocation of fuses

(the presence of certain fuses depends on the vehicle equipment level)

1 Electronic parking brake;

2 Brake lights;

3 Automatic door locking;

4 Driver's electric window;

5 Passenger compartment unit;

6 Direction indicator lights;

7 Navigation system;

8 Interior rear-view mirror;

9 Rear screen wiper;

10 and ***11*** Rear electric windows;

12 ABS/ESP;

13 Passenger electric window;

14 Windscreen washer;

15 Heated door mirrors;

16 Radio;

17 Luggage compartment accessories socket;

18 Rear seat accessories socket;

19 Cigarette lighter.

Some accessories are protected by fuses located in the engine compartment in fuse box ***C***.

However, because of their reduced accessibility, we advise you to have your fuses replaced by an approved Dealer.

To avoid all risk of sparks:

- Ensure that any electrical consumers (courtesy lights, etc.) are switched off before disconnecting or reconnecting the battery.
- When charging, stop the charger before connecting or disconnecting the battery.
- Do not place metal objects on the battery to avoid creating a short circuit between the terminals.
- Always wait at least one minute after the engine has been switched off before disconnecting a battery.
- Make sure that you reconnect the battery terminals after refitting.

Connecting a battery charger

The battery charger must be compatible with a battery with nominal voltage of 12 volts.

Do not disconnect the battery when the engine is running. **Follow the instructions given by the manufacturer of the battery charger you are using.**

Special procedures may be required to charge some batteries. Contact your approved dealer.

Avoid all risk of sparks which may cause an immediate explosion, and charge the battery in a well-ventilated area. Risk of serious injury.

Handle the battery with care as it contains sulphuric acid, which must not come into contact with eyes or skin. If it does, wash the affected area with plenty of cold water. If necessary, consult a doctor.

Ensure that naked flames, red hot objects and sparks do not come into contact with the battery as there is a risk of explosion.

The engine may be hot when carrying out operations in close proximity. In addition, the engine cooling fan can come on at any moment.

Risk of injury.

Starting the vehicle using the battery from another vehicle

If you have to use the battery from another vehicle to start, obtain suitable jump leads (with a large cross section) from an approved dealer or, if you already have jump leads, ensure that they are in perfect condition.

The two batteries must have an identical nominal voltage of 12 volts. The battery supplying the current should have a capacity (amp-hours, Ah) which is at least the same as that of the discharged battery.

Ensure that there is no risk of contact between the two vehicles (risk of short circuiting when the positive terminals are connected) and that the discharged battery is properly connected. Switch off your vehicle ignition.

Start the engine of the vehicle supplying the current and run it at an intermediate engine speed.

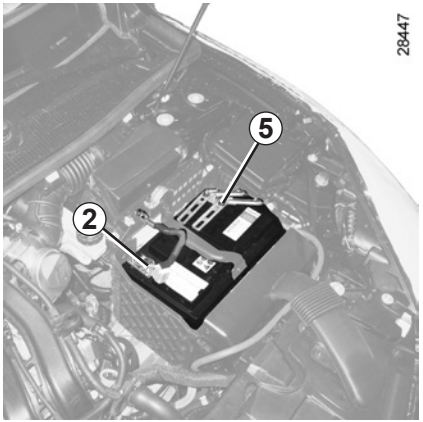

Attach positive lead ***A*** to **mounting *1*** attached to (+) terminal ***2*** then to (+) **terminal *3*** of the battery supplying the current.

Attach the negative lead ***B*** to the (–) **terminal *4*** of the battery supplying the current, then to the (–) **terminal *5*** of the discharged battery.

Start the engine. As soon as it is running, disconnect leads ***A*** and ***B*** in the reverse order **(*5 - 4 - 3 - 2*).**

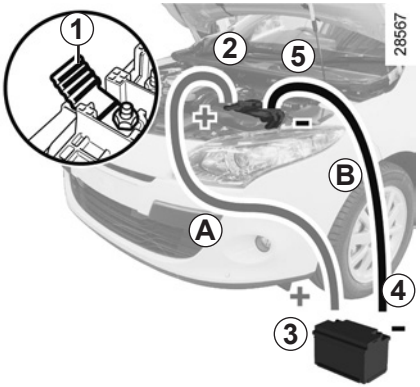

Check that there is no contact between leads ***A*** and ***B*** and that the positive lead ***A*** is not touching any metal parts on the vehicle supplying the current.

Risk of injury and/or damage to the vehicle.

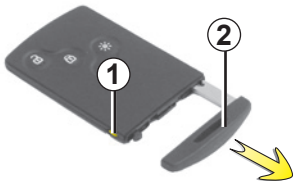

Replacing the battery

When the message “Low card battery” appears on the instrument panel, replace the RENAULTcard battery, press button ***1***, pulling on emergency key ***2***, then unclip cover ***3*** using tab ***4***.
Remove the battery by pressing on one side (movement ***A***) and by lifting the other (movement ***B***) then replace it, ensuring the polarity and model, shown on cover ***3*** are respected.

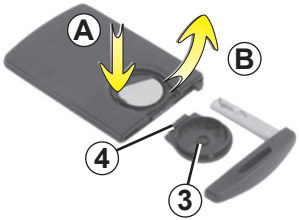

When refitting, proceed in the reverse order, then press one of the buttons on the card four times, close to the vehicle: the next time the vehicle is started, the message will disappear.

Note: it is not advisable to touch the electronic circuit or contacts on the RENAULT card when replacing the battery.

Check that the cover is clipped shut.

Operating faults

If the battery is too weak to ensure correct operation, you may start (insert the RENAULT card in the card reader) and lock/unlock the vehicle (refer to the information on “Locking/unlocking the doors” in Section 1).

The batteries are available from approved Dealers, and their service life approximately two years. Check that there is no dye on the battery: risk of an incorrect electrical contact.

Do not throw away your used batteries; give them to an organisation responsible for collecting and recycling batteries.

FITTING A RADIO

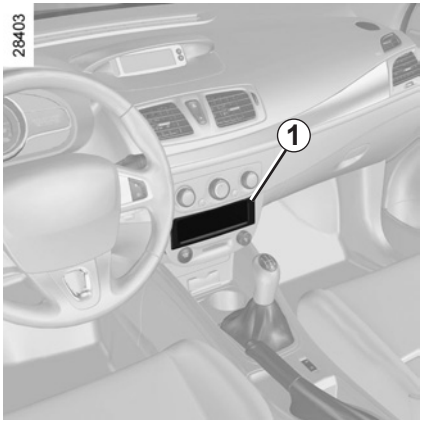

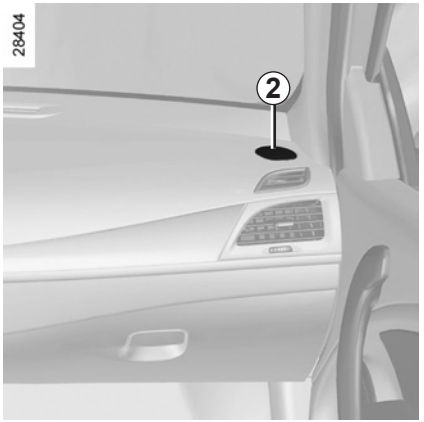

If your vehicle is not fitted with an audio system, one can be fitted and locations have been provided for:

– the radio ***1***;
– tweeter speakers ***2***;
– bass speakers ***3***.

To install any equipment, please consult an approved dealer.

Radio location *1*

Unclip the blanking cover. The aerial, + and – supply and speaker wire connections are located behind it.

– In all cases, it is very important to follow the manufacturer's instructions carefully.
– The specifications of the brackets and wires (available from our network) vary depending on the equipment level of your vehicle and the type of radio.

  Consult an approved Dealer to find out the correct part number.
– No work may be carried out on the vehicle's electrical or radio circuits, except by approved dealers: an incorrectly connected system may result in damage being caused to the electrical equipment and/or the components connected to it.

Before fitting an electrical or electronic device (particularly for transmitters/receivers: frequency bandwidth, power level, position of the aerial etc.), ensure that it is compatible with your vehicle.

Contact an approved dealer for this information.

Use of transmission/ receiving devices (telephones, CB equipment etc.).

Telephones and CB equipment with integrated aerials may cause interference to the original electronic systems fitted to the vehicle: it is advisable only to use equipment with an external aerial.

Furthermore, we remind you of the need to comply with the legislation in force concerning the use of such equipment.

Fitting after-market accessories

If you wish to install accessories on the vehicle: consult an approved dealer.

Also, to ensure the correct operation of your vehicle, and to avoid any risk to your safety, we recommend that you use only specific accessories, designed for your vehicle, which are the only accessories for which the manufacturer will provide a warranty.

If you are using an anti-theft device, only attach it to the brake pedal.

Electrical and electronic accessories

– Connect accessories with a maximum power of 120 Watts only.

Fire hazard.

– No work may be carried out on the vehicle's electrical or radio circuits, except by approved Dealers: an incorrectly connected system may result in damage being caused to the electrical equipment and/or the components connected to it;

– if the vehicle is fitted with any aftermarket electrical equipment, make sure that the unit is correctly protected by a fuse. Establish the rating and position of this fuse.

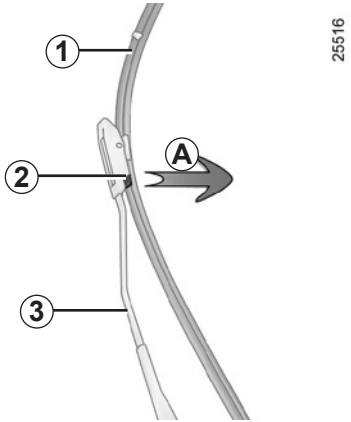

Replacing windscreen wiper blades *1*

With the ignition on and engine switched off, lower the windscreen wiper stalk completely: they stop slightly away from the bonnet.
Lift wiper arm ***3***, pull tab ***2*** (movement ***A***) and push the blade upwards.

To refit
Slide the blade along the arm until it clips on. Make sure that the blade is correctly locked in position. Return the windscreen wiper stalk to the park position.

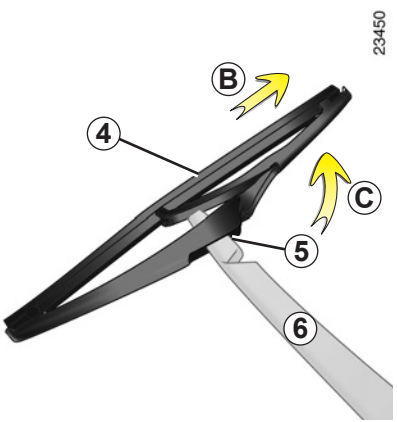

Rear screen wiper blade *4*

– Lift wiper arm ***6***;

– pivot blade ***4*** until some resistance is met (movement ***C***);

– depending on the vehicle, press tab ***5***, then remove the blade by pulling it (movement ***B***).

To refit

To refit the wiper blade, proceed in reverse order to removal. Make sure that the blade is correctly locked in position.

Check the condition of the wiper blades. You are responsible for their service life:
– clean the blades, windscreen and rear screen regularly with soapy water;
– do not use them when the windscreen or rear screen are dry;
– free them from the windscreen or rear screen when they have not been used for a long time.

– In frosty weather, make sure that the wiper blades are not stuck by ice (to avoid the risk of the motor overheating).

– Check the condition of the wiper blades.
Replace the wiper blades as soon as they begin to lose efficiency (approximately once a year).

Whilst changing the blade, take care not to drop the arm onto the window after it has been removed as this may break the window.

Before towing, unlock the steering column: with the clutch depressed, engage **first gear** (lever in position **N** or **R** for vehicles with automatic transmissions), insert the RENAULT card in the card reader then press the engine start button for **two seconds**.

Reposition the lever to neutral (position N for vehicles fitted with an automatic gearbox)

The steering column unlocks, the vehicle's accessory functions are powered, and you can use the vehicle lights (brake lights, hazard warning lights, etc.). At night, the vehicle must be lit.

Once you have finished towing, press the engine start button twice (risk of running down the battery).

Do not remove the RENAULT card from the reader when the vehicle is being towed.

The speed specified by current legislation for towing must always be observed. If your vehicle is the towing vehicle, do not exceed the maximum towing weight for your vehicle (refer to the information on "Weights" in Section 6).

Towing a vehicle with an automatic gearbox

With the engine switched off, the transmission is no longer lubricated. It is preferable to tow this type of vehicle on a trailer or tow it with the front wheels off the ground.

Under exceptional circumstances, you may tow the vehicle with all four wheels on the ground, only going forward, with the gear lever in the **N** position, and for a distance not exceeding 50 miles (80 km).

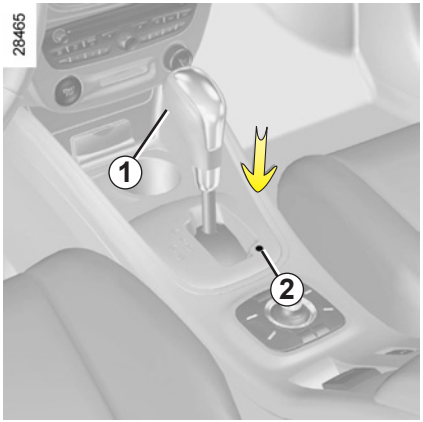

If the lever is stuck in **P**, even though you are depressing the brake pedal, the lever can be released manually. To do this, insert a rigid rod in the hole ***2***, press the rod and unlocking button ***1*** located on the lever simultaneously.

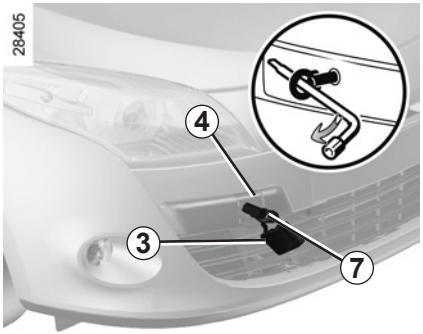

Only use:

- **At the rear, towing point *5***;
- **At the front, towing hitch *4*** (located in the tool kit).

These towing points may only be used for pulling the vehicle, never for lifting it either directly or indirectly.

When the engine is stopped, steering and braking assistance are not operational.

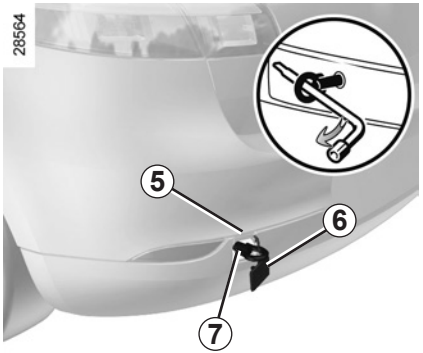

Access to towing points

Unclip cover ***3*** or ***6*** by sliding a flat tool (or the key integrated in the RENAULT card) under the cover.

Screw in towing hitch *7* fully: as much as possible by hand at first, then finish by tightening it using the wheelbrace.

Use only towing hitch ***7*** and the wheelbrace located under the luggage compartment carpet in the tool kit (refer to the information on the “Tool kit” in Section 5).

– Use a rigid towing bar. If a rope or cable is used (where the law allows this), the vehicle being towed must be able to brake.

– A vehicle must not be towed if it is not fit to be driven.

– Avoid accelerating or braking suddenly when towing, as this may result in damage being caused to the vehicle.

– When towing a vehicle, it is advisable not to exceed **30 mph (50 km/h)**.

Do not leave the tools unsecured inside the vehicle as they may come loose under braking.

OPERATING FAULTS (1/5)

The following advice will enable you to carry out quick, temporary repairs. For safety reasons you should always contact an approved dealer as soon as possible.

Using the RENAULT card	POSSIBLE CAUSES	WHAT TO DO
The RENAULT card does not lock or unlock the doors.	Card battery is flat.	Replace the battery. You can still lock/unlock and start your vehicle (refer to the information on “Locking/unlocking the doors” in Section 1 and “Starting/Stopping the engine” in Section 2).
	Use of appliances operating on the same frequency as the card (mobile phone, etc.).	Stop using the equipment or use the integrated key (refer to the information on “Locking/unlocking the doors” in Section 1).
	Vehicle located in a high electromagnetic radiation zone. Vehicle battery flat.	Use the key integrated in the card (refer to the information on “Locking/unlocking the doors” in Section 1).

OPERATING FAULTS (2/5)

The starter is activated	POSSIBLE CAUSES	WHAT TO DO
The instrument panel indicator lights are weak or fail to light up and the starter does not turn.	Battery terminals not tight, battery terminals disconnected or oxidised.	Retighten or reconnect the terminals, or clean them if they are oxidised.
	Discharged battery or not operational.	Connect another battery to the faulty battery. Refer to information on “Battery: troubleshooting” in Section 5 or replace the battery if necessary. Do not push the vehicle if the steering column is locked.
The engine will not start.	Starting conditions are not fulfilled.	Refer to the information on “Starting/stopping the engine” in Section 2.
	The hands-free RENAULT card does not work.	Insert the card in the card reader in order to start the engine. Refer to the information on “Starting/stopping the engine” in Section 2.
The engine cannot be switched off.	Card not detected.	Insert the card in card reader.
	Electronic fault.	Press the starter button quickly five times.

OPERATING FAULTS (3/5)

On the road	POSSIBLE CAUSES	WHAT TO DO
The steering column remains locked.	Steering wheel locked.	Move the steering wheel while pressing the engine start button (refer to the information on “Starting the engine” in Section 2).
Coolant boiling in the coolant reservoir.	Mechanical fault: damaged cylinder head gasket.	Stop the engine. Contact an approved dealer.
Smoke under the bonnet.	Short-circuit or cooling system leak.	Stop, switch off the ignition, stand away from the vehicle and contact an approved dealer.
The oil pressure warning light comes on:		
while cornering or braking	The level is too low.	Top up the engine oil level (refer to the information on “Engine oil level: topping up/filling” in Section 4).
is slow to go out or remains lit under acceleration	Loss of oil pressure.	Stop the vehicle and contact an approved dealer.
White smoke from the exhaust.	This is not necessarily a fault. Smoke may be caused by regeneration of the particle filter.	Refer to the information on “Special features of diesel versions” in Section 2.

OPERATING FAULTS (4/5)

On the road	POSSIBLE CAUSES	WHAT TO DO
Steering becomes heavy.	Assistance overheating.	Consult an approved dealer.
The engine overheats. The coolant temperature indicator is in the warning zone and warning light STOP comes on.	Engine cooling fan not working.	Stop the vehicle, switch off the engine and contact an approved dealer.
	Coolant leaks.	Check the coolant reservoir: it should contain fluid. If there is no coolant, consult an approved dealer as soon as possible.
Vibrations.	Tyres not inflated to correct pressures, incorrectly balanced or damaged.	Check the tyre pressures: if this is not the problem, have them checked by an approved dealer.

Radiator: If there is a significant lack of coolant, remember that it must never be topped up using cold coolant while the engine is very warm. After any procedure on the vehicle which has involved even partial draining of the cooling system, it must be refilled with a new mixture prepared in the correct proportions. Reminder: only products approved by our Technical Department may be used for this purpose.

OPERATING FAULTS (5/5)

Electrical equipment	POSSIBLE CAUSES	WHAT TO DO
The wipers do not work.	Wiper blades stuck.	Free the blades before using the wipers.
	Faulty electrical circuit.	Consult an approved dealer.
The wiper does not stop.	Faulty electrical controls.	Consult an approved dealer.
Direction indicators flashing more quickly.	Blown bulb.	Front: contact an approved dealer. Rear: replace the bulb.
The direction indicators do not work.	Faulty electrical circuit.	Consult an approved dealer.
The lights do not come on or go off.	Faulty electrical circuit or control.	Consult an approved dealer.
Traces of condensation in the lights.	Traces of condensation may be a natural phenomenon caused by variations in temperature. In this situation, these traces soon disappear when the lights are switched on.	

Section 6: Technical specifications

Vehicle identification plates 6.2
Engine identification plates 6.3
Dimensions 6.5
Engine specifications 6.8
Weights 6.9
Towing weights 6.9
Replacement parts and repairs 6.10
Service sheets 6.11
Anticorrosion check 6.17

VEHICLE IDENTIFICATION PLATES

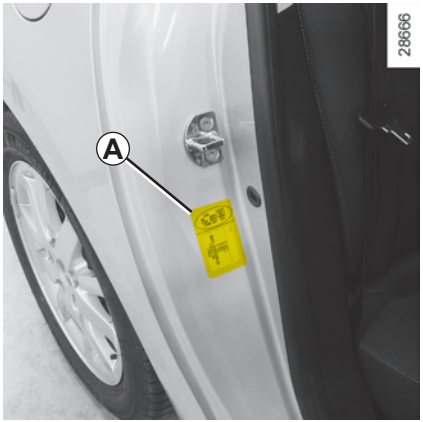

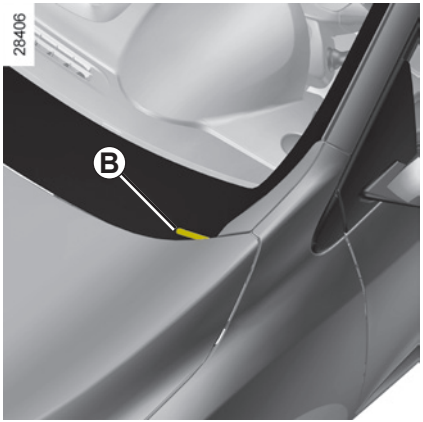

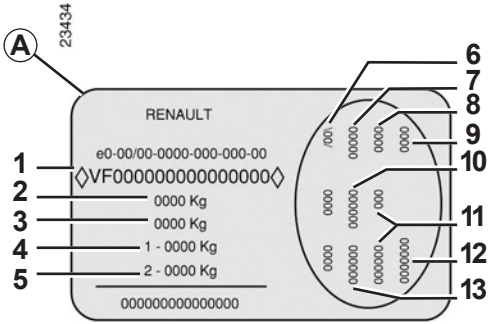

The information shown on the vehicle identification plate should be quoted on all correspondence or orders.

Vehicle identification plate *A*

1 Vehicle type and chassis number. **Depending on the vehicle, this information is also given on marking *B*.**

2 Maximum permissible all-up weight.

3 Total train weight (vehicle fully loaded, with trailer).

4 Maximum permissible weight, front axle.

5 Maximum permissible weight, rear axle.

6 Technical specifications of vehicle.

7 Vehicle paint reference.

8 Equipment level.

9 Vehicle type.

10 Trim code.

11 Additional equipment specification.

12 Fabrication number.

13 Interior trim code.

ENGINE IDENTIFICATION PLATES (1/2)

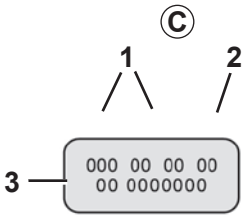

27193

The information on the engine plate (or label) *C* should be quoted on all your correspondence or orders.
(Location varies depending on engine)

1 Engine type.
2 Engine suffix.
3 Engine number.

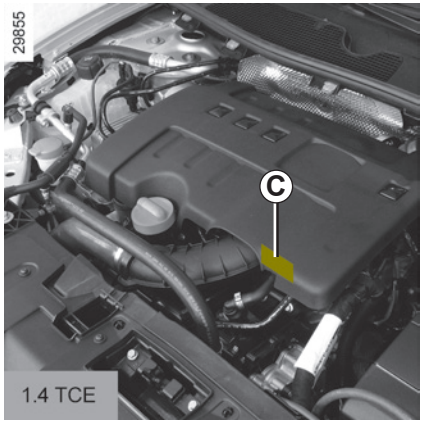

28855

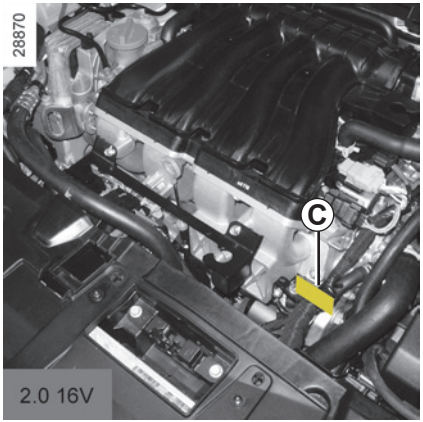

28870

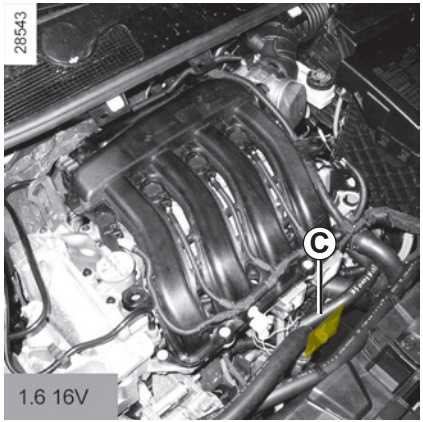

28543

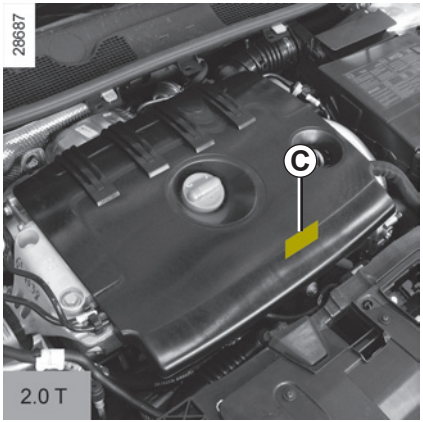

28687

ENGINE IDENTIFICATION PLATES (2/2)

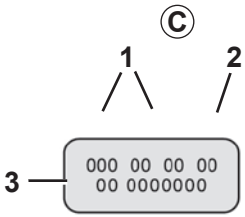

27193

The information on the engine plate (or label) *C* should be quoted on all your correspondence or orders.
(Location varies depending on engine)

1 Engine type.
2 Engine suffix.
3 Engine number.

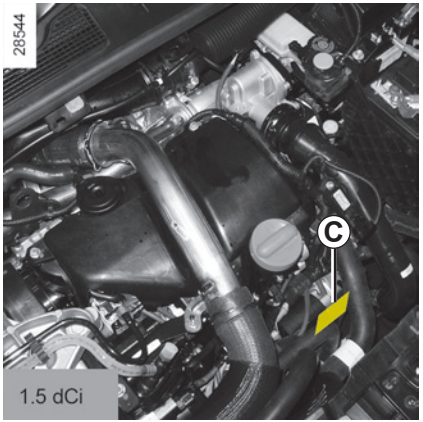

28544

1.5 dCi

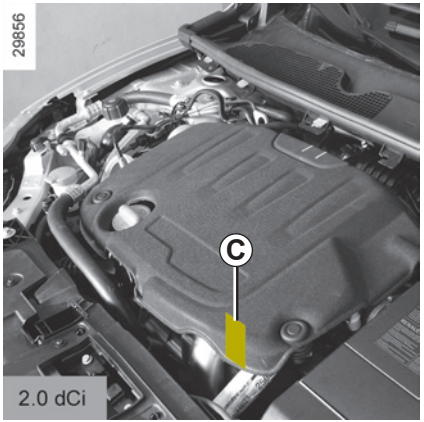

29856

2.0 dCi

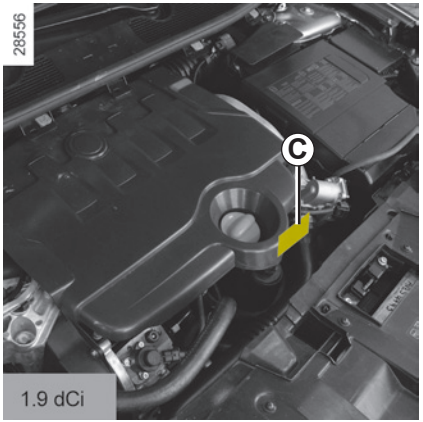

28556

1.9 dCi

DIMENSIONS (in metres) (1/3)

Three door version

28693

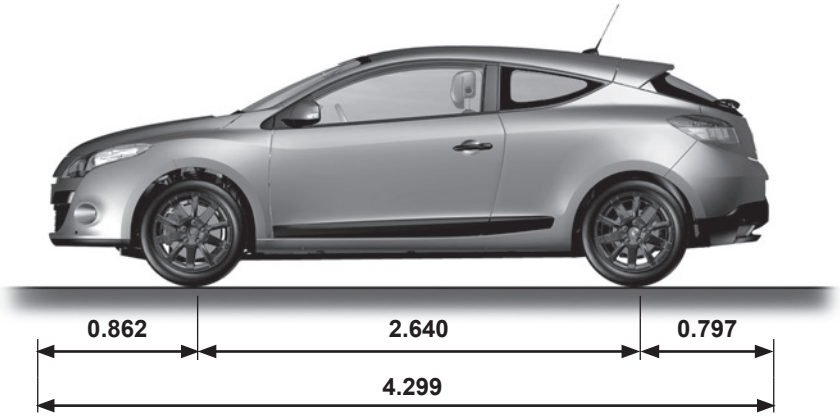

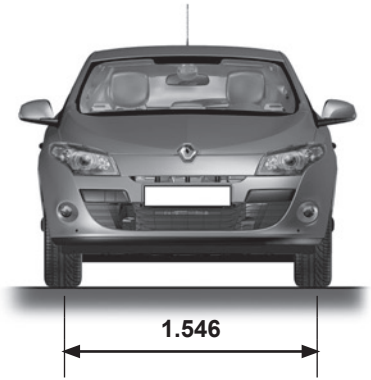

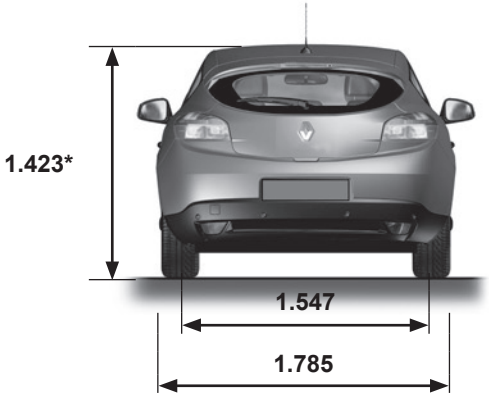

* Unladen

DIMENSIONS (in metres) (2/3)

Five door version

28536

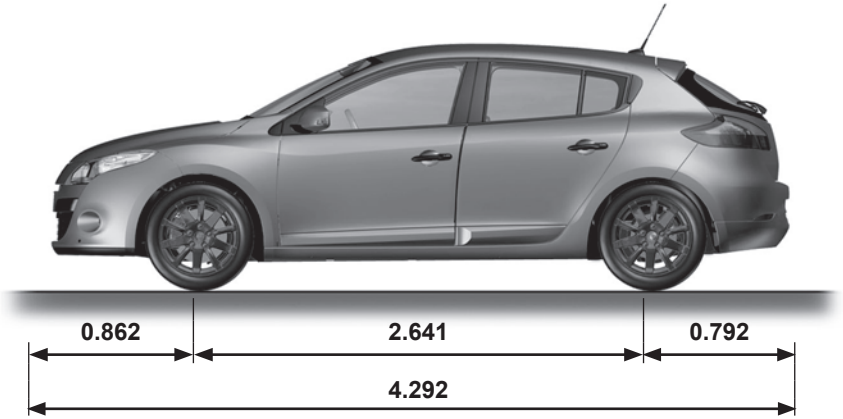

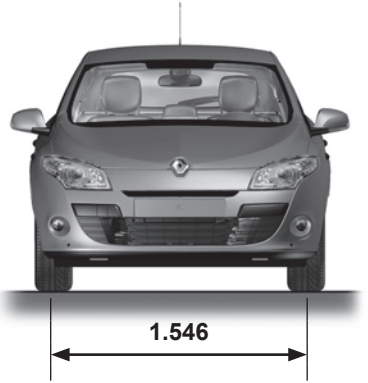

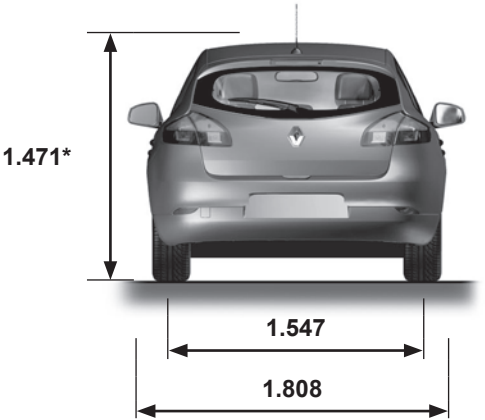

* Unladen

DIMENSIONS (in metres) (3/3)

Sport tourer versions

29648

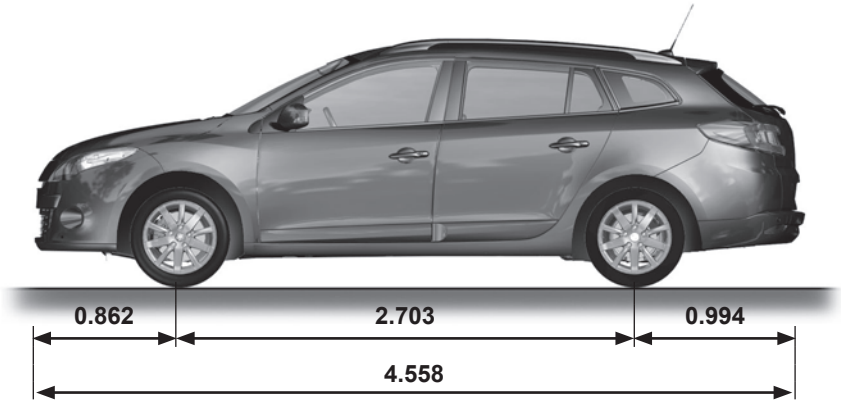

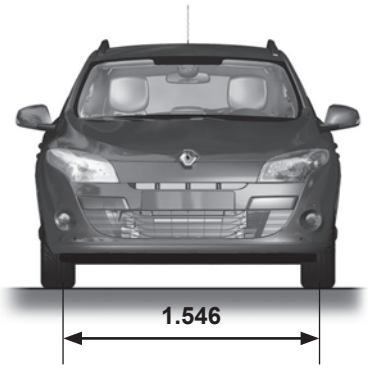

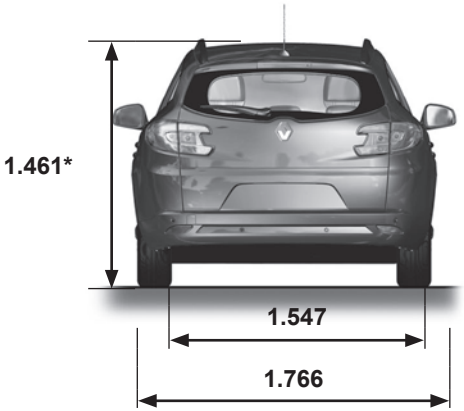

* Unladen

ENGINE SPECIFICATIONS

Versions	1.4 TCe	1.6 16V	2.0 16V	2.0 T	1.5 dCi	1.9 dCi	2.0 dCi
Engine type (see engine plate)	H4J Turbo	K4M	M4R	F4R Turbo	K9K	F9Q	M9R
Cubic capacity (cc)	1,395	1,598	1,998	1,998	1,461	1,870	1,995
Type of fuel **Octane Rating**	It is **essential** that you use unleaded petrol of the octane rating stated on the label inside the fuel filler flap. If not available, for a limited time only, use unleaded fuel: – with an octane rating of 91 for a label showing 95 or 98; – with an octane rating of 87 for a label showing 91, 95 or 98.				Diesel The label located in the fuel filler flap indicates authorised fuels.		
Spark plugs	Only use the spark plugs specified for your vehicle's engine. The type should be marked on a label affixed inside the engine compartment. If it is not then contact your approved dealer. Fitting spark plugs which are not to specification may damage the engine.						

WEIGHTS (in kg)

The weights indicated for a basic vehicle without options: they vary depending on the your vehicle's equipment. Consult your approved Dealer.

Maximum permissible all-up weight (MMAC) **Total train weight (MTR)**	Weights are indicated on the vehicle identification plate (refer to the information on "Vehicle identification plates" in Section 6)
Braked trailer weight	found by calculating: **MTR - MMAC**
Unbraked trailer weight	650
Permissible nose weight	75
Permissible load on the roof with the carrying device	80 kg (including the carrying device)

Towing weight (Towing a caravan, boat, etc.)

– It is important to comply with the towing weights, governed by local legislation in each country and, in particular, laid down in the Road Traffic Regulations. Contact an approved Dealer about any towing equipment.

– When towing, under no circumstances may **the total train weight (vehicle + trailer) be exceeded**. However the following is permitted:

  – the Maximum permissible weight at the rear may be exceeded by no more than 15%,
  – the maximum permissible all-up weight may be exceeded by no more than 10% or 100 kg (whichever occurs first).

In either case, the maximum speed of the towing assembly must not exceed 60 mph (100 km/h) and the tyre pressure must be increased by 0.2 bar (3 PSI).

– The engine output and climbing capability are reduced with altitude. We recommend that the maximum load be reduced by 10% at an altitude of 1,000 metres and by an additional 10% for each 1,000 metres thereafter.

REPLACEMENT PARTS AND REPAIRS

Original parts are based on strict specifications and are subject to highly-specialised tests. Therefore, they are of at least the same level of quality as the parts fitted originally.

If you always fit genuine replacement parts to your vehicle, you will ensure that it performs well. Furthermore, repairs carried out within the manufacturer's Network using original parts are guaranteed according to the conditions set out on the reverse of the repair order.

SERVICE SHEETS (1/6)

VIN: .....

Date: Miles (km):	Invoice number:	Comments/miscellaneous
Type of operation: Service □ ..... □ **Anticorrosion check:** OK □ Not OK* □ *See specific page	**Stamp**	

Date: Miles (km):	Invoice number:	Comments/miscellaneous
Type of operation: Service □ ..... □ **Anticorrosion check:** OK □ Not OK* □ *See specific page	**Stamp**	

Date: Miles (km):	Invoice number:	Comments/miscellaneous
Type of operation: Service □ ..... □ **Anticorrosion check:** OK □ Not OK* □ *See specific page	**Stamp**	

SERVICE SHEETS (2/6)

VIN: .....

Date: Miles (km):	Invoice number:	Comments/miscellaneous
Type of operation: Service □ ..... □ **Anticorrosion check:** OK □ Not OK* □ *See specific page	**Stamp**	

Date: Miles (km):	Invoice number:	Comments/miscellaneous
Type of operation: Service □ ..... □ **Anticorrosion check:** OK □ Not OK* □ *See specific page	**Stamp**	

Date: Miles (km):	Invoice number:	Comments/miscellaneous
Type of operation: Service □ ..... □ **Anticorrosion check:** OK □ Not OK* □ *See specific page	**Stamp**	

SERVICE SHEETS (3/6)

VIN: .....

Date: Miles (km):	Invoice number:	Comments/miscellaneous
Type of operation: Service □ ..... □ **Anticorrosion check:** OK □ Not OK* □ *See specific page	**Stamp**	

Date: Miles (km):	Invoice number:	Comments/miscellaneous
Type of operation: Service □ ..... □ **Anticorrosion check:** OK □ Not OK* □ *See specific page	**Stamp**	

Date: Miles (km):	Invoice number:	Comments/miscellaneous
Type of operation: Service □ ..... □ **Anticorrosion check:** OK □ Not OK* □ *See specific page	**Stamp**	

SERVICE SHEETS (4/6)

VIN: .....

Date: Miles (km):	Invoice number:	Comments/miscellaneous
Type of operation: Service □ ..... □ **Anticorrosion check:** OK □ Not OK* □ *See specific page	**Stamp**	

Date: Miles (km):	Invoice number:	Comments/miscellaneous
Type of operation: Service □ ..... □ **Anticorrosion check:** OK □ Not OK* □ *See specific page	**Stamp**	

Date: Miles (km):	Invoice number:	Comments/miscellaneous
Type of operation: Service □ ..... □ **Anticorrosion check:** OK □ Not OK* □ *See specific page	**Stamp**	

SERVICE SHEETS (5/6)

VIN: .....

Date: Miles (km):	Invoice number:	Comments/miscellaneous
Type of operation: Service □ ..... □ **Anticorrosion check:** OK □ Not OK* □ *See specific page	**Stamp**	

Date: Miles (km):	Invoice number:	Comments/miscellaneous
Type of operation: Service □ ..... □ **Anticorrosion check:** OK □ Not OK* □ *See specific page	**Stamp**	

Date: Miles (km):	Invoice number:	Comments/miscellaneous
Type of operation: Service □ ..... □ **Anticorrosion check:** OK □ Not OK* □ *See specific page	**Stamp**	

SERVICE SHEETS (6/6)

VIN: .....

Date: Miles (km):	Invoice number:	Comments/miscellaneous
Type of operation: Service □ ..... □ **Anticorrosion check:** OK □ Not OK* □ *See specific page	**Stamp**	

Date: Miles (km):	Invoice number:	Comments/miscellaneous
Type of operation: Service □ ..... □ **Anticorrosion check:** OK □ Not OK* □ *See specific page	**Stamp**	

Date: Miles (km):	Invoice number:	Comments/miscellaneous
Type of operation: Service □ ..... □ **Anticorrosion check:** OK □ Not OK* □ *See specific page	**Stamp**	

ANTICORROSION CHECK (1/6)

If the continuation of the warranty is subject to repair, it is indicated below.

VIN: .....

Corrosion repair operation to be carried out: Date of repair:		**Stamp**
Repair to be carried out: Date of repair:		**Stamp**
Repair to be carried out: Date of repair:		**Stamp**

ANTICORROSION CHECK (2/6)

If the continuation of the warranty is subject to repair, it is indicated below.

VIN: .....

Corrosion repair operation to be carried out: Date of repair:		**Stamp**
Repair to be carried out: Date of repair:		**Stamp**
Repair to be carried out: Date of repair:		**Stamp**

ANTICORROSION CHECK (3/6)

If the continuation of the warranty is subject to repair, it is indicated below.

VIN: .....

Corrosion repair operation to be carried out: Date of repair:	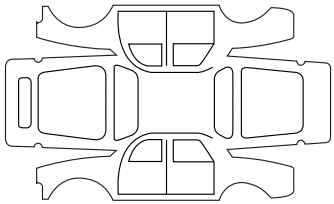	**Stamp**
Repair to be carried out: Date of repair:	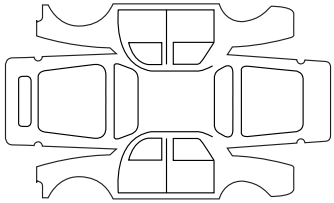	**Stamp**
Repair to be carried out: Date of repair:	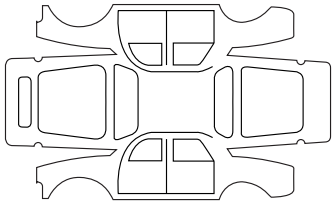	**Stamp**

ANTICORROSION CHECK (4/6)

If the continuation of the warranty is subject to repair, it is indicated below.

VIN: .....

Corrosion repair operation to be carried out: Date of repair:		**Stamp**
Repair to be carried out: Date of repair:		**Stamp**
Repair to be carried out: Date of repair:		**Stamp**

ANTICORROSION CHECK (5/6)

If the continuation of the warranty is subject to repair, it is indicated below.

VIN: .....

Corrosion repair operation to be carried out: Date of repair:		**Stamp**
Repair to be carried out: Date of repair:		**Stamp**
Repair to be carried out: Date of repair:		**Stamp**

ANTICORROSION CHECK (6/6)

If the continuation of the warranty is subject to repair, it is indicated below.

VIN: .....

Corrosion repair operation to be carried out: Date of repair:		**Stamp**
Repair to be carried out: Date of repair:		**Stamp**
Repair to be carried out: Date of repair:		**Stamp**

ALPHABETICAL INDEX (1/5)

A

ABS ....1.51, 2.19 → 2.22
accessories....5.29
accessories socket 3.21
additional methods of restraint ....1.25 → 1.28, 1.31
side protection 1.30
to the front seat belts ....1.25 → 1.28
to the rear seat belts ....1.25 → 1.29
adjusting your driving position ....1.15 – 1.16, 1.22
advice on antipollution ....2.12 → 2.14
air bag....1.25 → 1.31, 1.51
activating the front passenger air bags 1.45
deactivating the front passenger air bags 1.43
air conditioning ....3.4 → 3.11
air vents ....3.2 – 3.3
anti-corrosion check ....6.17 → 6.22
anti-corrosion protection ....4.12 – 4.13
anti-lock braking system: ABS ....2.19 → 2.22
antipollution
advice 2.12
armrest:
front....3.18
ashtray....3.21
ASR (traction control) ....2.19 → 2.22
audible and visual signals....1.70
automatic gearbox (use)....2.33 → 2.35
automatic gearbox selector lever....2.33 → 2.35

B

battery....1.52, 4.11
troubleshooting ....5.25 – 5.26
bonnet....4.2
brake fluid 4.8
bulbs
changing ....5.12 → 5.20

C

catalytic converter....2.6 – 2.7
central door locking ....1.8, 1.12 → 1.14
changing a bulb ....5.12 → 5.20
changing a wheel....5.7 – 5.8
changing gear....2.8, 2.33 → 2.35
child restraint/seat ....1.32 – 1.33, 1.35 → 1.45
child safety....1.2, 1.6, 1.11, 1.32 – 1.33, 1.35 → 1.45, 3.12
child seats....1.32 – 1.33, 1.35 → 1.42
children ....1.10 – 1.11, 1.32 – 1.33, 1.33
children (safety)....1.2, 1.6, 1.11, 3.12
cigar lighter 3.21
clock 1.68
closing the doors ....1.10 → 1.13
control instruments ....1.50 → 1.65
controls ....1.46 → 1.49
coolant....1.54, 4.7
courtesy light ....3.15 – 3.16, 5.21 – 5.22
courtesy mirrors....3.16
cruise control ....1.51, 2.23 → 2.29
cruise control-speed limiter....2.23 → 2.29
customised vehicle settings....1.66
customising the vehicle settings 1.66

D

dashboard....1.46 → 1.49
daytime running lights....1.71
deadlocking the doors 1.8
dimensions ....6.5 → 6.7
dipstick....4.4
display ....1.50 → 1.55
doors....1.10 – 1.11, 1.14
doors/tailgate ....1.8, 1.10 – 1.11, 1.14
driver’s position ....1.46 → 1.53
driving....2.2 – 2.4, 2.6 → 2.14, 2.16 → 2.35

driving position
settings ....1.22 → 1.24

E
electric beam height adjustment 1.74
electric windows ....3.12 → 3.14
electronic parking brake ....2.9 → 2.11
Electronic Stability Program: ESP ....2.19 → 2.22
emergency brake assist....2.19 → 2.22
emergency braking....2.19 → 2.22
emergency key .... 1.2 – 1.3
emergency spare wheel 5.2, 5.6
engine oil ....1.52, 4.3 → 4.6
engine oil capacity .... 4.5 – 4.6
engine oil level....4.3 → 4.6
engine start/stop button ....2.3 → 2.5
environment.... 2.15
ESP: Electronic Stability Program ....2.19 → 2.22
external temperature 1.68

F
faults
operating faults ....5.33 → 5.37
filter
air filter 4.9
diesel filter.... 4.9
oil filter 4.6, 4.9
particle filter 1.51
passenger compartment filter 4.9
fitting a radio 5.28
fittings ....3.17 → 3.20
fog lights 5.14
front passenger air bag deactivation 1.43
front seat
driver's position memory.... 1.20
front seat adjustment.... 1.17 – 1.18
front seats
adjustment ....1.15, 1.17 – 1.18, 1.22 → 1.24
with electric controls 1.19
with manual controls 1.17
fuel
advice on fuel economy 2.12
capacity.... 1.78
filling.... 1.50, 1.78 – 1.79
grade.... 1.78 – 1.79
fuel economy ....2.12 → 2.14
fuel filler cap .... 1.78 – 1.79
fuel level 1.54
fuel tank
capacity.... 1.78 – 1.79
fuel tank capacity.... 1.78 – 1.79
fuses .... 5.23 – 5.24

G
gear lever.... 2.8
glove box 3.19

H
handbrake.... 1.50, 2.8
hands-free telephone integrated control.... 3.36
hazard warning lights signal .... 1.70 – 1.71
headlight beam adjustment 1.74
headlight flashers 1.70
headlight washer 1.76
headrest.... 1.15 – 1.16
heating and air conditioning system 3.11
heating system ....3.4 → 3.10
hill start 2.22
Hill Start Assistance (HSA).... 2.22
horn 1.70
horn:
flash 1.70

sounding the horn 1.70
hubcap tool 5.6

I
indicators ..... 1.50, 1.70, 5.12 – 5.13
indicators:
direction indicators 1.70, 5.15
exterior temperature indicator 1.68
instrument panel ..... 1.50 → 1.65
instrument panel ..... 1.50 → 1.65, 1.71
instrument panel messages ..... 1.56 → 1.65
interior trim
maintenance 4.14

J
jack 5.6

L
levels:
brake fluid 4.8
coolant 1.54, 4.7
fuel 1.54
windscreen washer reservoir 4.9
lifting the vehicle
changing a wheel ..... 5.7 – 5.8
lighting:
exterior ..... 1.71 → 1.73
instrument panel 1.71
interior ..... 3.15 – 3.16, 5.21 – 5.22
lights
additional 5.14
adjustment 1.74
changing bulbs ..... 5.12 – 5.13
fog lights 5.14
front ..... 5.12 – 5.13
mobile directional 1.72
lights:
adjusting 1.74
brake lights 5.15
dipped beam headlights ..... 1.50, 1.71, 5.12 – 5.13
direction indicators ..... 1.50, 1.70, 5.12 – 5.13, 5.15
fog lights ..... 1.50, 1.73, 5.14 – 5.15
hazard warning 1.70
main beam headlights ..... 1.50, 1.72, 5.12 – 5.13
number plate lights 5.20
reversing lights 5.15
side lights 1.71, 5.15
locking the doors ..... 1.2 → 1.11, 1.14
luggage compartment cover ..... 3.27 – 3.28
luggage retaining net ..... 3.33 – 3.34

M
maintenance:
bodywork ..... 4.12 – 4.13
interior trim 4.14
mechanical ..... 4.2, 6.11 → 6.16
mileage before service ..... 6.11 → 6.16
map reading lights ..... 3.15 – 3.16
menu for customising the vehicle settings 1.66
methods of restraint in addition to the front seat belts ..... 1.25 → 1.28
methods of restraint in addition to the seat belts ... 1.25 → 1.31
multimedia equipment 3.36

N
navigation 3.36
navigation system 3.36

O
oil change ..... 4.3 → 4.6
opening the doors ..... 1.10 → 1.13
operating faults ..... 1.50 → 1.53, 5.33 → 5.37

P
paintwork
maintenance ..... 4.12 – 4.13
parking distance control ..... 2.30 → 2.32
power-assisted steering 1.67
pretensioners 1.25
puncture ..... 5.2, 5.6 → 5.8

R
radio 3.36
fitting a radio 5.28
rear bench seat ..... 3.22 → 3.24
rear parcel shelf ..... 3.26 → 3.28
rear screen de-icing/demisting 3.5, 3.9
rear seats
functions ..... 3.22 → 3.24
rear view mirrors 1.69
RENAULT ANTI-INTRUDER DEVICE (RAID) 1.14
RENAULT card
battery 5.27
use ..... 1.2 → 1.9
RENAULT card battery 5.27
replacement parts 6.10
reverse gear
selecting ..... 2.8, 2.33 → 2.35
reversing sensor ..... 2.30 → 2.32
roof bars 3.35
roof rack
roof bars 3.35
running in 2.2

S
screen wash/wipe 1.77
seat belt pretensioners ..... 1.25 → 1.28
front seat belt ..... 1.25 → 1.28
seat belts ..... 1.22 → 1.28, 1.30 – 1.31, 1.52
see-me-home lighting 1.72, 1.74
service sheets ..... 6.11 → 6.16
side indicator lights
changing bulbs 5.20
side protection devices 1.30
signals and lights ..... 1.71 → 1.74
speakers
location 5.28
special features of diesel versions 2.7
special features of petrol vehicles 2.6
speed limiter ..... 1.51, 2.23 → 2.25
starting the engine ..... 2.3 – 2.4
steering wheel
adjustment 1.67
stopping the engine 2.5
storage compartment ..... 3.17 → 3.20
storage compartments ..... 3.17 → 3.20, 3.29 → 3.31
storing the driver’s seat position 1.20
sun visor 3.16
sunroof ..... 3.12 → 3.14
switching on the vehicle ignition 2.4

T
tailgate ..... 3.25 – 3.26, 3.29 → 3.31, 3.33 – 3.34
tanks and reservoirs
brake fluid 4.8
coolant 4.7
tanks and reservoirs:
windscreen washer 4.9
technical specifications ..... 6.3 → 6.7, 6.9 – 6.10
telephone 3.36
temperature regulation ..... 3.6 → 3.10
tool kit 5.6
towing
breakdown ..... 5.31 – 5.32
towing equipment 3.32

towing a caravan 3.32, 6.9
towing equipment
fitting 3.32
towing hitch..... 5.31 – 5.32
towing rings ..... 1.35 – 1.36, 3.32
towing weights 6.9
traction control: ASR.....2.19 → 2.22
transporting children .....1.32 – 1.33, 1.35 → 1.45
transporting objects
in the luggage compartment .....3.32 → 3.34
luggage net ..... 3.33 – 3.34
trims 5.6
trip computer and warning system... 1.50 → 1.53, 1.56 → 1.65
tyre inflation kit.....5.3 → 5.5
tyre pressure.....2.16 → 2.18, 4.10, 5.10
tyre pressure monitor.....2.16 → 2.18
tyre pressures 4.10
tyres..... 2.16 → 2.18, 4.10, 5.9 → 5.11

U
unlocking the doors ..... 1.12 – 1.13

V
variable power-assisted steering 1.51
vehicle identification plates..... 6.3 – 6.4
ventilation .....3.4 → 3.10

W
warning buzzer 1.10, 1.52, 1.70, 1.72
warning lights..... 1.50 → 1.53, 1.56 → 1.65
washing ..... 4.12 – 4.13
weights 6.9
wheelbrace 5.6
wheels (safety) .....5.9 → 5.11
windscreen de-icing/demisting 3.5, 3.9
windscreen washer.....1.75 → 1.77, 4.9
windscreen washer/wiper ..... 1.75 – 1.76
wiper blades 5.30
wipers .....1.75 → 1.77
blades 5.30

4 SIMPLE ACTIONS*
FOR YOUR SAFETY

1

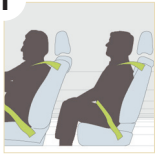

- **Always fasten your seat belt,**
  - **even for short journeys**
  - **even if your vehicle is fitted with air bags.**
- **Make sure that all passengers have fastened their seat belts, even in the back.**

2

- **Always secure children using devices suitable for their size and weight (seat, shell seat, etc.).**
- **Important! If the vehicle is fitted with front passenger air bags which can be disconnected, disconnect them before installing a rear-facing baby seat.**

3

- **Adjust the height of the seat belt according to your size.**
- **Adjust the angle of your seatback ensuring that the seat belt remains in contact with your body.**
- **Adjust the height of the headrest: headrest height = top of your head. Headrest as close as possible to the head.**

4

- **Place heavy objects or luggage at the back of the luggage compartment.**
- **Distribute the load between the right-hand and left-hand sides in the loading area when transporting goods.**

* Warning: these actions do not constitute an exhaustive list. Refer to your Driver's Handbook for more information.

(www.e-guide.renault.com)

RENAULT S.A.S. SOCIÉTÉ PAR ACTIONS SIMPLIFIÉE AU CAPITAL DE 533 941 113 € / 13-15, QUAI LE GALLO
92100 BOULOGNE-BILLANCOURT R.C.S. NANTERRE 780 129 987 — SIRET 780 129 987 03591 / TÉL. : 0810 40 50 60
NU 837-6– 99 91 052 47R – 05/2010 – Edition anglaise

YN