2019

Silverado 4500HD/5500HD/6500HD Owner's Manual

chevrolet.com

Contents

Introduction 2
In Brief 5
Keys, Doors, and Windows 29
Seats and Restraints 45
Storage 91
Instruments and Controls 94
Lighting 130
Infotainment System 139
Climate Controls 184
Driving and Operating 190
Vehicle Care 285
Service and Maintenance 352
Technical Data 400
Customer Information 407
Reporting Safety Defects 417
OnStar 421
Connected Services 429
Index 433

Introduction

The names, logos, emblems, slogans, vehicle model names, and vehicle body designs appearing in this manual including, but not limited to, GM, the GM logo, CHEVROLET, the CHEVROLET Emblem, and SILVERADO are trademarks and/or service marks of General Motors LLC, its subsidiaries, affiliates, or licensors.

For vehicles first sold in Canada, substitute the name “General Motors of Canada Company” for Chevrolet Motor Division wherever it appears in this manual.

This manual describes features that may or may not be on the vehicle because of optional equipment that was not purchased on the vehicle, model variants, country specifications, features/applications that may not be available in your region, or changes subsequent to the printing of this owner’s manual.

Refer to the purchase documentation relating to your specific vehicle to confirm the features.

Keep this manual in the vehicle for quick reference.

Canadian Vehicle Owners

A French language manual can be obtained from your dealer, at www.helminc.com, or from:

Propriétaires Canadiens

On peut obtenir un exemplaire de ce guide en français auprès du concessionnaire ou à l'adresse suivante:

Helm, Incorporated
Attention: Customer Service
47911 Halyard Drive
Plymouth, MI 48170
USA

Using this Manual

To quickly locate information about the vehicle, use the Index in the back of the manual. It is an alphabetical list of what is in the manual and the page number where it can be found.

Litho in U.S.A.
Part No. 84181908 A First Printing

©2018 General Motors LLC. All Rights Reserved.

Danger, Warning, and Caution

Warning messages found on vehicle labels and in this manual describe hazards and what to do to avoid or reduce them.

⚠ Danger
Danger indicates a hazard with a high level of risk which will result in serious injury or death.

⚠ Warning
Warning indicates a hazard that could result in injury or death.

Caution
Caution indicates a hazard that could result in property or vehicle damage.

A circle with a slash through it is a safety symbol which means “Do Not,” “Do not do this,” or “Do not let this happen.”

Symbols

The vehicle has components and labels that use symbols instead of text. Symbols are shown along with the text describing the operation or information relating to a specific component, control, message, gauge, or indicator.

: Shown when the owner’s manual has additional instructions or information.

: Shown when the service manual has additional instructions or information.

: Shown when there is more information on another page — “see page.”

Vehicle Symbol Chart

Here are some additional symbols that may be found on the vehicle and what they mean. See the features in this manual for information.

: Air Conditioning System

: Air Conditioning Refrigerant Oil

: Airbag Readiness Light

: Antilock Brake System (ABS)

: Brake System Warning Light

: Dispose of Used Components Properly

: Do Not Apply High Pressure Water

: Engine Coolant Temperature

: Flame/Fire Prohibited

: Flammable

: Forward Collision Alert

: Fuse Block Cover Lock Location

: Fuses

: ISOFIX/LATCH System Child Restraints

: Keep Fuse Block Covers Properly Installed

: Lane Change Alert

: Lane Departure Warning

: Lane Keep Assist

: Malfunction Indicator Lamp

: Oil Pressure

: Park Assist

: Pedestrian Ahead Indicator

: Power

: Rear Cross Traffic Alert

: Registered Technician

: Remote Vehicle Start

: Seat Belt Reminders

: Side Blind Zone Alert

: Stop/Start

: Tire Pressure Monitor

: Traction Control/StabiliTrak/ Electronic Stability Control (ESC)

: Under Pressure

: Vehicle Ahead Indicator

In Brief

Instrument Panel
Instrument Panel 6

Initial Drive Information
Initial Drive Information 8
Remote Keyless Entry (RKE) System 8
Remote Vehicle Start 9
Door Locks 9
Windows 10
Seat Adjustment 10
Heated Seats 12
Head Restraint Adjustment 13
Seat Belts 13
Airbag On-Off Switch 13
Mirror Adjustment 13
Steering Wheel Adjustment 14
Interior Lighting 15
Exterior Lighting 16
Windshield Wiper/Washer 16
Climate Controls 16
Transmission 18
Four-Wheel Drive 19

Vehicle Features
Infotainment System 20
Radio(s) 20
Satellite Radio 21
Portable Audio Devices 21
Bluetooth 21
Steering Wheel Controls 21
Cruise Control 22
Driver Information Center (DIC) 22
Rear Vision Camera (RVC) 23
Power Outlets 23

Performance and Maintenance
Fuel 24
Engine Oil Life System 24
Driving for Better Fuel Economy 24
Diesel Particulate Filter 25
Diesel Exhaust Fluid 28
Roadside Assistance Program 28

Instrument Panel

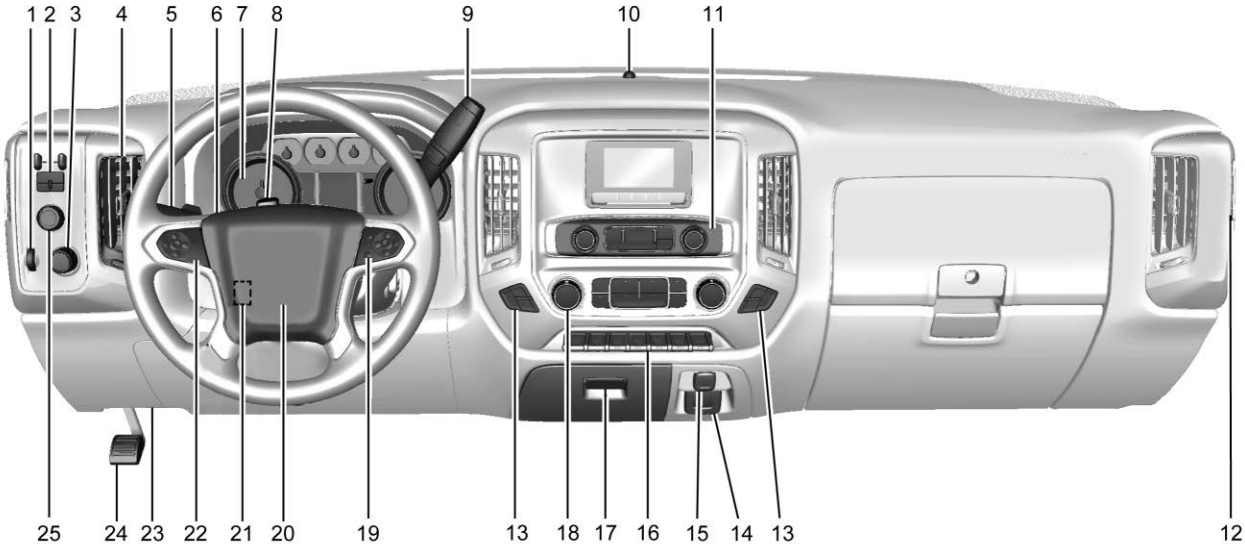

Base Shown, Uplevel Similar

1. *Instrument Panel Illumination Control* ⇨ *135*.
2. Integrated Trailer Brake Control (ITBC) System (If Equipped). See *Towing Equipment* ⇨ *254*.
3. *Exterior Lamp Controls* ⇨ *130*.

   Fog Lamps ⇨ *134* (If Equipped).
4. *Air Vents* ⇨ *187*.
5. Turn Signal Lever. See *Turn and Lane-Change Signals* ⇨ *133*.

   Windshield Wiper/Washer ⇨ *96*.
6. Favorite Switches (Out of View). See *Steering Wheel Controls* ⇨ *95*.

   Volume Switches (Out of View). See *Steering Wheel Controls* ⇨ *95*.
7. *Instrument Cluster* ⇨ *104*.
8. *Hazard Warning Flashers* ⇨ *133*.
9. Shift Lever. See *Automatic Transmission* ⇨ *221*.

   Tow/Haul Selector Button (If Equipped). See *Tow/Haul Mode* ⇨ *225*.

   Range Selection Mode (If Equipped). See *Manual Mode* ⇨ *224*.
10. Light Sensor. See *Automatic Headlamp System* ⇨ *132*.
11. *Infotainment* ⇨ *139*.
12. Passenger Airbag On-Off Switch (If Equipped) (Out of View). See *Airbag On-Off Switch* ⇨ *65*.
13. *Heated Front Seats* ⇨ *50* (If Equipped).
14. Power Outlet 110/120-Volt Alternating Current (If Equipped). See *Power Outlets* ⇨ *99*.
15. *Power Outlets* ⇨ *99* (If Equipped).
16. *Exterior Cargo Lamps* ⇨ *135*.

    Exhaust Brake Switch (If Equipped). See *Exhaust Brake* ⇨ *232*.

    Power Take Off (PTO) Switch (If Equipped). See *Power Take-Off (PTO)* ⇨ *266*.

    Traction Control System (TCS) ⇨ *233*.

    Auxiliary Button (If Equipped). See *Add-On Electrical Equipment* ⇨ *263*.

    Air Suspension Switch (If Equipped). See *Air Suspension* ⇨ *233*.
17. *Instrument Panel Storage* ⇨ *91* (If Equipped).
18. *Climate Control Systems (with Heater Only)* ⇨ *184* or *Climate Control Systems (with Air Conditioning)* ⇨ *186* (If Equipped).
19. *Steering Wheel Controls* ⇨ *95* (If Equipped).

    Driver Information Center (DIC) Controls (If Equipped). See *Driver Information Center (DIC) (Base Level)* ⇨ *117* or *Driver Information Center (DIC) (Uplevel)* ⇨ *119*.

20. *Horn* ⇨ *96*.
21. *Steering Wheel Adjustment* ⇨ *95* (Out of View).
22. *Cruise Control* ⇨ *234*.
23. Data Link Connector (DLC) (Out of View). See *Malfunction Indicator Lamp (Check Engine Light)* ⇨ *112*.
24. *Parking Brake* ⇨ *231*.
25. Electronic Transfer Case Knob (If Equipped). See *Four-Wheel Drive* ⇨ *226*.

Initial Drive Information

This section provides a brief overview about some of the important features that may or may not be on your specific vehicle.

For more detailed information, refer to each of the features which can be found later in this owner's manual.

Remote Keyless Entry (RKE) System

The Remote Keyless Entry (RKE) key functions may work from up to 60 m (197 ft) away from the vehicle.

: Press to unlock the driver door. Press again within three seconds to unlock all remaining doors.

: Press to lock all doors. Lock and unlock feedback can be personalized. See *Vehicle Personalization* ⇨ *123*.

: Press and release one time to initiate vehicle locator. Press and hold for at least three seconds to sound the panic alarm. Press again to cancel the panic alarm.

: If equipped, press and release and then immediately press and hold for at least four seconds to start the engine. See *Remote Vehicle Start* ⇨ *34*.

See *Keys* ⇨ *29* and *Remote Keyless Entry (RKE) System Operation* ⇨ *32*.

Remote Vehicle Start

If equipped, the engine can be started from outside of the vehicle.

Starting the Vehicle

1. Press and release on the RKE transmitter.
2. Immediately press and hold for at least four seconds or until the turn signal lamps flash.

Start the vehicle normally after entering.

When the vehicle starts, the parking lamps will turn on.

Remote start can be extended.

Canceling a Remote Start

To cancel a remote start, do one of the following:

- Press and hold until the parking lamps turn off.
- Turn on the hazard warning flashers.
- Turn the vehicle on and then off.

See *Remote Vehicle Start* ⇨ *34*.

Door Locks

There are several ways to lock and unlock the vehicle.

From outside, use the Remote Keyless Entry (RKE) transmitter or the key in the driver door.

From inside, use the power door locks or push down or pull up on the manual door locks.

From inside, pull the door handle once to unlock the door. Pull again to open the door.

Power Door Locks

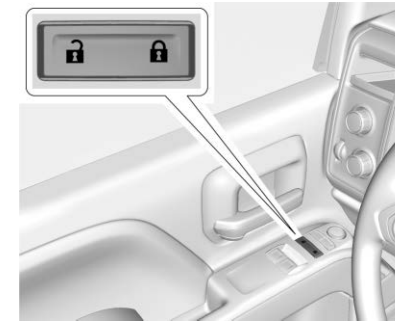

Base

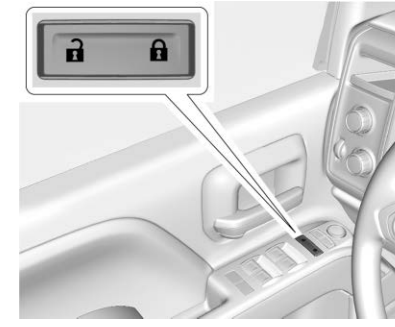

Crew Cab

: Press to lock the doors.

🔓 : Press to unlock the doors.

See *Door Locks* ⇨ *35* and *Power Door Locks* ⇨ *36*.

Windows

Power Windows

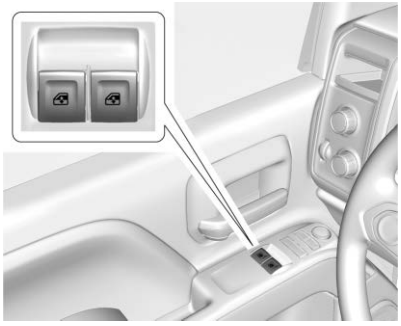

Base

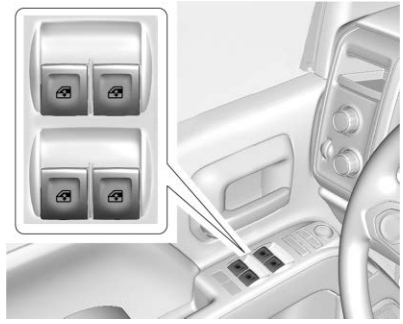

Crew Cab

Power windows work when the ignition is on, in ACC/ACCESSORY, or when Retained Accessory Power (RAP) is active. See *Retained Accessory Power (RAP)* ⇨ *211*.

Using the window switch, press to open or pull to close the window.

The windows may be temporarily disabled if they are used repeatedly within a short time.

See *Power Windows* ⇨ *42*.

Seat Adjustment

Manual Seats

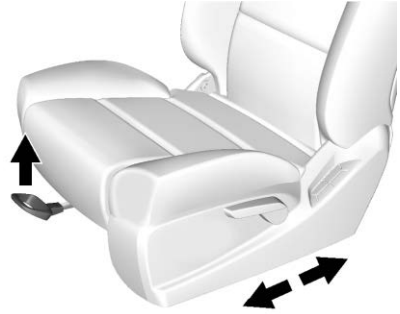

To adjust a manual seat:

1. Pull the handle at the front of the seat.
2. Slide the seat to the desired position and release the handle.
3. Try to move the seat back and forth to be sure it is locked in place.

See *Seat Adjustment* ⇨ *47*.

Power Seats

To adjust a power seat, if equipped:

- Move the seat forward or rearward by sliding the control forward or rearward.
- If equipped, raise or lower the front part of the seat cushion by moving the front of the control up or down.
- If equipped, raise or lower the seat by moving the rear of the control up or down.

See *Power Seat Adjustment* ⇨ *48*.

Lumbar Adjustment

Manual Lumbar

If equipped, move the lever up or down repeatedly to increase or decrease lumbar support.

See *Lumbar Adjustment* ⇨ *48*.

Power Lumbar

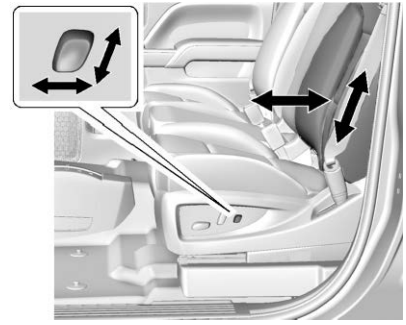

To adjust the power lumbar support, if equipped:

- Press and hold the control forward to increase or rearward to decrease upper and lower lumbar support at the same time.
- If equipped, press and hold the control up to increase upper lumbar support and decrease lower lumbar support.

  Press and hold the control down to increase lower lumbar support and decrease upper lumbar support.

See *Lumbar Adjustment* ⇨ *48*.

Reclining Seatbacks

Manual Reclining Seatbacks

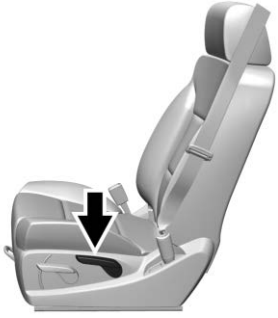

To adjust a manual seatback:

1. Lift the lever.

   The seatback will automatically fold forward.
2. To recline, move the seatback rearward to the desired position, then release the lever to lock the seatback in place.
3. Push and pull on the seatback to make sure it is locked.

To return the seatback to the upright position:

1. Lift the lever fully without applying pressure to the seatback, and the seatback will return to the upright position.
2. Push and pull on the seatback to make sure it is locked.

See *Reclining Seatbacks* ⇨ *49*.

Power Reclining Seatbacks

To recline a power seatback, if equipped:

- Tilt the top of the control rearward to recline.
- Tilt the top of the control forward to raise.

See *Reclining Seatbacks* ⇨ *49*.

Heated Seats

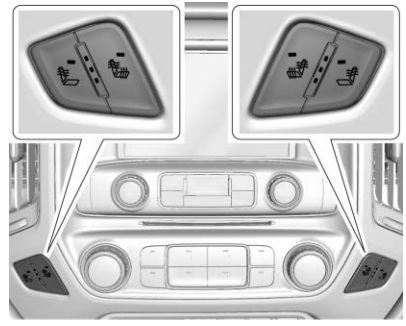

If equipped, the buttons are on the center stack. To operate, the engine must be running.

Press or to heat the driver or passenger seatback only.

Press or to heat the driver or passenger seat cushion and seatback.

See *Heated Front Seats* ⇨ *50*.

Head Restraint Adjustment

Do not drive until the head restraints for all occupants are installed and adjusted properly.

To achieve a comfortable seating position, change the seatback recline angle as little as necessary while keeping the seat and the head restraint height in the proper position.

See *Head Restraints* ⇨ *46* and *Seat Adjustment* ⇨ *47*.

Seat Belts

Refer to the following sections for important information on how to use seat belts properly:

- *Seat Belts* ⇨ *52*
- *How to Wear Seat Belts Properly* ⇨ *53*
- *Lap-Shoulder Belt* ⇨ *55*
- *Lower Anchors and Tethers for Children (LATCH System)* ⇨ *76*

Airbag On-Off Switch

If the instrument panel endcap has the switch pictured in the following illustration, the vehicle has an airbag on-off switch that you can use to manually turn on or off the front outboard passenger airbag.

To operate the airbag on-off switch, use the vehicle key.

See *Airbag On-Off Switch* ⇨ *65* for important information.

Mirror Adjustment

Using hood-mounted air deflectors and add-on convex mirror attachments could decrease mirror performance.

Exterior Mirrors

Manual Mirrors

If equipped, adjust manual mirrors by moving them up and down or left to right to see a little of the side of the vehicle and to have a clear view behind the vehicle.

See *Manual Mirrors* ⇨ *39*.

Power Mirrors

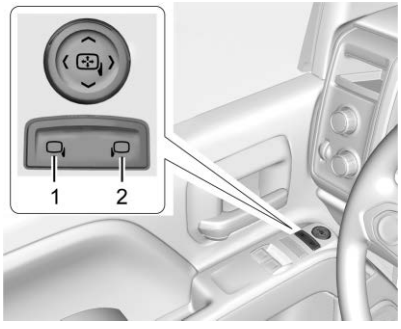

Base

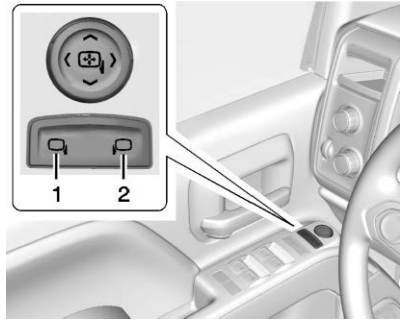

Crew Cab

If equipped with power mirrors:

1. Press (1) or (2) to select the driver or passenger side mirror.
2. Press the arrows on the control pad to move the mirror up, down, right, or left.
3. Adjust each outside mirror so that a little of the vehicle and the area behind it can be seen.
4. Keep the selector switch in the center position when not adjusting either outside mirror.

See *Power Mirrors* ⇨ *40*.

Interior Mirror

Adjustment

Adjust the mirror for a clear view of the area behind the vehicle.

Manual Dimming Rearview Mirror

If equipped, push the tab forward for daytime use and pull it for nighttime use to avoid glare from the headlamps from behind. See *Manual Rearview Mirror* ⇨ *41*.

Steering Wheel Adjustment

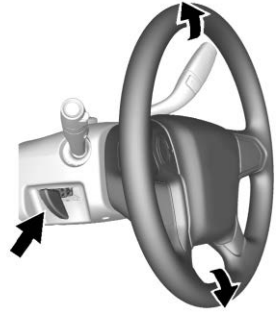

To adjust the steering wheel:

1. Hold the steering wheel and pull the lever.
2. Move the steering wheel up or down.
3. Release the lever to lock the wheel in place.

Do not adjust the steering wheel while driving.

Interior Lighting

Dome Lamps

There are dome lamps in the overhead console and the headliner, if equipped.

To change the dome lamp settings, press the following:

OFF : Turns the lamps off, even when a door is open.

DOOR : The lamps come on automatically when a door is opened.

ON : Turns all dome lamps on.

Reading Lamps

There are reading lamps in the overhead console and the headliner, if equipped. To operate, the ignition must be on or in ACC/ACCESSORY or using Retained Accessory Power (RAP).

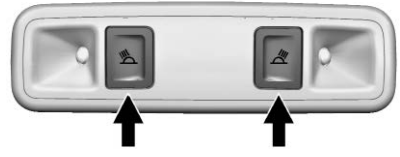

Press or next to each reading lamp to turn it on or off.

For more information about interior lighting, see *Instrument Panel Illumination Control* ⇨ *135*.

Exterior Lighting

The exterior lamp control is on the instrument panel to the left of the steering wheel.

⏻ **:** Turns off the automatic headlamps and Daytime Running Lamps (DRL). Turn the headlamp control to ⏻ again to turn the automatic headlamps or DRL back on.

For vehicles first sold in Canada, off will only work when the vehicle is in P (Park).

AUTO : Automatically turns on the headlamps, parking lamps, taillamps, instrument panel lights, roof marker lamps (if equipped), front/rear sidemarker lamps, and license plate lamps.

: Turns on the parking lamps including all lamps, except the headlamps.

: Turns on the headlamps together with the parking lamps and instrument panel lights.

See:

- *Exterior Lamp Controls* ⇨ *130*.
- *Daytime Running Lamps (DRL)* ⇨ *132*.
- *Fog Lamps* ⇨ *134*.

Windshield Wiper/Washer

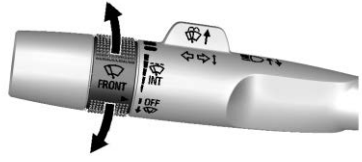

The windshield wiper control is on the turn signal lever.

The windshield wipers are controlled by turning the band with on it.

: Fast wipes.

: Slow wipes.

INT : Turn the band up for more frequent wipes or down for less frequent wipes.

OFF : Turns the windshield wipers off.

: For a single wipe, turn to , then release. For several wipes, hold the band on longer.

: Push the paddle at the top of the lever to spray washer fluid on the windshield.

See *Windshield Wiper/Washer* ⇨ *96*.

Climate Controls

These systems control the heating, cooling, and ventilation.

Climate Control System (with Heater Only)

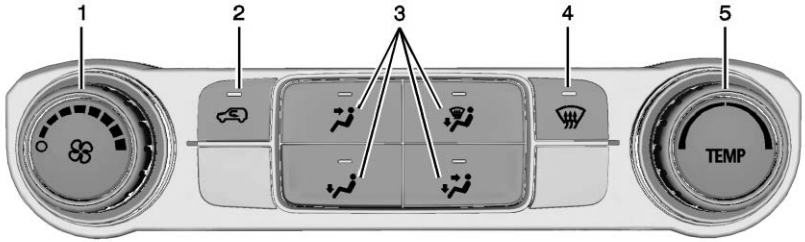

1. Fan Control
2. Air Recirculation
3. Air Delivery Mode Controls
4. Defrost
5. TEMP (Temperature Control)

Climate Control System (with Air Conditioning)

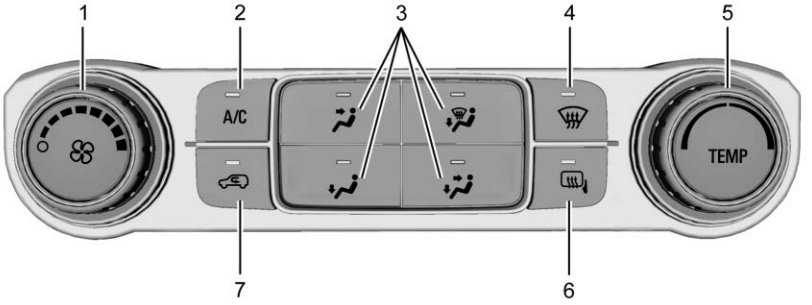

1. Fan Control
2. A/C (Air Conditioning)
3. Air Delivery Mode Controls
4. Defrost
5. TEMP (Temperature Control)
6. REAR (Rear Window Defogger, If Equipped)

   (Heated Outside Mirror, If Equipped)

   (Outside Air, If Equipped)
7. Air Recirculation

Transmission

Range Selection Mode

The Range Selection Mode switch, if equipped, is on the shift lever.

1. To enable the Range Selection feature, move the shift lever to the L (Manual Mode) position. The current range will appear next to the L. This is the highest attainable range with all lower gears accessible. As an example, when 5 (Fifth) gear is selected, 1 (First) through 5 (Fifth) gears are available.
2. Press the plus/minus buttons on the shift lever to select the desired range of gears for current driving conditions. See *Manual Mode* ⇨ *224*.

While using Range Selection Mode, cruise control and the Tow/Haul Mode can be used.

Grade Braking is not available when Range Selection Mode is active. See *Tow/Haul Mode* ⇨ *225*.

Four-Wheel Drive

If equipped with four-wheel drive, the engine's driving power can be sent to all four wheels for extra traction.

Manual Locking Hubs

⚠ Warning

It is dangerous to get out of the vehicle if the shift lever is not fully in P (Park) with the parking brake firmly set. The vehicle can roll.

Do not leave the vehicle when the engine is running. If you have left the engine running, the vehicle can move suddenly. You or others could be injured. To be sure the vehicle will not move, even when you are on fairly level ground, always set the parking brake and move the shift lever to P (Park). See *Shifting Into Park* ⇨ *212*.

The locking hubs are located on each end of the front axle and must be manually turned to LOCK before the four-wheel drive modes can be used.

The hubs may remain in the LOCK position when road surface traction conditions are variable or it is unsafe to unlock them. Turn the locking hubs to FREE when it is safe to do so.

When four-wheel drive is no longer needed turn the locking hubs to FREE.

Transfer Case Controls

Use these controls to shift into and out of the different four-wheel drive modes.

Electronic Transfer Case

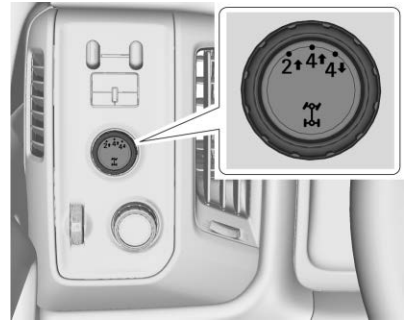

This transfer case knob is to the left of the steering column.

The different drive options that may be available are described following.

2 ↑ (Two-Wheel Drive High) : This setting is used for driving in most street and highway situations.

4 ↑ (Four-Wheel Drive High) : Use this setting when extra traction is needed, such as on snowy or icy roads or in most off-road situations.

4 ↓ (Four-Wheel Drive Low) : This setting sends maximum power to all four wheels. Choose 4↓ when driving in deep sand, mud, or snow, and while climbing or descending steep hills.

See *Four-Wheel Drive* ⇨ *226*.

Vehicle Features

Infotainment System

The base radio and base radio with touchscreen information is included in this manual. See the infotainment manual for information on the uplevel radios, audio players, phone, navigation system, Rear Seat Entertainment (RSE), and voice or speech recognition, if equipped.

Radio(s)

Base Radio

⏻ **:** Press to turn the system on. Press and hold to turn it off. When on, press to mute; press again to unmute. Turn to increase or decrease the volume.

RADIO : Press to choose between FM, AM, and SiriusXM, if equipped.

MEDIA : Press to change the audio source between CD, USB, AUX, and Bluetooth Audio, if equipped.

⌂ **:** Press to go to the Home Page.

MENU : Press to select a menu.

⏮ **:** Press to seek the previous station or track.

⏭ **:** Press to seek the next station or track.

See the base radio information in *Overview (Base Radio with Touchscreen)* ⇨ *144* or *Overview (Base Radio)* ⇨ *140*.

Base Radio with Touchscreen

⏻ **:** Press to turn the system on. Press and hold to turn it off. When on, press to mute; press again to unmute. Turn to increase or decrease the volume.

⌂ **:** Press to go to the Home Page.

⏮ **:** Press to seek the previous station or track.

⏭ **:** Press to seek the next station or track.

See the base radio with touchscreen information in *Overview (Base Radio with Touchscreen)* ⇨ *144* or *Overview (Base Radio)* ⇨ *140*.

Setting the Clock

See *Clock* ⇨ *97*.

Satellite Radio

Vehicles with a SiriusXM satellite radio tuner and a valid SiriusXM satellite radio subscription can receive SiriusXM programming.

SiriusXM Satellite Radio Service

SiriusXM is a satellite radio service based in the 48 contiguous United States and 10 Canadian provinces. SiriusXM satellite radio has a wide variety of programming and commercial-free music, coast to coast, and in digital-quality sound. A fee is required to receive the SiriusXM service.

For more information refer to:

- www.siriusxm.com or call 1-888-601-6296 (U.S.).
- www.siriusxm.ca or call 1-877-438-9677 (Canada).

See *Satellite Radio (Base Radio with Touchscreen)* ⇨ *152* or *Satellite Radio (Base Radio)* ⇨ *152*.

Portable Audio Devices

This vehicle may have a 3.5 mm (1/8 in) auxiliary input jack and USB ports in the center console or armrest. There may be a USB port in the upper glove box. External devices such as iPods®, laptop computers, MP3 players, and USB storage devices may be connected, depending on the audio system.

See *USB Port* ⇨ *158* and *Auxiliary Jack* ⇨ *163*.

Bluetooth

The Bluetooth system allows users with a Bluetooth-enabled cell phone to make and receive hands-free calls using the vehicle audio system and controls.

The Bluetooth-enabled cell phone must be paired with the in-vehicle Bluetooth system before it can be used in the vehicle. Not all phones will support all functions.

See *Bluetooth (Overview)* ⇨ *172* or *Bluetooth (Infotainment Controls)* ⇨ *173*.

Steering Wheel Controls

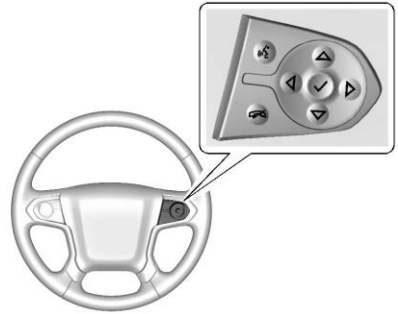

If equipped, some audio controls can be adjusted at the steering wheel.

: If equipped with OnStar or a Bluetooth system, press to interact with those systems. See *OnStar Overview* ⇨ *421*, *Bluetooth (Overview)* ⇨ *172* or *Bluetooth (Infotainment Controls)* ⇨ *173*, or “Bluetooth (Overview)” in the infotainment manual.

: Press to reject an incoming call or end a current call. Press to mute or unmute the infotainment system when not on a call.

◁ **or** ▷ **:** Press to go to the previous or next menu option.

△ **or** ▽ **:** Press to go to the next or previous selection.

✓ **:** Press to select a highlighted menu option.

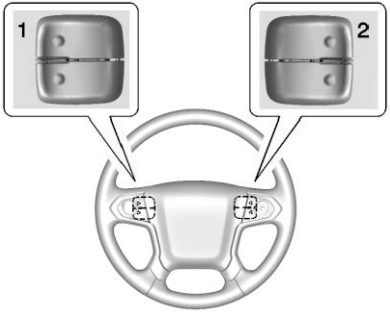

The favorite and volume switches are on the back of the steering wheel.

1. Favorite: When on a radio source, press to select the next or previous favorite. When on a media source, press to select the next or previous track.
2. Volume: Press to increase or decrease the volume.

See *Steering Wheel Controls* ⇨ *95*.

Cruise Control

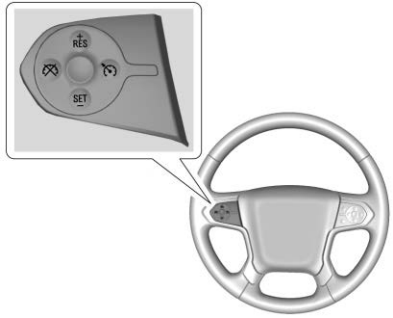

: Press to turn the system on or off. The indicator light is white when cruise control is on and turns off when cruise control is off.

+RES : If there is a set speed in memory, press briefly to resume to that speed or press and hold to accelerate. If cruise control is already active, use to increase vehicle speed.

SET− : Press briefly to set the speed and activate cruise control. If cruise control is already active, use to decrease vehicle speed.

: Press to disengage cruise control without erasing the set speed from memory.

See *Cruise Control* ⇨ *234*.

Driver Information Center (DIC)

The DIC display is in the instrument cluster. It shows the status of many vehicle systems.

If the vehicle has the base level instrument cluster, the trip odometer reset stem is used to operate the DIC.

If the vehicle has the uplevel instrument cluster, the right steering wheel controls are used to operate the DIC.

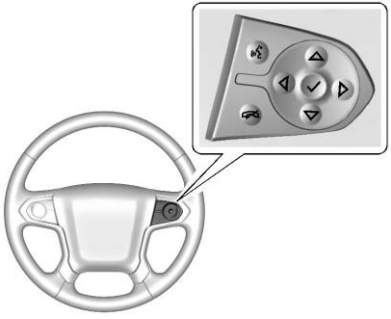

△ **or** ▽ **:** Press to move up or down in a list.

◁ **or** ▷ **:** Press to move between the interactive display zones in the cluster.

✓ **:** Press to open a menu or select a menu item. Press and hold to reset values on certain screens.

See *Driver Information Center (DIC) (Base Level)* ⇨ *117* or *Driver Information Center (DIC) (Uplevel)* ⇨ *119*.

Rear Vision Camera (RVC)

If equipped, RVC shows a view of the area behind the vehicle on the infotainment display when the vehicle is shifted into R (Reverse) to aid with parking and low-speed backing maneuvers.

See *Rear Vision Camera (RVC)* ⇨ *237*.

Power Outlets

Accessory power outlets can be used to plug in electrical equipment, such as a cell phone, MP3 player, etc.

The vehicle may have up to four accessory power outlets.

Vehicles with a Center Console

- One or two in front of the cupholders on the center console
- One inside the center console
- One on the rear of the center console

Vehicles with Bench Seats

- One on the center stack below the climate control system
- One or two in the storage area on the bench seat

Lift the cover to access and replace when not in use.

See *Power Outlets* ⇨ *99*.

Performance and Maintenance

Fuel

Use of diesel fuel with ultra low sulfur content (15 ppm, maximum) is required. See *Fuel for Diesel Engines* ⇨ *238*.

Engine Oil Life System

The engine oil life system calculates engine oil life based on vehicle use and, on most vehicles, displays a DIC message when it is necessary to change the engine oil and filter. The oil life system should be reset to 100% only following an oil change.

Resetting the Oil Life System

To reset the engine oil life system:

1. Display REMAINING OIL LIFE on the DIC.
   See *Driver Information Center (DIC) (Base Level)* ⇨ *117* or *Driver Information Center (DIC) (Uplevel)* ⇨ *119*. If the vehicle does not have DIC buttons, the vehicle must be in P (Park) to access this display.
2. Press and hold ✓ on the DIC, or the trip odometer reset stem if the vehicle does not have DIC buttons, for several seconds. The oil life will change to 100%.

The oil life system can also be reset as follows:

1. Display REMAINING OIL LIFE on the DIC.
   See *Driver Information Center (DIC) (Base Level)* ⇨ *117* or *Driver Information Center (DIC) (Uplevel)* ⇨ *119*.
2. Fully press the accelerator pedal slowly three times within five seconds.
3. If the display changes to 100%, the system is reset.

See *Engine Oil Life System* ⇨ *294*.

Driving for Better Fuel Economy

Driving habits can affect fuel mileage. Here are some driving tips to get the best fuel economy possible:

- Set the climate controls to the desired temperature after the engine is started, or turn them off when not required.
- Avoid fast starts and accelerate smoothly.
- Brake gradually and avoid abrupt stops.
- Avoid idling the engine for long periods of time.
- When road and weather conditions are appropriate, use cruise control.
- Always follow posted speed limits or drive more slowly when conditions require.
- Keep vehicle tires properly inflated.
- Combine several trips into a single trip.

- Replace the vehicle's tires with the same TPC Spec number molded into the tire's sidewall near the size.
- Follow recommended scheduled maintenance.

Diesel Particulate Filter

The Duramax engine is equipped with a Diesel Particulate Filter (DPF) that will filter or trap particulates. The DPF is under the vehicle in the exhaust system.

Depending on a number of factors monitored by the engine computer, the DPF will need to be cleaned of accumulated solids. When a cleaning is needed, the engine computer will initiate a cleaning action by warming the exhaust gas temperature. This feature has been designed to operate automatically, with limited operator involvement or awareness.

Noise may be heard at low speeds when the emission controls are active. This is normal.

Manual Regeneration of Diesel Particulate Filter

This feature is only available on Fleet and Commercial vehicles.

To verify that the vehicle has this feature, refer to the Vehicle Service Parts Identification label (SPID) for RPO code FPF or see www.gmupfitter.com to contact the GM Upfitter Integration Group for assistance.

If equipped, this feature allows for manual cleaning/regeneration of the DPF when it is unable to clean itself. It may be necessary to perform a manual regeneration if driving conditions — such as extended slow speed, stop-and-go traffic, extended idles, short drive cycles, or stationary PTO operation — prevent DPF self-cleaning.

Manual regeneration can only be used when the DPF has become at least 90% full. At 100% full, it will attempt to automatically self-clean if proper driving conditions are met. The DPF will clean itself if the vehicle can be driven above 50 km/h (30 mph) for about 30 minutes.

A Driver Information Center (DIC) message displays when manual regeneration is possible.

Scroll through the DIC pages to find the Exhaust Cleaning menu. Depending on whether the vehicle has a base or uplevel cluster, it may be under the Settings menu.

If the vehicle cannot be stopped when the DIC message first indicates cleaning is available, automatic self-cleaning may have begun. If conditions cannot be met for self-cleaning to complete, and manual regeneration is selected, it may take up to four minutes for the system to switch to manual regeneration. When the switch occurs, a DIC message prompts to start the cleaning process.

⚠ Warning

Do not leave the vehicle during the regeneration.

Make sure that there are no flammables near the muffler, DPF and exhaust pipe which may result in a fire.

Remember that the temperature of exhaust gases is high enough to burn you. You and others could be seriously injured.

Before starting the manual regeneration, make sure all of the following safety conditions are met:

- The vehicle is parked on level ground, away from any flammable materials.
- The vehicle is parked outdoors, away from any walls or buildings.
- The vehicle is at least 3 m (10 ft) from any obstructions or materials that may combust or melt.
- The shift lever is in P (Park).
- The fuel tank is at least one-eighth full.
- All fluids are at the proper level.
- No diagnostic trouble codes have been set, and the malfunction indicator lamp is not on.
- The engine coolant temperature is above 71 °C (160 °F).

After making sure all of the safety conditions have been met, press the trip odometer reset stem or ✓ on the steering wheel control for at least one second to select Start on the infotainment display.

Follow the instructions in the DIC messages. Touch ACCEPT to acknowledge that all of these safety conditions have been met and to activate regeneration.

If the infotainment display returns to the previous screen, then one or more of the necessary operating conditions has not been met. If you cannot determine which condition has not been met, see www.gmupfitter.com to contact the GM Upfitter Integration Group for assistance.

Continue to follow the instructions in the DIC messages. Hold the Exhaust Brake switch on the instrument panel below the climate controls for more than three seconds, and then release it, to begin the regeneration process.

If the EXHAUST BRAKE ON message displays, then the switch was released too soon. Press it again to turn off the exhaust brake, then try again when the DIC message prompts.

When manual regeneration begins, the engine speed increases, the engine cooling fan sound increases, and a DIC message indicates that cleaning is in progress.

A DIC message will display when cleaning has completed. The message will remain as long as cleaning is not necessary. Cleaning could take up to 30 minutes. Upon completion, the engine will return to normal idle, but exhaust

components will remain hot for several minutes. Do not move the vehicle until the exhaust has had time to cool. Manual regeneration can be canceled at any time by pressing the brake pedal or turning the engine off. Unusual noises may be heard if regeneration is interrupted.

Cleaning the DPF (Exhaust Filter)

While the DPF cleaning is automatically controlled by the engine computer, the Driver Information Center (DIC) may display a message. The vehicle will need to operate continuously until the message is no longer displayed. Cleaning occurs most effectively above 50 km/h (30 mph). If the vehicle is returned to idle during the cleaning process, the driver may notice a slightly different sound or a slightly elevated engine idle speed. This is normal. No action is required on the part of the driver during a regular DPF cleaning. See *Diesel Particulate Filter* ⇨ *215*.

Special DPF Driver Messages

If the vehicle is used for numerous short trips or extended slow-speed operation, the engine computer may not be able to adequately heat up the exhaust system to clean the DPF effectively. The engine computer has been designed to continuously monitor the condition of the DPF. When the engine computer detects that the DPF is nearly full of particulates and that the vehicle is not being operated in a manner that would allow effective automatic DPF cleaning, the DIC will display a message.

If the vehicle continues to be driven in a manner that prevents effective DPF cleaning, the DPF will become plugged with particulates. If this occurs, the engine computer will turn on the malfunction indicator lamp (Check Engine Light) in the instrument cluster, and the DIC will display the message ENGINE POWER IS REDUCED. See *Diesel Particulate Filter* ⇨ *215*.

Fuel

Use Ultra Low Sulfur Diesel Fuel (ULSD)

Use ULSD only. The emission control hardware used on the vehicle may be damaged by using fuel with high sulfur levels. Use only fuel that is dispensed from pumps bearing the ULSD label.

Do Not Use Low Sulfur Diesel Fuel (LSD)

Do not use fuel that is dispensed from pumps bearing the LSD label.

Do Not Use Non-Highway Fuel

Fuel labeled as off road or non-highway is typically very high in sulfur content and will damage the emission control system. Non-highway fuel is not intended for use in on-highway vehicles and does not have the fuel properties needed by the DPF-equipped Duramax diesel.

In addition:

- Use the correct engine oil.

- Do not add gasoline to diesel fuel.
- Do not modify the induction or exhaust systems.

See *Fuel for Diesel Engines* ⇨ *238* and *Engine Oil* ⇨ *291*.

Diesel Exhaust Fluid

Diesel Exhaust Fluid (DEF) is used with diesel engines to reduce the amount of regulated emissions produced. The DEF system must be maintained for the vehicle to run properly.

DEF is not a fuel additive. For refilling instructions, see *Diesel Exhaust Fluid* ⇨ *218*. DEF should not be mixed with or added to diesel fuel. DEF freezes when exposed to temperatures below −11 °C (12 ° F).

Locating Diesel Exhaust Fluid

DEF can be purchased at your dealer. It can also be purchased at authorized vehicle and truck dealerships. Additionally, some diesel truck fueling stations or retailers may have DEF for purchase. For vehicles with an active OnStar or connected service plan, OnStar can help to locate a DEF retailer. See *Recommended Fluids and Lubricants* ⇨ *391*.

As the DEF tank becomes low on fluid, the Driver Information Center (DIC) will begin to display warnings to indicate the approximate remaining range. These warnings will increase as the tank becomes empty. Once the tank is empty, vehicle speed will be limited. If there is an issue with the quality of the fluid or the DEF system, the DIC will display warnings. See *Diesel Exhaust Fluid* ⇨ *218*.

Roadside Assistance Program

U.S.: 1-888-899-1327

TTY Users (U.S. Only): 1-888-889-2438

Canada: 1-800-268-6800

New Chevrolet owners are automatically enrolled in the Roadside Assistance Program.

See *Roadside Assistance Program* ⇨ *411*.

Keys, Doors, and Windows

Keys and Locks
Keys 29
Remote Keyless Entry (RKE) System 32
Remote Keyless Entry (RKE) System Operation 32
Remote Vehicle Start 34
Door Locks 35
Power Door Locks 36
Lockout Protection 36
Safety Locks 36

Vehicle Security
Vehicle Security 37
Vehicle Alarm System 37
Immobilizer 38
Immobilizer Operation 38

Exterior Mirrors
Convex Mirrors 39
Manual Mirrors 39
Trailer-Tow Mirrors 39
Power Mirrors 40
Folding Mirrors 40
Heated Mirrors 40

Interior Mirrors
Interior Rearview Mirrors 41
Manual Rearview Mirror 41
Automatic Dimming Rearview Mirror 41

Windows
Windows 41
Manual Windows 42
Power Windows 42
Sun Visors 44

Keys and Locks

Keys

⚠ Warning

Leaving children in a vehicle with an ignition key or Remote Keyless Entry (RKE) transmitter is dangerous and children or others could be seriously injured or killed. They could operate the power window or other controls or make the vehicle move. The windows will function with the key in the ignition or with the RKE transmitter in the vehicle, and children or others could be caught in the path of a closing window. Do not leave children in a vehicle with the ignition key or an RKE transmitter.

⚠ Warning

If the key is unintentionally rotated while the vehicle is running, the ignition could be moved out of the RUN position. This could be caused by heavy items hanging from the key ring, or by large or long items attached to the key ring that could be contacted by the driver or steering wheel. If the ignition moves out of the RUN position, the engine will shut off, braking and steering power assist may be

(Continued)

Warning (Continued)

impacted, and airbags may not deploy. To reduce the risk of unintentional rotation of the ignition key, do not change the way the ignition key and Remote Keyless Entry (RKE) transmitter, if equipped, are connected to the provided key rings.

The ignition key and key rings, and RKE transmitter, if equipped, are designed to work together as a system to reduce the risk of unintentionally moving the key out of the RUN position. The ignition key has a small hole to allow attachment of the provided key ring. It is important that any replacement ignition keys have a small hole. See your dealer if a replacement key is required.

The combination and size of the rings that came with your keys were specifically selected for your vehicle. The rings are connected to the key like two links of a chain to reduce the risk of unintentionally moving the key out of the RUN position. Do not add any additional items to the ring attached to the ignition key. Attach additional items only to the second ring, and limit added items to a few essential keys or small, light items no larger than an RKE transmitter.

Interference from radio-frequency identification (RFID) tags may prevent the key from starting the vehicle. Keep RFID tags away from the key when starting the vehicle.

The key is used for the ignition, all door locks, the glove box, and the floor console storage bin, if equipped. The key has a bar-coded key tag that the dealer or qualified locksmith can use to make new keys. Store this information in a safe place, not in the vehicle.

See your dealer if a replacement key or additional key is needed. If it becomes difficult to turn a key, inspect the key blade for debris. Periodically clean with a brush or pick.

Programming Keys

Follow these procedures to program up to eight keys to the vehicle.

Programming with Two Recognized Keys

To program a new key:

1. Insert the original, already programmed key in the ignition and turn the ignition on.
2. Turn the ignition off, and remove the key.
3. Quickly, within five seconds, insert the second original already programmed key in the ignition and turn the ignition on.
4. Turn the ignition off, and remove the key.
5. Insert the key to be programmed and turn the ignition on within five seconds.
6. The security light will turn off once the key has been programmed.
7. Repeat Steps 1–5 if additional keys are to be programmed.

If a key is lost or damaged, see your dealer to have a new key made.

Programming without Recognized Keys

Program a new key to the vehicle when a recognized key is not available.

If two currently recognized keys are not available, follow this procedure to program the first key.

This procedure will take approximately 30 minutes to complete for the first key. The vehicle must be off and all of the keys you wish to program must be with you.

1. Insert the new vehicle key into the ignition.
2. Turn the ignition on. The security light will come on.

3. Wait 10 minutes until the security light turns off.
4. Turn the ignition off.
5. Repeat Steps 2–4 two more times. After the third time, turn the ignition on; the key is learned and all previously known keys will no longer work with the vehicle.
6. To learn a second key, turn the ignition off, insert the second key to be learned, and turn the ignition on.

After two keys are learned, the remaining keys can be learned by following the procedure in "Programming with Two Recognized Keys."

If locked out of the vehicle, see *Roadside Assistance Program* ⇨ *411*.

With an active OnStar or connected service plan, an OnStar Advisor may remotely unlock the vehicle. See *OnStar Overview* ⇨ *421*.

Remote Keyless Entry (RKE) System

See *Radio Frequency Statement* ⇨ *417*.

If there is a decrease in the Remote Keyless Entry (RKE) operating range:

- Check the distance. The transmitter may be too far from the vehicle.
- Check the location. Other vehicles or objects may be blocking the signal.
- Check the transmitter's battery. See "Battery Replacement" later in this section.
- If the transmitter is still not working correctly, see your dealer or a qualified technician for service.

Remote Keyless Entry (RKE) System Operation

The Remote Keyless Entry (RKE) transmitter functions may work up to 60 m (197 ft) away from the vehicle.

Other conditions can affect the performance of the RKE transmitter. See *Remote Keyless Entry (RKE) System* ⇨ *32*.

With Remote Start Shown, without Remote Start Similar

: If equipped, press and release and then immediately press and hold for at least four seconds to start the engine. See *Remote Vehicle Start* ⇨ *34*.

: Press to lock all doors.

If enabled, the turn signal lamps flash once to indicate locking has occurred. If enabled, the horn chirps

when 🔒 is pressed again within three seconds. See *Vehicle Personalization* ⇨ *123*.

Pressing 🔒 arms the alarm system. See *Vehicle Alarm System* ⇨ *37*.

🔓 **:** Press once to unlock only the driver door. If 🔓 is pressed again within three seconds, all remaining doors unlock. The interior lamps may come on and stay on for 20 seconds or until the ignition is turned on.

If enabled, the turn signal lamps flash twice to indicate unlocking has occurred. See *Vehicle Personalization* ⇨ *123*. If enabled, the exterior lamps may turn on. See *Vehicle Personalization* ⇨ *123*.

Pressing 🔓 on the RKE transmitter disarms the alarm system. See *Vehicle Alarm System* ⇨ *37*.

: Press and release one time to initiate vehicle locator. The turn signal lamps flash and the horn sounds three times.

Press and hold for at least three seconds to sound the panic alarm. The turn signal lamps flash and the horn sounds repeatedly for 30 seconds. The alarm turns off when the ignition is turned on or is pressed again. The ignition must be off for the panic alarm to work.

Battery Replacement

Replace the battery in the RKE transmitter soon if the DIC displays REPLACE BATTERY IN REMOTE KEY.

Caution
When replacing the battery, do not touch any of the circuitry on the transmitter. Static from your body could damage the transmitter.

To replace the battery:

1. Separate and remove the back cover of the RKE transmitter with a flat, thin object, such as a coin.

2. Press and slide the battery down toward the pocket of the RKE transmitter in the direction of the key ring. Do not use a metal object.
3. Remove the battery.
4. Insert the new battery, positive side facing up. Replace with a CR2032 or equivalent battery.
5. Push together the RKE transmitter back cover top side first, and then the bottom toward the key ring.

Remote Vehicle Start

If equipped with remote start, the climate control system will come on when the vehicle is started remotely, depending on the outside temperature.

The rear defog and heated front seats, if equipped, may also come on.
See *Heated Front Seats* ⇨ *50* and *Vehicle Personalization* ⇨ *123*.

Laws in some communities may restrict the use of remote starters. Check local regulations for any requirements on remote starting of vehicles.

Do not use remote start if the vehicle is low on fuel.

The vehicle cannot be remote started if:

- The key is in the ignition.
- A Remote Keyless Entry (RKE) transmitter is in the vehicle.
- The hood is not closed.
- There is an emission control system malfunction and the malfunction indicator lamp is on.

The engine will turn off during a remote vehicle start if:

- The coolant temperature gets too high.
- The oil pressure gets low.

The RKE transmitter range may be reduced while the vehicle is running.

Other conditions can affect the performance of the transmitter.
See *Remote Keyless Entry (RKE) System* ⇨ *32* or *Vehicle Personalization* ⇨ *123*.

Starting the Engine Using Remote Start

1. Press and release 🔒.
2. Immediately press and hold ⟲ until the turn signal lamps flash or for at least four seconds.

   When the vehicle starts, the parking lamps will turn on. The doors will be locked and the climate control system may come on.

   The engine will continue to run for 15 minutes. After 30 seconds, repeat Steps 1 and 2 for a 15-minute time extension.

Turn the ignition on to operate the vehicle.

Extending Engine Run Time

The engine run time can be extended by 15 minutes, for a total of 30 minutes, if during the first 15 minutes Steps 1 and 2 are repeated while the engine is still running. An extension can be requested 30 seconds after starting.

A maximum of two remote starts, or a single start with an extension, is allowed between ignition cycles.

The ignition must be turned on and then back off to use remote start again.

Canceling a Remote Start

To cancel a remote start, do one of the following:

- Press and hold ⟲ until the parking lamps turn off.
- Turn on the hazard warning flashers.
- Turn the ignition on and then off.

Door Locks

⚠ Warning

Unlocked doors can be dangerous.

- Passengers, especially children, can easily open the doors and fall out of a moving vehicle. The doors can be unlocked and opened while the vehicle is moving. The chance of being thrown out of the vehicle in a crash is increased if the doors are not locked. So, all passengers should wear seat belts properly and the doors should be locked whenever the vehicle is driven.
- Young children who get into unlocked vehicles may be unable to get out. A child can be overcome by extreme heat and can suffer

(Continued)

Warning (Continued)

permanent injuries or even death from heat stroke. Always lock the vehicle whenever leaving it.

- Outsiders can easily enter through an unlocked door when you slow down or stop the vehicle. Locking the doors can help prevent this from happening.

There are several ways to lock and unlock the vehicle.

From outside:

- Use the Remote Keyless Entry (RKE) transmitter.
- Use Keyless Access, if equipped.
- Use the key in the driver door or the passenger door, if equipped.

From inside, use the power door locks or the manual door locks. To lock the door with the manual door locks, push down on the manual lock knob.

From inside, pull the door handle once to unlock the door. Pull the handle again to open the door.

See *Vehicle Alarm System* ⇨ *37*.

Free-Turning Locks

The door key lock cylinder turns freely when either the wrong key is used, or the correct key is not fully inserted. The free-turning door lock feature prevents the lock from being forced open. To reset the lock, turn it to the vertical position with the correct key fully inserted. Remove the key and insert it again. If this does not reset the lock, turn the key halfway around in the cylinder and repeat the reset procedure.

Power Door Locks

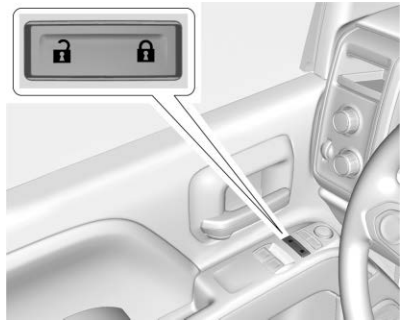

Base

Crew Cab

🔒 **:** Press to lock the doors.

🔓 **:** Press to unlock the doors.

Lockout Protection

If the ignition is on or in ACC/ACCESSORY and the power door lock switch is pressed with the driver door open, all the doors will lock and only the driver door will unlock.

If the vehicle is off and locking is selected while a door is open, when all doors are closed the vehicle will check for RKE transmitters inside. If an RKE transmitter is detected, and the number of RKE transmitters has not reduced, the driver door will unlock and the horn will chirp three times.

This can be manually overridden by pressing and holding 🔒 on the power door lock switch.

Safety Locks

If equipped, the rear door safety locks prevent passengers from opening the rear doors from inside the vehicle.

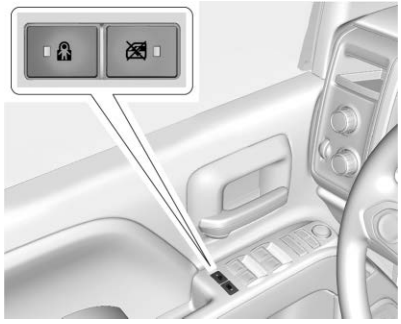

Crew Cab

Press 🔒 to activate the safety locks on the rear doors. The indicator light comes on when activated. Press 🔒 again to deactivate. The vehicle must be on, in ACC/ACCESSORY, or in Retained Accessory Power (RAP). See *Retained Accessory Power (RAP)* ⇨ *211*.

If the indicator light flashes, the feature may not be working properly.

Vehicle Security

This vehicle has theft-deterrent features; however, they do not make the vehicle impossible to steal.

Vehicle Alarm System

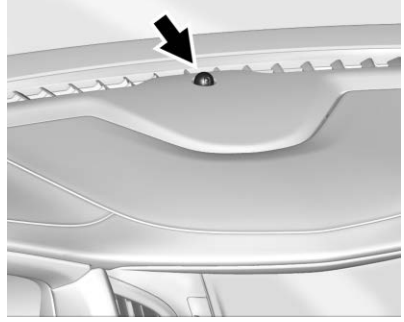

The indicator light, on the instrument panel near the windshield, indicates the status of the system.

Off : Alarm system is disarmed.

On Solid : Vehicle is secured during the delay to arm the system.

Fast Flash : Vehicle is unsecured. A door, the tailgate, or the hood is open.

Slow Flash : Alarm system is armed.

Arming the Alarm System

1. Turn off the vehicle.
2. Lock the vehicle in one of two ways:
   - Use the RKE transmitter.
   - With a door open, press 🔒 on the interior of the door.
3. After 30 seconds, the alarm system will arm and the indicator light will begin to slowly flash. Pressing 🔒 on the RKE transmitter a second time will bypass the 30-second delay and immediately arm the alarm system.

The vehicle alarm system will not arm if the doors are locked with the key.

If the driver door is opened without first unlocking with the RKE transmitter, the horn will chirp and the lights will flash to indicate pre-alarm. If the vehicle is not started, or the door is not unlocked by pressing 🔓 on the RKE transmitter during the 10-second pre-alarm, the alarm will be activated.

The alarm will also be activated if a passenger door, the tailgate, or the hood is opened without first disarming the system. When the alarm is activated, the turn signals flash and the horn sounds for about 30 seconds. The alarm system will then re-arm to monitor for the next unauthorized event.

Disarming the Alarm System

To disarm the alarm system or turn off the alarm if it has been activated:

- Press 🔓 on the RKE transmitter.
- Start the vehicle.

To avoid setting off the alarm by accident:

- Lock the vehicle after all occupants have exited.
- Always unlock a door with the RKE transmitter.

  Unlocking the driver door with the key will not disarm the system or turn off the alarm.

How to Detect a Tamper Condition

If 🔓 is pressed on the RKE transmitter and the horn chirps three times, an alarm occurred previously while the alarm system was armed.

If the alarm has been activated, a message will appear on the DIC.

Immobilizer

See *Radio Frequency Statement* ⇨ *417*.

Immobilizer Operation

This vehicle has a passive theft-deterrent system.

The system does not have to be manually armed or disarmed.

The vehicle is automatically immobilized when the vehicle is turned off.

The system is automatically disarmed when the ignition is turned from off to on.

The security light, in the instrument cluster, comes on if there is a problem with arming or disarming the theft-deterrent system.

When trying to start the vehicle, the security light comes on briefly when the ignition is turned on.

If the engine does not start and the security light stays on, there is a problem with the system. Turn the ignition off and try again.

If the engine still does not start, and the key appears to be undamaged, try another ignition key. It may be necessary to check the fuse. See *Fuses and Circuit Breakers* ⇨ *316*. If the engine still does not start with the other key, the vehicle needs service. If the vehicle does start, the first key may be faulty. See your dealer.

It is possible for the immobilizer system to learn new or replacement keys. Up to eight keys can be programmed for the vehicle. To program additional keys, see *Keys* ⇨ *29*.

Do not leave the transmitter or device that disarms or deactivates the vehicle theft system in the vehicle.

See your dealer to get a new key blank cut exactly as the ignition key that operates the system.

Exterior Mirrors

Convex Mirrors

⚠ Warning

A convex mirror can make things, like other vehicles, look farther away than they really are. If you cut too sharply into the right lane, you could hit a vehicle on the right. Check the inside mirror or glance over your shoulder before changing lanes.

The passenger side mirror is convex shaped. A convex mirror's surface is curved so more can be seen from the driver seat.

Manual Mirrors

If equipped, adjust manual mirrors by moving the mirror up and down or left to right to see a little of the side of the vehicle and to have a clear view behind the vehicle.

Using hood-mounted air deflectors and add-on convex mirror attachments could decrease mirror performance.

Trailer-Tow Mirrors

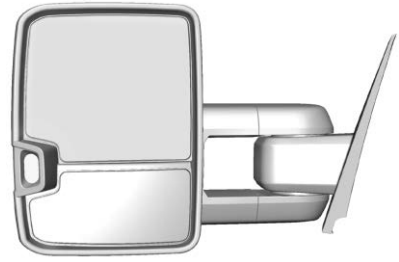

If equipped, adjust trailer-tow mirrors for a clear view of the area behind you. Manually pull out the mirror head to extend it for better visibility when towing a trailer.

The lower portion of the mirror is convex. A convex mirror's surface is curved to see more from the driver

seat. The convex mirror can be adjusted manually to the driver preferred position for better vision.

The mirror may have a turn signal arrow that flashes in the direction of the turn or lane change.

Power Mirrors

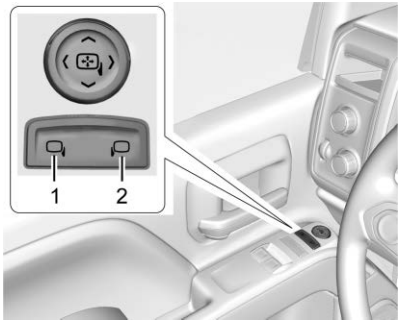

Base

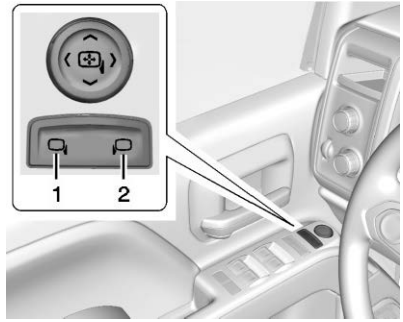

Crew Cab

If equipped with power mirrors:

1. Press (1) or (2) to select the driver or passenger side mirror.
2. Press the arrows on the control pad to move the mirror in the desired direction.
3. Adjust each outside mirror so that a little of the vehicle and the area behind it can be seen.
4. Keep the selector switch in the center position when not adjusting mirrors.

Folding Mirrors

Manual Folding

If equipped, push the mirror toward the vehicle to fold. Push the mirror outward to return to its original position.

Manually fold the mirrors inward to prevent damage when going through an automatic car wash.

Turn Signal Indicator

If equipped, indicator lights on the mirror flash in the direction of the turn or lane change.

Heated Mirrors

REAR **:** If equipped, the rear window defogger also heats the outside mirrors.

: If equipped, press to turn the heated outside mirrors on or off.

If equipped with trailer-tow mirrors, only the upper glass of the mirror is heated. The lower convex part of the towing mirrors is not heated.

See “Rear Window Defogger” under *Climate Control Systems (with Heater Only)* ⇨ *184* or *Climate Control Systems (with Air Conditioning)* ⇨ *186*.

Interior Mirrors

Interior Rearview Mirrors

Adjust the rearview mirror for a clear view of the area behind your vehicle.

Do not spray glass cleaner directly on the mirror. Use a soft towel dampened with water.

Manual Rearview Mirror

If equipped, push the tab forward for daytime use and pull it rearward for nighttime use to avoid glare from the headlamps from behind.

Automatic Dimming Rearview Mirror

If equipped, the mirror will automatically reduce the glare of the headlamps from behind. The dimming feature comes on each time the vehicle is started.

Windows

⚠ Warning

Never leave a child, a helpless adult, or a pet alone in a vehicle, especially with the windows closed in warm or hot weather. They can be overcome by the extreme heat and suffer permanent injuries or even death from heat stroke.

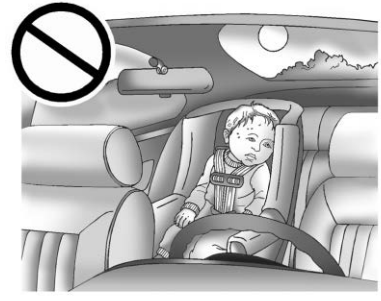

The vehicle aerodynamics are designed to improve fuel economy performance. This may result in a pulsing sound when either rear window is down and the front windows are up. To reduce the sound, open either a front window or the sunroof, if equipped.

Manual Windows

If equipped, turn the hand crank on each door to manually raise or lower the manual windows.

Power Windows

⚠ Warning

Children could be seriously injured or killed if caught in the path of a closing window. Never leave the Remote Keyless Entry (RKE) transmitter or keys in a vehicle with children. When there are children in the rear seat, use the window lockout button to prevent operation of the windows. See *Keys* ⇨ *29*.

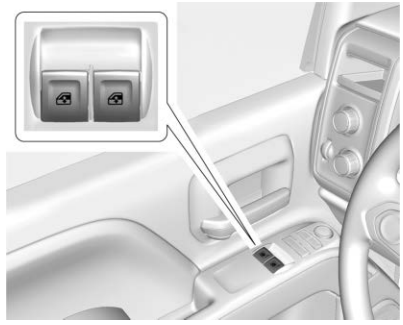

Base

Crew Cab

The power windows work when the ignition is on, in ACC/ACCESSORY, or when Retained Accessory Power (RAP) is active. See *Retained Accessory Power (RAP)* ⇨ *211*.

Using the window switch, press to open or pull to close the window.

The windows may be temporarily disabled if they are used repeatedly within a short time.

Window Lockout

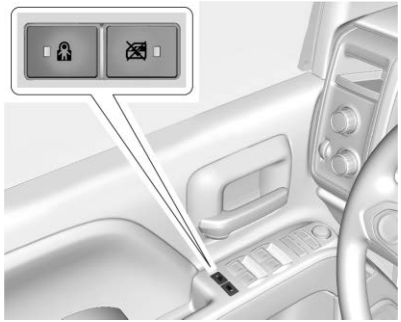

Crew Cab

If equipped, this feature stops the rear door passenger window switches from working except from the driver position.

Press to engage the rear window lockout feature. The indicator light is on when engaged.

Press again to disengage.

Window Express Movement

All windows can be opened without holding the window switch. Press the switch down fully and quickly release to express open the window.

If equipped, pull the window switch up fully and quickly release to express close the window.

Briefly press or pull the window switch in the same direction to stop that window's express movement.

Window Automatic Reversal System

The express-close feature will reverse window movement if it comes in contact with an object. Extreme cold or ice could cause the window to auto-reverse. The window will operate normally after the object or condition is removed.

Automatic Reversal System Override

⚠ Warning

If automatic reversal system override is active, the window will not reverse automatically. You or others could be injured and the window could be damaged. Before using automatic reversal system override, make sure that all people and obstructions are clear of the window path.

When the engine is on, override the automatic reversal system by pulling and holding the window switch if conditions prevent it from closing.

Programming the Power Windows

Programming may be necessary if the vehicle battery has been disconnected or discharged. If the window is unable to express-up, program each express-close window:

1. Close all doors.
2. Turn the ignition on or to ACC/ ACCESSORY.
3. Partially open the window to be programmed. Then close it and continue to pull the switch briefly after the window has fully closed.
4. Open the window and continue to press the switch briefly after the window has fully opened.

Remote Window Operation

If equipped, this feature allows the windows to be opened remotely. If enabled in vehicle personalization, press and hold 🔓 on the RKE transmitter. See *Vehicle Personalization* ⇨ *123*.

Sun Visors

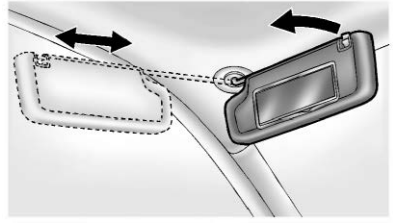

Pull the sun visor down to block glare. Detach the sun visor from the center mount to pivot to the side window and, if equipped, extend along the rod.

Seats and Restraints

Head Restraints
Head Restraints 46

Front Seats
Seat Adjustment 47
Center Seat 47
Power Seat Adjustment 48
Lumbar Adjustment 48
Reclining Seatbacks 49
Heated Front Seats 50

Rear Seats
Rear Seats 51

Seat Belts
Seat Belts 52
How to Wear Seat Belts Properly 53
Lap-Shoulder Belt 55
Seat Belt Use During Pregnancy 58
Lap Belt 58
Seat Belt Extender 59
Safety System Check 59
Seat Belt Care 59
Replacing Seat Belt System Parts after a Crash 60

Airbag System
Airbag System 61
Where Are the Airbags? 62
When Should an Airbag Inflate? 63
What Makes an Airbag Inflate? 63
How Does an Airbag Restrain? 63
What Will You See after an Airbag Inflates? 64
Airbag On-Off Switch 65
Servicing the Airbag-Equipped Vehicle 67
Adding Equipment to the Airbag-Equipped Vehicle 67
Airbag System Check 68
Replacing Airbag System Parts after a Crash 68

Child Restraints
Older Children 69
Infants and Young Children 70
Child Restraint Systems 73
Where to Put the Restraint 74
Lower Anchors and Tethers for Children (LATCH System) 76
Replacing LATCH System Parts After a Crash 85
Securing Child Restraints (With the Seat Belt in the Rear Seat) 85
Securing Child Restraints (With the Seat Belt in the Center Front Seat) 87
Securing Child Restraints (With the Seat Belt in the Front Seat) 87

Head Restraints

Front Seats

The vehicle's front seats have adjustable head restraints in the outboard seating positions.

⚠ Warning

With head restraints that are not installed and adjusted properly, there is a greater chance that occupants will suffer a neck/spinal injury in a crash. Do not drive until the head restraints for all occupants are installed and adjusted properly.

Adjust the head restraint so that the top of the restraint is at the same height as the top of the occupant's head. This position reduces the chance of a neck injury in a crash.

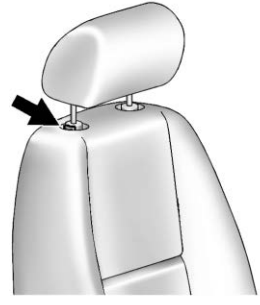

The height of the head restraint can be adjusted. Pull the head restraint up to raise it. Try to move the head restraint to make sure that it is locked in place.

To lower the head restraint, press the button, located on the top of the seatback, and push the restraint down. Try to move the head restraint after the button is released to make sure that it is locked in place.

The front seat outboard head restraints are not removable.

Rear Seats

The rear seat has adjustable headrests in the outboard seating positions.

The height of the headrest can be adjusted. Pull the headrest up to raise it. To lower the headrest, push the headrest down.

If you are installing a child restraint in the rear seat, see “Securing a Child Restraint Designed for the LATCH System” under *Lower Anchors and Tethers for Children (LATCH System)* ⇨ *76*.

Front Seats

Seat Adjustment

⚠ Warning

You can lose control of the vehicle if you try to adjust a driver seat while the vehicle is moving. Adjust the driver seat only when the vehicle is not moving.

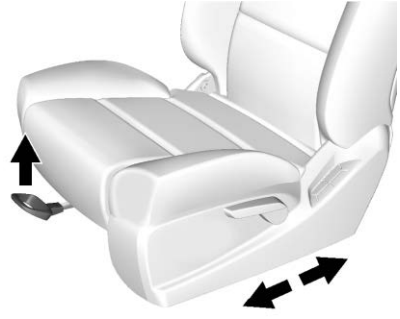

To adjust a manual seat:

1. Pull the handle at the front of the seat.
2. Slide the seat to the desired position and release the handle.
3. Try to move the seat back and forth to be sure it is locked in place.

To adjust the seatback, see *Reclining Seatbacks* ⇨ *49*.

To adjust the lumbar support, if equipped, see *Lumbar Adjustment* ⇨ *48*.

Center Seat

If equipped, the center front seatback doubles as an armrest and cupholder/storage area for the driver and passenger when the center front seat is not used. Do not use it as a seating position when the seatback is folded down.

Power Seat Adjustment

⚠ Warning

The power seats will work with the ignition off. Children could operate the power seats and be injured. Never leave children alone in the vehicle.

To adjust a power seat, if equipped:

- Move the seat forward or rearward by sliding the control forward or rearward.
- If equipped, raise or lower the front part of the seat cushion by moving the front of the control up or down.
- If equipped, raise or lower the seat by moving the rear of the control up or down.

To adjust the seatback, see *Reclining Seatbacks* ⇨ *49*.

To adjust the lumbar support, see *Lumbar Adjustment* ⇨ *48*.

Lumbar Adjustment

Manual Lumbar

If equipped, move the lever up or down repeatedly to increase or decrease lumbar support.

Power Lumbar

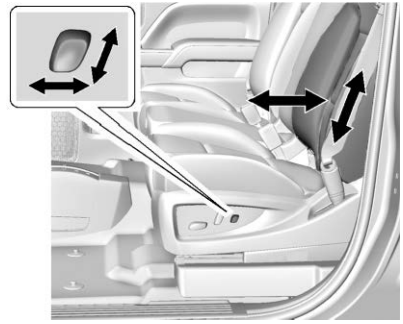

To adjust the power lumbar support, if equipped:

- Press and hold the control forward to increase or rearward to decrease upper and lower lumbar support at the same time.
- If equipped, press and hold the control up to increase upper lumbar support and decrease lower lumbar support.

Press and hold the control down to increase lower lumbar support and decrease upper lumbar support.

Reclining Seatbacks

⚠ Warning

Sitting in a reclined position when the vehicle is in motion can be dangerous. Even when buckled up, the seat belts cannot do their job.

The shoulder belt will not be against your body. Instead, it will be in front of you. In a crash, you could go into it, receiving neck or other injuries.

The lap belt could go up over your abdomen. The belt forces would be there, not at your pelvic bones. This could cause serious internal injuries.

(Continued)

Warning (Continued)

For proper protection when the vehicle is in motion, have the seatback upright. Then sit well back in the seat and wear the seat belt properly.

Do not have a seatback reclined if the vehicle is moving.

Manual Reclining Seatbacks

⚠ Warning

If either seatback is not locked, it could move forward in a sudden stop or crash. That could cause injury to the person sitting there. Always push and pull on the seatbacks to be sure they are locked.

To adjust a manual seatback:

1. Lift the lever.

The seatback will automatically fold forward.

2. To recline, move the seatback rearward to the desired position, then release the lever to lock the seatback in place.
3. Push and pull on the seatback to make sure it is locked.

To return the seatback to the upright position:

1. Lift the lever fully without applying pressure to the seatback, and the seatback will return to the upright position.
2. Push and pull on the seatback to make sure it is locked.

Power Reclining Seatbacks

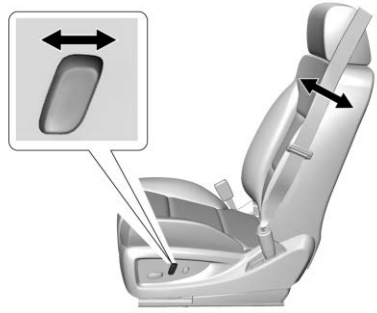

To recline a power seatback, if equipped:

- Tilt the top of the control rearward to recline.
- Tilt the top of the control forward to raise.

Heated Front Seats

⚠ Warning

If temperature change or pain to the skin cannot be felt, the seat heater may cause burns. To reduce the risk of burns, use care when using the seat heater, especially for long periods of time. Do not place anything on the seat that insulates against heat, such as a blanket, cushion, cover, or similar item. This may cause the seat heater to overheat. An overheated seat heater may cause a burn or may damage the seat.

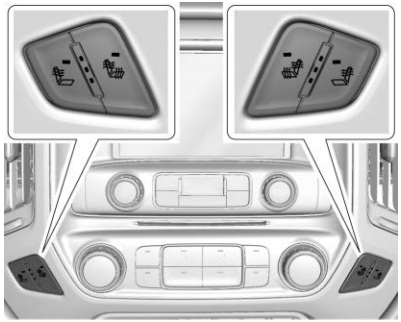

If equipped, the buttons are on the center stack. To operate, the engine must be running.

Press or to heat the driver or passenger seatback only.

Press or to heat the driver or passenger seat cushion and seatback.

The indicator light on the button comes on when this feature is on.

Press the button once for the highest setting. With each press of the button, the seat will change to the next lower setting, and then to the off setting. The indicator lights next to the buttons indicate three for the highest setting and one for the lowest. If the heated seats are on high for an extended time, their level may automatically be lowered.

Remote Start Auto Heated Seats

During a remote start, the heated seats can be turned on automatically. When it is cold outside, the heated seats turn on. The heated seats are canceled when the ignition is turned on. Press the heated seat buttons to use the heated seats after the vehicle is started.

The heated seat indicator lights do not turn on during a remote start.

The temperature performance of an unoccupied seat may be reduced. This is normal.

The heated seats will not turn on during a remote start unless they are enabled in the vehicle personalization menu.
See *Remote Vehicle Start* ⇨ *34* and *Vehicle Personalization* ⇨ *123*.

Rear Seats

Folding the Rear Seat

Either side of the rear seat can be folded for added cargo space.

Caution
Folding a rear seat with the seat belts still fastened may cause damage to the seat or the seat belts. Always unbuckle the seat belts and return them to their normal stowed position before folding a rear seat.

Make sure that nothing is on the seat cushion.

To fold the seat, slowly pull the seat cushion up.

To return the seat to the normal seating position, slowly pull the seat cushion down.

Make sure the seat belts are not twisted or caught in the seat cushion.

⚠ Warning

A seat belt that is improperly routed, not properly attached, or twisted will not provide the protection needed in a crash. The person wearing the belt could be seriously injured. After raising the rear seatback, always check to be sure that the seat belts are properly routed and attached, and are not twisted.

Seat Belts

This section describes how to use seat belts properly, and some things not to do.

⚠ Warning

Do not let anyone ride where a seat belt cannot be worn properly. In a crash, if you or your passenger(s) are not wearing seat belts, injuries can be much worse than if you are wearing seat belts. You can be seriously injured or killed by hitting things inside the vehicle harder or by being ejected from the vehicle. In addition, anyone who is not buckled up can strike other passengers in the vehicle.

It is extremely dangerous to ride in a cargo area, inside or outside of a vehicle. In a collision, passengers riding in these areas are more likely to be seriously injured or killed. Do not allow

(Continued)

Warning (Continued)

passengers to ride in any area of the vehicle that is not equipped with seats and seat belts.

Always wear a seat belt, and check that all passenger(s) are restrained properly too.

This vehicle has indicators as a reminder to buckle the seat belts. See *Seat Belt Reminders* ⇨ *109*.

Why Seat Belts Work

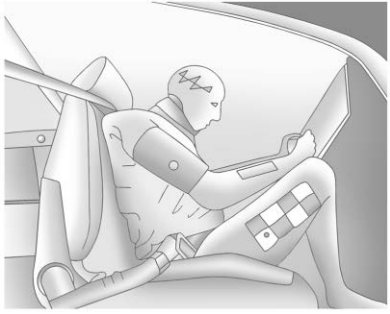

When riding in a vehicle, you travel as fast as the vehicle does. If the vehicle stops suddenly, you keep going until something stops you. It could be the windshield, the instrument panel, or the seat belts!

When you wear a seat belt, you and the vehicle slow down together. There is more time to stop because you stop over a longer distance and, when worn properly, your strongest bones take the forces from the seat belts. That is why wearing seat belts makes such good sense.

Questions and Answers About Seat Belts

Q: Will I be trapped in the vehicle after a crash if I am wearing a seat belt?

A: You *could* be — whether you are wearing a seat belt or not. Your chance of being conscious during and after a crash, so you *can* unbuckle and get out, is *much* greater if you are belted.

Q: If my vehicle has airbags, why should I have to wear seat belts?

A: Airbags are supplemental systems only. They work *with* seat belts — not instead of them. Whether or not an airbag is provided, all occupants still have to buckle up to get the most protection.

Also, in nearly all states and in all Canadian provinces, the law requires wearing seat belts.

How to Wear Seat Belts Properly

Follow these rules for everyone's protection.

There are additional things to know about seat belts and children, including smaller children and infants. If a child will be riding in the vehicle, see *Older Children* ⇨ *69* or *Infants and Young Children* ⇨ *70*. Review and follow the rules for children in addition to the following rules.

It is very important for all occupants to buckle up. Statistics show that unbelted people are hurt more often in crashes than those who are wearing seat belts.

There are important things to know about wearing a seat belt properly.

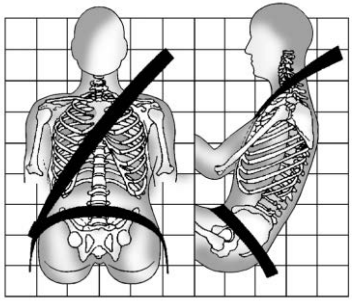

- Sit up straight and always keep your feet on the floor in front of you (if possible).
- Always use the correct buckle for your seating position.
- Wear the lap part of the belt low and snug on the hips, just touching the thighs. In a crash, this applies force to the strong pelvic bones and you would be less likely to slide under the lap belt. If you slid under it, the belt would apply force on your abdomen. This could cause serious or even fatal injuries.
- Wear the shoulder belt over the shoulder and across the chest. These parts of the body are best able to take belt restraining forces. The shoulder belt locks if there is a sudden stop or crash.

⚠ Warning

You can be seriously injured, or even killed, by not wearing your seat belt properly.

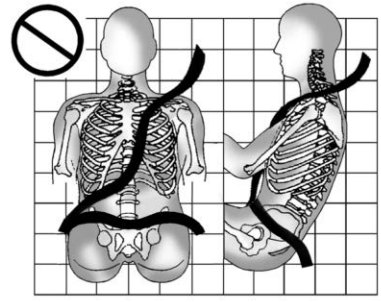

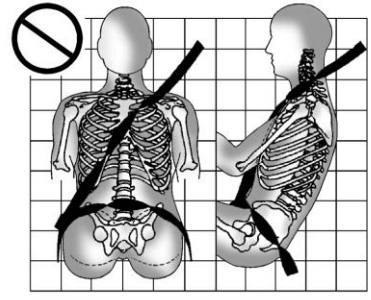

Never allow the lap or shoulder belt to become loose or twisted.

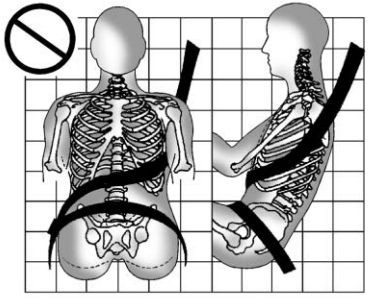

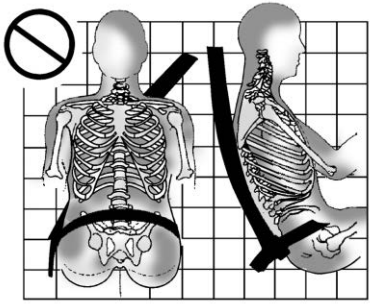

Never wear the shoulder belt under both arms or behind your back.

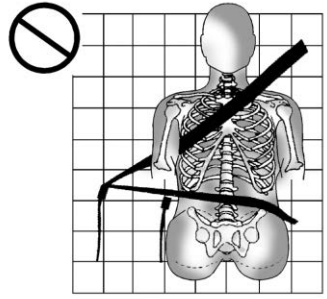

Always use the correct buckle for your seating position.

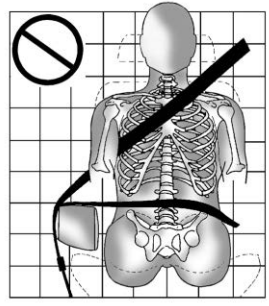

Never route the lap or shoulder belt over an armrest.

Lap-Shoulder Belt

If the vehicle is a regular cab, then all seating positions in the vehicle have a lap-shoulder belt. If the vehicle is a crew cab, then all seating positions in the vehicle have a lap-shoulder belt except for the center front passenger position (if equipped), which has a lap belt. See *Lap Belt* ⇨ *58*.

The following instructions explain how to wear a lap-shoulder belt properly.

1. Adjust the seat, if the seat is adjustable, so you can sit up straight. To see how, see “Seats” in the Index.

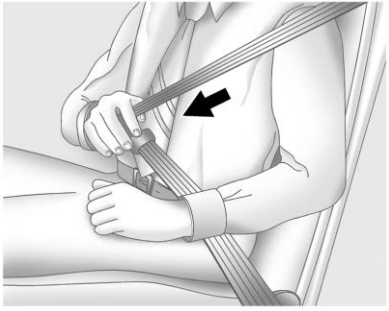

2. Pick up the latch plate and pull the belt across you. Do not let it get twisted.

   The lap-shoulder belt may lock if you pull the belt across you very quickly. If this happens, let the belt go back slightly to unlock it. Then pull the belt across you more slowly.

   If the shoulder portion of a passenger belt is pulled out all the way, the child restraint locking feature may be engaged. If this happens, let the belt go back all the way and start again.

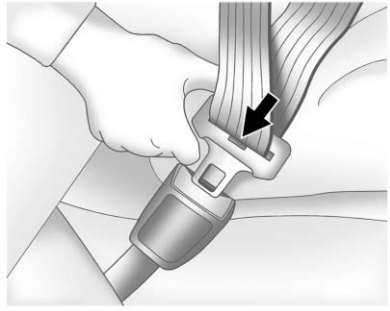

3. Push the latch plate into the buckle until it clicks.

   Pull up on the latch plate to make sure it is secure. If the belt is not long enough, see *Seat Belt Extender* ⇨ *59*.

   Position the release button on the buckle so that the seat belt could be quickly unbuckled if necessary.

4. If equipped with a shoulder belt height adjuster, move it to the height that is right for you. See “Shoulder Belt Height Adjuster” later in this section for instructions on use and important safety information.

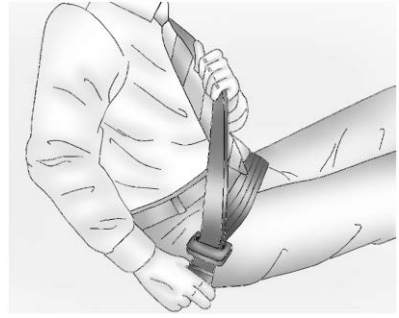

5. To make the lap part tight, pull up on the shoulder belt.

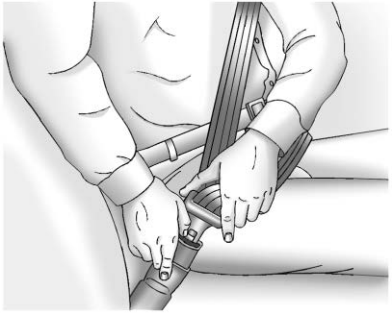

To unlatch the belt, push the button on the buckle. The belt should return to its stowed position.

Always stow the seat belt slowly. If the seat belt webbing returns quickly to the stowed position, the retractor may lock and cannot be pulled out. If this happens, pull the seat belt straight out firmly to unlock the webbing, and then release it. If the webbing is still locked in the retractor, see your dealer.

Before a door is closed, be sure the seat belt is out of the way. If a door is slammed against a seat belt, damage can occur to both the seat belt and the vehicle.

Shoulder Belt Height Adjuster

The vehicle has a shoulder belt height adjuster for the driver and front outboard passenger seating positions.

Adjust the height so the shoulder portion of the belt is on the shoulder and not falling off of it. The belt should be close to, but not contacting, the neck. Improper shoulder belt height adjustment could reduce the effectiveness of the seat belt in a crash. See *How to Wear Seat Belts Properly* ⇨ *53*.

Push down on the release button to move the height adjuster to the desired position.

Move the adjuster up by pushing up on the shoulder belt guide.

After the adjuster is set to the desired position, try to move it down without pushing the release button to make sure it has locked into position.

Seat Belt Pretensioners

This vehicle has seat belt pretensioners for the driver and front outboard passenger, if equipped with a front outboard passenger seat. Although the seat belt pretensioners cannot be seen, they are part of the seat belt assembly. They can help tighten the seat belts during the early stages of a moderate to severe frontal, near frontal, or rear crash if the threshold conditions for pretensioner activation are met.

Pretensioners work only once. If the pretensioners activate in a crash, the pretensioners and probably other parts of the vehicle's seat belt

system will need to be replaced. See *Replacing Seat Belt System Parts after a Crash* ⇨ *60*.

Do not sit on the outboard seat belt while entering or exiting the vehicle or at any time while sitting in the seat. Sitting on the seat belt can damage the webbing and hardware.

Rear Seat Belt Comfort Guides

Rear seat belt comfort guides may provide added seat belt comfort for older children who have outgrown booster seats and for some adults. When installed on a shoulder belt, the comfort guide positions the shoulder belt away from the neck and head.

Comfort guides are available through your dealer for the rear outboard seating positions. Instructions are included with the guide.

Seat Belt Use During Pregnancy

Seat belts work for everyone, including pregnant women. Like all occupants, they are more likely to be seriously injured if they do not wear seat belts.

A pregnant woman should wear a lap-shoulder belt, and the lap portion should be worn as low as possible, below the rounding, throughout the pregnancy.

The best way to protect the fetus is to protect the mother. When a seat belt is worn properly, it is more likely that the fetus will not be hurt in a crash. For pregnant women, as for anyone, the key to making seat belts effective is wearing them properly.

Lap Belt

This section is only for the lap belt. To learn how to wear a lap-shoulder belt, see *Lap-Shoulder Belt* ⇨ *55*.

The vehicle may have a center seating position with a lap seat belt. The lap seat belt does not have a retractor.

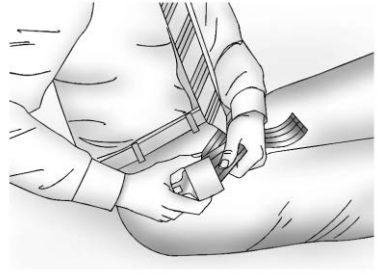

To make the belt longer, tilt the latch plate and pull it along the belt.

Buckle, position, and release it the same way as the lap part of a lap-shoulder belt.

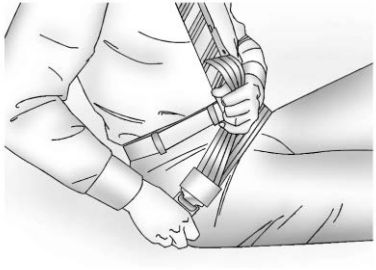

To make the belt shorter, pull its free end as shown until the belt is snug.

If the belt is not long enough, see *Seat Belt Extender* ⇨ *59*.

Make sure the release button on the buckle is positioned so you would be able to unbuckle the seat belt quickly if necessary.

Seat Belt Extender

If the vehicle's seat belt will fasten around you, you should use it.

But if a seat belt is not long enough, your dealer will order you an extender. When you go in to order it, take the heaviest coat you will wear, so the extender will be long enough for you. To help avoid personal injury, do not let someone else use it, and use it only for the seat it is made to fit. The extender has been designed for adults. Never use it for securing child restraints. For more information on the proper use and fit of seat belt extenders see the instruction sheet that comes with the extender.

Safety System Check

Periodically check the seat belt reminder, seat belts, buckles, latch plates, retractors, shoulder belt height adjusters (if equipped), and seat belt anchorages to make sure they are all in working order. Look for any other loose or damaged seat belt system parts that might keep a seat belt system from performing properly. See your dealer to have it repaired. Torn, frayed, or twisted seat belts may not protect you in a crash. Torn or frayed seat belts can rip apart under impact forces. If a belt is torn or frayed, have it replaced immediately. If a belt is twisted, it may be possible to untwist by reversing the latch plate on the webbing. If the twist cannot be corrected, ask your dealer to fix it.

Make sure the seat belt reminder light is working. See *Seat Belt Reminders* ⇨ *109*.

Keep seat belts clean and dry. See *Seat Belt Care* ⇨ *59*.

Seat Belt Care

Keep belts clean and dry.

Seat belts should be properly cared for and maintained.

Seat belt hardware should be kept dry and free of dust or debris. As necessary, exterior hard surfaces and seat belt webbing may be lightly cleaned with mild soap and water.

Ensure there is not excessive dust or debris in the mechanism. If dust or debris exists in the system please see the dealer. Parts may need to be replaced to ensure proper functionality of the system.

⚠ Warning

Do not bleach or dye seat belt webbing. It may severely weaken the webbing. In a crash, they might not be able to provide adequate protection. Clean and rinse seat belt webbing only with mild soap and lukewarm water. Allow the webbing to dry.

Replacing Seat Belt System Parts after a Crash

⚠ Warning

A crash can damage the seat belt system in the vehicle. A damaged seat belt system may not properly protect the person using it, resulting in serious injury or even death in a crash. To help make sure the seat belt systems are working properly after a crash, have them inspected and any necessary replacements made as soon as possible.

After a minor crash, replacement of seat belts may not be necessary. But the seat belt assemblies that were used during any crash may have been stressed or damaged. See your dealer to have the seat belt assemblies inspected or replaced.

New parts and repairs may be necessary even if the seat belt system was not being used at the time of the crash.

Have the seat belt pretensioners checked if the vehicle has been in a crash, or if the airbag readiness light stays on after you start the vehicle or while you are driving. See *Airbag Readiness Light* ⇨ *110*.

Airbag System

The vehicle has the following airbag:

- A frontal airbag for the driver.

The vehicle may have the following airbag:

- A frontal airbag for the front outboard passenger.

For frontal airbags, the word AIRBAG is on the center of the steering wheel for the driver and on the instrument panel for the front outboard passenger.

Airbags are designed to supplement the protection provided by seat belts. Even though today's airbags are also designed to help reduce the risk of injury from the force of an inflating airbag, all airbags must inflate very quickly to do their job.

Here are the most important things to know about the airbag system:

⚠ Warning

You can be severely injured or killed in a crash if you are not wearing your seat belt, even with airbags. Airbags are designed to work with seat belts, not replace them. Also, airbags are not designed to inflate in every crash. In some crashes seat belts are the only restraint. See *When Should an Airbag Inflate?* ⇨ *63*.

Wearing your seat belt during a crash helps reduce your chance of hitting things inside the vehicle or being ejected from it. Airbags are "supplemental restraints" to the seat belts. Everyone in the vehicle should wear a seat belt properly, whether or not there is an airbag for that person.

⚠ Warning

Because airbags inflate with great force and faster than the blink of an eye, anyone who is up against, or very close to any airbag when it inflates can be seriously injured or killed. Do not sit unnecessarily close to any airbag, as you would be if sitting on the edge of the seat or leaning forward. Seat belts help keep you in position before and during a crash. Always wear a seat belt, even with airbags. The driver should sit as far back as possible while still maintaining control of the vehicle. The seat belts and the front outboard passenger airbag(s) are most effective when you are sitting well back and upright in the seat with both feet on the floor.

⚠ Warning

Children who are up against, or very close to, any airbag when it inflates can be seriously injured or killed. Always secure children properly in the vehicle. To read how, see *Older Children* ⇨ *69* or *Infants and Young Children* ⇨ *70*.

There is an airbag readiness light on the instrument panel, which shows the airbag symbol.

The system checks the airbag electrical system for malfunctions. The light tells you if there is an electrical problem. See *Airbag Readiness Light* ⇨ *110*.

Where Are the Airbags?

The driver frontal airbag is in the center of the steering wheel.

If the vehicle has a front outboard passenger frontal airbag, it is in the passenger side instrument panel.

⚠ Warning

If something is between an occupant and an airbag, the airbag might not inflate properly or it might force the object into that person causing severe injury or even death. The path of an inflating airbag must be kept clear. Do not put anything between an occupant and an

(Continued)

Warning (Continued)

airbag, and do not attach or put anything on the steering wheel hub or on or near any other airbag covering.

When Should an Airbag Inflate?

This vehicle is equipped with one or more airbags. See *Airbag System* ⇨ *61*. Airbags are designed to inflate if the impact exceeds the specific airbag system's deployment threshold. Deployment thresholds are used to predict how severe a crash is likely to be in time for the airbags to inflate and help restrain the occupants. The vehicle has electronic sensors which help the airbag system determine the severity of the impact. Deployment thresholds can vary with specific vehicle design.

Frontal airbags are designed to inflate in moderate to severe frontal or near-frontal crashes to help reduce the potential for severe injuries mainly to the driver's or front outboard passenger's head and chest.

Whether the frontal airbags will or should inflate is not based primarily on how fast the vehicle is traveling. It depends on what is hit, the direction of the impact, and how quickly the vehicle slows down.

Frontal airbags may inflate at different crash speeds depending on whether the vehicle hits an object straight on or at an angle, and whether the object is fixed or moving, rigid or deformable, narrow or wide.

Frontal airbags are not intended to inflate during vehicle rollovers, rear impacts, or in many side impacts.

In any particular crash, no one can say whether an airbag should have inflated simply because of the vehicle damage or repair costs.

What Makes an Airbag Inflate?

In a deployment event, the sensing system sends an electrical signal triggering a release of gas from the inflator. Gas from the inflator fills the airbag causing the bag to break out of the cover. The inflator, the airbag, and related hardware are all part of the airbag module.

For airbag locations, see *Where Are the Airbags?* ⇨ *62*.

How Does an Airbag Restrain?

In moderate to severe frontal or near frontal collisions, even belted occupants can contact the steering wheel or the instrument panel. In moderate to severe side collisions, even belted occupants can contact the inside of the vehicle.

Airbags supplement the protection provided by seat belts by distributing the force of the impact more evenly over the occupant's body.

But airbags would not help in many types of collisions, primarily because the occupant's motion is not toward those airbags. See *When Should an Airbag Inflate?* ⇨ *63*.

Airbags should never be regarded as anything more than a supplement to seat belts.

What Will You See after an Airbag Inflates?

After a frontal airbag inflates, it quickly deflates, so quickly that some people may not even realize the airbag inflated. Some components of the airbag module may be hot for several minutes. For location of the airbags, see *Where Are the Airbags?* ⇨ *62*.

The parts of the airbag that come into contact with you may be warm, but not too hot to touch. There may be some smoke and dust coming from the vents in the deflated airbags. Airbag inflation does not prevent the driver from seeing out of the windshield or being able to steer the vehicle, nor does it prevent people from leaving the vehicle.

⚠ Warning

When an airbag inflates, there may be dust in the air. This dust could cause breathing problems for people with a history of asthma or other breathing trouble. To avoid this, everyone in the vehicle should get out as soon as it is safe to do so. If you have breathing problems but cannot get out of the vehicle after an airbag inflates, then get fresh air by opening a window or a door. If you experience breathing problems following an airbag deployment, you should seek medical attention.

The vehicle has a feature that may automatically unlock the doors (if equipped with power door locks), turn on the interior lamps and hazard warning flashers, and shut off the fuel system after the airbags inflate. The feature may also activate, without airbag inflation, after an event that exceeds a predetermined threshold. After turning the ignition off and then on again, the fuel system will return to normal operation; the doors can be locked, the interior lamps can be turned off, and the hazard warning flashers can be turned off using the controls for those features. If any of these systems are damaged in the crash they may not operate as normal.

⚠ Warning

A crash severe enough to inflate the airbags may have also damaged important functions in the vehicle, such as the fuel system, brake and steering systems, etc. Even if the vehicle appears to be drivable after a moderate crash, there may be concealed damage that could make it difficult to safely operate the vehicle.

(Continued)

Warning (Continued)

Use caution if you should attempt to restart the engine after a crash has occurred.

In many crashes severe enough to inflate the airbag, windshields are broken by vehicle deformation. Additional windshield breakage may also occur from the front outboard passenger airbag.

- Airbags are designed to inflate only once. After an airbag inflates, you will need some new parts for the airbag system. If you do not get them, the airbag system will not be there to help protect you in another crash. A new system will include airbag modules and possibly other parts. The service manual for the vehicle covers the need to replace other parts.
- The vehicle has a crash sensing and diagnostic module which records information after a crash. See *Vehicle Data Recording and Privacy* ⇨ *419* and *Event Data Recorders* ⇨ *419*.
- Let only qualified technicians work on the airbag systems. Improper service can mean that an airbag system will not work properly. See your dealer for service.

Airbag On-Off Switch

If the passenger side instrument panel endcap has the switch pictured in the following illustration, the vehicle has an airbag on-off switch that you can use to manually turn on or off the front outboard passenger airbag.

This switch should only be turned to the OFF position if the person in the front outboard passenger position is a member of a passenger risk group identified by the national government as follows:

Infant. An infant (less than 1 year old) must ride in the front seat because:

- *My vehicle has no rear seat;*
- *My vehicle has a rear seat too small to accommodate a rear-facing infant seat; or*
- *The infant has a medical condition which, according to the infant's physician, makes it necessary for the infant to ride in the front seat so that the driver can constantly monitor the child's condition.*

Child age 1 to 12. A child age 1 to 12 must ride in the front seat because:

- *My vehicle has no rear seat;*
- *Although children ages 1 to 12 ride in the rear seat(s) whenever possible, children ages 1 to 12*

sometimes must ride in the front because no space is available in the rear seat(s) of my vehicle; or

- *The child has a medical condition which, according to the child's physician, makes it necessary for the child to ride in the front seat so that the driver can constantly monitor the child's condition.*

Medical Condition. A passenger has a medical condition which, according to his or her physician:

- *Causes the passenger airbag to pose a special risk for the passenger; and*
- *Makes the potential harm from the passenger airbag in a crash greater than the potential harm from turning off the airbag and allowing the passenger, even if belted, to hit the instrument panel or windshield in a crash.*

⚠ Warning

If the front outboard passenger frontal airbag is turned off for a person who is not in a risk group identified by the national government, that person will not have the extra protection of an airbag. In a crash, the airbag will not be able to inflate and help protect the person sitting there. Do not turn off the front outboard passenger frontal airbag unless the person sitting there is in a risk group.

To turn off the front outboard passenger frontal airbag, insert the ignition key into the airbag on-off switch, push in, and move the switch to the OFF position.

The airbag OFF light will come on and stay on to let you know that the front outboard passenger airbag is off. See *Airbag On-Off Light* ⇨ *110*. The airbag OFF light will stay on to remind you that the airbag is off. The front outboard passenger airbag will remain off until you turn it back on again.

⚠ Warning

If the airbag readiness light ever comes on and stays on, it means that something may be wrong with the airbag system. For example, the front outboard passenger frontal airbag could inflate even though the airbag on-off switch is turned off.

(Continued)

Warning (Continued)

To help avoid injury to yourself or others, have the vehicle serviced right away. See *Airbag Readiness Light* ⇨ *110* for more information, including important safety information.

To turn the front outboard passenger airbag on again, insert the ignition key into the airbag on-off switch, push in, and move the switch to the ON position.

The front outboard passenger frontal airbag is now enabled (may inflate). See *Airbag On-Off Light* ⇨ *110*.

Servicing the Airbag-Equipped Vehicle

Airbags affect how the vehicle should be serviced. There are parts of the airbag system in several places around the vehicle. Your dealer and the service manual have information about servicing the vehicle and the airbag system. To purchase a service manual, see *Publication Ordering Information* ⇨ *416*.

⚠ Warning

For up to 10 seconds after the vehicle is turned off and the battery is disconnected, an airbag can still inflate during improper service. You can be injured if you are close to an airbag when it inflates. Avoid yellow connectors. They are probably part of the airbag system. Be sure to follow proper service procedures, and make sure the person performing work for you is qualified to do so.

Adding Equipment to the Airbag-Equipped Vehicle

Adding accessories that change the vehicle's frame, bumper system, height, front end, or side sheet metal, may keep the airbag system from working properly.

The operation of the airbag system can also be affected by changing, including improperly repairing or replacing, any parts of the following:

- Airbag system, including airbag modules, front sensors, sensing and diagnostic module, or airbag wiring
- Front seats, including stitching, seams, or zippers
- Seat belts
- Steering wheel, instrument panel, overhead console, ceiling trim, or pillar garnish trim
- Inner door seals, including speakers

Your dealer and the service manual have information about the location of the airbag modules and sensors,

sensing and diagnostic module, and airbag wiring along with the proper replacement procedures.

If a snow plow is added to the vehicle, the airbags should still work properly. The airbag systems were designed to work properly under a wide range of conditions, including snow plowing with vehicles that have the optional snow plow prep package, RPO VYU. Do not change or defeat the snow plow's "tripping mechanism." If you do, it can damage the snow plow and the vehicle, and may cause an airbag deployment.

If the vehicle must be modified because you have a disability and have questions about whether the modifications will affect the vehicle's airbag system, or if you have questions about whether the airbag system will be affected if the vehicle is modified for any other reason, call Customer Assistance. See *Customer Assistance Offices* ⇨ *409*.

Airbag System Check

The airbag system does not need regularly scheduled maintenance or replacement. Make sure the airbag readiness light is working. See *Airbag Readiness Light* ⇨ *110*.

Caution

If an airbag covering is damaged, opened, or broken, the airbag may not work properly. Do not open or break the airbag coverings. If there are any opened or broken airbag coverings, have the airbag covering and/or airbag module replaced. For the location of the airbags, see *Where Are the Airbags?* ⇨ *62*. See your dealer for service.

Replacing Airbag System Parts after a Crash

⚠ Warning

A crash can damage the airbag systems in the vehicle.
A damaged airbag system may not properly protect you and your passenger(s) in a crash, resulting in serious injury or even death. To help make sure the airbag systems are working properly after a crash, have them inspected and any necessary replacements made as soon as possible.

If an airbag inflates, you will need to replace airbag system parts. See your dealer for service.

If the airbag readiness light stays on after the vehicle is started or comes on when you are driving, the airbag system may not work properly. Have the vehicle serviced right away. See *Airbag Readiness Light* ⇨ *110*.

Child Restraints

Older Children

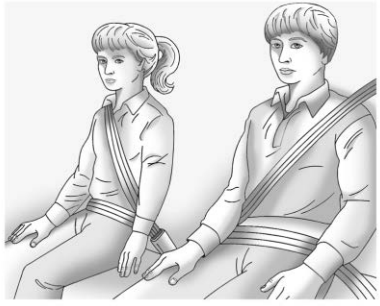

Older children who have outgrown booster seats should wear the vehicle's seat belts.

The manufacturer instructions that come with the booster seat state the weight and height limitations for that booster. Use a booster seat with a lap-shoulder belt until the child passes the fit test below:

- Sit all the way back on the seat. Do the knees bend at the seat edge? If yes, continue. If no, return to the booster seat.
- Buckle the lap-shoulder belt. Does the shoulder belt rest on the shoulder? If yes, continue. If no, try using the rear seat belt comfort guide, if available. See "Rear Seat Belt Comfort Guides" under *Lap-Shoulder Belt* ⇨ *55*. If a comfort guide is not available, or if the shoulder belt still does not rest on the shoulder, then return to the booster seat.
- Does the lap belt fit low and snug on the hips, touching the thighs? If yes, continue. If no, return to the booster seat.
- Can proper seat belt fit be maintained for the length of the trip? If yes, continue. If no, return to the booster seat.

If you have the choice, a child should sit in a position with a lap-shoulder belt and get the additional restraint a shoulder belt can provide.

Q: What is the proper way to wear seat belts?

A: An older child should wear a lap-shoulder belt and get the additional restraint a shoulder belt can provide. The shoulder belt should not cross the face or neck. The lap belt should fit snugly below the hips, just touching the top of the thighs. This applies belt force to the child's pelvic bones in a crash. It should never be worn over the abdomen, which could cause severe or even fatal internal injuries in a crash.

Also see "Rear Seat Belt Comfort Guides" under *Lap-Shoulder Belt* ⇨ *55*.

According to accident statistics, children are safer when properly restrained in a rear seating position.

In a crash, children who are not buckled up can strike other people who are buckled up, or can be thrown out of the vehicle. Older children need to use seat belts properly.

⚠ Warning

Never allow more than one child to wear the same seat belt. The seat belt cannot properly spread the impact forces. In a crash, they can be crushed together and seriously injured. A seat belt must be used by only one person at a time.

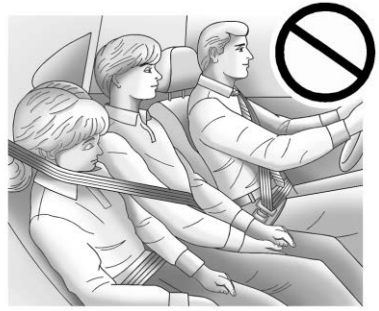

⚠ Warning

Never allow a child to wear the seat belt with the shoulder belt behind their back. A child can be seriously injured by not wearing the lap-shoulder belt properly. In a crash, the child would not be restrained by the shoulder belt. The child could move too far forward increasing the chance of head and neck injury. The child might also slide under the lap belt. The belt force would then be applied right on the abdomen.

(Continued)

Warning (Continued)

That could cause serious or fatal injuries. The shoulder belt should go over the shoulder and across the chest.

Infants and Young Children

Everyone in a vehicle needs protection! This includes infants and all other children. Neither the distance traveled nor the age and size of the traveler changes the

need, for everyone, to use safety restraints. In fact, the law in every state in the United States and in every Canadian province says children up to some age must be restrained while in a vehicle.

⚠ Warning

Children can be seriously injured or strangled if a shoulder belt is wrapped around their neck. The shoulder belt can tighten but cannot be loosened if it is locked. The shoulder belt locks when it is pulled all the way out of the retractor. It unlocks when the shoulder belt is allowed to go all the way back into the retractor, but it cannot do this if it is wrapped around a child's neck. If the shoulder belt is locked and tightened around a child's neck, the only way to loosen the belt is to cut it.

(Continued)

Warning (Continued)

Never leave children unattended in a vehicle and never allow children to play with the seat belts.

Every time infants and young children ride in vehicles, they should have the protection provided by appropriate child restraints. Neither the vehicle's seat belt system nor its airbag system is designed for them.

Children who are not restrained properly can strike other people, or can be thrown out of the vehicle.

⚠ Warning

Never hold an infant or a child while riding in a vehicle. Due to crash forces, an infant or a child will become so heavy it is not possible to hold it during a crash. For example, in a crash at only 40 km/h (25 mph), a 5.5 kg (12 lb)

(Continued)

Warning (Continued)

infant will suddenly become a 110 kg (240 lb) force on a person's arms. An infant or child should be secured in an appropriate restraint.

⚠ Warning

Children who are up against, or very close to, any airbag when it inflates can be seriously injured

(Continued)

Warning (Continued)

or killed. Never put a rear-facing child restraint in the front outboard seat. Secure a rear-facing child restraint in a rear seat. It is also better to secure a forward-facing child restraint in a rear seat. If you must secure a forward-facing child restraint in the front outboard seat, always move the front passenger seat as far back as it will go.

Child restraints are devices used to restrain, seat, or position children in the vehicle and are sometimes called child seats or car seats.

There are three basic types of child restraints:

- Forward-facing child restraints
- Rear-facing child restraints
- Belt-positioning booster seats

The proper child restraint for your child depends on their size, weight, and age, and also on whether the child restraint is compatible with the vehicle in which it will be used.

For each type of child restraint, there are many different models available. When purchasing a child restraint, be sure it is designed to be used in a motor vehicle. If it is, the restraint will have a label saying that it meets federal motor vehicle safety standards. The restraint manufacturer's instructions that come with the restraint state the weight and height limitations for a particular child restraint. In addition, there are many kinds of restraints available for children with special needs.

⚠ Warning

To reduce the risk of neck and head injury in a crash, infants and toddlers should be secured in a rear-facing child restraint until age two, or until they reach the maximum height and weight limits of their child restraint.

⚠ Warning

A young child's hip bones are still so small that the vehicle's regular seat belt may not remain low on the hip bones, as it should. Instead, it may settle up around the child's abdomen. In a crash, the belt would apply force on a body area that is unprotected by any bony structure. This alone could cause serious or fatal

(Continued)

Warning (Continued)

injuries. To reduce the risk of serious or fatal injuries during a crash, young children should always be secured in appropriate child restraints.

Child Restraint Systems

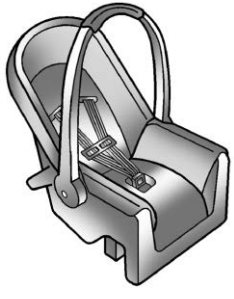

Rear-Facing Infant Restraint

A rear-facing child restraint provides restraint with the seating surface against the back of the infant.

The harness system holds the infant in place and, in a crash, acts to keep the infant positioned in the restraint.

Forward-Facing Child Restraint

A forward-facing child restraint provides restraint for the child's body with the harness.

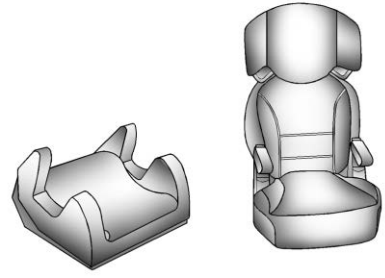

Booster Seats

A belt-positioning booster seat is used for children who have outgrown their forward-facing child restraint. Boosters are designed to improve the fit of the vehicle's seat belt system until the child is large enough for the vehicle seat belts to fit properly without a booster seat. See the seat belt fit test in *Older Children* ⇨ *69*.

Securing an Add-On Child Restraint in the Vehicle

⚠ Warning

A child can be seriously injured or killed in a crash if the child restraint is not properly secured in the vehicle. Secure the child restraint properly in the vehicle using the vehicle's seat belt or LATCH system, following the instructions that came with that child restraint and the instructions in this manual.

To help reduce the chance of injury, the child restraint must be secured in the vehicle. Child restraints must be secured in vehicle seats by lap belts or the lap belt portion of a lap-shoulder belt, or by the LATCH system. See *Lower Anchors and Tethers for Children (LATCH System)* ⇨ *76* for more information. Children can be endangered in a crash if the child restraint is not properly secured in the vehicle.

When securing an add-on child restraint, refer to the instructions that come with the restraint which may be on the restraint itself or in a booklet, or both, and to this manual. The child restraint instructions are important, so if they are not available, obtain a replacement copy from the manufacturer.

Keep in mind that an unsecured child restraint can move around in a collision or sudden stop and injure people in the vehicle. Be sure to properly secure any child restraint in the vehicle — even when no child is in it.

In some areas of the United States and Canada, Certified Child Passenger Safety Technicians (CPSTs) are available to inspect and demonstrate how to correctly use and install child restraints. In the U.S., refer to the National Highway Traffic Safety Administration (NHTSA) website to locate the nearest child safety seat inspection station. For CPST availability in Canada, check with Transport Canada or the Provincial Ministry of Transportation office.

Securing the Child Within the Child Restraint

⚠ Warning

A child can be seriously injured or killed in a crash if the child is not properly secured in the child restraint. Secure the child properly following the instructions that came with that child restraint.

Where to Put the Restraint

According to accident statistics, children and infants are safer when properly restrained in an appropriate child restraint secured in a rear seating position.

Whenever possible, children aged 12 and under should be secured in a rear seating position.

Never put a rear-facing child restraint in the front. This is because the risk to the rear-facing child is so great if the airbag deploys.

If a child restraint is secured in the front outboard passenger seat and the vehicle has a switch on the instrument panel endcap to manually turn off the front outboard passenger airbag, see *Airbag On-Off Switch* ⇨ *65* and *Securing Child Restraints (With the Seat Belt in the Center Front Seat)* ⇨ *87* or *Securing Child Restraints (With the Seat Belt in the Rear Seat)* ⇨ *85* or *Securing Child Restraints (With the Seat Belt in the Front Seat)* ⇨ *87* for more information, including important safety information.

⚠ Warning

A child in a rear-facing child restraint can be seriously injured or killed if the front outboard passenger airbag inflates. This is because the back of the rear-facing child restraint would

(Continued)

Warning (Continued)

be very close to the inflating airbag. A child in a forward-facing child restraint can be seriously injured or killed if the front outboard passenger airbag inflates and the passenger seat is in a forward position.

Even if the airbag switch has turned off the front outboard passenger frontal airbag, no system is fail-safe. No one can guarantee that an airbag will not deploy under some unusual circumstance, even though it is turned off.

Secure rear-facing child restraints in a rear seat, even if the airbag is off. If you secure a forward-facing child restraint in the front outboard passenger seat, always move the seat as far back as it will go. It is better to secure the child restraint in a rear seat.

⚠ Warning

A child in a child restraint in the center front seat can be badly injured or killed by the frontal airbags if they inflate. Never secure a child restraint in the center front seat. It is always better to secure a child restraint in a rear seat.

Do not use child restraints in the center front seat position.

If the vehicle does not have a rear seat that will accommodate a rear-facing child restraint, a rear-facing child restraint should not be installed in the vehicle, even if the airbag is off.

When securing a child restraint with the seat belts in a rear seat position, study the instructions that came with the child restraint to make sure it is compatible with this vehicle.

Child restraints and booster seats vary considerably in size, and some may fit in certain seating positions better than others.

Depending on where you place the child restraint and the size of the child restraint, you may not be able to access adjacent seat belts or LATCH anchors for additional passengers or child restraints. Adjacent seating positions should not be used if the child restraint prevents access to or interferes with the routing of the seat belt.

Wherever a child restraint is installed, be sure to follow the instructions that came with the child restraint and secure the child restraint properly.

Keep in mind that an unsecured child restraint can move around in a collision or sudden stop and injure people in the vehicle. Be sure to properly secure any child restraint in the vehicle — even when no child is in it.

Lower Anchors and Tethers for Children (LATCH System)

The LATCH system secures a child restraint during driving or in a crash. LATCH attachments on the child restraint are used to attach the child restraint to the anchors in the vehicle. This system is designed to make installation of a child restraint easier.

In order to use the LATCH system in your vehicle, you need a child restraint that has LATCH attachments. LATCH-compatible rear-facing and forward-facing child seats can be properly installed using either the LATCH anchors or the vehicle's seat belts. Do not use both the seat belts and the LATCH anchorage system to secure a rear-facing or forward-facing child seat.

Booster seats use the vehicle's seat belts to secure the child in the booster seat. If the manufacturer recommends that the booster seat be secured with the LATCH system, this can be done as long as the booster seat can be positioned properly and there is no interference with the proper positioning of the lap-shoulder belt on the child.

Make sure to follow the instructions that came with the child restraint, and also the instructions in this manual.

When installing a child restraint with a top tether, you must also use either the lower anchors or the seat belts to properly secure the child restraint. A child restraint must never be attached using only the top tether.

The LATCH anchorage system can be used until the combined weight of the child plus the child restraint is 29.5 kg (65 lbs). Use the seat belt alone instead of the LATCH anchorage system once the combined weight is more than 29.5 kg (65 lbs).

See *Securing Child Restraints (With the Seat Belt in the Center Front Seat)* ⇨ *87* or *Securing Child Restraints (With the Seat Belt in the Rear Seat)* ⇨ *85* or *Securing Child Restraints (With the Seat Belt in the Front Seat)* ⇨ *87*.

Child restraints built after March 2014 will be labeled with the specific child weight up to which the LATCH system can be used to install the restraint.

The following explains how to attach a child restraint with these attachments in the vehicle.

Not all vehicle seating positions or child restraints have lower anchors and attachments or top tether anchors and attachments. In this case, the seat belt must be used (with top tether where available) to secure the child restraint.
See *Securing Child Restraints (With the Seat Belt in the Center Front Seat)* ⇨ *87* or *Securing Child Restraints (With the Seat Belt in the Rear Seat)* ⇨ *85* or *Securing Child Restraints (With the Seat Belt in the Front Seat)* ⇨ *87*.

Lower Anchors

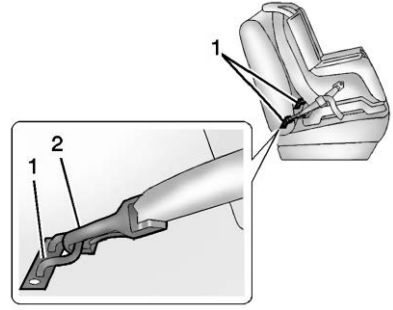

Lower anchors (1) are metal bars built into the vehicle. There are two lower anchors for each LATCH seating position that will accommodate a child restraint with lower attachments (2).

Top Tether Anchor

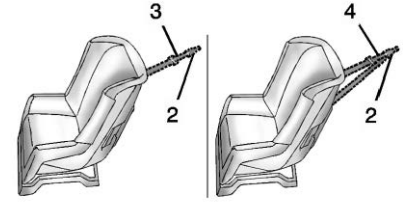

A top tether (3, 4) is used to secure the top of the child restraint to the vehicle. A top tether anchor is built into the vehicle. The top tether attachment hook (2) on the child restraint connects to the top tether anchor in the vehicle in order to reduce the forward movement and rotation of the child restraint during driving or in a crash.

The child restraint may have a single tether (3) or a dual tether (4). Either will have a single attachment hook (2) to secure the top tether to the anchor.

Some child restraints that have a top tether are designed for use with or without the top tether being attached. Others require the top tether always to be attached. In Canada, the law requires that forward-facing child restraints have a top tether, and that the tether be attached. Be sure to read and follow the instructions for your child restraint.

Lower Anchor and Top Tether Anchor Locations

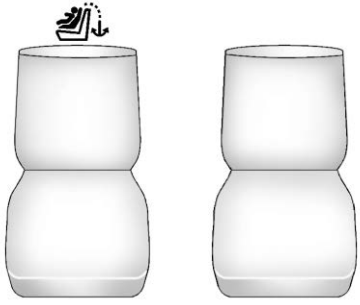

Regular Cab — Two-Passenger Front Seat

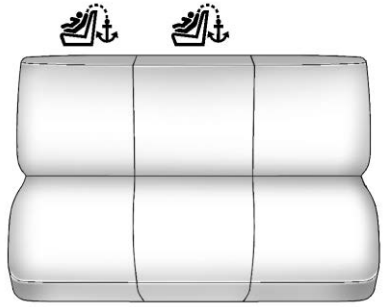

Regular Cab — Three-Passenger Front Seat

: Seating positions with top tether anchors.

Do not install a child restraint in the center front seating position. See *Securing Child Restraints (With the Seat Belt in the Center Front Seat)* ⇨ *87* or *Securing Child Restraints (With the Seat Belt in the Rear Seat)* ⇨ *85* or *Securing Child Restraints (With the Seat Belt in the Front Seat)* ⇨ *87* for more information.

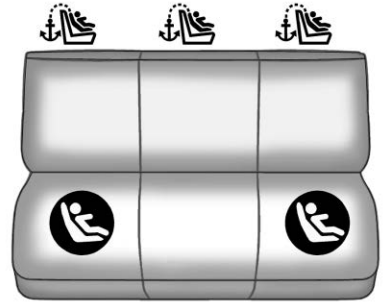

Crew Cab Rear Seat

: Seating positions with top tether anchors.

: Seating positions with two lower anchors.

To assist in locating the lower anchors on crew cab models, each seating position with lower anchors

has two labels near the crease between the seatback and the seat cushion.

For regular cab models, there is an anchor symbol on the cover to assist you in locating the top tether anchors.

Do not install a child restraint in the center seating position.
See *Securing Child Restraints (With the Seat Belt in the Center Front Seat)* ⇨ *87* or *Securing Child Restraints (With the Seat Belt in the Rear Seat)* ⇨ *85* or *Securing Child Restraints (With the Seat Belt in the Front Seat)* ⇨ *87* for more information.

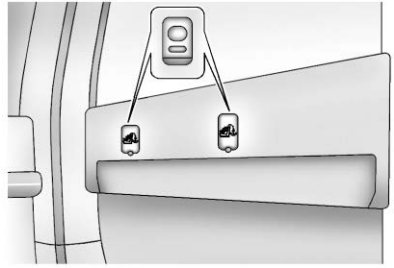

Regular Cab

For regular cab models, the top tether anchors are under covers on the back panel behind the passenger seat. Remove the trim plug to access the anchor. Be sure to use an anchor on the same side of the vehicle as the seating position where the child restraint will be placed.

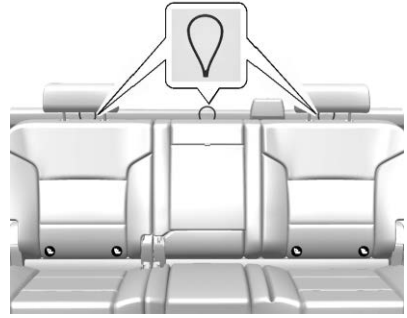

Crew Cab

For crew cab models, the top tether anchors are the loops near the top of the seatback for each rear seating position. These loops will be used to route the top tether through, as well as to secure the top tether to the vehicle. Be sure to use the anchor (loop) on the same side of the vehicle as the seating position where the child restraint will be placed.

Be sure to read the following instructions to properly install a child restraint using these loops.

Do not secure a child restraint in a position without a top tether anchor if a national or local law requires that the top tether be attached, or if the instructions that come with the child restraint say that the top tether must be attached.

According to accident statistics, children and infants are safer when properly restrained in a child restraint system or infant restraint system secured in a rear seating position. See *Where to Put the Restraint* ⇨ *74* for additional information.

Securing a Child Restraint Designed for the LATCH System

⚠ Warning

A child could be seriously injured or killed in a crash if the child restraint is not properly attached to the vehicle using either the LATCH anchors or the vehicle seat belt. Follow the instructions

(Continued)

Warning (Continued)

that came with the child restraint and the instructions in this manual.

⚠ Warning

Do not attach more than one child restraint to a single anchor, except for the center top tether anchor in the crew cab. Attaching more than one child restraint to a single anchor could cause the anchor or attachment to come loose or even break during a crash. A child or others could be injured. To reduce the risk of serious or fatal injuries during a crash, attach only one child restraint per anchor.

⚠ Warning

Children can be seriously injured or strangled if a shoulder belt is wrapped around their neck. The shoulder belt can tighten but cannot be loosened if it is locked. The shoulder belt locks when it is pulled all the way out of the retractor. It unlocks when the shoulder belt is allowed to go all the way back into the retractor, but it cannot do this if it is wrapped around a child's neck. If the shoulder belt is locked and tightened around a child's neck, the only way to loosen the belt is to cut it.

Buckle any unused seat belts behind the child restraint so children cannot reach them. Pull the shoulder belt all the way out of the retractor to set the lock, and tighten the belt behind the child restraint after the child restraint has been installed.

Caution

Do not let the LATCH attachments rub against the vehicle's seat belts. This may damage these parts. If necessary, move buckled seat belts to avoid rubbing the LATCH attachments.

Do not fold the rear seatback when the seat is occupied. Do not fold the empty rear seat with a seat belt buckled. This could damage the seat belt or the seat. Unbuckle and return the seat belt to its stowed position, before folding the seat.

If you need to secure more than one child restraint in the rear seat, see *Where to Put the Restraint* ⇨ *74*.

Regular Cab Models

1. For models without a rear seat, forward-facing child restraints should only be installed in the right front seating position with belts and a top tether. See *Securing Child Restraints (With the Seat Belt in the Center Front Seat)* ⇨ *87* or *Securing Child Restraints (With the Seat Belt in the Rear Seat)* ⇨ *85* or *Securing Child Restraints (With the Seat Belt in the Front Seat)* ⇨ *87*.

   If the child restraint manufacturer recommends that the top tether be attached, attach and tighten the top tether to the top tether anchor, if your vehicle has one. Refer to the child restraint instructions and the following steps:

   1.1. Fold the passenger seatback forward to access the top tether anchor. See *Reclining Seatbacks* ⇨ *49*.

   1.2. Find the top tether anchor.

   1.3. Remove the cover to expose the anchor.

   1.4. Route, attach, and tighten the top tether according to your child restraint instructions and the following instructions:

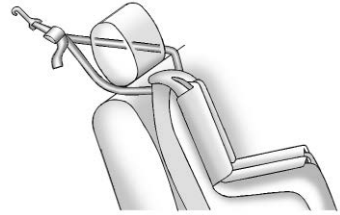

If the position you are using has an adjustable head restraint and you are using a dual tether, route the tether around the head restraint.

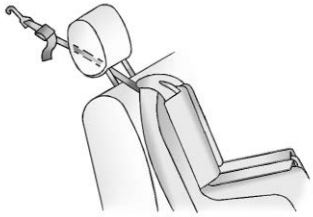

If the position you are using has an adjustable head restraint and you are using a single tether, raise the head restraint and route the tether under the head restraint and in between the head restraint posts.

2. Secure the child restraint in the right front seating position with the vehicle belts.
See *Securing Child Restraints (With the Seat Belt in the Center Front Seat)* ⇨ *87* or *Securing Child Restraints (With the Seat Belt in the Rear Seat)* ⇨ *85* or *Securing Child Restraints (With the Seat Belt in the Front Seat)* ⇨ *87*.

3. Before placing a child in the child restraint, make sure it is securely held in place. To check, grasp the child restraint at the belt path and attempt to move it side to side and back and forth. There should be no more than 2.5 cm (1 in) of movement for proper installation.

Crew Cab Models

1. Attach and tighten the lower attachments to the lower anchors. If the child restraint does not have lower attachments or the desired seating position does not have lower anchors, secure the child restraint with the top tether and the belts. Refer to your child restraint manufacturer's instructions and the instructions in this manual.

   1.1. Find the lower anchors for the desired seating position.

   1.2. Put the child restraint on the seat.

   1.3. Attach and tighten the lower attachments on the child restraint to the lower anchors.

2. For forward-facing child restraints, attach and tighten the top tether to the top tether anchor (loop), if your vehicle has one. Follow the child restraint instructions, the vehicle LATCH anchor weight limits described at the beginning of this section, and the following steps:

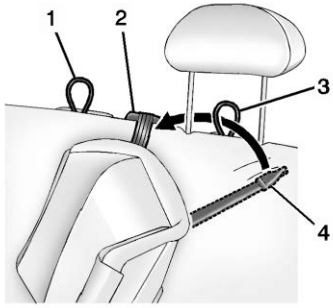

Example — Rear Driver Side Position

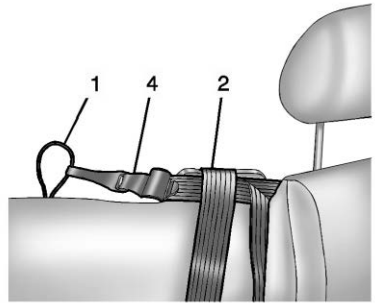

Example — Rear Driver Side Position

2.1. For a top tether in the rear driver side position:

2.1.1. Raise the headrest.

2.1.2. Route the top tether (4) between the headrest posts, through the loop (3), behind the inboard headrest post, and under the center shoulder belt (2).

2.1.3. Then attach the top tether (4) to the top tether anchor (loop) (1) at the center rear seating position.

2.2. For a top tether in the rear center position:

2.2.1. Route the top tether (4) through the center loop (1), and behind the passenger side headrest post.

2.2.2. Then attach the top tether (4) to the top tether anchor (loop) at the rear passenger side seating position.

2.3. For a top tether in the rear passenger side position:

2.3.1. Raise the headrest.

2.3.2. Route the top tether (4) between the headrest posts, through the loop on the passenger side, and behind the inboard headrest post.

2.3.3. Then attach the top tether (4) to the top tether anchor (loop) (1) at the center rear seating position.

3. Tighten the top tether per the child restraint manufacturer's instructions.

   When the top tether is properly tightened, the anchor (loop) may bend. This is normal and will not damage the vehicle.

   If child restraints are installed in both outboard positions, both top tethers can be attached to the center loop. Top tethers can be attached for child restraints in all three rear seating positions at the same time, following the routing instructions above.

4. Before placing a child in the child restraint, make sure it is securely held in place. To check, grasp the child restraint at the LATCH path and attempt to move it side to side and back and forth. There should be no more than 2.5 cm (1 in) of movement for proper installation.

Headrest Removal and Reinstallation

Crew Cab Models

For outboard rear seating positions, if the child restraint cannot be installed properly with the headrest in place, the headrest may be removed. See your dealer for assistance with removal.

Store the removed headrests in a secure place. Reinstall the headrest before the seating position is used.

To reinstall the headrest:

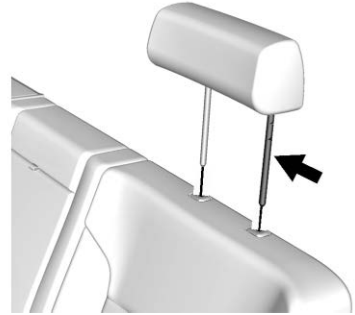

1. Insert the headrest posts into the holes in the top of the seatback with the longer chrome plated post toward the driver side of the vehicle.
2. Push the headrest all the way down until it contacts the top of the seatback.

Replacing LATCH System Parts After a Crash

⚠ Warning

A crash can damage the LATCH system in the vehicle. A damaged LATCH system may not properly secure the child restraint, resulting in serious injury or even death in a crash. To help make sure the LATCH system is working properly after a crash, see your dealer to have the system inspected and any necessary replacements made as soon as possible.

If the vehicle has the LATCH system and it was being used during a crash, new LATCH system parts may be needed.

New parts and repairs may be necessary even if the LATCH system was not being used at the time of the crash.

Securing Child Restraints (With the Seat Belt in the Rear Seat)

When securing a child restraint with the seat belts in a rear seat position, study the instructions that came with the child restraint to make sure it is compatible with this vehicle.

If the child restraint has the LATCH system, see *Lower Anchors and Tethers for Children (LATCH System)* ⇨ *76* for how and where to install the child restraint using LATCH. If a child restraint is secured in the vehicle using a seat belt and it uses a top tether, see *Lower Anchors and Tethers for Children (LATCH System)* ⇨ *76* for top tether anchor locations.

Do not secure a child seat in a position without a top tether anchor if a national or local law requires that the top tether be anchored, or if the instructions that come with the child restraint say that the top tether must be anchored.

In Canada, the law requires that forward-facing child restraints have a top tether, and that the tether be attached.

If the child restraint or vehicle seat position does not have the LATCH system, you will be using the seat belt to secure the child restraint. Be sure to follow the instructions that came with the child restraint.

If more than one child restraint needs to be installed in the rear seat, be sure to read *Where to Put the Restraint* ⇨ *74*.

1. Put the child restraint on the seat.
2. Pick up the latch plate, and run the lap and shoulder portions of the vehicle's seat belt through or around the restraint. The child restraint instructions will show you how.

3. Push the latch plate into the buckle until it clicks.

   Position the release button on the buckle, away from the child restraint, so that the seat belt could be quickly unbuckled if necessary.

4. Pull the shoulder belt all the way out of the retractor to set the lock. When the retractor lock is set, the belt can be tightened but not pulled out of the retractor.

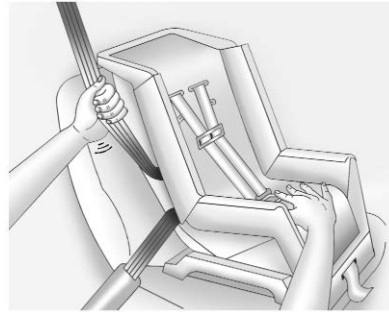

5. To tighten the belt, push down on the child restraint, pull the shoulder portion of the belt to tighten the lap portion of the belt, and feed the shoulder belt back into the retractor. When installing a forward-facing child restraint, it may be helpful to use your knee to push down on the child restraint as you tighten the belt.

   Try to pull the belt out of the retractor to make sure the retractor is locked. If the retractor is not locked, repeat Steps 4 and 5.

6. If the child restraint has a top tether, follow the child restraint manufacturer's instructions regarding the use of the top tether. See *Lower Anchors and Tethers for Children (LATCH System)* ⇨ *76* for more information on using the top tether anchors.
7. Before placing a child in the child restraint, make sure it is securely held in place. To check, grasp the child restraint at the seat belt path and attempt to move it side to side and back and forth. When the child restraint is properly installed, there should be no more than 2.5 cm (1 in) of movement.

To remove the child restraint, unbuckle the vehicle seat belt and let it return to the stowed position. If the top tether is attached to a top tether anchor, disconnect it.

For outboard rear seating positions, if the child restraint cannot be installed properly with the headrest in place, the headrest may be removed. See your dealer for assistance with removal, and store the removed headrest in a secure place. When the child restraint is removed, reinstall the headrest before the seating position is used. For reinstallation instructions, see "Headrest Removal and Reinstallation" under *Lower Anchors and Tethers for Children (LATCH System)* ⇨ *76*.

Securing Child Restraints (With the Seat Belt in the Center Front Seat)

⚠ Warning

A child in a child restraint in the center front seat can be badly injured or killed by the frontal airbags if they inflate. Never secure a child restraint in the center front seat. It is always better to secure a child restraint in a rear seat.

Do not use child restraints in the center front seat position.

Securing Child Restraints (With the Seat Belt in the Front Seat)

This vehicle has airbags. A rear seat is a safer place to secure a forward-facing child restraint. See *Where to Put the Restraint* ⇨ *74*.

There is a switch on the instrument panel endcap that you can use to turn off the front outboard passenger frontal airbag. See *Airbag On-Off Switch* ⇨ *65* for more information, including important safety information.

Never put a rear-facing child restraint in the front. This is because the risk to the rear-facing child is so great if the airbag deploys.

⚠ Warning

A child in a rear-facing child restraint can be seriously injured or killed if the front outboard passenger airbag inflates. This is because the back of the rear-facing child restraint would be very close to the inflating airbag. A child in a forward-facing child restraint can be seriously injured or killed if the front outboard passenger airbag inflates and the passenger seat is in a forward position.

Even if the airbag switch has turned off the front outboard passenger frontal airbag, no system is fail-safe. No one can guarantee that an airbag will not deploy under some unusual circumstance, even though it is turned off.

Secure rear-facing child restraints in a rear seat, even if the airbag is off. If you secure a

(Continued)

Warning (Continued)

forward-facing child restraint in the front outboard passenger seat, always move the seat as far back as it will go. It is better to secure the child restraint in a rear seat.

⚠ Warning

If the airbag readiness light ever comes on and stays on, it means that something may be wrong with the airbag system. For example, the front outboard passenger frontal airbag could inflate even though the airbag on-off switch is turned off.

To help avoid injury to yourself or others, have the vehicle serviced right away. See *Airbag Readiness Light* ⇨ *110* for more information, including important safety information.

If the vehicle does not have a rear seat that will accommodate a rear-facing child restraint, a rear-facing child restraint should not be installed in the vehicle, even if the airbag is off.

If a child restraint uses a top tether, see *Lower Anchors and Tethers for Children (LATCH System)* ⇨ *76* for top tether anchor locations.

Do not secure a child restraint in a position without a top tether anchor if a national or local law requires that the top tether be anchored, or if the instructions that come with the child restraint say that the top tether must be anchored.

In Canada, the law requires that forward-facing child restraints have a top tether, and that the tether be attached.

When using the lap-shoulder belt to secure the child restraint in this position, follow the instructions that came with the child restraint and the following instructions:

1. Move the seat as far back as it will go before securing the forward-facing child restraint. Move the seat upward or the seatback to an upright position, if needed, to get a tight installation of the child restraint.

   When the airbag on-off switch has turned off the front outboard passenger frontal airbag, the OFF indicator in the airbag off light should light and stay lit when you start the vehicle. See *Airbag On-Off Light* ⇨ *110*.

2. Put the child restraint on the seat.

3. Pick up the latch plate, and run the lap and shoulder portions of the vehicle's seat belt through or around the restraint. The child restraint instructions will show you how.

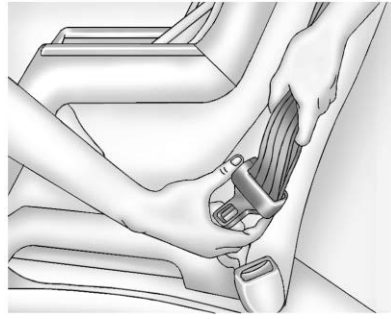

Tilt the latch plate to adjust the belt, if needed.

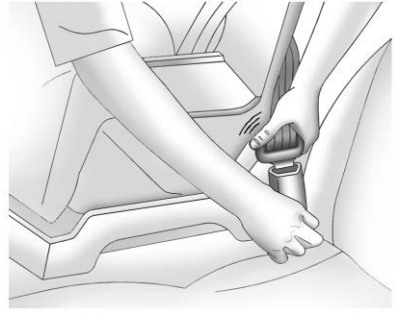

4. Push the latch plate into the buckle until it clicks.

   Position the release button on the buckle, away from the child restraint, so that the seat belt could be quickly unbuckled if necessary.

5. Pull the shoulder belt all the way out of the retractor to set the lock. When the retractor lock is set, the belt can be tightened but not pulled out of the retractor.

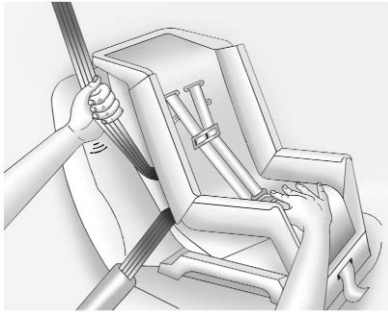

6. To tighten the belt, push down on the child restraint, pull the shoulder portion of the belt to tighten the lap portion of the belt, and feed the shoulder belt back into the retractor. When installing a forward-facing child restraint, it may be helpful to use your knee to push down on the child restraint as you tighten the belt.

   Try to pull the belt out of the retractor to make sure the retractor is locked. If the retractor is not locked, repeat Steps 5 and 6.

7. If the vehicle does not have a rear seat and the child restraint manufacturer recommends using a top tether anchor, attach the top tether to the top tether anchor. Refer to the instructions that came with the child restraint and to *Lower Anchors and Tethers for Children (LATCH System)* ⇨ *76*.

8. Before placing a child in the child restraint, make sure it is securely held in place. To check, grasp the child restraint at the seat belt path and attempt to move it side to side and back and forth. When the child restraint is properly installed, there should be no more than 2.5 cm (1 in) of movement.

To remove the child restraint, unbuckle the vehicle seat belt and let it return to the stowed position. If the top tether is attached to a top tether anchor, disconnect it.

If you turned the airbag off with the switch, turn on the front outboard passenger airbag when you remove the child restraint from the vehicle unless the person who will be sitting there is a member of a passenger airbag risk group. See *Airbag On-Off Switch* ⇨ *65* for more information, including important safety information.

Storage

Storage Compartments

Storage Compartments 91
Instrument Panel Storage 91
Glove Box 91
Cupholders 92
Sunglasses Storage 92
Center Console Storage 93
Floor Console Storage 93

Storage Compartments

⚠ Warning

Do not store heavy or sharp objects in storage compartments. In a crash, these objects may cause the cover to open and could result in injury.

Instrument Panel Storage

If equipped, there is storage under the climate control system.

To access, pull down on the handle.

Glove Box

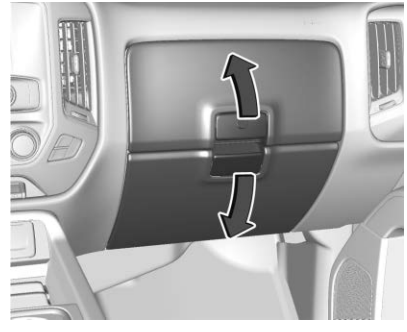

To access the upper glove box, unlock with the key and pull up on the handle.

To access the lower glove box, pull down on the handle.

⚠ Warning

For safety, close the glove box during driving. There is a risk of injury from the open lid or items stored in the glove box.

You and others could be seriously injured.

Cupholders

Front

There may be cupholders on the center front seat console armrest.

Rear

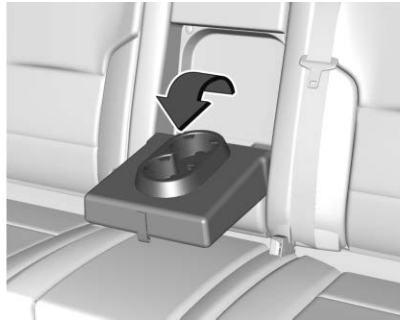

If equipped, pull the rear seat armrest down to access the cupholders.

Sunglasses Storage

If equipped, sunglasses storage is on the overhead console. Press the fixed button on the cover and release to access.

Center Console Storage

Bench Seat

If equipped, pull the front center seat armrest down to access the storage area with cupholders.

Press the button and lift to open. There is a removable divider.

If equipped, there are dual USB ports, an accessory power outlet, and an auxiliary jack inside.

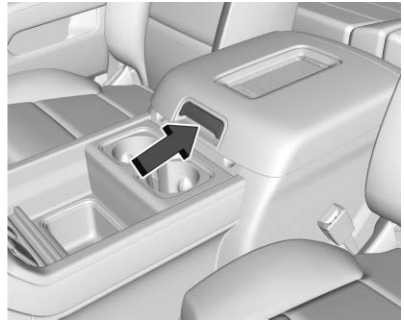

If equipped, press the latch and lift to open. Depending on the options there may be a tote compartment, accessory power outlet, auxiliary jack, and USB port(s) inside. There are openings for power cords on the edge of the storage area.

See *Power Outlets* ⇨ *99*, *USB Port* ⇨ *158*, and *Auxiliary Jack* ⇨ *163*.

Floor Console Storage

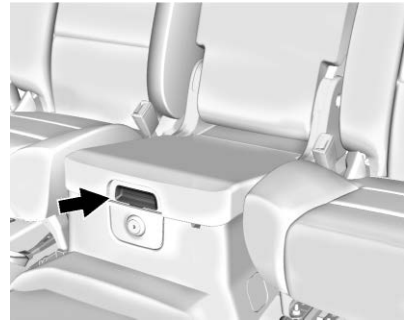

If equipped with front seat floor console storage, unlock with the ignition key, press the button, and lift to open.

Instruments and Controls

Controls

Steering Wheel Adjustment 95
Steering Wheel Controls 95
Horn 96
Windshield Wiper/Washer 96
Compass 97
Clock 97
Power Outlets 99
Wireless Charging 101

Warning Lights, Gauges, and Indicators

Warning Lights, Gauges, and Indicators 103
Instrument Cluster 104
Speedometer 107
Odometer 107
Trip Odometer 107
Tachometer 107
Fuel Gauge 107
Engine Oil Pressure Gauge 108
Engine Coolant Temperature Gauge 108
Voltmeter Gauge 109
Seat Belt Reminders 109
Airbag Readiness Light 110
Airbag On-Off Light 110
Charging System Light 111
Malfunction Indicator Lamp (Check Engine Light) 112
Brake System Warning Light 113
Antilock Brake System (ABS) Warning Light 114
Tow/Haul Mode Light 114
Traction Off Light 115
Wait-to-Start Light 115
Low Fuel Warning Light 115
Diesel Exhaust Fluid (DEF) Warning Light 115
Security Light 116
High-Beam On Light 116
Front Fog Lamp Light 116
Lamps On Reminder 116
Cruise Control Light 116
Power Take-Off Light 117

Information Displays

Driver Information Center (DIC) (Base Level) 117
Driver Information Center (DIC) (Uplevel) 119

Vehicle Messages

Vehicle Messages 122
Engine Power Messages 122
Vehicle Speed Messages 122

Vehicle Personalization

Vehicle Personalization 123

Controls

Steering Wheel Adjustment

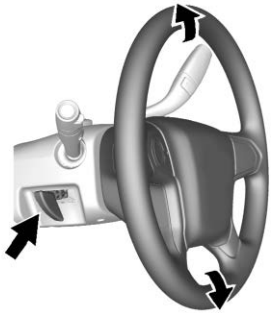

To adjust the steering wheel:

1. Hold the steering wheel and pull the lever.
2. Move the steering wheel up or down.
3. Release the lever to lock the wheel in place.

Do not adjust the steering wheel while driving.

Steering Wheel Controls

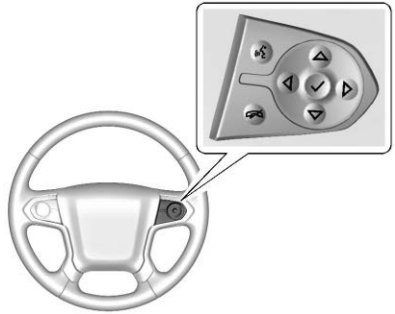

If equipped, some audio controls can be adjusted at the steering wheel.

: For vehicles with OnStar or a Bluetooth system, press to interact with those systems. See *OnStar Overview* ⇨ *421*, *Bluetooth (Overview)* ⇨ *172* or *Bluetooth (Infotainment Controls)* ⇨ *173*, or “Bluetooth (Overview)” in the infotainment manual.

: Press to reject an incoming call or end a current call. Press to mute or unmute the infotainment system when not on a call.

◁ **or** ▷ **:** Press to go to the previous or next menu option.

△ **or** ▽ **:** Press to go to the next or previous selection.

✓ **:** Press to select a highlighted menu option.

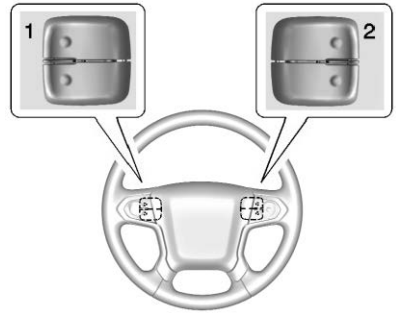

The favorite and volume switches are on the back of the steering wheel.

1. Favorite: When on a radio source, press to select the next or previous favorite. When on a media source, press to select the next or previous track.
2. Volume: Press to increase or decrease the volume.

Horn

To sound the horn, press on the steering wheel.

Windshield Wiper/Washer

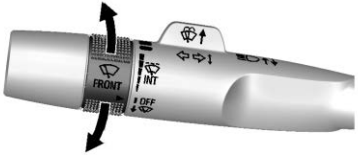

The windshield wiper control is on the turn signal lever.

The windshield wipers are controlled by turning the band with on it.

: Fast wipes.

: Slow wipes.

INT : Turn the band up for more frequent wipes or down for less frequent wipes.

OFF : Turns the windshield wipers off.

: For a single wipe, turn to , then release. For several wipes, hold the band on longer.

Clear ice and snow from the wiper blades before using them. If frozen to the windshield, carefully loosen or thaw them. Damaged wiper blades should be replaced. See *Wiper Blade Replacement* ⇨ *312*.

Heavy snow or ice can overload the wiper motor. An internal circuit breaker to the motor will stop the motor until it cools down.

Wiper Parking

If the ignition is turned off while the wipers are on , , or INT, they will immediately stop.

If the windshield wiper lever is then moved to OFF before the driver door is opened or within 10 minutes, the wipers will restart and move to the base of the windshield.

If the ignition is turned off while the wipers are performing wipes due to windshield washing, the wipers continue to run until they reach the base of the windshield.

Windshield Washer

⚠ Warning

In freezing weather, do not use the washer until the windshield is warmed. Otherwise the washer fluid can form ice on the windshield, blocking your vision.

: Push the paddle with this symbol at the top of the turn signal lever, to spray washer fluid and activate the wipers. The wipers will continue until the paddle is released or the maximum wash time is reached. When the paddle is released, additional wipes may

occur depending on how long the windshield washer had been activated. See *Washer Fluid* ⇨ *304* for information on filling the windshield washer fluid reservoir.

Compass

The vehicle may have a compass display on the Driver Information Center (DIC). The compass receives its heading and other information from the Global Positioning System (GPS) antenna and vehicle speed information.

The compass system is designed to operate for a certain number of miles or degrees of turn before needing a signal from the GPS satellites. When the compass display shows CAL, drive the vehicle for a short distance in an open area where it can receive a GPS signal. The compass system will automatically determine when a GPS signal is restored and provide a heading again.

Clock

Setting the Time and Date with Base Radio Center Stack Controls

To set the time or date:

1. Select Settings on the Home Page, then select Time and Date.
2. Select the desired function.
3. Turn the MENU knob to increase or decrease the value.
4. Press the MENU knob to go to the next value. After the last value is selected, the system will update and return to the Settings menu. Press ◁ BACK to go to the last menu and save the changes.

Auto Set requires an active OnStar or connected service plan.

If auto timing is set, the time displayed on the clock may not update immediately when driving into a new time zone.

To set the clock display:

1. Select Settings on the Home Page, then select Time and Date.
2. Select Clock Display.
3. Turn the MENU knob to Off or On.
4. Press the MENU knob to select.

Press ◁ BACK to go to the last menu and save the changes.

Setting the Time and Date with Base Radio Touchscreen Controls

When Auto Set is enabled the time cannot be manually set.

1. Press ⌂, then touch Settings.
2. Touch Time and Date, then Set Time or Set Date.
3. Touch + or − to adjust the value.
4. Touch ∧ or ∨ to adjust AM or PM for 12 hour format.
5. Touch ↩.

Setting the Clock Display

1. Press ⌂, then touch Settings.
2. Touch Time and Date, then Clock Display.
3. Touch OFF or ON to turn the clock display off or on.
4. Touch ↩.

Using Auto Set

Auto Set requires an active OnStar or connected service plan.

If auto timing is set, the time displayed on the clock may not update immediately when driving into a new time zone.

1. Press ⌂, then touch Settings.
2. Touch Time and Date, then Auto Set.
3. Select from the available selections.
4. Touch ↩.

Setting the 12/24 Hour Format

1. Press ⌂, then touch Settings.
2. Touch Time and Date, then select 12h or 24h format.
3. Touch ↩.

Setting the Date Format

1. Press ⌂, then touch Settings.
2. Touch Time and Date, then Set Date Format.
3. Select DD/MM/YYYY (day/month/year), MM/DD/YYYY (month/day/year), or YYYY/MM/DD (year/month/day) format.
4. Touch ↩.

Setting the Time and Date with Uplevel Radio Touchscreen Controls

To set the time:

1. Touch SETTINGS from the Home Page, then touch Time and Date.
2. Touch Set Time and touch ∧ or ∨ to increase or decrease hours, minutes, and AM or PM. Touch 12–24 Hr for 12 or 24 hour clock.
3. Touch ❮ to go back to the previous menu.

Auto Set requires an active OnStar or connected service plan.

If auto timing is set, the time displayed on the clock may not update immediately when driving into a new time zone.

To set the date:

1. Touch SETTINGS from the Home Page, then touch Time and Date.
2. Touch Set Date and touch ∧ or ∨ to increase or decrease month, day, or year.
3. Touch ❮ to go back to the previous menu.

To set the clock display:

1. Touch SETTINGS and touch Time and Date.
2. Touch Clock Display and touch Off or On to turn the clock display off or on.
3. Touch ❮ to go back to the previous menu.

The clock settings can also be accessed by touching the time display, then touching Set.

Power Outlets

Power Outlets 12-Volt Direct Current

Accessory power outlets can be used to plug in electrical equipment, such as a cell phone or MP3 player.

The vehicle may have up to four accessory power outlets.

Vehicles with a Center Console

- One or two in front of the cupholders on the center console
- One inside the center console
- One on the rear of the center console

Vehicles with Bench Seats

- One on the center stack below the climate control system
- One or two in the storage area on the bench seat

Lift the cover to access and replace when not in use.

The power outlets on the center stack and in front of the cupholders are powered at all times. The power outlets inside the storage area and on the rear of the console are powered when the ignition is on or in ACC/ACCESSORY, or when Retained Accessory Power (RAP) is active.

⚠ Warning

Power is always supplied to the outlets. Do not leave electrical equipment plugged in when the vehicle is not in use because the vehicle could catch fire and cause injury or death.

Caution

Leaving electrical equipment plugged in for an extended period of time while the vehicle is off will drain the battery. Always unplug electrical equipment when not in use and do not plug in equipment that exceeds the maximum 15 amp rating.

Certain power accessory plugs may not be compatible with the accessory power outlet and could overload vehicle or adapter fuses. If a problem is experienced, see your dealer.

When adding electrical equipment, be sure to follow the proper installation instructions included with the equipment. See *Add-On Electrical Equipment* ⇨ *263*.

Caution

Hanging heavy equipment from the power outlet can cause damage not covered by the vehicle warranty. The power outlets are designed for accessory power plugs only, such as cell phone charge cords.

Power Outlet 110/120-Volt Alternating Current

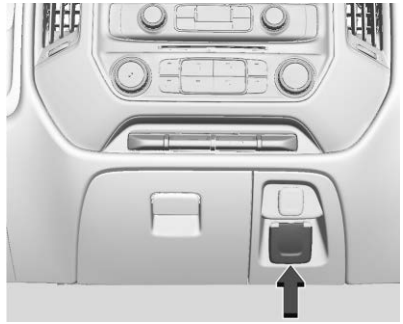

Base Shown, Uplevel Similar

If equipped with this power outlet, it can be used to plug in electrical equipment that uses a maximum limit of 150 watts.

If equipped with a center console, the 110/120-volt power outlet is in front of the cupholders in the center console.

If equipped with bench seats, the 110/120-volt power outlet is on the center stack.

An indicator light on the outlet turns on to show it is in use. The light comes on when the ignition is on, equipment requiring less than 150 watts is plugged into the outlet, and no system fault is detected.

The indicator light does not come on when the ignition is off or if the equipment is not fully seated into the outlet.

If equipment is connected using more than 150 watts or a system fault is detected, a protection circuit shuts off the power supply and the indicator light turns off. To reset the circuit, unplug the item and plug it back in or turn the RAP off and then back on. See *Retained Accessory Power (RAP)* ⇨ *211*.

The power outlet is not designed for the following, and may not work properly if they are plugged in:

- Equipment with high initial peak wattage, such as compressor-driven refrigerators and electric power tools

- Other equipment requiring an extremely stable power supply, such as microcomputer-controlled electric blankets and touch sensor lamps
- Medical equipment

Wireless Charging

The vehicle may have wireless charging on top of the center console. See *Center Console Storage* ⇨ *93*. The system operates at 145 kHz and wirelessly charges one Qi compatible mobile device. The power output of the system is capable of charging at a rate up to 1 amp (5W), as requested by the compatible mobile device. See *Radio Frequency Statement* ⇨ *417*.

To check for phone or other device compatibility:

- See www.my.chevrolet.com/learn.
- Or, see your dealer for details.

⚠ Warning

Wireless charging can affect the operation of an implanted pacemaker or other medical devices. If you have one, it is recommended to consult with your doctor before using the wireless charging system.

The vehicle must be on, in ACC/ACCESSORY, or Retained Accessory Power (RAP) must be active. The wireless charging feature may not correctly indicate charging when the vehicle is in RAP. See *Retained Accessory Power (RAP)* ⇨ *211*.

The operating temperature is −20 °C (−4 °F) to 60 °C (140 °F) for the charging system and 0 °C (32 °F) to 35 °C (95 °F) for the phone.

⚠ Warning

Remove all objects from the charging pad before charging your mobile device. Objects, such as coins, keys, rings, paper clips, or cards, between the phone and charging pad will become very hot. On the rare occasion that the charging system does not detect an object, and the object gets wedged between the phone and charger, remove the phone and allow the object to cool before removing it from the charging pad, to prevent burns.

To charge a mobile device:

1. Remove all objects from the charging pad. The system may not charge if there are any objects between the mobile device and charging pad.
2. Place the mobile device face up against the alignment rib on the charge pad.
3. The ⚡ will appear on the 📞 on the infotainment display. This indicates that the mobile device is properly positioned and charging. If a mobile device is placed on the charging pad and ⚡ does not display, remove the mobile device from the pad, turn it 180 degrees, and wait three seconds before placing/aligning the mobile device on the pad again.

Software Acknowledgements

Certain Wireless Charging Module product from LG Electronics, Inc. ("LGE") contains the open source software detailed below. Refer to the indicated open source licenses (as are included following this notice) for the terms and conditions of their use.

OSS Notice Information

To obtain the source code that is contained in this product, please visit http://opensource.lge.com. In addition to the source code, all referred license terms, warranty disclaimers and copyright notices are available for download. LG Electronics will also provide open source code to you on CD-ROM for a charge covering the cost of performing such distribution (such as the cost of media, shipping, and handling) upon email request to opensource@lge.com. This offer is valid for three (3) years from the date on which you purchased the product.

Freescale-WCT library

Copyright (c) 2012-2014 Freescale Semiconductor, Inc.. All rights reserved.

1. Redistributions of source code must retain the above copyright notice, this list of conditions and the following disclaimer.
2. Redistributions in binary form must reproduce the above copyright notice, this list of conditions and the following disclaimer in the documentation and/or other materials provided with the distribution.
3. Neither the name of the copyright holder nor the names of its contributors may be used to endorse or promote products derived from this software without specific prior written permission.

THIS SOFTWARE IS PROVIDED BY THE COPYRIGHT HOLDERS AND CONTRIBUTORS "AS IS" AND ANY EXPRESS OR IMPLIED WARRANTIES, INCLUDING, BUT NOT LIMITED TO, THE IMPLIED WARRANTIES OF MERCHANTABILITY AND FITNESS FOR A PARTICULAR PURPOSE ARE DISCLAIMED. IN NO EVENT SHALL THE COPYRIGHT HOLDER OR CONTRIBUTORS BE LIABLE FOR ANY DIRECT, INDIRECT, INCIDENTAL, SPECIAL, EXEMPLARY, OR CONSEQUENTIAL DAMAGES (INCLUDING, BUT NOT LIMITED TO, PROCUREMENT OF SUBSTITUTE GOODS OR SERVICES; LOSS OF USE, DATA, OR PROFITS; OR BUSINESS INTERRUPTION) HOWEVER CAUSED AND ON ANY THEORY OF LIABILITY, WHETHER IN CONTRACT, STRICT LIABILITY, OR TORT (INCLUDING NEGLIGENCE OR OTHERWISE) ARISING IN ANY WAY OUT OF THE USE OF THIS SOFTWARE, EVEN IF ADVISED OF THE POSSIBILITY OF SUCH DAMAGE.

Warning Lights, Gauges, and Indicators

Warning lights and gauges can signal that something is wrong before it becomes serious enough to cause an expensive repair or replacement. Paying attention to the warning lights and gauges could prevent injury.

Some warning lights come on briefly when the engine is started to indicate they are working. When one of the warning lights comes on and stays on while driving, or when one of the gauges shows there may be a problem, check the section that explains what to do. Waiting to do repairs can be costly and even dangerous.

Instrument Cluster

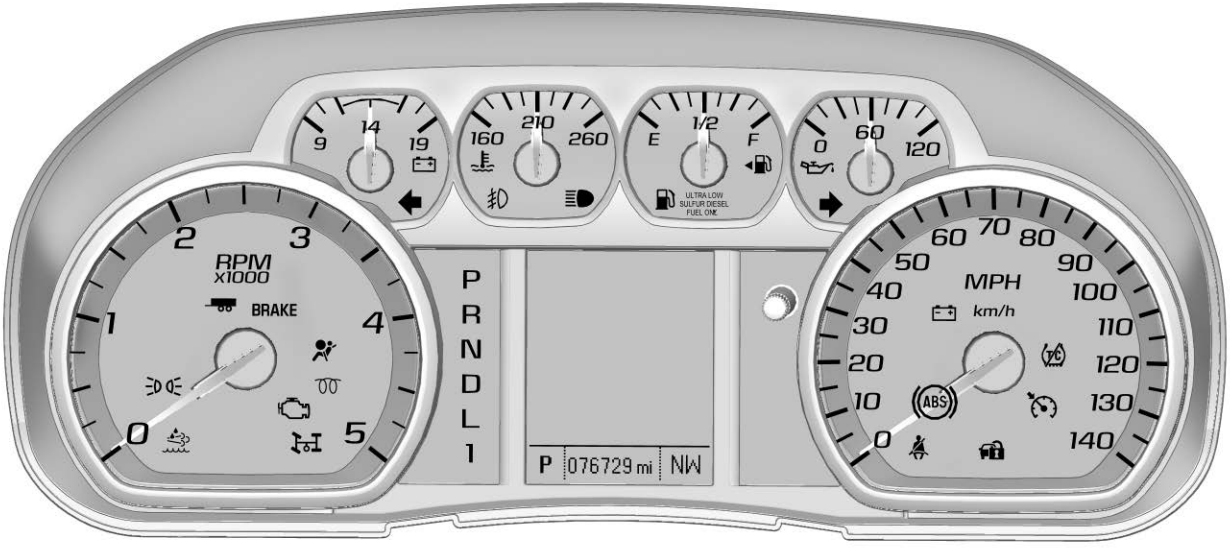

Base Cluster (English Shown, Metric Similar)

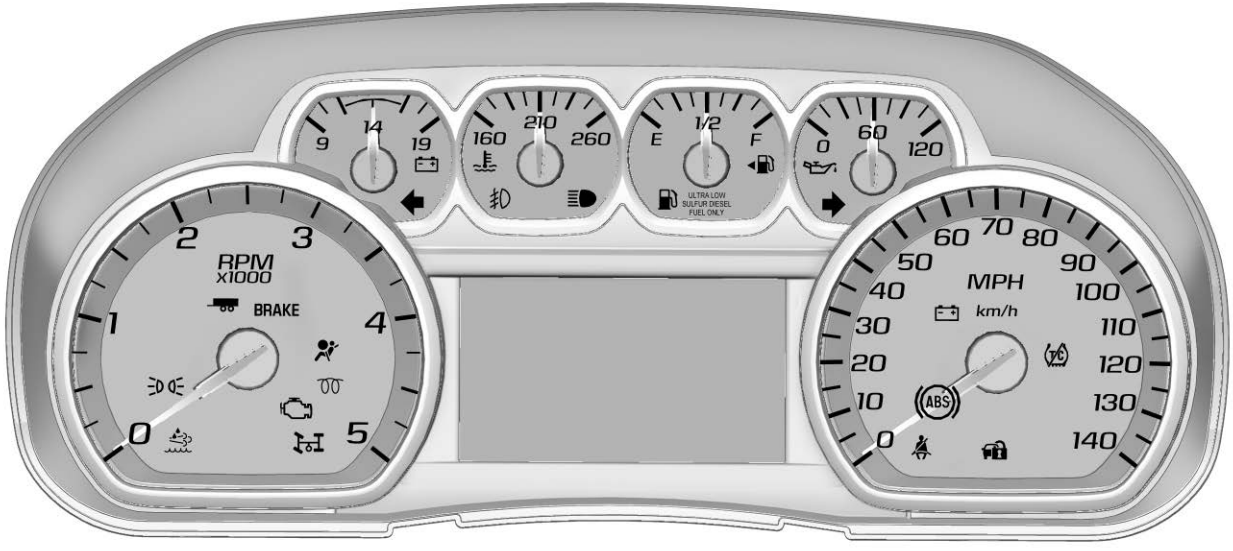

Uplevel Cluster (English Shown, Metric Similar)

Cluster Menu (Uplevel Cluster)

There is an interactive display area in the center of the instrument cluster.

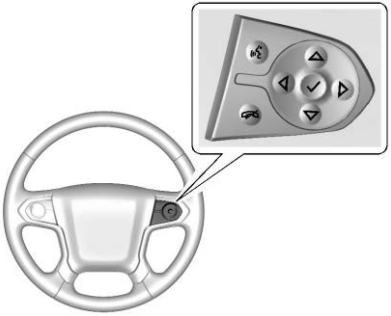

Use the right steering wheel control to open and scroll through the different items and displays.

Press ◁ to access the cluster applications. Use △ or ▽ to scroll through the list of available applications. Not all applications will be available on all vehicles.

- Info App. This is where the selected Driver Information Center (DIC) displays can be viewed. See “Driver Information Center (DIC) (Uplevel)” in the Index.
- Audio
- Phone
- Navigation
- Options

Audio

Press ✓ to select the Audio app, then press ▷ to enter the Audio menu. In the Audio menu browse for music, select from the favorites, or change the audio source. In the main view, use △ or ▽ to change the station or go to the next or previous track.

Phone

Press ✓ to select the Phone app, then press ▷ to enter the Phone menu. In the Phone menu, if there is no active phone call, view recent calls, scroll through contacts, select from the favorites, or change the phone source. If there is an active call, mute the phone or switch to handset operation.

Navigation

Press ✓ to select the Navigation app, then press ▷ to enter the Navigation menu. If there is no active route, you can resume the last route and turn the voice prompts on/off. If there is an active route, you can cancel the route.

Options

Press ✓ to select the Options app. Use △ or ▽ to scroll through items in the Options menu.

Units : Press ▷ while Units is displayed to enter the Units menu. Choose English or metric units by pressing ✓ while the desired item is highlighted. A checkmark will be displayed next to the selected item.

Info Pages : Press ▷ while Info Pages is displayed to enter the Info Pages menu and select the items to

be displayed in the Info app. See “Driver Information Center (DIC) (Uplevel)” in the Index.

Software Information : Press ▷ while Software Information is highlighted to display open source software information.

Speedometer

The speedometer shows the vehicle's speed in either kilometers per hour (km/h) or miles per hour (mph).

Odometer

The odometer shows how far the vehicle has been driven, in either kilometers or miles.

Trip Odometer

The trip odometer shows how far the vehicle has been driven since the trip odometer was last reset.

The trip odometer is accessed and reset through the Driver Information Center (DIC).

See *Driver Information Center (DIC) (Base Level)* ⇨ *117* or *Driver Information Center (DIC) (Uplevel)* ⇨ *119*.

Tachometer

The tachometer displays the engine speed in revolutions per minute (rpm).

Fuel Gauge

When the ignition is on, the fuel gauge indicates about how much fuel is left in the tank.

There is an arrow near the fuel gauge pointing to the side of the vehicle the fuel cap is on.

When the indicator nears empty, the low fuel light comes on. There still is a little fuel left, but the vehicle should be refueled soon.

Here are four things that some owners ask about. None of these show a problem with the fuel gauge:

- At the service station, the fuel pump shuts off before the gauge reads full.
- It takes a little more or less fuel to fill up than the gauge indicated. For example, the gauge may have indicated the tank was half full, but it actually took a little more or less than half the tank's capacity to fill the tank.
- The gauge moves a little while turning a corner or speeding up.

- The gauge takes a few seconds to stabilize after the ignition is turned on, and goes back to empty when the ignition is turned off.

Engine Oil Pressure Gauge

The engine oil pressure gauge shows the engine oil pressure in psi (pounds per square inch) when the engine is running.

Oil pressure can vary with engine speed, outside temperature, coolant temperature, and oil viscosity.

On some models, the oil pump will vary engine oil pressure according to engine needs. Oil pressure may change quickly as the engine speed or load varies. This is normal. If the oil pressure warning light or Driver Information Center (DIC) message indicates oil pressure outside the normal operating range, check the vehicle's oil as soon as possible.

See *Engine Oil* ⇨ *291*.

Caution
Lack of proper engine oil maintenance can damage the engine. Driving with the engine oil low can also damage the engine. The repairs would not be covered by the vehicle warranty. Check the oil level as soon as possible. Add oil if required, but if the oil level is within the operating range and the oil pressure is still low, have the vehicle serviced. Always follow the maintenance schedule for changing engine oil.

Engine Coolant Temperature Gauge

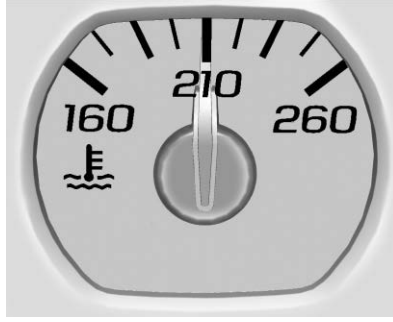

This gauge measures the temperature of the vehicle's engine coolant.

While driving under normal operating conditions, if the needle moves into the red warning area, the engine is too hot. Pull off the road, stop the vehicle, and turn off the engine as soon as possible.

Voltmeter Gauge

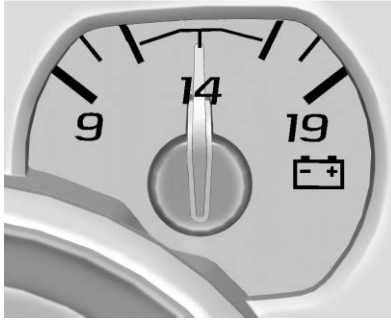

When the ignition is on, this gauge indicates the battery voltage.

When the engine is running, this gauge shows the condition of the charging system. The gauge can transition from a higher to lower or a lower to higher reading. This is normal. If the vehicle is operating outside the normal operating range, the charging system light comes on. See *Charging System Light* ⇨ *111* for more information. The voltmeter gauge may also read lower when in fuel economy mode. This is normal.

Readings outside the normal operating range can also occur when a large number of electrical accessories are operating in the vehicle and the engine is left idling for an extended period. This condition is normal since the charging system is not able to provide full power at engine idle. As engine speeds are increased, this condition should correct itself as higher engine speeds allow the charging system to create maximum power.

The vehicle can only be driven for a short time with the readings outside the normal operating range. If the vehicle must be driven, turn off all accessories, such as the radio and air conditioner.

Readings outside the normal operating range indicate a possible problem in the electrical system. Have the vehicle serviced as soon as possible.

Seat Belt Reminders

Seat Belt Reminder Light

There is a seat belt reminder light on the instrument cluster.

When the vehicle is started, this light flashes and a chime may come on to remind the driver to fasten their seat belt. Then the light stays on solid until the belt is buckled. This cycle may continue several times if the driver remains or becomes unbuckled while the vehicle is moving.

If the driver seat belt is buckled, neither the light nor the chime comes on.

Airbag Readiness Light

This light shows if there is an electrical problem with the airbag system. The system check includes the airbag sensor(s), passenger sensing system (if equipped), the pretensioners, the airbag modules, the wiring, and the crash sensing and diagnostic module. For more information on the airbag system, see *Airbag System* ⇨ *61*.

The airbag readiness light comes on for several seconds when the vehicle is started. If the light does not come on then, have it fixed immediately.

⚠ Warning

If the airbag readiness light stays on after the vehicle is started or comes on while driving, it means the airbag system might not be working properly. The airbags in the vehicle might not inflate in a crash, or they could even inflate without a crash. To help avoid injury, have the vehicle serviced right away.

If there is a problem with the airbag system, a Driver Information Center (DIC) message may also come on.

Airbag On-Off Light

If the vehicle has an airbag on-off switch, it also has a passenger airbag status indicator located in the overhead console.

When the vehicle is started, the passenger airbag status indicator ON and OFF will light for several seconds as a system check. Then, after several more seconds, the status indicator ON or OFF will light to let you know the status of the front outboard passenger frontal airbag.

When the front outboard passenger airbag is manually turned off using the airbag on-off switch on the instrument panel endcap, the indicator light OFF will come on and stay on as a reminder that the airbag has been turned off. This light will go off when the airbag has been turned on. See *Airbag On-Off Switch* ⇨ *65* for more information, including important safety information.

⚠ Warning

If the front outboard passenger frontal airbag is turned off for a person who is not in a risk group identified by the national government, that person will not have the extra protection of an airbag. In a crash, the airbag will not be able to inflate and help protect the person sitting there. Do not turn off the front outboard passenger frontal airbag unless the person sitting there is in a risk group identified by the national government. See *Airbag On-Off Switch* ⇨ *65* for more information, including important safety information.

⚠ Warning

If the airbag readiness light ever comes on and stays on, it means that something may be wrong with the airbag system. For example, the front outboard passenger frontal airbag could inflate even though the airbag on-off switch is turned off.

To help avoid injury to yourself or others, have the vehicle serviced right away. See *Airbag Readiness Light* ⇨ *110* for more information, including important safety information.

If the word ON is lit, it means that the front outboard passenger frontal airbag is enabled, and may inflate. See *Airbag On-Off Switch* ⇨ *65* for more information, including important safety information.

If, after several seconds, both status indicator lights remain on, or if there are no lights at all, there may be a problem with the lights or the airbag on-off switch. See your dealer for service.

Charging System Light

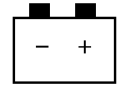

The charging system light comes on briefly when the ignition is turned on, but the engine is not running, as a check to show the light is working. It should go out when the engine is started.

If the light stays on, or comes on while driving, there may be a problem with the electrical charging system. Have it checked by your dealer. Driving while this light is on could drain the battery.

When this light comes on, or is flashing, the Driver Information Center (DIC) also displays a message.

If a short distance must be driven with the light on, be sure to turn off all accessories, such as the radio and air conditioner.

Malfunction Indicator Lamp (Check Engine Light)

This light is part of the vehicle's emission control on-board diagnostic system. If this light is on while the engine is running, a malfunction has been detected and the vehicle may require service. The light should come on to show that it is working when the ignition is on with the engine not running. See *Ignition Positions* ⇨ *206*.

This light may also come on when the system has detected a problem with the Diesel Exhaust Fluid (DEF) management system. See *Diesel Exhaust Fluid* ⇨ *218*.

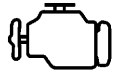

Malfunctions are often indicated by the system before any problem is noticeable. Being aware of the light and seeking service promptly when it comes on may prevent damage.

Caution

If the vehicle is driven continually with this light on, the emission control system may not work as well, the fuel economy may be lower, and the vehicle may not run smoothly. This could lead to costly repairs that might not be covered by the vehicle warranty.

Caution

Modifications to the engine, transmission, exhaust, intake, or fuel system, or the use of replacement tires that do not meet the original tire specifications, can cause this light to come on. This could lead to costly repairs not covered by the vehicle warranty. This could also affect the vehicle's ability to pass an Emissions Inspection/ Maintenance test. See *Accessories and Modifications* ⇨ *286*.

When the light is on, a malfunction has been detected. Diagnosis and service may be required.

Poor fuel quality can cause inefficient engine operation and poor driveability, which may go away once the engine is warmed up. If this occurs, change the fuel brand. It may require at least one full tank of the proper fuel to turn the light off. See *Fuel for Diesel Engines* ⇨ *238*.

If the light remains on, see your dealer.

Emissions Inspection and Maintenance Programs

If the vehicle requires an Emissions Inspection/Maintenance test, the test equipment will likely connect to the vehicle's Data Link Connector (DLC).

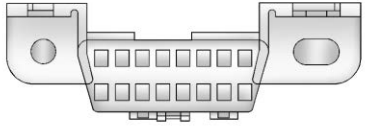

The DLC is under the instrument panel to the left of the steering wheel. Connecting devices that are not used to perform an Emissions Inspection/Maintenance test or to service the vehicle may affect vehicle operation. See *Add-On Electrical Equipment* ⇨ *263*. See your dealer if assistance is needed.

The vehicle may not pass inspection if:

- The light is on when the engine is running.
- The light does not come on when the ignition is on with the engine not running.
- Critical emission control systems have not been completely diagnosed. If this happens, the vehicle would not be ready for inspection and might require several days of routine driving before the system is ready for inspection. This can happen if the 12-volt battery has recently been replaced or run down, or if the vehicle has recently been serviced.

See your dealer if the vehicle will not pass or cannot be made ready for the test.

Brake System Warning Light

The vehicle brake system consists of two hydraulic circuits. If one circuit is not working, the remaining circuit can still work to stop the vehicle. For normal braking performance, both circuits need to be working.

If the warning light comes on, there is a brake problem. Have the brake system inspected right away.

BRAKE

This light should come on briefly when the engine is started. If it does not come on then, have it fixed so it will be ready to warn you if there is a problem.

When the ignition is on, the brake system warning light also comes on when the parking brake is set. The light stays on if the parking brake does not fully release. If it stays on after the parking brake is fully released, it means the vehicle has a brake problem.

If the light comes on while driving, pull off the road and stop carefully. The pedal might be harder to push, or the pedal can go closer to the floor. It may take longer to stop. If the light is still on, have the vehicle towed for service. See *Towing the Vehicle* ⇨ *339*.

⚠ Warning

The brake system might not be working properly if the brake system warning light is on. Driving with the brake system warning light on can lead to a crash. If the light is still on after the vehicle has been pulled off the road and carefully stopped, have the vehicle towed for service.

Antilock Brake System (ABS) Warning Light

This light comes on briefly when the engine is started.

If the light does not come on, have it fixed so it will be ready to warn if there is a problem.

If the light comes on while driving, stop as soon as it is safely possible and turn off the vehicle. Then start the engine again to reset the system. If the ABS light stays on, or comes on again while driving, the vehicle needs service. A chime may also sound when the light comes on steady.

If the ABS light is the only light on, the vehicle has regular brakes, but the antilock brakes are not functioning.

If both the ABS and the brake system warning light are on, the vehicle's antilock brakes are not functioning and there is a problem with the regular brakes. See your dealer for service.

See *Brake System Warning Light* ⇨ *113*.

Tow/Haul Mode Light

For vehicles with the Tow/Haul Mode feature, this light comes on when the Tow/Haul Mode has been activated.

See *Tow/Haul Mode* ⇨ *225*.

Traction Off Light

This light comes on briefly while starting the engine. If it does not, have the vehicle serviced by your dealer. If the system is working normally, the indicator light then turns off.

The traction off light comes on when the Traction Control System (TCS) has been turned off by pressing and releasing the TCS button.

If the TCS is off, wheel spin is not limited. Adjust driving accordingly.

See *Traction Control System (TCS)* ⇨ *233*.

Wait-to-Start Light

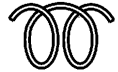

This light comes on briefly while starting the engine, as a check to show the light is working.

If the wait-to-start light comes on, the glow plug system is required and operating. Wait until the light turns off before starting the engine. This light may not come on in warm temperatures.

The fast warm-up glow plug system makes the wait-to-start light stay on for a shorter amount of time than most diesel engines.

See *Starting the Diesel Engine* ⇨ *208*.

Low Fuel Warning Light

This light is near the fuel gauge and comes on briefly when the ignition is turned on as a check to show it is working.

It also comes on when the fuel tank is low on fuel. The light turns off when fuel is added. If it does not, have the vehicle serviced.

Diesel Exhaust Fluid (DEF) Warning Light

This light, a Driver Information Center (DIC) message, and a chime come on when there is an issue with the Diesel Exhaust Fluid.

If the DEF level has not been corrected, the light will continue to flash when the vehicle is started. The vehicle's speed may also be limited.

Also see *Diesel Exhaust Fluid* ⇨ *218*.

Security Light

The security light should come on briefly as the engine is started. If it does not come on, have the vehicle serviced by your dealer. If the system is working normally, the indicator light turns off.

If the light stays on and the engine does not start, there could be a problem with the theft-deterrent system. See *Immobilizer Operation* ⇨ *38*.

High-Beam On Light

This light comes on when the high-beam headlamps are in use.

See *Headlamp High/Low-Beam Changer* ⇨ *131*.

Front Fog Lamp Light

For vehicles with fog lamps, this light comes on when the fog lamps are on.

The light goes out when the fog lamps are turned off. See *Fog Lamps* ⇨ *134*.

Lamps On Reminder

This light comes on when the exterior lamps are in use. See *Exterior Lamp Controls* ⇨ *130*.

Cruise Control Light

For vehicles with cruise control, the cruise control light is white when the cruise control is on and ready, and turns green when the cruise control is set and active.

The light turns off when the cruise control is turned off. See *Cruise Control* ⇨ *234*.

Power Take-Off Light

The vehicle may have a Power Take-Off (PTO) light. Under normal operating conditions, the PTO light will remain on throughout the PTO operating cycle. If all conditions required to engage PTO have not been met when enabling PTO, the PTO light will turn on, then turn off after one second. See *Power Take-Off (PTO)* ⇨ *266*.

Information Displays

Driver Information Center (DIC) (Base Level)

The DIC displays are shown in the center of the instrument cluster. The displays show the status of many vehicle systems. The trip odometer reset stem in the instrument cluster is used to access the DIC menu items.

DIC Menu Items

Turn the trip odometer reset stem to scroll through the following menu items:

- Digital Speedometer
- Trip
- Fuel Range
- Average Fuel Economy
- Remaining Oil Life
- Diesel Exhaust Fluid Level
- Transmission Fluid Temperature
- Trailer Brake
- Hourmeter
- Unit

Digital Speedometer

The speedometer shows how fast the vehicle is moving in either kilometers per hour (km/h) or miles per hour (mph). The speedometer cannot be reset.

Trip

Turn the trip odometer reset stem until TRIP displays. The current distance traveled, in either kilometers (km) or miles (mi), since the last reset for the trip odometer is shown. The trip odometer can be reset to zero by pressing and holding the trip odometer reset stem while the trip odometer is displayed.

Fuel Range

This display shows the approximate distance the vehicle can be driven without refueling. The fuel range estimate is based on an average of the vehicle's fuel economy over recent driving history and the amount of fuel remaining in the fuel tank. Fuel range cannot be reset.

Average Fuel Economy

The Average Fuel Economy display shows the approximate average liters per 100 kilometers (L/100 km) or miles per gallon (mpg). This number reflects only the approximate average fuel economy that the vehicle has right now, and will change as driving conditions change. This number is based on the number of L/100 km (mpg) recorded since the last time this menu item was reset. Reset this display by pressing the trip odometer reset stem.

Remaining Oil Life

Turn the trip odometer reset stem until REMAINING OIL LIFE displays. An estimate of the oil's remaining useful life is shown. REMAINING OIL LIFE 99% means 99% of the current oil life remains.

When the remaining oil life is low, the CHANGE ENGINE OIL SOON message will appear on the display. The oil should be changed as soon as possible. See *Engine Oil* ⇨ *291*. In addition to the engine oil life system monitoring the oil life, additional maintenance is recommended. See *Maintenance Schedule* ⇨ *354*.

The Oil Life display must be reset after each oil change. It will not reset itself. Do not reset the Oil Life display at any time other than when the oil has just been changed. It cannot be reset accurately until the next oil change. To reset the engine oil life system, see *Engine Oil Life System* ⇨ *294*.

Diesel Exhaust Fluid Level

The Diesel Exhaust Fluid (DEF) level will be displayed as either OK, XX%, or LOW. When LOW appears on the display, add DEF as soon as possible. See *Diesel Exhaust Fluid* ⇨ *218*.

Transmission Fluid Temperature

The temperature of the automatic transmission fluid displays in either degrees Celsius (°C) or degrees Fahrenheit (°F).

Trailer Brake

On vehicles with the Integrated Trailer Brake Control (ITBC) system, turn the trip odometer reset stem until TRAILER GAIN and TRAILER OUTPUT displays.

TRAILER GAIN shows the Trailer Gain setting. This setting can be adjusted from 0.0 to 10.0 with either a trailer connected or disconnected.

TRAILER OUTPUT shows the power output to the trailer anytime a trailer with electric brakes is connected. Output is displayed as a bar graph. Dashes may appear in the TRAILER OUTPUT display if a trailer is not connected.

Hourmeter

This display shows the total number of hours the engine has run.

Unit

This will change the displays on the instrument cluster and DIC to either metric or English (US) measurements. To change the units, press the trip odometer reset stem when UNITS is displayed to enter

the Unit menu. Turn the trip odometer reset stem to switch between English and metric. Press the trip odometer reset stem when the desired setting is displayed.

Compass

The vehicle may have a compass in the DIC. See *Compass* ⇨ *97*.

Driver Information Center (DIC) (Uplevel)

The DIC displays are shown in the center of the instrument cluster in the Info app. See *Instrument Cluster* ⇨ *104*. The displays show the status of many vehicle systems. The controls for the DIC are on the right steering wheel control.

△ **or** ▽ **:** Press to move up or down in a list. In the main view, press up and down to move between different info app pages.

◁ **or** ▷ **:** Press to move between the interactive display zones in the cluster.

✓ **:** Press to open a menu or select a menu item. Press and hold to reset values on certain screens.

DIC Info Page Options

The info pages on the DIC can be turned on or off through the Options menu.

1. Press ◁ to access the cluster applications.
2. Press △ or ▽ to scroll to the Options application.
3. Press ✓ to enter the Options menu.
4. Scroll to Info Pages and press ▷.
5. Press △ or ▽ to move through the list of possible information displays.
6. Press ✓ while an item is highlighted to select or deselect that item. When an item is selected, a checkmark will appear next to it.

DIC Info Pages

The following is the list of all possible DIC info page displays. Some may not be available for your particular vehicle. Some items may not be turned on by default but can be turned on through the Options app. See “DIC Info Page Options” earlier in this section.

Speed : Shows the vehicle speed in either kilometers per hour (km/h) or miles per hour (mph). If equipped, press ▷ to open the menu and select to display speed limit signs.

Trip A or Trip B : Shows the current distance traveled, in either kilometers (km) or miles (mi), since the trip odometer was last reset.

This also shows the approximate average liters per 100 kilometers (L/100 km) or miles per gallon (mpg). This number is calculated based on the number of L/100 km (mpg) recorded since the last time this menu item was reset. This number reflects only the approximate average fuel economy that the vehicle has right now, and will change as driving conditions change.

Press and hold ✓ while this display is active to reset the trip odometer and the average fuel economy. Trip A and Trip B can also be reset by pressing ▷ and choosing reset.

Fuel Range : Shows the approximate distance the vehicle can be driven without refueling. LOW will be displayed when the vehicle is low on fuel. The fuel range estimate is based on an average of the vehicle's fuel economy over recent driving history and the amount of fuel remaining in the fuel tank.

Oil Life : Shows an estimate of the oil's remaining useful life. If REMAINING OIL LIFE 99% is displayed, that means 99% of the current oil life remains.

When the remaining oil life is low, the CHANGE ENGINE OIL SOON message will appear on the display. The oil should be changed as soon as possible. See *Engine Oil* ⇨ *291*. In addition to the engine oil life system monitoring the oil life, additional maintenance is recommended in the Maintenance Schedule. See *Maintenance Schedule* ⇨ *354*.

The Oil Life display must be reset after each oil change. It will not reset itself. Do not reset the Oil Life display at any time other than when the oil has just been changed. It cannot be reset accurately until the next oil change. To reset the engine oil life system, press and hold ✓ for several seconds while the Oil Life display is active. See *Engine Oil Life System* ⇨ *294*.

Fuel Economy : The center displays the approximate instantaneous fuel economy as a number and bar graph. Displayed above the bar graph is a running average of fuel economy for the most recently traveled selected distance. Displayed below the bar graph is the best average fuel economy that has been achieved for the selected distance. The selected distance is displayed at the top of the page as “last xxx mi/km.”

Press ▷ to select the distance or reset best value. Use △ and ▽ to choose the distance and press ✓. Press △ and ▽ to select “Reset Best Score.” Press ✓ to reset the

best average fuel economy. After reset, the momentary average fuel economy will display.

The display provides information on how current driving behavior affects the running average and how well recent driving compares to the best that has been achieved for the selected distance.

Timer : This display can be used as a timer. To start the timer, press ✓ while this display is active. The display will show the amount of time that has passed since the timer was last reset. To stop the timer, press ✓ briefly while this display is active and the timer is running. To reset the timer to zero, press and hold ✓ while this display is active, or press ▷ and select reset.

Speed Limit (If Equipped) : Shows sign information, which comes from a roadway database in the onboard navigation.

Engine Hours : Shows the total number of hours the engine has run.

Fuel Filter Life : This display shows an estimate of the fuel filter's remaining useful life. If 90% Fuel Filter Life Remaining is displayed, it means 90% of the current fuel filter life remains. The fuel filter life system will alert when to change the fuel filter on a schedule consistent with your driving conditions. When the remaining fuel filter life is low, the CHANGE FUEL FILTER message will appear on the display. Change the fuel filter as soon as possible.

Diesel Exhaust Fluid (DEF) Level : The DEF level will be displayed as either OK, XX%, or LOW. When LOW appears on the display, add DEF as soon as possible. See *Diesel Exhaust Fluid* ⇨ *218*.

Transmission Fluid Temperature : Shows the temperature of the automatic transmission fluid in either degrees Celsius (°C) or degrees Fahrenheit (°F).

Trailer Brake (If Equipped) : On vehicles with the Integrated Trailer Brake Control (ITBC) system, the trailer brake display appears in the DIC.

TRAILER GAIN shows the trailer gain setting. This setting can be adjusted from 0.0 to 10.0 with either a trailer connected or disconnected.

TRAILER OUTPUT shows the power output to the trailer anytime a trailer with electric brakes is connected. Output is displayed as a bar graph. Dashes may appear in the OUTPUT display if a trailer is not connected.

Off Road : Displays vehicle pitch and roll information, road wheel angle, and four-wheel drive (4WD) status.

Blank Page : Shows no information.

Vehicle Messages

Messages displayed on the DIC indicate the status of the vehicle or some action that may be needed to correct a condition. Multiple messages may appear one after another.

The messages that do not require immediate action can be acknowledged and cleared by pressing ✓. The messages that require immediate action cannot be cleared until that action is performed.

All messages should be taken seriously; clearing the message does not correct the problem.

If a SERVICE message appears, see your dealer.

Follow the instructions given in the messages. The system displays messages regarding the following topics:

- Service Messages
- Fluid Levels
- Vehicle Security
- Brakes
- Ride Control Systems
- Driver Assistance Systems
- Cruise Control
- Lighting and Bulb Replacement
- Wiper/Washer Systems
- Doors and Windows
- Seat Belts
- Airbag Systems
- Engine and Transmission
- Battery

Engine Power Messages

ENGINE POWER IS REDUCED

This message displays when the vehicle's propulsion power is reduced. Reduced propulsion power can affect the vehicle's ability to accelerate. If this message is on, but there is no observed reduction in performance, proceed to your destination. The performance may be reduced the next time the vehicle is driven. The vehicle may be driven while this message is on, but maximum acceleration and speed may be reduced. Anytime this message stays on, or displays repeatedly, the vehicle should be taken to your dealer for service as soon as possible.

Vehicle Speed Messages

SPEED LIMITED TO XXX KM/H (MPH)

This message shows that the vehicle speed has been limited to the speed displayed. The limited speed is a protection for various propulsion and vehicle systems, such as lubrication, thermal, suspension, Teen Driver if equipped, or tires.

Vehicle Personalization

Use the audio system controls to access the personalization menus for customizing vehicle features.

The following are all possible personalization features. Depending on the vehicle, some may not be available.

Base Radio Audio System Controls

MENU : Press to enter menus and select menu items. Turn to scroll through the menus.

◁ **BACK :** Press to return to the previous menu or exit.

Base Radio with Touchscreen Audio System Controls

⌂ **:** Press to access the Home Page Menu.

▲ **or** ▼ **:** Touch to scroll through the menus or setup items.

⮌ **:** Touch to exit or return to the previous screen or menu.

Uplevel Radio Audio System Controls

1. Touch the desired feature to display a list of available options.
2. Select the desired feature setting.
3. Press ◁ BACK on the center stack or touch ❮ to return to the previous menu or exit.

Turn the ignition on to access the Settings menu, then select SETTINGS from the Home Page on the infotainment display.

Personalization Menus

The following list of menu items may be available:

- Time and Date
- Rear Seat Reminder
- Language
- Valet Mode
- Radio
- Vehicle
- Bluetooth
- Apple CarPlay
- Android Auto
- USB Auto Launch
- Turn Display Off
- Voice
- Display
- Return to Factory Settings
- Software Information
- Wi-Fi
- Power Take-Off (PTO)

Detailed information for each menu follows.

Time and Date

Manually set the time and date. See *Clock* ⇨ *97*.

Rear Seat Reminder

This allows for a chime and a message when the rear door has been opened before or during operation of the vehicle.

Select Off or On.

Language

Select Language, then select from the available language(s).

The selected language will display on the system, and voice recognition will reflect the selected language.

Valet Mode

This will lock the infotainment system and steering wheel controls. It may also limit access to vehicle storage locations, if equipped.

To enable valet mode:

1. Enter a four-digit code on the keypad.
2. Select Enter to go to the confirmation screen.
3. Re-enter the four-digit code.

Touch Lock or Unlock to lock or unlock the system. Touch Back to go back to the previous menu.

Radio

Select and the following may display:

- Manage Favorites
- Number of Favorites Shown
- Audible Touch Feedback
- Text Scroll
- Tone Settings
- Auto Volume
- Maximum Startup Volume
- Audio Cue Volume

Manage Favorites

This allows favorites to be edited. See “Manage Favorites” in “Radio Setup” under *Home Page (Base Radio with Touchscreen)* ⇨ *147* or *Home Page (Base Radio)* ⇨ *145* or “Manage Favorites” in “Settings” under “Radio” in the infotainment manual.

Number of Favorites Shown

Select to set the number of favorites to display.

Select the desired number or select Auto and the infotainment system will automatically adjust the number of favorites shown.

Audible Touch Feedback

This allows Audible Touch Feedback to be turned on or off.

Select Off or On.

Text Scroll

Select to see text scroll on the screen.

Select Off or On.

Tone Settings

Select to adjust the radio tone. See “Tone Settings” in *AM-FM Radio (Base Radio with Touchscreen)* ⇨ *150* or *AM-FM Radio (Base Radio)* ⇨ *148*.

Auto Volume

This feature adjusts the volume based on vehicle speed and ambient noise.

Select Off, Low, Medium-Low, Medium, Medium-High, or High.

Maximum Startup Volume

This feature sets the maximum startup volume. If the vehicle is started and the volume is greater

than this level, the volume is adjusted to this level. To set the maximum startup volume, turn the MENU knob or touch + or − to increase or decrease.

Audio Cue Volume

This feature sets the volume of audio files played at system startup and shutdown.

Select On, then touch + or − to increase or decrease the volume.

Vehicle

Select and the following may display:

- Climate and Air Quality
- Comfort and Convenience
- Lighting
- Power Door Locks
- Remote Lock, Unlock, Start

Climate and Air Quality

Select and the following may display:

- Elevated Idle
- Auto Fan Speed
- Auto Rear Defog

Elevated Idle

This allows the feature to be turned on and off. See “Elevated Idle” in *Starting the Diesel Engine* ⇨ *208*.

Select Off or On.

Auto Fan Speed

This feature will set the auto fan speed.

Select Low, Medium, or High.

Auto Rear Defog

This feature will automatically turn on the rear defogger when it is cold outside.

Select Off or On.

Comfort and Convenience

Select and the following may display:

- Chime Volume

Chime Volume

This allows the selection of the chime volume level.

Turn the MENU knob or touch + or − to adjust the volume.

Lighting

Select and the following may display:

- Vehicle Locator Lights
- Exit Lighting

Vehicle Locator Lights

This feature will flash the exterior lamps and allows some of the exterior lamps and most of the interior lamps to turn on briefly when 🔓 on the Remote Keyless Entry (RKE) transmitter is pressed to locate the vehicle.

Select Off or On.

Exit Lighting

This allows the selection of how long the exterior lamps stay on when leaving the vehicle when it is dark outside.

Select Off, 30 Seconds, 60 Seconds, or 120 Seconds.

Power Door Locks

Select and the following may display:

- Unlocked Door Anti Lock Out
- Auto Door Unlock
- Delayed Door Lock

Unlocked Door Anti Lock Out

When on, this feature will keep the driver door from locking when the door is open. If Off is selected, the Delayed Door Lock menu will be available.

Select Off or On.

Auto Door Unlock

This allows selection of which of the doors will automatically unlock when the vehicle is shifted into P (Park).

Select Off, All Doors, or Driver Door.

Delayed Door Lock

When on, this feature will delay the locking of the doors. To override the delay, press the power door lock switch on the door.

Select Off or On.

Remote Lock, Unlock, Start

Select and the following may display:

- Remote Unlock Light Feedback
- Remote Lock Feedback
- Remote Door Unlock
- Remote Start Auto Heat Seats
- Remote Window Operation

Remote Unlock Light Feedback

When on, the exterior lamps will flash when unlocking the vehicle with the RKE transmitter.

Select Off or Flash Lights.

Remote Lock Feedback

This allows selection of what type of feedback is given when locking the vehicle with the RKE transmitter.

Select Off, Lights and Horn, Lights Only, or Horn Only.

Remote Door Unlock

This allows selection of which doors will unlock when pressing 🔓 on the RKE transmitter.

Select All Doors or Driver Door.

Remote Start Auto Heat Seats

If equipped and turned on, this feature will turn the heated seats on when using remote start on cold days.

Select Off or On.

Remote Window Operation

If equipped, this feature enables the remote operation of all windows from the RKE transmitter. See “Remote Window Operation” in *Power Windows* ⇨ *42*.

Select Off or On.

Bluetooth

Select and the following may display:

- Pair New Device
- Discoverable
- Device Information
- Device Management
- Change Pairing PIN
- Ringtones

- Sort Order
- Voice Mail Numbers
- Text Message Alerts

Pair New Device

Select to pair a new device. See "Pairing" under *Bluetooth (Overview)* ⇨ *172* or *Bluetooth (Infotainment Controls)* ⇨ *173* or "Pairing" in "Infotainment Controls" under "Bluetooth" in the infotainment manual.

Discoverable

This allows the system to find a device.

Select Off or On.

Device Information

See information about the device name, address, and PIN code.

Device Management

Select to connect to a different phone source, disconnect a phone, or delete a phone.

Change Pairing PIN

Select to change the PIN of a device.

Ringtones

Select to change the ring tone for the specific phone. The phone does not need to be connected to change the ring tones.

Sort Order

Select to change the order of the contacts list.

Select First/Last or Last/First.

Voice Mail Numbers

This feature displays the voice mail number for all connected phones. To change the voice mail number, select EDIT. Type a new number, then select Save.

Text Message Alerts

This allows the feature to be turned on or off.

Select Off or On.

Apple CarPlay

Select and the following may display:

- Apple CarPlay
- Manage Apple CarPlay Devices

Apple CarPlay

This feature allows Apple devices to be connected to the infotainment system through a USB port.

Select Off or On.

Manage Apple CarPlay Devices

Select to manage Apple devices. Apple CarPlay must be on for this feature to be accessed.

Android Auto

Select and the following may display:

- Android Auto
- Manage Android Auto Devices

Android Auto

This feature allows Android devices to be connected to the infotainment system through a USB port.

Select Off or On.

Manage Android Auto Devices

Select to manage Android devices. Android Auto must be on for this feature to be accessed.

USB Auto Launch

This allows Android and Apple CarPlay devices to automatically connect when plugged into the USB port.

Select Off or On.

Turn Display Off

Touch to turn the display off. Touch anywhere on the screen or any radio button to turn the screen back on.

Voice

Select and the following may display:

- Confidence Threshold
- Prompt Length
- Audio Feedback Speed
- Display “What Can I Say?” Tips

Confidence Threshold

This feature allows the adjustment of the sensitivity of the speech recognition system.

Select Confirm More or Confirm Less.

Prompt Length

This feature adjusts the voice prompt length.

Select Short or Long.

Audio Feedback Speed

This feature adjusts the audio feedback speed.

Select Slow, Medium, or Fast.

Display “What Can I Say?” Tips

This feature gives voice command tips.

Select Off or On.

Display

Select and the following may display:

- Calibrate Touchscreen
- Turn Display Off

Calibrate Touchscreen

Select to calibrate the touchscreen, then follow the prompts.

Turn Display Off

Select to turn the display off. Touch anywhere on the infotainment display or press any infotainment control on the center stack to turn the display on.

Return to Factory Settings

Select and the following may display:

- Restore Vehicle Settings
- Clear All Private Data
- Restore Radio Settings

Restore Vehicle Settings

This allows vehicle settings to be restored.

Select Restore or Cancel.

Clear All Private Data

This allows all private information to be cleared from the vehicle.

Select Delete or Cancel.

Restore Radio Settings

This allows radio settings to be restored.

Select Restore or Cancel.

Software Information

Select to view or update the infotainment system current software information.

Wi-Fi

Select and the following may display:

- Wi-Fi
- Manage Wi-Fi Networks

Wi-Fi

This feature allows Wi-Fi networks to be turned off or on.

Select Off or On.

Manage Wi-Fi Networks

Select to manage Wi-Fi networks. Wi-Fi must be on for this feature to be accessed.

Power Take-Off (PTO) (If Equipped)

There may be additional features that can be customized for the PTO. See *Power Take-Off (PTO)* ⇨ *266*. See your dealer to enable these features.

Select and the following may display:

- Standby Speed
- Set 1 Speed
- Set 2 Speed
- Tap Step Speed
- Shutdown Time

PTO STANDBY SPEED

This feature allows for modifying the PTO Standby Speed.

PTO SET 1 SPEED

This feature is available if the vehicle is configured for Stationary Preset PTO, and allows the selection of the PTO set 1 speed.

PTO SET 2 SPEED

This feature is available if the vehicle is configured for Stationary Preset PTO, and allows the selection of the PTO set 2 speed.

PTO TAP STEP SPEED

This feature is available if the vehicle is configured for Stationary Variable or Mobile PTO, and allows the selection of the PTO tap step speed.

PTO SHUTDOWN TIME

This feature is available if the vehicle is configured for Stationary Preset or Stationary Variable PTO, and allows the selection of the PTO shutdown time.

Lighting

Exterior Lighting
Exterior Lamp Controls 130
Exterior Lamps Off Reminder 131
Headlamp High/Low-Beam Changer 131
Flash-to-Pass 131
Daytime Running Lamps (DRL) 132
Automatic Headlamp System 132
Hazard Warning Flashers 133
Turn and Lane-Change Signals 133
Fog Lamps 134
Auxiliary Roof-Mounted Lamp 134
Exterior Cargo Lamps 135

Interior Lighting
Instrument Panel Illumination Control 135
Dome Lamps 136
Reading Lamps 136

Lighting Features
Entry Lighting 137
Exit Lighting 137
Battery Load Management . . . 137
Battery Power Protection 138
Exterior Lighting Battery Saver 138

Exterior Lighting

Exterior Lamp Controls

The exterior lamp control is on the instrument panel to the left of the steering wheel.

⏻ **:** Turns off the automatic headlamps and Daytime Running Lamps (DRL). Turn the headlamp control to ⏻ again to turn the automatic headlamps or DRL back on.

For vehicles first sold in Canada, off will only work when the vehicle is in P (Park).

AUTO : Automatically turns on the headlamps, parking lamps, taillamps, instrument panel lights, roof marker lamps (if equipped), front/rear sidemarker lamps, and license plate lamps.

When the vehicle is turned off and the headlamps are in AUTO, the headlamps turn off. When the key is removed, they automatically turn on for a set time. The time of the delay can be changed using the DIC. See *Driver Information Center (DIC) (Base Level)* ⇨ *117* or *Driver Information Center (DIC) (Uplevel)* ⇨ *119*.

: Turns on the parking lamps including all lamps, except the headlamps.

: Turns on the headlamps together with the parking lamps and instrument panel lights.

When the headlamps are turned on while the vehicle is on, the headlamps turn off automatically 10 minutes after the ignition is turned off. When the headlamps are turned on while the vehicle is off, the headlamps will stay on for 10 minutes before turning off to prevent the battery from being drained. Turn the headlamp control off and then back to the headlamp on position to make the headlamps stay on for an additional 10 minutes. To keep the lamps on for more than 10 minutes, the ignition must be on or in ACC/ACCESSORY.

: If equipped, turns on the fog lamps. See *Fog Lamps* ⇨ *134*.

Exterior Lamps Off Reminder

A reminder chime sounds when the headlamps or parking lamps are manually turned on, the ignition is off, and a door is open. To disable the chime, turn the lamps off.

Headlamp High/ Low-Beam Changer

Push the turn signal lever toward the instrument panel to change the headlamps from low to high beam.

Pull the turn signal lever toward you and release it to return to low-beam headlamps.

When the high-beam headlamps are on, this indicator light on the instrument cluster will also be on.

Flash-to-Pass

This feature lets you use the high-beam headlamps to signal a driver in front of you that you want to pass. It works even if the headlamps are in the automatic position.

To use it, pull the turn signal lever toward you, then release it.

If the headlamps are in the automatic position or on low beam, the high-beam headlamps will turn on. Depending on the type of headlamp, they will either turn off

after a short duration or stay on as long as you hold the lever toward you. The high-beam indicator on the instrument cluster will come on. Release the lever to return to normal operation.

Daytime Running Lamps (DRL)

DRL can make it easier for others to see the front of the vehicle during the day. Fully functional DRL are required on all vehicles first sold in Canada.

The DRL system comes on when the following conditions are met:

- The ignition is on.
- The exterior lamp control is in AUTO.
- The transmission is not in P (Park).
- The light sensor determines it is daytime.

When the DRL system is on, only the DRL are on. The taillamps, sidemarker lamps, instrument panel lights, and other lamps will not be on.

When it begins to get dark, the automatic headlamp system switches from DRL to the headlamps.

To turn off the DRL, turn the exterior lamp control to ⏻ and then release. For vehicles first sold in Canada, off will only work when the vehicle is parked.

Automatic Headlamp System

When the exterior lamp control is set to AUTO and it is dark enough outside, the headlamps come on automatically.

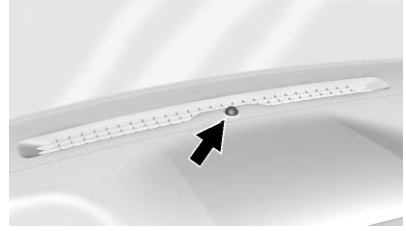

There is a light sensor on top of the instrument panel. Do not cover the sensor, otherwise the headlamps will come on when they are not needed.

The system may also turn on the headlamps when driving through a parking garage or tunnel.

If the vehicle is started in a dark garage, the automatic headlamp system comes on immediately. If it is light outside when the vehicle leaves the garage, there is a slight delay before the automatic headlamp system changes to the DRL. During that delay, the instrument cluster may not be as bright as usual. Make sure the instrument panel brightness control

is in the full bright position. See *Instrument Panel Illumination Control* ⇨ *135*.

When it is bright enough outside, the headlamps will turn off or may change to Daytime Running Lamps (DRL).

The automatic headlamp system turns off when the exterior lamp control is turned to ⏻ or the ignition is off.

Lights On with Wipers

If the windshield wipers are activated in daylight with the engine on, and the exterior lamp control is in AUTO, the headlamps, parking lamps, and other exterior lamps come on. The transition time for the lamps coming on varies based on wiper speed. When the wipers are not operating, these lamps turn off.

Move the exterior lamp control to ⏻ or ≋00≋ to disable this feature.

Hazard Warning Flashers

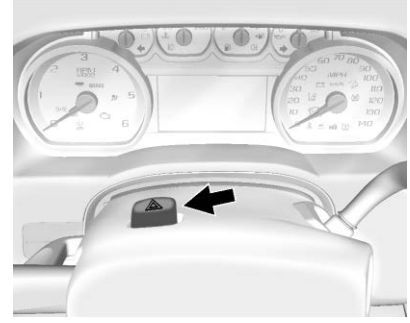

⚠ **:** Press this button to make the front and rear turn signal lamps flash on and off. Press again to turn the flashers off.

When the hazard warning flashers are on, the vehicle's turn signals will not work.

Turn and Lane-Change Signals

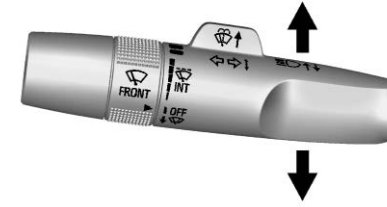

An arrow on the instrument cluster flashes in the direction of the turn or lane change.

Move the turn signal lever all the way up or down to signal a turn.

Raise or lower the lever for less than one second until the arrow starts to flash to signal a lane change. This causes the turn signals to automatically flash three times. It will flash six times if Tow/Haul Mode is active. Holding the turn signal lever for more than one second will cause the turn signals to flash until the lever is released.

The lever returns to its starting position whenever it is released.

If after signaling a turn or a lane change the arrows flash rapidly or do not come on, a signal bulb could be burned out. If equipped with LED turn signals, see your dealer.

Replace any burned out bulbs. If a bulb is not burned out, check the fuse. See *Fuses and Circuit Breakers* ⇨ *316*.

Turn Signal On Chime

If the turn signal is left on for more than 1.2 km (0.75 mi), a chime sounds at each flash of the turn signal. The message TURN SIGNAL ON will also appear in the Driver Information Center (DIC). To turn the chime and message off, move the turn signal lever to the off position.

Fog Lamps

If equipped, the control is on the center of the exterior lamp control, to the left of the steering column.

The ignition must be on for the fog lamps to come on.

: Press to turn the fog lamps on or off. A light will come on in the instrument cluster.

When the fog lamps are turned on, the parking lamps automatically turn on.

When the headlamps are changed to high beam, the fog lamps go off. When the high-beam headlamps are turned off, the fog lamps will come on again.

Some localities have laws that require the headlamps to be on with the fog lamps.

Auxiliary Roof-Mounted Lamp

If equipped, this button includes wiring provisions for a dealer or a qualified service center to install an auxiliary roof lamp.

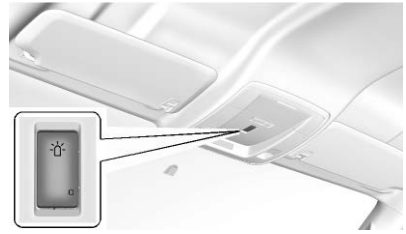

This button is on the overhead console.

When the wiring is connected to an auxiliary roof-mounted lamp, pressing the bottom of the button will activate the lamp and illuminate an indicator light at the bottom of

this button. Pressing the top of the button will turn off the roof-mounted lamp and indicator.

The emergency roof lamp circuit is fused at 30 amps, so the total current draw of the attached lamps should be less than this value. The attachment points for the roof lamp circuits are two blunt cut wires above the overhead console: a dark green with blue stripe switched power wire and a black ground wire.

For information on roof-mounted emergency lamp installation, see www.gmupfitter.com or contact your dealer.

If the vehicle has this button, the vehicle may have the snow plow prep package. See *Add-On Electrical Equipment* ⇨ *263*.

Exterior Cargo Lamps

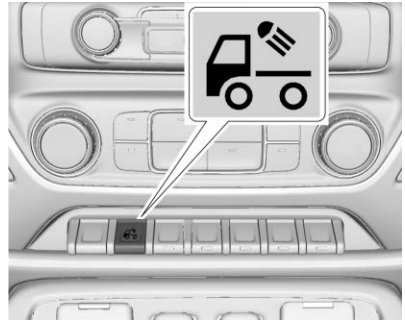

The cargo lamp provides more light in the cargo area or on the sides of the vehicle, if needed. The lights on the outside mirrors also turn on, if equipped.

Press the switch to turn the cargo lamp on or off. An indicator light will turn on when the lamp is turned on. The shift lever must be in P (Park) to operate the cargo lamp. The lights on the outside rearview mirrors turn on if the shift lever is in R (Reverse), N (Neutral), or P (Park).

Interior Lighting

Instrument Panel Illumination Control

This feature controls the brightness of the steering wheel and instrument panel lights. The instrument panel illumination control is next to the exterior lamp control.

: Move the thumbwheel up or down to brighten or dim the lights.

Dome Lamps

There are dome lamps in the overhead console and the headliner, if equipped.

To change the dome lamp settings, press the following:

OFF : Turns the lamps off, even when a door is open.

DOOR : The lamps come on automatically when a door is opened.

ON : Turns all dome lamps on.

Reading Lamps

There are reading lamps in the overhead console and the headliner, if equipped. To operate, the ignition must be on or in ACC/ ACCESSORY, or using Retained Accessory Power (RAP).

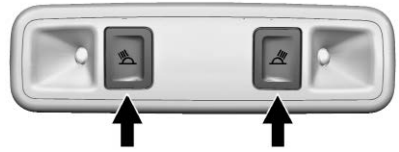

Press or next to each reading lamp to turn it on or off.

Lighting Features

Entry Lighting

Some exterior lamps and the interior lamps turn on briefly at night, or in areas with limited lighting, when 🔓 is pressed on the Remote Keyless Entry (RKE) transmitter. When a door is opened, the interior lamps come on if the dome lamp control is in the DOOR position. After about 30 seconds the exterior lamps turn off. Entry lighting can be disabled manually by changing the ignition out of the OFF position, or by pressing the RKE transmitter 🔒 button.

This feature can be changed. See “Vehicle Locator Lights” under *Vehicle Personalization* ⇨ *123*.

Exit Lighting

Some exterior lamps and the interior lamps come on at night, or in areas with limited lighting when the key is removed from the ignition. The exterior and interior lamps remain on for a set amount of time and then automatically turn off. The interior lamps do not come on if the dome lamp control is in the Off position.

The exterior lamps turn off immediately by turning the exterior lamps control off.

This feature can be changed. See *Vehicle Personalization* ⇨ *123*.

Battery Load Management

The vehicle has Electric Power Management (EPM), which estimates the battery's temperature and state of charge. It then adjusts the voltage for best performance and extended life of the battery.

When the battery's state of charge is low, the voltage is raised slightly to quickly bring the charge back up. When the state of charge is high, the voltage is lowered slightly to prevent overcharging. The voltmeter gauge or the voltage display on the Driver Information Center (DIC), if equipped, may show the voltage moving up or down. This is normal. If there is a problem, an alert will be displayed.

The battery can be discharged at idle if the electrical loads are very high. This is true for all vehicles. This is because the generator (alternator) may not be spinning fast enough at idle to produce all the power that is needed for very high electrical loads.

A high electrical load occurs when several of the following are on, such as: headlamps, high beams, fog lamps, rear window defogger, climate control fan at high speed, heated seats, engine cooling fans, trailer loads, and loads plugged into accessory power outlets.

EPM works to prevent excessive discharge of the battery. It does this by balancing the generator's output and the vehicle's electrical needs. It can increase engine idle speed to generate more power, whenever needed. It can temporarily reduce the power demands of some accessories.

Normally, these actions occur in steps or levels, without being noticeable. In rare cases at the highest levels of corrective action, this action may be noticeable to the driver. If so, a DIC message might be displayed and it is recommended that the driver reduce the electrical loads as much as possible.

Battery Power Protection

This feature shuts off the dome and reading lamps, if they are left on for more than 10 minutes after the ignition is turned off. The cargo lamp shuts off after 20 minutes. This prevents the battery from running down.

Exterior Lighting Battery Saver

The exterior lamps turn off about 10 minutes after the ignition is turned off, if the parking lamps or headlamps have been manually left on. This protects against draining the battery. To restart the 10-minute timer, turn the exterior lamp control to the ⏻ position and then back to the ≣00≢ or ≣D position.

To keep the lamps on for more than 10 minutes, the ignition must be on or in ACC/ACCESSORY.

Infotainment System

Introduction
Infotainment 139
Theft-Deterrent Feature 140
Overview (Base Radio) 140
Overview (Base Radio with Touchscreen) 144
Home Page (Base Radio) 145
Home Page (Base Radio with Touchscreen) 147
Software Updates 147

Radio
AM-FM Radio (Base Radio) 148
AM-FM Radio (Base Radio with Touchscreen) 150
Satellite Radio (Base Radio) 152
Satellite Radio (Base Radio with Touchscreen) 152
Radio Reception 154
Fixed Mast Antenna 154
Multi-Band Antenna 154

Audio Players
Avoiding Untrusted Media Devices 155
CD Player 155
USB Port 158
Auxiliary Jack 163
Bluetooth Audio 164

Voice Recognition
Voice Recognition 165

Phone
Bluetooth (Overview) 172
Bluetooth (Infotainment Controls) 173
Apple CarPlay and Android Auto 177

Trademarks and License Agreements
Trademarks and License Agreements 179

Introduction

Infotainment

Base radio information is included in this manual. See the infotainment manual for information on other available infotainment systems.

Read the following pages to become familiar with the features.

⚠ Warning

Taking your eyes off the road for too long or too often while using any infotainment feature can cause a crash. You or others could be injured or killed. Do not give extended attention to infotainment tasks while driving. Limit your glances at the vehicle displays and focus your attention on driving. Use voice commands whenever possible.

The infotainment system has built-in features intended to help avoid distraction by disabling some functions when driving. These functions may gray out when they are unavailable. Many infotainment features are also available through the instrument cluster and steering wheel controls.

Before driving:

- Become familiar with the operation, center stack controls, and infotainment display controls.
- Set up the audio by presetting favorite stations, setting the tone, and adjusting the speakers.
- Set up phone numbers in advance so they can be called easily by pressing a single control or by using a single voice command if equipped with Bluetooth phone capability.

See *Distracted Driving* ⇨ *191*.

To play the infotainment system with the ignition off, see *Retained Accessory Power (RAP)* ⇨ *211*.

Active Noise Cancellation (ANC)

If equipped, ANC reduces engine noise in the vehicle's interior. ANC requires the factory-installed audio system, radio, speakers, amplifier (if equipped), induction system, and exhaust system to work properly. Deactivation is required by your dealer if related aftermarket equipment is installed.

Theft-Deterrent Feature

TheftLock is designed to discourage theft of the vehicle's radio by learning a portion of the Vehicle Identification Number (VIN). The radio does not operate if it is stolen or moved to a different vehicle.

Overview (Base Radio)

Infotainment System Overview

The infotainment system is controlled by using the buttons on the center stack and steering wheel controls, if equipped. See *Steering Wheel Controls* ⇨ *95*.

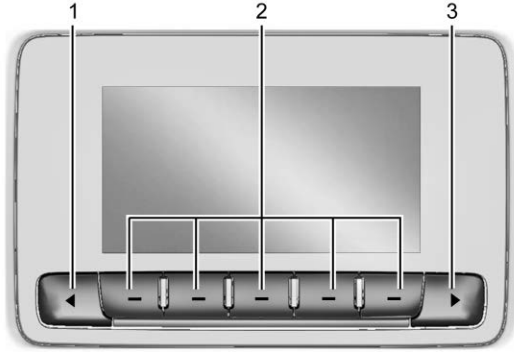

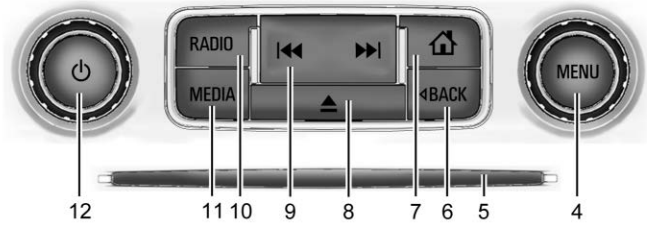

Radio with CD

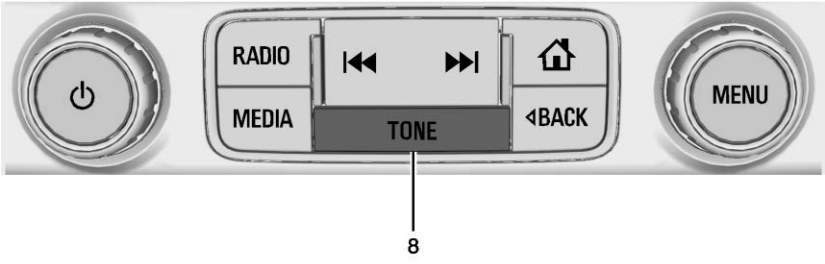

Radio with TONE

1. ◀
   - Press to scroll down through the favorite pages for each source.
2. Favorites/Soft Keys
   - Press to select favorite stations.
   - Press and hold to save favorite stations.
   - Press to select a screen button when displayed.
3. ▶
   - Press to scroll up through the favorite pages for each source.
4. MENU
   - Press to access the menu for the current audio source.
   - Press to select the highlighted menu option.
   - Turn to scroll through a list.
   - Turn to manually select a station.
5. CD Slot (If Equipped)
6. ◁ BACK
   - Press to return to the previous screen in a menu.
7. ⌂
   - Press to go to the Home Page from any point in the system.
     See *Home Page (Base Radio with Touchscreen)* ⇨ *147* or *Home Page (Base Radio)* ⇨ *145*.
8. ⏏ (If Equipped) or TONE (If Equipped)
   - Press ⏏ to eject the CD (if equipped).
   - Press TONE to open the Tone Settings menu (if equipped).
9. ⏮ or ⏭
   - **CD (If Equipped):** Press ⏮ to seek the beginning of the current or previous track. If the track has played for less than

five seconds, it seeks the previous track. If longer than five seconds, the current track will start from the beginning. Press ⏭ to seek the next track.

- **AM, FM, or SiriusXM (If Equipped):** Press ⏮ or ⏭ to seek to the previous or next strong station.
- **CD (If Equipped):** Press and hold ⏮ to quickly reverse through a track. Release the button to return to playing speed. Press and hold ⏭ to fast forward through a track. Release the button to return to playing speed.

10. RADIO
    - Press to change the audio source between AM, FM, or SiriusXM, if equipped.
11. MEDIA
    - Press to change the audio source between CD, USB, AUX, and Bluetooth Audio, if equipped.
12. ⏻
    - Press to turn the audio on.
    - Press and hold to turn it off.
    - When on, press to mute the system. Press again to unmute.
    - Turn to increase or decrease the volume.

Overview (Base Radio with Touchscreen)

1. ⌂
   - Press to go to the Home Page.
     See *Home Page (Base Radio with Touchscreen)* ⇨ *147* or *Home Page (Base Radio)* ⇨ *145*.
2. ⏮
   - Radio: Press and release to go to the previous station or channel. Press and hold to fast seek the next strongest previous station or channel.
   - USB/Bluetooth Music/ Pictures: Press and hold to go to the previous content. Press and hold to fast rewind.
3. ⏻
   - Press to turn the power on.
   - Press and hold to turn the power off.
   - Press to mute the system when on.

- Turn to decrease or increase the volume.

4. ⏭
   - Radio: Press and release to go to the next station or channel. Press and hold to fast seek the next strongest station or channel.
   - USB/Bluetooth Music/ Pictures: Press and hold to go to the next content. Press and hold to fast forward.
5. 📞
   - Press and release to access the phone screen, answer an incoming call, or access the device home screen. Press and hold to access Press to Talk.

Home Page (Base Radio)

Home Page Features

The infotainment system displays a Home Page that makes it easy to access all of the applications. Turn the MENU knob to highlight feature icons. Press the MENU knob to access the feature's options.

Various functions are disabled when the vehicle is moving.

AUDIO : Select AUDIO to display the active source page. The sources available are AM, FM, SiriusXM (if equipped), USB/iPod, AUX Input, and Bluetooth Audio (if equipped). See *AM-FM Radio (Base Radio with Touchscreen)* ⇨ *150* or *AM-FM Radio (Base Radio)* ⇨ *148*, *Satellite Radio (Base Radio with Touchscreen)* ⇨ *152* or *Satellite Radio (Base Radio)* ⇨ *152*, *Auxiliary Jack* ⇨ *163*, and *Bluetooth Audio* ⇨ *164*.

PHONE : Select PHONE to display the Phone main page. See *Bluetooth (Overview)* ⇨ *172* or *Bluetooth (Infotainment Controls)* ⇨ *173*.

NAV (Navigation, If Equipped) : Select NAV to display the OnStar Turn-by-Turn Navigation. See *OnStar Overview* ⇨ *421*, if equipped.

SETTINGS : Select SETTINGS to display the Settings main page. See "Setting Radio Preferences" following.

Setting Radio Preferences

Select the SETTINGS screen icon to display the Settings menu and the following may display:

Time and Date : See *Clock* ⇨ *97*.

Language (Current Language) : This will set the display language in the radio and instrument cluster. Select to display a list of languages. Select ◁ BACK to go back to the previous menu.

Valet Mode:

Using the circular numeric keypad, enter a four-digit code:

1. Turn the MENU knob to highlight a number.
2. Press the MENU knob to select it. Do this for each one of the four digits. Select Enter to go to the confirmation screen.

3. Re-enter the four-digit code. Select LOCK to lock the system.
4. Enter the four-digit code to unlock the system. Select ◁ BACK to go back to the previous menu.

Radio : See “Radio Setup” later in this section.

Vehicle : See *Vehicle Personalization* ⇨ *123*.

Display : Press the MENU knob to turn the display on or off.

Return to Factory Settings : See “Return to Factory Settings” later in this section.

Software Information (If Equipped) : Press the MENU knob to select Save Vehicle Info to USB. Press the MENU knob again to start downloading the vehicle information to the USB.

Radio Setup

Press the RADIO button and the following may display:

Manage Favorites:

- Turn the MENU knob and press to select a favorite.
  - To delete a favorite, press the button just below the DELETE screen button.
  - To move a favorite, select MOVE. Turn the MENU knob to select a new location, then select DROP to select the new location.
- Select ◁ BACK to go back to the previous menu.

Number of Favorites Shown : Select Auto and the system will automatically adjust the number of favorite pages when favorites are added and removed, or select a number from 5–25 to manually adjust the number of favorites shown.

Audible Touch Feedback (If Equipped) : Select Audible Touch Feedback to turn feedback off or on.

Auto Volume (If Equipped) : This feature adjusts the volume based on vehicle speed. The options are Off, Low, Medium-Low, Medium, Medium-High, or High. Select the desired volume.

Maximum Startup Volume : This feature sets the maximum startup volume. If the vehicle is started and the volume is greater than this level, the volume is adjusted to this level. To set the maximum startup volume, Turn the MENU knob to increase or decrease startup volume.

Return to Factory Settings

Select Return to Factory Settings and the following may display:

Restore Vehicle Settings : This option will restore factory vehicle personalization settings. Select Restore Vehicle Settings. A screen displays stating all vehicle customization settings will be restored to the factory settings. Select Cancel or Confirm.

Clear All Private Data (If Equipped) : This option clears all private information from the vehicle. Select Clear All Private Data. Select Cancel or Confirm.

Restore Radio Settings : This option will restore factory radio settings. Select Restore Radio Settings. A screen displays stating all personalized radio settings will be restored back to the factory settings. Select Cancel or Confirm.

English and Metric Unit Conversion

To change the display units between English and metric units, see *Driver Information Center (DIC) (Base Level)* ⇨ *117* or *Driver Information Center (DIC) (Uplevel)* ⇨ *119* or *Instrument Cluster* ⇨ *104*.

Home Page (Base Radio with Touchscreen)

Touchscreen Buttons

Touchscreen buttons show on the screen when available. When a function is unavailable, the button may gray out. When a function is selected, the button may highlight.

Home Page Features

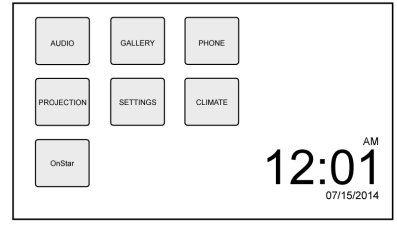

Press ⌂ to go to the Home Page.

Audio : Touch to select AM, FM, SiriusXM (if equipped), USB/iPod/ Bluetooth Audio, or AUX.

Gallery : Touch to view a picture or movie.

Phone : Touch to activate the phone features (if equipped). See *Bluetooth (Overview)* ⇨ *172* or *Bluetooth (Infotainment Controls)* ⇨ *173*.

Projection : Touch to access USB supported devices when connected. See *USB Port* ⇨ *158*.

Settings : Touch to access the Personalization menu. See *Vehicle Personalization* ⇨ *123*.

Climate : Touch to access the Climate menu. See *Climate Control Systems (with Heater Only)* ⇨ *184* or *Climate Control Systems (with Air Conditioning)* ⇨ *186*.

OnStar : If equipped, touch to access the OnStar menu. See *OnStar Overview* ⇨ *421*.

Software Updates

Over-the-Air Software Updates

If equipped, the infotainment system can download and install select software updates over a wireless connection. The system will prompt for certain updates to be downloaded and installed. There is also an option to check for updates manually.

To manually check for updates, touch SETTINGS on the Home Page, followed by Software Information, and then System

Update. Follow the on-screen prompts. The steps to check for, download and install updates may vary by vehicle.

Downloading Over-the-Air vehicle software updates requires Internet connectivity, which can be accessed through the vehicle's built-in OnStar 4G LTE connection, if equipped and active. If required, data plans are provided by a third party. Optionally, a secure Wi-Fi hotspot such as a compatible mobile device hotspot, home hotspot, or public hotspot can be used. Applicable data rates may apply.

To connect the infotainment system to a secured mobile device hotspot, home hotspot, or public hotspot, touch SETTINGS on the Home Page, followed by Wi-Fi, and then Manage Wi-Fi Networks. Select the appropriate Wi-Fi network, and follow the on-screen prompts. Download speeds may vary.

On most compatible mobile devices, activation of the Wi-Fi hotspot is in the Settings menu under Mobile Network Sharing, Personal Hotspot, Mobile Hotspot, or similar.

Availability of Over-the-Air vehicle software updates varies by vehicle and country. For more information on this feature, see www.my.chevrolet.com/learn.

Radio

AM-FM Radio (Base Radio)

Playing the Radio

While on the audio main page, press the RADIO button repeatedly to cycle through the available sources AM, FM, and SiriusXM (if equipped) or press the MEDIA button repeatedly to cycle through the available sources Bluetooth Audio (if equipped), USB, and AUX.

The steering wheel controls can also be used to adjust the volume. See *Steering Wheel Controls* ⇨ *95*.

AM, FM, or SiriusXM (If Equipped)

To select AM, FM, or SiriusXM (if equipped), press the RADIO button to toggle to the desired broadcast source.

Press the MENU knob and the following radio settings may display:

Tone Settings:

- **Bass, Midrange, and Treble:** Turn the MENU knob and highlight. Press the MENU knob to select. Turn the MENU knob to adjust.
- **Balance:** Turn the MENU knob to highlight. Press the MENU knob to select. Turn the MENU knob left for more sound from the left speakers or right for more sound from the right speakers. The middle position balances the sound between the left and right speakers.
- **Fade:** Turn the MENU knob to highlight. Press the MENU knob to select. Turn the MENU knob to the left for more sound from the front speakers and to the right for more sound from the rear speakers. The middle position balances the sound between the front and rear speakers.
- **DSP**: If equipped with a Bose Surround sound system, it will have three DSP modes:
  - Normal: Adjusts the audio to provide the best sound for all seating positions.
  - Driver: Adjusts the audio to provide the best sound for the driver.
  - Centerpoint: Creates a surround sound from nearly any audio source.
- **EQ (Equalizer)**: If equipped with a Bose sound system, turn the MENU knob to highlight. Turn the MENU knob to scroll through the options. Press the MENU knob to select. Press ◁ BACK to go to the previous menu.

Station List : Select to display a list of AM or FM stations. Press ◁ BACK to go to the previous menu.

Auto Volume : If equipped, this feature adjusts the volume based on the vehicle speed. Select the level between Off, Low, Medium-Low, Medium, Medium-High, and High. Press ◁ BACK to go to the previous menu.

EQ (Equalizer) Settings : In certain configurations, the available choices are Manual and Talk.

Options for SiriusXM Only (If Equipped)

SXM View : SXM view allows the channel list to be viewed by channel name, artist playing on channel, or song playing on channel. Turn the MENU knob to highlight and press the MENU knob to select. Press ◁ BACK to go to the previous menu.

Channel List : Select to display a list of SiriusXM channels. Turn the MENU knob to highlight and press the MENU knob to select. Press ◁ BACK to go to the previous menu.

Also see the radio settings common for all sources earlier in this section.

Finding a Station

Seeking a Station

Press ⏮ or ⏭ to search for the previous or next strongest station.

Tuning a Station

Turn the MENU knob to manually find a station.

Storing Radio Station Presets

Up to 25 preset stations from all bands can be stored in the favorite lists in any order. Up to five stations can be stored in each favorite page and the number of favorites can be set.

AM, FM, or SiriusXM (If Equipped) : While on the active source main page, such as AM, FM, or SiriusXM (if equipped), press and hold a favorites/soft key button on the center stack.

Mixed-Audio Favorites

Media (if equipped) and Broadcast favorites can be stored.

To display the favorites page, press ◀ or ▶ on the center stack.

To manage favorites, see “Manage Favorites” under *Home Page (Base Radio with Touchscreen)* ⇨ *147* or *Home Page (Base Radio)* ⇨ *145*.

AM-FM Radio (Base Radio with Touchscreen)

Playing the Radio

Audio Source Menu

⌂ **:** Press to go to the Home Page.

⏻ **:** Press to turn on, mute, or unmute the system. Press and hold to turn off the system.

Selecting a Band

Press ⌂, then touch AUDIO, Source, then select AM, FM, or SXM, if equipped. The last station that was playing starts playing again.

System Settings

Auto Volume

This feature automatically adjusts the radio volume to compensate for road and wind noise.

The level of volume compensation can be selected, or the feature can be turned off.

1. Touch MENU from a source screen.
2. Select Auto Volume.
3. Select the desired setting.
4. Touch ↩ to go back to the source screen.

Tone Settings

The tone settings can be set for each radio band and each audio player source.

Preset Tone Settings

- Touch MENU.
- Touch Tone Settings.
- Select a preset tone setting.
- Bass, Midrange, or Treble: Touch − or +.
- Fader or Balance: Adjust the front/rear or left/right speakers by dragging the dot in the vehicle image on the screen.

Custom Tone Settings

- Touch MENU.
- Touch Tone Settings.

- Touch Custom.
- Bass, Midrange, or Treble: Touch − or +.
- Fader or Balance: Adjust the front/rear or left/right speakers by dragging the dot in the vehicle image on the screen.

Touch ⮌ to go back to the source screen.

Selecting an Auxiliary Device

Connect the auxiliary device to the AUX input terminal. Play will begin when the system has finished reading the information on the device.

If the AUX device is already connected, press ⌂, AUDIO, Source, then select the device.

Selecting a Station

Seek Tuning

If the radio station is not known:

Press ⏮ or ⏭ to automatically search for available radio stations.

Manual Tuning

Continue touching |◀ or ▶| to manually change the radio station.

Direct Tune

From the AM or FM menu:

- Touch Tune.
- Enter the station number.
- Touch Go or |◀ or ▶| to go to the previous or next station.

Favorite

- Touch < or > to scroll through the favorites.
- Touch on the station to select it.

Station List

- From the AM or FM menu, touch MENU.
- Select Station List.
- Touch ▲ or ▼ to scroll through the list. Touch the station to select it.

Update Station List

- From the AM or FM menu, touch MENU, then touch Update Station List. The broadcasting list updating will begin.
- During the AM or FM broadcasting list update, touch Cancel to stop the updates.

Storing a Station as a Favorite

Stations from all bands can be stored in any order in the favorite pages.

Up to 25 stations can be stored.

Storing Stations

To store the station to a position in the list, touch the corresponding button 1−5 until a beep is heard.

1. Select the desired station.
2. Touch < or > to select the desired page of saved favorites.

3. Touch and hold down any of the preset buttons to save the current radio station to that button of the selected favorites page.

To change a preset button, tune to the new desired radio station and touch and hold the preset button.

Satellite Radio (Base Radio)

SiriusXM Satellite Radio Service (If Equipped)

Vehicles with a SiriusXM satellite radio tuner and a valid SiriusXM satellite radio subscription can receive SiriusXM programming.

SiriusXM is a satellite radio service based in the 48 contiguous United States and 10 Canadian provinces. SiriusXM satellite radio has a wide variety of programming and commercial-free music, coast to coast, and in digital-quality sound. A service fee is required to receive the SiriusXM service. See www.siriusxm.com or call 1-888-601-6296 (U.S.); or see www.siriusxm.ca or call 1-877-438-9677 (Canada).

When SiriusXM is active, the channel name and number, category name, song title, and artist display on the screen.

Browsing SiriusXM Channels

To browse the SiriusXM channels:

1. Press the MENU knob.
2. Turn the MENU knob to highlight SXM Channel List.
3. Turn the MENU knob to highlight the desired SXM Channels.

Satellite Radio (Base Radio with Touchscreen)

Vehicles with an SXM Satellite Radio tuner and a valid SiriusXM Satellite Radio subscription can receive SiriusXM programming.

SiriusXM Satellite Radio Service (If Equipped)

SiriusXM is a satellite radio service based in the 48 contiguous United States and 10 Canadian provinces. SiriusXM Satellite Radio has a wide variety of programming and commercial-free music, coast to coast, and in digital-quality sound. A service fee is required to receive the SiriusXM service. For more information, contact SiriusXM at www.siriusxm.com or 1-888-601-6296 (U.S.), and www.siriusxm.ca or 1-877-438-9677 (Canada).

Listening to SiriusXM Radio (If Equipped)

1. Press ⌂.
2. Touch AUDIO.
3. Touch Source.
4. Touch SXM and the most recent listened to SiriusXM channel will display.

Selecting a Category

From Menu, touch Categories, then touch the desired category or from Categories, touch ▲ or ▼ to find the desired channel. Touch the channel to select it.

Selecting a Channel

Touch ▶| or |◀ and the previous or next channel will be selected.

Touch and hold ▶| or |◀ to jump four channels backward or forward, then release the button at the desired channel.

Using the Preset Buttons

Up to seven favorites pages can be saved, and each page can store up to five channels.

To change a preset button, tune to the new desired channel and hold the button.

Listening to Preset Channels

1. Continue touching < or > to select the desired favorites page.
2. Touch the preset button to listen to the channel saved to that button.

Using the SiriusXM Menu

Operation

1. Touch MENU on the SXM radio screen.
2. Touch the menu to select the desired item or to display the detail menu item.
3. Touch ↩ to return to the previous menu.

Channel List

1. Touch Channel List from the SXM menu. The channel list is displayed.
2. Touch ▲ or ▼ to find the desired channel. Tune to the channel by selecting it.

Tone Settings

From the tone settings menu, the sound features can be set up for SiriusXM audio and each audio player's functions.

1. Touch Tone Settings. The tone settings screen is displayed. See "Tone Settings" in *AM-FM Radio (Base Radio with Touchscreen)* ⇨ *150* or *AM-FM Radio (Base Radio)* ⇨ *148*.
2. Touch OK.

Auto Volume

1. Touch Auto Volume. See "Auto Volume" in *AM-FM Radio (Base Radio with Touchscreen)* ⇨ *150* or *AM-FM Radio (Base Radio)* ⇨ *148*.
2. Touch OK.

Categories

1. Touch Categories.
2. Touch ▲ or ▼ to find the desired category. Touch the category to select it.

Explicit Content Filter

When on, only a filtered list of channels will be received. When off, all regular SXM programming subscribed to will be received.

1. Touch SXM Explicit Filter.

2. Select On or Off.

Radio Reception

Frequency interference and static can occur during normal radio reception if items such as phone chargers, vehicle convenience accessories, and external electronic devices are plugged into the accessory power outlet. If there is interference or static, unplug the item from the accessory power outlet.

FM

FM signals only reach about 16 to 65 km (10 to 40 mi). Although the radio has a built-in electronic circuit that automatically works to reduce interference, some static can occur, especially around tall buildings or hills, causing the sound to fade in and out.

AM

The range for most AM stations is greater than for FM, especially at night. The longer range can cause station frequencies to interfere with each other. Static can also occur when things like storms and power lines interfere with radio reception. When this happens, try reducing the treble on the radio.

SiriusXM Satellite Radio Service

If equipped, SiriusXM Satellite Radio Service provides digital radio reception. Tall buildings or hills can interfere with satellite radio signals, causing the sound to fade in and out. In addition, traveling or standing under heavy foliage, bridges, garages, or tunnels may cause loss of the SiriusXM signal for a period of time.

Cell Phone Usage

Cell phone usage, such as making or receiving phone calls, charging, or just having the phone on may cause static interference in the radio. Unplug the phone or turn it off if this happens.

Fixed Mast Antenna

The fixed mast antenna will go through most car washes as long as it is securely attached. If the antenna becomes slightly bent, straighten it out by hand. If it is badly bent, replace it.

Occasionally check that the antenna is tight at the base. If tightening is required, protect the paint from damage.

Multi-Band Antenna

The multi-band antenna is on the roof of the vehicle. The antenna is used for OnStar, the SiriusXM Satellite Radio Service System, and GPS (Global Positioning System), if the vehicle has these features. Keep the antenna clear of obstructions for clear reception.

If the vehicle has a sunroof, and it is open, reception can also be affected.

Items on the roof of the vehicle can interfere with the performance of the radio system and OnStar (if equipped). Make sure the multi-band antenna is not obstructed.

Audio Players

Avoiding Untrusted Media Devices

When using media devices such as CDs, DVDs, Blu-ray Discs, SD cards, USB devices, and mobile devices, consider the source. Untrusted media devices could contain files that affect system operation or performance. Avoid use if the content or origin cannot be trusted.

CD Player

If the vehicle is equipped with a CD player, it can be used for CD and MP3 audio.

With the vehicle on, insert a disc into the slot, label side up. Press the MEDIA button to select CD as a source.

The system is capable of playing most:

- Audio CDs
- CD-R
- CD-RW
- MP3 or unprotected WMA formats

When playing any compatible recordable disc, the sound quality can be reduced due to disc quality, the method of recording, the quality of the music that has been recorded, or the way the disc has been handled.

There can be increased skipping, difficulty in finding tracks, and/or difficulty in loading and ejecting. If these problems occur, check the disc for damage or try a known good disc.

To avoid damage to the CD player:

- Do not use scratched or damaged discs.
- Do not apply labels to discs. The labels could get caught in the player.
- Insert only one disc at a time.
- Keep the loading slot free of foreign materials, liquids, and debris.

- Use a marking pen to label the top of the disc.

Loading and Ejecting Discs

To load a disc:

1. Turn the vehicle on.
2. Insert a disc into the slot, label side up. The player pulls it in the rest of the way. If the disc is damaged or improperly loaded, there is an error and the disc ejects.

Playing an Audio CD

Press MEDIA until CD is selected.

On the CD main page, either a track number displays at the beginning of each track, or Song, Artist, and Album information displays when available.

Use the following screen controls to play the disc:

|◀: While on the CD main page:

- Touch to seek to the beginning of the current or previous track. If the track has been playing for less than five seconds, it seeks to the previous track. If longer than five seconds, the current track starts from the beginning.
- Touch and hold to fast reverse through a track. Release the button to return to playing speed. Elapsed time displays.

▶|: While on the CD main page:

- Touch to seek to the next track.
- Touch and hold to fast forward through a track. Release the button to return to playing speed. Elapsed time displays.

II/▶: While on the CD main page, touch to pause. Touch again to resume.

⤮: Touch ⤮ to play the songs in random order. Touch again to turn off.

If a Blu-ray Disc or DVD disc is loaded into the disc player and the CD screen button is selected, a message comes on the screen to use the Video application. The Video application is only available on vehicles with Rear Seat Entertainment (RSE).

CD Menu

While on the CD main page, press the MENU knob to display the CD menu and the following may display:

Browse : Select to display the files or songs on the CD.

Tone Settings : Select to adjust Bass, Midrange, Treble, Balance, Fade, and EQ (Equalizer). See “Tone Settings” under *AM-FM Radio (Base Radio with Touchscreen)* ⇨ *150* or *AM-FM Radio (Base Radio)* ⇨ *148*.

Auto Volume : If equipped, this feature adjusts the volume based on the vehicle speed. Select the level between Off, Low, Medium-Low, Medium, Medium-High, and High. Press BACK to go to the previous menu.

DSP : If equipped, this feature adjusts the pre-defined settings. See “DSP” in *AM-FM Radio (Base Radio with Touchscreen)* ⇨ *150* or *AM-FM Radio (Base Radio)* ⇨ *148*.

EQ (Equalizer) : If equipped, this feature adjusts the equalizer settings. See “EQ (Equalizer)” in *AM-FM Radio (Base Radio with Touchscreen)* ⇨ *150* or *AM-FM Radio (Base Radio)* ⇨ *148*.

Error Messages

If Disc Error displays and/or the disc comes out, it could be for one of the following reasons:

- The disc has an invalid or unknown format.
- The disc is very hot. Try the disc again when the temperature returns to normal.
- The road is very rough. Try the disc again when the road is smoother.
- The disc is dirty, scratched, wet, or upside down.
- The air is very humid. Try the disc again later.
- There was a problem while burning the disc.
- The label is caught in the CD player.

If Disc Player Error displays, it could be for one of the following reasons:

- The player temperature is too high.
- There are load or eject errors.

If the CD is not playing correctly for any other reason, try a known good CD.

If any error continues, contact your dealer.

Playing an MP3 CD

To play an MP3 CD, follow the same instructions as “Playing an Audio CD.”

The following guidelines must be met when creating an MP3 disc, otherwise the CD might not play:

- Sampling rate: 16 kHz, 22.05 kHz, 24 kHz, 32 kHz, 44.1 kHz, and 48 kHz
- Bit rates supported: 8, 16, 24, 32, 40, 48, 56, 64, 80, 96, 112, 128, 144, 160, 192, 224, 256, and 320 kbps
- Maximum number of folders: eight folders with 255 files per folder
- Maximum of 1,000 files on a disc
- Recorded on a CD-R or CD-RW

Root Directory

The root directory is treated as a folder. All files contained directly under the root directory are accessed prior to any root directory folders.

Empty Folders

If a root directory or folder is empty or contains only folders, the player advances to the next folder in the file structure that contains a compressed audio file. The empty folder(s) are not displayed or numbered.

No Folder

When the CD only contains compressed audio files without any folders, all files are under the root folder.

USB Port

Using the USB Port

The infotainment system can play music by connecting an auxiliary device to the USB port.

USB Support

If equipped, there may be USB ports in the center stack and in the center console storage.

USB Supported Devices

- USB Flash Drives
- Portable USB Hard Drives

Not all iPods and USB drives are compatible with the USB port.

Make sure the iPod has the latest firmware from Apple for proper operation. iPod firmware can be updated using the latest iTunes application. See www.apple.com/itunes.

For help with identifying your iPod, see www.apple.com/support.

The USB port can play both lower and upper case .mp3, .wma, .ogg, and .wav files stored on a USB storage device.

Supported Apple Devices

To view supported devices in the U.S., see www.my.chevrolet.com/learn.

To view supported devices in Canada, see www.chevroletowner.ca.

USB Supported File and Folder Structure

The infotainment system supports:

- FAT16
- FAT32
- exFAT

Connecting a USB Storage Device or iPod/iPhone

To connect a USB storage device, connect the device to the USB port.

To connect an iPod/iPhone, connect one end of the device's cable to the iPod/iPhone and the other end to the USB port.

The iPod/iPhone charges while it is connected to the vehicle if the vehicle is on or in ACC/ACCESSORY. See *Ignition Positions* ⇨ *206*. When the vehicle is turned off, the iPod/iPhone automatically powers off and will not charge or draw power from the vehicle's battery.

For more information on USB usage, see "Audio System Information" following.

Audio System Information

The infotainment system can play the music files contained in the USB storage device or iPod/iPhone products.

Using MP3/WMA/OGG/WAV Files

- Music files with .mp3, .wma, .ogg, and .wav file name extensions can be played.
- MP3 files that can be played: Bit rate: 8 kbps to 320 kbps. Sampling frequency: 48 kHz, 44.1 kHz, 32 kHz, 24 kHz, 22.05 kHz, and 16 kHz.

- Files with a bit rate above 128 kbps will result in higher quality sound.
- ID3 Tag information for MP3 files, such as the album name and the artist, can be played.
- To display album title, track title, and artist information, the file should be compatible with the ID3 Tag V1 and V2 formats.

Using USB Storage Devices and an iPod/iPhone

- Use a USB or flash memory type storage device. Do not connect using a USB adaptor.
- Do not connect and reconnect the USB device repeatedly in a short time, as this may cause static electricity and problems using the device.
- Use a USB device with a metal connecting terminal.
- Connection with i-Stick Type USB storage devices may be faulty due to vehicle vibration.
- Do not touch the USB connecting terminal.
- Only USB storage devices formatted in FAT16/32 or exFAT file systems are recognized. NTFS and other file systems are not recognized.
- The time it takes to process files will depend on the USB storage device type and capacity, and the type of files stored.
- Some USB storage device files may not be compatible.
- Up to two USB devices and one iPod can be played through a USB hub. All devices may not be supported, depending on the performance of the USB hub. If there is not enough power supply, it may not operate normally.
- Do not disconnect the USB storage device while it is playing. This may cause damage to the product or affect the performance of the USB device.
- Disconnect the USB storage device when the ignition is turned off. If the ignition is turned on while the USB device is connected, the USB device may be damaged or may not operate normally.
- USB storage devices can only be connected for playing music, viewing photo files, or upgrading.
- Do not use the USB terminal to charge USB accessory equipment. The heat generated may cause performance issues or damage.
- Music files to which Digital Right Management (DRM) is applied cannot be played.
- USB storage device that are in capacity with a limit of 5,000 files, such as music, photo, video, 15 stages of folder structure can be used. Normal usage cannot be guaranteed for a storage device that exceeds this limit. The iPod/iPhone can play all music files that are supported. The music file lists will only display up to 5,000 files on the screen. These files are sorted in alphabetical order.

- Some iPod/iPhone product models may not support the connectivity or functionality of this product.
- Only connect the iPod/iPhone with connection cables supported by iPod/iPhone products. Other connection cables cannot be used.
- The iPod/iPhone may be damaged if it is connected to the vehicle with the ignition on. When not in use, disconnect the iPod/iPhone.
- When the iPod/iPhone is connected to the USB port by using the iPod/iPhone cable, the Bluetooth music is not supported.
- The iPod/iPhone playback functions and the information displayed may be different when played on the infotainment system.

	Step 1	Step 2
Playlists	Playlists	Songs
Artists	Albums/ All Songs	Songs
Albums	Albums	Songs
Songs	Songs	
Genres	Albums/ All Songs	Songs
Composer	Albums/ All Songs	Songs
Audiobooks	Songs	

- Refer to the table for the classification items related to the search function provided by the iPod/iPhone.

USB Player

Playing Music from a USB Device

- Connect the USB device to the USB port.
- Play will start automatically after the system has finished reading the USB device.
- If a non-readable USB device is connected, an error message displays and the system will switch to the previous audio function.

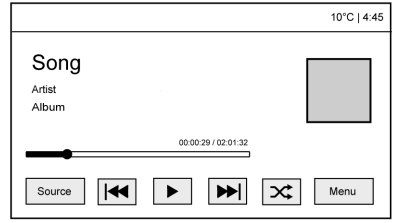

If the USB device is already connected:

1. Press ⌂.
2. Touch AUDIO.
3. Touch Source.
4. Touch USB.

To stop the USB device and select another media source, touch Source, then select the other source.

To remove the USB device, select another function, then remove the USB device.

Pause

- Touch ❚❚ to pause.
- Touch ▶ to resume.

Changing to Next/Previous Files

- Touch ⏭ to change to the next file.
- Touch ⏮ within five seconds of the playback time to play the previous file.

Returning to the Beginning of the Current File

Touch ⏮ after five seconds of the playback time.

Scanning Forward or Backward

Touch and hold ⏮ or ⏭ during playback to rewind or fast forward. Release the button to resume playback at normal speed.

Playing a File Randomly

Touch ⤮ during playback.

- ON: Plays all files randomly.
- OFF: Returns to normal playback.

Using the USB Music Menu

1. Touch Menu during playback.

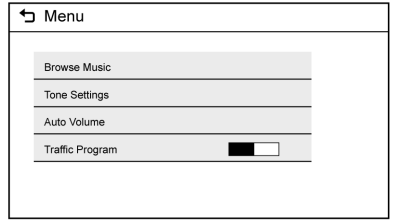

2. Touch the desired menu.

Browse Music

1. Touch Browse Music.
2. Touch the desired music.

Tone Settings

- Touch Tone Settings. The Tone Settings menu is displayed. See “Tone Settings” in *AM-FM Radio (Base Radio with Touchscreen)* ⇨ *150* or *AM-FM Radio (Base Radio)* ⇨ *148*.

Auto Volume

- Touch Auto Volume. The Auto Volume menu is displayed. See “Auto Volume” in *AM-FM Radio (Base Radio with Touchscreen)* ⇨ *150* or *AM-FM Radio (Base Radio)* ⇨ *148*.

Traffic Program (If Equipped)

- Touch On or Off.

MTP (Media Transfer Protocol)

- Connect an MTP supported device.
- Play will start automatically after the system has finished reading the MTP device.
- If a non-readable MTP device is connected, an error message displays and the system will switch to the previous audio function.

iPod/iPhone Player

This feature is limited to models supporting the iPod/iPhone connection.

Playing Music Files

- Connect the iPod/iPhone to the USB port.
- Play will start from the previously played point after the system has finished reading the USB device.

- If a non-readable USB device is connected, an error message displays and the system will switch to the previous audio function.

If the iPod/iPhone is already connected:

1. Press ⌂.
2. Touch AUDIO.
3. Touch Source.
4. Touch iPod.

To stop the device and select another media source, touch Source, then select the other source.

To remove the device, select another function, then remove the device.

Pause

- Touch ❚❚ to pause.
- Touch ▶ to resume.

Changing to Next/Previous Song

- Touch ⏭ to change to the next song.
- Touch ⏮ within two seconds of the playback time to play the previous song.

Returning to the Beginning of the Current File

Touch ⏮ after two seconds of the playback time.

Scanning Forward or Backward

Touch and hold ⏮ or ⏭ during playback to rewind or fast forward. Release the button to resume playback at normal speed.

Playing a File Randomly

Touch ⤮ during playback.

- ON: Plays all files randomly.
- OFF: Returns to normal playback.

Using the iPod Menu

- Touch Menu during playback.
- Touch the appropriate play mode.

Browse Music

1. Touch Browse Music.
2. Touch the desired music.

Tone Settings

- Touch Tone Settings. The Tone Settings menu is displayed. See “Tone Settings” under *AM-FM Radio (Base Radio with Touchscreen)* ⇨ *150* or *AM-FM Radio (Base Radio)* ⇨ *148*.

Auto Volume

- Touch Auto Volume. The Auto Volume menu is displayed. See “Auto Volume” under *AM-FM Radio (Base Radio with Touchscreen)* ⇨ *150* or *AM-FM Radio (Base Radio)* ⇨ *148*.

Picture System Information

The infotainment system can view picture files stored on a USB storage device and devices that support Media Transfer Protocol (MTP).

- Supported file extensions: .jpg, .bmp, .png, .gif.
- Animated GIF files are not supported.

- Some files may not operate due to a different recording format or the condition of the file.

Viewing Pictures

1. Connect the USB device to the USB port.
2. Touch the screen to open to full screen. Touch the screen again to return to the previous screen.

If the USB device is already connected:

1. Press ⌂.
2. Touch GALLERY.

Some features are disabled while the vehicle is in motion.

Viewing a Slide Show

1. Touch ▶ from the picture screen.
2. Touch the screen to cancel the slide show during the slide show playback.

Viewing a Previous or Next Picture

Touch < or > from the picture screen.

Rotating a Picture

Touch ↺ from the picture screen.

Enlarging a Picture

Touch 🔍 from the picture screen.

Using the USB Picture Menu

1. Touch MENU from the picture screen.
2. Touch the appropriate menu:
   - Slide Show Time: Allows selection of the slide show interval.
   - Clock, Temp. Display: Allows selection of On or Off to show the clock and temperature on the full screen.
   - Display Settings: Adjusts for Brightness and Contrast.
3. Touch ↩ to exit.

Auxiliary Jack

This vehicle may have an AUX jack in the center console storage.

Possible auxiliary audio sources include:

- Laptop computer
- Audio music player

This jack is not an audio output. Do not plug headphones into the auxiliary input jack. Auxiliary devices should be set up while the vehicle is in P (Park).

Connect a 3.5 mm (1/8 in) cable from the auxiliary device to the auxiliary input jack.

If an auxiliary device has already been connected, but a different source is currently active, repeatedly press MEDIA on the center stack to scroll through all of the available audio source screens, until the AUX source screen is shown.

Base Radio

Playing from the AUX Jack

An auxiliary device is played through the audio system and controlled through the device itself.

AUX Menu

Press the MENU knob to display the AUX menu and the following may display:

Tone Settings : Select to adjust Bass, Midrange, Treble, Balance, Fade, and EQ (Equalizer). See "Tone Settings" in *AM-FM Radio (Base Radio with Touchscreen)* ⇨ *150* or *AM-FM Radio (Base Radio)* ⇨ *148*.

Auto Volume : If equipped, see "Playing an Audio CD" previously in this section.

DSP : If equipped, this feature adjusts the pre-defined settings. See "DSP" in *AM-FM Radio (Base Radio with Touchscreen)* ⇨ *150* or *AM-FM Radio (Base Radio)* ⇨ *148*.

EQ (Equalizer) : If equipped, this feature adjusts the pre-defined equalizer settings. See "EQ (Equalizer)" in *AM-FM Radio (Base Radio with Touchscreen)* ⇨ *150* or *AM-FM Radio (Base Radio)* ⇨ *148*.

Base Radio with Touchscreen

Play will begin when the system has finished reading the information on the device.

Playing Music

To play the music from the device, if the device is already connected:

1. Press ⌂.
2. Touch AUDIO.
3. Touch Source.
4. Touch AUX.

To adjust the tone settings, see "Audio Settings" in "System Settings" under *AM-FM Radio (Base Radio with Touchscreen)* ⇨ *150* or *AM-FM Radio (Base Radio)* ⇨ *148*.

Bluetooth Audio

If equipped, music may be played from a paired Bluetooth device. See "Pairing" under *Bluetooth (Overview)* ⇨ *172* or *Bluetooth (Infotainment Controls)* ⇨ *173* for help pairing a device.

Volume and song selection may be controlled by using the infotainment controls or the phone/device.
If Bluetooth Audio is selected and nothing is heard, check the volume setting on both the phone/device and the infotainment system.

Launch music by touching MEDIA on the Home Page.

To play music via Bluetooth:

1. Power on the device, and pair to connect the device.
2. Once paired, go into the audio application from the Home Page or via the application tray. Select MEDIA until Bluetooth displays.

Bluetooth Audio Menu

Press the MENU screen button to display the Bluetooth Audio menu. The following may be available:

Tone: Turn the MENU knob to adjust the tone settings.

Press ◁ BACK to go back to the previous menu.

Manage Bluetooth Devices: Select to go to the Bluetooth page to add or delete devices.

When selecting Bluetooth Audio, the radio may not be able to launch the audio player on the connected device to start playing. When the vehicle is not moving, use the phone to begin playback.

All devices launch audio differently. When selecting Bluetooth Audio as a source, the radio may show as paused on the screen. Press play on the device or press ▶ to begin playback.

Some phones support sending Bluetooth music information to display on the radio. When the radio receives this information, it will check to see if any is available and display it. For more information about supported Bluetooth features, see www.gm.com/bluetooth for U.S. and Canada only.

Voice Recognition

If equipped, voice recognition allows for hands-free operation within the audio and phone applications. This feature can be started by pressing on the steering wheel or by touching on the infotainment display.

However, not all features within these areas are supported by voice commands. Generally, only complex tasks that require multiple manual interactions to complete are supported by voice commands.

For example, tasks that take more than one or two button presses such as selecting a song or artist to play from a media device would be supported by voice commands. Other tasks, like adjusting the volume or seeking up or down are audio features that are easily performed by pressing one or two buttons, and are not supported by voice commands.

In general there are flexible ways to speak commands for completing the tasks. Most of them, except destination entry and voice keypad, can be completed in a single command. If the task takes more than one command to complete, the first command would be to indicate the kind of task that is to be performed. The system replies with prompts that lead through a dialog to enter the necessary information.

Voice recognition can be used when the ignition is on or when Retained Accessory Power (RAP) is active. See *Retained Accessory Power (RAP)* ⇨ *211*.

Using Voice Recognition

Voice recognition becomes available once the system has been initialized. This begins when the ignition is turned on. Initialization may take a few moments.

1. Press on the steering wheel control to activate voice recognition, or touch on the infotainment display.
   - If voice recognition is started from the steering wheel control, the instrument cluster displays the selections and visual dialog content.
   - If voice recognition is started from the infotainment display, the selections and visual dialog content are displayed on both the infotainment display and the instrument cluster display.
2. The audio system mutes and the system plays a prompt followed by a beep.
3. Wait until after the beep completes, then clearly speak one of the commands described in this section.

   Press to interrupt any voice recognition system prompt. For example, if the prompt seems to be taking too long to finish, press again and the beep should happen right away.

There are two voice prompt modes supported:

- Long verbal prompts: The longer prompts provide more information regarding the supported actions.
- Short prompts: The short prompts provide simple instructions about what can be stated.

If a command is not spoken, the voice recognition system says a help prompt.

Prompts and Screen Displays

While a voice recognition session is active, there will be corresponding buttons on screens displayed. Manual interaction in the voice recognition session is permitted. Interaction during a voice session may be completed entirely using

voice commands, or some selections may expedite a session. If a selection is made using a manual control, the dialog will progress in the same way as if the selection were made through a voice command. Once the system is able to complete the task, or the session is terminated, the voice recognition dialog stops.

An example of this type of manual intervention is touching an entry of a displayed number list instead of speaking the number associated with the entry desired.

Canceling Voice Recognition

- Touch ⌂ to terminate the voice recognition session that was initiated by touching on the infotainment display.
- Press or say “Cancel” or “Exit” to terminate the voice recognition session and display the screen from which voice recognition was initiated.
- Press on the steering wheel controls to terminate the voice session and display the screen from which voice recognition was initiated.

Helpful Hints for Speaking Commands

Voice recognition can understand commands that are either naturally stated in sentence form (English only), or direct commands that state the application and the task.

For languages that do not support natural language commands in sentence form, use the direct commands shown as examples on the display screen.

For best results:

- Listen for the prompt and wait for the beep before saying a command or reply.
- Say “Help” or look at the screen display for commands.
- Voice recognition system prompts can be interrupted during a prompt by pressing again.

  For example, if the prompt seems to be taking too long to finish, or if what is being prompted causes a need for an immediate reply, press again and wait for the beep.
- Speak the command naturally, not too fast, not too slow. Use direct commands without a lot of extra words.
- Usually Phone and Audio commands can be spoken in a single command; for example, “Call Dave Smith at work,” “Play” followed by the artist or song name, or “Tune” followed by the radio station number.

There is no need to memorize specific command words. Direct commands might be more clearly understood by the system. An example of a direct command would be “Call 555-1212.” Examples of these direct commands are

displayed on most of the screens while a voice session is active. If “Phone” or “Phone Commands,” is stated, the system understands that a phone call is requested and will respond with questions until enough details are gathered.

If the phone number has been saved with a name and a place, the direct command should include both, for example “Call Dave Smith at work.”

Using Voice Recognition for List Options

When a list is displayed, a voice prompt will ask to confirm or select an option from that list. A selection can be made by manually selecting the item, or by speaking the line number for the item to select.

When a screen contains a list, options may be available but not displayed. The list on a voice recognition screen functions the same as a list on other screens. Scrolling can be used to help display other entries from the list. Manually scrolling or paging the list on a screen during a voice recognition session suspends the current voice recognition event and plays the prompt “Make your selection from the list using the manual controls or press the Back button to try again.”

If manual selection takes more than 15 seconds, the session terminates and prompts that it has timed out. The screen returns to the screen where voice recognition was initiated.

The Back Command

Say “Back” or press the Back button to go to the previous screen.

If in voice recognition, and “Back” is stated all the way through to the initial screen, then “Back” is stated one more time, the voice recognition session will cancel.

Help

Say “Help” on any voice recognition screen and the help prompt for the screen is played. Additionally, a pop-up displays a text version of the help prompt. Depending on how voice recognition was initiated, the Help pop-up will either display on the instrument cluster or the infotainment display. Touch Dismiss to make the pop-up go away.

Pressing while the help prompt is playing will terminate the prompt and a beep will be heard. Doing this will stop the help prompt so that a voice command can be used.

Voice Recognition for the Radio

Touch on the infotainment display to launch audio voice recognition.

If is touched in a radio screen, the voice commands for radio and media features are available.

“Switch to AM” : Switch bands to AM and tune to the last AM radio station.

“Switch to FM” : Switch bands to FM and tune to the last FM radio station.

“Switch to SXM” : Switch bands to SiriusXM (if equipped) and tune to the last SiriusXM channel.

“Tune to <AM frequency> AM” : Tune to the radio station whose frequency is identified in the command (like “nine fifty”).

“Tune to <FM frequency> FM” : Tune to the radio station whose frequency is identified in the command (like “one o one point one”).

“Tune to SXM <SXM channel number>” : Tune to the SiriusXM (if equipped) radio station whose channel number is identified in the command.

“Tune to SXM <SXM channel name>” : Tune to the SiriusXM (if equipped) radio station whose channel name is identified in the command.

Voice Recognition for Audio My Media

If browsing My Media when the voice button is selected, the voice recognition commands for My Media features are available.

“Play Artist” : Begin a dialog to enter a specific Artist name.

“Play Artist <artist name>” : Begin playback of the media selection identified in the command.

“Play Album” : Begin a dialog to enter a specific album name.

“Play Album <album name>” : Begin playback of the identified album name in the command.

“Play Song” : Begin a dialog to enter a specific song name.

“Play Song <song name>” : Begin playback of the identified song name in the command.

“Play Genre” : Begin a dialog to enter a specific genre.

“Play Genre <genre name>” : Begin playback of the media selection identified in the command.

“Play Playlist” : Begin a dialog to enter a specific playlist name.

“Play Playlist <playlist name>” : Begin playback of the identified playlist in the command.

“Play <device name>” : Play music from a specific device identified by name. The device name is the name displayed on the screen when the device is first selected as an audio source.

“Play Chapter” : Begin a dialog to enter a specific name.

“Play Chapter <chapter name>” : Begin playback of the media selection identified in the command.

“Play Audiobook” : Begin a dialog to enter a specific name.

“Play Audiobook <audiobook name>” : Begin playback of the media selection identified in the command.

“Play CD Track <track number>” : Begin playback of the CD at the track identified in the command.

“Play Episode” : Begin a dialog to enter a specific name.

“Play Episode <episode name>” : Begin playback of the media selection identified in the command.

“Play Podcast” : Begin a dialog to enter a specific name.

“Play Podcast <podcast name>” : Begin playback of the media selection identified in the command.

“Play Video” : Begin a dialog to enter a specific name.

“Play Video <video name>” : Begin playback of the media selection identified in the command.

“My Media” : Begin a dialog to enter the desired media content.

Handling Large Amounts of Media Content

It is expected that large amounts of media content will be brought into the vehicle. It may be necessary to handle large amounts of media content in a different way than smaller amounts of media. The system may limit the options of voice recognition by not allowing selection of song titles by voice at the highest level if the number of songs exceeds the maximum limit.

Voice command option changes through media content limits are:

- Song files including other individual files of all media types such as audiobook chapters, podcast episodes, and videos.
- Album type folders including types such as albums and audiobooks.

There are no restrictions if the number of song files and albums is less than 4,000. When the number of song files connected to the system is between 4,000 and 8,000, the content cannot be accessed directly with one command like “Play <song name>.”

The restriction is that the command “Play Song” must be spoken first; the system will then ask for the song name. The reply command would be to say the name of the song to play.

Similar limits exist for album content. If there are more than 4,000 albums, but less than 8,000, the content cannot be accessed directly with one command like, “Play <album name>.” The command “Play Album” must first be spoken; the system will then ask for the album name. The reply would be to say the name of the album to play.

Once the number of songs has exceeded approximately 8,000, there is no support for accessing the songs directly through voice commands. There will still be access to the media content by using commands for playlists, artists, and genres.

The access commands for playlists, artists, and genres are prohibited after the number of this type of media exceeds 4,000.

The system will provide feedback the first time voice recognition is initiated if it has become apparent that any of these limits are reached during a device initializing process.

Voice Recognition for the Phone

“Call <contact name>” : Initiate a call to an entered contact. The command may include location if the contact has location numbers stored.

“Call <contact name> At Home,” “At Work,” “On Mobile,” or “On Other” : Initiate a call to an entered contact and location at home, at work, on mobile device, or on another phone.

“Call <phone number>” : Initiate a call to a standard phone number seven or 10 digits in length, and also 911, 411, or 611.

“Pair Phone” : Begins the Bluetooth pairing process. Follow instructions on the radio display.

“Switch Phone” : Select a different phone for outgoing calls.

“Voice Keypad” : Begins a dialog to enter special numbers like international numbers. The numbers can be entered in groups of digits with each group of digits being repeated back by the system. If the group of digits is not correct, the command “Delete” will remove the last group of digits and allow them to be re-entered. Once the entire number has been entered, the command “Call” will start dialing the number.

“Voice Mail” : Initiate a call to voice mail numbers.

Voice Recognition for OnStar (If Equipped)

“OnStar” : Begin OnStar Voice Recognition.

Bluetooth Speech Recognition (If Equipped)

Voice Pass-Thru allows access to the speech recognition commands on the cell phone. See your cell phone manufacturer’s user guide to see if the cell phone supports this feature.

Activating this function will start the Bluetooth Speech Recognition on a connected phone.

The steering wheel controls are used to operate this function.

Press and hold to activate.
A voice session begins so that voice commands can be given to Siri or many other controls provided by the cell phone.

Press ✓ to exit or press to close and return to the previous application prior to the start of Voice Pass-Thru.

Phone

Bluetooth (Overview)

Instructions for using the cell phone may differ between infotainment systems. The base radio and base radio with touchscreen instructions are included in this manual. See the infotainment manual for instructions on the uplevel radios.

Bluetooth-capable systems can interact with many cell phones, allowing:

- Placement and receipt of calls in a hands-free mode.
- Sharing of the cell phone's address book or contact list with the vehicle.

To minimize driver distraction, before driving, and with the vehicle parked:

- Become familiar with the features of the cell phone. Organize the phone book and contact lists clearly and delete duplicate or rarely used entries. If possible, program speed dial or other shortcuts.
- Review the controls and operation of the infotainment system.
- Pair cell phone(s) to the vehicle. The system may not work with all cell phones. See "Pairing" in this section.
- If the cell phone has voice dialing capability, learn to use that feature to access the address book or contact list.
- See "Deleting a Bluetooth Device" in this section.

⚠ Warning

When using a cell phone, it can be distracting to look too long or too often at the screen of the phone or the infotainment system. Taking your eyes off the road too long or too often could cause a crash resulting in injury or death. Focus your attention on driving.

Vehicles with a Bluetooth system can use a Bluetooth-capable cell phone with a Hands-Free Profile to make and receive phone calls. The infotainment system and voice recognition are used to control the system. The system can be used with the ignition on or in ACC/ACCESSORY. The range of the Bluetooth system can be up to 9.1 m (30 ft). Not all phones support all functions and not all phones work with the Bluetooth system. For U.S. and Canada only, see www.gm.com/bluetooth for more information about compatible phones.

Bluetooth Controls

Use the buttons on the center stack, infotainment display, and steering wheel to operate the Bluetooth system.

Steering Wheel Controls

: Press to answer incoming calls, confirm system information, and start voice recognition.

: Press to end a call, reject a call, or cancel an operation. Press to mute or unmute the infotainment system.

Infotainment System Controls

For information about how to navigate the menu system using the infotainment controls, see *Overview (Base Radio with Touchscreen)* ⇨ *144* or *Overview (Base Radio)* ⇨ *140*.

MENU : Turn to scroll through a list. Press to select the highlighted list option.

: Press to go to the Home Page. See *Home Page (Base Radio with Touchscreen)* ⇨ *147* or *Home Page (Base Radio)* ⇨ *145*.

PHONE or : Select to enter the phone main menu.
See *Bluetooth (Overview)* ⇨ *172* or *Bluetooth (Infotainment Controls)* ⇨ *173*.

Voice Recognition

If equipped, the voice recognition system uses commands to control the system and dial phone numbers.

Noise : The system may not recognize voice commands if there is too much background noise, such as noise from open windows or loud talking inside the vehicle.

When to Speak : A tone sounds to indicate that the system is ready for a voice command. Wait for the tone and then speak.

How to Speak : Speak clearly in a calm and natural voice.

Audio System

When using the Bluetooth system, sound comes through the vehicle's front audio system speakers and overrides the audio system. Use the ⏻ knob during a call to change the volume level. The system maintains a minimum volume level.

Bluetooth Audio Quality

Turn off the Echo and Noise cancellation feature on your phone, if supported, for the best hands-free performance.

See www.gm.com/bluetooth for U.S. and Canada only.

Bluetooth (Infotainment Controls)

To use infotainment controls to access the menu system, see *Overview (Base Radio with Touchscreen)* ⇨ *144* or *Overview (Base Radio)* ⇨ *140*.

Pairing

A Bluetooth-enabled cell phone must be paired to the Bluetooth system and then connected to the vehicle before it can be used. See your cell phone manufacturer's user guide for Bluetooth functions before pairing the cell phone. If a Bluetooth phone is not connected, calls will be made using OnStar Hands-Free Calling, if available. See *OnStar Overview* ⇨ *421*.

Pairing Information

- A Bluetooth phone with MP3 capability cannot be paired to the vehicle as a phone and an MP3 player at the same time.
- Up to 10 cell phones can be paired to the Bluetooth system.
- The pairing process is disabled when the vehicle is moving.
- Pairing only needs to be completed once, unless the pairing information on the cell phone changes or the cell phone is deleted from the system.
- Only one paired cell phone can be connected to the Bluetooth system at a time.
- If multiple paired cell phones are within range of the system, the system connects to the first available paired cell phone in the order that they were first paired to the system.

When the Bluetooth device and infotainment system are successfully paired, the phone book is downloaded automatically. This is dependent on the type of the phone paired. If the automatic download does not occur, proceed with the phone book download on the phone.

Pairing a Phone - SSP and No Paired Device

When there is no paired device on the infotainment system and Simple Secure Pairing (SSP) is supported:

1. Press ⌂.
2. Touch PHONE, press on the center stack, or press on the steering wheel without OnStar.
3. Touch Search Device.
4. Touch the desired device to pair on the searched list screen.
5. Touch Yes on the pop-up screen of the Bluetooth device and infotainment system.
6. When the Bluetooth device and infotainment system are successfully paired, the phone screen is displayed on the infotainment system.

Pairing a Phone - SSP and Paired Device

When a paired device is on the infotainment system and SSP is supported:

1. Press ⌂.
2. Touch Settings.
3. Touch Bluetooth, then Device Management.
4. Touch the desired device to pair. When the Bluetooth device and infotainment system are successfully paired, / is displayed on the pair device screen. If no desired device is available go to Step 5.
5. Touch Search Device to search for the desired device.
6. Touch the desired device to pair on the searched list screen.
7. Touch Yes on the pop-up screen of the Bluetooth device and infotainment system.

- The connected phone is highlighted by .
- / indicates the hands-free and phone music functions are enabled.
- indicates only the hands-free function is enabled.
- indicates only Bluetooth music is enabled.

Pairing a Phone - No SSP and No Paired Device

When there is no paired device on the infotainment system and SSP is not supported:

1. Press .
2. Touch PHONE, press on the center stack, or press on the steering wheel without OnStar.
3. Touch Search Device.
4. Touch the desired device to pair on the searched list screen.
5. Input the Personal Identification Number (PIN) code (default: 1234) to the Bluetooth device. When the Bluetooth device and infotainment system are successfully paired, the PHONE screen is displayed on the infotainment system.

When the connection fails, a failure message is displayed on the infotainment system.

If a Bluetooth device was previously connected, the infotainment system executes the auto connection. However, if the Bluetooth setting on the Bluetooth device is turned off, a failure message is displayed on the infotainment system.

Pairing a Phone - No SSP and Paired Device

When a paired device is on the infotainment system and SSP is not supported:

1. Press .
2. Touch Settings.
3. Touch Bluetooth, then Device Management.
4. Touch the desired device to pair. When the Bluetooth device and infotainment system are successfully paired, / is displayed on the pair device screen. If no desired device is available go to Step 5.
5. Touch Search Device to search for the desired device.
6. Touch the desired device to pair on the searched list screen.
7. Input the Personal Identification Number (PIN) code (default: 1234) to the Bluetooth device. When the Bluetooth device and infotainment system are successfully paired, / is displayed on the pair device screen.

- The connected phone is highlighted by .

- ♪ / ☎ indicates the hands-free and phone music functions are enabled.
- ☎ indicates only the hands-free function is enabled.
- ♪ indicates only Bluetooth music is enabled.

Connecting a Paired Bluetooth Device

1. Press ⌂.
2. Touch Settings.
3. Touch Bluetooth, then Device Management.
4. Touch the device to be connected.

Checking the Bluetooth Connection

1. Press ⌂.
2. Touch Settings.
3. Touch Bluetooth, then Device Management.
4. The paired device will show.

Disconnecting a Bluetooth Device

1. Press ⌂.
2. Touch Settings.
3. Touch Bluetooth, then Device Management.
4. Touch the name of the device to be disconnected.
5. Touch Disconnect.

Deleting a Bluetooth Device

1. Press ⌂.
2. Touch Settings.
3. Touch Bluetooth, then Device Management.
4. Touch the device to delete.
5. Touch 🗑
6. Touch Delete.

Bluetooth Music

Before playing Bluetooth music, read the following information.

- A cell phone or Bluetooth device that supports Advanced Audio Distribution Profile (A2DP) versions over 1.2 must be registered and connected to the product.
- From the cell phone or Bluetooth device, find the Bluetooth device type to set/connect the item as a stereo headset.
- ♪ will appear on the screen if the stereo headset is successfully connected.
- The sound played by the Bluetooth device is delivered through the infotainment system.
- Bluetooth music can be played only when a Bluetooth device has been connected. To play Bluetooth music, connect the Bluetooth phone to the infotainment system.
- If the Bluetooth device is disconnected while playing phone music, the music is discontinued. The audio streaming function may not be supported in some Bluetooth phones. Only one function can be used at a time between the Bluetooth hands-free or Phone

music function. For example, if you convert to Bluetooth hands-free while playing Phone music, the music is discontinued. Playing music from the vehicle is not possible when there are no music files stored in the cell phone.

Playing Bluetooth Music

1. Press ⌂.
2. Touch AUDIO.
3. Touch Source.
4. Touch Bluetooth.

Pause

Touch ❚❚ to pause.

Touch ▶ to resume.

Playing the Next Song

Touch ⏭.

Playing the Previous Song

Touch ⏮ within two seconds of playback time to play the previous song.

Returning to the Beginning of the Current Song

Touch ⏮ after two seconds of playback time.

Search

Touch and hold ⏮ or ⏭ to rewind or fast forward.

Playing Music Randomly

Touch ⤮ during playback. Touch again to return to normal play.

This function may not be supported depending on the Bluetooth device.

Do not change the track too quickly when playing Bluetooth music.

Conditions that may occur when playing Bluetooth music:

- It takes time to transmit data from the Bluetooth device to the infotainment system.
- If the cell phone or Bluetooth device is not in the waiting screen mode, it may not automatically play.
- The infotainment system transmits the order to play from the Bluetooth device in the Bluetooth music play mode. If this is done in a different mode, then the device transmits the order to stop. Depending on the Bluetooth device options, this order to play/stop may take time to activate.
- If the Bluetooth music playback is not functioning, then check to see if the Bluetooth device is in the waiting screen mode.
- Sounds may be cut off during the Bluetooth music playback.
- The infotainment system outputs the audio from the cell phone or Bluetooth device as it is transmitted.

Apple CarPlay and Android Auto

If equipped, Android Auto and/or Apple CarPlay capability may be available through a compatible smartphone. If available,

PROJECTION will appear on the Home Page of the infotainment display.

To use Android Auto or Apple CarPlay:

1. Download the Android Auto app to your phone from the Google Play store. No app is required for Apple CarPlay.
2. Connect an Android phone or iPhone by using the factory provided phone USB cable and plugging into a USB data port. For best performance, it is highly recommended to use the device's factory-provided USB cable. Aftermarket or third-party cables may not work.
3. When the phone is first connected to activate Apple CarPlay or Android Auto, the message "Device Projection Privacy Consent" will appear.
   - Select Continue to launch Apple CarPlay or Android Auto.
   - Select Disable to remove Apple CarPlay and Android Auto capability from the vehicle Settings menu. Other functions may still work.

PROJECTION on the Home Page will change to Android Auto or Apple CarPlay depending on the phone. Android Auto and/or Apple CarPlay may automatically launch upon USB connection. If not, touch the ANDROID AUTO and/or APPLE CARPLAY icon on the Home Page to launch.

Press ⌂ on the center stack to return to the Home Page.

For further information on how to set up Android Auto and Apple CarPlay in the vehicle, see www.my.chevrolet.com or see *Customer Assistance Offices ⇨ 409*.

Android Auto is provided by Google and is subject to Google's terms and privacy policy. Apple CarPlay is provided by Apple and is subject to Apple's terms and privacy policy. Data plan rates apply. For Android Auto support see https://support.google.com/androidauto. For Apple CarPlay support see www.apple.com/ios/carplay/. Apple or Google may change or suspend availability at any time. Android Auto, Android, Google, Google Play, and other marks are trademarks of Google Inc.; Apple CarPlay is a trademark of Apple Inc.

Trademarks and License Agreements

FCC Information

See *Radio Frequency Statement* ⇨ *417*.

Made for iPod iPhone

"Made for iPod" and "Made for iPhone" mean that an electronic accessory has been designed to connect specifically to iPod or iPhone and has been certified by the developer to meet Apple performance standards. Apple is not responsible for the operation of this device or its compliance with safety and regulatory standards. Please note that the use of this accessory with iPod or iPhone may affect wireless performance. iPhone, iPod, iPod classic, iPod nano, iPod shuffle, and iPod touch are trademarks of Apple Inc., registered in the U.S. and other countries.

SiriusXM SATELLITE RADIO

Fees and Taxes: Subscription fee, taxes, one time activation fee, and other fees may apply. Subscription fee is consumer only. All fees and programming subject to change. Subscriptions subject to Customer Agreement available at www.siriusxm.com. SiriusXM service only available in the 48 contiguous United States and Canada.

In Canada: Some deterioration of service may occur in extreme northern latitudes. This is beyond the control of SiriusXM Satellite Radio.

Explicit Language Notice: Channels with frequent explicit language are indicated with an “XL” preceding the channel name. Channel blocking is available for SiriusXM Satellite Radio receivers by notifying SiriusXM:

- USA Customers — See www.siriusxm.com or call 1-888-601-6296.
- Canadian Customers — See www.siriusxm.ca or call 1-877-438-9677.

It is prohibited to copy, decompile, disassemble, reverse engineer, hack, manipulate, or otherwise make available any technology or software incorporated in receivers compatible with the SiriusXM Satellite Radio System or that support the SiriusXM website, the Online Service or any of its content. Furthermore, the AMBER voice compression software included in this product is protected by intellectual property rights including patent rights, copyrights, and trade secrets of Digital Voice Systems, Inc.

General Requirements:

1. A License Agreement from SiriusXM is required for any product that incorporates SiriusXM Technology and/or for use of any of the SiriusXM marks to be manufactured, distributed, or marketed in the SiriusXM Service Area.
2. For products to be distributed, marketed, and/or sold in Canada, a separate agreement is required with Canadian Satellite Radio Inc. (operating as SiriusXM Canada).

Other Information

The Bluetooth word mark and logos are owned by the Bluetooth SIG, Inc. and any use of such marks by General Motors is under license. Other trademarks and trade names are those of their respective owners.

Schedule I: Gracenote EULA

Music recognition technology and related data are provided by Gracenote. Gracenote is the industry standard in music recognition technology and related content delivery. For more information visit www.gracenote.com.

Music-related data from Gracenote, Inc., copyright 2000 to present Gracenote. Gracenote Software, copyright 2000 to present Gracenote. One or more patents owned by Gracenote may apply to this product and service. See the Gracenote website for a non-exhaustive list of applicable Gracenote patents. Gracenote, CDDB, MusicID, MediaVOCS, the Gracenote logo and logotype, and the "Powered by Gracenote" logo are either registered trademarks or trademarks of Gracenote in the United States and/or other countries.

Gracenote Terms of Use

This application or device contains software from Gracenote, Inc. of Emeryville, California ("Gracenote"). The software from Gracenote (the "Gracenote Software") enables this application to do disc or file identification and obtain music-related information, including name, artist, track, and title information ("Gracenote Data") from online servers or embedded databases (collectively, "Gracenote Servers") and to perform other functions. You may use Gracenote Data only by means of the intended End-User functions of this application or device.

This application or device may contain content belonging to Gracenote’s providers. If so, all of the restrictions set forth herein with respect to Gracenote Data shall also apply to such content and such content providers shall be entitled to

all of the benefits and protections set forth herein that are available to Gracenote.

You agree that you will use Gracenote Data, the Gracenote Software, and Gracenote Servers for your own personal non-commercial use only. You agree not to assign, copy, transfer or transmit the Gracenote Software or any Gracenote Data to any third party. YOU AGREE NOT TO USE OR EXPLOIT GRACENOTE DATA, THE GRACENOTE SOFTWARE, OR GRACENOTE SERVERS, EXCEPT AS EXPRESSLY PERMITTED HEREIN.

You agree that your non-exclusive license to use the Gracenote Data, the Gracenote Software, and Gracenote Servers will terminate if you violate these restrictions. If your license terminates, you agree to cease any and all use of the Gracenote Data, the Gracenote Software, and Gracenote Servers. Gracenote reserves all rights in Gracenote Data, the Gracenote Software, and the Gracenote Servers, including all ownership rights. Under no circumstances will Gracenote become liable for any payment to you for any information that you provide. You agree that Gracenote may enforce its rights under this Agreement against you directly in its own name.

The Gracenote service uses a unique identifier to track queries for statistical purposes. The purpose of a randomly assigned numeric identifier is to allow the Gracenote service to count queries without knowing anything about who you are. For more information, see the web page for the Gracenote Privacy Policy for the Gracenote service.

The Gracenote Software and each item of Gracenote Data are licensed to you "AS IS." Gracenote makes no representations or warranties, express or implied, regarding the accuracy of any Gracenote Data. Gracenote reserves the right to delete data from the Gracenote Servers or to change data categories for any cause that Gracenote deems sufficient. No warranty is made that the Gracenote Software or Gracenote Servers are error-free or that functioning of Gracenote Software or Gracenote Servers will be uninterrupted. Gracenote is not obligated to provide you with new enhanced or additional data types or categories that Gracenote may provide in the future and is free to discontinue its services at any time.

GRACENOTE DISCLAIMS ALL WARRANTIES EXPRESS OR IMPLIED, INCLUDING, BUT NOT LIMITED TO, IMPLIED WARRANTIES OF MERCHANTABILITY, FITNESS FOR A PARTICULAR PURPOSE, TITLE, AND NON-INFRINGEMENT. GRACENOTE DOES NOT WARRANT THE RESULTS THAT WILL BE OBTAINED BY YOUR USE OF THE GRACENOTE SOFTWARE OR ANY GRACENOTE SERVER. IN NO CASE WILL GRACENOTE BE LIABLE FOR ANY CONSEQUENTIAL OR

INCIDENTAL DAMAGES OR FOR ANY LOST PROFITS OR LOST REVENUES.

Copyright 2013. Gracenote, Inc. All Rights Reserved.

Unicode

Copyright 1991-2013 Unicode, Inc. All rights reserved. Distributed under the Terms of Use in http://www.unicode.org/copyright.html.

Free Type Project

Portions of this software are copyright 2013 The FreeType Project (http://www.freetype.org). All rights reserved.

iType

iType is a trademark of Monotype Imaging Inc. registered in the U.S. Patent & Trademark Office and may be registered in certain other jurisdictions.

Open Source SW

The open source code used in this device can be downloaded at the webpage shown in the information at the center stack display. Further information concerning the OSS licenses is shown in the center stack display.

QNX

Portions of this software are copyright 2008-2013, QNX Software Systems. All rights reserved.

Part C – EULA

Copyright 2013, Software Systems GmbH & Co. KG. All Rights Reserved.

The product you have purchased ("Product") contains Software (Runtime Configuration No. 505962; "Software") which is distributed by or on behalf of the Product manufacturer "Manufacturer") under license from Software Systems Co. ("QSSC"). You may only use the Software in the Product and in compliance with the license terms below.

Subject to the terms and conditions of this License, QSSC hereby grants you a limited, non-exclusive, non-transferable license to use the Software in the Product for the purpose intended by the Manufacturer. If permitted by the Manufacturer, or by applicable law, you may make one backup copy of the Software as part of the Product software. QSSC and its licensors reserve all license+C31 rights not expressly granted herein, and retain all right, title and interest in and to all copies of the Software, including all intellectual property rights therein. Unless required by applicable law you may not reproduce, distribute or transfer, or de-compile, disassemble or otherwise attempt to unbundle, reverse engineer, modify or create derivative works of, the Software. You agree: (1) not to remove, cover or alter any proprietary notices, labels or marks in or on the Software, and to ensure that all copies bear any notice contained on the original; and (2) not to export the Product or the Software in contravention of applicable export control laws.

EXCEPT TO THE EXTENT OTHERWISE REQUIRED BY APPLICABLE LAW, QSSC AND ITS

LICENSORS PROVIDE THE SOFTWARE ON AN "AS IS" BASIS, WITHOUT WARRANTIES OR CONDITIONS OF ANY KIND, EITHER EXPRESS OR IMPLIED INCLUDING, WITHOUT LIMITATION, ANY WARRANTIES OR CONDITIONS OF TITLE, NON-INFRINGEMENT, MERCHANTABILITY OR FITNESS FOR A PARTICULAR PURPOSE. ANY WARRANTIES OR OTHER PROVISIONS OFFERED BY THE MANUFACTURER OR ITS DISTRIBUTOR(S) THAT DIFFER FROM THIS LICENSE ARE OFFERED BY THE MANUFACTURER OR ITS DISTRIBUTOR(S) ALONE AND NOT BY QSSC, ITS AFFILIATES OR THEIR LICENSORS. YOU ASSUME ANY RISKS ASSOCIATED WITH YOUR USE OF THE SOFTWARE UNDER THIS LICENSE.

EXCEPT TO THE EXTENT OTHERWISE REQUIRED BY APPLICABLE LAW (SUCH AS IN THE CASE OF DELIBERATE OR GROSSLY NEGLIGENT ACTS), IN NO EVENT SHALL QSSC, ITS AFFILIATES OR THEIR LICENSORS BE LIABLE TO YOU UNDER ANY LEGAL THEORY, WHETHER IN TORT (INCLUDING NEGLIGENCE), CONTRACT OR OTHERWISE, FOR DAMAGES, INCLUDING ANY DIRECT, INDIRECT, SPECIAL, INCIDENTAL, OR CONSEQUENTIAL DAMAGES OF ANY CHARACTER ARISING AS A RESULT OF THIS LICENSE OR OUT OF THE USE OR INABILITY TO USE THE PRODUCT (INCLUDING BUT NOT LIMITED TO DAMAGES FOR LOSS OF GOODWILL, WORK STOPPAGE, PRODUCT FAILURE OR MALFUNCTION, OR ANY AND ALL OTHER COMMERCIAL DAMAGES OR LOSSES), EVEN IF QSSC, ITS AFFILIATES OR THEIR LICENSORS HAVE BEEN ADVISED OF THE POSSIBILITY OF SUCH DAMAGES.

WMA

This product is protected by certain intellectual property rights of Microsoft. Use or distribution of such technology outside of this product is prohibited without a license from Microsoft.

For more information on the Software, including any open source software license terms (and available source code) as well as copyright attributions applicable to the Runtime Configuration indicated above, please contact the Manufacturer or contact QSSC at 175 Terence Matthews Crescent, Kanata, Ontario, Canada K2M 1W8 (licensing@qnx.com).

END USER NOTICE

The marks of companies displayed by this product to indicate business locations are the marks of their respective owners. The use of such marks in this product does not imply any sponsorship, approval, or endorsement by such companies of this product.

Climate Controls

Climate Control Systems
Climate Control Systems (with Heater Only) 184
Climate Control Systems (with Air Conditioning) 186

Air Vents
Air Vents 187

Maintenance
Passenger Compartment Air Filter 188
Service 189

Climate Control Systems

Climate Control Systems (with Heater Only)

With this system, the heating and ventilation can be controlled.

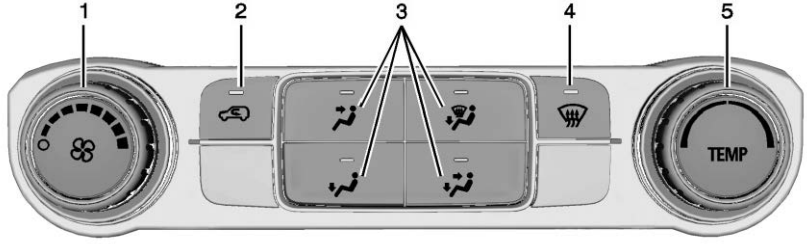

1. Fan Control
2. Air Recirculation
3. Air Delivery Mode Controls
4. Defrost
5. TEMP (Temperature Control)

TEMP : Turn clockwise or counterclockwise to increase or decrease the temperature inside the vehicle.

: Turn clockwise or counterclockwise to increase or decrease the fan speed. Turn the knob all the way counterclockwise to turn the fan off.

Air Delivery Mode Controls : Press , , , or to change the direction of the airflow. An indicator light comes on in the selected mode button.

: Air is directed to the instrument panel outlets.

: Air is divided between the instrument panel and floor outlets.

: Air is directed to the floor outlets, with some air directed to the windshield, side window, and second row floor outlets.

: This mode clears the windows of fog or moisture. Air is directed to the windshield, floor outlets, and side window vents.

: Press to clear the windshield of fog or frost more quickly. Air is directed to the windshield and the side window vents. The system automatically forces outside air into the vehicle.

Do not drive the vehicle until all the windows are clear.

See *Air Vents* ⇨ *187*.

: Press to turn on recirculation. An indicator light comes on. Air is recirculated to quickly cool the inside of the vehicle. It can also be used to help reduce outside air and odors that enter the vehicle.

Climate Control Systems (with Air Conditioning)

With this system the heating, cooling, and ventilation can be controlled.

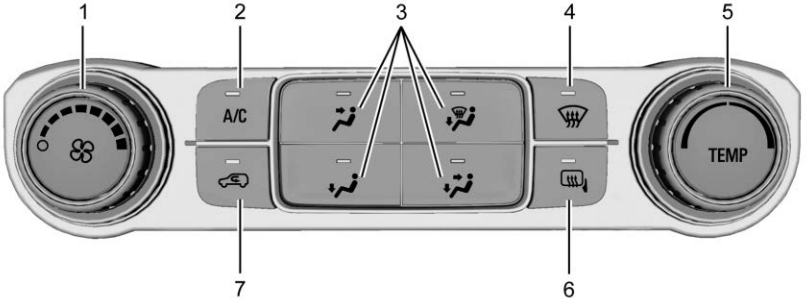

1. Fan Control
2. A/C (Air Conditioning)
3. Air Delivery Mode Controls
4. Defrost
5. TEMP (Temperature Control)
6. REAR (Rear Window Defogger, If Equipped)

   (Heated Outside Mirror, If Equipped)

   (Outside Air, If Equipped)
7. Air Recirculation

TEMP : Turn clockwise or counterclockwise to increase or decrease the temperature inside the vehicle.

: Turn clockwise or counterclockwise to increase or decrease the fan speed. Turn the knob all the way counterclockwise to turn the fan off.

Air Delivery Mode Controls : Press , , , or to change the direction of the airflow. An indicator light comes on in the selected mode button.

: Air is directed to the instrument panel outlets.

: Air is divided between the instrument panel and floor outlets.

: Air is directed to the floor outlets, with some air directed to the windshield and side window outlets.

: This mode clears the windows of fog or moisture. Air is directed to the windshield, floor outlets, and side window vents.

: Press to clear the windshield of fog or frost more quickly. Air is directed to the windshield and the side window vents. The system automatically forces outside air into the vehicle and the air conditioning compressor will run, unless the outside temperature is close to freezing.

Do not drive the vehicle until all the windows are clear.

See *Air Vents* ⇨ *187*.

: Press to turn on recirculation. An indicator light comes on. Air is recirculated to quickly cool the inside of the vehicle. It can also be used to help reduce outside air and odors that enter the vehicle.

: If equipped, press to turn the outside air mode on. An indicator light on the button comes on to show that outside air is on. When selected, air from outside the vehicle circulates throughout the vehicle. The recirculation mode cannot be used with the outside air mode.

A/C : Press to turn the air conditioning system on or off. An indicator light comes on to show that the air conditioning is enabled. If the fan is turned off, the air conditioner will not run. The A/C light will stay on even if the outside temperatures are below freezing.

Rear Window Defogger

REAR **:** If equipped, press to turn the rear window defogger on or off. An indicator light on the button comes on to show that the rear window defogger is on.

The rear window defogger only works when the ignition is on. The defogger turns off if the ignition is turned to ACC/ACCESSORY or off.

If equipped with heated outside mirrors, they turn on when the rear window defogger button is on. They help to clear fog or frost from the surface of the mirrors.

Caution
Using a razor blade or sharp object to clear the inside rear window can damage the rear window defogger. Repairs would not be covered by the vehicle warranty. Do not clear the inside rear window with sharp objects.

Air Vents

Use the sliding knobs on the center and side air vents to direct the airflow. Use the thumbwheels near the air vents to open or close off the airflow.

Air vents blow warm air on the side windows in cold weather. If Floor, Defog, or Defrost modes are selected, a small amount of air will come from the vents close to the window. If the airflow is shut off using the thumbwheels, warm air will be directed to the other instrument panel vents. This is normal operation.

Use the thumbwheels to turn vent airflow on or off based on the mode selected.

Operation Tips

- Clear away any ice, snow, or leaves from air inlets at the base of the windshield that could block the flow of air into the vehicle.

- Clear snow off the hood to improve visibility and help decrease moisture drawn into the vehicle.
- Keep the path under the front seats clear of objects to help circulate the air inside of the vehicle more effectively.
- Use of non-GM approved hood deflectors can adversely affect the performance of the system. Check with your dealer before adding equipment to the outside of the vehicle.

Maintenance

Passenger Compartment Air Filter

The filter reduces the dust, pollen, and other airborne irritants from outside air that is pulled into the vehicle.

The filter should be replaced as part of routine scheduled maintenance. See *Maintenance Schedule* ⇨ *354*. To find out what type of filter to use, see *Maintenance Replacement Parts* ⇨ *398*.

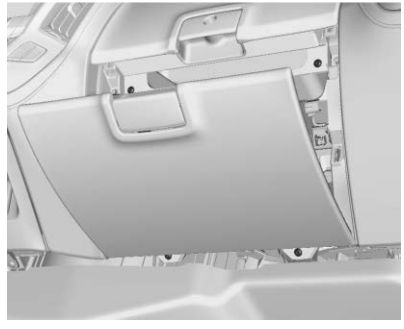

1. Open the lower glove box door completely.
2. Remove the four screws from around the lower glove box. The door does not need to be removed to access the screws.

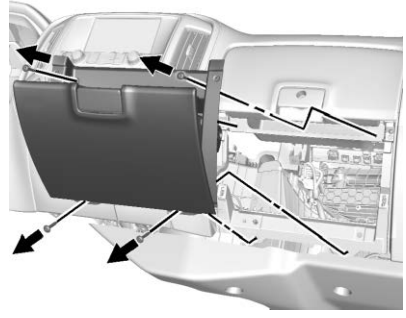

3. Close the lower glove box door and pull it from its frame to remove the entire unit.

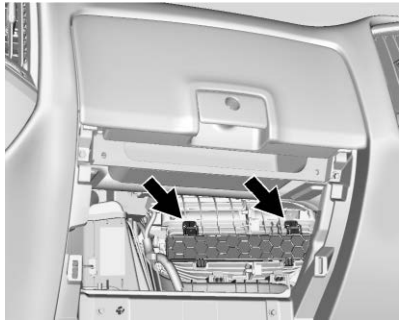

4. Release the two tabs holding the service door. Open the service door and remove the old filter.
5. Install the new air filter.
6. Close the service door and secure the tabs.
7. Reverse the steps to reinstall the glove box.

See your dealer if additional assistance is needed.

Service

All vehicles have a label underhood that identifies the refrigerant used in the vehicle. The refrigerant system should only be serviced by trained and certified technicians. The air conditioning evaporator should never be repaired or replaced by one from a salvage vehicle.
It should only be replaced by a new evaporator to ensure proper and safe operation.

During service, all refrigerants should be reclaimed with proper equipment. Venting refrigerants directly to the atmosphere is harmful to the environment and may also create unsafe conditions based on inhalation, combustion, frostbite, or other health-based concerns.

The air conditioning system requires periodic maintenance. See *Maintenance Schedule* ⇨ *354*.

Driving and Operating

Driving Information
Distracted Driving 191
Defensive Driving 192
Drunk Driving 192
Control of a Vehicle 192
Braking 192
Steering 193
Off-Road Recovery 193
Loss of Control 194
Off-Road Driving 194
Driving on Wet Roads 199
Hill and Mountain Roads 200
Winter Driving 200
If the Vehicle Is Stuck 202
Vehicle Load Limits 203

Starting and Operating
New Vehicle Break-In 205
Ignition Positions 206
Starting the Diesel Engine 208
Engine Heater 210
Retained Accessory Power (RAP) 211
Shifting Into Park 212
Shifting out of Park 213
Parking over Things That Burn 213

Engine Exhaust
Engine Exhaust 214
Running the Vehicle While Parked 214

Diesel Particulate Filter
Diesel Particulate Filter 215

Diesel Exhaust Fluid
Diesel Exhaust Fluid 218

Automatic Transmission
Automatic Transmission 221
Manual Mode 224
Tow/Haul Mode 225

Drive Systems
Four-Wheel Drive 226

Brakes
Antilock Brake System (ABS) 229
Parking Brake 231
Exhaust Brake 232

Ride Control Systems
Traction Control System (TCS) 233
Air Suspension 233

Cruise Control
Cruise Control 234

Driver Assistance Systems
Rear Vision Camera (RVC) . . . 237

Fuel
Top Tier Fuel 238
Fuel for Diesel Engines 238
Biodiesel 239
Cold Weather Operation 240
Water in Fuel 240
Running Out of Fuel 243
Fuel Filter Replacement 244
Filling the Tank 244
Filling a Portable Fuel Container 246

Trailer Towing
General Towing Information 247
Driving Characteristics and Towing Tips 247
Trailer Towing 250
Towing Equipment 254

Conversions and Add-Ons
Add-On Electrical Equipment 263
Adding a Snow Plow or Similar Equipment 263
Power Take-Off (PTO) 266

Driving Information

Distracted Driving

Distraction comes in many forms and can take your focus from the task of driving. Exercise good judgment and do not let other activities divert your attention away from the road. Many local governments have enacted laws regarding driver distraction. Become familiar with the local laws in your area.

To avoid distracted driving, keep your eyes on the road, keep your hands on the steering wheel, and focus your attention on driving.

- Do not use a phone in demanding driving situations. Use a hands-free method to place or receive necessary phone calls.
- Watch the road. Do not read, take notes, or look up information on phones or other electronic devices.
- Designate a front seat passenger to handle potential distractions.
- Become familiar with vehicle features before driving, such as programming favorite radio stations and adjusting climate control and seat settings. Program all trip information into any navigation device prior to driving.
- Wait until the vehicle is parked to retrieve items that have fallen to the floor.
- Stop or park the vehicle to tend to children.
- Keep pets in an appropriate carrier or restraint.
- Avoid stressful conversations while driving, whether with a passenger or on a cell phone.

⚠ Warning

Taking your eyes off the road too long or too often could cause a crash resulting in injury or death. Focus your attention on driving.

Refer to the infotainment section and/or infotainment manual on using that system and the navigation system, if equipped, including pairing and using a cell phone.

Defensive Driving

Defensive driving means “always expect the unexpected.” The first step in driving defensively is to wear the seat belt. See *Seat Belts* ⇨ *52*.

- Assume that other road users (pedestrians, bicyclists, and other drivers) are going to be careless and make mistakes. Anticipate what they might do and be ready.
- Allow enough following distance between you and the driver in front of you.
- Focus on the task of driving.

Drunk Driving

Death and injury associated with drinking and driving is a global tragedy.

⚠ Warning

Drinking and then driving is very dangerous. Your reflexes, perceptions, attentiveness, and judgment can be affected by even a small amount of alcohol. You can have a serious — or even fatal — collision if you drive after drinking.

Do not drink and drive or ride with a driver who has been drinking. Ride home in a cab; or if you are with a group, designate a driver who will not drink.

Control of a Vehicle

Braking, steering, and accelerating are important factors in helping to control a vehicle while driving.

Braking

Braking action involves perception time and reaction time. Deciding to push the brake pedal is perception time. Actually doing it is reaction time.

Average driver reaction time is about three-quarters of a second. In that time, a vehicle moving at 100 km/h (60 mph) travels 20 m (66 ft), which could be a lot of distance in an emergency.

Helpful braking tips to keep in mind include:

- Keep enough distance between you and the vehicle in front of you.
- Avoid needless heavy braking.
- Keep pace with traffic.

If the engine ever stops while the vehicle is being driven, brake normally but do not pump the brakes. Doing so could make the pedal harder to push down. If the engine stops, there will be some power brake assist but it will be used when the brake is applied.

Once the power assist is used up, it can take longer to stop and the brake pedal will be harder to push.

Steering

The power steering system may require maintenance. See *Power Steering Fluid* ⇨ *302*.

If power steering assist is lost because the engine stops or the system malfunctions, the vehicle can be steered but may require increased effort. See your dealer.

Caution

If the steering wheel is turned until it reaches the end of its travel, and is held in that position for more than 15 seconds, damage may occur to the power steering system and there may be loss of power steering assist.

Curve Tips

- Take curves at a reasonable speed.
- Reduce speed before entering a curve.
- Maintain a reasonable steady speed through the curve.
- Wait until the vehicle is out of the curve before accelerating gently into the straightaway.

Steering in Emergencies

- There are some situations when steering around a problem may be more effective than braking.
- Holding both sides of the steering wheel allows you to turn 180 degrees without removing a hand.
- Antilock Brake System (ABS) allows steering while braking.

Off-Road Recovery

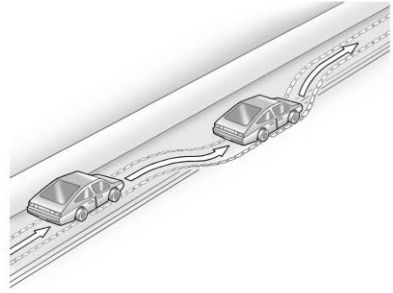

The vehicle's right wheels can drop off the edge of a road onto the shoulder while driving. Follow these tips:

1. Ease off the accelerator and then, if there is nothing in the way, steer the vehicle so that it straddles the edge of the pavement.
2. Turn the steering wheel about one-eighth of a turn, until the right front tire contacts the pavement edge.

3. Turn the steering wheel to go straight down the roadway.

Loss of Control

Skidding

There are three types of skids that correspond to the vehicle's three control systems:

- Braking Skid — wheels are not rolling.
- Steering or Cornering Skid — too much speed or steering in a curve causes tires to slip and lose cornering force.
- Acceleration Skid — too much throttle causes the driving wheels to spin.

Defensive drivers avoid most skids by taking reasonable care suited to existing conditions, and by not overdriving those conditions. But skids are always possible.

If the vehicle starts to slide, follow these suggestions:

- Ease your foot off the accelerator pedal and steer the way you want the vehicle to go. The vehicle may straighten out. Be ready for a second skid if it occurs.
- Slow down and adjust your driving according to weather conditions. Stopping distance can be longer and vehicle control can be affected when traction is reduced by water, snow, ice, gravel, or other material on the road. Learn to recognize warning clues — such as enough water, ice, or packed snow on the road to make a mirrored surface — and slow down when you have any doubt.
- Try to avoid sudden steering, acceleration, or braking, including reducing vehicle speed by shifting to a lower gear. Any sudden changes could cause the tires to slide.

Remember: Antilock brakes help avoid only the braking skid.

Off-Road Driving

Four-wheel-drive vehicles can be used for off-road driving. Vehicles without four-wheel drive and vehicles not equipped with All Terrain (AT) or On-Off Road (OOR) tires must not be driven off-road except on a level, solid surface. For contact information about the original equipment tires, see the warranty manual.

One of the best ways for successful off-road driving is to control the speed.

⚠ Warning

When driving off-road, bouncing and quick changes in direction can easily throw you out of position. This could cause you to lose control and crash. You and your passengers should always wear seat belts.

Before Driving Off-Road

- Have all necessary maintenance and service work completed.
- Fuel the vehicle, fill fluid levels, and check inflation pressure in all tires, including the spare, if equipped.
- Read all the information about four-wheel-drive vehicles in this manual.
- Know the local laws that apply to off-road driving.

To gain more ground clearance if needed, it may be necessary to remove the front fascia lower air dam, if equipped. However, driving without the air dam reduces fuel economy.

Caution

Operating the vehicle for extended periods without the front fascia lower air dam installed can cause improper airflow to the engine. Reattach the front fascia air dam after off-road driving.

Loading the Vehicle for Off-Road Driving

⚠ Warning

- Unsecured cargo on the load floor can be tossed about when driving over rough terrain. You or your passengers can be struck by flying objects. Secure the cargo properly.
- Keep cargo in the cargo area as far forward and as low as possible. The heaviest things should be on the floor, forward of the rear axle.
- Heavy loads on the roof raise the vehicle's center of gravity, making it more likely to roll over. You can be seriously or fatally injured if the vehicle rolls over. Put heavy loads inside the cargo area, not on the roof.

For more information about loading the vehicle, see *Vehicle Load Limits* ⇨ *203* and *Tires* ⇨ *325*.

Environmental Concerns

- Always use established trails, roads, and areas that have been set aside for public off-road recreational driving and obey all posted regulations.
- Do not damage shrubs, flowers, trees, or grasses or disturb wildlife.
- Do not park over things that burn. See *Parking over Things That Burn* ⇨ *213*.

Driving on Hills

Driving safely on hills requires good judgment and an understanding of what the vehicle can and cannot do.

⚠ Warning

Many hills are simply too steep for any vehicle. Driving up hills can cause the vehicle to stall.

(Continued)

Warning (Continued)

Driving down hills can cause loss of control. Driving across hills can cause a rollover. You could be injured or killed. Do not drive on steep hills.

Before driving on a hill, assess the steepness, traction, and obstructions. If the terrain ahead cannot be seen, get out of the vehicle and walk the hill before driving further.

When driving on hills:

- Use a low gear and keep a firm grip on the steering wheel.
- Maintain a slow speed.
- When possible, drive straight up or down the hill.
- Slow down when approaching the top of the hill.
- Use headlamps even during the day to make the vehicle more visible.

⚠ Warning

Driving to the top of a hill at high speed can cause a crash. There could be a drop-off, embankment, cliff, or even another vehicle. You could be seriously injured or killed. As you near the top of a hill, slow down and stay alert.

- Never go downhill forward or backward with either the transmission or transfer case in N (Neutral). The brakes could overheat and you could lose control.

⚠ Warning

If the vehicle has the two-speed electronic transfer case, shifting the transfer case to N (Neutral) can cause your vehicle to roll even if the transmission is in P (Park). This is because the N (Neutral) position on the

(Continued)

Warning (Continued)

transfer case overrides the transmission. You or someone else could be injured. If leaving the vehicle, set the parking brake and shift the transmission to P (Park). Shift the transfer case to any position but N (Neutral).

- When driving down a hill, keep the vehicle headed straight down. Use a low gear because the engine will work with the brakes to slow the vehicle and help keep the vehicle under control.

⚠ Warning

Heavy braking when going down a hill can cause your brakes to overheat and fade. This could cause loss of control and you or others could be injured or killed. Apply the brakes lightly when

(Continued)

Warning (Continued)

descending a hill and use a low gear to keep vehicle speed under control.

If the vehicle stalls on a hill:

1. Apply the brakes to stop the vehicle, and then apply the parking brake.
2. Shift into P (Park) and then restart the engine.
   - If driving uphill when the vehicle stalls, shift to R (Reverse), release the parking brake, and back straight down.
   - Never try to turn the vehicle around. If the hill is steep enough to stall the vehicle, it is steep enough to cause it to roll over.
   - If you cannot make it up the hill, back straight down the hill.
   - Never back down a hill in N (Neutral) using only the brake. The vehicle can roll backward quickly and you could lose control.
   - If driving downhill when the vehicle stalls, shift to a lower gear, release the parking brake, and drive straight down the hill.
3. If the vehicle cannot be restarted after stalling, set the parking brake, shift into P (Park), and turn the vehicle off. Block the wheels with chocks for added safety when parking on a grade.
   3.1. Leave the vehicle and seek help.
   3.2. Stay clear of the path the vehicle would take if it rolled downhill.

- Avoid turns that take the vehicle across the incline of the hill. A hill that can be driven straight up or down might be too steep to drive across. Driving across an incline puts more weight on the downhill wheels, which could cause a downhill slide or a rollover.
- Surface conditions can be a problem. Loose gravel, muddy spots, or even wet grass can cause the tires to slip sideways, downhill. If the vehicle slips sideways, it can hit something that will trip it — a rock, a rut, etc. — and roll over.
- Hidden obstacles can make the steepness of the incline more severe. If a rock is driven across with the uphill wheels, or if the downhill wheels drop into a rut or depression, the vehicle can tilt even more.
- If an incline must be driven across, and the vehicle starts to slide, turn downhill. This should help straighten out the vehicle and prevent the side slipping.

⚠ Warning

Getting out of the vehicle on the downhill side when stopped across an incline is dangerous. If the vehicle rolls over, you could be crushed or killed. Always get out on the uphill side of the vehicle and stay well clear of the rollover path.

Parking on a Hill

Parking on a hill or steep grade is not advised. See “Parking on Hills” in *Driving Characteristics and Towing Tips* ⇨ *247* for more detailed information.

If parking on a hill or steep grade:

1. Press the brake pedal to stop the vehicle, and then apply the parking brake.
2. Shift into P (Park), and then turn the vehicle off.
3. Block the wheels with chocks.

Driving in Mud, Sand, Snow, or Ice

Use a low gear when driving in mud — the deeper the mud, the lower the gear. Keep the vehicle moving to avoid getting stuck.

Traction changes when driving on sand. On loose sand, such as on beaches or sand dunes, the tires tend to sink into the sand. This affects steering, accelerating, and braking. Drive at a reduced speed and avoid sharp turns or abrupt maneuvers.

Traction is reduced on hard packed snow and ice and it is easy to lose control. Reduce vehicle speed when driving on hard packed snow and ice.

⚠ Warning

Driving on frozen lakes, ponds, or rivers can be dangerous. Ice conditions vary greatly and the vehicle could fall through the ice;

(Continued)

Warning (Continued)

you and your passengers could drown. Drive your vehicle on safe surfaces only.

Driving in Water

⚠ Warning

Driving through rushing water can be dangerous. Deep water can sweep your vehicle downstream and you and your passengers could drown. If it is only shallow water, it can still wash away the ground from under your tires. Traction could be lost, and the vehicle could roll over. Do not drive through rushing water.

Caution

Do not drive through standing water if it is deep enough to cover the wheel hubs, axles, or exhaust pipe. Deep water can damage the axle and other vehicle parts.

If the standing water is not too deep, drive through it slowly. At faster speeds, water can get into the engine and cause it to stall. Stalling can occur if the exhaust pipe is under water. Do not turn off the ignition when driving through water. If the exhaust pipe is under water, the engine will not start. When going through water, the brakes get wet and it may take longer to stop. See "Driving on Wet Roads" later in this section.

After Off-Road Driving

Remove any brush or debris that has collected on the underbody or chassis, or under the hood. These accumulations can be a fire hazard.

After operation in mud or sand, have the brake linings cleaned and checked. These substances can cause glazing and uneven braking. Check the body structure, driveline, steering, suspension, wheels, tires, and exhaust system for damage and check the fuel lines and cooling system for any leakage.

More frequent maintenance service is required. See *Maintenance Schedule* ⇨ *354*.

Driving on Wet Roads

Rain and wet roads can reduce vehicle traction and affect your ability to stop and accelerate. Always drive slower in these types of driving conditions and avoid driving through large puddles and deep-standing or flowing water.

⚠ Warning

Wet brakes can cause crashes. They might not work as well in a quick stop and could cause pulling to one side. You could lose control of the vehicle.

After driving through a large puddle of water or a car/vehicle wash, lightly apply the brake pedal until the brakes work normally.

Flowing or rushing water creates strong forces. Driving through flowing water could cause the vehicle to be carried away. If this happens, you and other vehicle occupants could drown. Do not ignore police warnings and be very cautious about trying to drive through flowing water.

Hydroplaning

Hydroplaning is dangerous. Water can build up under the vehicle's tires so they actually ride on the water. This can happen if the road is

wet enough and you are going fast enough. When the vehicle is hydroplaning, it has little or no contact with the road.

There is no hard and fast rule about hydroplaning. The best advice is to slow down when the road is wet.

Other Rainy Weather Tips

Besides slowing down, other wet weather driving tips include:

- Allow extra following distance.
- Pass with caution.
- Keep windshield wiping equipment in good shape.
- Keep the windshield washer fluid reservoir filled.
- Have good tires with proper tread depth. See *Tires* ⇨ *325*.
- Turn off cruise control.

Hill and Mountain Roads

Driving on steep hills or through mountains is different than driving on flat or rolling terrain. Tips include:

- Keep the vehicle serviced and in good shape.
- Check all fluid levels and brakes, tires, cooling system, and transmission.
- Shift to a lower gear when going down steep or long hills.

⚠ Warning

Using the brakes to slow the vehicle on a long downhill slope can cause brake overheating, can reduce brake performance, and could result in a loss of braking. Shift the transmission to a lower gear to let the engine assist the brakes on a steep downhill slope.

⚠ Warning

Coasting downhill in N (Neutral) or with the ignition off is dangerous. This can cause overheating of the brakes and

(Continued)

Warning (Continued)

loss of steering assist. Always have the engine running and the vehicle in gear.

- Drive at speeds that keep the vehicle in its own lane. Do not swing wide or cross the center line.
- Be alert on top of hills; something could be in your lane (e.g., stalled car, crash).
- Pay attention to special road signs (e.g., falling rocks area, winding roads, long grades, passing or no-passing zones) and take appropriate action.

Winter Driving

Driving on Snow or Ice

Snow or ice between the tires and the road creates less traction or grip, so drive carefully. Wet ice can occur at about 0 °C (32 °F) when

freezing rain begins to fall. Avoid driving on wet ice or in freezing rain until roads can be treated.

For Slippery Road Driving:

- Accelerate gently. Accelerating too quickly causes the wheels to spin and makes the surface under the tires slick.
- The Antilock Brake System (ABS) improves vehicle stability during hard stops, but the brakes should be applied sooner than when on dry pavement. See *Antilock Brake System (ABS)* ⇨ *229*.
- Allow greater following distance and watch for slippery spots. Icy patches can occur on otherwise clear roads in shaded areas. The surface of a curve or an overpass can remain icy when the surrounding roads are clear. Avoid sudden steering maneuvers and braking while on ice.
- Turn off cruise control.

Blizzard Conditions

Stop the vehicle in a safe place and signal for help. Stay with the vehicle unless there is help nearby.
If possible, use Roadside Assistance. See *Roadside Assistance Program* ⇨ *411*. To get help and keep everyone in the vehicle safe:

- Turn on the hazard warning flashers.
- Tie a red cloth to an outside mirror.

⚠ Warning

Snow can trap engine exhaust under the vehicle. This may cause exhaust gases to get inside. Engine exhaust contains carbon monoxide (CO), which cannot be seen or smelled. It can cause unconsciousness and even death.

If the vehicle is stuck in snow:

(Continued)

Warning (Continued)

- Clear snow from the base of the vehicle, especially any blocking the exhaust pipe.
- Open a window about 5 cm (2 in) on the vehicle side that is away from the wind, to bring in fresh air.
- Fully open the air outlets on or under the instrument panel.
- Adjust the climate control system to circulate the air inside the vehicle and set the fan speed to the highest setting. See “Climate Control Systems.”

For more information about CO, see *Engine Exhaust* ⇨ *214*.

To save fuel, run the engine for short periods to warm the vehicle and then shut the engine off and partially close the window. Moving about to keep warm also helps.

If it takes time for help to arrive, when running the engine, push the accelerator pedal slightly so the engine runs faster than the idle speed. This keeps the battery charged to restart the vehicle and to signal for help with the headlamps. Do this as little as possible, to save fuel.

If the Vehicle Is Stuck

Slowly and cautiously spin the wheels to free the vehicle when stuck in sand, mud, ice, or snow. See “Rocking the Vehicle to Get It Out” later in this section.

The Traction Control System can often help to free a stuck vehicle. See *Traction Control System (TCS)* ⇨ *233*. If TCS cannot free the vehicle, see “Rocking the Vehicle to Get it Out” following.

⚠ Warning

If the vehicle's tires spin at high speed, they can explode, and you or others could be injured. The vehicle can overheat, causing an engine compartment fire or other damage. Spin the wheels as little as possible and avoid going above 56 km/h (35 mph).

For information about using tire chains on the vehicle, see *Tire Chains* ⇨ *335*.

Rocking the Vehicle to Get It Out

Turn the steering wheel left and right to clear the area around the front wheels. For four-wheel-drive vehicles, shift into Four-Wheel Drive High. Turn the TCS off. Shift back and forth between R (Reverse) and a forward gear, spinning the wheels as little as possible. To prevent transmission wear, wait until the wheels stop spinning before shifting gears. Slowly spinning the wheels in the forward and reverse directions causes a rocking motion that could free the vehicle. If that does not get the vehicle out after a few tries, it might need to be towed out. See *Towing the Vehicle* ⇨ *339*. Recovery hooks can be used, if the vehicle has them.

Recovery Hooks

⚠ Warning

Never pull on recovery hooks from the side. The hooks could break and you and others could be injured. When using recovery hooks, always pull the vehicle from the front.

Caution

Never use recovery hooks to tow the vehicle. The vehicle could be damaged, and the repairs would not be covered by the vehicle warranty.

There are recovery hooks at the front of the vehicle. Use them if the vehicle is stuck off-road and needs to be pulled some place to continue driving.

Vehicle Load Limits

It is very important to know how much weight the vehicle can carry. This weight is called the vehicle capacity weight and includes the weight of all occupants, cargo, and all nonfactory-installed options.

⚠ Warning

Do not load the vehicle any heavier than the Gross Vehicle Weight Rating (GVWR), or either the maximum front or rear Gross Axle Weight Rating (GAWR). This can cause systems to break and change the way the vehicle handles. This could cause loss of control and a crash. Overloading can also reduce stopping distance, damage the tires, and shorten the life of the vehicle.

Certification/Tire Label

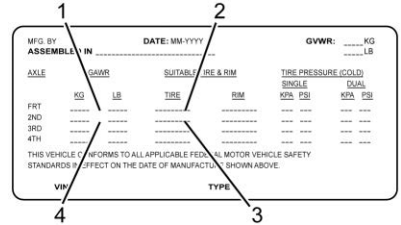

Label Example

1. Gross Weight Rating of the Front Axle
2. Tire Size for Front Axle
3. Tire Size for Rear Axle
4. Gross Weight Rating of the Rear Axle

A vehicle-specific Certification/Tire label may be attached to the driver-side door frame. The label may show the size of the vehicle's original tires and the inflation pressures needed to obtain the gross weight capacity of the vehicle. This is called Gross Vehicle Weight

Rating (GVWR). The GVWR includes the weight of the vehicle, all occupants, fuel, and cargo.

The Certification/Tire label also may show the maximum weights for the front and rear axles, called Gross Axle Weight Rating (GAWR). To determine the actual loads on the front and rear axles, weigh the vehicle at a weigh station. Your dealer can help with this. Be sure to spread the load equally on both sides of the centerline.

Caution

Overloading the vehicle may cause damage. Repairs would not be covered by the vehicle warranty. Do not overload the vehicle.

Using heavier suspension components to get added durability might not change the weight ratings. Ask your dealer to help load the vehicle the right way.

⚠ Warning

Things you put inside the vehicle can strike and injure people in a sudden stop or turn, or in a crash.

- Put things in the cargo area of the vehicle. Try to spread the weight evenly.
- Never stack heavier things, like suitcases, inside the vehicle so that some of them are above the tops of the seats.
- Do not leave an unsecured child restraint in the vehicle.

(Continued)

Warning (Continued)

- When you carry something inside the vehicle, secure it whenever you can.
- Do not leave a seat folded down unless you need to.

Add-On Equipment

When carrying removable items, a limit on how many people carried inside the vehicle may be necessary. Be sure to weigh the vehicle before buying and installing the new equipment.

Caution

Overloading the vehicle may cause damage. Repairs would not be covered by the vehicle warranty. Do not overload the vehicle.

Remember not to exceed the Gross Axle Weight Rating (GAWR) of the front or rear axle.

Starting and Operating

New Vehicle Break-In

Caution

The vehicle does not need an elaborate break-in. But it will perform better in the long run if you follow these guidelines:

- Keep the vehicle speed at 88 km/h (55 mph) or less for the first 805 km (500 mi).
- Do not drive at any one constant speed, fast or slow, for the first 805 km (500 mi). Do not make full-throttle starts. Avoid downshifting to brake or slow the vehicle.
- Avoid making hard stops for the first 322 km (200 mi) or so. During this time the new brake linings are not yet broken in. Hard stops with new linings can mean

(Continued)

Caution (Continued)

premature wear and earlier replacement. Follow this breaking-in guideline every time you get new brake linings.

- Do not tow a trailer during break-in. See *Trailer Towing* ⇨ *250* for the trailer towing capabilities of the vehicle and more information.

Following break-in, engine speed and load can be gradually increased.

Ignition Positions

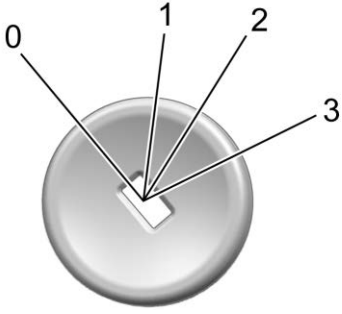

0. Stopping the Engine/LOCK/OFF
1. ACC/ACCESSORY
2. ON/RUN
3. START

The ignition switch has four positions.

To shift out of P (Park), the ignition must be in ON/RUN and the brake pedal must be applied.

0 (Stopping the Engine/LOCK/OFF) : This position turns off the vehicle. It also locks the ignition, the transmission, and the steering column, if equipped with a locking steering column.

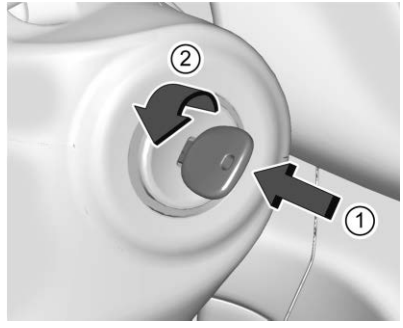

To turn off the vehicle:

1. Make sure that the vehicle is stopped.
2. Shift to P (Park).
3. Continue to hold the brake pedal, then set the parking brake. See *Parking Brake* ⇨ *231*.
4. Push the key all the way in the steering column (1), then turn the key to LOCK/OFF (2).
5. Remove the key.
6. Release the brake pedal.

See your dealer if the key can be removed in any other position.

Retained Accessory Power (RAP) will remain active. See *Retained Accessory Power (RAP)* ⇨ *211*.

A warning chime will sound when the driver door is opened and the key is in the ignition.

If equipped with a locking steering column, the steering can bind with the front wheels turned off center, which may prevent key rotation out of LOCK/OFF. If this happens, move the steering wheel from right to left while turning the key to ACC/ACCESSORY. If this does not work, then the vehicle needs service.

⚠ Warning

Turning off the vehicle while moving may cause loss of power assist in the brake and steering systems and disable the airbags. While driving, turn off the vehicle only in an emergency.

In an emergency, if the vehicle cannot be pulled over and must be turned off while driving:

1. Push the key all the way in toward the steering column, then turn the key to ACC/ ACCESSORY.
2. Brake using firm and steady pressure. Do not pump the brakes repeatedly. This may deplete power assist, requiring increased brake pedal force.
3. Shift the vehicle to N (Neutral). This can be done while the vehicle is moving. Continue braking and steer the vehicle to a safe location.
4. Come to a complete stop.
5. Shift to P (Park) with an automatic transmission, or Neutral with a manual transmission.
6. Continue to hold the brake pedal, then set the parking brake. See *Parking Brake* ⇨ *231*.
7. Push the key all the way in toward the steering column, then turn the ignition to LOCK/OFF.
8. Remove the key.
9. Release the brake pedal.

Caution

Use the correct key, make sure it is all the way in — or pushed all the way in toward the steering column when turning off the vehicle — and turn it only with your hand.

1 (ACC/ACCESSORY) : This position allows features such as the infotainment system to operate while the vehicle is off. It also unlocks the steering column, if equipped with a locking steering column. Use this position if the vehicle must be pushed or towed. See *Retained Accessory Power (RAP)* ⇨ *211*.

From ON/RUN, push the key all the way in toward the steering column, then turn the key to ACC/ ACCESSORY.

If the key is left in ACC/ ACCESSORY with the engine off, the battery could drain and the vehicle may not start.

A warning chime will sound when the driver door is opened and the key is in the ignition.

2 (ON/RUN) : This position can be used to operate the electrical accessories and to display some instrument cluster warning and indicator lights. This position can also be used for service and diagnostics, and to verify the proper operation of the malfunction indicator lamp as may be required for emission inspection purposes.

The switch stays in this position when the engine is running. The transmission is also unlocked in this position.

If the key is left in ON/RUN with the engine off, the battery could drain and the vehicle may not start.

3 (START) : This is the position that starts the engine. When the engine starts, release the key. The ignition returns to ON/RUN for driving.

Starting the Diesel Engine

The diesel engine starts differently than a gasoline engine.

Caution
If the steering wheel is turned until it reaches the end of its travel, and is held in that position while starting the vehicle, damage may occur to the hydraulic power steering system and there may be loss of power steering assist.

Move the shift lever to P (Park) or N (Neutral). To restart the engine when the vehicle is already moving, use N (Neutral) only.

Caution
Do not try to shift to P (Park) if the vehicle is moving. If you do, you could damage the transmission. Shift to P (Park) only when the vehicle is stopped.

Starting the Engine

1. Turn the ignition key to ON/RUN.

   Observe the wait-to-start light. See *Wait-to-Start Light* ⇨ *115*. This light may not come on if the engine is warm.

2. If the wait-to-start light is on, wait until this light goes off. Turn the ignition key to START, then release the ignition key. The engine will continue to crank until the engine starts.

   The engine has a fast warm-up glow plug system. The wait-to-start light will illuminate for a much shorter time than most diesel engines, due to the rapid heating of the glow plug system.

Caution
If the wait-to-start light stays on after starting the vehicle, the vehicle may not run properly. Have the vehicle serviced right away.

3. If the engine does not start after 15 seconds of cranking, turn the ignition off. Wait one minute for the cranking motor to cool, then try the same steps again.

If you are trying to start the engine after you have run out of fuel, follow the steps in *Running Out of Fuel* ⇨ *243*.

When the engine is cold, let it run for a few minutes before driving. This lets oil pressure build up. The engine will sound louder when it is cold.

For turbo protection, engine power at speeds above idle may be limited if the engine is cold. This protection can last up to a maximum of 40 seconds at extreme cold coolant and ambient temperatures.

Cold Weather Starting

Use the recommended engine oil when the outside temperature drops below freezing. See *Engine Oil* ⇨ *291*. When the outside temperature drops below –18 °C (0 °F), use of the engine coolant heater is recommended.

If you experience longer cranking times, notice an unusual amount of exhaust smoke, or are at higher elevations (over 2 135 m or 7,000 ft), you may use the engine coolant heater. See *Engine Heater* ⇨ *210*.

See *Fuel for Diesel Engines* ⇨ *238* for information on what fuel to use in cold weather.

If the Diesel Engine Will Not Start

If the vehicle runs out of fuel, see *Running Out of Fuel* ⇨ *243*.

If the vehicle is not out of fuel, and the engine will not start:

Turn the ignition key to ON/RUN. After the wait-to-start light goes off, turn the ignition key to START.

If the light does not go off, wait a few seconds, then try starting the engine again. See your dealer as soon as possible for a starting system check.

If the light comes on and then goes off and you know the batteries are charged, but the engine still will not start, the vehicle needs service.

If the light does not come on when the engine is cold, the vehicle needs service.

If the batteries do not have enough charge to start the engine, see *Battery - North America* ⇨ *308*.

Check that the correct engine oil has been used and changed at appropriate intervals. If the wrong oil is used, the engine may be harder to start.

Be sure to use the proper fuel for existing weather conditions. See *Fuel for Diesel Engines* ⇨ *238*.

If the engine starts, runs a short time, then stops, the vehicle needs service.

⚠ Warning

Do not use gasoline or starting aids, such as ether, in the air intake. They could damage the engine, which may not be covered by the vehicle warranty. They could also cause a fire, which could cause serious personal injury.

Engine Idle Variations

Under certain conditions the engine idle speed can vary or be elevated. Change in idle speed is normal and does not indicate a problem. Normal

conditions that can raise idle speed are low voltage, DPF regeneration, air conditioning compressor loads, and engine warmup. These speeds can range from approximately 600 to 1000 rpm.

Elevated Idle

The engine has a cold temperature high idle feature which elevates the engine idle speed from base idle to 1050 to 1100 rpm when outside temperatures are below 0 °C (32 °F), and the engine coolant temperature is below 65 °C (150 °F). This feature enhances heater performance by raising the engine coolant temperature faster.

When the engine is started, it will slowly ramp up to the high idle speed after a delay of a few seconds up to approximately two minutes. For this method to work properly there must be no throttle or brake pedal faults.

The engine idle speed will return to normal once the following conditions are met:

- Engine coolant temperature reaches 65 °C (150 °F)
- Air intake temperature reaches 0 °C (32 °F)

The high idle speed will be temporarily interrupted and the engine speed will return to normal if any of the following conditions occur:

- The brake pedal is applied.
- The accelerator pedal is pressed.
- The transmission is shifted out of P (Park) or N (Neutral).
- Vehicle speed is detected.

Once these inputs are removed, the engine idle speed will slowly ramp back up to high idle after the normal delay, if the conditions for engine coolant temperature and air intake temperature are still met.

Engine Heater

The engine heater can provide easier starting and better fuel economy during engine warm-up in cold weather conditions at or below −18 °C (0 °F). Vehicles with an engine heater should be plugged in at least four hours before starting. An internal thermostat in the plug-end of the cord may exist, which will prevent engine heater operation at temperatures above −18 °C (0 °F).

⚠ Warning

Do not plug in the engine block heater while the vehicle is parked in a garage or under a carport. Property damage or personal injury may result. Always park the vehicle in a clear open area away from buildings or structures.

To Use the Engine Heater

1. Turn off the engine.

   Check the heater cord for damage. If it is damaged, do not use it. See your dealer for a replacement. Inspect the cord for damage yearly.

2. Plug the cord into a normal, grounded 110-volt AC outlet.

⚠ Warning

Improper use of the heater cord or an extension cord can damage the cord and may result in overheating and fire.

- Plug the cord into a three-prong electrical utility receptacle that is protected by a ground fault detection function. An ungrounded outlet could cause an electric shock.
- Use a weatherproof, heavy-duty, 15 amp-rated extension cord if needed.

(Continued)

Warning (Continued)

Failure to use the recommended extension cord in good operating condition, or using a damaged heater or extension cord, could make it overheat and cause a fire, property damage, electric shock, and injury.

- Do not operate the vehicle with the heater cord permanently attached to the vehicle. Possible heater cord and thermostat damage could occur.
- While in use, do not let the heater cord touch vehicle parts or sharp edges. Never close the hood on the heater cord.
- Before starting the vehicle, unplug the cord, reattach the cover to the plug, and securely fasten the cord. Keep the cord away from any moving parts.

3. Before starting the engine, be sure to unplug and store the cord as it was before to keep it away from moving parts. If you do not, it could be engine damaged.

The length of time the heater should remain plugged in depends on several factors. Ask a dealer in the area where you will be parking the vehicle for the best advice on this.

Retained Accessory Power (RAP)

Some vehicle accessories may be used after the ignition is turned off.

The power windows and sunroof, if equipped, will continue to work for up to 10 minutes or until any door is opened.

The infotainment system will continue to work for 10 minutes, until the driver door is opened, or until the ignition is turned on or placed in ACC/ACCESSORY.

Shifting Into Park

⚠ Warning

It can be dangerous to get out of the vehicle if the automatic transmission shift lever is not fully in P (Park) with the parking brake firmly set. The vehicle can roll. Do not leave the vehicle when the engine is running unless you have to. If you have left the engine running, the vehicle can move suddenly. You or others could be injured. To be sure the vehicle will not move, even when you are on fairly level ground, always set the parking brake and move the shift lever to P (Park).

1. Hold the brake pedal down, then set the parking brake. See *Parking Brake* ⇨ *231*.
2. Move the shift lever into the P (Park) position by pulling the shift lever toward you and moving it up as far as it will go.
3. Push the ignition key in, towards the steering column and then turn the ignition off.
4. Remove the key and take it with you. If you can leave the vehicle with the ignition key in your hand, the vehicle is in P (Park).

Leaving the Vehicle with the Engine Running

⚠ Warning

It can be dangerous to get out of the vehicle if the automatic transmission shift lever is not fully in P (Park) with the parking brake firmly set. The vehicle can roll. Do not leave the vehicle when the engine is running unless you have to. If you have left the engine running, the vehicle can move suddenly. You or others could be injured. To be sure the vehicle will not move, even when

(Continued)

Warning (Continued)

you are on fairly level ground, always set the parking brake and move the shift lever to P (Park).

If you have to leave the vehicle with the engine running, be sure the vehicle is in P (Park) and the parking brake is firmly set before you leave it. After you move the shift lever into P (Park), hold the regular brake pedal down. Then, see if you can move the shift lever away from P (Park) without first pulling it toward you. If you can, it means that the shift lever was not fully locked into P (Park).

Torque Lock

If you are parking on a hill and you do not shift the transmission into P (Park) properly, the weight of the vehicle may put too much force on the parking pawl in the transmission. You may find it difficult to pull the shift lever out of P (Park). This is called torque lock. To prevent torque lock, set the parking

brake and then shift into P (Park) properly before you leave the driver seat.

When you are ready to drive, move the shift lever out of P (Park) before you release the parking brake.

If torque lock does occur, you may need to have another vehicle push yours a little uphill to take some of the pressure from the parking pawl in the transmission. You will then be able to pull the shift lever out of P (Park).

Shifting out of Park

This vehicle is equipped with an electronic shift lock release system. The shift lock release system is designed to prevent movement of the shift lever out of P (Park), unless the ignition is on and the brake pedal is applied.

The shift lock release is always functional except in the case of an uncharged or low voltage (less than 9 volt) battery.

If the vehicle has an uncharged battery or a battery with low voltage, try charging or jump starting the battery. See *Jump Starting - North America* ⇨ *336*.

To shift out of P (Park):

1. Apply the brake pedal.
2. Move the shift lever to the desired position.

If you still are unable to shift out of P (Park):

1. Ease the pressure on the shift lever.
2. While holding down the brake pedal, push the shift lever all the way into P (Park).
3. Move the shift lever to the desired position.

If you are still having a problem shifting, then have the vehicle serviced soon.

Parking over Things That Burn

⚠ Warning

Things that can burn could touch hot exhaust parts under the vehicle and ignite. Do not park over papers, leaves, dry grass, or other things that can burn.

Engine Exhaust

⚠ Warning

Engine exhaust contains carbon monoxide (CO), which cannot be seen or smelled. Exposure to CO can cause unconsciousness and even death.

Exhaust may enter the vehicle if:

- The vehicle idles in areas with poor ventilation (parking garages, tunnels, deep snow that may block underbody airflow or tail pipes).
- The exhaust smells or sounds strange or different.
- The exhaust system leaks due to corrosion or damage.
- The vehicle exhaust system has been modified, damaged, or improperly repaired.

(Continued)

Warning (Continued)

- There are holes or openings in the vehicle body from damage or aftermarket modifications that are not completely sealed.

If unusual fumes are detected or if it is suspected that exhaust is coming into the vehicle:

- Drive it only with the windows completely down.
- Have the vehicle repaired immediately.

Never park the vehicle with the engine running in an enclosed area such as a garage or a building that has no fresh air ventilation.

Running the Vehicle While Parked

It is better not to park with the engine running.

If the vehicle is left with the engine running, follow the proper steps to be sure the vehicle will not move. See *Shifting Into Park* ⇨ *212* and *Engine Exhaust* ⇨ *214*.

If parking on a hill and pulling a trailer, see *Driving Characteristics and Towing Tips* ⇨ *247*.

Diesel Particulate Filter

The vehicle has a Diesel Particulate Filter (DPF) as part of the exhaust system to reduce vehicle emissions. The DPF requires a unique exhaust tailpipe with an exhaust cooler. The exhaust cooler mixes air with the exhaust to lower the temperature before it leaves the tailpipe.

The DPF, the tailpipe, or other exhaust system components must not be altered. Inspect regularly and clean any mud or dirt from the exhaust cooler, especially where the exhaust cooler connects to the tailpipe and the openings where fresh air enters the cooler.

The DPF will clean itself as part of normal operation. Several factors including fuel consumed, hours of engine operation, and miles driven are monitored by the Engine Control Module (ECM). The self-cleaning occurs approximately once per tank of fuel.

Caution

Damage can occur to the DPF components if the required Ultra Low Sulfur Diesel (15 ppm sulfur maximum) fuel and either CJ-4 or CK-4 engine oil are not used. This damage would not be covered by the vehicle warranty.

Under certain driving conditions, such as stop-and-go traffic, the filter cannot clean itself. A message comes on when the DPF is dirty and needs to perform a self cleaning.

For the filter to clean itself, the vehicle must be driven above 50 km/h (30 mph) until the message goes off. This will take about 30 minutes.

⚠ Warning

During DPF self cleaning or during extended idling in P (Park), the exhaust system and exhaust

(Continued)

Warning (Continued)

gases are very hot. Things that burn could touch hot exhaust parts under the vehicle and ignite. You or others could be burned. Do not park, or idle for an extended period of time, near or over papers, leaves, dry grass, or other things that can burn. Keep the exhaust area clear of material that could ignite or burn. See *Parking over Things That Burn* ⇨ *213*.

Caution

Extended idle should be avoided because the DPF system is not capable of self cleaning at idle. During extended idle operation, monitor the instrument cluster telltale lights and Driver Information Center for messages and take appropriate indicated

(Continued)

Caution (Continued)

action. Continued idling with the warning light/message on could cause irreversible damage to the DPF requiring repair and possible replacement that might not be covered by the vehicle warranty.

You will also notice a change in the exhaust sound and engine idle speed. This is normal.

If you continue to drive with the DPF warning message on and the exhaust filter is not cleaned as required, the malfunction indicator lamp and the ENGINE POWER IS REDUCED message will come on and dealer service is necessary. See *Malfunction Indicator Lamp (Check Engine Light)* ⇨ *112*.

Vehicles with the DPF have specific fuel and engine oil requirements. See*Fuel for Diesel Engines* ⇨ *238* and *Engine Oil* ⇨ *291*.

Extended idling in P (Park) can cause exhaust parts and gases to become very hot. Keep the exhaust area clear of material that could ignite or burn. See *Parking over Things That Burn* ⇨ *213*.

If equipped with Power Take-Off (PTO), monitor the instrument cluster for lights related to the DPF.

See *Accessories and Modifications* ⇨ *286* for important information if you are considering adding accessories or modifying the vehicle.

Manual Regeneration of Diesel Particulate Filter

If equipped, this feature allows for manual cleaning/regeneration of the DPF when it is unable to clean itself. It may be necessary to perform a manual regeneration if driving conditions — such as extended slow speed, stop-and-go traffic, extended idles, short drive cycles, or stationary PTO operation — prevent DPF self-cleaning.

Manual regeneration can only be used when the DPF has become at least 90% full. At 100% full, it will attempt to automatically self-clean if proper driving conditions are met. The DPF will clean itself if the vehicle can be driven above 50 km/h (30 mph) for about 30 minutes.

A Driver Information Center (DIC) message displays when manual regeneration is possible.

Scroll through the DIC pages to find the Exhaust Cleaning menu. Depending on whether the vehicle has a base or uplevel cluster, it may be under the Settings menu.

If the vehicle cannot be stopped when the DIC message first indicates cleaning is available, automatic self-cleaning may have begun. If conditions cannot be met for self-cleaning to complete, and manual regeneration is selected, it may take up to four minutes for the system to switch to manual regeneration. When the switch occurs, a DIC message prompts to start the cleaning process.

⚠ Warning

Do not leave the vehicle during the regeneration.

Make sure that there are no flammables near the muffler, DPF and exhaust pipe which may result in a fire.

Remember that the temperature of exhaust gases is high enough to burn you. You and others could be seriously injured.

Before starting the manual regeneration, make sure all of the following safety conditions are met:

- The vehicle is parked on level ground, away from any flammable materials.
- The vehicle is parked outdoors, away from any walls or buildings.
- The vehicle is at least 3 m (10 ft) from any obstructions or materials that may combust or melt.
- The shift lever is in P (Park).
- The fuel tank is at least one-eighth full.
- All fluids are at the proper level.
- No diagnostic trouble codes have been set, and the malfunction indicator lamp is not on.
- The engine coolant temperature is above 71 °C (160 °F).

After making sure all of the safety conditions have been met, press the trip odometer reset stem or ✓ on the steering wheel control for at least one second to select Start on the infotainment display.

Follow the instructions in the DIC messages. Touch ACCEPT to acknowledge that all of these safety conditions have been met and to activate regeneration.

If the infotainment display returns to the previous screen, then one or more of the necessary operating conditions has not been met. If you cannot determine which condition has not been met, see www.gmupfitter.com to contact the GM Upfitter Integration Group for assistance.

Continue to follow the instructions in the DIC messages. Press and hold the exhaust brake switch on the center stack below the climate controls for more than three seconds, and then release it, to begin the regeneration process.

If the EXHAUST BRAKE ON message displays, then the switch was released too soon. Press it again to turn off the exhaust brake, then try again when the DIC message prompts.

When manual regeneration begins, the engine speed increases, the engine cooling fan sound increases, and a DIC message indicates that cleaning is in progress.

A DIC message will display when cleaning has completed. The message will remain as long as cleaning is not necessary. Cleaning could take up to 30 minutes. Upon completion, the engine will return to normal idle, but exhaust

components will remain hot for several minutes. Do not move the vehicle until the exhaust has had time to cool. Manual regeneration can be canceled at any time by pressing the brake pedal or turning the engine off. Unusual noises may be heard if regeneration is interrupted.

Diesel Exhaust Fluid

Warning

Avoid getting Diesel Exhaust Fluid (DEF) on your skin or in your eyes as it could cause irritation. For more safety, handling, and storage information, see the Diesel Exhaust Fluid container label.

Caution

Do not mix fuel with DEF, and do not put DEF in the fuel tank. This could lead to costly repairs that might not be covered by the vehicle warranty.

Diesel Exhaust Fluid (DEF) is used with diesel engines to reduce the amount of regulated emissions produced. Products such as AdBlue are types of DEF, and are approved for use in the vehicle as long as they have an API certification label or meet ISO 22241.The fluid level in the DEF tank must be maintained for the vehicle to run properly. DEF freezes when exposed to temperatures below −11 °C (12 ° F). For DEF tank capacity see *Capacities and Specifications* ⇨ *401*.

It is normal to hear the DEF system purge fluid back into the tank after the vehicle is shut off.

Locating Diesel Exhaust Fluid

DEF can be purchased at your dealer. It can also be purchased at authorized vehicle and truck dealerships. Additionally, some diesel truck fueling stations or retailers may have DEF for purchase. For vehicles with an active OnStar service plan, OnStar can help to locate a DEF retailer. See *Recommended Fluids and Lubricants* ⇨ *391*.

Filling the DEF Tank

Caution
Use only DEF that is GM approved, or fluid containing the API certified or ISO 22241 label. The use of other fluids could damage the system, requiring costly repairs that will not be covered by the vehicle warranty.

It is recommended to fill the DEF tank on level ground and when the vehicle is not running.

When adding fluid, it is recommended to fill the DEF tank. For DEF tank capacity see *Capacities and Specifications* ⇨ *401*.

Caution
Do not overfill the DEF tank and do not allow DEF to contact the finished surfaces of the vehicle, as it could damage the vehicle (Continued)

Caution (Continued)
finish. If DEF is spilled during filling, wipe any affected surface with a damp cloth.

Do not overfill the DEF tank. When fluid reaches the top of the fill pipe, stop filling.

The def tank fill is on the rear of the passenger-side front quarter fender.

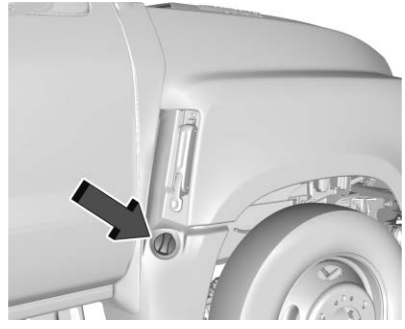

The DEF cap is blue.

In certain cold conditions, it is possible to find some frozen DEF in the DEF fill pipe opening. If this condition prevents the filling of a DEF tank, place the vehicle in a warm garage overnight.

Exhaust Fluid Low

As the DEF level drops, the Driver Information Center (DIC) will display warnings. DEF level status is available on the DIC under the vehicle Information button. See “Exhaust Fluid Level” in *Driver Information Center (DIC) (Base Level)* ⇨ *117* or *Driver Information Center (DIC) (Uplevel)* ⇨ *119*.

To avoid vehicle speed limitations, fill the DEF tank at the first opportunity after a low fluid level warning. If DEF is added before the EXHAUST FLUID EMPTY REFILL NOW message appears, it may take several km/mi for the DIC message to update.

If vehicle speed has been limited and DEF has been added, it may take up to 30 seconds after engine start with the vehicle stopped for the

refill message to clear. If the vehicle is driven before the DIC message clears, vehicle speed will still be limited. If the DIC message clears while driving, the speed limitation will be removed gradually.

If DEF is added under freezing conditions, additional time may be required to remove speed limitations, and it may require less fluid to fill the DEF tank.

Based on driving conditions and vehicle configuration, the amount needed to fill the tank will vary. As the fluid level nears empty, these messages will appear every time the vehicle is started.

If these warnings are ignored and the DEF tank becomes empty, the DIC will indicate the action needed and distance until vehicle speed is limited.

The speed limitation will occur in a series of steps, with the final speed limitation being 8km/h (5 mph) accompanied by a flashing warning light and chimes. It is recommended to fully fill the DEF tank, but at least 7.6 L (2 gal) of DEF must be added to release the vehicle from the speed limitation. See *Capacities and Specifications* ⇨ *401*, *Diesel Exhaust Fluid (DEF) Warning Light* ⇨ *115*, and *Recommended Fluids and Lubricants* ⇨ *391*.

Exhaust Fluid Quality Poor

Use only DEF that is GM approved, or fluid containing the API certified or ISO 22241 label.

DEF has an expiration date. If the system detects poor quality, or contaminated or diluted DEF, the DIC will display EXHAUST FLUID QUALITY POOR - SEE OWNERS MANUAL NOW and will show the distance until vehicle speed is limited.

The speed limitation will occur in a series of steps, with the final speed limitation being 8km/h (5 mph) accompanied by a flashing warning light and chimes.

Adding fresh DEF to the system may resolve the problem, depending on several factors. If the message persists, see your dealer or additional DIC messages may display.

Service Exhaust Fluid System

If a problem occurs with the DEF system, the DIC message SERVICE EXHAUST FLUID SYSTEM - SEE OWNERS MANUAL NOW displays and will show the distance until vehicle speed is limited.

The speed limitation will occur in a series of steps, with the final speed limitation being 8km/h (5 mph) accompanied by a flashing warning light and chimes.

In some cases this message will clear itself, indicating that the DEF system was able to correct the condition. If the message persists, see your dealer or additional DIC messages may display.

Service Emission System

If a problem occurs with the vehicle emission system, the DIC displays the message SERVICE EMISSION SYSTEM - SEE OWNERS

MANUAL NOW and will show the distance until vehicle speed is limited.

The speed limitation will occur in a series of steps, with the final speed limitation being 80km/h (50 mph) accompanied by chimes.

In some cases this message will clear itself, indicating that the emission system was able to correct the condition. If the message persists, see your dealer or additional DIC messages may display.

Automatic Transmission

If equipped, there is an electronic shift lever position indicator within the instrument cluster. This display comes on when the ignition key is turned on.

There are several different positions for the shift lever.

Heavy-Duty 6-Speed Automatic Transmission Shown, Others Similar

See “Range Selection Mode” under *Manual Mode* ⇨ *224*.

P : This position locks the rear wheels. Use P (Park) when starting the engine because the vehicle cannot move easily.

When parked on a hill, especially when the vehicle has a heavy load, you might notice an increase in the effort to shift out of P (Park). See “Torque Lock” under *Shifting Into Park* ⇨ *212*

⚠ Warning

It is dangerous to get out of the vehicle if the shift lever is not fully in P (Park) with the parking brake firmly set. The vehicle can roll.

Do not leave the vehicle when the engine is running. If you have left the engine running, the vehicle can move suddenly. You or others could be injured. To be sure the vehicle will not move, even when you are on fairly level ground, always set the parking brake and move the shift lever to P (Park). See *Shifting Into Park* ⇨ *212* and *Driving Characteristics and Towing Tips* ⇨ *247*.

R : Use this gear to back up.

Caution

Shifting to R (Reverse) while the vehicle is moving forward could damage the transmission. The repairs would not be covered by the vehicle warranty. Shift to R (Reverse) only after the vehicle is stopped.

To rock the vehicle back and forth to get out of snow, ice, or sand without damaging the transmission, see *If the Vehicle Is Stuck* ⇨ *202*.

N : In this position, the engine does not connect with the wheels. To restart the engine when the vehicle is already moving, use N (Neutral) only.

Also, use N (Neutral) when the vehicle is being towed.

⚠ Warning

Shifting into a drive gear while the engine is running at high speed is dangerous. Unless your foot is firmly on the brake pedal, the vehicle could move very rapidly. You could lose control and hit people or objects. Do not shift into a drive gear while the engine is running at high speed.

Caution

Shifting out of P (Park) or N (Neutral) with the engine running at high speed may damage the transmission. The repairs would not be covered by the vehicle warranty. Be sure the engine is not running at high speed when shifting the vehicle.

Caution

A transmission hot message may display if the automatic transmission fluid is too hot. Driving under this condition can damage the vehicle. Stop and idle the engine to cool the automatic transmission fluid. This message clears when the transmission fluid has cooled sufficiently.

D : This position is for normal driving. It provides the best fuel economy. If more power is needed for passing, press the accelerator pedal down.

- Going less than about 55 km/h (35 mph), push the accelerator pedal about halfway down.
- Going about 55 km/h (35 mph) or more, push the accelerator all the way down.

  By doing this, the vehicle shifts down to the next gear and has more power.

Use D (Drive) and Tow/Haul Mode when towing a trailer, carrying a heavy load, driving on steep hills, or driving off-road. Shift the transmission to a lower gear selection if the transmission shifts too often.

Downshifting the transmission in slippery road conditions could result in skidding. See “Skidding” under *Loss of Control* ⇨ *194*.

The vehicle has a shift stabilization feature that adjusts the transmission shifting to the current driving conditions in order to reduce rapid upshifts and downshifts. This shift stabilization feature is designed to determine, before making an upshift, if the engine is able to maintain vehicle speed by analyzing things such as vehicle speed, throttle position, and vehicle load. If the shift stabilization feature determines that a current vehicle speed cannot be maintained, the transmission does not upshift and instead holds the current gear. In some cases, this could appear to be a delayed shift, however the transmission is operating normally.

The transmission uses adaptive shift controls. The adaptive shift control process continually compares key shift parameters to pre-programmed ideal shifts stored in the transmission’s computer. The transmission constantly makes adjustments to improve vehicle performance according to how the vehicle is being used, such as with a heavy load or when the temperature changes. During this adaptive shift control process, shifting might feel different as the transmission determines the best settings.

When temperatures are very cold, the transmission's gear shifting could be delayed providing more stable shifts until the engine warms up. Shifts could be more noticeable with a cold transmission. This difference in shifting is normal.

L : This position allows selection of a range of gears appropriate for current driving conditions. If equipped, see “Range Selection Mode” under *Manual Mode* ⇨ *224*.

Caution

Spinning the tires or holding the vehicle in one place on a hill using only the accelerator pedal may damage the transmission. The repair will not be covered by the vehicle warranty. If the vehicle is stuck, do not spin the tires.

(Continued)

Caution (Continued)

When stopping on a hill, use the brakes to hold the vehicle in place.

Normal Mode Grade Braking

If equipped with a gasoline engine and an automatic transmission, Normal Mode Grade Braking is enabled when the vehicle is started, but is not enabled in Range Selection Mode. It assists in maintaining desired vehicle speeds when driving on downhill grades by using the engine and transmission to slow the vehicle. The first time the system engages for each ignition key cycle, a DIC message will be displayed.

To disable or enable Normal Mode Grade Braking within the current ignition key cycle, press and hold the Tow/Haul button for five seconds. When the button is released, the requested mode change is made. A DIC message displays.

For other forms of grade braking, see *Tow/Haul Mode* ⇨ *225* and *Cruise Control* ⇨ *234*.

Kickdown Mode

If equipped, the accelerator pedal provides an additional downshift after pressing through the kickdown feature.

It requires extra pedal pressure near the end of its travel to engage.

Manual Mode

Range Selection Mode

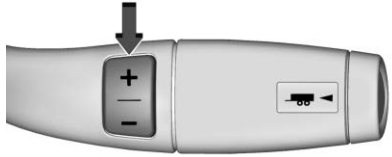

If equipped, Range Selection Mode helps control the vehicle's transmission and vehicle speed while driving downhill or towing a trailer by letting you select a desired range of gears.

To use this feature:

1. Move the shift lever to L (Manual Mode).
2. Press the plus/minus buttons on the shift lever to select the desired range of gears for current driving conditions.

When the shift lever is moved from D (Drive) to L (Manual Mode), a number displays next to the L, indicating the current transmission range.

This number is the highest gear that the transmission will command while operating in L (Manual Mode). All gears below that number are available. As driving conditions change, the transmission can automatically shift to lower gears. For example, when L5 is selected, 1 (First) through 5 (Fifth) gears are automatically shifted by the transmission, but 6 (Sixth) cannot be used until the plus/minus button on the shift lever is used to change to the range.

The gear that the transmission is operating in when the shift lever is moved from D (Drive) to L (Manual Mode) determines if a downshift occurs. See the following chart.

Gear before shifting from D (Drive) to L (Manual Mode)	6th	5th	4th	3rd	2nd	1st
Range after shifting from D (Drive) to L (Manual Mode)	L4	L4	L3	L2	L2	L1

Grade Braking is not available when Range Selection Mode is active. See *Tow/Haul Mode* ⇨ *225*.

While using Range Selection Mode, cruise control and the Tow/Haul Mode can be used.

If the vehicle has an exhaust brake, it can also be used, but will not automatically downshift the transmission. See *Exhaust Brake* ⇨ *232*

Caution

Spinning the tires or holding the vehicle in one place on a hill using only the accelerator pedal

(Continued)

Caution (Continued)

may damage the transmission. The repair will not be covered by the vehicle warranty. If the vehicle is stuck, do not spin the tires. When stopping on a hill, use the brakes to hold the vehicle in place.

Low Traction Mode

If equipped, Low Traction Mode assists in vehicle acceleration when road conditions are slippery, such as with ice or snow. While the vehicle is at a stop, select L2 using Range Selection Mode. This will limit torque to the wheels and help to prevent the tires from spinning.

Tow/Haul Mode

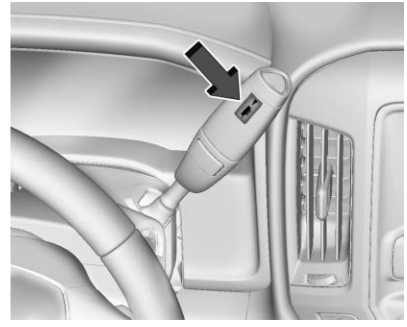

Vehicles with an automatic transmission have a Tow/Haul Mode. The Tow/Haul Mode adjusts the transmission shift pattern to reduce shift cycling. This provides increased performance, vehicle control, and enhanced transmission and engine cooling when driving down steep hills or mountain grades, when towing, or when hauling heavy loads.

The selector button is on the shift lever. Turn the Tow/Haul Mode on and off by pressing the button. When the Tow/Haul Mode is enabled, a light on the instrument cluster will come on.

See *Tow/Haul Mode Light* ⇨ *114* and *Hill and Mountain Roads* ⇨ *200*. Also see “Tow/Haul Mode” under *Towing Equipment* ⇨ *254*.

Tow/Haul Mode Grade Braking

Tow/Haul Mode Grade Braking is only enabled while the Tow/Haul Mode is selected and the vehicle is not in the Range Selection Mode. See “Tow/Haul Mode” listed previously and *Manual Mode* ⇨ *224*. Tow/Haul Mode Grade Braking assists in maintaining desired vehicle speeds when driving on downhill grades by using the engine and transmission to slow the vehicle.

On vehicles with a diesel engine, Tow/Haul Mode Grade Braking can be enabled or disabled by pressing the Tow/Haul Mode button. Use the exhaust brake and Tow/Haul Mode for maximum grade braking.

See *Towing Equipment* ⇨ *254*.

For other forms of grade braking, see *Automatic Transmission* ⇨ *221* and *Cruise Control* ⇨ *234*.

Drive Systems

Four-Wheel Drive

If equipped with four-wheel drive, the engine's driving power can be sent to all four wheels for extra traction.

Read the appropriate section for transfer case operation before using.

Caution
Do not drive on clean, dry pavement in 4 ↑ and 4 ↓ (if equipped) for an extended period of time. These conditions may cause premature wear on the vehicle’s powertrain.

Driving on clean, dry pavement in 4 ↑ or 4 ↓ may:

- Cause a vibration to be felt in the steering system.
- Cause tires to wear faster.

- Make the transfer case harder to shift, and cause it to run noisier.

Caution

Extended high-speed operation in 4 ↓ may damage or shorten the life of the drivetrain.

Engagement noise and bump when shifting between 4 ↓ and 4 ↑, with the engine running, is normal.

Manual Locking Hubs

⚠ Warning

It is dangerous to get out of the vehicle if the shift lever is not fully in P (Park) with the parking brake firmly set. The vehicle can roll.

Do not leave the vehicle when the engine is running. If you have left the engine running, the vehicle can move suddenly. You or others could be injured. To be sure the

(Continued)

Warning (Continued)

vehicle will not move, even when you are on fairly level ground, always set the parking brake and move the shift lever to P (Park). See *Shifting Into Park* ⇨ *212*.

The locking hubs are located on each end of the front axle and must be manually turned to LOCK before the four-wheel drive modes can be used.

The hubs may remain in the LOCK position when road surface traction conditions are variable or it is unsafe to unlock them. Turn the locking hubs to FREE when it is safe to do so.

When four-wheel drive is no longer needed turn the locking hubs to FREE. If hubs are locked in 2 wheel drive you may experience driveline vibration.

Electronic Transfer Case

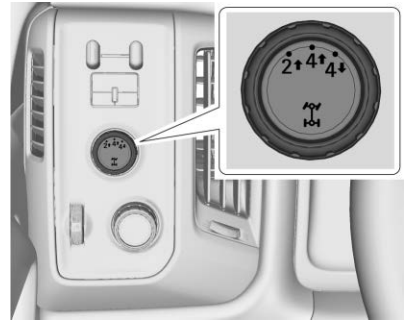

Use the transfer case knob, next to the steering wheel, to shift into and out of four-wheel drive for extra traction.

All of the lights will blink on then off momentarily when the ignition is turned on. The light that remains on will indicate the state of the transfer case.

If the indicator mark on the switch does not match up with the light then that likely means the switch was moved when the ignition was off.

The indicator mark on the switch must line up with the indicator light before a shift can be commanded. To command a shift rotate the transfer case switch to the new desired position. The light will blink meaning that the shift is in progress. When the shift is completed the new position will be illuminated. If the transfer case can not complete a shift command, it will go back to its last chosen setting.

In extreme cold weather it may be necessary to slow or stop the vehicle to shift from 2↑ to 4↑.

Delayed shifts from 4↑ to 2↑ may be experienced due to uneven tire wear, low tire pressure, high vehicle loading, or cold temperatures.

Caution
Shifting the transmission into gear before the requested mode indicator light has stopped flashing could damage the transfer case.

The settings are:

2 ↑ (Two-Wheel Drive High) : Use for driving on most streets and highways. The front axle is not engaged. This setting provides the best fuel economy.

4 ↓ (Four-Wheel Drive Low) : This setting engages the front axle and delivers extra torque. Choose 4 ↓ if driving off-road in deep sand, deep mud, or deep snow, and while climbing or descending steep hills. When engaged, keep vehicle speed below 72 km/h (45 mph).

4 ↑ (Four-Wheel Drive High) : Use when extra traction is needed. The front axle engages and helps when driving on snowy or icy roads, when off-roading, or when plowing snow.

Shifting Into 4 ↑

Turn the knob to 4 ↑ at any speed up to 121 km/h (75 mph), except from 4 ↓. The indicator light will flash while shifting and will remain on the selected setting.

Shifting Into 2 ↑

Turn the knob to 2 ↑ at any speed, except when shifting from 4 ↓.

Shifting Into 4 ↓

When 4 ↓ is engaged, vehicle speed should be kept below 72 km/h (45 mph).

1. The ignition must be on and the vehicle must be stopped or moving less than 5 km/h (3 mph) with the transmission in N (Neutral). It is best for the vehicle to be moving 1.6 to 3.2 km/h (1 to 2 mph).
2. Turn the knob to 4 ↓. Wait for the 4 ↓ indicator light to stop flashing before shifting the transmission into gear.

If the transmission is in gear and/or moving more than 5 km/h (3 mph), the 4 ↓ indicator light will flash for 30 seconds and not complete the shift. After 30 seconds the transfer case will shift to 4 ↑. Turn the knob to 4 ↑ to see the indicator. With the vehicle moving less than 5 km/h (3 mph), and the transmission in N (Neutral), attempt the shift again.

Shifting Out of 4 ↓

1. To shift out of 4 ↓ the vehicle must be stopped or moving less than 5 km/h (3 mph) with the transmission in N (Neutral) and the ignition in on. It is best for the vehicle to be moving 1.6 to 3.2 km/h (1 to 2 mph).
2. Turn the knob to 4 ↑ or 2 ↑. Wait for the 4 ↑ or 2 ↑ indicator light to stop flashing before shifting the transmission into gear.

If the transmission is in gear and/or moving more than 5 km/h (3 mph), the 4 ↑ or 2 ↑ indicator light will flash for 30 seconds, but will not complete the shift. With the vehicle moving less than 5 km/h (3 mph), and the transmission in N (Neutral), attempt the shift again.

Brakes

Antilock Brake System (ABS)

ABS is designed to enhance overall vehicle safety when a vehicle is driven within its safe operating limits. ABS cannot compensate for a vehicle which is being driven beyond the physical limits of control. Drivers operating an ABS equipped vehicle should employ safe driving practices and assume no additional driving risks.

⚠ Warning

To prevent property damage, personal injury, and/or death, if the ABS warning indicator comes on, have the ABS system repaired immediately as stopping distances may increase under certain braking conditions. Take every precaution to prevent wheel lockup, which could result in loss of vehicle control.

The Antilock Brake System is a mandated feature included in the hydraulic brake system.
It electronically monitors vehicle wheel speed at all times, and only engages when wheel lock is imminent. The standard hydraulic brake system controls normal braking when the ABS is not engaged.

ABS Operation

ABS requires no changes in driving practices. For the best stopping performance with or without ABS, modulate — do not pump — the brake pedal until the vehicle slows to the desired speed or stops. Be aware that ABS on a towing vehicle does not control brakes on towed vehicles. Towed vehicles may or may not have ABS. ABS will prevent lockup of controlled wheels if you over-brake for existing road conditions. Optimum vehicle control for existing road conditions will be provided as a result of the ABS preventing wheel lockup at speeds above approximately 6 km/h (4 mph). The ABS cannot provide any better braking and steering capability than the available road traction will permit. If the road is slippery, it will take longer to stop than on a dry road. Steering maneuverability will be similarly limited. Vehicle speed must be reduced to compensate for the extended time and distance required to stop or slow the vehicle on slippery roads.

The wheel hubs carry exciter rings used by the axle mounted sensors to transmit wheel speed information to the ABS electronic control unit located on the chassis frame. The control unit monitors and compares all wheel speed inputs to determine if any wheel(s) are about to lock.
If wheel lockup is about to occur, the control unit commands the appropriate modulator valve to adjust pressure delivery to prevent wheel lockup.

If over-braking causes wheel lockup on the rear drive axles while retarding devices are in operation, the ABS will interrupt and disable the retarder until the lockup situation has stopped.

The ABS is equipped with a warning indicator in the instrument cluster. Each time the ignition is turned on, the ABS warning indicator will illuminate for several seconds and then turn off. If an ABS fault is detected, the warning indicator will stay on steady and ABS fault codes will be electronically stored in the ABS controller.

Antilock Driving Tips

- Use controlled, even pressure to stop the vehicle, being careful not to skid. Most effective stopping will be achieved in this situation.
- If the vehicle begins to skid, maintain even pressure on the brake pedal. The ABS controller will rapidly cycle the brakes on the skidding wheel(s), while maintaining even pressure on the non-skidding wheels.

- While maintaining even pressure on the brake pedal, steer around any hazardous objects in your path.
- Attempt to steer clear of traffic, pedestrians, or other obstacles while you are in an emergency braking situation. ABS will allow you to steer the vehicle during braking while it comes to a full stop. ABS is not an excuse to take unnecessary risks. Always drive carefully and stay a safe distance away from the vehicle in front of you.
- Do not pump the brake pedal during a skid unless the ABS system is not functioning.

ABS Self-Check

If an antilock fault develops, standard brake system operation is maintained. The brake system is still operational, but the antilock system does not operate to prevent wheel lockup if you over apply the brakes for existing conditions.

If the ABS indicator stays illuminated, have the system serviced immediately.

A warning light on the instrument cluster indicates the status of the ABS. If the system is working normally when the ignition is turned on, the ABS indicator comes on for several seconds before going out.

Parking Brake

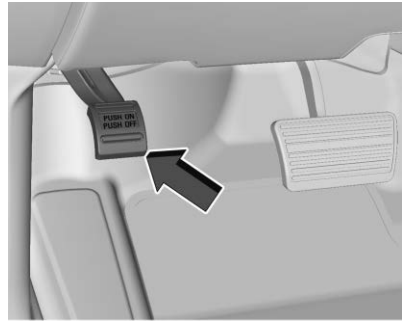

Set the parking brake by holding the regular brake pedal down, then pushing down the parking brake pedal.

If the ignition is on, the brake system warning light will come on. See *Brake System Warning Light* ⇨ *113*.

Caution
Driving with the parking brake on can overheat the brake system and cause premature wear or damage to brake system parts. Make sure that the parking brake is fully released and the brake warning light is off before driving.

To release the parking brake, hold the regular brake pedal down, then push down momentarily on the parking brake pedal until you feel the pedal release. Slowly pull your foot up off the parking brake pedal. If the parking brake is not released when you begin to drive, a DIC message will appear and a chime will sound warning you that the parking brake is still on.

Exhaust Brake

The exhaust brake can be used to enhance the vehicle brake system and reduce brake lining wear.

Downshifts may be automatically selected to increase engine speed, which increases the effectiveness of the exhaust brake. The number of downshifts selected is determined by the length of time the brakes are applied and the rate the vehicle is slowing. The system delivers the correct amount of braking to assist in vehicle control. The heavier the vehicle load, the more active the engine exhaust brake will be. Use of the exhaust brake will help maintain vehicle speed when used with cruise control. See *Cruise Control* ⇨ *234*.

Automatic downshifts will not occur if the vehicle is in Range Selection Mode. See *Manual Mode* ⇨ *224*.

The exhaust brake only activates when the transmission torque converter is locked. This can vary based on vehicle speed, gear, and load.

To activate the system, press the exhaust brake switch. A light in the switch will come on when the exhaust brake is activated. The switch must be pressed at each vehicle start for the system to be active.

The Driver Information Center (DIC) displays the message EXHAUST BRAKE ON for approximately three seconds, then clears.

To turn the brake off, press the exhaust brake switch a second time. The DIC displays the message EXHAUST BRAKE OFF for approximately three seconds, then clears.

The exhaust brake will be more active when in Tow/Haul Mode.

A light comes on in the instrument cluster when the exhaust brake and Tow/Haul are activated. The switch must be pressed at each vehicle start for the system to be active.

Ride Control Systems

Traction Control System (TCS)

Automatic Traction Control (ATC) System

ATC is an integrated addition to the ABS. This system utilizes input from the individual wheel sensors to determine if drive axle wheel slip is occurring during vehicle acceleration. If drive axle wheel slippage is occurring, the Controller Relay initiates action to reduce engine power and/or to selectively apply rear brakes to transfer power from the slipping wheel to the opposite wheel. This enables the vehicle to gain momentum and move torque to road surfaces, providing more traction.

The system instantly blinks a dash indicator to advise the driver that wheel spin is occurring.

If wheel spin occurs at speeds above 40 km/h (25 mph), the indicator blinks and, using its link to the engine control module, the ATC reduces engine torque to a level suitable for the available traction. The brakes are not applied, even slightly, at any speed above 40 km/h (25 mph).

Both the ABS and ATC are features added to the basic hydraulic brake system, and the loss of either or both systems should in no way affect the basic brake system. ABS and ATC require no changes in driving style and it is best not to change your usual, careful driving habits. The ATC system should not be noticed until it is needed. Routine operation of the brakes and accelerator is unchanged.

Air Suspension

Caution
To prevent ride degradation and suspension damage, the vehicle must not be operated on the road without air in the suspension air bags.

If equipped, the air suspension automatically adjusts to different loads to maintain constant frame height. The system maintains vehicle ride quality and driver comfort.

Air Suspension Air Dump

If equipped, air suspension allows the rear suspension to be temporarily lowered by several inches.

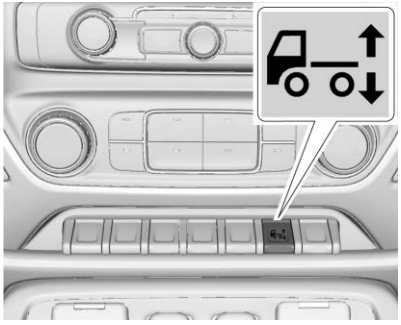

The system is controlled by the Air Suspension Dump (ASD) switch in the center stack. This switch controls solenoids, which direct air to the suspension dump and height valve.

Pressing the ASD switch when the vehicle is in PARK and the ignition key is in ON/RUN position releases air supplied to the rear suspension, lowering (dumping) the rear air suspension for loading. The indicator on the ASD switch illuminates.

When the vehicle is shifted out of PARK, air is filled into the system and the indicator on the switch turns off.

Vehicles with air suspension have an AUX warning lamp immediately to the left of the ASD switch. The suspension may refill slowly if this lamp is on.

Cruise Control

⚠ Warning

Cruise control can be dangerous where you cannot drive safely at a steady speed. Do not use cruise control on winding roads or in heavy traffic.

Cruise control can be dangerous on slippery roads. On such roads, fast changes in tire traction can cause excessive wheel slip, and you could lose control. Do not use cruise control on slippery roads.

With cruise control a speed of about 40 km/h (25 mph) or more can be maintained without keeping your foot on the accelerator. Cruise control does not work at speeds below about 40 km/h (25 mph).

See “Tow/Haul Mode Grade Braking” under *Tow/Haul Mode* ⇨ *225* for an explanation of how cruise control interacts with the Range Selection Mode, Tow/Haul Mode, and Grade Braking systems.

If the cruise control is being used and the Traction Control system (TCS) begins to limit wheel spin, the cruise control will automatically disengage. When road conditions allow you to safely use it again, cruise control can be turned back on.

If the brakes are applied, cruise control disengages.

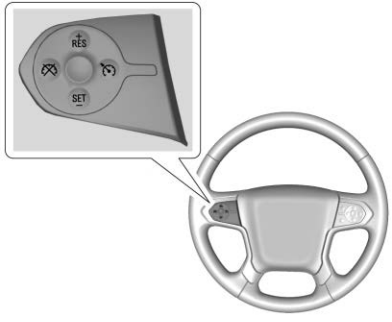

: Press to turn the system on or off. The indicator light is white when cruise control is on and turns off when cruise control is off.

+RES : If there is a set speed in memory, press briefly to resume to that speed or press and hold to accelerate. If cruise control is already active, use to increase vehicle speed.

SET− : Press briefly to set the speed and activate cruise control. If cruise control is already active, use to decrease vehicle speed.

: Press to disengage cruise control without erasing the set speed from memory.

Setting Cruise Control

If is on when not in use, SET− or +RES could get pressed and go into cruise when not desired. Keep off when cruise is not being used.

1. Press to turn the cruise system on.
2. Get up to the desired speed.
3. Press and release SET−.
4. Remove your foot from the accelerator.

The cruise control indicator on the instrument cluster turns green after cruise control has been set to the desired speed. See *Instrument Cluster* ⇨ *104*.

Resuming a Set Speed

If the cruise control is set at a desired speed and then the brakes are applied or is pressed, the cruise control is disengaged without erasing the set speed from memory.

Once the vehicle speed reaches about 40 km/h (25 mph) or more, briefly press +RES. The vehicle returns to the previous set speed.

Increasing Speed While Using Cruise Control

If the cruise control system is already activated:

- Press and hold +RES until the desired speed is reached, then release it.

- To increase vehicle speed in small increments, briefly press +RES. For each press, the vehicle goes about 1.6 km/h (1 mph) faster.

The speedometer reading can be displayed in either English or metric units. See *Instrument Cluster* ⇨ *104*. The increment value used depends on the units displayed.

Reducing Speed While Using Cruise Control

If the cruise control system is already activated:

- Press and hold SET– until the desired lower speed is reached, then release it.
- To slow down in small increments, briefly press SET–. For each press, the vehicle goes about 1.6 km/h (1 mph) slower.

The speedometer reading can be displayed in either English or metric units. See *Instrument Cluster* ⇨ *104*. The increment value used depends on the units displayed.

Passing Another Vehicle While Using Cruise Control

Use the accelerator pedal to increase the vehicle speed. When you take your foot off the pedal, the vehicle will slow down to the previous set cruise speed. While pressing the accelerator pedal or shortly following the release to override cruise control, briefly pressing SET– will result in cruise control set to the current vehicle speed.

Using Cruise Control on Hills

How well the cruise control works on hills depends on the vehicle speed, the load, and the steepness of the hills. When going up steep hills, pressing the accelerator pedal may be necessary to maintain vehicle speed.

While going downhill:

- Cruise Grade Braking is enabled when the vehicle is started and cruise control is active. It is not enabled in Range Selection Mode. It assists in maintaining driver selected speed when driving on downhill grades by using the engine and transmission to slow the vehicle.

  To disable and enable Cruise Grade Braking for the current ignition key cycle, press and hold the Tow/Haul button for five seconds. A DIC message displays.
- Cruise Grade Braking is enabled when Tow/Haul Mode is on, the exhaust brake is on, or both are on.

For other forms of descent control, see *Tow/Haul Mode* ⇨ *225*.

Ending Cruise Control

There are four ways to end cruise control:

- Step lightly on the brake pedal.
- Press ⊗.
- Shift the transmission to N (Neutral).
- To turn off cruise control, press ⊗.

Erasing Speed Memory

The cruise control set speed is erased from memory if ⏲ is pressed or the ignition is turned off.

Driver Assistance Systems

Rear Vision Camera (RVC)

If equipped, the Rear Vision Camera (RVC) may help the driver park or avoid objects. Always check around the vehicle when parking or backing.

When the vehicle is shifted into R (Reverse), the RVC displays an image of the area behind the vehicle in the infotainment display. The previous screen displays when the vehicle is shifted out of R (Reverse) after a short delay. To return to the previous screen sooner, press any button on the infotainment system, shift into P (Park), or reach a vehicle speed of approximately 12 km/h (8 mph).

Displayed images may be farther or closer than they appear. The area displayed is limited and objects that are close to either corner of the bumper or under the bumper do not display.

⚠ Warning

The camera(s) do not display children, pedestrians, bicyclists, crossing traffic, animals, or any other object outside of the cameras' field of view, below the bumper, or under the vehicle. Shown distances may be different from actual distances. Do not drive or park the vehicle using only these camera(s). Always check behind and around the vehicle before driving. Failure to use proper care may result in injury, death, or vehicle damage.

Fuel

Top Tier Fuel

GM recommends the use of TOP TIER Diesel Fuel to keep the engine clean, reduce engine deposits, and maintain optimal vehicle performance. Look for the TOP TIER Logo or see www.toptiergas.com for a list of TOP TIER Diesel Fuel marketers and applicable countries.

Fuel for Diesel Engines

The selection of a high-quality fuel is important for maintaining optimum vehicle performance. Diesel fuel should meet or exceed the minimum requirements in the most current versions of the local fuel standards

Do not use fuel with more than 15 ppm sulfur.

Do not use a diesel blend containing more than 20% biodiesel by volume.

Caution

Use of fuel that does not comply with the required technical standards can lead to engine power loss, increased wear, or engine damage and may void your warranty.

Some improper fuels are:

- Diesel fuel with the addition of gasoline.

(Continued)

Caution (Continued)

- Diesel fuel mixed with engine oil or automatic transmission fluid.
- Triglyceride fuels, such as raw vegetable oil or animal fat, in any form, including with blends of diesel or biodiesel.
- Marine diesel fuel and fuel oils.
- Diesel-water emulsions, such as Aquazole.
- Aftermarket diesel fuel additives, which contain alcohols, organo-metallic additives, or water emulsifiers.

Caution

If the vehicle is accidentally refueled with gasoline, do not continue driving the vehicle. Driving the vehicle will damage the fuel system. Have the vehicle towed to a qualified technician to have the gasoline removed from the tank and fuel system. Refuel with Ultra Low Sulfur Diesel fuel. It is also recommended to have the fuel system flushed with Ultra Low Sulfur Diesel, to ensure all gasoline is removed.

Some conditions, such as dirty fuel, may decrease fuel filter life and a CHANGE FUEL FILTER message may come on in the Driver Information Center (DIC).

Climate Grade Diesel Fuels

At temperatures below 0 °C (32 °F), avoid using biodiesel blends above 5% by volume. Using such a fuel may cause fuel filter plugging, system gelling, and freezing, which may adversely impact vehicle starting.

Severe winter grade diesel fuel, such as 1-D diesel fuel or Arctic grade diesel fuel, can be used in extreme cold temperatures (below −18 °C or 0 °F); however, doing so will reduce power and fuel economy. Avoid using severe winter grade fuel in warm or hot climates. It can result in stalling, poor starting, and damage to the fuel injection system.

Fuels improperly blended for cold temperature operation may result in restricted fuel filters. The vehicle is equipped with a fuel heating system to prevent gelling or waxing of conventional diesel fuel and biodiesel blends, but may not prevent all cases.

In case of severe winter conditions, the fuel filter may become clogged by wax naturally present in the fuel. To unclog it, move the vehicle to a warm garage area and allow the filter to warm up. The fuel filter may need to be replaced. See *Fuel Filter Replacement* ⇨ *244*.

Biodiesel

Biodiesel is a renewable fuel produced from vegetable oils or animal fats that have been chemically modified to make it compatible with diesel fuel.

Caution

Do not use home-made biodiesel or home test kits because the quality cannot be verified by approved scientific methods. Do not use raw vegetable oil or other unmodified bio-oils, fats, or blends of vegetable oil with diesel. They could damage the fuel system and engine, and damages would not be covered by the vehicle warranty.

Biodiesel Blends

Fuels with a biodiesel content up to 20% by volume may be used (e.g., named B20). Only use biodiesel blends up to 20% by volume that comply with your country's or region's fuel standards.

Caution

Do not use blends containing more than 20% biodiesel. Any engine, fuel system, or exhaust after-treatment system damage would not be covered by the vehicle warranty.

As a renewable fuel, biodiesel provides some environmental benefits. However, biodiesel has unique properties and needs to be handled differently than diesel fuel. Its use presents additional risks and may not be appropriate in all situations. Certain vehicle operating modes increase these risks and should be avoided.

Biodiesel fuel quality degrades with time and exposure to high temperature quicker than Ultra Low Sulfur Diesel fuel. More frequent refueling provides the best opportunity to have a supply of fresh fuel. Storage at hot ambient temperatures will accelerate biodiesel degradation.

If the vehicle is not driven often and uses little fuel, or if it is stored for extended periods of time, avoid the use of biodiesel blended fuels above 5% by volume. When the vehicle is stored for longer than one month, it should be run out of biodiesel to below one-quarter tank, refueled with biodiesel-free fuel, and driven several kilometers (miles) before storage.

Cold Weather Operation

In cold weather, the fuel filter may become clogged by wax naturally present in the fuel. To unclog it, move the vehicle to a warm garage area and allow the filter to warm up. The fuel filter may need to be replaced. See *Fuel Filter Replacement* ⇨ *244*.

At temperatures below 0 °C (32 °F), it is recommended to avoid using biodiesel blends above 5% blend. This blend may cause fuel filter plugging, system gelling, and freezing that may affect vehicle starting. You may need to turn the ignition on and off a few times before the vehicle will start. Also, idle the vehicle for a couple of minutes before accelerating.

It is recommended to use Ultra Low Sulfur No. 1-D diesel fuel or a blend of No. 1-D and No. 2-D diesel fuel to enhance vehicle operation in cold weather at temperatures below 0 °C (32 °F). Use of No. 1-D diesel fuel may lower the fuel economy. For additional information for better cold weather operation, see *Engine Heater* ⇨ *210*.

Water in Fuel

Improper fuel tank inspection or cleaning, or contaminated fuel from suppliers, can cause water to be pumped into the fuel tank along with the diesel fuel. If a WATER IN FUEL SERVICE REQUIRED message displays, the water must be drained immediately.

⚠ Warning

Diesel fuel containing water is still combustible. You or others could be burned. If the fuel needs to be drained, keep sparks, flames, and smoking materials away from the mixture.

Caution

Water in the diesel fuel can corrode internal components of the fuel system and lead to severe damage. It can also support fungus or bacteria growth, which can damage the fuel system and Fuel Operated Heater (FOH) (if equipped). Even with a diesel fuel biocide, the fuel system may still need to be cleaned. Your dealer can advise of the appropriate solution.

(Continued)

Caution (Continued)

If the fuel tank needs to be purged to remove water, see your dealer or a qualified technician. Improper purging can damage the fuel system and block the FOH.

Water in Fuel Troubleshooting

If the WATER IN FUEL SERVICE REQUIRED message comes on:

Problem	Recommended Action
Message displays but goes off during the ignition cycle.	The fuel filter is partially filled with water. Drain the water immediately. See "Removing Water from the Fuel Filter" following.
Message displays and stays on.	Drain the fuel filter immediately. If no water can be drained, and the temperature is below freezing, then water may be frozen in the filter. Move the vehicle to a warm location to thaw the water, then drain the fuel. If water still does not drain, see your dealer.

Problem	Recommended Action
Immediately after refueling, message displays and stays on.	A large amount of water is in the fuel tank. Drain the fuel filter immediately. If the message stays on or comes back on without refueling, then fuel tank purging is required. See your dealer. If the message displays and the vehicle stalls or runs rough, do not drive until the water contaminated fuel is drained.

Caution

Driving with this message on can damage the fuel injection system and the engine. If the message comes on right after a refuel, water was pumped into the fuel tank. Turn off the engine and drain the water immediately.

Removing Water from the Fuel Filter

To drain water:

1. Turn the engine off and apply the parking brake.

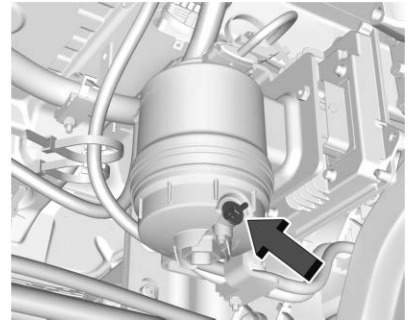

2. Place a container under the filter drain valve. The filter drain valve is on the bottom of the fuel filter located under the vehicle on the driver side, inside the frame rail.
3. Open the drain valve by turning it counterclockwise. Allow the filter to drain until all of the water has been removed. Close the valve.
4. Properly dispose of the water contaminated fuel.
5. Start the engine and let it run for a few minutes. During the draining process, air may have

entered the fuel system. If the engine stalls, the fuel system may need to be primed. See "Fuel Priming" following.

Fuel Priming

For the fuel system to work properly, the fuel lines must be full of fuel. If air gets in, the fuel lines need to be primed before operating the vehicle.

If air is present, the following may have happened:

- The vehicle ran out of fuel.
- The fuel filter was removed.
- The fuel lines were removed or disconnected.
- The fuel filter water drain valve was opened while the engine was running.

Priming the Fuel System

There is an electric priming pump that will bring fuel to the engine and eliminate air in the fuel lines. To prime the engine:

1. Correct any condition that caused the loss of prime.
2. Turn the ignition on for 30 seconds. Do not start the engine. The fuel pump will start priming.
3. Turn the ignition off, then back to START, and crank the engine for 15 seconds.
4. If the engine does not start, repeat Steps 2 and 3 until the engine starts.

   If the engine does not start after repeating Steps 2 and 3 three times, turn the ignition off for 60 seconds.
5. Repeat the above steps until the engine starts.
6. If the engine starts, but does not run smoothly, increase the engine speed slightly.
7. If the engine starts and runs but stalls again, turn the ignition off for 60 seconds.
8. When the engine starts, let it idle for a few minutes and check the filter for any leaks.

Running Out of Fuel

⚠ Warning

Diesel fuel is combustible. It could start a fire if it gets on hot engine parts. You could be burned. Catch any fuel from the air bleed valve, and wipe up any spilled fuel with a cloth.

If the engine has stalled due to running out of fuel, try the following steps to restart it:

1. If parked on a level surface, add at least 7.6 L (2 gal) of fuel. Up to 18.9 L (5 gal) may be needed if parked on a slope.
2. Follow the fuel priming procedure earlier in this section to prime the fuel filter.
3. Turn the ignition key to START for 10 to 15 seconds at a time until the engine starts. If the engine tries to run, but does not run smoothly, increase the

rpm slightly by using the accelerator pedal. This will help force air through the system.

4. Return to Step 2 if the engine stalls and will not restart.
5. After a few attempts, if the engine still does not start, see your dealer.

Fuel Filter Replacement

⚠ Warning

Diesel fuel is flammable. It could start a fire if something ignites it, and people could be burned. Do not let it get on hot engine parts, and keep matches or other ignition sources away.

The fuel filter is on the driver side, inside the frame rail.

To replace the fuel filter:

1. Drain any water from the filter. See “Removing Water from the Fuel Filter” in *Water in Fuel* ⇨ *240*.

   Keep the engine off until the procedure is completed.
2. Apply the parking brake.

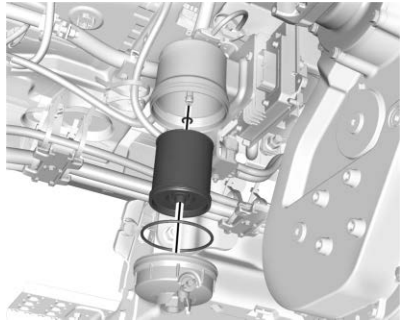

3. Remove the filter element cap by turning it counterclockwise.
4. Remove the filter element. If there is any dirt on the filter sealing surface, clean it off.
5. Install the new filter element and o-ring.
6. Reinstall and tighten the filter cap to the housing.
7. Use the fuel filter priming procedure to prime the fuel filter. See “Fuel Priming” in *Water in Fuel* ⇨ *240*.
8. Start the engine and let it idle for five minutes. Check the fuel filter and air bleed valve for leaks.
9. Reset the fuel filter monitor. See *Driver Information Center (DIC) (Base Level)* ⇨ *117* or *Driver Information Center (DIC) (Uplevel)* ⇨ *119*.

Filling the Tank

⚠ Warning

Fuel vapors and fuel fires burn violently and can cause injury or death.

- To help avoid injuries to you and others, read and follow all the instructions on the fuel pump island.

(Continued)

Warning (Continued)

- Turn off the engine when refueling.
- Keep sparks, flames, and smoking materials away from fuel.
- Do not leave the fuel pump unattended.
- Avoid using electronic devices while refueling.
- Do not re-enter the vehicle while pumping fuel.
- Keep children away from the fuel pump and never let children pump fuel.
- Fuel can spray out if the fuel cap is opened too quickly. This spray can happen if the tank is nearly full, and is more likely in hot weather. Open the fuel cap slowly and wait for any hiss noise to stop, then unscrew the cap all the way.

To remove the fuel cap, turn it slowly counterclockwise.

Dual Tank Fueling

If your vehicle is equipped with dual fuel tanks, each tank must be filled through its own fill port.

Fueling Precautions

⚠ Warning

Overfilling the fuel tank by more than three clicks of a standard fill nozzle may cause:

- Vehicle performance issues, including engine stalling and damage to the fuel system.
- Fuel spills.
- Potential fuel fires.

Federal Motor Carrier Safety Regulations require the driver or any employee of a motor carrier to observe the following requirements:

- Do not fuel a motor vehicle with the engine running, except when it is necessary to run the engine to fuel the vehicle.
- Do not smoke or expose any open flame in the vicinity of a vehicle being fueled.
- Do not fuel a motor vehicle unless the nozzle of the fuel hose is continuously in contact with the intake pipe of the fuel tank.
- Do not permit any other person to engage in such activities as would be likely to result in fire or explosion.

Be careful not to spill fuel. Wait a few seconds after you have finished pumping before removing the nozzle. Clean fuel from painted surfaces as soon as possible.

Diesel fuel can foam when filling the tank. This can cause the automatic pump nozzle to shut off, even if the tank is not full. If this happens, wait for the foaming to stop, and then fill the tank more slowly.

⚠ Warning

Heat coming from the engine can cause the fuel to expand and force the fuel out of the tank.
If something ignites the fuel, a fire could start. To help avoid this, fill the tank slowly and only until the nozzle shuts off. Do not top it off. Clean up any spilled fuel.

When replacing the fuel cap, turn it clockwise until it clicks. Make sure the cap is fully installed.

⚠ Warning

If a fire starts while you are refueling, do not remove the nozzle. Shut off the flow of fuel by shutting off the pump or by notifying the station attendant. Leave the area immediately.

Caution

If a new fuel cap is needed, be sure to get the right type of cap from your dealer. The wrong type of fuel cap might not fit properly and could damage the fuel tank and emissions system.

Accidental Refueling with Gasoline

Caution

If the vehicle is accidentally refueled with gasoline, do not continue driving the vehicle except to get to a location where it can be stopped safely. Driving the vehicle will damage the fuel system. Have the vehicle towed to a qualified technician to have the gasoline removed from the tank and fuel system. Flush the fuel system with Ultra Low Sulfur Diesel fuel to ensure all gasoline is removed.

Reserve Fuel

No extra supply of fuel for the propulsion of the vehicle or for the operation of accessories shall be carried on any motor vehicle, except in a properly mounted fuel tank or tanks.

Filling a Portable Fuel Container

⚠ Warning

Filling a portable fuel container while it is in the vehicle can cause fuel vapors that can ignite either by static electricity or other means. You or others could be badly burned and the vehicle could be damaged. Always:

- Use approved fuel containers.
- Remove the container from the vehicle, trunk, or pickup bed before filling.

(Continued)

Warning (Continued)

- Place the container on the ground.
- Place the nozzle inside the fill opening of the container before dispensing fuel, and keep it in contact with the fill opening until filling is complete.
- Fill the container no more than 95% full to allow for expansion.
- Do not smoke, light matches, or use lighters while pumping fuel.
- Avoid using electronic devices.

Trailer Towing

General Towing Information

Only use towing equipment that has been designed for the vehicle. Contact your dealer or trailering dealer for assistance with preparing the vehicle to tow a trailer. Read the entire section before towing a trailer.

To tow a disabled vehicle, see *Towing the Vehicle* ⇨ *339*.

Driving Characteristics and Towing Tips

⚠ Warning

You can lose control when towing a trailer if the correct equipment is not used or the vehicle is not driven properly. For example, if the trailer is too heavy or the trailer brakes are inadequate for the load, the vehicle may not stop

(Continued)

Warning (Continued)

as expected. You and others could be seriously injured. The vehicle may also be damaged, and the repairs would not be covered by the vehicle warranty. Pull a trailer only if all the steps in this section have been followed. Ask your dealer for advice and information about towing a trailer with the vehicle.

Driving with a Trailer

Trailering is different than just driving the vehicle by itself. Trailering means changes in handling, acceleration, braking, durability, and fuel economy. Successful, safe trailering takes correct equipment, and it has to be used properly.

The following information has many time-tested, important trailering tips and safety rules. Many of these are

important for your safety and that of your passengers. Read this section carefully before pulling a trailer.

When towing a trailer:

- Become familiar with and follow all state and local laws that apply to trailer towing. These requirements vary from state to state.
- State laws may require the use of extended side view mirrors. Even if not required, you should install extended side view mirrors if your visibility is limited or restricted while towing.
- Do not tow a trailer during the first 800 km (500 mi) of vehicle use to prevent damage to the engine, axle, or other parts.
- It is recommended to perform the first oil change before heavy towing.
- During the first 800 km (500 mi) of trailer towing, do not drive over 80 km/h (50 mph) and do not make starts at full throttle.
- Vehicles can tow in D (Drive). Tow/Haul Mode is recommended for heavier trailers. See *Tow/Haul Mode* ⇨ *225*. If the transmission downshifts too often, a lower gear may be selected using Manual Mode See Manual Mode.

⚠ Warning

To prevent serious injury or death from carbon monoxide (CO), when towing a trailer:

- Do not drive with the liftgate, trunk/hatch, or rear-most window open.
- Fully open the air outlets on or under the instrument panel.
- Adjust the climate control system to a setting that brings in only outside air. See “Climate Control Systems” in the Index.

(Continued)

Warning (Continued)

For more information about carbon monoxide, see *Engine Exhaust* ⇨ *214*.

Towing a trailer requires experience. The combination of the vehicle and trailer is longer and not as responsive as the vehicle itself. Get used to the handling and braking of the combination by driving on a level road surface before driving on public roads.

The trailer structure, the tires, and the brakes must be all be rated to carry the intended cargo. Inadequate trailer equipment can cause the combination to operate in an unexpected or unsafe manner. Before driving, inspect all trailer hitch parts and attachments, safety chains, electrical connectors, lamps, tires, and mirrors. See *Towing Equipment* ⇨ *254*. If the trailer has electric brakes, start the combination moving and then manually apply the trailer brake

controller to check the trailer brakes work. During the trip, occasionally check that the cargo and trailer are secure and that the lamps and any trailer brakes are working.

Following Distance

Stay at least twice as far behind the vehicle ahead as you would when driving without a trailer. This can help to avoid heavy braking and sudden turns.

Passing

More passing distance is needed when towing a trailer. The combination of the vehicle and trailer will not accelerate as quickly and is much longer than the vehicle alone. It is necessary to go much farther beyond the passed vehicle before returning to the lane. Pass on level roadways. Avoid passing on hills if possible.

Backing Up

Hold the bottom of the steering wheel with one hand. To move the trailer to the left, move that hand to the left. To move the trailer to the right, move that hand to the right. Always back up slowly and, if possible, have someone guide you.

Making Turns

Caution

Turn more slowly and make wider arcs when towing a trailer to prevent damage to your vehicle. Making very sharp turns could cause the trailer to contact the vehicle.

Make wider turns than normal when towing, so trailer will not go over soft shoulders, over curbs, or strike road signs, trees, or other objects. Always signal turns well in advance. Do not steer or brake suddenly.

Driving on Grades

Reduce speed and shift to a lower gear before starting down a long or steep downhill grade. If the transmission is not shifted down, the brakes may overheat and result in reduced braking efficiency.

The vehicle can tow in D (Drive). Shift the transmission to a lower gear if the transmission shifts too often under heavy loads and/or hilly conditions.

When towing at higher altitudes, engine coolant will boil at a lower temperature than at lower altitudes. If the engine is turned off immediately after towing at high altitude on steep uphill grades, the vehicle could show signs similar to engine overheating. To avoid this, let the engine run, preferably on level ground, with the transmission in P (Park) for a few minutes before turning the engine off. If the overheat warning comes on, see *Engine Overheating* ⇨ *301*.

Parking on Hills

⚠ Warning

To prevent serious injury or death, always park your vehicle and trailer on a level surface when possible.

When parking your vehicle and your trailer on a hill:

1. Press the brake pedal, but do not shift into P (Park) yet. Turn the wheels into the curb if facing downhill or into traffic if facing uphill.
2. Have someone place chocks under the trailer wheels.
3. When the wheel chocks are in place, gradually release the brake pedal to allow the chocks to absorb the load of the trailer.
4. Reapply the brake pedal. Then apply the parking brake and shift into P (Park).
5. Release the brake pedal.

Leaving After Parking on a Hill

1. Apply and hold the brake pedal.
   - Start the engine.
   - Shift into a gear.
   - Release the parking brake.
2. Let up on the brake pedal.
3. Drive slowly until the trailer is clear of the chocks.
4. Stop and have someone pick up and store the chocks.

Maintenance when Trailer Towing

The vehicle needs service more often when used to tow trailers. See *Maintenance Schedule* ⇨ *354*. It is especially important to check the automatic transmission fluid, engine oil, axle lubricant, belts, cooling system, and brake system before and during each trip.

Check periodically that all nuts and bolts on the trailer hitch are tight.

Engine Cooling When Trailer Towing

The cooling system may temporarily overheat during severe operating conditions. See *Engine Overheating* ⇨ *301*.

Trailer Towing

Caution

Towing a trailer improperly can damage the vehicle and result in costly repairs not covered by the vehicle warranty. To tow a trailer correctly, follow the directions in this section and see your dealer for important information about towing a trailer with the vehicle.

Trailering is different than just driving the vehicle by itself. Trailering means changes in handling, acceleration, braking, durability, and fuel economy. Successful, safe trailering takes correct equipment, and it has to be used properly.

The following information has many time-tested, important trailering tips and safety rules. Many of these are important for your safety and that of your passengers. Read this section carefully before pulling a trailer.

Trailer Weight

⚠ Warning

Never exceed the towing capacity for your vehicle.

Safe trailering requires monitoring the weight, speed, altitude, road grades, outside temperature, dimensions of the front of the trailer, and how frequently the vehicle is used to tow a trailer.

Trailer Weight Ratings

When towing a trailer, the combined weight of the vehicle, vehicle contents, trailer, and trailer contents must be below all of the maximum weight ratings for the vehicle, including:

- GCWR: Gross Combined Weight Rating
- GVWR: Gross Vehicle Weight Rating
- Maximum Trailer Weight Rating
- GAWR-RR: Gross Axle Weight Rating-Rear
- Maximum Trailer Tongue Weight Rating

See Weight-Distributing Hitch Adjustment to determine if equalizer bars are required to obtain the maximum trailer weight rating.

See Trailer Brakes to determine if brakes are required based on your trailer's weight.

The only way to be sure the weight is not exceeding any of these ratings is to weigh the tow vehicle and trailer combination, fully loaded for the trip, getting individual weights for each of these items.

⚠ Warning

You and others could be seriously injured or killed if the trailer is too heavy or the trailer brakes are inadequate for the load. The vehicle may be damaged, and the repairs would not be covered by the vehicle warranty.

Only tow a trailer if all the steps in this section have been followed. Ask your dealer for advice and information about towing a trailer.

Gross Combined Weight Rating (GCWR)

GCWR is the total allowable weight of the completely loaded vehicle and trailer including any fuel, passengers, cargo, equipment, and accessories. Do not exceed the GCWR for your vehicle. The GCWR for the vehicle is on the Tow Rating Chart following.

To check that the weight of the vehicle and trailer are within the GCWR for the vehicle, follow these steps:

- Start with the "curb weight" from the trailering information label
- Add the weight of the trailer loaded with cargo and ready for the trip
- Add the weight of all passengers
- Add the weight of all cargo in the vehicle
- Add the weight of hitch hardware such as a draw bar, ball, load equalizer bars, or sway bars
- Add the weight of any accessories or aftermarket equipment added to the vehicle

The resulting weight cannot exceed the GCWR value shown on the Trailering Information Label.

The gross combined weight can also be confirmed by weighing the truck and trailer on a public scale. The truck and trailer should be loaded for the trip with passengers and cargo.

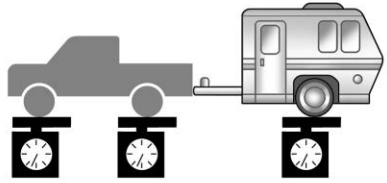

Gross Vehicle Weight Rating (GVWR)

For information about the vehicle's maximum load capacity, see *Vehicle Load Limits* ⇨ *203*. When calculating the GVWR with a trailer attached, the trailer tongue weight must be included as part of the weight the vehicle is carrying.

Maximum Trailer Weight

Use the tow rating chart to determine how much the trailer can weigh, based on the vehicle model and options.

Vehicle	Transmission	Axle Ratio	Maximum Trailer Weight (2)	GCWR *
4500/5500/6500 2WD	Allison 1700	4:10/4:30/4:56/4.88	(1)	11 818 kg (26,000 lb)
4500/5500/650 2WD	Allison 1750	4:10/4:30/4:56/4.88	(1)	16 636 kg (30,000 lb)
6500 2WD	Allison 2700	4:10/4:30/4:56/4.88	(1)	11 818 kg (26,000 lb)
4500/5500/6500 4WD	Allison 1700	4:30	(1)	11 818 kg (26,000 lb)
4500/5500/6500 4WD	Allison 1750	4:30	(1)	16 636 kg (30,000 lb)
6500 4WD	Allison 2700	4:30	(1)	11 818 kg (26,000 lb)

* The Gross Combined Weight Rating (GCWR) is the totally allowable weight of the completely loaded vehicle and trailer including passengers, cargo equipment and conversions. The GCWR for the vehicle should not be exceeded.
(1) Maximum Trailer Weight cannot be provided because total vehicle weight is unknown.
(2) Choose an appropriate hitch and load the truck and trailer within the limits of GCWR, GVWR, and RGAWR.

Trailer Tongue Weight

The trailer tongue weight contributes to the Gross Vehicle Weight (GVW). GVW includes the CURB WEIGHT of your vehicle, any passengers, cargo, equipment and the trailer tongue weight. Vehicle options, passengers, cargo, and equipment reduce the maximum allowable tongue weight the vehicle can carry, which also reduces the maximum allowable trailer weight.

Trailer Load Balance

The correct trailer load balance must be maintained to ensure trailer stability. Incorrect load balance is a leading cause of trailer sway.

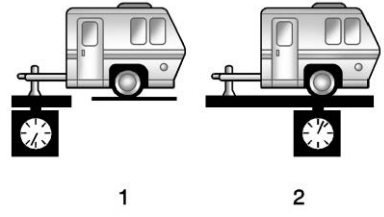

The trailer tongue weight (1) should be 10–15% and fifth-wheel or gooseneck kingpin weight should be 15–25% of the total loaded trailer weight (2). Some specific trailer types, such as boat trailers, fall outside of this range. Always refer to the trailer owner's manual for the recommended trailer tongue weight for each trailer. Never exceed the maximum loads for your vehicle, hitch and trailer.

The trailer load balance percentage is calculated as: weight (1) divided by weight (2) times 100.

After loading the trailer, separately weigh the trailer and then the trailer tongue and calculate the trailer load balance percentage to see if the weights and distribution are appropriate for your vehicle. If the trailer weight is too high, it may be possible to transfer some of the cargo into your vehicle. If the trailer tongue weight is too high or too low, it may be possible to rearrange some of the cargo inside of the trailer.

Do not exceed the maximum allowable tongue weight for your vehicle. Use the shortest hitch extension available to position the hitch ball closer to your vehicle. This will help reduce the effect of the trailer tongue weight on the trailer hitch and the rear axle.

Rear Gross Axle Weight Rating (GAWR-RR)

The GAWR-RR is the total weight that can be supported by the rear axle of the vehicle. Do not exceed the GAWR-RR for the vehicle, with the tow vehicle and trailer fully loaded for the trip including the weight of the trailer tongue. If using a weight-distributing hitch, do not exceed the GAWR-RR before applying the weight distribution spring bars.

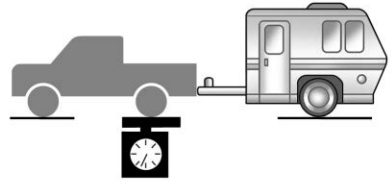

Towing Equipment

Hitches

Always use the correct hitch equipment for your vehicle. Crosswinds, large trucks going by, and rough roads can affect the trailer and the hitch.

Proper hitch equipment for your vehicle helps maintain control of the vehicle-trailer combination. Many trailers can be towed using a weight-carrying hitch which has a coupler latched to the hitch ball, or a tow eye latched to a pintle hook. Other trailers may require a

weight-distributing hitch that uses spring bars to distribute the trailer tongue weight between your vehicle and trailer axles. Fifth-wheel and gooseneck hitches may also be used. See “Trailer Tongue Weight” under *Trailer Towing* ⇨ *250* for weight limits with various hitch types.

Avoid sharp turns when using a step-bumper hitch to prevent damage. Make wider turns to prevent contact between your trailer and your bumper.

Tires

- Do not tow a trailer while using a compact spare tire on the vehicle.
- Tires must be properly inflated to support loads while towing a trailer. See *Tires* ⇨ *325* for instructions on proper tire inflation.

Safety Chains

Always attach chains between the vehicle and the trailer, and attach the chains to the holes on the trailer hitch platform. Instructions about safety chains may be provided by the hitch manufacturer or by the trailer manufacturer.

Cross the safety chains under the tongue of the trailer to help prevent the tongue from contacting the road if it becomes separated from the hitch. Always leave just enough slack so the combination can turn. Never allow safety chains to drag on the ground.

Trailer Brakes

Loaded trailers over 675 kg (1,500 lb) must be equipped with brake systems and with brakes for each axle. Trailer braking equipment conforming to Canadian Standards Association (CSA) requirement CAN3-D313, or its equivalent, is recommended.

State or local regulations may require trailers to have their own braking system if the loaded weight of the trailer exceeds certain minimums that can vary from state to state. Read and follow the instructions for the trailer brakes so they are installed, adjusted, and maintained properly. Never attempt to tap into your vehicle's hydraulic brake system. If you do, both the vehicle anti-lock brakes and the trailer brakes may not function, which could result in a crash.

Auxiliary Battery

If equipped, the vehicle's auxiliary battery can be used to supply electrical power to additional equipment that may be added, such as a slide-in camper.

Locate the auxiliary battery connector under the hood on the driver's side of the vehicle, next to the underhood electrical center. Follow the proper installation instructions included with any electrical equipment that is installed.

Caution

To prevent draining the auxiliary battery, always turn off electrical equipment when not in use and do not use any equipment that

(Continued)

Caution (Continued)
may exceed the maximum amperage rating of 30 amps.

Trailer Wiring Harness

Basic Trailer Wiring

Heavy-Duty Trailer Wiring Harness Package

If equipped, the trailer wiring harness, with a 7-pin connector and a 4-pin connector, is mounted on the frame at the rear of the vehicle.

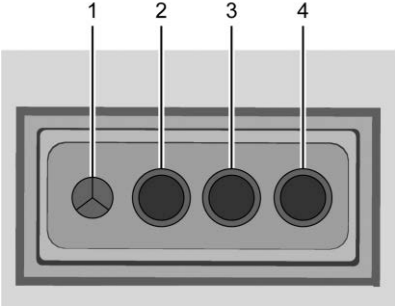

1. Ground
2. Tail Lamps
3. Left Turn/Brake
4. Right Turn/Brake

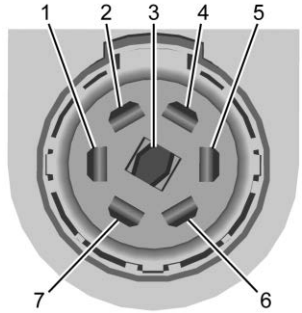

1. Left Turn/Brake
2. Tail Lamps
3. Reverse Lamps
4. Battery Feed
5. Right Turn/Brake
6. Electric Brakes
7. Ground

Use only a round, seven-wire connector with flat blade terminals meeting SAE J2863 specifications for proper electrical connectivity.

The seven-wire harness contains the following trailer circuits:

Stop/Turn Signal Left	Yellow/Blue
Stop/Turn Signal Right	Green/Brown
Tail/Parking Lamps	Gray/Brown
Reverse Lamps	White/Green
Battery Feed	Red/Violet
Ground	Black
Electric Trailer Brake	Blue

Electric Brake Control Wiring Provisions

If the vehicle is not equipped with an integrated trailer brake controller, and the trailer has electric brakes, a trailer brake controller needs to be installed on the vehicle. The brake

controller should be installed by your dealer or a qualified service center.

If equipped, wiring provisions for an aftermarket electric trailer brake controller are included with the vehicle as part of the trailer wiring package. The harness contains the following circuits:

Electric Trailer Brakes	Blue
Battery Feed	Red/Black or Red/Blue
Brake Apply Signal	White/Blue
Ground	Black

It will be necessary to have a technician connect the 12-volt power to the engine compartment fuse block.

Refer to the aftermarket electric trailer brake controller owner's manual to determine wire color coding of the electric trailer brake controller. The wire colors on the brake controller may be different from the vehicle.

Trailer Lamps

Always check all trailer lamps are working at the beginning of each trip, and periodically on longer trips.

Turn Signals When Towing a Trailer

When properly connected, the trailer turn signals should will illuminate to indicate the vehicle is turning, changing lanes, or stopping. When towing a trailer, the arrows on the instrument cluster will illuminate even if the trailer is not properly connected or the bulbs are burned out.

Tow/Haul Mode

For instructions on how to enter Tow/Haul mode, see *Tow/Haul Mode* ⇨ *225*.

Tow/Haul assists when pulling a heavy trailer or a large or heavy load.

Tow/Haul Mode is designed to be most effective when the vehicle and trailer combined weight is at least 75% of the vehicle's Gross Combined Weight Rating (GCWR). See “Weight of the Trailer” under *Trailer Towing* ⇨ *250*.

Tow/Haul Mode is most useful when towing a heavy trailer or carrying a large or heavy load:

- through rolling terrain
- in stop-and-go traffic
- in busy parking lots

Operating the vehicle in Tow/Haul Mode when lightly loaded or not towing will not cause damage; however, it is not recommended and may result in unpleasant engine and transmission driving characteristics and reduced fuel economy.

Integrated Trailer Brake Control System

The vehicle may have an Integrated Trailer Brake Control (ITBC) system for use with electric trailer brakes or most electric over hydraulic trailer

brake systems. These instructions apply to both types of electric trailer brakes.

This symbol is on the Trailer Brake Control Panel on vehicles with an ITBC system. The power output to the trailer brakes is proportional to the amount of vehicle braking. This available power output to the trailer brakes can be adjusted to a wide range of trailering situations.

The ITBC system is integrated with the vehicle’s anti-lock brake system. In trailering conditions that cause the vehicle’s anti-lock brake system to activate, power sent to the trailer's brakes will be automatically adjusted to minimize trailer wheel lock-up. This does not imply that the trailer has anti-lock brakes.

If the vehicle’s brake or anti-lock brake systems are not functioning properly, the ITBC system may not function fully or at all. Make sure all of these systems are fully operational to allow the ITBC system to function properly.

The ITBC system is powered through the vehicle's electrical system. Turning the ignition off will also turn off the ITBC system. The ITBC system is fully functional only when the ignition is in ON/RUN.

⚠ Warning

Connecting a trailer that has an air brake system may result in reduced or complete loss of trailer braking, including increased stopping distance or trailer instability which could result in serious injury, death, or property damage. Only use the ITBC system with electric or electric over hydraulic trailer brake systems.

Trailer Brake Control Panel

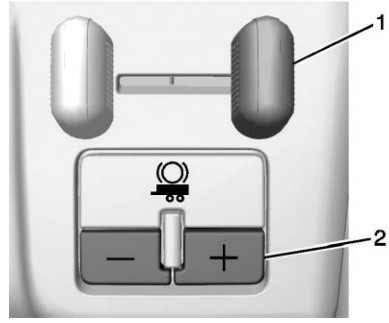

1. Manual Trailer Brake Apply Lever
2. Trailer Gain Adjustment Buttons

The ITBC control panel is on the instrument panel to the left of the steering column. See *Instrument Panel* ⇨ *6*. The control panel allows adjustment to the amount of output, referred to as Trailer Gain, available to the trailer brakes and allows manual application of the trailer brakes. Use the ITBC control panel

and the DIC trailer brake display page to adjust and display power output to the trailer brakes.

Trailer Brake DIC Display Page

The ITBC display page indicates

- Trailer Gain setting
- Output to the trailer brakes
- Trailer connection
- System operational status

To display

- Scroll through the DIC menu pages
- Press a Trailer Gain (+) or (-) button
- Activate the Manual Trailer Brake Apply Lever

TRAILER GAIN:

Press a Trailer Gain button to recall the current Trailer Gain setting. Each press and release of the gain buttons will then change the Trailer Gain setting. Press the Trailer Gain (+) or (-) to adjust. Press and hold to continuously adjust the Trailer Gain. To turn the output to the trailer off, adjust the Trailer Gain setting to 0.0. This setting can be adjusted from 0.0 to 10.0 with a trailer connected or disconnected.

TRAILER OUTPUT: This displays anytime a trailer with electric brakes is connected. Output to the trailer brakes is based on the amount of vehicle braking present and relative to the Trailer Gain setting. Output is displayed from 0 to 100% for each gain setting.

The Trailer Output will indicate “- - - - - -” on the Trailer Brake Display Page whenever the following occur:

- No trailer is connected
- A trailer without electric brakes is connected (no DIC message will display)
- A trailer with electric brakes has become disconnected, a CHECK TRAILER WIRING message displays on the DIC
- There is a fault present in the wiring to the trailer brakes, a CHECK TRAILER WIRING message displays on the DIC
- The ITBC system is not working due to a fault, a SERVICE TRAILER BRAKE SYSTEM message displays in the DIC

Manual Trailer Brake Apply Lever

Slide this lever left to apply the trailer’s electric brakes independent of the vehicle’s brakes. Use this lever to adjust Trailer Gain to achieve the proper power output to the trailer brakes. The trailer's and the vehicle's brake lamps will come on when either vehicle brakes or manual trailer brakes are applied and properly connected.

Trailer Gain Adjustment Procedure

Trailer Gain should be set for a specific trailering condition and it must be readjusted anytime vehicle loading, trailer loading, or road surface conditions change.

⚠ Warning

Trailer brakes that are over-gained or under-gained may not stop the vehicle and the trailer as intended and can result in a crash. Always follow the instructions to set the Trailer Gain for the proper trailer stopping performance.

To adjust Trailer Gain for each towing condition:

1. Drive the vehicle with the trailer attached on a level road surface representative of the towing condition and free of traffic at about 32 to 40 km/h (20 to 25 mph) and fully apply the Manual Trailer Brake Apply Lever.

Note

Adjusting Trailer Gain at speeds lower than 32 to 40 km/h (20 to 25 mph) may result in an incorrect gain setting.

2. Adjust the Trailer Gain, using the Trailer Gain (+) or (-) adjustment buttons, to just below the point of trailer wheel lock-up, indicated by trailer wheel squeal or tire smoke when a trailer wheel locks.

Note

Trailer wheel lock-up may not occur if towing a heavily loaded trailer. In this case, adjust the Trailer Gain to the highest allowable setting for the towing condition.

3. Readjust Trailer Gain anytime vehicle loading, trailer loading, or road surface conditions change or if trailer wheel lock-up is noticed at any time while towing.

Other ITBC-Related DIC Messages

TRAILER CONNECTED: This message will briefly display when a trailer with electric brakes is first connected to the vehicle. This message will automatically turn off in about 10 seconds. This message can be acknowledged before it automatically turns off.

CHECK TRAILER WIRING: This message will display if:

- The ITBC system first determines connection to a trailer with electric brakes and then the trailer harness becomes disconnected the vehicle.

  If the disconnect occurs while the vehicle is stationary, this message will automatically turn off in about 30 seconds. This message will also turn off if it is acknowledged or if the trailer harness is reconnected.

  If the disconnect occurs while the vehicle is moving, this message will continue until the ignition is turned off. This message will also turn off if it is acknowledged or if the trailer harness is reconnected.

- There is an electrical fault in the wiring to the trailer brakes. This message will continue as long as there is an electrical fault in the trailer wiring. This message will also turn off if it is acknowledged.

To determine whether the electrical fault is on the vehicle side or trailer side of the trailer wiring harness connection:

1. Disconnect the trailer wiring harness from the vehicle.
2. Turn the ignition off.
3. Wait 10 seconds, then turn the ignition back to RUN.
4. If the CHECK TRAILER WIRING message reappears, the electrical fault is on the vehicle side.

   If the CHECK TRAILER WIRING message only reappears when connecting the trailer wiring harness to the vehicle, the electrical fault is on the trailer side.

SERVICE TRAILER BRAKE SYSTEM: This message will display when there is a problem with the ITBC system. If this message continues over multiple ignition cycles, have the vehicle serviced.

If either the CHECK TRAILER WIRING or SERVICE TRAILER BRAKE SYSTEM message displays while driving, the ITBC system may not be fully functional or may not function at all. When traffic conditions allow, carefully pull the vehicle over to the side of the road and turn the ignition off. Check the wiring connection to the trailer and turn the ignition back on. If either of these messages continues, either the vehicle or trailer needs service.

A GM dealer may be able to diagnose and repair problems with the trailer. However, any diagnosis and repair of the trailer is not covered under the vehicle warranty. Contact your trailer dealer for assistance with trailer repairs and trailer warranty information.

Aftermarket Electronic Trailer Sway Control Devices

Some trailers may come equipped with an electronic device designed to reduce or control trailer sway. Aftermarket equipment manufacturers also offer similar devices that connect to the wiring between the trailer and the vehicle. These devices may interfere with the vehicle's trailer brake systems or other systems, including integrated anti-sway systems, if equipped. Messages related to trailer connections or trailer brakes could appear on the DIC. The effects of these aftermarket devices on vehicle handling or trailer brake performance is not known.

⚠ Warning

Use of aftermarket electronic trailer sway control devices could result in reduced trailer brake performance, loss of trailer brakes, or other malfunctions, and result in a crash. You or others could be seriously injured or killed. Before using one of these devices:

- Ask the device or trailer manufacturer if the device has been thoroughly tested

(Continued)

Warning (Continued)

for compatibility with the make, model, and year of your vehicle and any optional equipment installed on your vehicle.

- Before driving, check the trailer brakes are working properly, if equipped. Drive the vehicle with the trailer attached on a level road surface that is free of traffic at about 32-40 km/h (20-25 mph) and fully apply the manual trailer brake apply lever. Also, check the trailer brake lamps and other lamps are functioning correctly.
- If the trailer brakes are not operating properly at any time, or if a DIC message indicates problems with the trailer connections or trailer brakes, carefully pull the

(Continued)

Warning (Continued)

vehicle over to the side of the road when traffic conditions allow.

Trailer Tires

Special Trailer (ST) tires differ from vehicle tires. Trailer tires are designed with stiff sidewalls to help prevent sway and to support heavy loads. These features can make it difficult to determine if the trailer tire pressures are low only based on a visual inspection.

Always check all trailer tire pressures before each trip when the tires are cool. Low trailer tire pressure is a leading cause of trailer tire blow-outs.

Trailer tires deteriorate over time. The trailer tire sidewall will show the week and year the tire was manufactured. Many trailer tire manufacturers recommend replacing tires more than six years old.

Overloading is another leading cause of trailer tire blow-outs. Never load your trailer with more weight than the tires are designed to support. The load rating is located on the trailer tire sidewall.

Always know the maximum speed rating for the trailer tires before driving. This may be significantly lower than the vehicle tire speed rating. The speed rating may be on the trailer tire sidewall. If the speed rating is not shown, the default trailer tire speed rating is 105 km/h (65 mph).

Conversions and Add-Ons

Add-On Electrical Equipment

⚠ Warning

The Data Link Connector (DLC) is used for vehicle service and Emission Inspection/Maintenance testing. See *Malfunction Indicator Lamp (Check Engine Light)* ⇨ *112*. A device connected to the DLC — such as an aftermarket fleet or driver-behavior tracking device — may interfere with vehicle systems. This could affect vehicle operation and cause a crash. Such devices may also access information stored in the vehicle's systems.

Caution

Some electrical equipment can damage the vehicle or cause components to not work and would not be covered by the vehicle warranty. Always check with your dealer before adding electrical equipment.

Add-on equipment can drain the vehicle's 12-volt battery, even if the vehicle is not operating.

The vehicle has an airbag system. Before attempting to add anything electrical to the vehicle, see *Servicing the Airbag-Equipped Vehicle* ⇨ *67* and *Adding Equipment to the Airbag-Equipped Vehicle* ⇨ *67*.

For information on wiring auxiliary switches, see www.gmupfitter.com or contact your dealer.

Adding a Snow Plow or Similar Equipment

Caution

Do not exceed 72 km/h (45 mph) with a snow plow mounted to the vehicle. The vehicle could overheat and be damaged.

Before installing a snow plow on the vehicle, follow these guidelines:

Caution

If the vehicle does not have the snow plow prep package, RPO VYU, adding a plow can damage the vehicle, and the repairs would not be covered by the vehicle warranty. Unless the vehicle was built to carry a snow plow, do not add one to the vehicle. If the vehicle has RPO VYU, then the payload the vehicle can carry will be reduced when a snow plow is

(Continued)

Caution (Continued)

installed. The vehicle can be damaged if either the front or rear axle ratings or the Gross Vehicle Weight Rating (GVWR) are exceeded.

The plow the vehicle can carry depends on many things, such as:

- The options the vehicle came with, and the weight of those options.
- The weight and number of passengers to be carried.
- The weight of items added to the vehicle, like a tool box or truck cap.
- The total weight of any additional cargo to be carried.

For example, if the snow plow weighs 318 kg (700 lb), the total weight of all occupants and cargo inside the cab should not exceed 135 kg (300 lb). This means that you may only be able to carry one passenger. Even this may be too much if there is other equipment already adding to the weight of the vehicle.

To safely carry a snow plow on the vehicle:

- Follow all aftermarket snow plow manufacturer's instructions for the operation and transportation of the snow plow.
- With a snow plow attached, the engine coolant temperature gauge may show a higher temperature than while driving without one. The snow plow could block the airflow to the radiator. This could be more noticeable as vehicle speed increases. At speeds above 72 km (45 mph), this may cause the engine coolant to overheat.
- To increase the airflow, move the snow plow blade postion.
- If driving more than 24 km (15 mi), angle the plow blade position.
- Make sure the weight on the front and rear axles does not exceed the axle rating for each.
- For the front axle, if more cargo or passengers must be carried, appropriate counter ballast must be installed rear of the rear axle. Counter ballast must be properly secured so it will not move during driving.
- Rear ballast may be required to ensure a proper front and rear weight distribution ratio, even though the actual weight at the front axle may be less than the front axle rating.
- The snow plow manufacturer or installer can assist in determining the amount of rear ballast required, to help make sure the snow plow/vehicle combination does not exceed the GVW rating, the front and rear axle ratings, and the front and rear weight distribution ratio.
- The total vehicle must not exceed the GVW rating.

Front axle reserve capacity is the difference between the Gross Axle Weight Rating (GAWR) and the front axle weight of the vehicle with full fuel and passengers. This is the amount of weight that can be added to the front axle before reaching the front GAWR.

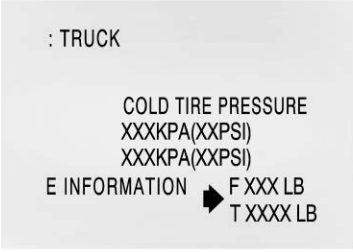

United States

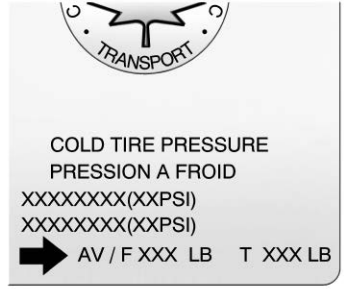

Canada

The front axle reserve capacity for the vehicle is in the lower right corner of the Certification/Tire label.

To calculate the amount of weight any front accessory, such as a snow plow, is adding to the front axle, use this formula:

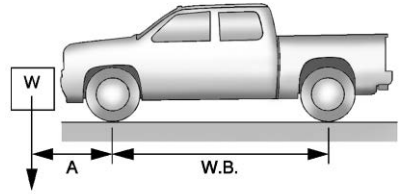

(W x (A + W.B.)) /W.B.= Weight the accessory is adding to the front axle.

Where:

W = Weight of added accessory
A = Distance that the accessory is in front of the front axle
W.B. = Vehicle Wheelbase

For example, adding a 318 kg (700 lb) snow plow actually adds more than 318 kg (700 lb) to the front axle. Using the formula, if the snow plow is 122 cm (4 ft) in front of the front axle and the wheelbase is 305 cm (10 ft), then:

W = 318 kg (700 lb)
A = 122 cm (4 ft)

W.B. = 305 cm (10 ft)

(W x (A + W.B.)/W.B. =
(318 x (122 + 305))/305 = 445 kg
(980 lb)

This means if the front axle reserve capacity is more than 445 kg (980 lb), the snow plow could be added without exceeding the front GAWR.

Heavier equipment can be added on the front of the vehicle if less cargo or fewer passengers are carried, or by positioning cargo toward the rear. This reduces the load on the front. However, the front GAWR, rear GAWR, and Gross Vehicle Weight Rating (GVWR) must never be exceeded.

⚠ Warning

On some vehicles that have certain front mounted equipment, such as a snow plow, it may be possible to load the front axle to the front Gross Axle Weight Rating (GAWR) but not have

(Continued)

Warning (Continued)

enough weight on the rear axle to have proper braking performance. If the brakes cannot work properly, the vehice could crash. Always follow the snow plow manufacturer or installer's recommendation for rear ballast to ensure a proper front and rear weight distribution ratio. Maintaining a proper front and rear weight distribution ratio is necessary to provide proper braking performance.

Total vehicle reserve capacity is the difference between the GVWR and the weight of the truck with full fuel and passengers. It is the amount of weight that can be added to the vehicle before reaching the GVWR. Reserve capacity numbers are intended as a guide when selecting the amount of equipment or cargo the truck can carry. If unsure of the vehicle's front, rear, or total weight, go to a weigh station and weigh the vehicle. Your dealer can also help with this.

The total vehicle reserve capacity for the vehicle is in the lower right corner of the Certification/Tire label as shown previously.

See your dealer for additional advice and information about using a snow plow on the vehicle. Also, see *Vehicle Load Limits* ⇨ *203*.

Emergency Roof Lamp Provisions

Vehicles with the RPO VYU snow plow prep package also have an emergency roof lamp provision package, RPO TRW. Wiring for the emergency roof lamp is provided above the overhead console. See *Auxiliary Roof-Mounted Lamp* ⇨ *134* for switch location.

Power Take-Off (PTO)

If equipped, the Power Take-Off (PTO) is a GM Upfitter integrated system that is used to create an auxiliary power source for running

add-on equipment, such as salt spreaders, snow plows, winches, and lift buckets. The PTO system controls engine speed to values higher than normal base idle, PTO load relay engagement, and remote starting and shutdown of the engine.

When installing PTO aftermarket equipment, the PTO wiring and operation recommendations provided by the service manual and GM Upfitter documentation must be strictly followed.

Refer to the bulletins in the Upfitter Integration website www.gmupfitter.com for the Power Take Off (PTO) operating description and application guide.

⚠ Warning

Engine exhaust contains Carbon Monoxide (CO), which cannot be seen or smelled. Exposure to CO can cause unconsciousness or even death. Never operate PTO in an enclosed area such as a

(Continued)

Warning (Continued)

garage or building that has no fresh air ventilation. See *Engine Exhaust* ⇨ *214*.

Caution

If the key is in the ignition during Remote PTO operation, the vehicle can be shifted out of P (Park). Even though PTO will be disengaged, depending on PTO Upfitter application, personal injury or property damage may result from vehicle movement. Always remove the key from the ignition before operating Remote PTO.

Primary PTO Operating Modes

PTO modes of operation are:

- **Preset**

  Stationary operation only: In-cab control is standard, remote control is available.

- **Variable**

  Stationary operation only: In-cab control is standard, remote control is available.

- **Mobile**

  In-cab control only.

- **Operator Selectable In-Cab Mode (OSIM)**

  OSIM is for in-cab operation only.

  OSIM is for vehicles that require both stationary and mobile modes. OSIM is available via the GM Service Tool only. During the configuration of OSIM, two modes must be paired. The options for pairing are: stationary preset and mobile, or stationary variable and mobile. During activation of OSIM, the operator must select one of the two modes within the pre-configured pairing. If an OSIM mode is not selected, PTO will not operate.

OSIM modes of operation are:

- Stationary

  For stationary mode, the configuration may be stationary preset or stationary variable.

- Mobile

  For mobile mode, the configuration is variable only.

  Selection between OSIM pairings is not available.

  Remote modes are not available.

The factory default programming enables in-cab control. For stationary modes, a GM Service Tool can reprogram the system to allow for remote control and disable the in-cab control.

All PTO modes provide for engine rpm control and PTO load relay control.

All PTO modes provide for safety interlocks for PTO load disengagement.

Remote PTO modes provide for remote engine starting and shutdown.

Stationary in-cab and Remote PTO modes provide for engine shutdown due to critical engine conditions, as well as a timed engine shutdown feature. For emergency vehicle applications, engine shutdown due to critical engine conditions and the timer based feature is not available.

Preset PTO

Preset Enable Conditions – In-Cab Operation

To enable PTO:

1. With the engine running, shift the vehicle into P (Park) and set the parking brake. Do not press the brake pedal.
2. Confirm that cruise control is off.
3. Press and release the PTO in-cab switch below the climate controls in the center stack. The PTO indicator light will blink rapidly until the PTO load relay becomes engaged and will then be on steady. The engine will advance to the PTO Standby Speed.
4. Once the PTO Standby Speed is reached, use SET− and +RES on the cruise control to reach the Set 1 or Set 2 PTO engine speeds.

   The accelerator pedal is disabled and cannot be used to override the PTO preset speeds.

Factory Default PTO Engine Speeds	
Standby	900 rpm
Set 1 (SET−)	1200 rpm
Set 2 (+RES)	1900 rpm

The first time a vehicle is used for PTO:

1. The PTO Control setting on the GM Service Tool is programmed to Interior Mode PTO Switch.

2. Check the correct operation of the default PTO preset stationary mode to observe the three idle up speeds. The PTO function should be confirmed before any wiring modifications are done or any reprogramming is attempted. See your dealer if the default presets are not functioning properly.
3. The PTO indicator light will not initially reflect the status of the PTO load until the PTO load relay is wired into the system. The PTO load relay output is enabled as a factory default. When the PTO indicator light is either blinking or on solid, the PTO relay output will be activated.

Preset Enable Conditions – Remote Operation

This requires programming with the GM Service Tool and remote switch panel provided by GM Upfitter.

1. Confirm that cruise control is off.
2. Set the parking brake and shift the transmission into P (Park).
3. Turn the engine off. Remove or place the key in the ignition off position. Lock the vehicle, if desired.
4. Confirm the hood is closed.
5. From outside the vehicle, press and release the Remote PTO Arm switch.
6. Within five seconds, open and close the Remote PTO Engine Start/Shutdown switch.
7. The horn will chirp, and then engine starting will be automatically initiated. The PTO system will then elevate engine rpm to PTO Standby Speed and engage the PTO load relay.
8. The Remote PTO Set switch can now be used to accomplish the PTO Set 1 and Set 2 engine speeds.

   The accelerator pedal is disabled when Remote PTO operation is selected.

Preset Enable Conditions – Remote Operation In-Cab Enable

This requires programming with the GM Service Tool and remote switch panel provided by GM Upfitter.

Starting remote operation in-cab:

1. With the engine running, shift the vehicle into P (Park), release the brake pedal, and set the parking brake.
2. Confirm that cruise control is off.
3. Confirm the hood is closed.
4. Press and release the in-cab PTO switch.
5. The horn will chirp, the PTO load relay will engage, and the engine will advance to the PTO Standby Speed.
6. The Remote PTO Set switch may be used to select PTO Set 1 and Set 2 engine speeds.

The accelerator pedal is disabled when Remote PTO operation is selected.

The operator may exit the vehicle.

⚠ Warning

If the key is in the ignition during Remote PTO operation, the vehicle can be shifted out of P (Park) by an unauthorized operator. Even though PTO will be disengaged, depending on PTO Upfitter application, personal injury or property damage may result from vehicle movement. The operator must ensure that the vehicle is secured against unauthorized access during Remote PTO operation.

Remote PTO operation may be ended by pressing the brake pedal at which time the PTO load relay disengages and the engine returns to base idle speed. The vehicle may be driven after the parking brake is released.

Preset Enable Conditions – Operator Selectable In-Cab Mode (OSIM)

This requires programming with the GM Service Tool and requires pairing OSIM stationary preset with OSIM mobile mode. If OSIM pairing has been configured, initiate OSIM preset operation:

1. With the engine running, shift the vehicle into P (Park) and release the brake pedal, and set the parking brake.
2. Confirm cruise control is off.
3. Confirm the hood is closed.
4. Press and release the in-cab PTO switch. The PTO indicator light will blink slowly.
5. Within 10 seconds, press and release SET− on the cruise control.
6. The PTO indicator light will change to solid when the PTO load relay becomes engaged. The engine speed will advance to the PTO Standby Speed. Press and release SET− on the cruise control to select the PTO Set 1 speed. Press and release +RES on the cruise control to select the PTO Set 2 speed.

- The PTO load relay engages immediately when the PTO operation is initiated by the switch input. The transmission torque converter is unlocked. The torque converter will lock upon reaching stable PTO Standby Speed (default = 900 rpm) so maximum power is available.
- The first elevated engine speed, PTO Standby Speed, is not intended as a working speed but as a verification that the system is active and ready to go to a working speed. This speed can be modified to a working speed with the GM Service Tool. The upper limit for PTO Standby Speed is 1500 rpm.
- The remote switches and relay connections are made at the PTO Upfitter Connector located on the chassis frame behind the cab.

- The PTO Control setting on the Service Tool must be programmed to Remote PTO Mode Switch before the remote switches can be used.
- The PTO relay is programmed to be enabled in the factory default configuration.
- Refer to the service manual or go to the Upfitter Integration website www.gmupfitter.com for details, advanced programming features, and usage with a removable pendant.

Variable PTO

Variable Enable Conditions – In-Cab Operation

To enable PTO:

1. With the engine running, shift the vehicle into P (Park) and set the parking brake. Do not press the brake pedal.
2. Press and release the PTO in-cab switch below the climate controls in the center stack. The PTO indicator light will blink rapidly until the PTO load relay becomes engaged and will then be on steady. The engine will advance to the PTO Standby Speed.
3. Once PTO Standby Speed is reached, SET− and +RES on the cruise control can be used to tap up and tap down the engine speed. Factory setting for the tap step is 100 rpm and the setting for the ramp rate is 150 rpm/sec. The GM Service Tool can enable the capability to change the default value for tap step via the Radio Customization menu. The default values for both tap step and ramp rate can be changed with the GM Service Tool. The accelerator pedal is disabled, and cannot be used to control PTO engine speed.

Variable Enable Conditions – Remote Operation

This requires programming with the GM Service Tool and the appropriate remote switch panel provided by GM Upfitter.

1. Confirm that cruise control is off.
2. Set the parking brake and shift the transmission into P (Park).
3. Turn the engine off. Remove or place the key in the ignition off position. Lock the vehicle, if desired.
4. The hood must be closed.
5. From outside the vehicle, press and release the Remote PTO Arm switch.
6. Within five seconds, open and close the Remote PTO Engine Start/Shutdown switch.
7. The horn will chirp, and then engine starting will be automatically initiated. The PTO system will then elevate engine rpm to PTO Standby Speed and engage the PTO load relay.

Variable Enable Conditions – Remote Operation In-Cab Enable Starting Remote Operation from In-Cab

This requires programming with the GM Service Tool and remote switch panel provided by GM Upfitter.

1. With the engine running, shift the vehicle into P (Park), release the brake pedal, and set the parking brake.
2. Confirm cruise control is off.
3. Confirm the hood is closed.
4. Press and release the PTO in-cab switch.
5. The horn will chirp, the PTO load relay will engage, and the engine will advance to the PTO Standby Speed.

The operator may exit the vehicle.

⚠ Warning

If the key is in the ignition during Remote PTO operation, the vehicle can be shifted out of P (Park) by an unauthorized operator. Even though PTO will be disengaged, depending on PTO Upfitter application, personal injury or property damage may result from vehicle movement. The operator must ensure that the vehicle is secured against unauthorized access during Remote PTO operation.

The accelerator pedal is disabled when Remote PTO operation is selected.

Remote PTO operation can be ended by pressing the brake pedal. The PTO load relay disengages and the engine returns to base idle speed. The vehicle may be driven after the parking brake is released.

- The desired engine operating speed can now be accomplished. Two versions of engine rpm control are available, switches or potentiometer, depending on which one was installed.
  - Switches – the Remote PTO Set and Resume switches can be used to tap up and tap down to the desired engine speed.
  - Potentiometer – a Remote PTO Throttle Potentiometer can be used as a continuous variable throttle control to dial in the desired engine speed.

Variable Enable Conditions – OSIM

This requires programming with the GM Service Tool and specific pairing of stationary variable and mobile modes. Remote operation is not available.

If OSIM pairing has been configured, initiate OSIM stationary variable operation:

1. With the engine running, shift the vehicle into P (Park), release the brake pedal, and set the parking brake.
2. Confirm cruise control is off.
3. Confirm the hood is closed.
4. Press and release the PTO in-cab switch. The PTO indicator light will blink slowly.
5. Within 10 seconds, press and release SET− on the cruise control. The PTO load relay will engage and the PTO indicator light will change to solid. The engine speed will advance to the PTO Standby Speed.
6. The desired operating speed may be achieved by tapping up and down with +RES and SET − on the cruise control.

- The PTO load relay engages immediately when the PTO operation is initiated by the switch input. The transmission torque converter is unlocked. The torque converter will lock upon reaching stable PTO Standby Speed (default = 900 rpm) so maximum power is available.
- The first elevated engine speed, PTO Standby Speed, is not intended as a working speed but as a verification that the system is active and ready to go to a working speed.
- The relay connections are made at the PTO Upfitter Connector located on the chassis frame behind the cab.
- The engine speeds can be adjusted between the low of PTO Standby Speed and the high of PTO Max Engine speed limits. Both values can be modified from the factory default settings with the GM Service Tool. Based on the value chosen for PTO Max Engine Speed, the PTO menu in the center stack may show speeds that are not available.
- Factory setting for the tap step is 100 rpm and the setting for ramp rate is 150 rpm/sec. The default value for tap step can be modified via the Radio Customization menu. The default values for both tap step and ramp rate can be changed with the GM Service Tool.
- The PTO load relay is enabled as the factory default programmed setting.
- Refer to the service manual or go to the GM Upfitter Integration website www.gmupfitter.com for details.

Mobile PTO

Mobile Enable Conditions – In-Cab Operation Only

This requires programming with the GM Service Tool.

1. The engine must be running.
2. The parking brake must be released.
3. Confirm that cruise control is off.

4. Engine rpm must be less than 1500 rpm.
5. Shift the transmission to M1, M2, or M3.
6. Tap the brake pedal and then do not press the brake pedal.
7. Keep the driver door closed. The driver door can be kept open if reconfigured using the GM Service Tool. See www.gmupfitter.com.
8. Press and release the PTO in-cab switch below the climate controls in the center stack. Then within 10 seconds press and release +RES on the cruise control. The PTO indicator light will blink slowly between presses. The PTO indicator light will then blink rapidly until the PTO load becomes engaged, and then come on steady. The engine speed will remain at the current throttle setting or advance to PTO Standby Speed, whichever value is greater. If the engine rpm is above 1500 rpm, the PTO relay will not engage until the engine rpm drops below 1500 rpm.
9. Once engaged, if additional engine speed is desired, use either the cruise control or the accelerator pedal to temporarily adjust the engine speed.
   - +RES on the cruise control can be used to tap up, or if continuously held to ramp up, to the desired operating speed. SET− on the cruise control can be used to tap down or coast down if continuously held to the desired engine speed. Top limit is PTO Max Engine Speed, default 2100 rpm and programmable to 2900 rpm. Lower limit is PTO Standby Speed, default 900 rpm with program range from base idle to 900 rpm.
   - The accelerator pedal can be used to achieve the desired speed. When the desired speed is reached, SET− on the cruise control would be used to capture and maintain that speed. Normal tap up and tap down can then be used to fine tune the setting.

In Mobile PTO mode, the vehicle speed achieved is the result of the current engine speed requested and the transmission gear range selected. When the vehicle is placed in M2 or M3, the vehicle will upshift according to engine rpm set point, and vehicle speed will increase. To prevent upshifts and maintain lower vehicle speeds, place the vehicle in M1.

Mobile Enable Conditions – Operator Selectable In-Cab Mode (OSIM)

This requires programming with the GM Service Tool and specific pairing mobile mode with either stationary preset or variable. Remote operation is not available.

See “Mobile PTO” previously in this section.

PTO System Disengage Conditions

Preset or Variable Stationary Modes – In-Cab Operation

To disengage PTO, do one of the following:

- Press the brake pedal. The engine returns to base idle, but the PTO load relay remains engaged. The PTO indicator light will blink slowly indicating that a PTO set speed is still stored in memory. Upon releasing the brake, the factory default programming is for the engine speed to remain at curb idle. A press and release of +RES on the cruise control will restore engine rpm to the last PTO set speed. The PTO system can also be programmed to return engine rpm to the PTO Standby Speed setting.
- Press on the cruise control. The engine returns to base idle, but the PTO load relay remains engaged. The PTO indicator light will blink slowly indicating that a PTO set speed is still stored in memory. Activating +RES on the cruise control will restore engine rpm to the last PTO set speed.
- Press and release the PTO in-cab switch. The PTO load relay disengages and the engine returns to base idle. The PTO indicator light will turn off, indicating the PTO load relay is disengaged and the stored set speed has been cleared from memory.

Stationary Modes (Preset or Variable) – Remote Control

To disengage PTO:

- Open the Remote PTO Engine Start/Shutdown switch. Load relay disengages and the engine will stop.
- If equipped, press the PTO Emergency Stop switch. Load relay disengages and the engine will stop. Refer to the bulletins in the Upfitter Integration website www.gmupfitter.com for the Power Take Off (PTO) operating description and application guide.
- With the key in the ignition and rotated to the RUN position, press the brake pedal. The PTO load relay disengages and the engine returns to base idle speed. The vehicle may be driven.

Stationary Modes will also disengage if:

- Vehicle movement is detected.
- The parking brake is released.
- The transmission is shifted out of P (Park).
- The ignition is cycled from on to off.
- The PTO feedback signal is lost indicating the load is disengaged if used. See www.gmupfitter.com.
- Cruise control becomes enabled.
- There is a timed auto-engine shutdown: This feature will shut down the engine automatically

after a predefined time. PTO must be operational for this function to be active. This feature is not available for emergency vehicle applications.

- There is an engine shutdown based on critical engine or PTO system fault conditions: This feature will shut down the engine when PTO is operating if a critical engine condition such as low oil, low oil pressure, hot engine, hot transmission, low fuel, or Diesel Particulate Filter regeneration is detected by the vehicle system. If PTO operation is continued when critical engine conditions are present, a horn chirp warning will occur after 30–60 seconds. The engine will shut down two minutes after the horn warning. The engine can be restarted with the ignition key or with the Remote PTO engine start controls. The horn warning and engine shutdown will again occur if the critical engine condition is still present. This feature is not available for emergency vehicle applications.

Resume memory speed is cleared for the above actions.

When Remote PTO engine starting has been initialized with the ignition key in the RUN position, the shift lever will remain locked if the brake pedal is pressed and a shift from P (Park) is attempted while the engine is running and PTO is active (standby mode). A shift out of P (Park) will not be allowed until one of the following actions is taken by the vehicle operator:

- Press the Remote PTO Engine Start/Shutdown switch.
- Press the PTO in-cab switch (only if the PTO in-cab Remote Start/Stop feature is enabled). This requires programming with the GM Service Tool.
- Press on the cruise control.
- Release the parking brake.

Mobile Mode

To disengage PTO:

- Press the brake pedal. The PTO system releases control of engine speed, but the PTO load relay remains engaged. The engine will return to base idle unless the accelerator pedal is pressed. The PTO load relay remains engaged. The PTO indicator light will blink slowly indicating that a PTO set speed is still stored in memory. Upon releasing the brake, the factory default programming is for the engine speed to remain at curb idle awaiting an input from +RES on the cruise control to restore engine rpm to the last PTO set speed. The system can also be programmed to return engine rpm to the PTO Standby Speed setting.
- Press on the cruise control. The engine returns to base idle, but the PTO load relay remains engaged. The PTO indicator light will blink slowly indicating

that a PTO set speed is still stored in memory. Pressing +RES on the cruise control will restore engine rpm to the last PTO set speed.

- Press the PTO in-cab switch. Load relay disengages and the engine returns to base idle. The PTO indicator light will turn off, indicating the PTO load relay is disengaged and the stored set speed has been cleared from memory.

Mobile Mode will also disengage if:

- PTO feedback input is lost. The engine speed is returned to the PTO Standby speed setting and the load is still engaged. This is configurable with the GM Service Tool.
- Vehicle Speed exceeds Max Vehicle Speed. Factory default setting = 94 km/h (58 mph). PTO relay will re-engage and advance to the last engine speed stored in memory when both the Vehicle Speed is reduced below 94 km/h (58 mph) and the engine speed ramps down below the maximum PTO engagement speed (1500 rpm factory default setting).
- Engine Speed exceeds Max Engine Speed for more than 15 seconds. Factory default setting = 2100 rpm.
- on the cruise control is pressed.
- The parking brake is applied.
- The shift lever is moved out of manual shift selection, M1, M2, or M3.

Resume memory speed is cleared for the above actions.

Although the PTO system attempts to limit accelerator and PTO switch inputs to comply with maximum speed and/or rpm parameters, some vehicle operating conditions such as downhill acceleration can cause the vehicle speed or engine rpm to exceed these limits. In those cases, the PTO system may disengage.

Operator Selectable In-Cab Mode (OSIM)

To disable OSIM Stationary PTO:

- Press and release the PTO in-cab switch.

To disable OSIM Mobile PTO:

- Press and release the PTO in-cab switch.

Prolonged or Extended PTO Operation

When operating the vehicle in stationary PTO mode, the Diesel Particulate Filter (DPF) will continue to filter the exhaust and accumulate soot. The engine control system, depending on the speed and load being applied by the PTO, may not be able to generate enough energy or adequate heat needed to clean or regenerate the DPF. Continued operation under conditions that do not allow effective regeneration or cleaning will eventually plug the DPF and result in reduced power. The ENGINE POWER IS REDUCED Driver Information Center (DIC) message and

malfunction indicator lamp will be displayed, and dealer service will be required to return the vehicle to normal, full power operation. To prevent this from occurring, frequently monitor the vehicle during PTO operation, paying particular attention to the CLEAN EXHAUST FILTER SEE OWNER MANUAL NOW DIC warning message. If the DIC message is displayed during PTO operation, see *Diesel Particulate Filter* ⇨ *215* for information on how to clean or regenerate the DPF.

PTO Operational Speed Control

Variable PTO operational speed control provides the following functions:

Cruise Control SET− (In-Cab) or Remote PTO Set 1 Switch

SET : Press and hold the accelerator to obtain the desired engine speed, then press and release SET− on the cruise control. The current engine speed will be maintained. This action can be repeated as desired to capture a higher rpm value. The PTO set speed cannot exceed 2900 rpm.

TAP DOWN : Press and release SET− on the cruise control to reduce the engine speed by increments of 100 rpm. The tap down engine speed increments can be adjusted by the GM Service Tool. The Service Tool can enable the option for adjustment of tap down engine speed increments through the Radio Customization menu.

COAST : Press and hold SET− on the cruise control to reduce the rpm at 150 rpm/sec until the desired engine speed is reached or until the initial PTO Standby Speed is reached.

In-Cab Cruise Control +RES or Remote PTO Set 2 Switch

RESUME : After a PTO set speed has been met, a Resume Speed message is retained after an application of the brake pedal. Engine speed will reduce to basic idle speed. The PTO indicator light will blink slowly indicating the previous PTO set speed has been retained in memory. Press and release +RES on the cruise control to resume the previous PTO set speed.

TAP UP : Press and release +RES on the cruise control to increase the engine speed by increments of 100 rpm (factory preset value). The tap up engine speed increments can be adjusted by the GM Service Tool. The Service Tool can enable the option for adjustment of tap up engine speed increments through the Radio Customization menu.

ACCEL : Press and hold +RES on the cruise control to increase the rpm by 150 rpm/sec until the desired engine speed is reached or until the maximum allowable PTO set speed is reached. Alternatively, the engine speed acceleration can be adjusted through the Radio Customization menu.

Factory Preset Parameters

The following table lists the factory preset parameters. These may be altered by the GM Service Tool to configure the various PTO features.

Programmable Parameters	Factory Setting	Minimum Value	Maximum Value
PTO Option Configuration	VEHICLE STATIONARY, PRESET SPEED	VEHICLE STATIONARY, PRESET SPEED VEHICLE STATIONARY, VARIABLE SPEED VEHICLE MOBILE, VARIABLE SPEED	
PTO Control	In-Cab PTO Mode	In-Cab PTO Mode, Remote PTO Mode, Operator In-Cab Selectable Mode (OSIM)	
Type of Set Switch Operation	MOMENTARY	MOMENTARY	LATCHING
PTO SET 1 Engine Speed After PTO On	DISABLED	DISABLED	ENABLED
PTO Load Feedback	DISABLED	DISABLED	ENABLED
PTO Relay	ENABLED	DISABLED	ENABLED
Keep PTO Relay Engaged during Braking or upon Pressing	ENABLED	DISABLED	ENABLED

Programmable Parameters	Factory Setting	Minimum Value	Maximum Value
Action after Brake Is Released	RETURN TO BASE IDLE rpm	RETURN TO BASE IDLE rpm	RETURN TO STANDBY rpm Max. vehicle speed may be limited to 64 km/h (40 mph) if this is programmed with the GM Service Tool.
Set Low Fuel Level for Engine Shutdown	15%	0%	25%
Engine Run Time with PTO Active Timer	ENABLED	DISABLED	ENABLED
Engine Run Time while PTO Is Active	420 min	10 min	3480 min
PTO Max. Engine Speed	2100 rpm	1100 rpm	2900 rpm
Min. Engine Speed for PTO Engagement	500 rpm	500 rpm	1000 rpm
Max. Engine Speed for PTO Engagement	1500 rpm	1000 rpm	1800 rpm
PTO Standby rpm	900 rpm	700 rpm	1500 rpm
PTO Set Speed 1	1200 rpm	1100 rpm	2900 rpm
PTO Set Speed 2	1900 rpm	1900 rpm	2900 rpm

Programmable Parameters	Factory Setting	Minimum Value	Maximum Value
Engine Speed Tap Step	100 rpm	4 rpm	500 rpm
Engine Speed Ramp Rate	150 rpm	4 rpm	150 rpm
Maximum Vehicle Speed	94 km/h (58 mph)	30 km/h (19 mph)	94 km/h (58 mph)
Minimum Remote Potentiometer Threshold	2%	0%	50%
Maximum Remote Potentiometer Threshold	95%	50%	100%
Remote Set Switch Transition to Low Voltage (<33% of Ignition Voltage)	SET SPEED 1	STANDBY SPEED, SET SPEED 1, or SET SPEED 2	
Remote Set Switch Transition to Open State (>33% of Ignition, and <67% of Ignition Voltage)	PTO STANDBY	STANDBY SPEED, SET SPEED 1, or SET SPEED 2	
Remote Set Switch Transition to High Voltage (>67% of Ignition Voltage)	SET SPEED 2	STANDBY SPEED, SET SPEED 1, or SET SPEED 2	
Horn Chirps during a Remote Start Event	ENABLED	DISABLED	ENABLED
Personalization Menu	ENABLED	DISABLED	ENABLED

Programmable Parameters	Factory Setting	Minimum Value	Maximum Value
Standby Speed Menu	DISABLED	DISABLED	ENABLED
Set 1 Speed Menu (In Stationary Preset)	DISABLED	DISABLED	ENABLED
Set 2 Speed Menu (In Stationary Preset)	DISABLED	DISABLED	ENABLED
Engine Run Shutdown Time Menu (In Stationary Preset)	DISABLED	DISABLED	ENABLED
Engine Speed Tap Step Menu (In Stationary Variable and Mobile)	DISABLED	DISABLED	ENABLED
Remote Set Switch Speed Control	DISABLED	DISABLED	ENABLED
Remote Throttle Speed Control	DISABLED	DISABLED	ENABLED
Remote Engine Start	DISABLED	DISABLED	ENABLED
Remote Engine Shutdown	DISABLED	DISABLED	ENABLED
Throttle Override	ENABLED	DISABLED	ENABLED
Throttle Override Timer	10 Minutes	10 Minutes	13 Minutes

Programmable Parameters	Factory Setting	Minimum Value	Maximum Value
Driver Door Status Usage	ENABLED	DISABLED	ENABLED
Remote PTO In Cab Control	DISABLED	DISABLED	ENABLED

If the PTO factory preset parameters do not match the settings described above, then they may have already been altered in order to satisfy the requirements of the installed PTO system and body equipment.

The following PTO settings are also offered via the vehicle customization screens, which can be enabled by your service technician. These include the following parameters:

- PTO Standby rpm
- PTO Set 1 Speed
- PTO Set 2 Speed
- Tap Step Speed
- PTO Engine Run Timer

Driver Information Center (DIC) Warning Messages

If the PTO indicator light does not remain on, it indicates that not all PTO enabling conditions have been met. One or more of the following DIC messages may display if the PTO will not engage and the appropriate action must be taken.

- PTO: SHIFT TO PARK (P) (Stationary mode only)
- PTO: SET PARK BRAKE (Stationary mode only)
- PTO: PRESS & RELEASE BRAKE (Mobile mode only)
- PTO: RELEASE BRAKE TO ENGAGE PTO
- PTO: REDUCE VEHICLE SPEED
- PTO: REDUCE ENGINE SPEED
- PTO: DISENGAGE CRUISE CONTROL
- PTO: ACCELERATION UPON BRAKE RELEASE
- PTO: SERVICE PTO
- PTO: SHIFT TO M1, M2 OR M3 (Mobile mode only)
- Action Required Cleaning Exhaust Filter Continue Driving (DPF Only)
- Action Required Cleaning Exhaust Filter Must Continue Driving (DPF Only)

- Exhaust Filter Cleaning Available Go to Options Menu (DPF Only)

In addition, the PTO indicator light will light when all conditions required to engage PTO have not been met. When enabling PTO, the PTO indicator light will turn on, then turn off after one second. Under normal operating conditions, the PTO indicator light will remain on throughout the PTO operating cycle.

Additional in-vehicle PTO module information can be accessed by the service technician to aid in troubleshooting. Also see the service manual for more information.

The GM service technician can access Service Tool information that will contain reasons why PTO may not engage and why PTO may unexpectedly disengage due to system conditions.

See www.gmupfitter.com for information on the installation of wiring and programming for PTO aftermarket equipment.

Diesel Particulate Filter Cleaning During PTO Operation

This feature is only available on Fleet and Commercial vehicles. To verify that the vehicle has this feature, see www.gmupfitter.com to contact the GM Upfitter Integration Group for assistance.

If equipped, this feature allows for manual cleaning/regeneration of the Diesel Particulate Filter (DPF) when it is unable to clean itself. It may be necessary to perform a manual regeneration if driving conditions — such as extended slow speed, stop-and-go traffic, extended idles, short drive cycles, or stationary PTO operation — prevent DPF self-cleaning.

Manual regeneration can only be used when the DPF has become at least 90% full. At 100% full, it will attempt to automatically self-clean if proper driving conditions are met. The DPF will clean itself if the vehicle can be driven above 50 km/h (30 mph) for about 30 minutes.

Manual regeneration can be used during a stationary PTO session. However it is strongly recommended that the exhaust filter be cleaned before continuous PTO. If manual regeneration is operating concurrently with PTO then the PTO system will retain control of the engine speed. Low PTO engine speeds will cause regeneration to take longer. To initiate a manual DPF regeneration, see “Manual Regeneration of Diesel Particulate Filter” under Diesel Particulate Filter.

Vehicle Care

General Information
General Information 286
California Proposition 65 Warning 286
California Perchlorate Materials Requirements 286
Accessories and Modifications 286

Vehicle Checks
Doing Your Own Service Work 287
Hood 287
Engine Compartment Overview 290
Engine Oil 291
Engine Oil Life System 294
Automatic Transmission Fluid 295
Engine Air Cleaner/Filter 295
Cooling System 297
Engine Overheating 301
Engine Fan 302
Power Steering Fluid 302
Washer Fluid 304
Brakes 304
Brake Fluid 307
Battery - North America 308
Four-Wheel Drive 309
Front Axle 310
Rear Axle 310
Noise Control System 311
Starter Switch Check 312
Wiper Blade Replacement 312
Glass Replacement 313

Headlamp Aiming
Headlamp Aiming 313

Bulb Replacement
Bulb Replacement 313
Halogen Bulbs 313
LED Lighting 314
Headlamps, Front Turn Signal, Sidemarker, and Parking Lamps 314
Fog Lamps 314
Taillamps 315
Center High-Mounted Stoplamp (CHMSL) and Cargo Lamp 315

Electrical System
Electrical System Overload . . . 316
Fuses and Circuit Breakers . . . 316
Engine Compartment Fuse Block 317
Instrument Panel Fuse Block (Right) 320
Instrument Panel Fuse Block (Left) 322

Wheels and Tires
Tires 325
Tire Pressure 326
Tire Inspection 327
Tire Rotation 328
When It Is Time for New Tires 329
Wheel Alignment and Tire Balance 331
Wheel Replacement 332
Tire Chains 335
If a Tire Goes Flat 335

Jump Starting
Jump Starting - North America 336

Towing the Vehicle
Towing the Vehicle 339

Appearance Care
Exterior Care 343
Interior Care 348

General Information

For service and parts needs, visit your dealer. You will receive genuine GM parts and GM-trained and supported service people.

Genuine GM parts have one of these marks:

ACDelco

GM GENUINE PARTS

GMC

ACCESSORIES

California Proposition 65 Warning

⚠ Warning

Most motor vehicles, including this one, as well as many of its service parts and fluids, contain and/or emit chemicals known to the State of California to cause cancer and birth defects or other reproductive harm. Engine exhaust, many parts and systems, many fluids, and some component wear by-products contain and/or emit these chemicals. For more information go to www.P65Warnings.ca.gov/passenger-vehicle.

See *Battery - North America* ⇨ *308* and *Jump Starting - North America* ⇨ *336* and the back cover.

California Perchlorate Materials Requirements

Certain types of automotive applications, such as airbag initiators, seat belt pretensioners, and lithium batteries contained in Remote Keyless Entry transmitters, may contain perchlorate materials. Special handling may be necessary. For additional information, see www.dtsc.ca.gov/hazardouswaste/perchlorate.

Accessories and Modifications

Adding non-dealer accessories or making modifications to the vehicle can affect vehicle performance and safety, including such things as airbags, braking, stability, ride and handling, emissions systems, aerodynamics, durability, and electronic systems like antilock brakes, traction control, and stability control. These accessories or modifications could even cause malfunction or damage not covered by the vehicle warranty.

Damage to suspension components caused by modifying vehicle height outside of factory settings will not be covered by the vehicle warranty.

Damage to vehicle components resulting from modifications or the installation or use of non-GM certified parts, including control module or software modifications, is not covered under the terms of the vehicle warranty and may affect remaining warranty coverage for affected parts.

GM Accessories are designed to complement and function with other systems on the vehicle. See your dealer to accessorize the vehicle using genuine GM Accessories installed by a dealer technician.

Also, see *Adding Equipment to the Airbag-Equipped Vehicle* ⇨ *67*.

Vehicle Checks

Doing Your Own Service Work

⚠ Warning

It can be dangerous to work on your vehicle if you do not have the proper knowledge, service manual, tools, or parts. Always follow owner's manual procedures and consult the service manual for your vehicle before doing any service work.

If doing some of your own service work, use the proper service manual. It tells you much more about how to service the vehicle than this manual can. To order the proper service manual, see *Publication Ordering Information* ⇨ *416*.

This vehicle has an airbag system. Before attempting to do your own service work, see *Servicing the Airbag-Equipped Vehicle* ⇨ *67*.

Keep a record with all parts receipts and list the mileage and the date of any service work performed.

Caution

Even small amounts of contamination can cause damage to vehicle systems. Do not allow contaminants to contact the fluids, reservoir caps, or dipsticks.

Hood

To open the hood:

1. Go to the driver side of the vehicle and pull up on the hood latch, then go to the passenger side and pull up on the other hood latch.

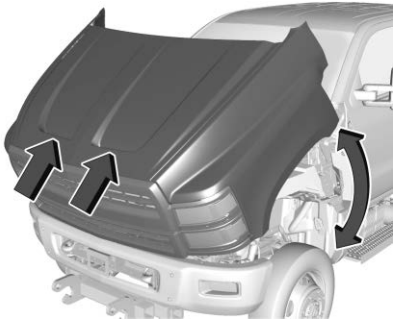

2. Carefully tilt the hood forward using the front of the hood, where indicated by arrows, until it comes to a vertical stop.

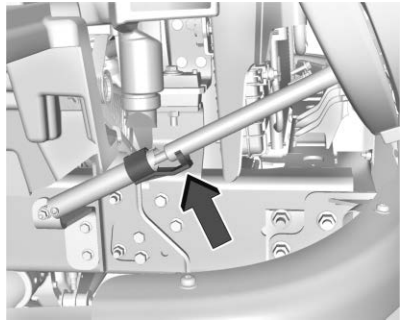

3. The hood actuator lock, located on the passenger side, will lock to secure the hood.

Before closing the hood, be sure all the filler caps are on properly.

To close the hood:

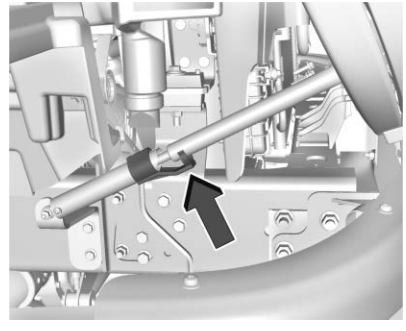

1. Lift up on the hood actuator strut lock, located on the passenger side, to unlock the actuator strut and allow the hood to be closed.

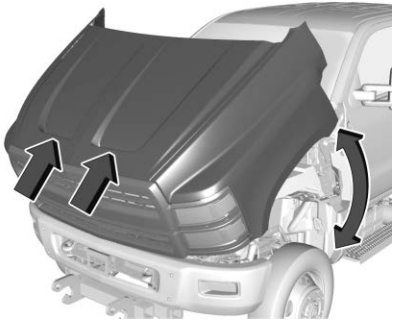

2. Carefully tilt the hood back using the front of the hood, where indicated by arrows, until it is lowered all the way.

3. Secure the hood by securing the hood latches on the passenger and driver side.

Engine Compartment Overview

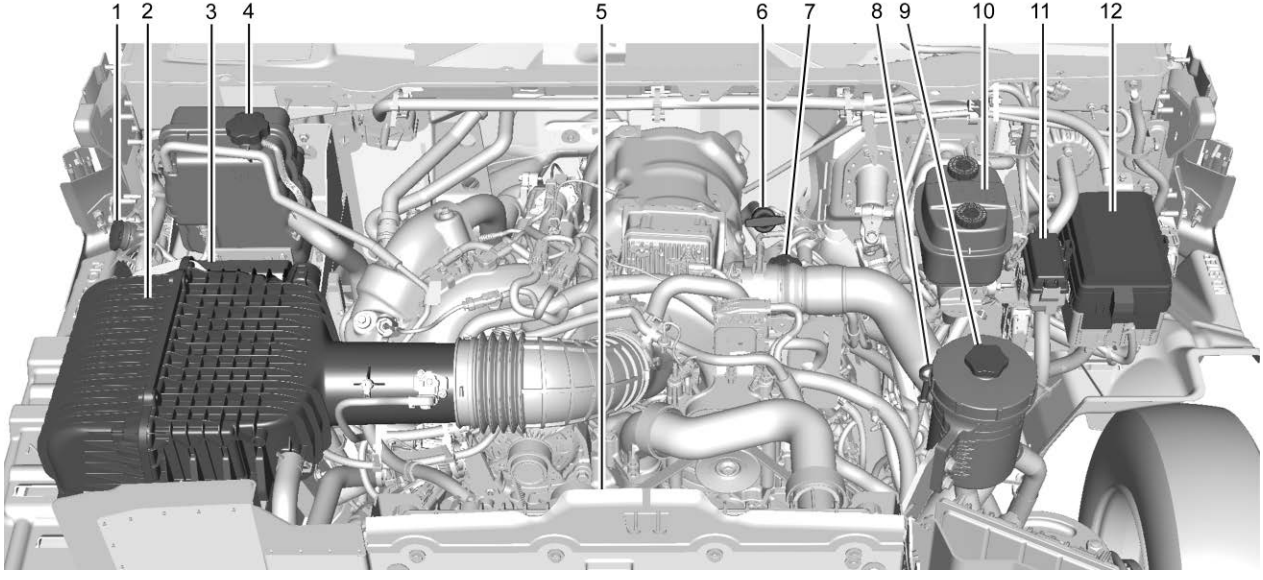

1. Windshield Washer Fluid Reservoir. See “Adding Washer Fluid” under *Washer Fluid* ⇨ *304*.
2. *Engine Air Cleaner/Filter* ⇨ *295*.
3. Battery Distribution Block.
4. Engine Coolant Surge Tank and Pressure Cap. See *Cooling System* ⇨ *297*.
5. Engine Cooling Fan (Out of View). See *Cooling System* ⇨ *297*.
6. Engine Oil Fill Cap. See “When to Add Engine Oil” under *Engine Oil* ⇨ *291*.
7. Automatic Transmission Dipstick. See *Automatic Transmission Fluid* ⇨ *295*.
8. Engine Oil Dipstick. See “Checking Engine Oil” under *Engine Oil* ⇨ *291*.
9. Power Steering Fluid Reservoir. See *Power Steering Fluid* ⇨ *302*.
10. Brake Fluid Reservoir. See *Brake Fluid* ⇨ *307*.
11. Auxiliary Fuse Block. See *Engine Compartment Fuse Block* ⇨ *317*.
12. Underhood Fuse Block. See *Engine Compartment Fuse Block* ⇨ *317*.

Engine Oil

To ensure proper engine performance and long life, careful attention must be paid to engine oil. Following these simple, but important steps will help protect your investment:

- Use engine oil approved to the proper specification and of the proper viscosity grade. See “Selecting the Right Engine Oil” in this section.
- Check the engine oil level regularly and maintain the proper oil level. See “Checking Engine Oil” and “When to Add Engine Oil” in this section.
- Change the engine oil at the appropriate time. See *Engine Oil Life System* ⇨ *294*.
- Always dispose of engine oil properly. See “What to Do with Used Oil” in this section.

Checking Engine Oil

Check the engine oil level regularly, every 650 km (400 mi), especially prior to a long trip. The engine oil dipstick handle is a loop. See *Engine Compartment Overview* ⇨ *290* for the location.

⚠ Warning

The engine oil dipstick handle may be hot; it could burn you. Use a towel or glove to touch the dipstick handle.

If a low oil Driver Information Center (DIC) message displays, check the oil level.

Follow these guidelines:

- To get an accurate reading, park the vehicle on level ground. Check the engine oil level after the engine has been off for at least two hours. Checking the

engine oil level on steep grades or too soon after engine shutoff can result in incorrect readings. Accuracy improves when checking a cold engine prior to starting. Remove the dipstick and check the level.

- If unable to wait two hours, the engine must be off for at least 15 minutes if the engine is warm, or at least 30 minutes if the engine is not warm. Pull out the dipstick, wipe it with a clean paper towel or cloth, then push it back in all the way. Remove it again, keeping the tip down, and check the level.

When to Add Engine Oil

If the oil is below the cross-hatched area at the tip of the dipstick and the engine has been off for at least 15 minutes, add 1 L (1 qt) of the recommended oil and then recheck the level. See “Selecting the Right Engine Oil” later in this section for an explanation of what kind of oil to use. For engine oil crankcase capacity, see *Capacities and Specifications* ⇨ *401*.

Caution

Do not add too much oil. Oil levels above or below the acceptable operating range shown on the dipstick are harmful to the engine. If the oil level is above the operating range (i.e., the engine has so much oil that the oil level gets above the cross-hatched area that shows the proper operating range), the engine could be damaged. Drain the excess oil or limit driving of the vehicle, and seek a service professional to remove the excess oil.

See *Engine Compartment Overview* ⇨ *290* for the location of the engine oil fill cap.

Be sure to add enough oil to put the level somewhere in the proper operating range. Push the dipstick all the way back in when through.

Selecting the Right Engine Oil

Specification

Oils designated as API CJ-4 or CK-4 are required for the vehicle. The CJ-4 or CK-4 designation can appear either alone or in combination with other American Petroleum Institute (API) designations, such as API CJ-4/SL. These letters show API levels of quality.

American Petroleum Institute (API) Symbol

This doughnut-shaped logo (symbol) is used on most oil containers to help you select the correct oil. It means that the oil has been certified by the American Petroleum Institute.

Look for this on the oil container, and use only those oils that display this logo.

Caution

Use only engine oils that have the designation CJ-4 or CK-4 for the diesel engine. Failure to use the recommended oil can damage the DPF and result in engine damage not covered by the vehicle warranty.

Viscosity Grade

Use SAE 15W-40 viscosity grade engine oil.

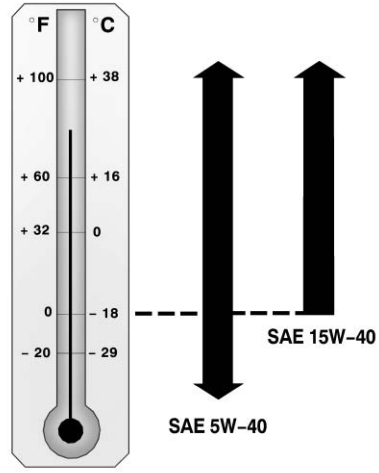

When it is very cold, below −18 °C (0 °F), use SAE 5W-40 to improve cold starting. These numbers on the oil container show its viscosity, or thickness.

When selecting an oil of the appropriate viscosity grade, always select an oil of the correct specification. See “Specification” earlier in this section.

Engine Oil Additives/Engine Oil Flushes

Do not add anything to the oil. The recommended oils with the API service symbol are all that is needed for good performance and engine protection.

Engine oil system flushes are not recommended and could cause engine damage not covered by the vehicle warranty.

What to Do with Used Oil

Used engine oil contains certain elements that can be unhealthy for your skin and could even cause cancer. Do not let used oil stay on your skin for very long. Clean your skin and nails with soap and water, or a good hand cleaner. Wash or properly dispose of clothing or rags containing used engine oil. See the manufacturer's warnings about the use and disposal of oil products.

Used oil can be a threat to the environment. If you change your own oil, be sure to drain all the oil from the filter before disposal. Never dispose of oil by putting it in the trash or pouring it on the ground, into sewers, or into streams or bodies of water. Recycle it by taking it to a place that collects used oil.

Engine Oil Life System

When to Change Engine Oil

This vehicle has a computer system that indicates when to change the engine oil and filter. This is based on a combination of factors which include engine revolutions, engine temperature, and miles driven. Based on driving conditions, the mileage at which an oil change is indicated can vary considerably. For the oil life system to work properly, the system must be reset every time the oil is changed.

On some vehicles, when the system has calculated that oil life has been diminished, a CHANGE ENGINE OIL SOON message comes on to indicate that an oil change is necessary. Change the oil as soon as possible within the next 1 000 km (600 mi). It is possible that, if driving under the best conditions, the oil life system might indicate that an oil change is not necessary for up to a year. The engine oil and filter must be changed at least once a year and, at this time, the system must be reset. For vehicles without the CHANGE ENGINE OIL SOON message, an oil change is needed when the REMAINING OIL LIFE percentage is near 0%. Your dealer has trained service people who will perform this work and reset the system. It is also important to check the oil regularly over the course of an oil drain interval and keep it at the proper level.

If the system is ever reset accidentally, the oil must be changed at 5 000 km (3,000 mi)

since the last oil change. Remember to reset the oil life system whenever the oil is changed.

How to Reset the Engine Oil Life System

Reset the system whenever the engine oil is changed so that the system can calculate the next engine oil change. Always reset the engine oil life to 100% after every oil change. It will not reset itself. To reset the engine oil life system:

1. Display the REMAINING OIL LIFE on the DIC. If the vehicle does not have DIC buttons, the vehicle must be in P (Park) to access this display.
   See *Driver Information Center (DIC) (Base Level)* ⇨ *117* or *Driver Information Center (DIC) (Uplevel)* ⇨ *119*.
2. Press and hold ✓, or the trip odometer reset stem if the vehicle does not have DIC buttons, for several seconds. The oil life will change to 100%.

The oil life system can also be reset as follows:

1. Display the REMAINING OIL LIFE on the DIC.
   See *Driver Information Center (DIC) (Base Level)* ⇨ *117* or *Driver Information Center (DIC) (Uplevel)* ⇨ *119*.
2. Fully press the accelerator pedal slowly three times within five seconds.
3. Display the REMAINING OIL LIFE on the DIC. If the display shows 100%, the system is reset.

If the vehicle has a CHANGE ENGINE OIL SOON message and it comes back on when the vehicle is started and/or the REMAINING OIL LIFE is near 0%, the engine oil life system has not been reset. Repeat the procedure.

Automatic Transmission Fluid

When to Check and Change

Refer to the Allison Automatic Transmission Manual.

Engine Air Cleaner/Filter

The air cleaner/filter assembly is on the front corner of the engine compartment on the passenger side of the vehicle. See *Engine Compartment Overview* ⇨ *290*.

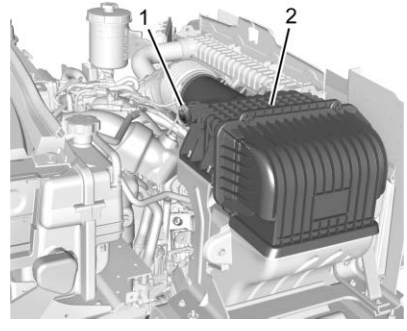

1. Air restriction gauge
2. Air cleaner/filter

Air Restriction Gauge

The air restriction gauge indicates how much engine air cleaner filter capacity has been used and how much filter capacity remains.
It measures maximum restriction of the filter element when the engine is operated at full load and locks at that point. This feature allows you to read the maximum restriction with the engine shut down.

The gauge is mounted just behind the engine air cleaner and is visible on the passenger side of the engine compartment.

Do not reset the gauge until it has been determined that air cleaner service is required.

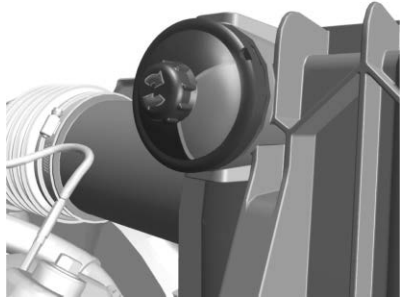

If the gauge is in the red zone, replace the air cleaner/filter and then reset the gauge by twisting the black knob until the gauge is in the complete green zone.

When to Inspect the Engine Air Cleaner/Filter

For intervals on changing and inspecting the engine air filter, see *Maintenance Schedule* ⇨ *354*.

How to Inspect the Engine Air Cleaner/Filter

Do not start the engine or have the engine running with the engine air filter housing open. Before removing the engine air filter, make sure that the engine air filter housing and nearby components are free of dirt and debris. Remove the engine air filter. Lightly tap and shake the engine air filter (away from the vehicle) to release dust and dirt. Inspect the engine air filter for damage, and replace if damaged. Do not clean the engine air filter or components with water or compressed air. When changing the air filter, remove the dust valve from the front intake air duct and clean out any debris if necessary.

Caution

Water sprayed into or on the air intake box in the engine compartment may damage the air filter or electrical components. Do not spray water into or on the air intake box.

To inspect and replace the filter:

1. Tilt the hood open. See *Hood* ⇨ *287*.

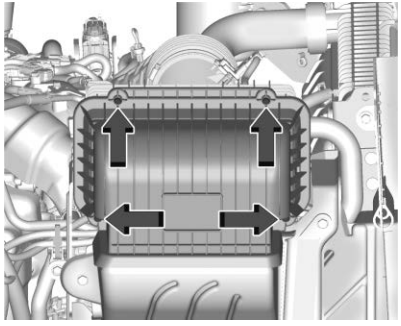

2. Remove the four screws from the housing cover.
3. Raise the housing cover. Take care not to move the air cleaner/filter housing base, to avoid any air leaks.
4. Remove the air cleaner/filter from the housing base. Take care to dislodge as little dirt as possible.
5. Clean the air cleaner/filter sealing surface and the housing base.
6. Install the engine air cleaner/filter.
7. Lower the air cleaner/filter housing cover and secure with the four screws.
8. Tilt the hood to close. See *Hood* ⇨ *287*.

See *Maintenance Schedule* ⇨ *354* to determine when to replace the engine air cleaner/filter.

⚠ Warning

Operating the engine with the air cleaner/filter off can cause you or others to be burned. Use caution when working on the engine. Do not start the engine or drive the vehicle with the air cleaner/filter off, as flames may be present if the engine backfires.

Caution

If the air cleaner/filter is off, dirt can easily get into the engine, which could damage it. Always have the air cleaner/filter in place when driving.

Cooling System

The cooling system allows the engine to maintain the correct working temperature.

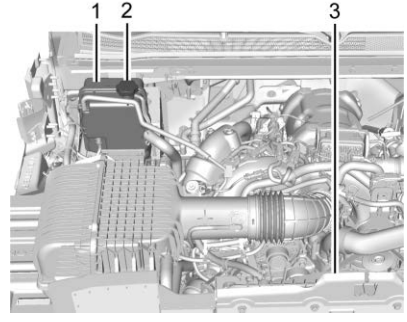

1. Coolant Surge Tank

2. Coolant Surge Tank Pressure Cap
3. Engine Cooling Fan (Out of View)

⚠ Warning

Do not touch heater or radiator hoses, or other engine parts. They can be very hot and can burn you. Do not run the engine if there is a leak; all coolant could leak out. That could cause an engine fire and can burn you. Fix any leak before driving the vehicle.

Engine Coolant

⚠ Warning

Plain water, or other liquids such as alcohol, can boil before the proper coolant mixture will. With plain water or the wrong mixture, the engine could get too hot but there would not be an overheat

(Continued)

Warning (Continued)

warning. The engine could catch fire and you or others could be burned.

The cooling system in the vehicle is filled with DEX-COOL engine coolant mixture.
See *Recommended Fluids and Lubricants* ⇨ *391* and *Maintenance Schedule* ⇨ *354*.

The following explains the cooling system and how to add coolant when it is low. If there is a problem with engine overheating, see *Engine Overheating* ⇨ *301*.

A 50/50 mixture of clean, drinkable water and DEX-COOL coolant will:

- Give freezing protection down to −37 °C (−34 °F).
- Give boiling protection up to 129 °C (265 °F).
- Protect against rust and corrosion.
- Help keep the proper engine temperature.
- Let the warning lights and gauges work as they should.

What to Use

Use a 50/50 mixture of clean, drinkable water and DEX-COOL coolant which will not damage aluminum parts. If using this mixture, nothing else needs to be added.

If coolant has to be added more than four times a year, have your dealer check the vehicle cooling system.

Caution

Do not use anything other than a mix of DEX-COOL coolant that meets GM Standard GMW3420 and clean, drinkable water. Anything else can cause damage to the engine cooling system and the vehicle, which would not be covered by the vehicle warranty.

Never dispose of engine coolant by putting it in the trash, or by pouring it on the ground or into sewers, streams, or bodies of water. Have the coolant changed by an authorized service center, familiar with legal requirements regarding used coolant disposal. This will help protect the environment and your health.

Checking Coolant

The coolant surge tank is in the engine compartment on the passenger side of the vehicle. See *Engine Compartment Overview* ⇨ *290* for location.

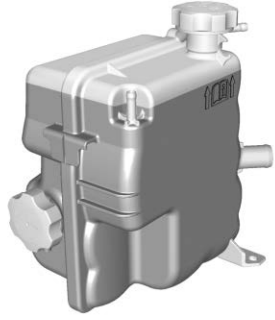

The coolant surge tank is divided into two sides. The upper portion coolant level should be at or above, the bottom of the indicator arrows. The coolant level must be checked when the engine is cold and the vehicle must be on a level surface.

The lower portion will be mostly empty, depending on the operating temperature.

⚠ Warning

Turning the surge tank pressure cap when the engine and radiator are hot can allow steam and scalding liquids to blow out and burn you badly. Never turn the surge tank pressure cap — even a little — when the engine and radiator are hot.

Adding Coolant

Caution

If coolant is changed or added, always add enough to fill the system completely or engine damage may occur.

If more coolant is needed, add the proper DEX-COOL coolant mixture at the surge tank, but be careful not to spill it.

⚠ Warning

Spilling coolant on hot engine parts can burn you. Coolant contains ethylene glycol and it will burn if the engine parts are hot enough.

⚠ Warning

Steam and scalding liquids from a hot cooling system are under pressure. Turning the pressure cap, even a little, can cause them to come out at high speed and you could be burned. Never turn the cap when the cooling system, including the pressure cap, is hot. Wait for the cooling system and pressure cap to cool.

⚠ Caution

Failure to follow the specific coolant fill procedure could cause the engine to overheat and could cause system damage. If coolant is not visible in the surge tank, contact your dealer.

If no coolant is visible in the surge tank, add coolant as follows:

1. Remove the coolant surge tank pressure cap when the cooling system, including the coolant surge tank pressure cap and upper radiator hose, is no longer hot.

   Turn the pressure cap slowly clockwise about one-half turn. If a hiss is heard, wait for that to stop. A hiss means there is still some pressure left.

2. Keep turning the pressure cap slowly, and remove it.

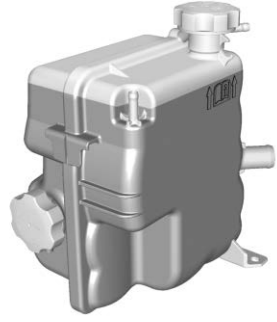

3. Slowly fill the coolant surge tank. Do not let the coolant level go above the indicated mark in the tank until after the engine comes to the operating temperature in Step 4.
4. With the coolant surge tank pressure cap off, start the engine and let it run until the

engine coolant temperature gauge indicates approximately 90 °C (195 °F).

By this time, the coolant level inside the coolant surge tank may be lower. If the level is lower, slowly add more of the proper mixture to the coolant surge tank until it reaches the indicated mark.

5. Replace the pressure cap. Be sure the pressure cap is locked.
6. Verify coolant level after the engine is shut off and the coolant is cold. If necessary, repeat coolant fill procedure Steps 1–6.

If the coolant level is still low after having followed these steps twice, have the coolant system checked by a certified technician at the dealer for a possible leak.

Caution

If the pressure cap is not tightly installed, coolant loss and engine damage may occur. Be sure the cap is properly and tightly secured.

Engine Overheating

There is an engine coolant temperature gauge on the instrument cluster.

If Steam Is Coming from the Engine Compartment

⚠ Warning

Steam and scalding liquids from a hot cooling system are under pressure. Turning the pressure cap, even a little, can cause them to come out at high speed and you could be burned. Never turn the cap when the cooling system,

(Continued)

Warning (Continued)

including the pressure cap, is hot. Wait for the cooling system and pressure cap to cool.

Caution

Do not run the engine if there is a leak in the engine cooling system. This can cause a loss of all coolant and can damage the system and vehicle. Have any leaks fixed right away.

If No Steam Is Coming from the Engine Compartment

A Driver Information Center (DIC) message, along with a low coolant condition, can indicate a serious problem.

If there is an engine overheat warning and the vehicle does not have a low coolant condition, and no steam is heard or seen, the

problem may not be too serious. Sometimes the engine can get a little too hot when the vehicle:

- Climbs a long hill on a hot day.
- Stops after high-speed driving.
- Idles for long periods in traffic.
- Tows a trailer. See “Driving on Grades” under *Driving Characteristics and Towing Tips* ⇨ *247*.

If the DIC message comes on with no sign of steam, try this for a minute or so:

1. In heavy traffic, let the engine idle in N (Neutral) while stopped. If it is safe to do so, pull off the road, shift to P (Park) or N (Neutral), and let the engine idle.
2. Turn on the heater to full hot at the highest fan speed and open the window as necessary.

If the vehicle no longer has the overheat warning, the vehicle can be driven. Just to be safe, drive slower for about 10 minutes. If the warning does not come back on, drive normally and have the cooling system checked for proper fill and function.

If the warning continues, pull over, stop, and park the vehicle right away.

If there is still no sign of steam and the vehicle is equipped with an engine driven cooling fan, push down the accelerator until the engine speed is about twice as fast as normal idle speed for at least five minutes while the vehicle is parked. If the warning is still there, turn off the engine and get everyone out of the vehicle until it cools down.

The decision may be made not to tilt the hood, but to get service help right away.

Engine Fan

The vehicle has a clutched engine cooling fan. When the clutch is engaged, the fan spins faster to provide more air to cool the engine. In most everyday driving conditions, the fan is spinning slower and the clutch is not fully engaged. This improves fuel economy and reduces fan noise. Under heavy vehicle loading, trailer towing, and/or high outside temperatures, the fan speed increases as the clutch more fully engages, so an increase in fan noise may be heard. This is normal and should not be mistaken as the transmission slipping or making extra shifts. It is merely the cooling system functioning properly. The fan will slow down when additional cooling is not required and the clutch disengages.

This fan noise may also be heard when starting the engine. It will go away as the fan clutch partially disengages.

Power Steering Fluid

See *Engine Compartment Overview* ⇨ *290* for reservoir location.

When to Check Power Steering Fluid

It is not necessary to regularly check power steering fluid unless there is a leak suspected in the system or an unusual noise is

heard. A fluid loss in this system could indicate a problem. Have the system inspected and repaired.

How to Check Power Steering Fluid

The fluid level should be between the MIN HOT and MAX HOT levels on the reservoir if the fluid is hot when checked. If the fluid is cold when checked, the fluid level should be between the MIN COLD and MAX COLD levels on the reservoir.

To check the power steering fluid:

1. Tilt the hood open. See *Hood* ⇨ *287*.

2. Check to see if the fluid level is at or above the MIN HOT level and below the MAX HOT level if the fluid is hot, or if the fluid level is at or above the MIN COLD level and below the MAX COLD line if the fluid is cold.

3. If the fluid is low, wipe the cap and the top of the reservoir clean.
4. Turn the cap counterclockwise and remove.
5. Fill the reservoir to the indicated MAX COLD or MAX HOT level.
6. Replace the cap and verify it is secure.
7. Tilt the hood closed. See *Hood* ⇨ *287*.

What to Use

To determine what kind of fluid to use, see *Recommended Fluids and Lubricants* ⇨ *391*. Always use the proper fluid.

Caution
Use of the incorrect fluid may damage the vehicle and the damages may not be covered by the vehicle warranty. Always use (Continued)

Caution (Continued)

the correct fluid listed in *Recommended Fluids and Lubricants* ⇨ *391*.

Washer Fluid

What to Use

When windshield washer fluid needs to be added, be sure to read the manufacturer's instructions before use. Use a fluid that has sufficient protection against freezing in an area where the temperature may fall below freezing.

Adding Washer Fluid

The vehicle has a low washer fluid message on the DIC that comes on when the washer fluid is low. The message is displayed for 15 seconds at the start of each ignition cycle. When the WASHER FLUID LOW ADD FLUID message displays, washer fluid will need to be added to the windshield washer fluid reservoir.

Open the cap with the washer symbol on it. Add washer fluid until the tank is full. See *Engine Compartment Overview* ⇨ *290* for reservoir location.

Caution

- Do not use washer fluid that contains any type of water repellent coating. This can cause the wiper blades to chatter or skip.
- Do not use engine coolant (antifreeze) in the windshield washer. It can damage the windshield washer system and paint.
- Do not mix water with ready-to-use washer fluid. Water can cause the

(Continued)

Caution (Continued)

solution to freeze and damage the washer fluid tank and other parts of the washer system.

- When using concentrated washer fluid, follow the manufacturer instructions for adding water.
- Fill the washer fluid tank only three-quarters full when it is very cold. This allows for fluid expansion if freezing occurs, which could damage the tank if it is completely full.

Brakes

⚠ Warning

To prevent property damage, personal injury, and/or death, always check and maintain brakes in proper condition and

(Continued)

Warning (Continued)

adjustment. Out-of-adjustment brakes could cause reduced braking ability.

Downhill Operation

⚠ Warning

To prevent property damage, personal injury, and/or death, do not attempt to gear down if the engine is at or near maximum speed (rpm). Under these conditions, it will be impossible to shift into a lower gear and could result in possible vehicle runaway.

Always descend hills with extreme care, relying mainly on the engine braking effect to control vehicle speed. Heed warning signs posted for any grade. Stop and check brakes for condition and adjustment at available pull off areas before starting a descent.

Observe the following precautions:

- Never coast downhill. Service brakes alone should not be used to control speed on major downgrades. Brakes will fade from overuse.
- Use the service brakes in addition to other ways of slowing down the vehicle. When descending long grades requiring use of the brakes, short applications (three to five seconds in duration) should be made rather than long, continuous applications. This minimizes temperature rise and brake fade.

Hydraulic Brakes

⚠ Warning

The brake system might not be working properly if the brake system warning light is on. Driving with the brake system warning light on can lead to a

(Continued)

Warning (Continued)

crash. If the light is still on after the vehicle has been pulled off the road and carefully stopped, have the vehicle towed for service.

The hydraulic brake system incorporates standard braking, Antilock Braking (ABS), and Automatic Traction Control (ATC) into one fully integrated hydraulic brake system. With the hydraulic brake system, braking energy is stored, similar to an air brake system, resulting in faster response times and shorter stopping distances. This is accomplished using motor/pump assemblies that pressurize the system by pumping brake fluid into accumulators. This is similar to the air compressor of an air brake system pressurizing the air tanks.

The system includes a master cylinder that provides the normal pedal “feel” and transfers the pedal

force, via brake fluid, to the main components of the hydraulic brake system.

The motor/pumps will run momentarily with the ignition on or off to maintain accumulator pressure. Therefore, whenever the brake pedal is pressed when the ignition is off, the motor/pumps may be heard.

Split System Feature

⚠ Warning

To prevent property damage, personal injury, and/or death, if part of the brake system fails, reduce speed and employ safe driving practices as stopping distance may increase under the failed condition since only one section of the brake system is operating. Have the brake system repaired immediately. Loss of braking capability could cause a crash.

The system is divided into two separate but identical channels: the primary channel (controls front axle) and the secondary channel (controls rear axle). The master cylinder provides brake lines that are routed to the front and rear brake channels.

With the split brake system, the vehicle should have reasonable brake control should one of the two channels fail. If one of the motor/pump related systems fails, you may not detect any difference in the feel of the pedal, but with a defect in the master cylinder circuit, you may experience a longer pedal stroke to attain desired stopping. With any system failure, one of the instrument cluster warning indicators will turn on.

Hydraulic Brake Booster System

⚠ Warning

To prevent property damage, personal injury, and/or death, if part of the brake system fails, reduce speed and employ safe driving practices as stopping distance may increase under the failed condition since only one section of the brake system is operating. Have the brake system repaired immediately. Loss of braking capability could cause a crash.

The system receives fluid pressure from the power steering pump to provide power assist during braking.

The hydraulic booster has a backup pump which will provide hydraulic boost at a reduced rate if the normal source of fluid is interrupted. The signal for operation of the backup pump comes from the flow switch. If normal flow is interrupted, the flow

switch will close and activate the relay, which will turn on the backup pump.

Under normal operating conditions, noise of the fluid flowing through the booster may be heard whenever the brake is applied. This is normal and should be no reason for concern.

If braking performance or pedal response becomes very poor, even when the pedal is strongly applied, this may indicate the presence of air in the hydraulic system or fluid leakage. Safely stop the vehicle as soon as possible and have the vehicle serviced right away.

Brake Fluid

The brake master cylinder reservoir is filled with GM approved DOT 3 brake fluid as indicated on the reservoir cap. See *Engine Compartment Overview* ⇨ *290* for the location of the reservoir.

Checking Brake Fluid

With the vehicle in P (Park) on a level surface, the brake fluid level should be between the minimum and maximum marks on the brake fluid reservoir.

There are only two reasons why the brake fluid level in the reservoir may go down:

- Normal brake lining wear. When new linings are installed, the fluid level goes back up.
- A fluid leak in the brake hydraulic system. Have the brake hydraulic system fixed. With a leak, the brakes will not work well.

Always clean the brake fluid reservoir cap and the area around the cap before removing it.

Do not top off the brake fluid. Adding fluid does not correct a leak. If fluid is added when the linings are worn, there will be too much fluid when new brake linings are installed. Add or remove fluid, as necessary, only when work is done on the brake hydraulic system.

⚠ Warning

If too much brake fluid is added, it can spill on the engine and burn, if the engine is hot enough. You or others could be burned, and the vehicle could be damaged. Add brake fluid only when work is done on the brake hydraulic system.

When the brake fluid falls to a low level, the brake warning light comes on. See *Brake System Warning Light* ⇨ *113*.

Brake fluid absorbs water over time which degrades the effectiveness of the brake fluid. Replace brake fluid at the specified intervals to prevent increased stopping distance. See *Maintenance Schedule* ⇨ *354*.

What to Add

Use only GM approved DOT 3 brake fluid from a clean, sealed container. See *Recommended Fluids and Lubricants* ⇨ *391*.

⚠ Warning

The wrong or contaminated brake fluid could result in damage to the brake system. This could result in the loss of braking leading to a possible injury. Always use the proper GM approved brake fluid.

Caution

If brake fluid is spilled on the vehicle's painted surfaces, the paint finish can be damaged. Immediately wash off any painted surface.

Battery - North America

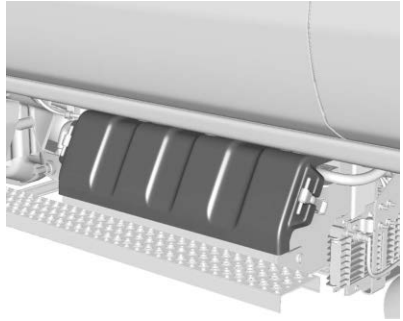

The batteries are located on the outboard side of the left frame rail, under the cab. The batteries are in a carrier with the cover retained by hold down straps.

The original equipment batteries are maintenance free. Do not remove the caps and do not add fluid.

Refer to the replacement number shown on the original battery label when new batteries are needed.

⚠ Warning

WARNING: Battery posts, terminals, and related accessories contain lead and lead compounds, chemicals known to the State of California to cause cancer and birth defects or other reproductive harm. Batteries also contain other chemicals known to the State of California to cause cancer. **WASH HANDS AFTER HANDLING.** For more information go to www.P65Warnings.ca.gov/passenger-vehicle.

See *California Proposition 65 Warning* ⇨ *286* and the back cover.

Vehicle Storage

⚠ Warning

Batteries have acid that can burn you and gas that can explode. You can be badly hurt if you are

(Continued)

Warning (Continued)

not careful. See *Jump Starting - North America* ⇨ *336* for tips on working around a battery without getting hurt.

Infrequent Usage: Remove the black, negative (−) cable from the battery to keep the battery from running down.

Extended Storage: Remove the black, negative (−) cable from the battery or use a battery trickle charger.

Four-Wheel Drive

Transfer Case

When to Check Lubricant

Refer to *Maintenance Schedule* ⇨ *354* to determine when to check the lubricant.

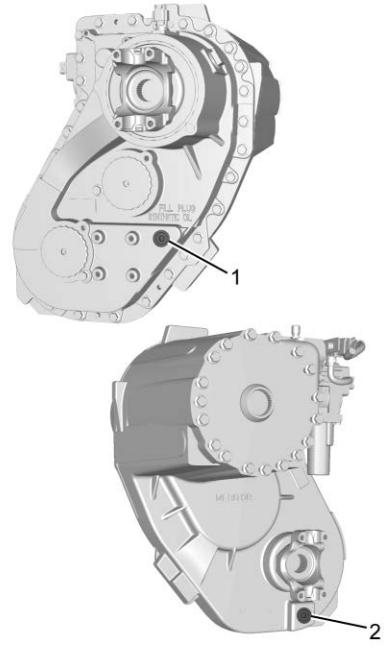

1. Fill Plug
2. Drain Plug

To get an accurate reading, the vehicle should be on a level surface.

If the level is below the bottom of the fill plug (1) hole, located on the transfer case, some lubricant will need to be added. Add enough lubricant to raise the level to the bottom of the fill plug (1) hole. Use care not to overtighten the plug.

Do not overfill the transfer case as this may cause seepage around bearing caps.

When to Change Lubricant

See *Maintenance Schedule* ⇨ *354* to determine how often to change the lubricant.

What to Use

See *Recommended Fluids and Lubricants* ⇨ *391* to determine what kind of lubricant to use.

Front Axle

When to Check and Change Lubricant

It is not necessary to regularly check front axle fluid unless a leak is suspected, or an unusual noise is heard. A fluid loss could indicate a problem. Have it inspected and repaired.

How to Check Lubricant

To get an accurate reading, the vehicle should be on a level surface.

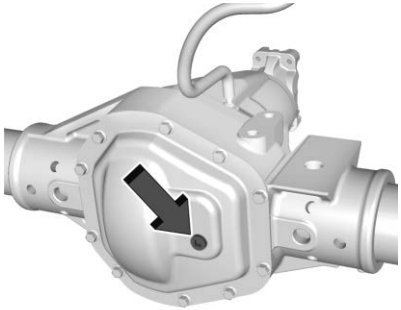

The fluid level should be even with the bottom of the fill plug hole. Add only enough fluid to reach the proper level.

What to Use

See *Recommended Fluids and Lubricants* ⇨ *391* to determine what kind of lubricant to use.

Rear Axle

When to Check Lubricant

It is not necessary to regularly check rear axle fluid unless a leak is suspected or an unusual noise is heard. A fluid loss could indicate a problem. Have it inspected and repaired.

All axle assemblies are filled by volume of fluid during production. They are not filled to reach a certain level. When checking the fluid level on any axle, variations in the readings can be caused by factory fill differences between the minimum and the maximum fluid volume. Also, if a vehicle has just been driven before checking the fluid level, it may appear lower than normal because fluid has traveled out along the axle tubes and has not drained back to the sump area. Therefore, a reading taken five minutes after the vehicle has been driven will appear to have a lower fluid level than a vehicle that has been stationary for an hour or two. The rear axle assembly must be supported on a flat, level surface to get a true reading.

How to Check Lubricant

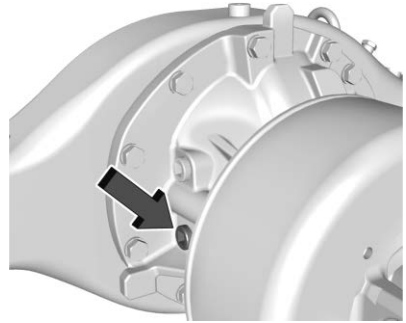

To get an accurate reading, the vehicle should be on a level surface.

The fluid level should be even with the bottom of the fill plug hole, located on the rear axle. Add only enough fluid to reach the proper level.

What to Use

See *Recommended Fluids and Lubricants* ⇨ *391* to determine what kind of lubricant to use.

Noise Control System

Noise Emissions Warranty

General Motors warrants to the first person who purchases this vehicle for purposes other than resale and to each subsequent purchaser that this vehicle as manufactured by General Motors, was designed, built and equipped to conform at the time it left General Motors's control with all applicable U.S. EPA Noise Control Regulations. This warranty covers this vehicle as designed, built and equipped by General Motors, and is not limited to any particular part, component or system of the vehicle manufactured by General Motors. Defects in design, assembly or in any part, component or system of the vehicle as manufactured by General Motors, which, at the time it left General Motors's control, caused noise emissions to exceed Federal standards, are covered by this warranty for the life of the vehicle.

The following information relates to compliance with federal noise emission standards for vehicles with a Gross Vehicle Weight Rating (GVWR) of more than 4 536 kg (10,000 lb). The Maintenance Schedule provides information on maintaining the noise control system to minimize degradation of the noise emission control system during the life of the vehicle. The noise control system warranty is given in the warranty manual.

These standards apply only to vehicles sold in the United States.

TAMPERING WITH NOISE CONTROL SYSTEM PROHIBITED

Federal law prohibits the following acts or the causing thereof:

1. The removal or rendering inoperative by any person, other than for purposes of maintenance, repair, or replacement, of any device or element of design incorporated into any new vehicle for the purpose of noise control prior to its sale or delivery to the ultimate purchaser or while it is in use; or
2. The use of the vehicle after such device or element of design has been removed or rendered inoperative by any person.

Among those acts presumed to constitute tampering are the acts listed below.

Insulation:

Removal of the noise shields or any underhood insulation.

Engine:

Removal or rendering the engine speed governor, if equipped, inoperative so as to allow engine speed to exceed manufacturer specifications.

Fan and Drive:

- Removal of the fan clutch, if equipped, or rendering the clutch inoperative.
- Removal of the fan shroud, if equipped.

Air Intake:

- Removal of the air cleaner silencer.
- Modification of the air cleaner.

Exhaust:

- Removal of the muffler and/or resonator.
- Removal of the exhaust pipes and exhaust pipe clamps.

Starter Switch Check

Neutral Safety Switch

Check the operation of the transmission neutral safety switch. Try to start the vehicle in all shift selector positions. The starter should only operate when the shift selector is in Neutral or Park.

Wiper Blade Replacement

Windshield wiper blades should be replaced periodically. See *Maintenance Schedule* ⇨ *354*.

Replacement blades come in different types and are removed in different ways. For proper type and length, see *Maintenance Replacement Parts* ⇨ *398*.

Caution

Allowing the wiper arm to touch the windshield when no wiper blade is installed could damage the windshield. Any damage that occurs would not be covered by

(Continued)

Caution (Continued)

the vehicle warranty. Do not allow the wiper arm to touch the windshield.

Front Wiper Blade Replacement

To replace the front wiper blades:

1. Pull the windshield wiper assembly away from the windshield.

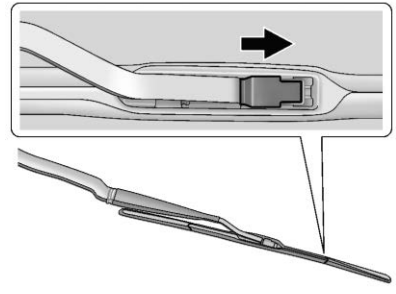

2. Lift up on the latch in the middle of the wiper blade where the wiper arm attaches.
3. With the latch open, pull the wiper blade down toward the windshield far enough to release it from the J-hooked end of the wiper arm.
4. Remove the wiper blade.
5. Reverse Steps 1–3 for wiper blade replacement.

Caution

Damage may occur if the wiper blades are not in contact with the windshield before turning on the wiper system.

Glass Replacement

If the windshield or front side glass must be replaced, see your dealer to determine the correct replacement glass.

Headlamp Aiming

Headlamp aim has been preset and should need no further adjustment.

If the vehicle is damaged in a crash, the headlamp aim may be affected. If adjustment to the headlamps is necessary, see your dealer.

Bulb Replacement

For the proper type of replacement bulbs, or any bulb changing procedure not listed in this section, contact your dealer.

Caution

Do not replace incandescent bulbs with aftermarket LED replacement bulbs. This can cause damage to the vehicle electrical system.

Halogen Bulbs

⚠ Warning

Halogen bulbs have pressurized gas inside and can burst if you drop or scratch the bulb. You or others could be injured. Be sure to read and follow the instructions on the bulb package.

LED Lighting

This vehicle has several LED lamps. For replacement of any LED lighting assembly, contact your dealer.

Headlamps, Front Turn Signal, Sidemarker, and Parking Lamps

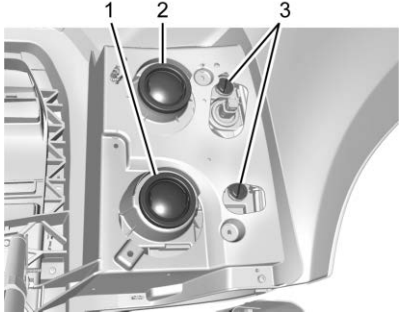

1. High-Beam Headlamp
2. Low-Beam Headlamp
3. Turn Signal/Sidemarker/ Parking Lamp

Headlamp

1. Open the hood.
2. Remove the headlamp bulb assembly cover.
3. Turn the bulb socket counterclockwise to remove it from the headlamp assembly and pull it straight out.
4. Unplug the electrical connector from the old bulb by releasing the clip on the bulb socket.

Turn Signal/Sidemarker/ Parking Lamp

1. Open the hood.
2. Turn the bulb socket counterclockwise to remove it from the headlamp assembly and pull it straight out.
3. Remove the bulb by pulling it straight out of the bulb socket.

Fog Lamps

To replace the front fog lamp bulb:

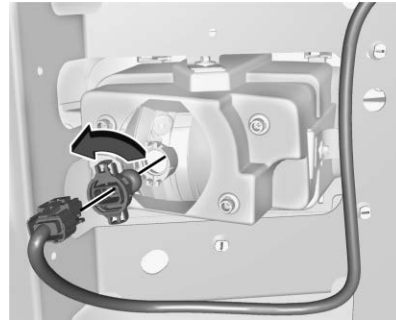

1. Locate the fog lamp in the front bumper.
2. Disconnect the electrical connector from the fog lamp bulb by pressing the connector release and pulling the connector straight out of the fog lamp bulb.
3. Remove the fog lamp bulb from the housing by turning counterclockwise and pulling it straight out of the assembly.
4. Replace the bulb and reverse Steps 1–3 to reinstall.

Taillamps

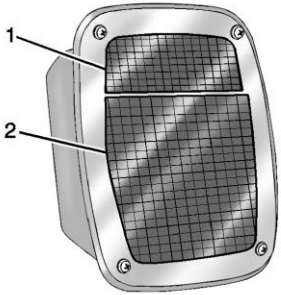

1. Back-Up Lamp
2. Stoplamp/Taillamp/Turn Signal Lamp

To replace one of these bulbs:

1. Remove the four screws.
2. Lift the lens off the lamp assembly.
3. Turn the old bulb counterclockwise and pull it straight out from the socket.

Center High-Mounted Stoplamp (CHMSL) and Cargo Lamp

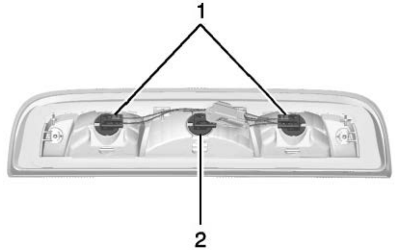

1. Cargo Lamp Bulbs
2. Center High-Mounted Stoplamp (CHMSL) Bulb

To replace one of these bulbs:

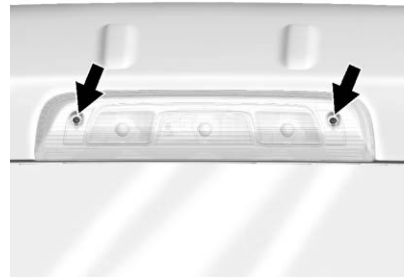

1. Remove the two screws and lift off the lamp assembly.
2. Turn the bulb socket counterclockwise and pull it straight out.
3. Pull the bulb straight out from the socket.

Electrical System

Electrical System Overload

The vehicle has fuses to protect against an electrical system overload. Fuses also protect power devices in the vehicle.

Replace a bad fuse with a new one of the identical size and rating.

If there is a problem on the road and a fuse needs to be replaced, there are some spare fuses and a fuse puller in the left instrument panel fuse block. The same amperage fuse can also be borrowed. Choose some feature of the vehicle that is not needed to use and replace it as soon as possible.

Headlamp Wiring

An electrical overload may cause the lamps to go on and off, or in some cases to remain off. Have the headlamp wiring checked right away if the lamps go on and off or remain off.

Windshield Wipers

If the wiper motor overheats due to heavy snow or ice, the windshield wipers will stop until the motor cools and will then restart.

Although the circuit is protected from electrical overload, overload due to heavy snow or ice may cause wiper linkage damage. Always clear ice and heavy snow from the windshield before using the windshield wipers.

If the overload is caused by an electrical problem and not snow or ice, be sure to get it fixed.

Fuses and Circuit Breakers

The wiring circuits in the vehicle are protected from short circuits by a combination of fuses and circuit breakers. This greatly reduces the chance of damage caused by electrical problems.

⚠ Danger

Fuses and circuit breakers are marked with their ampere rating. Do not exceed the specified amperage rating when replacing fuses and circuit breakers. Use of an oversized fuse or circuit breaker can result in a vehicle fire. You and others could be seriously injured or killed.

To check a fuse, look at the silver-colored band inside the fuse. If the band is broken or melted, replace the fuse. Be sure to replace a bad fuse with a new one of the identical size and rating.

Fuses of the same amperage can be temporarily borrowed from another fuse location, if a fuse goes out. Replace the fuse as soon as possible.

Engine Compartment Fuse Block

The engine compartment fuse block is in the engine compartment, on the driver side of the vehicle.

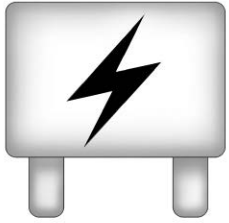

Lift the cover to access the fuse block.

Caution

Spilling liquid on any electrical component on the vehicle may damage it. Always keep the covers on any electrical component.

A fuse puller is available in the left instrument panel fuse block.

The vehicle may not be equipped with all of the fuses, relays, and features shown.

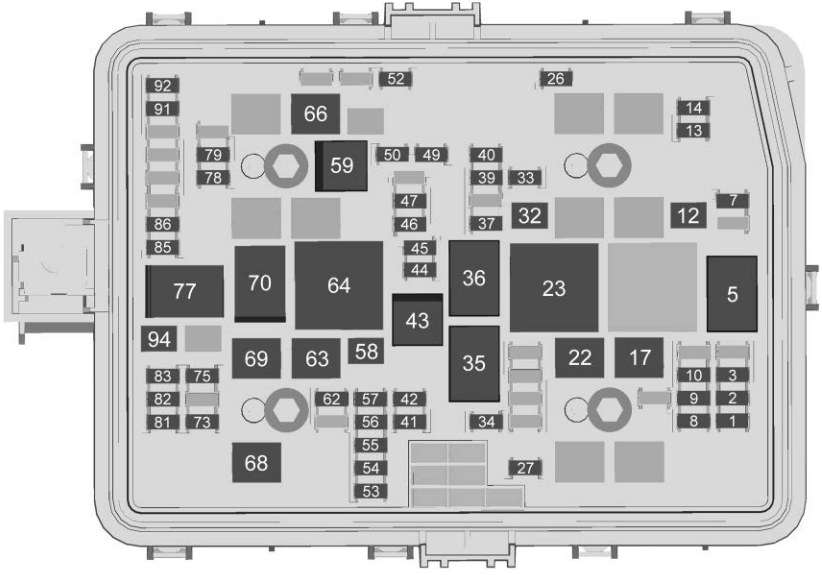

Fuses	Usage
1	Left high-beam

Fuses	Usage
2	Right high-beam
3	Wash pump

Fuses	Usage
7	Upfitter 3 & 4
8	Fog lamp
9	Regulated voltage control
10	Upfitter 1 & 2
12	Four wheel drive TREC
13	Left rear stop/ turn lamp
14	Right rear stop/ turn lamp
17	IECL 1
22	IECL 2
26	Right rear amber
27	Horn
32	Rear defog
33	Heated Mirror
34	Left park lamps
37	–
39	Air dryer

Fuses	Usage
40	Miscellaneous ignition
41	Trailer park lamp
42	Right park lamp
44	Fuel pump
45	Low air pressure
46	Engine control module ignition
47	Transmission ignition
49	Transmission control module battery
50	A/C clutch
52	Front wiper
53	Stop lamp
54	Trailer reverse lamp
55	Trailer backup lamp
56	–
57	Left rear amber

Fuses	Usage
58	Trailer brake
62	Integrated chassis control module
63	Accessory power
66	Auxiliary underhood electrical center
68	Anti-lock braking system pump
69	Spare
73	Left trailer stop/ turn lamp
75	Spare
78	Engine control module battery
79	Cab heater Aux battery
81	Right trailer stop/ turn lamp
82	FTZM
83	Anti-lock braking system valve

Fuses	Usage
84	Trailer battery
85	Engine
86	Engine control module
91	Engine control module throttle control
92	Cooling fan clutch

Relays	Usage
5	Wash pump
23	Defog rear
35	Park lamp
36	Run/crank
43	Low air presssure
59	A/C control
64	Left rear amber
70	Spare
77	ECM

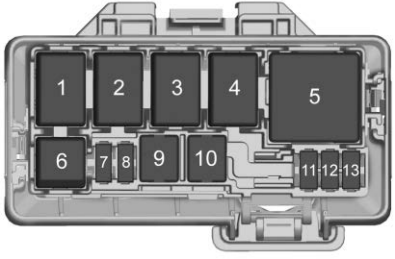

Auxiliary Fuse Block

Fuses	Usage
7	–
8	Diesel exhaust fluid heater
9	Starter
10	Fuel heater
11	Smart sensors
12	SCRPM
13	–

Relays	Usage
1	Starter
2	Fuel heater
3	SCR control
4	Fuel pump
5	Fan driver
6	Powertrain Sensor

Instrument Panel Fuse Block (Right)

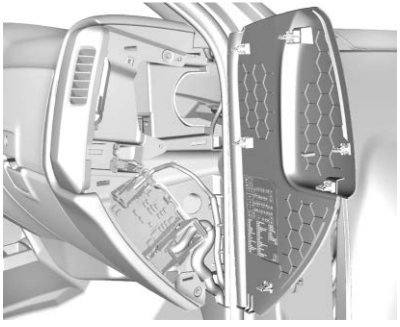

The right instrument panel fuse block access door is on the passenger side edge of the instrument panel.

Pull off the cover to access the fuse block.

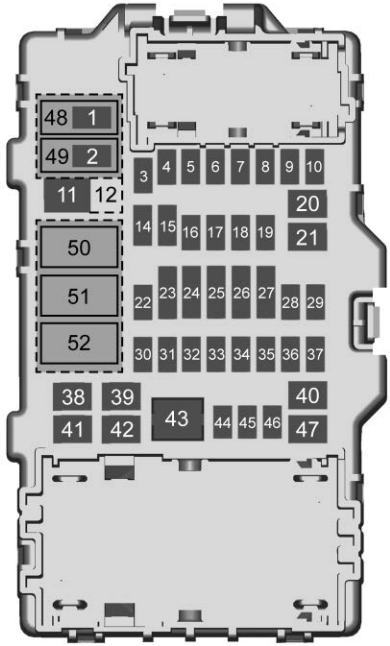

The vehicle may not be equipped with all of the fuses, relays, and features shown.

Fuses	Usage
1	Accessory power outlet 3
2	Accessory power outlet 4
3	Upfitter Switch 3 & 4
6	Upfitter Switch 3 & 4
7	Body control module 4
8	Body control module 8
9	–
10	Cargo lamp
15	Steering wheel controls
18	Radio
19	–
20	Sunroof
23	Airbag/Info
26	Export/Power take off/ Special equipment option/Battery 1
27	USB ports/Obstacle detection
28	Body control module 2
31	Upfitter 3

Fuses	Usage
32	Special equipment option/Battery 2
35	Air conditioning inverter
37	–
39	Upfitter 4
42	Right door window motor
43	Front blower
44	Infotainment
45	Body control module 6
46	Body control module 7
47	Passenger seat

Relays	Usage
50	Retained accessory power/Accessory
51	Upfitter 3
52	Upfitter 4

Instrument Panel Fuse Block (Left)

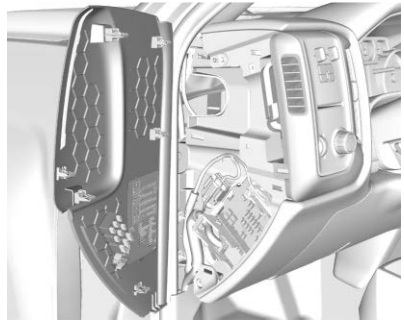

The left instrument panel fuse block access door is on the driver side edge of the instrument panel.

Pull off the cover to access the fuse block.

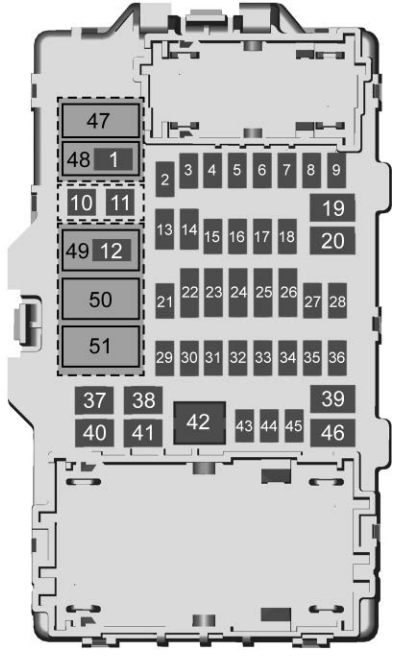

The vehicle may not be equipped with all of the fuses, relays, and features shown.

Fuses	Usage
1	Accessory power outlet 2
2	Special equipment option/Retained accessory power
3	Universal garage door opener/Interior rearview mirror
5	Upfitter Switch 1 & 2
6	Body control module 3
7	Body control module 5
8	Mirror window module
9	–
10	Accessory power outlet/Retained accessory power
11	Accessory power outlet battery
12	Accessory power outlet 1/Cigarette lighter
13	Discrete logic ignition switch
14	Switch backlighting
17	Body control module 1

Fuses	Usage
18	Upfitter Switch 1 & 2
19	Upfitter 2
22	Heating, ventilation, and air conditioning/ Auxiliary heating, ventilation, and air conditioning/Ignition
23	Instrument cluster/ Ignition sensing diagnostic module/ Ignition
24	–
25	Data link connector/ Driver seat module
26	Passive entry/Passive start/Heating, ventilation, and air conditioning
27	–
28	–
29	–
30	Special equipment option/Automatic level control

Fuses	Usage
31	Accessory/Run/Crank
32	Air dump
33	–
34	Instrument cluster
36	–
37	Upfitter 1
38	–
40	Left doors
41	Driver power seat
43	Left heated, cooled or ventilated seats (if equipped)
44	Right heated, cooled or ventilated seats (if equipped)
45	–

Relays	Usage
48	Upfitter 2
49	Retained accessory power/Accessory
50	Run/Crank
51	Upfitter 1

Wheels and Tires

Tires

Tire Warnings

⚠ Warning

To prevent property damage, personal injury, and/or death always follow these instructions when mounting tires on wheels:

- Only personnel who have had proper training and experience should mount or remove tires from rims or wheels.
- Use only heavy-duty rims or approved rims for radial tires. It may be necessary to contact your wheel and rim

(Continued)

Warning (Continued)

distributor to determine if your rims are approved for radial tires.

- If a tube is to be used, make sure special radial tire tubes are used because of the increased flexing of the sidewalls on radial tires.
- Never use antifreeze, silicones, or petroleum-based lubricants when mounting radial tires. Only an approved lubricant should be used as an aid for mounting tires.
- Always inflate tires in a safety cage.

⚠ Warning

To prevent property damage, personal injury, or death:

- Do not mix stud-piloted wheels or fasteners with hub-piloted wheels or fasteners. Mixing wheel types may cause premature wheel failure.
- Do not change from steel wheels or a steel inner and aluminum outer wheel combination to aluminum wheels without changing the mounting hardware since the thicker aluminum wheels require longer studs. In some cases with flange nut mounting systems, changing the hub and stud assembly may be required. Improperly

(Continued)

Warning (Continued)

mixing components could cause wheel or fastener failures.

- Do not mix foreign (not made in North America) wheel mounting parts with domestic (made in North America) parts. Many foreign wheel components look similar to, but are not exactly the same as, domestic made components. Mixing components can cause wheel or fastener failures.

⚠ Warning

To prevent property damage, personal injury, and/or death, do not mount tube-type tires

(Continued)

Warning (Continued)

on tubeless wheels or tubeless tires on tube-type wheels.

Tire Pressure

⚠ Warning

To prevent property damage, personal injury, and/or death, for field maintenance, only inflate and load tires to the maximum of the least-rated tire on the axle. Due to tire manufacturers re-marking tires to conform to the SI (metric) system, tires marked with old and new loads or inflation pressures could be placed on the same vehicle.

Maintaining the correct amount of air pressure is a very important maintenance practice to ensure safe vehicle operation and long life for the tires.

Failure to maintain correct inflation pressure may result in sudden tire destruction, improper vehicle handling, and may cause rapid and irregular tire wear. Therefore, inflation pressures should be checked daily and always before long-distance trips.

Underinflation

Do not allow tires to become underinflated. Increased flexing due to underinflation causes heat buildup within the tire components. This leads to reduced strength, breakdown of the rubber compounds and possible separation of the tire components (such as ply and tread separation and reduced retreadability).

Underinflation is also the primary cause of blowouts. In addition, low inflation causes an increase in rolling resistance. This results in reduced fuel mileage, a loss in tread life, and uneven wear due to increased tread movement. To determine proper inflation, refer to the tire inflation range stated on the tire sidewall and the tire manufacturer's tire load-pressure charts.

Checking Inflation

Check the tires daily and always before long-distance trips

Follow the tire manufacturer's recommended cold inflation pressure for the tire size, type, load range (ply rating), and axle loading typical for your operation. Each steer axle tire load will equal one-half the steer axle loading; each drive tire load will be one-quarter the axle loading, if fitted with four tires.

Always check the inflation pressure when the tires are cold. Never bleed air from hot tires to relieve normal pressure buildup. Normal increases in pressure during operation will be 69 to 103 kPa (10 to 15 psi), which is allowable in truck tires. Tires on the same axle should have the same air pressure as the corresponding other tire(s) on that axle. All tires on the steering axle should be within 21 kPa (3 psi) of each other. All drive axle tires should be within 34 kPa (5 psi) of each other.

To minimize rim corrosion, it is important to keep moisture from the inside of tires and proper selection of air compressor equipment, proper air line routing, and the use of shop air dryers is strongly recommended to prevent moisture in the high-pressure air used for tire inflation.

Tire Inspection

⚠ Warning

To prevent property damage, personal injury, and/or death, always maintain your tires in good condition. Frequently check and maintain correct inflation pressures as specified by tire manufacturers. Inspect periodically for abnormal wear patterns and repair/replace cut or broken tire casing. Always use experienced, trained personnel with proper equipment and correct procedures to mount or remove tires and wheels.

Check the condition of the tires for abnormal wear patterns and proper inflation pressures. Cut or broken tire casings must be repaired or replaced.

Check the tread depth and tire inflation. Check to see if the tread is evenly worn. Minimum tread depth is 3 mm (4/32 in) on steering tires. Look for cuts or other damage to the tread or sidewalls. Check for missing, broken, or damaged valve cap and stem.

Check that the dual wheels, if equipped, are evenly separated, and that the tires are not touching one another.

Tires should be inspected for the following conditions. If any are present, the tire should be removed and repaired, retreaded, or scrapped as the condition indicates.

- Any blister, bump, or raised portion anywhere on the surface of the tire tread or sidewall (other than a bump made by a repair). These indicate the start of internal separation.
- Any cut that reaches to the belt or ply cords or any cut that is large enough to grow in size and depth.
- Any nail or puncturing object.
- If any stone or object is held by a tread groove and is starting to drill into the tread base, remove the object.

Proper tire inflation, toe-in adjustment, loads, and road speeds are important factors governing tire life, steering ease, maneuverability, fuel economy, and ride quality.

Tire Rotation

Several types of tire rotation are possible:

- Steer tires that have developed some type of irregular wear pattern can be rotated to drive axles if rib tires are being used on all wheel positions. Applying steer tires to a drive position will often wear off the irregularities, and they can be moved back to the steer axles or run out to retread stage on the rear axle.
- Another rotation possibility for vehicles with rib tires in all wheel positions is to break in the new steer tires in the drive axle positions, then move them to steer axles. This will wear away tread rubber relatively quick in the early life of a tire when it is most likely to develop an unusual wear pattern.
- Drive axle tires may be placed on the other end of the same axle so that direction of rotation is reversed. This is often helpful if a heel and toe or alternate wheel nut wear pattern has developed.

Rotation is advisable if:

- If front (steering) axle tires become irregularly worn, move to rear position.
- In a dual assembly, reverse the position of the tires if one tire wears much faster than its mate.
- On the drive axle, if heel and toe wear or alternate wheel nut wear occurs, rotating the tires from one end of the axle to the other end of the axle may help even out this wear.

When It Is Time for New Tires

Tire Replacement

⚠ Warning

To prevent property damage, personal injury, and/or death, it is recommended that you never

(Continued)

Warning (Continued)

replace vehicles tires with lower road speed rating. However, in the event you should change/replace vehicle tires with those of a lower road speed rating, it will be necessary for you to take your vehicle to the dealer to have the road speed engine parameter changed to match the new tire rating.

Retread tires are not recommended for use on steering axles of trucks.

- Front (Steering) Axle — Tires must be removed when the tread is worn to 3 mm (4/32 in) or less. Retread or rotate worn tires to drive position.
- Rear Axle — Tires must be removed when the tread is worn to 2 mm (2/32 in).

If a rib tire is used on the front axle and lug or off-road type on the rear axle positions:

- Front (Steering) Axle — Replace the front tires when the tread is worn to 3 mm (4/32 in) or less.
- Rear Axle — Tires must be removed when the tread is worn to 2 mm (2/32 in) or less. Tires identified with the word regroovable molded on the sidewall can be regrooved. A minimum of 2.38 mm (3/32 in) of under tread must be left at the bottom of the grooves.

Never mix bias and radial tires on this vehicle.

It is recommended for best overall performance that only radial tires be used on this vehicle.

Never mix different tire sizes or constructions on the same axle.

Tire replacement should be to tires with GHG emission performance as good, or better than tires originally equipped on the vehicle. Consult with the tire manufacturer for tire specifications.

Replacement Tire Size and Load Rating

⚠ Warning

To prevent property damage, personal injury, and/or death, do not load tires beyond their rated capacity as this decreases tire life, requiring more frequent replacement of tires. Overloading creates an unsafe condition that may result in sudden air loss from a tire failure resulting in a crash.

The Tire/Certification Label found on the driver-side door frame of your vehicle, indicates the size of the original equipment tires installed on each axle of the vehicle.

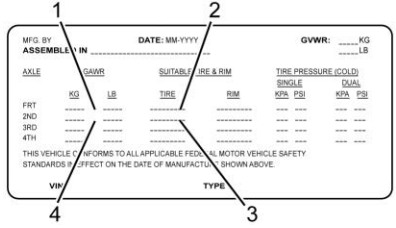

Label Example

1. Gross Weight Rating of the Front Axle
2. Tire Size for Front Axle
3. Tire Size for Rear Axle
4. Gross Weight Rating of the Rear Axle

The Tire/Certification Label is typically found on the driver-side door frame of the vehicle.
It indicates the size of the original equipment tires installed on each axle of the vehicle.

The load rating of the tires installed on your vehicle at the time of production is at or in excess of the Gross Axle Weight Rating (GAWR) on the Tire/Certification Label.
When replacing the tires be sure the replacement tire load rating (listed separately in pounds and kilograms on the tire sidewall for single or dual applications) multiplied by the number of tires on that axle is equal to or higher than the specified listed Steer Axle or Drive Axle GAWR. Failure to do so will adversely affect maximum load-carrying capacity. Tires with the same size specifications do not always have the same load specification. See *Vehicle Load Limits* ⇨ *203*.

Dual Tires Matching

Dual tires should be matched using tires of equivalent size. Tires which differ more than 6 mm (1/4 in) in diameter or 19 mm (3/4 in) in circumference should not be mounted on the same dual wheel assembly.

Wear

Radial tires can exhibit three types of normal wear patterns: even, erosion, or chamfer.

Even wear is a sign that the tire is being properly used and maintained.

Erosion wear has also been called rolling wear, channel, or river wear. Erosion wear is found more often at free rolling tires. This is an indication that the tire is being used in a slow wearing operation. What happens is that the belt plies are held very rigid and the tread is not allowed to distort as it passes through the contact area. Wear will only occur at the edge of the tread. No corrective action is required. If erosion gets to be 2 mm (1/16 in) or more, the tire may be rotated to a drive axle.

Chamfer or shoulder wear with tires inflated properly, is a normal tendency of most radial tire designs. If both inside and outside shoulders are wearing evenly around the tire, no further action is required. Overinflation is not effective in correcting this effect.

Irregular Wear

If irregular wear is present, check the axle alignment, tire pressure, wheel balance, shock and suspension component condition, and wheel bearing end play. This condition not only shortens tire life, but will adversely affect the handling of your vehicle.

Rotating tires from one wheel position to another is a way often used to even out many types of irregular wear or to avoid it altogether. See *Tire Rotation* ⇨ *328*.

Irregular wear can be minimized by:

- Using the right inflation pressure for the load being carried.
- Maintaining proper front wheel alignment especially toe-in to specifications.
- Maintaining proper tire and wheel balance.
- Maintaining shock absorbers and suspension components.
- Maintain proper wheel bearing adjustment.

Wheel Alignment and Tire Balance

Maintaining front axle alignment is very important to achieving maximum tire life and vehicle control. Inspecting steer axle tires in the first 5 000 km (3,000 mi) – 16 000 km (10,000 mi) of service miles will generally show if tires are wearing normally.

- Rapid outside shoulder wear on both tires indicates too much toe-in.
- Rapid inside shoulder wear on both tires indicates too much toe-out.
- Excessive wear on the inside or outside of one steer tire, but not the other, can indicate a toe-in or toe-out condition coupled with a misaligned front or rear axle.
- Pulling to the right or left can indicate misalignment of the front or rear axle, unequal tire pressures, or a damaged / mismatched tire.

Wheel Replacement

⚠ Warning

To prevent property damage, personal injury, and/or death always follow these instructions when mounting tires on wheels:

- Only personnel who have had proper training and experience should mount or remove tires from rims or wheels.
- Use only heavy-duty rims or approved rims for radial tires. It may be necessary to contact your wheel and rim distributor to determine if your rims are approved for radial tires.

(Continued)

Warning (Continued)

- If a tube is to be used, make sure special radial tire tubes are used because of the increased flexing of the sidewalls on radial tires.
- Never use antifreeze, silicones, or petroleum-based lubricants when mounting radial tires. Only an approved lubricant should be used as an aid for mounting tires.
- Always inflate tires in a safety cage.

⚠ Warning

To prevent property damage, personal injury, or death:

(Continued)

Warning (Continued)

- Do not mix stud-piloted wheels or fasteners with hub-piloted wheels or fasteners.
- Do not mix foreign (not made in North America) wheel mounting parts with domestic (made in North America) parts. Many foreign wheel components look similar to, but are not exactly the same as, domestic made components. Mixing components can cause wheel or fastener failures.
- Do not change from aluminum wheels to steel wheels, or vice-versa, without changing the mounting hardware. In some cases with flange nut mounting systems, changing the hub and stud assembly

(Continued)

Warning (Continued)

may be required. Mixing components could cause wheel or fastener failures.

⚠ Warning

To prevent property damage, personal injury, and/or death, when installing the tire and rim assembly on disc brake-equipped axles, make sure the tire valve stem clears the brake caliper. The use of either a GM valve stem retainer or a tire manufacturer's stem forming tool is the only acceptable method of obtaining clearance when necessary. Failure to obtain proper clearance may result in rapid tire deflation.

Check for damaged or bent wheels. Check to see that all lug nuts are present and not loose. Look for rust trails around the nuts. Ensure that no cracks or damage are present at wheel mount holes.

Check for leaks on outboard or inboard sides of wheel. Verify that the oil level in the hub is correct.

Wheel and Tire Balancing

Out-of-round or out-of-balance wheels or tires can cause vehicle vibration, bounce, and shimmy. Replace damaged or out-of-round wheels. Out-of-round tires and wheel assemblies can sometimes be corrected by rechecking the tire relative to the wheel. The tire and wheel assembly should thereafter be dynamically balanced and reinspected while spinning for an out of round condition.

Hub-Piloted Wheel Installation Procedure

⚠ Warning

To prevent property damage, personal injury, and/or death, use only the same type and style wheels and mounting hardware to replace original parts. Failure to do so may result in an assembly that looks fine but does not fit together properly. This could cause wheel or fastener failures.

Out-of-round tires and wheel assemblies can sometimes be corrected by re-clocking the tire relative to the wheel.

Tightening procedure for disc wheels with flange nuts (hub-piloted):

1. Clean the mating surfaces of the hub, drum, and wheel(s) as well as the wheel studs and wheel nuts with a wire brush prior to assembly.

2. Lubricate the two-piece wheel nuts by putting two drops of oil in the slot between the nut and washer and spin the washer to spread the oil around the nut-to-washer contact surface.
3. Carefully lubricate the wheel stud threads by wiping them with a freshly oiled cloth. Do not get the oil on any other surfaces or the wheel clamping effectiveness will be reduced.
4. To prevent aluminum wheels from getting stuck on the hub due to corrosion, apply a thin coat of anti-seize compound or disc brake corrosion control grease to the hub pilot pads only.
5. Slide the inner and outer wheels (if duals) or the steer wheel over the wheel studs and onto the pilot pads of the hub. Care must be taken to avoid damage to the stud threads while positioning the wheel. Ensure that the wheel is resting on the pilot pads and is against the brake drum.
6. Hand-start all wheel nuts to prevent cross-threading.

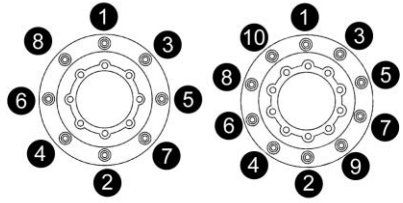

7. Starting with the nut at 12 o'clock position and using the appropriate star or crisscross pattern, run the wheel nuts down the wheel studs with an impact wrench until they are snug against the wheel. The purpose of this step is to snug the wheel(s) in the correct position, not to apply the final torque. The tightening of each nut should be stopped immediately when the wheel is contacted, and result in a wheel nut torque well below the final specified torque.
8. Use a calibrated torque wrench to apply the specified torque to each wheel nut in the sequence specified in the wheel nut torque sequence diagram above. See *Capacities and Specifications* ⇨ *401*.
9. All wheels undergo a process called joint settling when placed in service after a wheel installation has been performed. This process results in a reduction in the torque on the wheel nuts. To correct this condition, operate the vehicle normally for approximately 80 km (50 mi), then use a calibrated torque wrench to re-torque the wheel nuts to specification using the appropriate pattern shown in the wheel nut torque sequence diagram.
10. As part of a daily pretrip inspection, look for loose or missing wheel nuts. Also, look for rust streaks extending outward from the wheel nuts. This can be an indicator that

one or more wheel nuts are loose, even if they cannot be turned by hand. Normal periodic maintenance should also include checking the wheel nut torque with a torque wrench.

Wheel Nut Torque Maintenance

Tighten and maintain the wheel and rim mounting nuts to the proper torque. Loose nuts or overtightened nuts can lead to premature wear and possible failure of the wheel, rim, and/or mounting hardware.

Used Replacement Wheels

⚠ Warning

Replacing a wheel with a used one is dangerous. How it has been used or how far it has been driven may be unknown. It could fail suddenly and cause a crash. When replacing wheels, use a new GM original equipment wheel.

Tire Chains

Caution

To prevent property damage, never drive with chains on the front tires of a four-wheel drive vehicle without also putting them on the rear tires. The lack of rear chains could cause the rear of the vehicle to slide and swing around.

Refer to the chain manufacturer's recommendation for correct tire chain usage, installation, and removal.

If a Tire Goes Flat

⚠ Warning

To prevent property damage, personal injury, and/or death, if wheels or tires must be changed, obtain expert tire service help. Mounting and demounting of tires should only

(Continued)

Warning (Continued)

be performed by qualified personnel using necessary safety procedures and equipment.

Jump Starting

Jump Starting - North America

For more information about the vehicle batteries, see *Battery - North America* ⇨ *308*.

If the vehicle's batteries are run down, you may want to use another vehicle and some jumper cables to start your vehicle. Be sure to use the following steps to do it safely.

⚠ Warning

WARNING: Battery posts, terminals, and related accessories contain lead and lead compounds, chemicals known to the State of California to cause cancer and birth defects or other reproductive harm. Batteries also contain other chemicals known to the State of California to cause cancer. **WASH HANDS AFTER**

(Continued)

Warning (Continued)

HANDLING. For more information go to www.P65Warnings.ca.gov/passenger-vehicle.

See *California Proposition 65 Warning* ⇨ *286* and the back cover.

⚠ Warning

Batteries can hurt you. They can be dangerous because:

- They contain acid that can burn you.
- They contain gas that can explode or ignite.
- They contain enough electricity to burn you.

If you do not follow these steps exactly, some or all of these things can hurt you.

Caution

If the jumper cables are connected or removed in the wrong order, electrical shorting may occur and damage the vehicle. The repairs would not be covered by the vehicle warranty. Always connect and remove the jumper cables in the correct order, making sure that the cables do not touch each other or other metal.

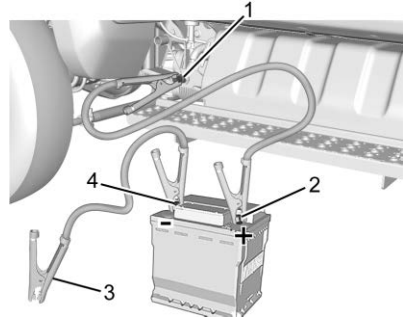

1. Discharged Battery Remote Positive Terminal
2. Good Battery Positive Terminal
3. Discharged Battery Negative Grounding Point (on the battery or on the vehicle frame)
4. Good Battery Negative Terminal

The jump start negative grounding point (3) and the remote positive terminal (1) for the discharged battery are on the driver side of the vehicle beneath the driver side door.

The jump start positive terminal (2) and negative terminal (4) are on the battery of the vehicle providing the jump start.

The remote positive terminal jump start connection for the discharged batteries is under a red cover. Remove the cover to expose the terminal.

1. Check the other vehicle. It must have a 12-volt battery with a negative ground system.

Caution

If the other vehicle does not have a 12-volt system with a negative ground, both vehicles can be damaged. Only use a vehicle that has a 12-volt system with a negative ground for jump starting.

2. With the vehicle having two batteries, you should know before you begin that, especially in cold weather, you may not be able to get enough power from a single battery in another vehicle to start your diesel engine. Using the battery that is closer to the starter will reduce electrical resistance.
3. Get the vehicles close enough so the jumper cables can reach, but be sure the vehicles are not touching each other. If they are, it could cause an unwanted ground connection. You would not be able to start your vehicle, and the bad grounding could damage the electrical systems.

   To avoid the possibility of the vehicles rolling, set the parking brake firmly on both vehicles involved in the jump start procedure. Put the automatic transmission in P (Park) or a manual transmission in Neutral before setting the parking brake. If you have a four-wheel-drive vehicle, be sure the transfer case is in a drive gear, not in N (Neutral).

Caution

If any accessories are left on or plugged in during the jump starting procedure, they could be damaged. The repairs would not be covered by the vehicle warranty. Whenever possible, turn off or unplug all accessories on either vehicle when jump starting.

4. Turn the ignition off on both vehicles. Unplug unnecessary accessories plugged into the accessory power outlets. Turn off the radio and all the lamps that are not needed. This will avoid sparks and help save both batteries. And it could save the radio!
5. Locate the positive (+) and negative (−) terminal locations on the other vehicle.

⚠ Warning

Using a match near a battery can cause battery gas to explode. People have been hurt doing this, and some have been blinded. Use a flashlight if you need more light.

Battery fluid contains acid that can burn you. Do not get it on you. If you accidentally get it in your eyes or on your skin, flush the place with water and get medical help immediately.

⚠ Warning

Fans or other moving engine parts can injure you badly. Keep your hands away from moving parts once the engine is running.

6. Check that the jumper cables do not have loose or missing insulation. If they do, you could get a shock. The vehicles could be damaged too.

   Before you connect the cables, here are some basic things you should know. Positive (+) will go to positive (+) or to a remote positive (+) terminal if the vehicle has one. Negative (−) will go to the vehicle frame or the battery negative (−) under the battery cover.

   Do not connect positive (+) to negative (−) or you will get a short that would damage the battery and maybe other parts too.

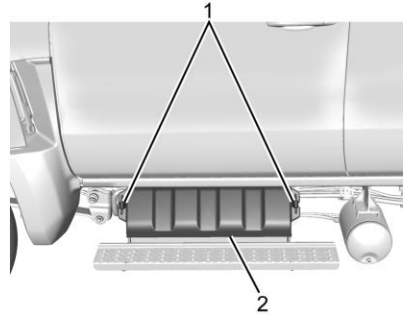

7. Remove the battery cover (2) by disengaging the battery cover retaining straps (1).
8. Connect one end of the red positive (+) cable to the remote positive (+) terminal (1) of the vehicle with the discharged battery.
9. Do not let the other end touch metal. Connect it to the positive (+) terminal (2) of the good battery. Use a remote positive (+) terminal if the vehicle has one.

10. Connect one end of the black negative (−) cable to the negative (−) terminal (4) of the good battery. Use a remote negative (−) terminal if the vehicle has one.

    Do not let the other end touch anything until the next step.

11. Connect the other end of the negative (−) cable to a negative grounding point (3) on the battery negative terminal or on the vehicle frame.

12. Start the vehicle with the good battery and run the engine for a while.

13. Try to start the vehicle that had the dead batteries. If it will not start after a few tries, it probably needs service.

Caution

If the jumper cables are connected or removed in the wrong order, electrical shorting

(Continued)

Caution (Continued)

may occur and damage the vehicle. The repairs would not be covered by the vehicle warranty. Always connect and remove the jumper cables in the correct order, making sure that the cables do not touch each other or other metal.

Jumper Cable Removal

Reverse the sequence exactly when removing the jumper cables.

After starting the disabled vehicle and removing the jumper cables, allow it to idle for several minutes.

Towing the Vehicle

⚠ Warning

To prevent property damage, personal injury, and/or death, always use both tow hooks to prevent possible overloading and breaking of individual hooks. This vehicle is equipped with dual tow hooks for recovery purposes only.

⚠ Warning

To prevent property damage, personal injury, or death, observe the following warning:

- Always install wheel chocks when manually releasing the parking brake, or the vehicle can roll.
- For towing, make sure the vehicle is securely connected to the tow vehicle and tow vehicle parking

(Continued)

Warning (Continued)

brake is applied before releasing the disabled vehicle's parking brake.

Caution

To prevent property damage, observe the following: Due to many variables that exist in towing, positioning, and lifting, towing is the sole responsibility of the towing operator.

- If lifting and towing the vehicle from the rear, disconnect the driveshaft at the front axle location.
- If lifting and towing the vehicle from the front, disconnect the driveshaft at the rear axle location.

(Continued)

Caution (Continued)

- If towing the vehicle and neither end is lifted off the ground, both driveshafts must be disconnected at the axle locations.

Important factors to keep in mind when using tow hooks:

- Use both tow hooks when retrieving the vehicle.
- Use a slow steady pull; do not jerk on the hooks.
- Tow hooks are not designed for towing, only for retrieval.

Before moving the towed vehicle, check for adequate road clearance of vehicle components. Unload the towed vehicle prior to towing to reduce any abnormal loads to the vehicle components resulting from the towing procedures. Before towing, be sure to fully release the parking brake. See *Parking Brake* ⇨ *231*.

Tow Hooks

Two tow hooks are recessed into the front bumper of the vehicle.

Towing Vehicle with Front Wheels Suspended

Caution

To prevent vehicle, engine, or transmission damage, vehicles should not be towed, even short

(Continued)

Caution (Continued)

distances, without suspending the rear wheels or removing the axle shafts or propeller shaft.

In the event the chassis is equipped with a tandem axle and the vehicle is to be towed from the front, the forward rear axle may be raised to clear the road surface and secured to the frame by chains or U-bolts, allowing only the rear axle to contact the road surface. Axle shafts must be removed from the rear axle assembly. The wheel hub ends must be covered to prevent loss of axle lubricant and entrance of contaminants. Use extreme care in securing the chains or U-bolts to prevent possible damage of brake lines, hoses, or other components.

Caution

To avoid severe transmission damage, when lifting and towing the vehicle from the front, be sure to disconnect the driveshaft at the rear axle location.

When it is necessary to tow a vehicle with the front wheels suspended, extra precautions must be taken to avoid transmission or differential damage. Proceed as follows:

Remove the axle shafts from the axle assembly to prevent the wheels from driving the differential and the transmission. The wheel hub ends must be covered to prevent loss of axle lubricant and entrance of contaminants. If axle shafts are not removed, removal of propeller shafts at the rear axle will be required.

Towing Vehicles with Driver Controlled Differential Lock

Removing Axle Shafts Before Towing

Caution

To prevent differential and/or transmission damage on vehicles that must be towed to a service facility with the drive axle wheels on the ground, it is necessary to remove the axle shafts before the vehicle is towed. Failure to heed this caution may result in vehicle and/or engine component damage.

Caution

Do not use a chisel or wedge to loosen axle shafts and dowels. The chisel or wedge can damage hub, axle shafts, and oil seals if

(Continued)

Caution (Continued)

used. Failure to heed this caution may result in vehicle and/or engine component damage.

One of the axle shafts has two sets of splines: one set to engage with the differential side gear and one set to engage with the shift collar for the differential lock. It may be necessary to rotate the shaft slightly to align the side gear spline teeth with the clutch collar teeth in order to remove the axle shaft.

1. Shift the main differential to the locked (engaged) position.
2. Remove the cap screws and washers or stud nuts and washers from the flanges of both axle shafts.
3. Loosen the tapered dowels in the flanges of both axle shafts by holding a 3.8 cm (1.5 in) diameter brass drift or hammer against the axle shaft center and hitting it with a 2–3 kg (5–6 lb) hammer.
4. Remove the tapered dowels and both axle shafts from the axle assembly.
5. Assemble a cover over the openings of both wheel ends to prevent the loss of lubricant and keep dirt from the wheel bearing cavities.

Installing Axle Shafts

1. Remove the covers from the wheel ends.
2. Shift the differential lock to the locked (engaged) position.
3. Install the driver and passenger side axle shafts as follows:
   - 3.1. Place the gaskets on the wheel hub studs.
   - 3.2. Push the passenger side axle shaft into the wheel end and housing until the shaft stops against the differential shift collar.
   - 3.3. Push the axle shaft farther into the housing until the shaft stops against the differential side gear.
   - 3.4. Push down on the axle shaft flange and rotate the shaft until the splines of the shaft and side gear are engaged.
   - 3.5. Push the axle shaft completely into the housing until the axle shaft flange and gasket are flush against the wheel hub.
   - 3.6. Install the driver side axle shaft and gasket into the wheel end.
4. If tapered dowels are required, install them at each stud and into the flange of the axle shaft. Use a punch or drift and hammer if needed.
5. Install the fasteners and tighten to the correct torque value. Refer to the appropriate service manual section.

Towing Vehicle with Rear Wheels Suspended

Caution

To prevent damage to the cab roof or air deflector when towing the vehicle backwards (rear wheels suspended), the air deflector must be removed. Failure to heed this caution may result in vehicle and/or engine component damage.

Caution

To avoid severe transmission damage, when lifting and towing the vehicle from the rear, be sure to disconnect the driveshaft at the front axle location.

Whenever possible, it is preferable to tow a disabled vehicle from the rear by raising the rear of the chassis by the rear axles.

When towing a vehicle with the rear of the chassis suspended, the front wheels must be locked in the straight ahead position.

Appearance Care

Exterior Care

Locks

Locks are lubricated at the factory. Use a de-icing agent only when absolutely necessary, and have the locks greased after using. See *Recommended Fluids and Lubricants* ⇨ *391*.

Washing the Vehicle

To preserve the vehicle's finish, wash it often and out of direct sunlight.

⚠ Warning

Do not power wash any part of the vehicle’s interior, including the vinyl floor covering. This could damage safety and other systems in the vehicle, which would not be covered by the vehicle warranty.

Caution

Do not use petroleum-based, acidic, or abrasive cleaning agents as they can damage the vehicle's paint, metal, or plastic parts. If damage occurs, it would not be covered by the vehicle warranty. Approved cleaning products can be obtained from your dealer. Follow all manufacturer directions regarding correct product usage, necessary safety precautions, and appropriate disposal of any vehicle care product.

Caution

Avoid using high-pressure washes closer than 30 cm (12 in) to the surface of the vehicle. Use of power washers exceeding 8,274 kPa (1,200 psi) can result in damage or removal of paint and decals.

Caution

Do not power wash any component under the hood that has this symbol.

This could cause damage that would not be covered by the vehicle warranty.

If using an automatic car wash, follow with the car wash instructions. The windshield wiper must be turned off. Remove any accessories that may be damaged or interfere with the car wash equipment.

Rinse the vehicle well, before washing and after, to remove all cleaning agents completely. If they are allowed to dry on the surface, they could stain.

Dry the finish with a soft, clean chamois or an all-cotton towel to avoid surface scratches and water spotting.

Finish Care

Application of aftermarket clearcoat sealant/wax materials is not recommended. If painted surfaces are damaged, see your dealer to have the damage assessed and repaired. Foreign materials such as calcium chloride and other salts, ice melting agents, road oil and tar, tree sap, bird droppings, chemicals from industrial chimneys, etc., can damage the vehicle's finish if they remain on painted surfaces. Wash the vehicle as soon as possible. If necessary, use non-abrasive cleaners that are marked safe for painted surfaces to remove foreign matter.

Occasional hand waxing or mild polishing should be done to remove residue from the paint finish. See your dealer for approved cleaning products.

Do not apply waxes or polishes to uncoated plastic, vinyl, rubber, decals, simulated wood, or flat paint as damage can occur.

Caution

Machine compounding or aggressive polishing on a basecoat/clearcoat paint finish may damage it. Use only non-abrasive waxes and polishes that are made for a basecoat/clearcoat paint finish on the vehicle.

To keep the paint finish looking new, keep the vehicle garaged or covered whenever possible.

Protecting Exterior Bright Metal Moldings

Caution

Failure to clean and protect the bright metal moldings can result in a hazy white finish or pitting. This damage would not be covered by the vehicle warranty.

The bright metal moldings on the vehicle are aluminum, chrome, or stainless steel. To prevent damage always follow these cleaning instructions:

- Be sure the molding is cool to the touch before applying any cleaning solution.
- Use only approved cleaning solutions for aluminum, chrome, or stainless steel. Some cleaners are highly acidic or contain alkaline substances and can damage the moldings.
- Always dilute a concentrated cleaner according to the manufacturer’s instructions.
- Do not use cleaners that are not intended for automotive use.
- Use a nonabrasive wax on the vehicle after washing to protect and extend the molding finish.

Cleaning Exterior Lamps/ Lenses, Emblems, Decals, and Stripes

Use only lukewarm or cold water, a soft cloth, and a car washing soap to clean exterior lamps, lenses, emblems, decals and stripes. Follow instructions under "Washing the Vehicle" previously in this section.

Lamp covers are made of plastic, and some have a UV protective coating. Do not clean or wipe them while they are dry.

Do not use any of the following on lamp covers:

- Abrasive or caustic agents
- Washer fluids and other cleaning agents in higher concentrations than suggested by the manufacturer
- Solvents, alcohols, fuels, or other harsh cleaners
- Ice scrapers or other hard items

- Aftermarket appearance caps or covers while the lamps are illuminated, due to excessive heat generated

Caution

Failure to clean lamps properly can cause damage to the lamp cover that would not be covered by the vehicle warranty.

Caution

Using wax on low gloss black finish stripes can increase the gloss level and create a non-uniform finish. Clean low gloss stripes with soap and water only.

Air Intakes

Clear debris from the air intakes, between the hood and windshield, when washing the vehicle.

Windshield and Wiper Blades

Clean the outside of the windshield with glass cleaner.

Clean rubber blades using a lint-free cloth or paper towel soaked with windshield washer fluid or a mild detergent. Wash the windshield thoroughly when cleaning the blades. Bugs, road grime, sap, and a buildup of vehicle wash/wax treatments may cause wiper streaking.

Replace the wiper blades if they are worn or damaged. Damage can be caused by extreme dusty conditions, sand, salt, heat, sun, snow, and ice.

Weatherstrips

Apply weatherstrip lubricant on weatherstrips to make them last longer, seal better, and not stick or squeak. Lubricate weatherstrips once a year. Hot, dry climates may require more frequent application. Black marks from rubber material on painted surfaces can be removed by rubbing with a clean cloth. See *Recommended Fluids and Lubricants* ⇨ *391*.

Tires

Use a stiff brush with tire cleaner to clean the tires.

Caution

Using petroleum-based tire dressing products on the vehicle may damage the paint finish and/or tires. When applying a tire dressing, always wipe off any overspray from all painted surfaces on the vehicle.

Wheels and Wheel Trim

Use a soft, clean cloth with mild soap and water to clean the wheels. After rinsing thoroughly with clean water, dry with a soft, clean towel. A wax may then be applied.

Caution

Chrome wheels and chrome wheel trim may be damaged if the vehicle is not washed after driving on roads that have been sprayed with magnesium chloride or calcium chloride. These are used on roads for conditions such as dust and ice. Always wash the chrome with soap and water after exposure.

Caution

To avoid surface damage on wheels and wheel trim, do not use strong soaps, chemicals, abrasive polishes, cleaners, or brushes. Use only GM approved cleaners. Do not drive the vehicle through an automatic car wash that uses silicone carbide tire/wheel cleaning

(Continued)

Caution (Continued)

brushes. Damage could occur and the repairs would not be covered by the vehicle warranty.

Brake System

Visually inspect brake lines and hoses for proper hook-up, binding, leaks, cracks, chafing, etc. Inspect disc brake pads for wear and rotors for surface condition. Inspect drum brake linings/shoes for wear or cracks. Inspect all other brake parts.

Steering, Suspension, and Chassis Components

Visually inspect steering, suspension, and chassis components for damaged, loose, or missing parts or signs of wear at least once a year.

Inspect power steering for proper attachment, connections, binding, leaks, cracks, chafing, etc.

Caution

Lubrication of applicable steering/suspension points should not be done unless the temperature is −12 °C (10 °F) or higher, or damage could result.

Body Component Lubrication

Lubricate all key lock cylinders, and the steel fuel door hinge unless the components are plastic. Applying silicone grease on weatherstrips with a clean cloth will make them last longer, seal better, and not stick or squeak.

Underbody Maintenance

At least twice a year, spring and fall, use plain water to flush any corrosive materials from the underbody. Take care to thoroughly clean any areas where mud and other debris can collect. If equipped with power assist steps, extend them and then use a high pressure wash to clean all joints and gaps.

Do not directly power wash the transfer case and/or front/rear axle output seals. High pressure water can overcome the seals and contaminate the fluid. Contaminated fluid will decrease the life of the transfer case and/or axles and should be replaced.

Sheet Metal Damage

If the vehicle is damaged and requires sheet metal repair or replacement, make sure the body repair shop applies anti-corrosion material to parts repaired or replaced to restore corrosion protection.

Original manufacturer replacement parts will provide the corrosion protection while maintaining the vehicle warranty.

Finish Damage

Quickly repair minor chips and scratches with touch-up materials available from your dealer to avoid corrosion. Larger areas of finish damage can be corrected in your dealer's body and paint shop.

Chemical Paint Spotting

Airborne pollutants can fall upon and attack painted vehicle surfaces causing blotchy, ring-shaped discolorations, and small, irregular dark spots etched into the paint surface. Refer to “Finish Care” previously in this section.

Interior Care

To prevent dirt particle abrasions, regularly clean the vehicle's interior. Immediately remove any soils. Newspapers or dark garments can transfer color to the vehicle’s interior.

Use a soft bristle brush to remove dust from knobs and crevices on the instrument cluster. Using a mild soap solution, immediately remove hand lotions, sunscreen, and insect repellent from all interior surfaces or permanent damage may result.

Use cleaners specifically designed for the surfaces being cleaned to prevent permanent damage. Apply cleaners directly to the cleaning cloth. Do not spray cleaners on any switches or controls. Remove cleaners quickly.

Before using cleaners, read and follow all safety instructions on the label. While cleaning the interior, open the doors and windows to get proper ventilation.

To prevent damage, do not clean the interior using the following cleaners or techniques:

- Never use a razor or any other sharp object to remove soil from any interior surface.
- Never use a brush with stiff bristles.
- Never rub any surface aggressively or with too much pressure.
- Do not use laundry detergents or dishwashing soaps with degreasers. For liquid cleaners, use approximately 20 drops per 3.8 L (1 gal) of water.
  A concentrated soap solution will

create streaks and attract dirt. Do not use solutions that contain strong or caustic soap.

- Do not heavily saturate the upholstery when cleaning.
- Do not use solvents or cleaners containing solvents.

Interior Glass

To clean, use a terry cloth fabric dampened with water. Wipe droplets left behind with a clean dry cloth. If necessary, use a commercial glass cleaner after cleaning with plain water.

Caution
To prevent scratching, never use abrasive cleaners on automotive glass. Abrasive cleaners or aggressive cleaning may damage the rear window defogger.

Cleaning the windshield with water during the first three to six months of ownership will reduce tendency to fog.

Speaker Covers

Vacuum around a speaker cover gently, so that the speaker will not be damaged. Clean spots with water and mild soap.

Coated Moldings

Coated moldings should be cleaned.

- When lightly soiled, wipe with a sponge or soft, lint-free cloth dampened with water.
- When heavily soiled, use warm soapy water.

Fabric/Carpet/Suede

Start by vacuuming the surface using a soft brush attachment. If a rotating vacuum brush attachment is being used, only use it on the floor carpet. Before cleaning, gently remove as much of the soil as possible:

- Gently blot liquids with a paper towel. Continue blotting until no more soil can be removed.
- For solid soils, remove as much as possible prior to vacuuming.

To clean:

1. Saturate a clean, lint-free colorfast cloth with water. Microfiber cloth is recommended to prevent lint transfer to the fabric or carpet.
2. Remove excess moisture by gently wringing until water does not drip from the cleaning cloth.
3. Start on the outside edge of the soil and gently rub toward the center. Fold the cleaning cloth to a clean area frequently to prevent forcing the soil in to the fabric.
4. Continue gently rubbing the soiled area until there is no longer any color transfer from the soil to the cleaning cloth.
5. If the soil is not completely removed, use a mild soap solution followed only by plain water.

If the soil is not completely removed, it may be necessary to use a commercial upholstery cleaner or spot lifter. Test a small

hidden area for colorfastness before using a commercial upholstery cleaner or spot lifter. If ring formation occurs, clean the entire fabric or carpet.

After cleaning use a paper towel to blot excess moisture.

Cleaning High Gloss Surfaces and Vehicle Information and Radio Displays

Use a microfiber cloth on high gloss surfaces or vehicle displays. First, use a soft bristle brush to remove dirt that can scratch the surface. Then gently clean by rubbing with a microfiber cloth. Never use window cleaners or solvents. Periodically hand wash the microfiber cloth separately, using mild soap. Do not use bleach or fabric softener. Rinse thoroughly and air dry before next use.

Caution

Do not attach a device with a suction cup to the display. This may cause damage and would not be covered by the vehicle warranty.

Instrument Panel, Leather, Vinyl, Other Plastic Surfaces, Low Gloss Paint Surfaces and Natural Open Pore Wood Surfaces

Use a soft microfiber cloth dampened with water to remove dust and loose dirt. For a more thorough cleaning, use a soft microfiber cloth dampened with a mild soap solution.

Caution

Soaking or saturating leather, especially perforated leather, as well as other interior surfaces, may cause permanent damage.

(Continued)

Caution (Continued)

Wipe excess moisture from these surfaces after cleaning and allow them to dry naturally. Never use heat, steam, or spot removers. Do not use cleaners that contain silicone or wax-based products. Cleaners containing these solvents can permanently change the appearance and feel of leather or soft trim, and are not recommended.

Do not use cleaners that increase gloss, especially on the instrument panel. Reflected glare can decrease visibility through the windshield under certain conditions.

Caution

Use of air fresheners may cause permanent damage to plastics and painted surfaces. If an air freshener comes in contact with

(Continued)

Caution (Continued)

any plastic or painted surface in the vehicle, blot immediately and clean with a soft cloth dampened with a mild soap solution. Damage caused by air fresheners would not be covered by the vehicle warranty.

Care of Seat Belts

Keep belts clean and dry.

⚠ Warning

Do not bleach or dye seat belt webbing. It may severely weaken the webbing. In a crash, they might not be able to provide adequate protection. Clean and rinse seat belt webbing only with mild soap and lukewarm water. Allow the webbing to dry.

Service and Maintenance

General Information
General Information 352

Maintenance Schedule
Maintenance Schedule 354

Special Application Services
Special Application Services 360

Owner Checks and Services
Owner Checks and Services (Inspection Guide) 361

Additional Maintenance and Care
Additional Maintenance and Care (Lubrication) 372
Additional Maintenance and Care (Maintenance Instructions) 376

Recommended Fluids, Lubricants, and Parts
Recommended Fluids and Lubricants 391
Maintenance Replacement Parts 398

Maintenance Records
Maintenance Records 399

General Information

Your vehicle is an important investment. This section describes the required maintenance for the vehicle. Follow this schedule to help protect against major repair expenses resulting from neglect or inadequate maintenance. It may also help to maintain the value of the vehicle if it is sold. It is the responsibility of the owner to have all required maintenance performed.

Your dealer has trained technicians who can perform required maintenance using genuine replacement parts. They have up-to-date tools and equipment for fast and accurate diagnostics. Many dealers have extended evening and Saturday hours, courtesy transportation, and online scheduling to assist with service needs.

Your dealer recognizes the importance of providing competitively priced maintenance and repair services. With trained technicians, your dealer is the place

for routine maintenance such as oil changes and tire rotations and additional maintenance items like tires, brakes, batteries, and wiper blades.

Caution

Damage caused by improper maintenance can lead to costly repairs and may not be covered by the vehicle warranty. Maintenance intervals, checks, inspections, recommended fluids, and lubricants are important to keep the vehicle in good working condition.

Do not have chemical flushes that are not approved by GM performed on the vehicle. The use of flushes, solvents, cleaners, or lubricants that are not approved by GM could damage the vehicle, requiring expensive repairs that are not covered by the vehicle warranty.

The Tire Rotation and Required Services are the responsibility of the vehicle owner. It is recommended to have your dealer perform these services every 12 000 km/7,500 mi. Proper vehicle maintenance helps to keep the vehicle in good working condition, improves fuel economy, and reduces vehicle emissions.

Because of the way people use vehicles, maintenance needs vary. There may need to be more frequent checks and services. The Additional Required Services - Normal are for vehicles that:

- Carry passengers and cargo within recommended limits on the Tire and Loading Information label. See *Vehicle Load Limits* ⇨ *203*.
- Are driven on reasonable road surfaces within legal driving limits.
- Use the recommended fuel. See *Fuel for Diesel Engines* ⇨ *238*.

Refer to the information in the Maintenance Schedule Additional Required Services - Normal chart.

The Additional Required Services - Severe are for vehicles that are:

- Mainly driven in heavy city traffic in hot weather.
- Mainly driven in hilly or mountainous terrain.
- Driven in deep water, mud, or in unusually dusty conditions.
- Frequently driving loaded near or at capacity.

Refer to the information in the Maintenance Schedule Additional Required Services - Severe chart.

⚠ Warning

Performing maintenance work can be dangerous and can cause serious injury. Perform maintenance work only if the required information, proper tools, and equipment are available.
If they are not, see your dealer to have a trained technician do the work. See *Doing Your Own Service Work* ⇨ *287*.

Maintenance Schedule

Owner Checks and Services

At Each Fuel Stop

- Check the engine oil level. See *Engine Oil* ⇨ *291*.

Once a Month

- Check the tire inflation pressures. See *Tire Pressure* ⇨ *326*.
- Inspect the tires for wear. See *Tire Inspection* ⇨ *327*.
- Check the windshield washer fluid level. See *Washer Fluid* ⇨ *304*.

Engine Oil Change

When the CHANGE ENGINE OIL SOON message displays, have the engine oil and filter changed within the next 1 000 km/600 mi. If driven under the best conditions, the engine oil life system may not indicate the need for vehicle service for up to a year. The engine oil and filter must be changed at least once a year and the oil life system must be reset. Your trained dealer technician can perform this work. If the engine oil life system is reset accidentally, service the vehicle within 5 000 km/3,000 mi since the last service. Reset the oil life system when the oil is changed. See *Engine Oil Life System* ⇨ *294*.

Passenger Compartment Air Filter

The passenger compartment air filter removes dust, pollen, and other airborne irritants from outside air that is pulled into the vehicle. The filter should be replaced as part of routine scheduled maintenance. Inspect the passenger compartment air filter every 36 000 km/22,500 mi or two years, whichever comes first. Replace if necessary. More frequent replacement may be needed if the vehicle is driven in areas with heavy traffic, areas with poor air quality, or areas with high dust levels. Replacement may also be needed if there is a reduction in airflow, excessive window fogging, or odors.

Power Take Off (PTO) and Extended Idle Use

When the vehicle is used with the PTO equipment or used in a way that requires extended idle time, one hour of use shall be deemed the same as 53 km (33 mi). See “Hourmeter” under *Driver Information Center (DIC) (Base Level)* ⇨ *117* or *Driver Information Center (DIC) (Uplevel)* ⇨ *119*.

Air Conditioning Desiccant (Replace Every Seven Years)

The air conditioning system requires maintenance every seven years. This service requires replacement of the desiccant to help the longevity and efficient operation of the air conditioning system. This service can be complex. See your dealer.

Tire Rotation and Required Services Every 12 000 km/ 7,500 mi

Rotate the tires, if recommended for the vehicle, and perform the following services. See *Tire Rotation* ⇨ *328*.

- Check engine oil level and oil life percentage. If needed, change engine oil and filter, and reset oil life system. See *Engine Oil* ⇨ *291* and *Engine Oil Life System* ⇨ *294*.
- Check engine coolant level. See *Cooling System* ⇨ *297*.
- Check windshield washer fluid level. See *Washer Fluid* ⇨ *304*.
- Check tire inflation pressures. See *Tire Pressure* ⇨ *326*.
- Inspect tire wear. See *Tire Inspection* ⇨ *327*.
- Visually check for fluid leaks.
- Inspect engine air cleaner filter. See *Engine Air Cleaner/Filter* ⇨ *295*.
- Inspect brake system. See *Exterior Care* ⇨ *343*.
- Visually inspect steering, suspension, and chassis components for damage, including cracks or tears in the rubber boots, loose or missing parts, or signs of wear at least once a year. See *Exterior Care* ⇨ *343*. Lubricate the suspension and steering components at least every other oil change. (If equipped with grease fittings)
- Inspect power steering for proper attachment, connections, binding, leaks, cracks, chafing, etc.
- Visually inspect halfshafts and drive shafts for excessive wear, lubricant leaks, and/or damage including: tube dents or cracks, constant velocity joint or universal joint looseness, cracked or missing boots, loose or missing boot clamps, center bearing excessive looseness, loose or missing fasteners, and axle seal leaks.
- Check restraint system components. See *Safety System Check* ⇨ *59*.
- Visually inspect fuel system for damage or leaks.
- Visually inspect exhaust system and nearby heat shields for loose or damaged parts.
- Lubricate body components. See *Exterior Care* ⇨ *343*.
- Check accelerator pedal for damage, high effort, or binding. Replace if needed.
- Check front axle wheel bearing oil level.
- Check air compressor air tank for leaks (if equipped).
- Check air compressor discharge line for blockage (if equipped).
- Check air dryer heater and purge valve (if equipped).
- Lubricate front axle tie rod ends and drag link ends (severe service applications).
- Lubricate front axle king pins and busings (severe service applications). See *Front Axle* ⇨ *310*.
- Check rear axle lubricant level (severe service applications).
- Lubricate steering intermediate shaft slip joint and steering gear dust seal.

- Check operation of service brakes (severe service applications).
- Check operation of parking brake (severe service applications).

Additional Required Services Every 24 000 km/15,000 mi

- Check front axle wheel bearing end play.
- Lubricate standard U-joints and slip joint on drive shaft (identified by non-booted slip joint) or every three months, whichever comes first.
- Lubricate the suspension and steering components at least every other oil change or every 12 months, whichever comes first. (If equipped with grease fittings).
- Visually inspect accessory drive belts every 24 000 km (15,000 mi) or every ten years, whichever comes first. Inspect for fraying, excessive cracking, or damage; replace if needed.
- Check generator, starter, and battery for proper function.
- Check power steering fluid level.

Vehicles that operate under normal service conditions require the following every 24 000 km/ 15,000 mi:

- Lubricate front axle tie rod ends and drag link ends.
- Lubricate front axle king pins and busings. See *Front Axle* ⇨ *310*.
- Check rear axle lubricant level.
- Lubricate steering intermediate shaft slip joint and steering gear dust seal.
- Check operation of service brakes.
- Check operation of parking brake.

Additional Required Services

Maintenance Schedule Additional Required Services - Normal	12 000 km/7,500 mi	24 000 km/15,000 mi	36 000 km/22,500 mi	48 000 km/30,000 mi	60 000 km/37,500 mi	72 000 km/45,000 mi	84 000 km/52,500 mi	96 000 km/60,000 mi	108 000 km/67,500 mi	120 000 km/75,000 mi	132 000 km/82,500 mi	144 000 km/90,000 mi	156 000 km/97,500 mi	168 000 km/105,000 mi	180 000 km/112,500 mi	192 000 km/120,000 mi	204 000 km/127,500 mi	216 000 km/135,000 mi	228 000 km/142,500 mi	240 000 km/150,000 mi
Rotate tires and perform Required Services. Check engine oil level and oil life percentage. Change engine oil and filter, if needed.	✓	✓	✓	✓	✓	✓	✓	✓	✓	✓	✓	✓	✓	✓	✓	✓	✓	✓	✓	✓
Replace passenger compartment air filter. (1)			✓			✓			✓			✓			✓			✓		
Replace engine air cleaner filter. (2)						✓						✓						✓		
Change transfer case fluid, if equipped with 4WD. (3)						✓						✓						✓		
Drain and fill engine cooling system. (4)																				✓
Replace brake fluid. (5)													✓							
Replace fuel filter. (6)			✓			✓			✓			✓			✓			✓		
Re-torque front and rear axle U-bolt nuts. (7)					✓					✓					✓					✓
Change 4x2 front axle wheel bearing oil (including synthetic). (8)													✓							
Change 4x4 front axle wheel bearing grease (including synthetic). (8)													✓							
Change rear axle oil (vocational applications). (8)								✓								✓				
Inspect rear axle wheel ends for leaks, lube level/ condition, and check end play with dial indicator. (8)												✓								
Change power steering fluid and filter.												✓								
Replace windshield wiper blades. (9)		✓		✓		✓		✓		✓		✓		✓		✓		✓		✓
Change front axle oil								✓								✓				
Replace hood and/or body lift support gas struts.										✓										✓

Footnotes — Maintenance Schedule Additional Required Services - Normal

(1) Or every two years, whichever comes first. More frequent replacement may be needed if the vehicle is driven in areas with heavy traffic, poor air quality, areas with high dust levels or are sensitive to environmental allergens. Filter replacement may also be needed if you notice reduced airflow, windows fogging up, or odors. Your local GM Service location can help you determine when it is the right time to replace your filter.

(2) Or every four years, whichever comes first. If driving in dusty conditions, inspect the filter at each oil change or more often as needed.

(3) Do not directly power wash the transfer case and/or front/rear axle output seals. High pressure water can overcome the seals and contaminate the fluid. Contaminated fluid will decrease the life of the transfer case and/or drive axles and should be replaced.

(4) Or every five years, whichever comes first. See *Cooling System* ⇨ *297*.

(5) Replace brake fluid every two years. See *Brake Fluid* ⇨ *307*.

(6) Or every two years, or when the CHANGE FUEL FILTER message in the Driver Information Center (DIC) comes on, whichever comes first. The fuel filter may need to be replaced more often based on biodiesel usage, driving in climates with severe dust, off-road driving, or towing a trailer for extended periods.

(7) U-bolts nuts should be re-torqued after the first 1 600 km (1,000 mi) and then approximately every 58 000 km (36,000 mi) thereafter.

(8) Or every 12 months, whichever comes first.

(9) Or every 12 months, whichever comes first. See *Wiper Blade Replacement* ⇨ *312*.

Maintenance Schedule Additional Required Services - Severe	12 000 km/7,500 mi	24 000 km/15,000 mi	36 000 km/22,500 mi	48 000 km/30,000 mi	60 000 km/37,500 mi	72 000 km/45,000 mi	84 000 km/52,500 mi	96 000 km/60,000 mi	108 000 km/67,500 mi	120 000 km/75,000 mi	132 000 km/82,500 mi	144 000 km/90,000 mi	156 000 km/97,500 mi	168 000 km/105,000 mi	180 000 km/112,500 mi	192 000 km/120,000 mi	204 000 km/127,500 mi	216 000 km/135,000 mi	228 000 km/142,500 mi	240 000 km/150,000 mi
Rotate tires and perform Required Services. Check engine oil level and oil life percentage. Change engine oil and filter, if needed.	✓	✓	✓	✓	✓	✓	✓	✓	✓	✓	✓	✓	✓	✓	✓	✓	✓	✓	✓	✓
Replace passenger compartment air filter. (1)			✓			✓			✓			✓			✓			✓		
Replace engine air cleaner filter. (2)						✓						✓						✓		
Change automatic transmission fluid and filter.						✓						✓						✓		
Change transfer case fluid, if equipped with 4WD. (3)			✓			✓			✓			✓			✓			✓		
Drain and fill engine cooling system. (4)																				✓
Replace brake fluid. (5)													✓							
Replace fuel filter. (6)			✓			✓			✓			✓			✓			✓		
Re-torque front and rear axle U-bolt nuts. (7)					✓					✓					✓					✓
Change 4x2 front axle wheel bearing oil (including synthetic). (8)													✓							
Change 4x4 front axle wheel bearing grease (including synthetic). (8)													✓							
Change rear axle oil (vocational applications). (8)								✓								✓				
Inspect rear axle wheel ends for leaks, lube level/ condition, and check end play with dial indicator. (8)												✓								
Change power steering fluid and filter.												✓								
Replace windshield wiper blades. (9)		✓		✓		✓		✓		✓		✓		✓		✓		✓		✓
Replace hood and/or body lift support gas struts.										✓										✓

Footnotes — Maintenance Schedule Additional Required Services - Severe

(1) Or every two years, whichever comes first. More frequent replacement may be needed if the vehicle is driven in areas with heavy traffic, poor air quality, areas with high dust levels or are sensitive to environmental allergens. Filter replacement may also be needed if you notice reduced airflow, windows fogging up, or odors. Your local GM Service location can help you determine when it is the right time to replace your filter.

(2) Or every four years, whichever comes first. If driving in dusty conditions, inspect the filter at each oil change or more often as needed.

(3) Do not directly power wash the transfer case and/or front/rear axle output seals. High pressure water can overcome the seals and contaminate the fluid. Contaminated fluid will decrease the life of the transfer case and/or drive axles and should be replaced.

(4) Or every five years, whichever comes first. See *Cooling System* ⇨ *297*.

(5) Replace brake fluid every two years. See *Brake Fluid* ⇨ *307*.

(6) Or every two years, or when the CHANGE FUEL FILTER message in the Driver Information Center (DIC) comes on, whichever comes first. The fuel filter may need to be replaced more often based on biodiesel usage, driving in climates with severe dust, off-road driving, or towing a trailer for extended periods.

(7) U-bolts nuts should be re-torqued after the first 1 600 km (1,000 mi) and then approximately every 58 000 km (36,000 mi) thereafter.

(8) Or every 12 months, whichever comes first.

(9) Or every 12 months, whichever comes first. See *Wiper Blade Replacement* ⇨ *312*.

Special Application Services

- Vehicles with Dual Wheels: Check dual wheel nut torque at 160, 1 600, and 10 000 km (100, 1,000, and 6,000 mi) of driving. Repeat this service whenever a tire/wheel is serviced or removed.
- Have underbody flushing service performed. See “Underbody Maintenance” in *Exterior Care* ⇨ *343*.
- At least annually, clean the exterior of the cooling system.
- Transmission fluid and filter may need to be replaced periodically. Refer to the Allison Automatic Transmission Manual for specific service instructions and recommendations, required capacities, and transmission fluids.

Owner Checks and Services

Owner Checks and Services (Inspection Guide)

Introduction

⚠ Warning

To prevent property damage, personal injury, and/or death, when servicing the vehicle, park on a flat level surface, set the parking brake, turn the engine off, and install wheel chocks.

⚠ Warning

To prevent property damage, personal injury, and/or death, have a qualified technician regularly check operation of

(Continued)

Warning (Continued)

transmission neutral start switch. If unit starts in gear, the vehicle may inadvertently move.

To be sure your vehicle is ready to operate, conduct a pre-trip inspection at the beginning of each work period. This section gives the operator suggested guidelines to be used in performing tractor and trailer pre-trip inspections. Safety is the most important and obvious reason for doing a pre-trip inspection. Depending on the optional features of the vehicle being used and any possible aftermarket items installed on the vehicle, these guidelines should be modified to include other necessary inspection points. Follow the steps in this section and check them off to ensure a proper vehicle inspection procedure. The pages in this section may be reproduced locally and used on a regular basis.

If any component or system does not pass this inspection, it must be corrected before operating the vehicle. Take your time going through the pre-trip inspection. Remember that a careful pre-trip inspection saves time by eliminating unscheduled stops to correct a faulty item.

Vehicle Inspection

Preparation

Perform the following tasks prior to conducting the pre-trip inspection.

- Apply the parking brake.
- Turn on the parking lamps and hazard warning flashers.
- Unhook the hood latches and raise the hood. Inspect both hood latches to confirm proper operation.
- Check under the vehicle for oil, fuel, coolant leaks, or other signs of damage.

Exterior Lamps Check

Check the exterior lamps by performing the following steps:

1. Turn the ignition on or to ACC/ACCESSORY.
2. Switch the headlamps to the fully on position and activate the fog lamps. Ensure that the headlamps are in low-beam mode. (Turn off high-beam.)
3. Turn on the cargo lamp.
4. Walk around the vehicle and inspect illumination of lights. Parking lamps, hazard warning flashers, low-beam headlamps, and fog lamps should all be illuminated. The cargo lamp should also be illuminated.
5. Turn on the high-beam headlamps.
6. Verify that the high-beam headlamps are now illuminated and the fog lamps have switched off.

Left Side Cab Area

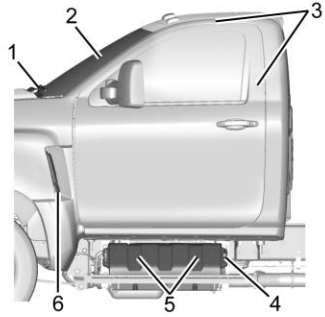

1. Wipers and Cowl Tray: Check the windshield wiper arms for proper spring tension and the wiper blades for damage. Inspect the cowl tray for dirt, debris, snow, or ice that would keep the cowl tray from draining properly. Clean all items from the cowl tray as needed.
2. Windshield: Check for damage to the windshield and clean, if dirty.
3. Cab Structure: Check the body panels such as doors, roof, and fenders for signs of breaks or damage. Check the condition of cab mounting brackets and tilt hood latches.
4. Battery Box: Inspect for damage and secure mounting of the battery box.
5. Batteries and Cables: Unlatch and remove the battery box cover. Check that batteries are secured and the cases are not broken or leaking. Ensure the cables are free from damage. Tops of batteries and terminals must be clean and free from foreign material.
6. Inspect hood latch/hold down.

Left Side Engine Compartment

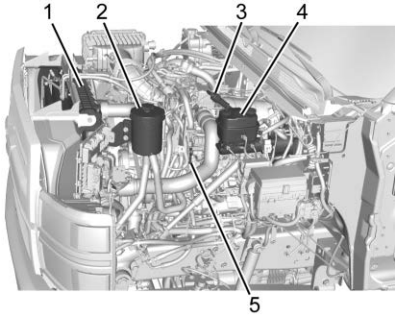

1. Radiator and Charge Air Cooler: Check for loose mounting and damage. Inspect condition of all hoses for damage, cracks, and leaks. Inspect for foreign material on face of cooling package. Carefully brush away collected materials without bending cooling fins to maintain proper airflow through cooling package.
2. Power Steering Fluid: Verify that the fluid level is between the Cold or Hot (as applicable) MIN and MAX marks.
3. Automatic Transmission Fluid: Verify the fluid levels. Refer to the Allison Automatic Transmission Manual.
4. Brake Fluid Level: During normal vehicle operation and servicing, the fluid level will vary between the MIN and MAX lines on the master cylinder mounted front reservoir. Do not fill the master cylinder to the top of the reservoir. Overfilling may lead to overflow. Do not add fluid above the MAX line.
5. Oil Level: Use the dipstick to verify that the oil level is in the proper operating range. See *Engine Oil* ⇨ *291*.

Check the electrical wiring for proper security, damage, and chafing.

Check for signs of fluid puddles under the vehicle or wet components in the engine compartment.

Left Side Front of Vehicle

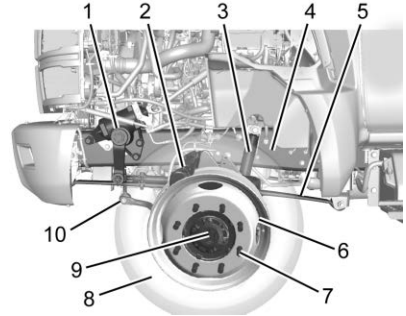

⚠ Warning

To prevent property damage, personal injury, and/or death, if wheels or tires must be changed, obtain expert tire service help. Mounting and demounting of tires should only

(Continued)

Warning (Continued)

be performed by qualified personnel using necessary safety procedures and equipment.

⚠ Warning

To prevent property damage, personal injury, and/or death, do not operate the vehicle if there is a loss of steering or suspension, which could cause loss of vehicle control.

Retread tires are not recommended for use on steering axles of trucks.

1. Steering Gear: Look for missing or loose fasteners, power steering fluid leaks, and damage to the power steering hoses.
2. Brake Caliper and Hose: Check to see that the brake caliper is not cracked or damaged and is securely mounted. Check for broken, loose, or missing parts. Check for cracked, worn, or frayed hoses and for secure couplings.
3. Shock Absorber: Check for cracks, leaks, and missing or broken mounting bolts or bushings.
4. Frame: Check for cracks or bends in the frame. Make sure there are no loose, cracked, bent, broken or missing crossmembers, or crossmember fasteners.
5. Spring Suspension: Check the condition of the spring for cracks, breaks, or shifting. Inspect the spring hanger fasteners, shackles, U-bolts, and nuts for wear, damage, and tightness.
6. Brake Pads and Rotor: With the brakes released, check to see that the brake linings (where visible) are not worn excessively thin, less than 6 mm (0.25 in), or contaminated by lubricant.
7. Wheel and Lug Nuts: Check for damaged or bent wheel. Check to see that all lug nuts are present and not loose. Look for rust trails around nuts. Ensure that no cracks or damage are present at wheel mount holes.
8. Tire: Check the tread depth and tire inflation. Note if the tread is evenly worn. Minimum tread depth is 3 mm (4/32 in) on all tires. Look for cuts or other damage to the tread or sidewalls. Check for missing, broken, or damaged valve cap and stem.
9. Hub: Check for obvious leaks on the outboard or inboard sides of the wheel. Verify that the oil level in the hub is correct.

10. Steering Linkage: Inspect the connecting links, arms, rods, and steering intermediate shaft for worn, damaged, loose, or missing components.

Front of Vehicle

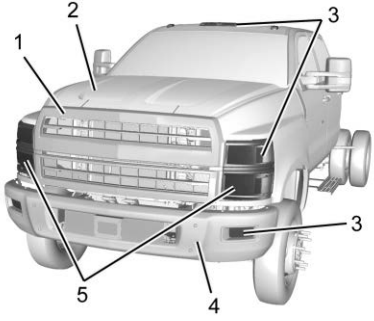

1. Grille: Inspect for damage and security. Check the bug screen for damage and cleanliness.
2. Hood and Fenders: Check the hood panels and fenders for signs of breaks or damage. Ensure the hood opens and closes properly.
3. Lighting System: Lower the hood and inspect the parking, clearance, identification lights, turn signals, fog lamps, and reflectors on the hood, bumper, and cab. They should be clean, operational, and the proper color.
4. Bumper: Inspect for damage and security.
5. Headlamps: Lenses should be clean. If equipped, check the Daytime Running Lamps.

Right Side Front of Vehicle

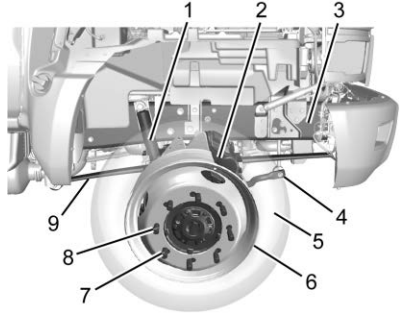

⚠ Warning

To prevent property damage, personal injury, and/or death, if wheels or tires must be changed, obtain expert tire service help. Mounting and demounting of tires should only be performed by qualified personnel using necessary safety procedures and equipment.

⚠ Warning

To prevent property damage, personal injury, and/or death, do not operate the vehicle if there is a loss of steering or suspension, which could cause loss of vehicle control.

Retread tires are not recommended for use on steering axles of trucks.

1. Shock Absorber: Check for cracks, leaks, and missing or broken mounting bolts or bushings.
2. Brake Caliper and Hoses: Check for broken, loose, or missing parts. Check for cracked, worn, or frayed hoses, and for secure couplings.
3. Frame: Check for cracks or bends in the frame. Make sure there are no loose, cracked, bent, broken, or missing crossmembers or crossmember fasteners.
4. Steering Linkage: Inspect the connecting links, arms, and rods for worn, damaged, loose, or missing components.
5. Tire: Check the tread depth and tire inflation. Note if the tread is evenly worn. Minimum tread depth is 3 mm (4/32 in) on all tires. Look for cuts or other damage to the tread or sidewalls. See if the valve caps and stems are missing, broken, or damaged.
6. Brake Pads and Rotor: With the brakes released, check to see that the brake linings (where visible) are not worn excessively thin, less than 6 mm (0.25 in), or contaminated by lubricant. Where visible, check the disc brake caliper wear indicator to see that the brake pads/rotor are not worn excessively.
7. Hub: Check for obvious leaks on the outboard or inboard sides of the wheel. Verify that the oil level in the hub is correct.
8. Wheel and Lug Nuts: Check for damaged or bent wheel. Check to see that all the lug nuts are present and not loose. Look for rust trails around the nuts. Ensure that no cracks or damage are present at the wheel mount holes.
9. Spring Suspension: Check the condition of the spring for cracks, breaks, or shifting. Inspect the spring hanger fasteners, shackles, U-bolts, and nuts for wear, damage, and tightness.

Right Side Engine Compartment

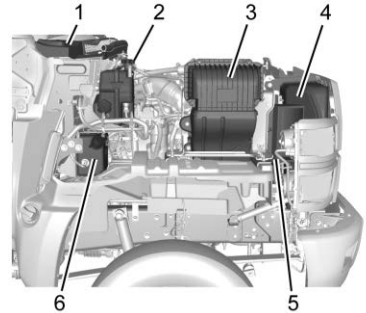

1. Cowl Vent: Ensure the air inlet cover is free of dirt and debris.

⚠ Warning

Steam and scalding liquids from a hot cooling system are under pressure. Turning the pressure cap, even a little, can cause them to come out at high speed and

(Continued)

Warning (Continued)

you could be burned. Never turn the cap when the cooling system, including the pressure cap, is hot. Wait for the cooling system and pressure cap to cool.

2. Coolant Level: Do not remove the pressure cap unless the coolant is cool. Ensure the fluid level, if cold, is within the minimum and maximum fluid level range as marked on the plastic translucent reservoir. If hot, the fluid level must be above the minimum mark, but below the fill neck.
3. Air Cleaner: Check the air cleaner housing and hoses for loose connections or damage. For element replacement, see *Engine Air Cleaner/Filter* ⇨ *295*.
4. Radiator and Charge Air Cooler: Check for loose mounting and damage. Inspect the condition of all the hoses for damage, cracks, and leaks. Inspect for foreign material on the face of the cooling package. Carefully brush away the collected materials without bending the cooling fins to maintain proper airflow through the cooling package.
5. Drive Belts (Out of View): Inspect all belts for frays, cracks, loose fibers, or visible signs of wear. With the engine off, press on all belts to test for proper belt tensioner performance.
6. Windshield Washer Fluid Level: Inspect the reservoir and verify that the fluid level is not empty and has enough fluid to last until the next inspection. If additional fluid is required, see “Lubricant and Sealer Specifications” under *Capacities and Specifications* ⇨ *401*, for the correct fluid type before filling. Do not use water in freezing climates.

Check the electrical wiring for proper security, damage, and chafing.

Check for signs of fluid puddles under the vehicle, or wet components in the engine compartment.

Right Side of Cab

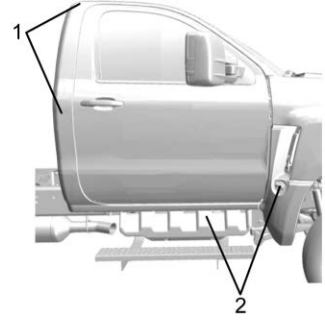

1. Cab Structure: Check the body panels such as doors, fairings, air shield, and cab extenders for signs of breaks or damage. Check the condition of cab mounting brackets and tilt hood latches.
2. Diesel Exhaust Fluid (DEF) Tank: Check to see that the DEF tank and cap are secured

and make sure there are no leaks or damage at the tank, DEF lines, or coolant lines.

Right Side Under Vehicle

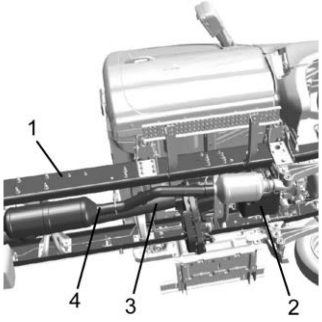

⚠ Warning

To prevent property damage, personal injury, and/or death, maintain adequate clearance between all parts of the exhaust system and all hoses, wires, and lines for engine cooling, brake system, fuel system, power

(Continued)

Warning (Continued)

steering system, and electrical system. Heat damage to hoses, wires, or lines may cause vehicle malfunction.

1. Frame: Check for cracks or bends in the frame. Make sure there are no loose, cracked, bent, broken or missing crossmembers, or crossmember fasteners.
2. Transmission: Inspect for leaks.
3. Drive Shaft: Ensure that all the shaft couplings are secure.
4. Exhaust System: Check to see that all the component parts are securely mounted and no cracks, holes, or severe dents are visible. Evidence of soot build up around the clamps or connections is a clear indicator of a leak being present. Ensure that all the hoses, wires, and air lines are secured away from exhaust components.

Check the electrical wiring for proper security, damage, and chafing.

Additional Under Chassis Inspection for 4x4 Models

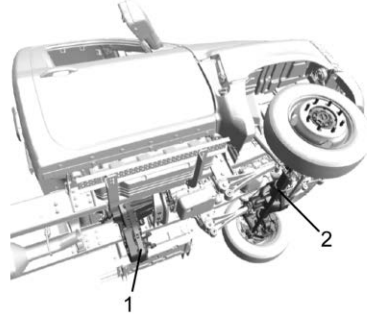

1. Transfer Case: Inspect for fluid levels, leaks, and/or any signs of external damage.
2. Front Drive Axle: Inspect for fluid levels, leaks, and/or any signs of external damage.

Right Side Rear of Vehicle

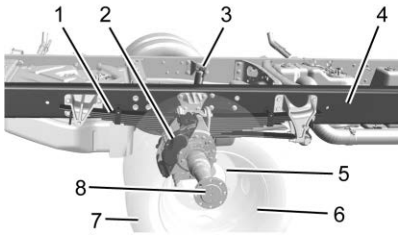

⚠ Warning

To prevent property damage, personal injury, and/or death, if wheels or tires must be changed, obtain expert tire service help. Mounting and demounting of tires should only be performed by qualified personnel using necessary safety procedures and equipment.

1. Spring Suspension: Check condition of the spring for cracks, breaks, or shifting. Inspect the spring hanger fasteners, shackles, U-bolts, and nuts for wear, damage, and tightness.
2. Brake Caliper and Hoses: Check for cracked, worn, or frayed hoses, and for secure couplings. Check for broken, loose, or missing parts.
3. Torque Rods and Shock Absorbers: Check to see that the torque rods are not cracked, broken, or missing. Check the shock absorbers for cracks or leaks. There should be no missing or broken mounting bolts or worn bushings.
4. Frame: Check for cracks or bends in the frame. Make sure there are no loose, cracked, bent, broken, or missing crossmembers or crossmember fasteners.
5. Wheel and Lug Nuts: Check for damaged or bent wheels. Check to see that all the lug nuts are present and not loose. Look for rust trails around nuts. Ensure that no cracks or damage are present at the wheel mount holes.
6. Brake Pads and Rotor: With the brakes released, check to see that the brake linings (where visible) are not worn excessively thin, less than 6 mm (0.25 in), or contaminated by lubricant. Where visible, check the disc brake caliper wear indicator to see that the brake pads/rotor are not worn excessively.
7. Tires: Check the tread depth and tire inflation. Note if the tread is evenly worn. Minimum tread depth is 3 mm (4/32 in) on all tires. Look for cuts or other damage to the tread sidewalls. See if the valve caps and stems are missing, broken, or damaged. Check dual spacing to ensure that the dual

wheels are evenly separated, and that the tires are not touching one another.

8. Hub: Check for obvious leaking on outside or inside of the wheel. Inspect axle flanges and wheel seals for leaks and loose mounting hardware or broken items. Check the lube level, if equipped with sight glass.

Check the electrical wiring for proper security, damage, and chafing.

Rear of Vehicle

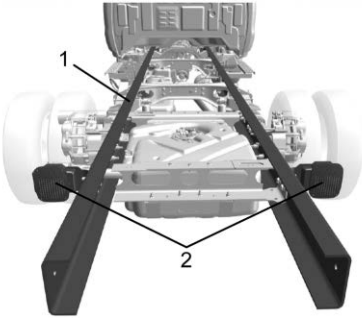

1. Frame: Check for cracks or bends in the frame. Make sure there are no loose, cracked, bent, broken, or missing crossmembers or crossmember fasteners.
2. Taillamps and Reflectors: Check to see that the reflectors and taillamps are clean. Make sure none are missing or broken. Rear taillamps should be clean, unbroken, and red in color.

Check the electrical wiring for proper security, damage, and chafing.

Left Side Rear of Vehicle

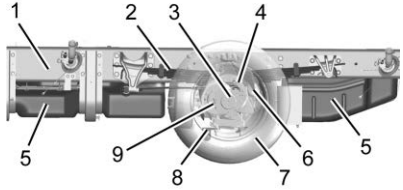

⚠ Warning

To prevent property damage, personal injury, and/or death, if wheels or tires must be changed, obtain expert tire service help. Mounting and demounting of tires should only be performed by qualified personnel using necessary safety procedures and equipment.

1. Frame: Check for cracks or bends in the frame. Make sure there are no loose, cracked, bent, broken, or missing crossmembers or crossmember fasteners.
2. Spring Suspension: Check condition of the spring for cracks, breaks, or shifting. Inspect the spring hanger fasteners, shackles, U-bolts, and nuts for wear, damage, and tightness.
3. Hub: Check for obvious leaking on outside or inside of the wheel. Inspect the axle flanges

and wheel seals for leaks and loose mounting hardware or broken items. Check lube level, if equipped with sight glass.

4. Wheel and Lug Nuts: Check for damaged or bent wheels. Check to see that all the lug nuts are present and not loose. Look for rust trails around nuts. Ensure that no cracks or damage are present at the wheel mount holes.
5. Fuel Tank(s): Check to see that the fuel tank and cap are secured, and make sure there is no damage or leaks at the tank or fuel lines.
6. Brake Caliper and Hoses: Check for cracked, worn, or frayed hoses, and for secure couplings. Check for broken, loose, or missing parts.
7. Tires: Check the tread depth and tire inflation. Note if the tread is evenly worn. Minimum tread depth is 3 mm (4/32 in) on all tires. Look for cuts or other damage to the tread sidewalls. See if the valve caps and stems are missing, broken, or damaged. Check dual spacing to ensure that dual wheels are evenly separated, and that the tires are not touching one another.
8. Torque Rods and Shock Absorbers: Check to see that the torque rods are not cracked, broken, or missing. Check shock absorbers for cracks or leaks. There should be no missing or broken mounting bolts or worn bushings.
9. Brake Pads and Rotor: With brakes released, check to see that the brake linings (where visible) are not worn excessively thin, less than 6 mm (0.25 in), or contaminated by lubricant. Where visible, check the disc brake caliper wear indicator to see that the brake pads/rotor are not worn excessively.

Check electrical wiring for proper security, damage, and chafing.

Cab Interior Inspection

- Safety/Emergency Equipment: Prior to entering the cab, verify that the vehicle is equipped with the proper equipment. Walk around the vehicle and check that all steps and grab handles, inside and out, as well as behind, are tight and clean. Use extreme caution and maintain three points of contact at all times.
- Doors: Check the door latches for positive closing, latching, and locking. Ensure the windows are clean and operate properly and smoothly.
- Accelerator: Press the accelerator pedal and verify that it operates smoothly without any binding or irregular feel. Remove foot from the accelerator and make sure the engine returns to idle immediately.
- Steering Play: Check for smooth operation. Check for excessive looseness in the steering linkages. The steering wheel

should have less than 10 degrees of free play: approximately 5 cm (2 in) at the rim of a 45 cm (18 in) steering wheel.

- Seats: Be sure the seats are firmly engaged to avoid forward or rearward movement when starting or stopping. Make sure that the seats and tether straps are free from damage and secured to the floor.
- Horn(s): Check to see that the horn(s) operate properly.
- Mirrors: Check the mirrors for proper adjustment, damage, cleanliness, and proper mounting. If equipped, check the power mirrors and the heated mirrors for proper operation.
- Windshield and Wipers: Check the windshield for cracks, dirt, illegal stickers, or other viewing obstructions. Ensure the wipers and windshield washer are functioning properly.
- Heater/Defroster: Check to be sure that heater/defroster is working. Verify adequate airflow from the louvers and vents. Operate the temperature and mode controls to verify proper operation.

Additional Maintenance and Care

Additional Maintenance and Care (Lubrication)

Lubrication and Fluids

All new vehicles are lubricated at the factory. Once the vehicle is in operation, regular lubrication and maintenance intervals (based on the type of service and road conditions) must be established and performed. Load weight, vehicle speed, road conditions, and weather conditions all contribute to lubrication frequency. Performing thorough lubrication and maintenance at the specified intervals will ensure an outstanding vehicle life and will reduce overall operating expense.

Only lubricants of superior quality should be used. The use of inferior products will reduce the service life of the vehicle or result in failure of its components.

Components requiring lubrication and fluid check shown in this manual are typical representations.

Caution

Use of the incorrect fluids and lubricants may damage the vehicle and the damages may not be covered by the vehicle warranty. Always use the correct fluids and lubricants. See *Recommended Fluids and Lubricants* ⇨ *391*.

Wipe clean all dirt and debris from grease fittings before applying grease. If the fitting is not cleaned, dirt can be pushed into the component with the grease. Always fill grease to the point where old grease and contaminants are forced out from the part and only new grease comes out. If a fitting does not accept lubrication due to damage or internal stoppage, replace with a new fitting. Remove excess grease from fittings and other surfaces after applying grease.

Components Requiring Lubrication

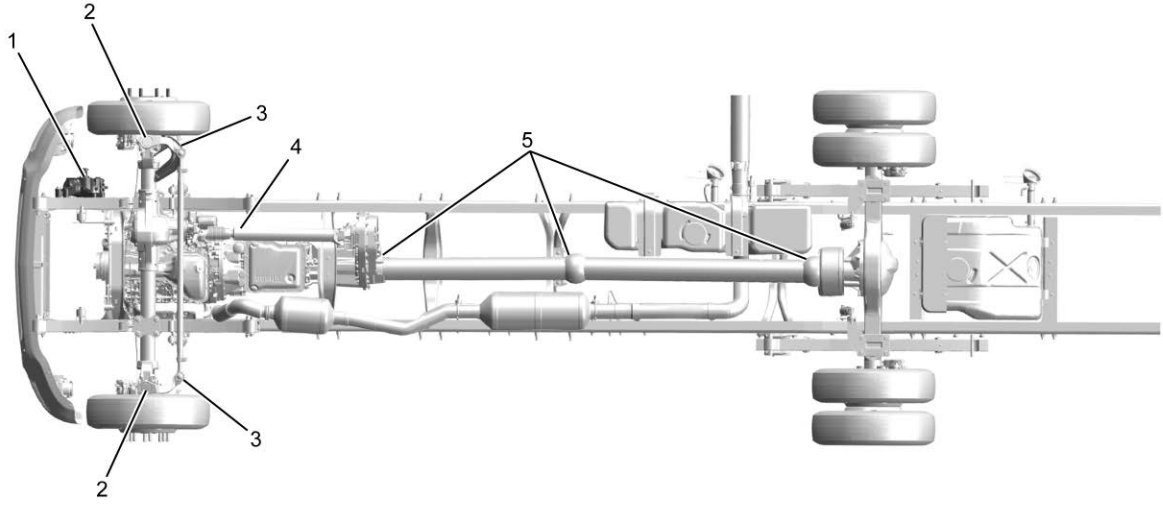

1. Steering gear
2. Kingpin bushings and thrust bearings
3. Tie rod ends
4. Front drive shaft (4x4 models only)
5. Drive shaft U-joints and slip joints

Components Requiring Fluid Check and Fill

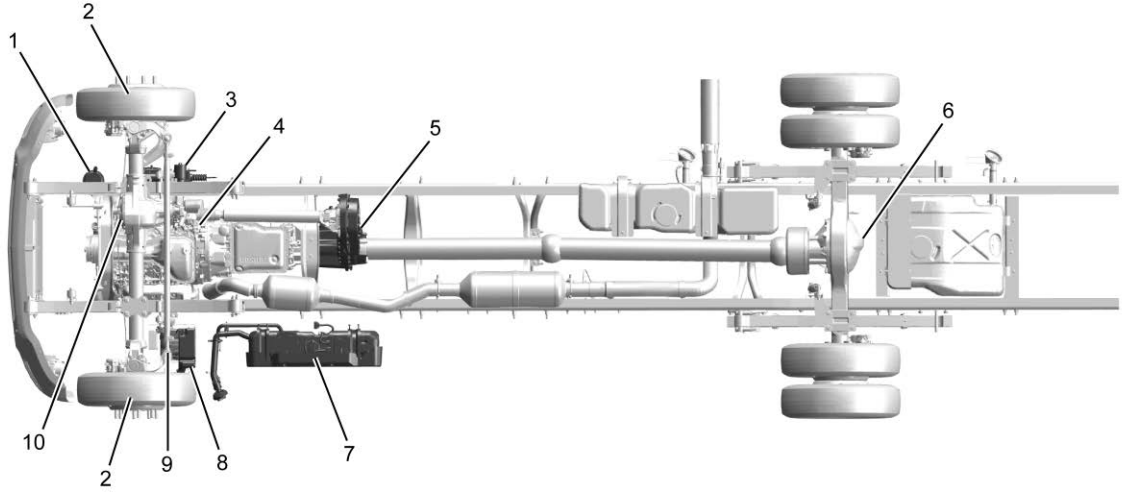

1. Power steering fluid reservoir
2. Front axle oil-filled hub (2)
3. Hydraulic brake fluid reservoir
4. Automatic transmission dipstick / fluid level (out of view)
5. Transfer case (4x4 only)
6. Rear axle oil fill / level check plug
7. Diesel exhaust fluid (DEF) tank
8. Windshield washer fluid bottle
9. Coolant surge tank
10. Engine oil dipstick (out of view)

Additional Maintenance and Care (Maintenance Instructions)

Introduction

⚠ Warning

It can be dangerous to work on your vehicle if you do not have the proper knowledge, service manual, tools, or parts. Always follow owner's manual procedures and consult the service manual for your vehicle before doing any service work.

Your vehicle has been engineered and manufactured to provide economical service. However, it is the owner's responsibility to see that the vehicle receives proper care and maintenance to ensure high performance.

Quality GM service parts are available through your GM dealer. If GM service parts are not used, the owner must make sure that the parts used are equivalent to GM service parts.

As with any vehicle, care should be taken to prevent being injured when performing maintenance or repairs or making any checks. Improper or incomplete service could result in the vehicle not working properly, which in turn, may result in personal injury or damage to the vehicle or its equipment. If you have any questions about performing some service, consult your dealer or have the service done by a skilled technician.

Maintenance Guidelines

⚠ Warning

To prevent property damage, personal injury, and/or death, perform proper and timely maintenance and service to your vehicle.

⚠ Warning

To prevent property damage, personal injury, and/or death, do not make modifications to any part, component, or system of the vehicle, as that can adversely affect the quality and reliability of your vehicle.

⚠ Warning

To prevent property damage, personal injury, and/or death, use only genuine GM service parts. The use of inferior parts can adversely affect the quality and reliability of your vehicle.

⚠ Warning

Performing maintenance work can be dangerous and can cause serious injury. Perform

(Continued)

Warning (Continued)

maintenance work only if the required information, proper tools, and equipment are available.
If they are not, see your dealer to have a trained technician do the work. See *Doing Your Own Service Work* ⇨ *287*.

⚠ Warning

To prevent property damage, personal injury, or death when servicing the vehicle, park on a flat level surface, set the parking brake, turn off the engine, and install wheel chocks.

⚠ Danger

To prevent property damage, personal injury, and/or death, always disconnect the ground

(Continued)

Danger (Continued)

battery terminal first, then the positive cable. When reconnecting the battery cables, connect the positive cables first, and then reconnect the negative cables. Failure to follow this warning may result in a direct battery short, which is a fire or explosion hazard.

⚠ Warning

To prevent damage to electrical components during electric welding operations, follow these cautions: Prior to electric welding, disconnect any negative and positive battery cables that connect the batteries to the vehicle. Be sure the detached connectors are not touching the vehicle. If welding close to an electronic component, temporarily

(Continued)

Warning (Continued)

remove that component. Attach the welder ground cable as close as possible to the part being welded.

When servicing your vehicle always:

- Turn off the ignition, unless the procedure calls for a running engine.
- Set the parking brake and install wheel chocks.
- Use support stands, not a jack, whenever you must be under a raised vehicle.
- Do not smoke.
- Wear safety glasses for eye protection.
- Operate engine only in a well-ventilated area.
- Do not work on brakes or clutch unless proper precautions are taken to prevent inhaling friction material dust.

- Do not wear loose clothing, hanging jewelry, watches, or rings. Tie up long hair and avoid rotating machinery.
- Avoid contact with hot metal parts; allow hot components to cool before working on them.
- Correct any problems that were revealed during inspection prior to operating the vehicle.

Supporting Your Vehicle for Service

⚠ Warning

To prevent property damage, personal injury, and/or death, always use floor stands to support the vehicle before working under it. Using only a jack could allow the vehicle to fall.

When performing service repairs on a vehicle, first:

1. Park the vehicle on a level concrete floor.
2. Set the parking brake and/or block wheels to prevent the vehicle from moving.
3. Select a jack with a rated capacity sufficient to lift the vehicle.
4. Raise the vehicle with the jack applied to the axle. Do not use the bumper as a lifting point.
5. Support the vehicle with floor stands under the axle(s).

If axle or suspension components are to be serviced, support the vehicle with floor stands under frame side members, preferably between the axles.

Chassis Lubrication

New vehicles are lubricated at the factory. After the vehicle is placed in operation, regular lubrication and maintenance intervals, based on the type of service and road conditions, should be established. The loads carried, speed, road and weather conditions all contribute to the frequency of lubrication intervals. Thorough lubrication and maintenance at the specified intervals will ensure outstanding lifecycle value and will reduce overall operating expense.

In some types of operation, and where operating conditions are extremely severe (such as in deep water, mud, or unusually dusty conditions), the vehicle may require lubrication after every 24 hours of operation.

Only lubricants of superior quality should be used. The use of inferior products will reduce the service life of the vehicle or result in failure of its components. See *Recommended Fluids and Lubricants* ⇨ *391*.

The lubrication intervals specified should be performed at whatever interval occurs first, whether it is kilometers (miles), hours, or months.

See *Maintenance Schedule* ⇨ *354*.

Front Axle

Inspection and Lubrication (4x2 Models)

Check to make sure that the front axle mounting U-bolts, attaching or mounting bolts, and nuts are securely tightened. Loose or misaligned front axles will affect vehicle alignment, front tire wear, and handling.

Re-torque the U-bolt nuts after the first 1 600 km (1,000 mi) and every 58 000 km (36,000 mi) thereafter.

Observe the following when checking the front axle for damaged, binding, or worn parts, and adequate lubrication:

- Kingpin wear inspection requires that no weight is on the tires.
- Kingpin and kingpin bushing lubrication requires that the vehicle weight is off the tires and the front wheels are turned fully to the left or right prior to installing grease distribution.
- Kingpin thrust bushing lubrication requires that the vehicle weight is resting on the tires.
- Power grease guns may be used; however, a hand-pumped grease gun is recommended for optimal grease distribution within each component joint.
- Inspect, lubricate, and adjust the wheel bearings at regular intervals.
  See *Additional Maintenance and Care (Lubrication)* ⇨ *372* or *Additional Maintenance and Care (Maintenance Instructions)* ⇨ *376* and *Maintenance Schedule* ⇨ *354*.

Inspection and Lubrication (4x4 Models)

Proper lubrication and inspections of the front drive components must be followed. Both the front drive axle and the transfer case oil level must be checked periodically, and also inspected for possible oil loss.

The proper lubrication level is to the bottom of the oil fill hole with the vehicle on level ground.

Observe the front axle for damaged, binding, or worn parts, and adequate lubrication.

Make sure the axle mounting U-bolt nuts, attaching or mounting bolts and nuts, are securely tightened. Loose or misaligned rear axles will affect vehicle alignment, front tire wear, and handling.

Re-torque the U-bolt nuts as needed. See *Capacities and Specifications* ⇨ *401*.

Normal Maintenance

During operation, the air and oil inside the hub/wheel cavity expands. It is normal for a mist of oil to be present on the outside of the hubcap around the vent slit or hole. Over time, if not wiped off, this film may collect dust and appear unsightly. If the entire face and end of the hubcap become wet with oil, investigate the cause. Refer to the service manual for repair procedures.

Routinely clean the hubcap to ensure that the lubricant level can be easily observed through the clear window as intended.

In situations where the window is clean on the outside, but discolored on the inside, check the lubricant level by removing the rubber fill/vent plug and insert a finger into the hole.

The specified lubricant level for GM clear window type hubcaps is from the minimum line to 0.8 cm (5/16 in) above the minimum line.

If the lubricant level suddenly drops dramatically below the minimum level, see the service manual for diagnostic procedure.

Alignment

Maintaining front axle alignment is very important to achieving maximum tire life and vehicle control. Inspecting steer axle tires in the first 5 000 km (3,000 mi)-16 000 km (10,000 mi) of service will generally show if tires are wearing normally.

- Rapid outside shoulder wear on both tires indicates too much toe-in.
- Rapid inside shoulder wear on both tires indicates too much toe-out.
- Excessive wear on the inside or outside of one steer tire, but not the other, can indicate a toe-in or toe-out condition coupled with a misaligned front or rear axle.
- Pulling to the right or left can indicate misalignment of the front or rear axle, unequal tire pressures, or a damaged/mismatched tire.

See *Tires* ⇨ *325* for additional related information.

Brakes

General Information

⚠ Warning

To prevent personal injury or death, avoid breathing brake lining fiber dust. Always use a respirator while performing brake maintenance. Follow precautions listed below.

⚠ Warning

To prevent property damage, personal injury, and/or death, always check and maintain brakes in proper condition and adjustment. Out-of-adjustment brakes could cause reduced braking ability.

⚠ Warning

All new GM vehicles use non-asbestos brake linings. However, exposure to excessive amounts of brake material dust may be a potentially serious health hazard. To help protect yourself and others, follow all of the precautions in this Section when servicing the brakes.

Follow these precautions:

- Always wear a respirator approved by National Institute for Occupational Safety and Health (NIOSH) or Mine Safety Appliances (MSA) during all brake service procedures. Wear the respirator from removal of the wheels through assembly.
- Never use compressed air or dry brushing to clean brake parts or assemblies.
- Clean brake parts and assemblies in the open air. During disassembly, carefully place all parts on the floor to prevent getting dust into the air. Use an industrial vacuum cleaner with a HEPA filter system to clean dust from the brake drums, backing plates, and other brake parts. After using the vacuum, remove any remaining dust with a rag soaked in water and wrung until nearly dry.
- Never use compressed air or dry sweeping to clean the work area. Use an industrial vacuum cleaner with a HEPA filter system and rags soaked in water and wrung until nearly dry. Dispose of used rags with care to prevent getting dust into the air. Use an approved respirator when emptying vacuum cleaners and handling used rags.
- Wash your hands before eating, drinking, or smoking. Vacuum your work clothes after use, and then launder them separately, without shaking them, to prevent fiber dust from getting into the air.

Hydraulic Brakes

Brake Inspection and Adjustment

This inspection or adjustment should only be performed by qualified service personnel and must be in accordance with instructions provided in the service manual.

Establish a regular schedule for periodic cleaning, lubrication, and inspection, based on the type of vehicle operation. It is difficult to predetermine an exact maintenance interval (time or mileage) since vehicles are used in a variety of applications and conditions. See *Maintenance Schedule* ⇨ *354* and *Owner Checks and Services (Inspection Guide)* ⇨ *361*.

On a periodic basis of at least once per year, inspect the entire brake system for:

- The proper operation of the service and parking brakes.
- The condition of the discs, calipers, and ABS exciter teeth.
- Hydraulic fluid leaks.

- Hose or pipe damage.
- The condition of the ABS wheel speed sensors and wiring.
- Proper ABS wheel speed sensor-to-exciter teeth gap.

Inspect brake lining at every maintenance interval. During severe service operations or prolonged periods of stop-and-go operation, the brakes may require more frequent inspection. Establish inspection intervals that provide for lining replacement before damage to the disc occurs. Excessive lining wear may allow the metal brake shoe to damage the brake disc.

Brake Lines, Hoses, and Fittings

- Check lines for kinks, dents, corrosion, or ruptures.
- Check hoses for abrasion, kinks, soft spots, ruptures, collapse, cracks, twists, or loose frame supports. When replacing a hose, be sure there is enough clearance to prevent the new hose from rubbing against other components.
- Examine all connections for leaks.
- Repair or replace brake line tubes, hoses, or fittings as required.

Fluid Precautions

The brake system consists of two completely separate hydraulic systems operating with two different and incompatible fluids: power steering fluid and hydraulic brake fluid.

⚠ Warning

The wrong or contaminated brake fluid could result in damage to the brake system. This could result in the loss of braking leading to injury, death, or property damage. Always use the proper GM approved brake fluid.

Caution

If brake fluid is spilled on the vehicle's painted surfaces, the paint finish can be damaged. Immediately wash off any painted surface.

The following should always be observed to avoid fluid contamination. Use only properly identified and specified (or equivalent) fluids, and add fluids only to the following locations:

- Brake fluid to the brake master cylinder.
- Power steering fluid to the power steering fluid pump reservoir.

Brake Fluid Level

During normal vehicle operation and servicing, the fluid level will vary between the bottom of the ring (full) and 2.5 cm (1 in) in the master cylinder mounted front reservoir. Do not fill the master cylinder to the top of the reservoir. Overfilling may lead to overflow. A MIN and MAX

indicator are located on the reservoir. Do not add fluid above the MAX line.

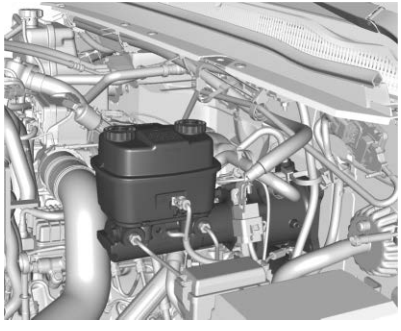

Check and refill the brake fluid reservoir:

1. Clean the reservoir caps before removal to prevent dirt or water from entering the reservoir.
2. Visually inspect the fluid level.
3. If necessary, add brake fluid from a clean unopened container.
4. Use only DOT 3 brake fluid certified to meet manufacturer specifications.
5. Fill the brake fluid reservoir to the MAX line, but do not exceed the MAX fill specifications.

If brake fluid must be added frequently to maintain the proper level in the master cylinder, there is either rapid pad wear or a fluid system leak. A more frequent and thorough brake inspection is required.

Electrical

Batteries

Battery life and performance varies greatly depending on duty cycle. Conditions such as short runs between starts, low ambient operating temperatures, use of battery current without the engine running, and vibration will reduce battery life. Battery life is also affected by the condition of interrelated components, such as alternators, battery cables, connections, engine startability, and starter. To maximize battery life, it is important to keep electrical components, battery boxes, and the engine in top condition and to minimize or eliminate electrical loads when the engine is not running.

Battery life can be extended by keeping the batteries fully charged at all times. Periodically charging the batteries with a battery charger may be able to charge the batteries more completely than the vehicle's alternator in certain severe applications. Use a battery charger (float charger) that automatically reduces amperage or shuts off when the batteries are fully charged. Use of a Midtronics 55-Amp Power Supply/Smart (Battery) Charger, Model Number PCX550, Part Number PSC550CCKIT (or equivalent), available through your GM dealer, is recommended.

Cold batteries resist charging. Battery performance can be improved by regularly or even periodically storing vehicles and charging batteries with an automatic float charger for 8 to 24 hours in a warm garage during the cold winter months.

Caution

To prevent property damage, do not allow batteries to become heavily discharged and exposed to subfreezing weather that will cause them to freeze and become damaged.

Your vehicle utilizes maintenance-free batteries, which will not require the periodic addition of water. Wipe the tops of the batteries clean to prevent a slow current flow through the dirt, resulting in a loss of charge. Be sure the terminals are clamped tightly and that the battery is clamped securely in the battery box.

For best results:

- Do not mix and match battery models/manufacturers in the same battery pack.
- Do not use batteries with differing CCA ratings in the same battery pack.
- Do not use batteries with more than one year difference in the installed age of batteries in the same battery pack.

Battery Cables

Caution

To prevent property damage, when working around the terminals and battery, use extra care to prevent shorting. A good practice is to insulate pliers and screwdrivers. Do not check battery condition by shorting (flashing) across terminals.

Battery cable terminals must be clean and tight. Use a mixture of hot water and common baking soda for removing terminal corrosion and for cleaning the top of the battery. Brighten the contact surfaces with steel wool, apply a light coat of lubricant sealing grease or a spray protectant, and reassemble. Be sure the terminals are clamped tightly.

Electrical Charging and Starting System Test

At every Preventive Maintenance (PM), fully charge the batteries using an automatic float charger. Then, have a qualified technician perform an electrical system test, available through your dealer, to catch electrical system problems before they cause further damage to the batteries and prevent a stranded vehicle. The test will check for alternator amperage output, starter current draw, and battery amperage capacity. This type of testing will detect weaknesses that may not yet be apparent during normal daily operations.

Terminal Inspection-Cleaning-Corrosion Protection

Periodically inspect electrical connectors on the engine, battery, and frame for corrosion and tightness. Inspect exposed cables for fraying or signs of abrasion. Exposed terminals, such as cranking motor, alternator, and feed-through studs should be

cleaned and recoated with a dielectric grease, paste or spray protectant. The inspection/cleaning/corrosion protection should include feed-through connections, power and ground cable connections for batteries, engines, and the starter stud.

Connectors that are more subject to corrosion may be disassembled and sprayed internally with a light coating of dielectric grease. Use grease sparingly, as too much grease will not allow air to escape from the connection, and this compressed air will push out the seals in the electrical connectors.

Accessory Feed Connections

⚠ Danger

Fuses and circuit breakers are marked with their ampere rating. Do not exceed the specified amperage rating when replacing fuses and circuit breakers. Use of an oversized

(Continued)

Danger (Continued)

fuse or circuit breaker can result in a vehicle fire. You and others could be seriously injured or killed.

Vehicle electrical systems are complex and often include electronic components, such as engine and transmission controls, instrument panels, antilock brakes. While most systems still operate on battery voltage (12 volts), some systems can be as high as 90 volts or as low as 5 volts. Refer to the Electrical Circuit Diagram Manuals, available from your GM dealer, to ensure that any body lights and accessories are connected to circuits that are both appropriate and not overloaded. No modification should be made to any vehicle control system without first contacting your GM dealer.

Engine

General Information

For complete operation and maintenance information pertaining to your engine, refer to the Engine Operation and Maintenance Manual provided with the vehicle.

For effective emission control and low operating cost, it is important that maintenance operations be performed at the specified periods or mileage intervals indicated in the Engine Operation and Maintenance Manual.

Service intervals are based on average operating conditions. In certain environments and locations, more frequent servicing will be required.

The required maintenance operations may be performed at a service establishment. Any replacement parts used for required maintenance services or repairs should be genuine OEM service parts. Use of inferior replacement parts hinders engine and emission

control operations; it also can reduce engine life and/or jeopardize the warranty.

Receipts covering the performance of regular maintenance should be retained in the event questions arise concerning maintenance. The receipts should be transferred to each subsequent owner of the engine (vehicle).

For information regarding routine scheduled maintenance such as replacement of oil, filters, coolant, belts, belt tensioners, etc., and inspection and adjustment of items, such as valve lash, etc., refer to the Engine Operation and Maintenance Manual supplied with the vehicle.

Engine Fluids and Contaminated Material

Engine fluids (oil, fuel, and coolant) may be a hazard to human health and the environment. Handle all fluids and other contaminated materials (such as filters, rags) in accordance with applicable regulations. Recycle or dispose of engine fluids, filters, and other contaminated materials according to applicable regulations.

Fuel System

Frequently inspect the condition of the fuel tanks and mounting hardware, fuel tank cap and vent, fuel lines, clips, and routing. At every Preventive Maintenance (PM), or daily if necessary, drain water and sediment from the fuel/water separator filter. Be sure to use the proper fuel/water separator filter element with the correct part number and filter efficiency rating.

Fuel Tank Draining and Cleaning

Periodically (annually is recommended) drain water and sediment from the fuel tank. Drain and flush sediment from the fuel tank at least every 12 months or more frequently if fuel quality or type of fuel dictates.

Since Ultra-Low Sulfur Diesel (ULSD) fuel tends to absorb more water and engines are operating at higher temperatures, microbe growth in the fuel tanks has become more prevalent. Microbe growth results in more contaminants in the fuel and reduces fuel filter life. Since fuel tank draining does not remove all microbes, fuel tank draining alone will not eliminate the problem. If microbe growth is found in the fuel:

1. Drain and clean the fuel tank(s) every 12 months or more often. Clean the tanks with a professional fuel tank cleaning system (available through your dealer) or have your dealer perform the service for you.
2. Treat the vehicle fuel tanks and bulk tanks regularly with a biocide from a reputable vendor.
3. Purchase fuel only from vendors that pretreat their fuel with biocides.
4. Periodically test the fuel supplied by your fuel vendor for the presence of microbes.

Frame

GM Truck chassis are manufactured with frame rails of high strength steel, and each must be handled in a specific manner to ensure maximum service life. Before attempting frame repair or modification, consult the service manual or your dealer.

Noise Emissions - Maintenance, Use, and Repair

Instructions for Proper Maintenance

In order to comply with federal exterior noise regulations, your vehicle may be equipped with noise emission items that must be properly maintained, used, and repaired. Depending upon the vehicle configuration, it may incorporate all or some of the following:

Air Intake System

- **Air Cleaner** – should be inspected and its location should not be altered. Do not alter inlet and outlet piping.

Body

- **Wheel Well** – splash shields, cab shields, and underhood insulation should be inspected for deterioration, dislocation, and orientation and repaired or replaced as necessary.

Cooling System

- Check fan for damage to blades. Replace, if damaged, with manufacturer's recommended parts. Inspect for fan-to-shroud interference and any damage to shroud, such as cracks and holes.
- Fan speed ratio should not be changed and fan spacer dimensions and position should not be altered.
- Inspect for proper operation of fan clutch, making sure that the fan is disengaged when cooling of engine is not required.

Engine Noise Shields/Blankets

- Engine valve covers, oil pans, and block covers are made to damp out engine mechanical noise and, if needed, should be replaced with original equipment parts.

Exhaust System

- Inspect for leaks at various joint connections and tighten clamps. Make visual inspection for cracks or holes in muffler and tailpipe. Always replace with manufacturer's recommended parts. Tailpipe elbow or offset tailpipe orientation must not be changed from standard position as originally received.
- To prevent abnormal changes in vehicle sound level, it is necessary for the owner to perform inspections and necessary maintenance at the intervals shown in the maintenance schedules, and record them on the maintenance record form provided.

Drive Shafts

At the regular lubrication interval, check universal joints, slip joints, slip joint boot, and carrier bearings for any evidence of wear or looseness.

⚠ Warning

If vibrations from the drive shaft are felt, stop the vehicle immediately. Possible injury or damage to the drive shaft or other components could occur, which could cause a crash resulting in injury, death, or property damage.

Suspension

Caution

To prevent property damage, do not adjust air suspension height to any setting other than the specified setting. Altering the height setting will change the

(Continued)

Caution (Continued)

driveline angle and may result in unwarrantable component damage, such as transmission component damage.

If equipped with the optional air suspension for the rear axle, verify air suspension height at engine oil change intervals. See the appropriate service manual.

Suspension alignment must be maintained at all times.

See *Capacities and Specifications* ⇨ *401* for proper U-bolt torque values.

Periodically:

- Check the condition of spring leaves for evidence of fatigue, bending, or breakage.
- Check the condition of suspension mounting brackets and bushings.
- Ensure that suspension mounts (such as brackets, bushings, fasteners) are tight.
- Ensure that torque rod mounting fasteners are tight.
- Check U-bolts as follows:
  - 5.1. After the chassis has been operating under load for 1 600 km (1,000 mi) or six months, whichever comes first, the U-bolt nuts must be torqued again.
  - 5.2. Thereafter, the U-bolt nuts must be torqued every 58 000 km (36,000 mi). Torque interval may be lowered to 40 000 km (25,000 mi) to synchronize with oil change interval.

Front Suspension

The front suspension should be regularly inspected for loose, worn, or broken components. Front suspensions/axles should be checked periodically for proper alignment to promote maximum tire life.

Rear Suspension

The rear suspension should be regularly inspected for loose, worn, or broken components. Rear suspensions/axles should be checked periodically for proper alignment to promote maximum tire life.

On vehicles equipped with the optional air suspension, the air suspension components, including air bags, height control valves, air lines, and fittings should be inspected for wear, damage, and audible air leaks.

Steering

General Information

⚠ Warning

To prevent property damage, personal injury, and/or death, always follow recommended procedures for steering system maintenance. Maintain the

(Continued)

Warning (Continued)

steering system in proper condition; otherwise, reduced steering ability could result.

- Have a technician examine the steering mechanism. Minor adjustments could head off further problems.
- Check tie rod ends, drag link ends, and kingpins. Joints and fasteners must be tight. Articulating joints must be well lubricated.
- Check for installation and spread of cotter pins and tightness of nuts at both ends of the tie rod and drag link.
- Maintain proper power steering fluid levels.
- Check that pitman arm (steering arm at steering gear) mounting is tight and locked. Check system for leaks or hose chafing.
- Regularly inspect steering column joint bolts and steering linkage, particularly for body-to-chassis clearance.

Have any steering problems corrected at once by a qualified service technician.

Tightening Steering Intermediate Shaft Joint Bolts

As a good maintenance practice, it is recommended that steering intermediate shaft joint bolts be checked for tightness every 193 000 km (120,000 mi) or annually, whichever occurs first.

Lubrication Points

The steering shaft is lubricated at three points. For the correct maintenance interval, see *Maintenance Schedule* ⇨ *354*.

Power Steering

Whenever the power steering system has been drained and refilled for any reason, air must be bled from the system before returning the vehicle to service. Failure to properly bleed the

hydraulic system can result in degradation of power system performance.

Consult your GM dealer for filling and bleeding the system.

The power steering fluid filter is located inside the power steering reservoir. To remove the filter, unscrew the large cap on the power steering reservoir and unscrew the filter. Reverse the procedure to install the new filter.

Recommended Fluids, Lubricants, and Parts

Recommended Fluids and Lubricants

Fluids and lubricants identified below by name, part number, or specification can be obtained from your dealer.

Usage	Fluid/Lubricant
Chassis Lubrication, Rear Driveline Center Spline	Chassis Lubricant (GM Part No. 12377985) or lubricant meeting requirements of NLGI #2, Category LB or GC-LB.
Diesel Exhaust Aftertreatment System	Diesel Exhaust Fluid (GM Part No. 19286291) or Diesel Exhaust Fluid that meets ISO 22241-1 or displays the API Diesel Exhaust Fluid Certification Mark.
Engine Coolant	50/50 mixture of clean, drinkable water and use only DEX-COOL coolant. See *Cooling System* ⇨ *297*.
Engine Oil	Engine oils with the letters CJ-4 or CK-4 are required for your vehicle. The CJ-4 or CK-4 designation can appear either alone or in combination with other American Petroleum Institute (API) designations, such as API CJ-4/SL. These letters show API levels of quality. To determine the preferred viscosity for your vehicle's diesel engine, see *Engine Oil* ⇨ *291*.
Front and Rear Axle	SAE 75W-90 Synthetic Axle Lubricant (GM Part No. 88900401).
Front Axle Propshaft Spline	Chassis Lubricant (GM Part No. 12377985) or lubricant meeting requirements of NLGI #2, Category LB or GC-LB.
Hydraulic Brake System	DOT 3 Hydraulic Brake Fluid (GM Part No. 19353126).
Hydraulic Power Steering System	GM Power Steering Fluid (GM Part No. 19329450).

Usage	Fluid/Lubricant
Key Lock Cylinders, Hood Hinges, Body Door Hinge Pins, Hinges, Latch Bolt, and Linkage	Multi-Purpose Lubricant, Superlube (GM Part No. 12346241).
Transfer Case (Four-Wheel Drive)	See your dealer.
Weatherstrip Conditioning	Weatherstrip Lubricant (GM Part No. 3634770, in Canada 10953518) or equivalent.
Weatherstrip Squeaks	Synthetic Grease with Teflon, Superlube (GM Part No. 12371287).
Windshield Washer	Automotive windshield washer fluid that meets regional freeze protection requirements.

Lubricant and Sealer Specifications

Component	Component Vendor/Lubrication Type	Viscosity	Applicable Temperatures
Non-driving Front Axle			
Front Axle Wheel Bearing Oil	Mineral Oil	75W	−40 °C to −26 °C (−40 °F to −15 °F)
		75W-80	−40 °C to 27 °C (−40 °F to 80 °F)
		75W-90	−40 °C to 27 °C (−40 °F to 80 °F)
		75W-140	−40 °C and above (−40 °F and above)
		80W-90	−26 °C to 38 °C (−15 °F to 100 °F)
		80W-140	−26 °C and above (−15 °F and above)
		85W-140	−12 °C and above (10 °F and above)

Component	Component Vendor/Lubrication Type	Viscosity	Applicable Temperatures
Front Axle Wheel Bearing Oil (4x2) (Continued)	Multipurpose EP gear lube of API GL-5 quality meeting MIL-PRF-2105E specs including synthetic lubricants. Do not mix conventional (mineral based) lubricants with synthetic lubricants.	75W	−40 °C to −0 °C (−40 °F to −32 °F)
		75W-90	−40 °C to 38 °C (−40 °F to 100 °F)
		75W-140	−40 °C and above (−40 °F and above)
		80W	−26 °C to 21 °C (−15 °F to 70 °F)
		80W-140	−26 °C and above (−15 °F and above)
		90W	−12 °C to 38 °C (10 °F to 100 °F)
		85W-40	−12 °C and above (10 °F and above)
		140W	4 °C and above (40 °F and above)

Component	Component Vendor/Lubrication Type	Viscosity	Applicable Temperatures
Front Axle Tie Rod Ends, Drag Link, Kingpins, and Bushings	Dana Spicer axle: NLGI #2 Lithium Complex Based Moly grease or equivalent GC/LB NLGI #2 Multi-purpose Lithium Complex grease. Dana Spicer axle: With chassis load on axle, force grease through thrust bearings; then with axle lifted clear of floor, force grease between kingpin and bushing surfaces.	–	–
Front Drive Axle (4x4)			
Front Drive Axle Oil	API, GL5, MIL-PRF-2015E, or SAE J2360	SAE 80W / 90	−25 °C to 38 °C (−13°F to 100°F)
		Synthetic 75W-90	−40 °C to 38 °C (−40 °F to 100 °F)
Steering			
Steering Gear Lubricant	NLGI #2 Lithium Complex Based Moly grease or equivalent GC/LB NLGI #2 Multi-purpose Lithium Complex grease	–	–
Steering Intermediate Shaft U-Joints / Slip Joint Lubricant	NLGI #2 Lithium Complex Based Moly grease or equivalent GC/LB NLGI #2 Multi-purpose Lithium Complex grease	–	–

Component	Component Vendor/Lubrication Type	Viscosity	Applicable Temperatures
Drive Shaft			
U-Joint Lubricant	Lithium Complex Based Moly grease or equivalent GC/LB NLGI #2 Multi-purpose Lithium Complex grease	–	–
Transmission			
Allison-Conventional Automatic Transmission Fluid (ATF) Fill/Change	Refer to the Allison Automatic Transmission Manual.		

Component	Component Vendor/Lubrication Type	Viscosity	Applicable Temperatures
Rear Axle			
Rear Drive Axle(s)	Mineral Oil — Gear oil meeting MIL-PRF-2105E, API MT-1, GL-5	75W	−40 °C to −26 °C (−40 °F to −15 °F)
		75W-80	−40 °C to 27 °C (−40 °F to 80 °F)
		75W-90	−40 °C to 38 °C (−40 °F to 100 °F)
		75W-140	−40 °C and above (−40 °F and above)
		80W-90	−26 °C to 38 °C (−15 °F to 100 °F)
		80W-140	−26 °C and above (−15 °F and above)
		85W-140	−12 °C and above (10 °F and above)
	2837 Synthetic Lubricant. Do not mix conventional (mineral bases) lube with synthetic oil.	75W-90	All Temperatures

Component	Component Vendor/Lubrication Type	Viscosity	Applicable Temperatures
Electrical			
Terminals—Lubricant Sealing Grease	472141-C1	–	–
Connectors—Dielectric Grease	NYOGEL 760 G	–	–

Maintenance Replacement Parts

Replacement parts identified below by name, part number, or specification can be obtained from your dealer.

Part	GM Part Number	ACDelco Part Number
Engine Air Cleaner/Filter	84262965	A3231C
Fuel Filter	23304096	TP1015
Engine Oil Filter	12684038	PF26
Passenger Compartment Air Filter	23281440	CF188
Wiper Blades		
Driver Side – 55 cm (21.7 in)	23417074	–
Passenger Side – 55 cm (21.7 in)	23417074	–
Use only the specified filters.		

Maintenance Records

After the scheduled services are performed, record the date, odometer reading, who performed the service, and the type of services performed in the boxes provided. Retain all maintenance receipts.

Date	Odometer Reading	Serviced By	Services Performed

Technical Data

Vehicle Identification
Vehicle Identification Number (VIN) 400

Vehicle Data
Capacities and Specifications 401
Engine Drive Belt Routing 405

Vehicle Identification

Vehicle Identification Number (VIN)

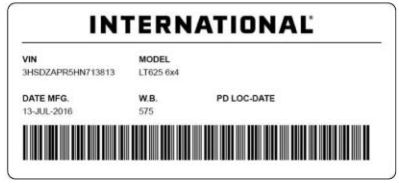

The Vehicle Identification Number (VIN) is on the driver door. The VIN and model description are necessary when ordering replacement parts or service manuals.

Engine Identification

The eighth character in the VIN is the engine code. This code identifies the vehicle's engine, specifications, and replacement parts. See “Engine Specifications” under *Capacities and Specifications* ⇨ *401* for the vehicle's engine code.

Vehicle Data

Capacities and Specifications

The following approximate capacities are given in metric and English conversions. See *Recommended Fluids and Lubricants* ⇨ *391*.

Application	Capacities	
	Metric	English
Cooling System*	45.0 L	12.0 gal
Diesel Exhaust Fluid (DEF) Tank**	26.5 L	7.0 gal
Engine Oil with Filter	9.5 L	10.0 qt
Power Steering Fluid	4.0 L	8.5 pt
Front Drive Axles (4x4 Only)	2.6 L	5.5 pt
Rear Axle Unit Refill Capacities		
Dana Spicer S110	5.9 L	12.5 pt
Dana Spicer S130	5.9 L	12.5 pt
Transfer Case (4x4 Only)	2.84 L	6.0 pt

Application	Capacities	
	Metric	English
*Cooling system refill capacities vary considerably due to differences in engine models and optional equipment, in addition to the amount of coolant remaining in the system after draining. Total capacity is approximately 30 L (8 gal). If the system has been flushed with water or cleaner, a significant amount of the rinse water will remain in the system. In this case, refilling with a mixture with a higher percentage (60–66%) of coolant concentrate is advised in order to achieve a final mixture closer to 50/50. Fill the system and run the vehicle until the thermostat opens. Before adding any fluid, check the coolant concentration and add additional water or concentrated undiluted coolant to adjust the concentration. Run the vehicle and retest for coolant volume level (set to MAX line) and concentration level.		
**Do not overfill the DEF tank. See *Diesel Exhaust Fluid* ⇨ *218*.		
A variety of transmissions are available for your vehicle. Refer to the Allison Automatic Transmission Manual for the most up-to-date specific service instructions, required capacities, and transmission fluids.		
All quantities are approximate. When adding, be sure to fill to the appropriate level, as recommended in this manual. Recheck fluid level after filling.		

Engine Specifications

Engine	VIN Code	Type
6.6L 8-Cylinder Turbo Diesel (L5D Engine)	PV	V8

Torque Specifications

U-Bolt Nut Torque Charts

RPO Code	Rear Suspension Type	Torque	
		N•m	lb-ft
GR4	6 100 kg (13,500 lb) Capacity, RR, Springs, Vari-Rate	353–407	260–300
FU7	7 000 kg (15,500 lb) Capacity, RR, Springs, Vari-Rate	353–407	260–300
GR3	4 900 kg (11,000 lb) Capacity, Variable Rate Spring Suspension	353–407	260-300
G40	5 400 kg (12,000 lb) Capacity, International Ride Optimized Suspension (IROS)	353–407	260–300
GP1	6 100 kg (13,500 lb) Capacity, International Ride Optimized Suspension (IROS)	353–407	260–300
GP8	7 000 kg (15,500 lb) Capacity, International Ride Optimized Suspension (IROS)	353–407	260–300
For all other vendor supplied suspensions, refer to the vendor's website for proper torque specifications.			

RPO Code	Front Suspension Type	Torque	
		N•m	lb-ft
FSN	3 600 kg (8,000 lb) Capacity, Spring Parabolic, Taper Leaf; with Shock Absorbers	235–265	173–195

RPO Code	Front Suspension Type	Torque	
		N•m	lb-ft
FK6	3 100 kg (7,000 lb) Capacity, Spring Parabolic, Taper Leaf; with Shock Absorbers	235–265	173–195
F95	2 700 kg (6,000 lb) Capacity, Spring Taper Leaf, Shackle Type; with Shock Absorbers	235–265	173–195
FTV	3 400 kg (7,500 lb) Capacity, Spring Taper Leaf, Shackle Type; with Shock Absorbers	235–265	173–195

Disc Wheel Nut Torque Chart

Lug Nut Size	Lug Nut Type	Socket Size	Torque	
			N•m	lb-ft
22 mm	2 piece	33 mm	610–678	450–500
Carefully lubricate the wheel stud threads by wiping them with a freshly oiled cloth. Keep lubricant away from the flange nut washer surface and flat on the disc wheel.				

Engine Drive Belt Routing

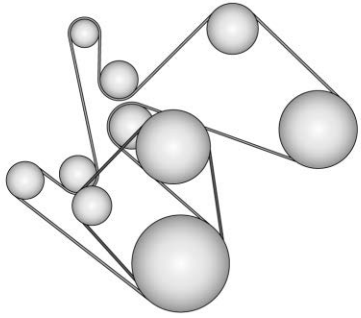

6.6L V8 Engine (Single Generator without Air Compressor)

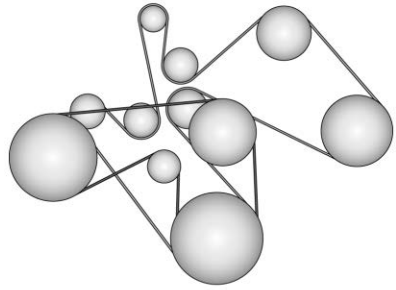

6.6L V8 Engine (Single Generator with Air Compressor)

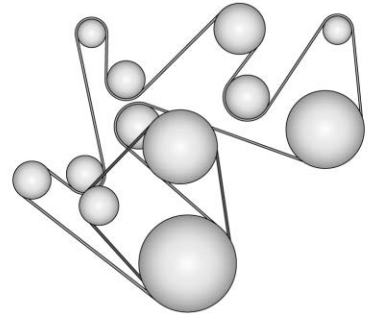

6.6L V8 Engine Engine (Dual Generator without Air Compressor)

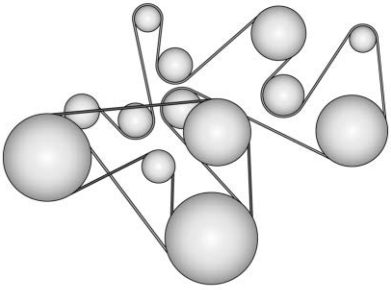

6.6L V8 Engine Engine (Dual Generator with Air Compressor)

Customer Information

Customer Information
Customer Satisfaction Procedure 407
Customer Assistance Offices 409
Customer Assistance for Text Telephone (TTY) Users 410
Online Owner Center 410
GM Mobility Reimbursement Program 411
Roadside Assistance Program 411
Scheduling Service Appointments 413
Courtesy Transportation Program 413
Collision Damage Repair 414
Publication Ordering Information 416
Radio Frequency Statement 417

Reporting Safety Defects
Reporting Safety Defects to the United States Government 417
Reporting Safety Defects to the Canadian Government 418
Reporting Safety Defects to General Motors 418

Vehicle Data Recording and Privacy
Vehicle Data Recording and Privacy 419
Event Data Recorders 419
OnStar 420
Infotainment System 420

Customer Information

Customer Satisfaction Procedure

Your satisfaction and goodwill are important to your dealer and to Chevrolet. Normally, any concerns with the sales transaction or the operation of the vehicle will be resolved by your dealer's sales or service departments. Sometimes, however, despite the best intentions of all concerned, misunderstandings can occur. If your concern has not been resolved to your satisfaction, the following steps should be taken:

STEP ONE : Discuss your concern with a member of dealership management. Normally, concerns can be quickly resolved at that level. If the matter has already been reviewed with the sales, service, or parts manager, contact the owner of your dealership or the general manager.

STEP TWO : If after contacting a member of dealership management, it appears your concern cannot be

resolved by your dealership without further help, in the U.S., call the Chevrolet Customer Assistance Center at 1-800-222-1020. In Canada, call General Motors of Canada Customer Care Centre at 1-800-263-3777 (English), or 1-800-263-7854 (French).

We encourage you to call the toll-free number in order to give your inquiry prompt attention. Have the following information available to give the Customer Assistance representative:

- Vehicle Identification Number (VIN). This is available from the vehicle registration or title, or the plate at the top left of the instrument panel and visible through the windshield.
- Dealership name and location.
- Vehicle delivery date and present mileage.

When contacting Chevrolet, remember that your concern will likely be resolved at a dealer's facility. That is why we suggest following Step One first.

STEP THREE — U.S. Owners : Both General Motors and your dealer are committed to making sure you are completely satisfied with your new vehicle. However, if you continue to remain unsatisfied after following the procedure outlined in Steps One and Two, you can file with the Better Business Bureau (BBB) Auto Line Program to enforce your rights.

The BBB Auto Line Program is an out-of-court program administered by the Council of Better Business Bureaus to settle automotive disputes regarding vehicle repairs or the interpretation of the New Vehicle Limited Warranty. Although you may be required to resort to this informal dispute resolution program prior to filing a court action, use of the program is free of charge and your case will generally be heard within 40 days. If you do not agree with the decision given in your case, you may reject it and proceed with any other venue for relief available to you.

You may contact the BBB Auto Line Program using the toll-free telephone number or write them at the following address:

BBB Auto Line Program
Council of Better Business Bureaus, Inc.
3033 Wilson Boulevard
Suite 600
Arlington, VA 22201

Telephone: 1-800-955-5100
http://www.bbb.org/council/programs-services/dispute-handling-and-resolution/bbb-auto-line

This program is available in all 50 states and the District of Columbia. Eligibility is limited by vehicle age, mileage, and other factors. General Motors reserves the right to change eligibility limitations and/or discontinue its participation in this program.

STEP THREE — Canadian Owners : In the event that you do not feel your concerns have been addressed after following the procedure outlined in Steps One

and Two, General Motors of Canada Company wants you to be aware of its participation in a no-charge Mediation/Arbitration Program. General Motors of Canada Company has committed to binding arbitration of owner disputes involving factory-related vehicle service claims. The program provides for the review of the facts involved by an impartial third party arbiter, and may include an informal hearing before the arbiter. The program is designed so that the entire dispute settlement process, from the time you file your complaint to the final decision, should be completed in about 70 days. We believe our impartial program offers advantages over courts in most jurisdictions because it is informal, quick, and free of charge.

For further information concerning eligibility in the Canadian Motor Vehicle Arbitration Plan (CAMVAP), call toll-free 1-800-207-0685, or call the General Motors Customer Care Centre, 1-800-263-3777 (English), 1-800-263-7854 (French), or write to:

The Mediation/Arbitration Program
c/o Customer Care Centre
General Motors of Canada Company
Mail Code: CA1-163-005
1908 Colonel Sam Drive
Oshawa, Ontario L1H 8P7

Your inquiry should be accompanied by the Vehicle Identification Number (VIN).

Customer Assistance Offices

Chevrolet encourages customers to call the toll-free number for assistance. However, if a customer wishes to write or e-mail Chevrolet, the letter should be addressed to:

United States and Puerto Rico

Chevrolet Motor Division
Chevrolet Customer Assistance Center
P.O. Box 33170
Detroit, MI 48232-5170
www.Chevrolet.com

1-800-222-1020
1-800-833-2438 (For Text Telephone Devices (TTYs))
Roadside Assistance:
1-888-899-1327

From U.S. Virgin Islands:

1-800-496-9994

Canada

General Motors of Canada Company
Customer Care Centre, Mail Code: CA1-163-005
1908 Colonel Sam Drive
Oshawa, Ontario L1H 8P7
www.gm.ca

1-800-263-3777 (English)
1-800-263-7854 (French)
1-800-263-3830 (For Text

Telephone devices (TTYs))
Roadside Assistance:
1-800-268-6800

Overseas

Please contact the local General Motors Business Unit.

Customer Assistance for Text Telephone (TTY) Users

To assist customers who are deaf, hard of hearing, or speech-impaired and who use Text Telephones (TTYs), Chevrolet has TTY equipment available at its Customer Assistance Center. Any TTY user in the U.S. can communicate with Chevrolet by dialing:
1-800-833-2438. TTY users in Canada can dial 1-800-263-3830.

Online Owner Center

Online Owner Experience (U.S.) my.chevrolet.com

The Chevrolet online owner experience allows interaction with Chevrolet and keeps important vehicle-specific information in one place.

Membership Benefits

: Download owner's manuals and view vehicle-specific how-to videos.

: View maintenance schedules, alerts, and Vehicle Diagnostic Information. Schedule service appointments.

: View and print dealer-recorded service records and self-recorded service records.

: Select a preferred dealer and view locations, maps, phone numbers, and hours.

: Track your vehicle's warranty information.

: View active recalls by Vehicle Identification Number (VIN). See *Vehicle Identification Number (VIN)* ⇨ *400*.

: View GM Card, SiriusXM Satellite radio (if equipped), and OnStar account information (if equipped).

: Chat with online help representatives.

See my.chevrolet.com to register your vehicle.

Chevrolet Owner Centre (Canada) www.chevroletowner.ca

Visit the Chevrolet Owner Centre:

- Chat live with online help representatives.
- Locate owner resources such as lease-end, financing, and warranty information.
- Retrieve your favorite articles, quizzes, tips, and multimedia galleries organized into the Featured Articles and Auto Care Sections.

- Download owner's manuals.
- Find the Chevrolet-recommended maintenance services.

GM Mobility Reimbursement Program

GENERAL MOTORS MOBILITY

This program is available to qualified applicants for cost reimbursement, up to certain limits, of eligible aftermarket adaptive equipment required for the vehicle, such as hand controls or a wheelchair/scooter lift for the vehicle.

To learn about the GM Mobility program, see www.gmmobility.com or call the GM Mobility Assistance Center at 1-800-323-9935. Text Telephone (TTY) users, call 1-800-833-9935.

General Motors of Canada also has a Mobility program. See www.gm.ca or call 1-800-GM-DRIVE (800-463-7483) for details. TTY users call 1-800-263-3830.

Roadside Assistance Program

For U.S.-purchased vehicles, call 1-888-899-1327. (Text Telephone (TTY): 1-888-889-2438.)

For Canadian-purchased vehicles, call 1-800-268-6800.

Service is available 24 hours a day, 365 days a year.

Calling for Assistance

When calling Roadside Assistance, have the following information ready:

- Your name, home address, and home telephone number
- Telephone number of your location
- Location of the vehicle
- Model, year, color, and license plate number of the vehicle
- Odometer reading, Vehicle Identification Number (VIN), and delivery date of the vehicle
- Description of the problem

Coverage

Services are provided for the duration of the vehicle's powertrain warranty.

In the U.S., anyone driving the vehicle is covered. In Canada, a person driving the vehicle without permission from the owner is not covered.

Roadside Assistance is not a part of the New Vehicle Limited Warranty. General Motors North America and Chevrolet reserve the right to make any changes or discontinue the Roadside Assistance program at any time without notification.

General Motors North America and Chevrolet reserve the right to limit services or payment to an owner or

driver if they decide the claims are made too often, or the same type of claim is made many times.

Services Provided

- **Emergency Fuel Delivery:** Delivery of enough fuel for the vehicle to get to the nearest service station.
- **Lock-Out Service:** Service to unlock the vehicle if you are locked out. A remote unlock may be available if you have OnStar. For security reasons, the driver must present identification before this service is given.
- **Emergency Tow from a Public Road or Highway:** Tow to the nearest Chevrolet dealer for warranty service, or if the vehicle was in a crash and cannot be driven. Assistance is not given when the vehicle is stuck in the sand, mud, or snow.
- **Flat Tire Change:** Service to change a flat tire with the spare tire. The spare tire, if equipped, must be in good condition and properly inflated. It is the owner's responsibility for the repair or replacement of the tire if it is not covered by the warranty.
- **Battery Jump Start:** Service to jump start a dead battery.
- **Trip Interruption Benefits and Assistance:** If your trip is interrupted due to a warranty event, incidental expenses may be reimbursed within the Powertrain warranty period. Items considered are reasonable and customary hotel, meals, rental car, or a vehicle being delivered back to the customer, up to 500 miles.

Services Not Included in Roadside Assistance

- Impound towing caused by violation of any laws
- Legal fines
- Mounting, dismounting, or changing of snow tires, chains, or other traction devices

Service is not provided if a vehicle is in an area that is not accessible to the service vehicle or is not a regularly traveled or maintained public road, which includes ice and winter roads. Off-road use is not covered.

Services Specific to Canadian-Purchased Vehicles

- **Fuel Delivery:** Reimbursement is up to 7 liters. If available, diesel fuel delivery may be restricted. Propane and other fuels are not provided through this service.
- **Lock-Out Service:** Vehicle registration is required.
- **Trip Interruption Benefits and Assistance:** Must be over 150 km from where your trip was started to qualify. Pre-authorization, original detailed receipts, and a copy of the repair orders are required. Once authorization has been received, the Roadside Assistance advisor will help to make arrangements and explain how to receive payment.

- **Alternative Service:** If assistance cannot be provided right away, the Roadside Assistance advisor may give permission to get local emergency road service. You will receive payment, up to $100, after sending the original receipt to Roadside Assistance. Mechanical failures may be covered, however any cost for parts and labor for repairs not covered by the warranty are the owner responsibility.

Scheduling Service Appointments

When the vehicle requires warranty service, contact your dealer and request an appointment. By scheduling a service appointment and advising the service consultant of your transportation needs, your dealer can help minimize your inconvenience.

If the vehicle cannot be scheduled into the service department immediately, keep driving it until it can be scheduled for service, unless, of course, the problem is safety related. If it is, please call your dealership, let them know this, and ask for instructions.

If your dealer requests you to bring the vehicle for service, you are urged to do so as early in the work day as possible to allow for same-day repair.

Courtesy Transportation Program

To enhance your ownership experience, we and our participating dealers are proud to offer Courtesy Transportation, a customer support program for vehicles with the Bumper-to-Bumper (Base Warranty Coverage period in Canada), extended powertrain, and/or hybrid-specific warranties in both the U.S. and Canada.

Several Courtesy Transportation options are available to assist in reducing inconvenience when warranty repairs are required.

Courtesy Transportation is not a part of the New Vehicle Limited Warranty. A separate booklet entitled “Limited Warranty and Owner Assistance Information” furnished with each new vehicle provides detailed warranty coverage information.

Transportation Options

Warranty service can generally be completed while you wait. However, if you are unable to do so, your dealer may offer the following transportation options:

Shuttle Service

This includes one-way or round-trip shuttle service within reasonable time and distance parameters of your dealer's area.

Public Transportation or Fuel Reimbursement

If overnight warranty repairs are needed, and public transportation is used, the expense must be supported by original receipts and within the maximum amount allowed by GM for shuttle service. If U.S.

customers arrange their own transportation, limited reimbursement for reasonable fuel expenses may be available. Claim amounts should reflect actual costs and be supported by original receipts. See your dealer for information.

Courtesy Rental Vehicle

For an overnight warranty repair, the dealer may provide an available courtesy rental vehicle or provide for reimbursement of a rental vehicle. Reimbursement is limited and must be supported by original receipts as well as a signed and completed rental agreement and meet state/provincial, local, and rental vehicle provider requirements. Requirements vary and may include minimum age requirements, insurance coverage, credit card, etc. Additional fees such as fuel usage charges, taxes, levies, usage fees, excessive mileage, or rental usage beyond the completion of the repair are also your responsibility.

It may not be possible to provide a like vehicle as a courtesy rental.

Additional Program Information

All program options, such as shuttle service, may not be available at every dealer. Contact your dealer for specific availability.

General Motors reserves the right to unilaterally modify, change, or discontinue Courtesy Transportation at any time and to resolve all questions of claim eligibility pursuant to the terms and conditions described herein at its sole discretion.

Collision Damage Repair

If the vehicle is involved in a collision and it is damaged, have the damage repaired by a qualified technician using the proper equipment and quality replacement parts. Poorly performed collision repairs diminish the vehicle resale value, and safety performance can be compromised in subsequent collisions.

Collision Parts

Genuine GM Collision parts are new parts made with the same materials and construction methods as the parts with which the vehicle was originally built. Genuine GM Collision parts are the best choice to ensure that the vehicle's designed appearance, durability, and safety are preserved. The use of Genuine GM parts can help maintain the GM New Vehicle Limited Warranty.

Recycled original equipment parts may also be used for repair. These parts are typically removed from vehicles that were total losses in prior crashes. In most cases, the parts being recycled are from undamaged sections of the vehicle. A recycled original equipment GM part may be an acceptable choice to maintain the vehicle's originally designed appearance and safety performance; however, the history of these parts is not known. Such parts are not covered by the GM New Vehicle Limited Warranty, and any related failures are not covered by that warranty.

Aftermarket collision parts are also available. These are made by companies other than GM and may not have been tested for the vehicle. As a result, these parts may fit poorly, exhibit premature durability/corrosion problems, and may not perform properly in subsequent collisions. Aftermarket parts are not covered by the GM New Vehicle Limited Warranty, and any vehicle failure related to such parts is not covered by that warranty.

Repair Facility

GM also recommends that you choose a collision repair facility that meets your needs before you ever need collision repairs. Your dealer may have a collision repair center with GM-trained technicians and state-of-the-art equipment, or be able to recommend a collision repair center that has GM-trained technicians and comparable equipment.

Insuring the Vehicle

Protect your investment in the GM vehicle with comprehensive and collision insurance coverage. There are significant differences in the quality of coverage afforded by various insurance policy terms. Many insurance policies provide reduced protection to the GM vehicle by limiting compensation for damage repairs through the use of aftermarket collision parts. Some insurance companies will not specify aftermarket collision parts. When purchasing insurance, we recommend that you ensure that the vehicle will be repaired with GM original equipment collision parts. If such insurance coverage is not available from your current insurance carrier, consider switching to another insurance carrier.

If the vehicle is leased, the leasing company may require you to have insurance that ensures repairs with Genuine GM Original Equipment Manufacturer (OEM) parts or Genuine Manufacturer replacement parts. Read the lease carefully, as you may be charged at the end of the lease for poor quality repairs.

If a Crash Occurs

If there has been an injury, call emergency services for help. Do not leave the scene of a crash until all matters have been taken care of. Move the vehicle only if its position puts you in danger, or you are instructed to move it by a police officer.

Give only the necessary information to police and other parties involved in the crash.

For emergency towing see *Roadside Assistance Program* ⇨ *411*.

Gather the following information:

- Driver name, address, and telephone number
- Driver license number
- Owner name, address, and telephone number
- Vehicle license plate number

- Vehicle make, model, and model year
- Vehicle Identification Number (VIN)
- Insurance company and policy number
- General description of the damage to the other vehicle

Choose a reputable repair facility that uses quality replacement parts. See “Collision Parts” earlier in this section.

If the airbag has inflated, see *What Will You See after an Airbag Inflates?* ⇨ *64*.

Managing the Vehicle Damage Repair Process

In the event that the vehicle requires damage repairs, GM recommends that you take an active role in its repair. If you have a pre-determined repair facility of choice, take the vehicle there, or have it towed there. Specify to the facility that any required replacement collision parts be original equipment parts, either new Genuine GM parts or recycled original GM parts. Remember, recycled parts will not be covered by the GM vehicle warranty.

Insurance pays the bill for the repair, but you must live with the repair. Depending on your policy limits, your insurance company may initially value the repair using aftermarket parts. Discuss this with the repair professional, and insist on Genuine GM parts. Remember, if the vehicle is leased, you may be obligated to have the vehicle repaired with Genuine GM parts, even if your insurance coverage does not pay the full cost.

If another party's insurance company is paying for the repairs, you are not obligated to accept a repair valuation based on that insurance company's collision policy repair limits, as you have no contractual limits with that company. In such cases, you can have control of the repair and parts choices as long as the cost stays within reasonable limits.

Publication Ordering Information

Service Manuals

Service manuals have the diagnosis and repair information on the engine, transmission, axle, suspension, brakes, electrical system, steering system, body, etc.

Customer Literature

Owner’s manuals are written specifically for owners and are intended to provide basic operational information about the vehicle. The owner’s manual includes the Maintenance Schedule for all models.

Customer literature publications available for purchase include owner’s manuals, warranty manuals, infotainment manuals, and portfolios. Portfolios include an owner’s manual, warranty manual, infotainment manual, if applicable, and zip lock bag or pouch.

Current and Past Models

Service manuals and customer literature are available for many current and past model year GM vehicles.

To order, call 1-800-551-4123 Monday–Friday, 8:00 a.m.–6:00 p.m. eastern time

For credit card orders only (VISA, MasterCard, or Discover), see Helm, Inc. at: www.helminc.com.

To order by mail, write to:

Helm, Incorporated
Attention: Customer Service
47911 Halyard Drive
Plymouth, MI 48170

Make checks payable in U.S. funds.

Radio Frequency Statement

This vehicle has systems that operate on a radio frequency that complies with Part 15/Part 18 of the Federal Communications Commission (FCC) rules and with Innovation, Science and Economic Development (ISED) Canada's RSP-100 / license-exempt RSS's / ICES-001.

Operation is subject to the following two conditions:

1. The device may not cause harmful interference.
2. The device must accept any interference received, including interference that may cause undesired operation of the device.

Changes or modifications to any of these systems by other than an authorized service facility could void authorization to use this equipment.

Reporting Safety Defects

Reporting Safety Defects to the United States Government

If you believe that your vehicle has a defect which could cause a crash or could cause injury or death, you should immediately inform the National Highway Traffic Safety Administration (NHTSA) in addition to notifying General Motors.

If NHTSA receives similar complaints, it may open an investigation, and if it finds that a safety defect exists in a group of vehicles, it may order a recall and remedy campaign. However, NHTSA cannot become involved in individual problems between you, your dealer, or General Motors.

To contact NHTSA, you may call the Vehicle Safety Hotline toll-free at 1-888-327-4236 (TTY: 1-800-424-9153); go to *http://www.safercar.gov;* or write to:

Administrator, NHTSA
1200 New Jersey Avenue, S.E.
Washington, D.C. 20590

You can also obtain other information about motor vehicle safety from *http://www.safercar.gov.*

Reporting Safety Defects to the Canadian Government

If you live in Canada, and you believe that the vehicle has a safety defect, notify Transport Canada immediately, and notify General Motors of Canada Company. Call Transport Canada at 1-800-333-0510; go to:

www.tc.gc.ca/recalls (English)

www.tc.gc.ca/rappels (French)

or write to:

Transport Canada
Motor Vehicle Safety Directorate
Defect Investigations and Recalls Division
80 Noel Street
Gatineau, QC J8Z 0A1

Reporting Safety Defects to General Motors

In addition to notifying NHTSA (or Transport Canada) in a situation like this, notify General Motors.

In the U.S., call 1-800-222-1020, or write:

Chevrolet Motor Division
Chevrolet Customer Assistance Center
P.O. Box 33170
Detroit, MI 48232-5170

In Canada, call 1-800-263-3777 (English) or 1-800-263-7854 (French), or write:

General Motors of Canada Company
Customer Care Centre, Mail Code: CA1-163-005
1908 Colonel Sam Drive
Oshawa, Ontario L1H 8P7

In Mexico, call 01-800-466-0811.

In other Central America and Caribbean Countries, call 52-722-236-0680.

Vehicle Data Recording and Privacy

The vehicle has a number of computers that record information about the vehicle's performance and how it is driven. For example, the vehicle uses computer modules to monitor and control engine and transmission performance, to monitor the conditions for airbag deployment and deploy them in a crash, and, if equipped, to provide antilock braking to help the driver control the vehicle. These modules may store data to help the dealer technician service the vehicle. Some modules may also store data about how the vehicle is operated, such as rate of fuel consumption or average speed. These modules may retain personal preferences, such as radio presets, seat positions, and temperature settings.

Event Data Recorders

This vehicle is equipped with an event data recorder (EDR). The main purpose of an EDR is to record, in certain crash or near crash-like situations, such as an air bag deployment or hitting a road obstacle, data that will assist in understanding how a vehicle's systems performed. The EDR is designed to record data related to vehicle dynamics and safety systems for a short period of time, typically 30 seconds or less. The EDR in this vehicle is designed to record such data as:

- How various systems in your vehicle were operating;
- Whether or not the driver and passenger safety belts were buckled/fastened;
- How far (if at all) the driver was depressing the accelerator and/or brake pedal; and,
- How fast the vehicle was traveling.

These data can help provide a better understanding of the circumstances in which crashes and injuries occur.

Note

EDR data are recorded by your vehicle only if a non-trivial crash situation occurs; no data are recorded by the EDR under normal driving conditions and no personal data (e.g., name, gender, age, and crash location) are recorded. However, other parties, such as law enforcement, could combine the EDR data with the type of personally identifying data routinely acquired during a crash investigation.

To read data recorded by an EDR, special equipment is required, and access to the vehicle or the EDR is needed. In addition to the vehicle manufacturer, other parties, such as law enforcement, that have the special equipment, can read the information if they have access to the vehicle or the EDR.

GM will not access these data or share it with others except: with the consent of the vehicle owner or, if the vehicle is leased, with the consent of the lessee; in response to an official request by police or similar government office; as part of GM's defense of litigation through the discovery process; or, as required by law. Data that GM collects or receives may also be used for GM research needs or may be made available to others for research purposes, where a need is shown and the data is not tied to a specific vehicle or vehicle owner.

OnStar

If the vehicle is equipped with OnStar and has an active service plan, additional data may be collected through the OnStar system. This includes information about the vehicle's operation; collisions involving the vehicle; the use of the vehicle and its features; and, in certain situations, the location and approximate GPS speed of the vehicle. Refer to the OnStar Terms and Conditions and Privacy Statement on the OnStar website.

See *OnStar Additional Information* ⇨ *423*.

Infotainment System

If the vehicle is equipped with a navigation system as part of the infotainment system, use of the system may result in the storage of destinations, addresses, telephone numbers, and other trip information. See the infotainment manual for information on stored data and for deletion instructions.

OnStar

OnStar Overview
OnStar Overview 421

OnStar Services
Emergency 422
Security 423

OnStar Additional Information
OnStar Additional Information 423

OnStar Overview

Voice Command Button

Blue OnStar Button

Red Emergency Button

This vehicle may be equipped with a comprehensive, in-vehicle system that can connect to an OnStar Advisor for Emergency, Security, Navigation, Connections, and Diagnostics Services. OnStar services may require a paid service plan and data plan. OnStar requires the vehicle battery and electrical system, cellular service, and GPS satellite signals to be available and operating. OnStar acts as a link to existing emergency service providers. OnStar may collect information about you and your vehicle, including location information. See OnStar User Terms, Privacy Statement, and Software Terms for more details including system limitations at www.onstar.com (U.S.) or www.onstar.ca (Canada).

The OnStar system status light is next to the OnStar buttons. If the status light is:

- Solid Green: System is ready.
- Flashing Green: On a call.
- Red: Indicates a problem.
- Off: System is off. Press On twice to speak with an OnStar Advisor.

Press On or call 1-888-4ONSTAR (1-888-466-7827) to speak to an Advisor.

Functionality of the Voice Command button may vary by vehicle and region.

Press to:

- Open the OnStar app on the infotainment display. See the infotainment manual for information on how to use the OnStar app.

Or

- Make a call, end a call, or answer an incoming call.
- Give OnStar Hands-Free Calling voice commands.
- Give OnStar Turn-by-Turn Navigation voice commands.
- Obtain and customize the Wi-Fi hotspot name or SSID and password, if equipped.

Press to connect to an Advisor to:

- Verify account information or update contact information.
- Get driving directions.
- Receive a Diagnostic check of the vehicle's key operating systems.
- Receive Roadside Assistance.
- Manage Wi-Fi Settings, if equipped.

Press to get a priority connection to an OnStar Advisor available 24/7 to:

- Get help for an emergency.
- Be a Good Samaritan or respond to an AMBER Alert.
- Get assistance in severe weather or other crisis situations and find evacuation routes.

OnStar Services

Emergency

Emergency Services require an active safety and security plan. With Automatic Crash Response, built-in sensors can automatically alert a specially trained OnStar Advisor who is immediately connected in to the vehicle to help.

Press for a priority connection to an OnStar Advisor who can contact emergency service providers, direct them to your exact location, and relay important information.

With OnStar Crisis Assist, specially trained Advisors are available 24 hours a day, 7 days a week, to provide a central point of contact, assistance, and information during a crisis.

With Roadside Assistance, Advisors can locate a nearby service provider to help with a flat tire, a battery jump, or an empty gas tank.

Security

If equipped, OnStar provides these services:

- With Stolen Vehicle Assistance, OnStar Advisors can use GPS to pinpoint the vehicle and help authorities quickly recover it.
- With Remote Ignition Block, if equipped, OnStar can block the engine from being restarted.
- With Stolen Vehicle Slowdown, if equipped, OnStar can work with law enforcement to gradually slow the vehicle down.

Theft Alarm Notification

If equipped, if the doors are locked and the vehicle alarm sounds, a notification by text, e-mail, or phone call will be sent. If the vehicle is stolen, an OnStar Advisor can work with authorities to recover the vehicle.

OnStar Additional Information

In-Vehicle Audio Messages

Audio messages may play important information at the following times:

- Prior to vehicle purchase. Press On to set up an account.
- After change in ownership and at 90 days.

Transferring Service

Press On to request account transfer eligibility information. The Advisor can cancel or change account information.

Selling/Transferring the Vehicle

Call 1-888-4ONSTAR (1-888-466-7827) immediately to terminate your OnStar or connected services if the vehicle is disposed of, sold, transferred, or if the lease ends.

Reactivation for Subsequent Owners

Press On and follow the prompts to speak to an Advisor as soon as possible. The Advisor will update vehicle records and explain OnStar or connected service options.

How OnStar Service Works

Automatic Crash Response, Emergency Services, Crisis Assist, Stolen Vehicle Assistance, Remote Services, Roadside Assistance, and Hands-Free Calling are available on most vehicles. Not all OnStar services are available everywhere or on all vehicles. For more information, a full description of OnStar services, system limitations, and OnStar User Terms, Privacy Statement, and Software Terms:

- Call 1-888-4ONSTAR (1-888-466-7827).
- See www.onstar.com (U.S.).
- See www.onstar.ca (Canada).
- Call TTY 1-877-248-2080.

- Press ⓞⓝ to speak with an Advisor.

OnStar or connected services cannot work unless the vehicle is in a place where OnStar has an agreement with a wireless service provider for service in that area. The wireless service provider must also have coverage, network capacity, reception, and technology compatible with OnStar or connected services. Service involving location information about the vehicle cannot work unless GPS signals are available, unobstructed, and compatible with the OnStar hardware. OnStar or connected services may not work if the OnStar equipment is not properly installed or it has not been properly maintained. If equipment or software is added, connected, or modified, OnStar or connected services may not work. Other problems beyond the control of OnStar — such as hills, tall buildings, tunnels, weather, electrical system design and architecture of the vehicle, damage to the vehicle in a crash, or wireless phone network congestion or jamming — may prevent service.

See *Radio Frequency Statement* ⇨ *417*.

Services for People with Disabilities

Advisors provide services to help with physical disabilities and medical conditions.

Press ⓞⓝ to help:

- Locate a gas station with an attendant to pump gas.
- Find a hotel, restaurant, etc., that meets accessibility needs.
- Provide directions to the closest hospital or pharmacy in urgent situations.

TTY Users

OnStar has the ability to communicate to deaf, hard-of-hearing, or speech-impaired customers while in the vehicle. The available dealer-installed TTY system can provide in-vehicle access to all OnStar services, except Virtual Advisor and OnStar Turn-by-Turn Navigation.

OnStar Personal Identification Number (PIN)

A PIN is needed to access some OnStar services. The PIN will need to be changed the first time when speaking with an Advisor. To change the OnStar PIN, contact an OnStar Advisor by pressing ⓞⓝ or calling 1-888-4ONSTAR.

Warranty

OnStar equipment may be warranted as part of the vehicle warranty.

Languages

The vehicle can be programmed to respond in multiple languages.

Press ⓞⓝ and ask for an Advisor. Advisors are available in English, Spanish, and French. Available languages may vary by country.

Potential Issues

OnStar cannot perform Remote Door Unlock or Stolen Vehicle Assistance after the vehicle has been off continuously for 10 days without an ignition cycle. If the vehicle has not been started for 10 days, OnStar can contact Roadside Assistance or a locksmith to help gain access to the vehicle.

Global Positioning System (GPS)

- Obstruction of the GPS can occur in a large city with tall buildings; in parking garages; around airports; in tunnels and underpasses; or in an area with very dense trees. If GPS signals are not available, the OnStar system should still operate to call OnStar. However, OnStar could have difficulty identifying the exact location.
- In emergency situations, OnStar can use the last stored GPS location to send to emergency responders.

A temporary loss of GPS can cause loss of the ability to send a Turn-by-Turn Navigation route. The Advisor may give a verbal route or may ask for a call back after the vehicle is driven into an open area.

Cellular and GPS Antennas

Cellular reception is required for OnStar to send remote signals to the vehicle. Do not place items over or near the antenna to prevent blocking cellular and GPS signal reception.

Unable to Connect to OnStar Message

If there is limited cellular coverage or the cellular network has reached maximum capacity, this message may come on. Press On to try the call again or try again after driving a few miles into another cellular area.

Vehicle and Power Issues

OnStar services require a vehicle electrical system, wireless service, and GPS satellite technologies to be available and operating for features to function properly. These systems may not operate if the battery is discharged or disconnected.

Add-on Electrical Equipment

The OnStar system is integrated into the electrical architecture of the vehicle. Do not add any electrical equipment. See *Add-On Electrical Equipment* ⇨ *263*. Added electrical equipment may interfere with the operation of the OnStar system and cause it to not operate.

Vehicle Software Updates

OnStar or GM may remotely deliver software updates or changes to the vehicle without further notice or consent. These updates or changes may enhance or maintain safety, security, or the operation of the vehicle or the vehicle systems. Software updates or changes may affect or erase data or settings that are stored in the vehicle, such as OnStar Hands-Free Calling name tags, saved navigation destinations, or pre-set radio stations. Neither OnStar nor GM is responsible for any affected or erased data or

settings. These updates or changes may also collect personal information. Such collection is described in the OnStar privacy statement or separately disclosed at the time of installation. These updates or changes may also cause a system to automatically communicate with GM servers to collect information about vehicle system status, identify whether updates or changes are available, or deliver updates or changes. An active OnStar agreement constitutes consent to these software updates or changes and agreement that either OnStar or GM may remotely deliver them to the vehicle.

Privacy

The complete OnStar Privacy Statement may be found at www.onstar.com (U.S.), or www.onstar.ca (Canada). We recommend that you review it. If you have any questions, call 1-888-4ONSTAR (1-888-466-7827) or press to speak with an Advisor. Users of wireless communications are cautioned that the privacy of any information sent via wireless cellular communications cannot be assured. Third parties may unlawfully intercept or access transmissions and private communications without consent.

OnStar - Software Acknowledgements

Certain OnStar components include libcurl and unzip software and other third party software. Below are the notices and licenses associated with libcurl and unzip and for other third party software please see http://opensource.lge.com/index

www.onstar.com/us/en/

libcurl:

COPYRIGHT AND PERMISSION NOTICE

Copyright (c) 1996 - 2010, Daniel Stenberg, <daniel@haxx.se>.

All rights reserved.

Permission to use, copy, modify, and distribute this software for any purpose with or without fee is hereby granted, provided that the above copyright notice and this permission notice appear in all copies.

THE SOFTWARE IS PROVIDED “AS IS,” WITHOUT WARRANTY OF ANY KIND, EXPRESS OR IMPLIED, INCLUDING BUT NOT LIMITED TO THE WARRANTIES OF MERCHANTABILITY, FITNESS FOR A PARTICULAR PURPOSE AND NONINFRINGEMENT OF THIRD PARTY RIGHTS. IN NO EVENT SHALL THE AUTHORS OR COPYRIGHT HOLDERS BE LIABLE FOR ANY CLAIM, DAMAGES OR OTHER LIABILITY, WHETHER IN AN ACTION OF CONTRACT, TORT OR OTHERWISE, ARISING FROM, OUT OF OR IN CONNECTION WITH THE SOFTWARE OR THE USE OR OTHER DEALINGS IN THE SOFTWARE.

Except as contained in this notice, the name of a copyright holder shall not be used in advertising or otherwise to promote the sale, use

or other dealings in this Software without prior written authorization of the copyright holder.

unzip:

This is version 2005-Feb-10 of the Info-ZIP copyright and license. The definitive version of this document should be available at ftp://ftp.info-zip.org/pub/infozip/license.html indefinitely.

Copyright (c) 1990-2005 Info-ZIP. All rights reserved.

For the purposes of this copyright and license, “Info-ZIP” is defined as the following set of individuals:

Mark Adler, John Bush, Karl Davis, Harald Denker, Jean-Michel Dubois, Jean-loup Gailly, Hunter Goatley, Ed Gordon, Ian Gorman, Chris Herborth, Dirk Haase, Greg Hartwig, Robert Heath, Jonathan Hudson, Paul Kienitz, David Kirschbaum, Johnny Lee, Onno van der Linden, Igor Mandrichenko, Steve P. Miller, Sergio Monesi, Keith Owens, George Petrov, Greg Roelofs, Kai Uwe Rommel, Steve Salisbury, Dave Smith, Steven M. Schweda, Christian Spieler, Cosmin Truta, Antoine Verheijen, Paul von Behren, Rich Wales, Mike White.

This software is provided “as is,” without warranty of any kind, express or implied. In no event shall Info-ZIP or its contributors be held liable for any direct, indirect, incidental, special or consequential damages arising out of the use of or inability to use this software.

Permission is granted to anyone to use this software for any purpose, including commercial applications, and to alter it and redistribute it freely, subject to the following restrictions:

1. Redistributions of source code must retain the above copyright notice, definition, disclaimer, and this list of conditions.
2. Redistributions in binary form (compiled executables) must reproduce the above copyright notice, definition, disclaimer, and this list of conditions in documentation and/or other materials provided with the distribution. The sole exception to this condition is redistribution of a standard UnZipSFX binary (including SFXWiz) as part of a self-extracting archive; that is permitted without inclusion of this license, as long as the normal SFX banner has not been removed from the binary or disabled.
3. Altered versions–including, but not limited to, ports to new operating systems, existing ports with new graphical interfaces, and dynamic, shared, or static library versions–must be plainly marked as such and must not be misrepresented as being the original source. Such altered versions also must not be misrepresented as being Info-ZIP releases–including, but not limited to, labeling of the altered versions with the names “Info-ZIP” (or any variation thereof, including, but not limited to, different capitalizations), “Pocket UnZip,” “WiZ” or “MacZip”

without the explicit permission of Info-ZIP. Such altered versions are further prohibited from misrepresentative use of the Zip-Bugs or Info-ZIP e-mail addresses or of the Info-ZIP URL(s).

4. Info-ZIP retains the right to use the names “Info-ZIP,” “Zip,” “UnZip,” “UnZipSFX,” “WiZ,” “Pocket UnZip,” “Pocket Zip,” and “MacZip” for its own source and binary releases.

Connected Services

Connected Services

Navigation 429
Connections 430
Diagnostics 432

Connected Services

Navigation

Navigation requires a specific OnStar or connected service plan.

Press to receive Turn-by-Turn directions or have them sent to the vehicle's navigation screen, if equipped.

Turn-by-Turn Navigation

1. Press to connect to an Advisor.
2. Request directions to be downloaded to the vehicle.
3. Follow the voice-guided commands.

Using Voice Commands During a Planned Route

Functionality of the Voice Command button, if equipped, may vary by vehicle and region. For some vehicles, press to open the OnStar app on the infotainment display. For other vehicles press as follows.

Cancel Route

1. Press . System responds: "OnStar ready," then a tone.
2. Say "Cancel route." System responds: "Do you want to cancel directions?"
3. Say "Yes." System responds: "OK, request completed, thank you, goodbye."

Route Preview

1. Press . System responds: "OnStar ready," then a tone.
2. Say "Route preview." System responds with the next three maneuvers.

Repeat

1. Press . System responds: "OnStar ready," then a tone.

2. Say “Repeat.” System responds with the last direction given, then responds with “OnStar ready,” then a tone.

Get My Destination

1. Press . System responds: “OnStar ready,” then a tone.
2. Say “Get my destination.” System responds with the address and distance to the destination, then responds with “OnStar ready,” then a tone.

Send Destination to Vehicle

Directions can be sent to the vehicle’s navigation screen, if equipped.

Press , then ask the Advisor to download directions to the vehicle’s navigation system, if equipped. After the call ends, the navigation screen will provide prompts to begin driving directions. Routes that are sent to the navigation screen can only be canceled through the navigation system.

See www.onstar.com (U.S.) or www.onstar.ca (Canada).

Connections

The following services help with staying connected.

For coverage maps, see www.onstar.com (U.S.) or www.onstar.ca (Canada).

Ensuring Security

- Change the default passwords for the Wi-Fi hotspot and myChevrolet mobile application. Make these passwords different from each other and use a combination of letters, numbers, and symbols to increase the security.
- Change the default name of the SSID (Service Set Identifier). This is your network’s name that is visible to other wireless devices. Choose a unique name and avoid family names or vehicle descriptions.

Wi-Fi Hotspot (If Equipped)

The vehicle may have a built-in Wi-Fi hotspot that provides access to the Internet and web content at 4G LTE speed. Up to seven mobile devices can be connected. A data plan is required. Use the in-vehicle controls only when it is safe to do so.

1. To retrieve Wi-Fi hotspot information, press to open the OnStar app on the infotainment display, then select Wi-Fi Hotspot. On some vehicles, touch Wi-Fi or Wi-Fi Settings on the screen.
2. The Wi-Fi settings will display the Wi-Fi hotspot name (SSID), password, and on some vehicles, the connection type (no Internet connection, 3G, 4G, 4G LTE), and signal quality (poor, good, excellent).
3. To change the SSID or password, press or call 1-888-4ONSTAR to connect with an Advisor. On some

vehicles, the SSID and password can be changed in the Wi-Fi Hotspot menu.

After initial set-up, your vehicle's Wi-Fi hotspot will connect automatically to your mobile devices. Manage data usage by turning Wi-Fi on or off on your mobile device, using the myChevrolet mobile app, or by contacting an OnStar Advisor. On some vehicles, Wi-Fi can also be managed from the Wi-Fi Hotspot menu.

MyChevrolet Mobile App (If Available)

Download the myChevrolet mobile app to compatible Apple and Android smartphones. Chevrolet users can access the following services from a smartphone:

- Remotely start/stop the vehicle, if factory-equipped.
- Lock/unlock doors, if equipped with automatic locks.
- Activate the horn and lamps.
- Check the vehicle's fuel level, oil life, or tire pressure, if factory-equipped with the Tire Pressure Monitor System.
- Send destinations to the vehicle.
- Locate the vehicle on a map (U.S. market only).
- Turn the vehicle's Wi-Fi hotspot on/off, manage settings, and monitor data consumption, if equipped.
- Locate a dealer and schedule service.
- Request roadside assistance.
- Set a parking reminder with pin drop, take a photo, make a note, and set a timer.
- Connect with Chevrolet on social media.

Features are subject to change. For myChevrolet mobile app information and compatibility, see my.chevrolet.com.

An active OnStar or connected service plan may be required. A compatible device, factory-installed remote start, and power locks are required. Data rates apply. See www.onstar.com for details and system limitations.

Remote Services

Contact an OnStar Advisor to unlock the doors or sound the horn and flash the lamps.

Marketplace

OnStar Advisors can provide offers from restaurants and retailers on your route, help locate hotels, or book a room. These services vary by market.

OnStar Hands-Free Calling

Make and receive calls with the built-in wireless calling service, which requires available minutes. Functionality of the Voice Command button may vary by vehicle and region. For some vehicles, press to open the OnStar app on the infotainment display, then select Hands-Free calling. For other vehicles press as follows.

Make a Call

1. Press . System responds: “OnStar ready.”
2. Say “Call.” System responds: “Call. Please say the name or number to call.”
3. Say the entire number without pausing, including a “1” and the area code. System responds: “OK, calling.”

Calling 911 Emergency

1. Press . System responds: “OnStar ready.”
2. Say “Call.” System responds: “Call. Please say the name or number to call.”
3. Say “911” without pausing. System responds: “911.”
4. Say “Call.” System responds: “OK, dialing 911.”

Retrieve My Number

1. Press . System responds: “OnStar ready.”
2. Say “My number.” System responds: “Your OnStar Hands-Free Calling number is,” then says the number.

End a Call

Press . System responds: “Call ended.”

Verify Minutes and Expiration

Press and say “Minutes” then “Verify” to check how many minutes remain and their expiration date.

If equipped, press and touch Account Services to view the number of remaining minutes, available Wi-Fi data, and other account information.

Diagnostics

By monitoring and reporting on the vehicle's key systems, OnStar Advanced Diagnostics, if equipped, provides a way to keep up on maintenance. Capabilities vary by model. See www.onstar.com for details and system limitations. Features are subject to change. For updates on feature capabilities, see my.chevrolet.com. Message and data rates may apply.

Index

A

Accessories and Modifications 286
Accessory Power 211
Add-On Electrical Equipment . . . 263
Adding a Snow Plow or Similar Equipment 263
Additional Information
  OnStar 423
Additional Maintenance and Care 372, 376
Adjustments
  Lumbar, Front Seats 48
Agreements
  Trademarks and License 179
Air Cleaner/Filter, Engine 295
Air Conditioning 184, 186
Air Filter, Passenger Compartment 188
Air Suspension 233
Air Vents 187
Airbag System
  Check 68
  How Does an Airbag Restrain? 63
  What Makes an Airbag Inflate? 63
Airbag System (cont'd)
  What Will You See after an Airbag Inflates? 64
  When Should an Airbag Inflate? 63
  Where Are the Airbags? 62
Airbags
  Adding Equipment to the Vehicle 67
  Light On-Off 110
  On-Off Light 110
  On-Off Switch 65
  Readiness Light 110
  Servicing Airbag-Equipped Vehicles 67
  System Check 61
Alarm
  Vehicle Security 37
AM-FM Radio 148, 150
Antenna
  Fixed Mast 154
  Multi-band 154
Antilock Brake System (ABS) . . . 229
  Warning Light 114
Appearance Care
  Exterior 343
  Interior 348

Apple CarPlay and
Android Auto 177
Assistance Program,
Roadside 411
Audio
Bluetooth 164
Theft-Deterrent Feature 140
Audio Players
CD 155
Automatic
Headlamp System 132
Transmission 221
Transmission Fluid 295
Automatic Transmission
Manual Mode 224
Auxiliary
Roof Mounted Lamp 134
Auxiliary Jack 163
Avoiding Untrusted Media
Devices 155
Axle, Front 310
Axle, Rear 310

B

Battery
Exterior Lighting Battery
Saver 138
Load Management 137
Battery (cont'd)
Power Protection 138
Battery - North America 308, 336
Biodiesel 239
Blade Replacement, Wiper 312
Bluetooth
Overview 172, 173
Bluetooth Audio 164
Brake
Exhaust 232
System Warning Light 113
Brakes 304
Antilock 229
Fluid 307
Parking 231
Braking 192
Break-In, New Vehicle 205
Bulb Replacement
Center High-Mounted
Stoplamp (CHMSL) and
Cargo Lamp 315
Fog Lamps 314
Halogen Bulbs 313
Headlamp Aiming 313
Headlamps 313
Headlamps, Front Turn
Signal, Sidemarker, and
Parking Lamps 314
Bulb Replacement (cont'd)
Taillamps 315

C

Calibration 97
California
Perchlorate Materials
Requirements 286
California
Proposition
65 Warning 286, 308, 336,
Back Cover
Camera
Rear Vision (RVC) 237
Canadian Vehicle Owners 2
Capacities and
Specifications 401
Carbon Monoxide
Engine Exhaust 214
Winter Driving 200
Caution, Danger, and Warning 3
CD Player 155
Center Console Storage 93
Center High-Mounted
Stoplamp (CHMSL) and
Cargo Lamp 315
Center Seat 47
Chains, Tire 335

Charging
Wireless 101
Charging System Light 111
Check
Engine Light (Malfunction Indicator) 112
Child Restraints
Infants and Young Children 70
Lower Anchors and Tethers for Children 76
Older Children 69
Securing 85, 87
Systems 73
Circuit Breakers 316
Cleaning
Exterior Care 343
Interior Care 348
Climate Control
Systems 184, 186
Air Conditioning 184, 186
Heating 184, 186
Clock 97
Cluster, Instrument 104
Cold Weather Operation 240
Collision Damage Repair 414
Compartments
Storage 91
Compass 97
Connected Services
Connections 430
Diagnostics 432
Navigation 429
Connections
Connected Services 430
Control of a Vehicle 192
Convex Mirrors 39
Coolant
Engine Temperature Gauge . . 108
Cooling 184, 186
Cooling System 297
Courtesy Transportation Program 413
Cruise Control 234
Light 116
Cupholders 92
Customer Assistance 410
Offices 409
Text Telephone (TTY) Users 410
Customer Information
Publications Ordering Information 416
Customer Satisfaction Procedure 407

D

Damage Repair, Collision 414
Danger, Warning, and Caution 3
Data Collection
Infotainment System 420
OnStar 420
Data Recorders, Event 419
Daytime Running Lamps (DRL) 132
Defensive Driving 192
Diagnostics
Connected Services 432
Diesel
Starting Your Engine 208
Diesel Exhaust Fluid 28, 218
Diesel Exhaust Fluid (DEF)
Warning Light 115
Diesel Particulate Filter 215
Distracted Driving 191
Dome Lamps 136
Door
Locks 35
Power Locks 36
Drive Belt Routing, Engine 405
Driver Information Center (DIC) 117, 119

Driving
Characteristics and Towing Tips 247
Defensive 192
Drunk 192
For Better Fuel Economy 24
Hill and Mountain Roads 200
If the Vehicle is Stuck 202
Loss of Control 194
Off-Road 194
Off-Road Recovery 193
Vehicle Load Limits 203
Wet Roads 199
Winter 200

E

Electrical Equipment, Add-On 263
Electrical System
Engine Compartment Fuse Block 317
Fuses and Circuit Breakers . . . 316
Instrument Panel Fuse Block 320, 322
Overload 316
Emergency
OnStar 422
Engine
Air Cleaner/Filter 295
Check Light (Malfunction Indicator) 112
Compartment Overview 290
Coolant Temperature Gauge 108
Cooling System 297
Drive Belt Routing 405
Exhaust 214
Fan 302
Heater 210
Oil Life System 294
Oil Pressure Gauge 108
Overheating 301
Power Messages 122
Running While Parked 214
Starting Your Diesel 208
Engines
Diesel Fuel 238
Entry Lighting 137
Equipment, Towing 254
Event Data Recorders 419
Exhaust Brake 232
Exhaust Fluid
Diesel 218
Exit Lighting 137
Extender, Seat Belt 59
Exterior Cargo Lamps 135
Exterior Lamp Controls 130
Exterior Lamps Off Reminder . . . 131
Exterior Lighting Battery Saver 138

F

Fan
Engine 302
Filter 215
Replacement (Fuel) 244
Filter,
Engine Air Cleaner 295
Fixed Mast Antenna 154
Flash-to-Pass 131
Flashers, Hazard Warning 133
Flat Tire 335
Floor Console Storage 93
Fluid
Automatic Transmission 295
Brakes 307
Diesel Exhaust 28
Four-Wheel Drive Transfer Case 226
Power Steering 302
Washer 304
Fog Lamps 134
Bulb Replacement 314

Folding Mirrors 40
Four-Wheel Drive 226, 309
Frequency Statement
  Radio 417
Front Axle 310
Front Fog Lamp
  Light 116
Front Seats
  Adjustment 47
  Heated 50
Fuel
  Biodiesel 239
  Cold Weather Operation 240
  Diesel Engines 238
  Economy Driving 24
  Filling a Portable Fuel
    Container 246
  Filling the Tank 244
  Filter Replacement 244
  Gauge 107
  Low Fuel Warning Light 115
  Running out of Fuel 243
  Top Tier 238
  Water in Fuel 240
Fuel for Diesel Engines 238
Fuses
  Engine Compartment Fuse
    Block 317
Fuses (cont'd)
  Fuses and Circuit Breakers . . . 316
  Instrument Panel Fuse
    Block 320, 322

G
Gauges
  Engine Coolant
    Temperature 108
  Engine Oil Pressure 108
  Fuel 107
  Odometer 107
  Speedometer 107
  Tachometer 107
  Trip Odometer 107
  Voltmeter 109
  Warning Lights and
    Indicators 103
General Information
  Service and Maintenance 352
  Towing 247
  Vehicle Care 286
Glass Replacement 313
Glove Box 91
GM Mobility Reimbursement
  Program 411

H
Halogen Bulbs 313
Hazard Warning Flashers 133
Head Restraints 46
Headlamps
  Aiming 313
  Automatic 132
  Bulb Replacement 313
  Daytime Running
    Lamps (DRL) 132
  Flash-to-Pass 131
  Headlamps, Front Turn
    Signal, Sidemarker, and
    Parking Lamps 314
  High-Beam On Light 116
  High/Low Beam Changer 131
  Lamps On Reminder 116
Heated Front Seats 50
Heated Mirrors 40
Heater
  Engine 210
Heating 184, 186
High-Beam On Light 116
Hill and Mountain Roads 200
Home Page 145, 147
Hood 287
Horn 96

How to Wear Seat Belts Properly 53
HVAC 184, 186

I

Ignition Positions 206
Immobilizer 38
Infants and Young Children, Restraints 70
Information Publication Ordering 416
Infotainment 139
Infotainment System 420
Instrument Cluster 104
Instrument Panel Storage Area 91
Interior Rearview Mirrors 41
Introduction 2

J

Jack Auxiliary 163
Jump Starting - North America 336

K

Keyless Entry Remote (RKE) System 32
Keys 29

L

Lamps
Auxiliary Roof Mounted Lamp 134
Daytime Running (DRL) 132
Dome 136
Exterior Cargo 135
Exterior Controls 130
Exterior Lamps Off Reminder 131
Exterior Lighting Battery Saver 138
Malfunction Indicator (Check Engine) 112
On Reminder 116
Reading 136
Taillamps 315
Lap Belt 58
Lap-Shoulder Belt 55
LATCH System Replacing Parts after a Crash 85
LATCH, Lower Anchors and Tethers for Children 76
LED Lighting 314
Lighting
Entry 137
Exit 137
Lighting (cont'd)
Illumination Control 135
LED 314
Lights
Airbag On-Off 110
Airbag Readiness 110
Antilock Brake System (ABS) Warning 114
Brake System Warning 113
Charging System 111
Check Engine (Malfunction Indicator) 112
Cruise Control 116
Diesel Exhaust Fluid (DEF) 115
Flash-to-Pass 131
Front Fog Lamp 116
High-Beam On 116
High/Low Beam Changer 131
Low Fuel Warning 115
Power Take-off 117
Seat Belt Reminders 109
Security 116
Tow/Haul Mode 114
Traction Off 115
Wait to Start 115
Locks
Door 35
Lockout Protection 36

Locks (cont'd)
Power Door 36
Safety 36
Loss of Control 194
Low Fuel Warning Light 115
Lower Anchors and Tethers for Children (LATCH System) 76
Lumbar Adjustment 48
Front Seats 48

M

Maintenance Records 399
Maintenance and Care Additional 372, 376
Maintenance Schedule 354
Recommended Fluids and Lubricants 391
Transfer Case 226
Malfunction Indicator Lamp 112
Manual Mirrors 39
Manual Mode 224
Manual Windows 42
Media
Avoiding Untrusted Devices . . 155
Messages
Engine Power 122
Messages (cont'd)
Vehicle 122
Vehicle Speed 122
Mirrors
Automatic Dimming Rearview 41
Convex 39
Folding 40
Heated 40
Manual 39
Manual Rearview 41
Power 40
Trailer Tow 39
Mirrors, Interior Rearview 41
Multi-band Antenna 154

N

Navigation
Connected Services 429
New Vehicle Break-In 205
Noise Control System 311

O

Odometer 107
Trip 107
Off-Road 194
Driving 194
Recovery 193
Oil
Engine 291
Engine Oil Life System 294
Engine Oil Pressure Gauge . . . 108
Older Children, Restraints 69
Online Owner Center 410
OnStar 420
OnStar Additional Information 423
OnStar Emergency 422
OnStar Overview 421
OnStar Security 423
Operation
Fog Lamps 134
Outlets
Power 99
Overheating, Engine 301
Overview 140, 144
Owner Checks and Services 361

P

Park
Shifting Into 212
Shifting Out of 213
Parking
Brake 231

Parking (cont'd)
Over Things That Burn 213
Passenger Compartment Air Filter 188
Perchlorate Materials Requirements, California 286
Personalization
Vehicle 123
Phone
Apple CarPlay and Android Auto 177
Bluetooth 172, 173
Port
USB 158
Power
Door Locks 36
Mirrors 40
Outlets 99
Protection, Battery 138
Retained Accessory (RAP) 211
Seat Adjustment 48
Steering Fluid 302
Windows 42
Power Take-Off (PTO) 266
Power Take-Off Light 117
Pregnancy, Using Seat Belts 58
Privacy
Vehicle Data Recording 419
Program
Courtesy Transportation 413
Proposition
65 Warning, California ..... 286, 308, 336, Back Cover
Publication Ordering Information 416

R

Radio Frequency Statement 417
Radio Reception 154
Radios
AM-FM Radio 148, 150
Satellite 152
Reading Lamps 136
Rear Axle 310
Rear Seats 51
Rear Vision Camera (RVC) 237
Rearview Mirrors 41
Automatic Dimming 41
Reclining Seatbacks 49
Recognition
Voice 165
Recommended Fluids and Lubricants 391
Records
Maintenance 399
Reimbursement Program, GM Mobility 411
Remote Keyless Entry (RKE) System 32
Remote Vehicle Start 34
Replacement
Glass 313
Replacement Parts
Airbags 68
Maintenance 398
Replacing Airbag System 68
Replacing LATCH System Parts after a Crash 85
Replacing Seat Belt System Parts after a Crash 60
Reporting Safety Defects
Canadian Government 418
General Motors 418
U.S. Government 417
Restraints
Where to Put 74
Retained Accessory Power (RAP) 211
Ride Control Systems
Air Suspension 233
Roads
Driving, Wet 199

Roadside Assistance Program 411
Rotation, Tires 328
Routing, Engine Drive Belt 405
Running out of Fuel 243
Running the Vehicle While Parked 214

S

Safety Defects Reporting
  Canadian Government 418
  General Motors 418
  U.S. Government 417
Safety Locks 36
Safety System Check 59
Satellite Radio 152
Scheduling Appointments 413
Seat Belts 52
  Care 59
  Extender 59
  How to Wear Seat Belts Properly 53
  Lap Belt 58
  Lap-Shoulder Belt 55
  Reminders 109
  Replacing after a Crash 60
  Use During Pregnancy 58
Seats
  Adjustment, Front 47
  Center Seat 47
  Head Restraints 46
  Heated Front 50
  Lumbar Adjustment, Front 48
  Power Adjustment, Front 48
  Rear 51
  Reclining Seatbacks 49
Securing Child Restraints 85, 87
Security
  Light 116
  OnStar 423
  Vehicle 37
  Vehicle Alarm 37
Service 189
  Accessories and Modifications 286
  Climate Control System 184, 186
  Doing Your Own Work 287
  Maintenance Records 399
  Maintenance, General Information 352
  Scheduling Appointments 413
Services
  Special Application 360
Servicing the Airbag 67
Shifting
  Into Park 212
  Out of Park 213
Signals, Turn and Lane-Change 133
Snow Plow 263
Software Updates 147
Special Application Services 360
Specifications and Capacities 401
Speedometer 107
Start Vehicle, Remote 34
Starter Switch Check 312
Starting the Diesel Engine 208
Steering 193
  Fluid, Power 302
  Wheel Adjustment 95
  Wheel Controls 95
Storage Areas
  Center Console 93
  Floor Console 93
  Glove Box 91
  Instrument Panel 91
  Sunglasses 92
Storage Compartments 91
Stuck Vehicle 202
Sun Visors 44
Sunglass Storage 92

Switches
Airbag On-Off 65
Symbols 3
System
Infotainment 139, 420
Noise Control 311

T

Tachometer 107
Taillamps 315
Text Telephone (TTY) Users 410
Theft-Deterrent Systems 38
Immobilizer 38
Time 97
Tires 325
Chains 335
If a Tire Goes Flat 335
Inspection 327
Pressure 326
Rotation 328
Wheel Alignment and Tire Balance 331
Wheel Replacement 332
When It Is Time for New Tires 329
Top Tier Fuel 238
Tow/Haul Mode 225
Tow/Haul Mode Light 114
Towing
Driving Characteristics 247
Equipment 254
General Information 247
Trailer 250
Vehicle 339
Traction
Control System (TCS) 233
Off Light 115
Trademarks and License Agreements 179
Trailer
Tow Mirrors 39
Towing 250
Transfer Case 226
Transmission
Automatic 221
Fluid, Automatic 295
Transportation Program, Courtesy 413
Trip Odometer 107
Turn and Lane-Change Signals 133

U

Updates
Software 147
USB Port 158
Using This Manual 2

V

Vehicle
Alarm System 37
Canadian Owners 2
Control 192
Identification Number (VIN) . . . 400
Load Limits 203
Messages 122
Personalization 123
Remote Start 34
Security 37
Speed Messages 122
Towing 339
Vehicle Care
Tire Pressure 326
Vehicle Data Recording and Privacy 419
Ventilation, Air 187
Visors 44
Voice Recognition 165
Voltmeter Gauge 109

W

Wait to Start Light 115
Warning
  Brake System Light 113
  Caution and Danger 3
Warning Lights, Gauges, and
  Indicators 103
Warnings
  Hazard Flashers 133
Washer Fluid 304
Water in Fuel 240
Wheels
  Alignment and Tire Balance .. 331
  Replacement 332
When It Is Time for New
  Tires 329
Where to Put the Restraint 74
Windows 41
  Manual 42
  Power 42
Windshield
  Wiper/Washer 96
Winter
  Driving 200
Wiper Blade Replacement 312
Wireless Charging 101

WARNING

Operating, servicing and maintaining a passenger vehicle or off-highway motor vehicle can expose you to chemicals including engine exhaust, carbon monoxide, phthalates, and lead, which are known to the State of California to cause cancer and birth defects or other reproductive harm. To minimize exposure, avoid breathing exhaust, do not idle engine except as necessary, service your vehicle in a well-ventilated area and wear gloves or wash your hands frequently when servicing your vehicle. For more information go to www.P65Warnings.ca.gov/passenger-vehicle.

U.S. Only

84181908 A