Alfa 156 GTA

OWNER'S MANUAL

Downloaded from www.Manualslib.com manuals search engine

Dear Client,

Thank you for choosing Alfa Romeo.

Your **Alfa 156 GTA** *has been designed to guarantee the safety, comfort and driving pleasure typical of Alfa Romeo.*

This booklet will help you to get to know the characteristics and operation of your car.

The following pages contain all the indications necessary for you to be able to maintain the high standards of performance, quality, safety and respect for the environment which characterize this **Alfa 156 GTA**.

The Warranty Booklet also contains the regulations, the warranty certificate and a guide to the services offered by Alfa Romeo.

Services which are essential and precious because, when you purchase an Alfa Romeo you are not only acquiring a car, but the tranquillity that comes from knowing that an efficient, willing and widespread organization is at your service for any assistance problems you may have.

What's more every single component of the **Alfa 156 GTA** *is fully recyclable. At the end of your car's useful lifespan any Alfa Romeo dealer would be pleased to make arrangements for you car to be recycled (in compliance with current regulations in force).*

Nature benefits in two ways: there's no pollution from waste disposal, and the demand for raw materials is reduced.

Have a good trip.

This booklet describes all the versions of the* Alfa 156 GTA*, so you should only consider the information concerning the trim level, engine and version purchased by you.

Downloaded from www.Manualslib.com manuals search engine

MUST BE READ!

REFUELLING

Only refuel with unleaded petrol with octane rating (RON) not less than 95.

STARTING THE ENGINE

Engines with mechanical transmission: make sure the handbrake is pulled; put the gear lever into neutral; press the clutch pedal down to the floor without touching the accelerator, then turn the ignition key to **AVV** and release it as soon as the engine starts.

Engines with Selespeed transmission: keep the brake pedal fully depressed; turn the ignition key to **AVV** and release it as soon as the engine has started; the transmission sets to neutral automatically (the display shows position **N**).

PARKING OVER FLAMMABLE MATERIAL

While functioning normally, the catalytic converter reaches high temperatures. For this reason do not park the car over inflammable material, grass, dry leaves, pine needles, etc.: fire hazard.

PROTECTING THE ENVIRONMENT

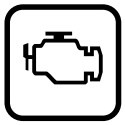

A system for continuously monitoring emission system components to ensure greater environmental protection is fitted in your car.

Downloaded from www.Manualslib.com manuals search engine

ELECTRICAL ACCESSORIES

If, after buying the car, you decide to add electrical accessories (that will gradually drain the battery), contact Alfa Romeo Authorized Services. They can calculate the overall electrical requirement and check that the car's electric system can support the required load.

CODE CARD

Keep the code card in a safe place, not in the car. You should always keep the electronic code written on the CODE card with you in case you need to carry out an emergency start-up procedure.

PROGRAMMED MAINTENANCE

Correct maintenance of the car is essential for ensuring it stays in tip-top condition and safeguards its safety features, its environmental friendliness and low running costs for a long time to come.

THE OWNER'S MANUAL CONTAINS...

. . .information, tips and important warnings regarding the safe, correct driving of your car, and its maintenance. Pay particular attention to the symbols ⚠ (personal safety) ♻ (environmental protection) ⚠ (car well-being).

Downloaded from www.Manualslib.com manuals search engine

Any queries concerning servicing should be forwarded to the showroom from which the vehicle was purchased, the subsidiary company or to our branch offices or associated companies.

Warranty Booklet

The Warranty Booklet is delivered together with every new vehicle and contains the regulations tied to the services given by Alfa Romeo Services and to the warranty conditions.

Correctly carrying out the scheduled services specified by the manufacturer is the best way to maintain the performance, safety characteristics and low running costs of your vehicle. It is also necessary to maintain warranty cover.

"Service" guide

This contains the Alfa Romeo Authorized Services. The services can be recognized by the presence of the Alfa Romeo badge and logo.

The Alfa Romeo organization in Italy can be found in the telephone book under the letter "A" Alfa Romeo.

Not all the models described in this booklet are available in all countries. Only some of the fittings described in this booklet are fitted as standard to the vehicle. The list of available accessories should be requested from the Alfa Romeo Dealers.

Downloaded from www.Manualslib.com manuals search engine

THE SYMBOLS USED IN THIS BOOKLET

The symbols illustrated in these pages show the subjects which should, in particular, be closely studied.

PERSONAL SAFETY

Warning: partially or fully ignoring these rules may lead to serious injury.

PROTECTING THE ENVIRONMENT

This indicates the correct procedures to be followed to prevent the vehicle from damaging the environment.

VEHICLE SAFETY

Warning: partially or fully ignoring these rules may lead to serious damage being caused to the vehicle which, in some circumstances, may cause forfeiture of the warranty cover.

The texts, illustrations and specifications given in this booklet refer to the vehicle at the time of going to press.

As part of our ongoing striving to improve our products, Alfa Romeo may introduce technical changes during production, therefore the specifications and fittings may be altered without prior notice.

For details on this subject, please apply to the manufacturer's sales network.

Downloaded from www.Manualslib.com manuals search engine

GETTING TO KNOW YOUR CAR

SYMBOLS

Special coloured labels have been attached near to or actually on some of the components making up your **Alfa 156 GTA**. These labels bear symbols that remind you of the precautions to be taken as regards that particular component.

ALFA ROMEO CODE SYSTEM

To increase protection against attempted theft, the car is fitted with an electronic engine lock system (Alfa Romeo CODE) which is activated automatically when the ignition key is removed. In fact the grip of each key contains an electronic device which modulates the radio frequency signal transmitted when the engine is started by a special aerial incorporated in the ignition switch. This modulated signal is the "password" by which the control unit recognises the key and only in this condition can the engine be started.

THE KEYS

The car is delivered with two keys, key (**A-fig.1**) with metal insert and remote control function and another key with metal insert only, without remote control.

The key remote control operates:

— door centralised opening/locking

— opening luggage compartment boot/tailgate

— activation/deactivation of electronic alarm (if existing)

A0B0016m

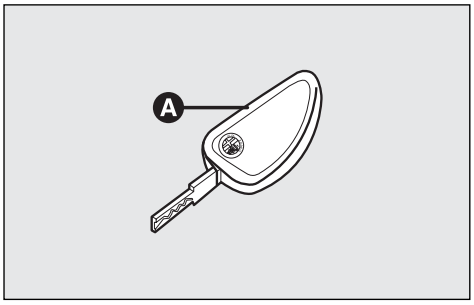

fig. 1

Downloaded from www.Manualslib.com manuals search engine

Key metal insert operates:

— the ignition switch

— the driver's door lock and, optional for versions/markets where applicable, the passenger's door lock

— glove box lock

— passenger's side Air bag deactivation.

IMPORTANT In order to ensure perfect efficiency of the electronic devices contained inside the keys, they should never be directly exposed to the rays of the sun.

The CODE card (**fig. 2**) is also supplied with the key and it contains the codes of the keys (both the mechanical one and the electronic one for emergency starting).

The code numbers on the CODE card must be kept in a safe place, not in the car.

The driver should always keep the electronic code given on the CODE card with him in the event of having to carry out emergency starting.

If the car changes owner, the new owner must be given all the keys and the CODE card.

KEY WITH REMOTE CONTROL

The key is fitted with (**fig. 3**):

— a metal insert (**A**) that can be enclosed in the key grip

— button (**B**) for remote opening/closing of the doors and turning the electronic alarm on/off (where fitted)

— a button (**C**) for remote boot unlocking

— removable hook ring (**D**)

— a button (**E**) for power-assisted opening of the metal insert.

A0B0010m

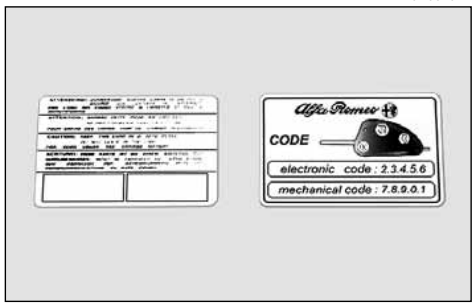

fig. 2

A0B9000m

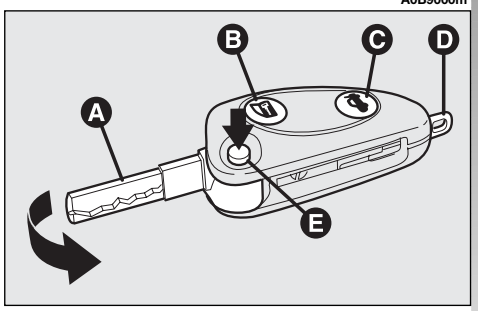

fig. 3

Downloaded from www.Manualslib.com manuals search engine

The metallic insert (**A**) of the key operates:

— the ignition switch

— the driver's door lock and, optional for versions/markets where applicable, the passenger's door lock

— the glovebox lock

— passenger's Air bag deactivation.

To move the metallic insert out of the key grip, press button (**E**).

WARNING

When button (E) is pressed, take the utmost care to prevent the metal insert from causing injury or damage when it comes out. Button (E) must only be pressed when the key is away from the body, in particular the eyes, and from objects that could be spoilt (e.g. clothes). Never leave the key unattended to prevent anyone, especially children, from holding it and pressing button (E) inadvertently.

To insert the metallic insert in the key grip, press the button (**E-fig. 3**) to release the insert and turn it in the direction of the arrow until it clicks.

To open/close the doors by remote control, press button (**B**). On cars fitted with electronic alarm system, pressing button (**B**) also turns the electronic alarm .

IMPORTANT Certain radio devices outside the car (e.g. mobile phones, HAM radio systems) could disturb the remote control frequency. In this case the remote control could malfunction.

OPENING THE BOOT

The boot can be opened by remote control from outside pressing button (**C-fig. 3**), also when the electronic alarm is on.

In this case the alarm system switches off the boot volumetric protection and control sensor, the system gives two “beeps“ (with the exceptions of versions for certain markets) and the direction indicators light up for about three seconds.

Closing the boot again, the control functions are restored, the system gives two “beeps“ (with the exceptions of versions for certain markets) and the direction indicators light up for about three seconds.

Downloaded from www.Manualslib.com manuals search engine

OPERATION (fig. 4)

Each time the ignition key is turned to **STOP** position, the Alfa Romeo CODE system deactivates the functions of the engine electronic control unit.

Each time the engine is started, turning the key to the **MAR**, position, the control unit of the Alfa Romeo CODE system sends a recognition code to the engine control unit to deactivate the inhibition of the functions. The recognition code, which is crypted and variable between over 4 billion combinations, is only sent if the system control unit has recognised the code sent to it by the key, which contains an electronic transmitter, through an aerial in the ignition switch.

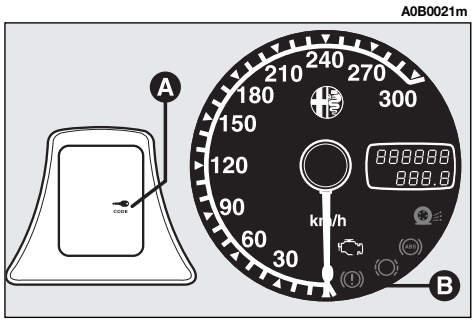

fig. 4

This condition is indicated by a brief flash of the warning light (**A**) on the check panel.

If the code has not been recognised correctly, the warning light (**A**) stays on together with the warning light (**B**).

In this case, you are recommended to return the key to the **STOP** position and then back to **MAR**; if the inhibition persists, try again possibly with the other key provided with the car. If it is still impossible to start the car carry out the emergency starting procedure described in section "In an emergency" and turn to an Alfa Romeo Authorized Service.

IMPORTANT Every electronic key has its own code, which must be memorised by the system control unit. To memorise new keys, up to a maximum of eight, apply solely to Alfa Romeo Authorized Services taking with you all the keys in your possession, the CODE card, a personal identity document and the car's possession documents.

The codes of the keys not provided during the new memorising procedure are erased from the memory. This is to ensure that any lost or stolen keys can no longer be used to start the car.

IMPORTANT The Alfa Romeo CODE (CODE) warning light comes on when travelling with the ignition key on **MAR**:

1) If the warning lamp lights up while the car is moving, it means that the system is running a self-diagnosis (e.g. due to a voltage drop). The first time you stop you can test the system as follows: switch the engine off by turning the ignition key to **STOP**; then turn the key back to **MAR**: the warning lamp will light up and should go out in the space of about one second. If the warning lamp fails to go out, leave the key at **STOP** for more than 30 seconds and repeat the procedure described previously. If the problem persists, contact your Alfa Romeo Authorized Service.

Downloaded from www.Manualslib.com manuals search engine

2) If the warning lamp flashes it means that the car is not protected by the immobiliser. Contact your Alfa Romeo Authorized Service immediately and get them to store the codes of all the keys in the memory.

If after 2 seconds with the key in the MAR position, the warning light turn on again flashing, this means that the code of the keys has not been memorised, thus the car is not protected by the Alfa Romeo CODE system against attempted theft. In this case, contact an Alfa Romeo Authorized Service to have the key codes memorised.

IMPORTANT The system is protected by a 10A fuse housed in the fuse-holder set under the dashboard (see paragraph "If a fuse blows" in "In an emergency" chapter).

CHANGING THE BATTERY OF THE KEY WITH REMOTE CONTROL

If when pressing button (**B** or **C-fig. 5**) the control is rejected or is not performed, the battery should be replaced by a new one of the same type to be found c/o normal retailers. On versions fitted with electronic alarm, the need to replace the remote control battery is indicated by the coming on, with fixed light, of the deterrent led (**A-fig. 6**) set on the dashboard near the central air vent.

Dead batteries are harmful for the environment. They must be disposed of in special containers as specified by current regulations. Avoid exposure to naked flames and high temperatures. Keep out of reach of children.

A0B9000m

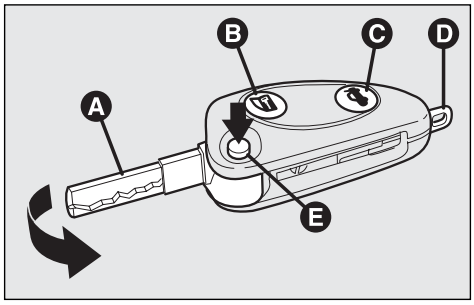

fig. 5

A0B0011m

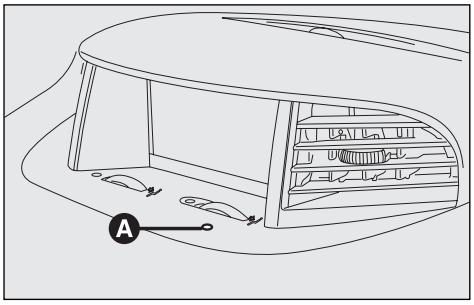

fig. 6

Downloaded from www.Manualslib.com manuals search engine

To change the battery (**fig. 7**):

— move the metal insert (**A**) to the unlocking position;

— turn the pin (**B**), taking the reference mark (dot) of the cut to the **UNLOCK** position (**2**);

— working on the notch (**C**) remove the battery holder (**D**);

— change the battery (**E**) putting it in the position shown on the holder;

— insert the holder back in the key and lock it, turning the reference mark of the pin (**B**) to the **LOCK** position (**1**).

A0B0047m

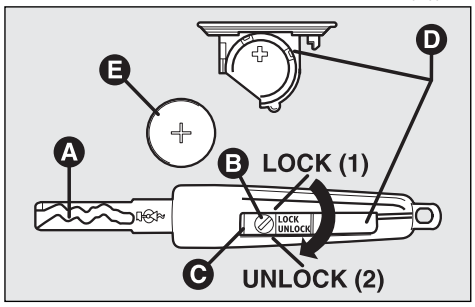

fig. 7

ELECTRONIC ALARM

DESCRIPTION

The system comprises: transmitter, receiver, control unit with siren and volumetric sensors and anti-lift sensor. The electronic alarm is controlled by a receiver inside the car and it is turned on and off through the remote control incorporated in the key which sends the crypted and variable code. The electronic alarm monitors: unlawful opening of the doors, bonnet and boot (perimetral protection), operation of the ignition key, battery and emergency key cable cutting, the presence of moving bodies (volumetric protection), any abnormal raising/sloping of the car and operates the central door locking system. It also makes it possible to cut off the volumetric protection.

IMPORTANT The engine inhibitor function is guaranteed by the Alfa Romeo CODE system which is activated automatically when the ignition key is removed.

REMOTE CONTROL (fig. 8)

The remote control is built into the key and it is fitted with a button for activating the alarm (**B-fig. 8**).

A0B9000m

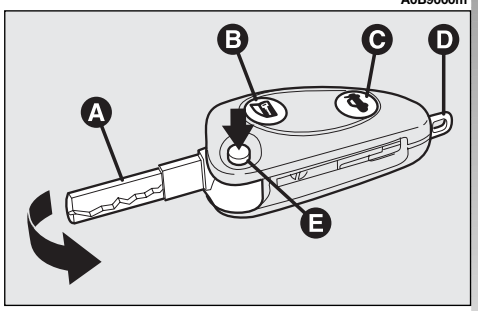

fig. 8

Downloaded from www.Manualslib.com manuals search engine

REQUEST FOR ADDITIONAL KEYS WITH REMOTE CONTROL

The receiver can recognise up to 5 keys with remote control. If during the life of the car a new key with remote control is needed for any reason whatsoever, contact Alfa Romeo Authorized Services directly, taking with you the CODE card, a personal identity document and the car's possession documents.

ACTIVATING THE ALARM

When the doors and boot/bonnet lids are closed and the ignition key is in the **STOP** or **PARK** position (key removed), point the remote control towards the car and then press and release the button (**B-fig. 8**).

With the exception of some markets the system sounds a beep and the door lock is engaged.

Engagement of the alarm is preceded by a self-diagnosis phase characterised by a change in the frequency at which the deterrent led (**A-fig. 9**) on the dashboard flashes. If an anomaly is detected the system gives off a further beep.

A0B0011m

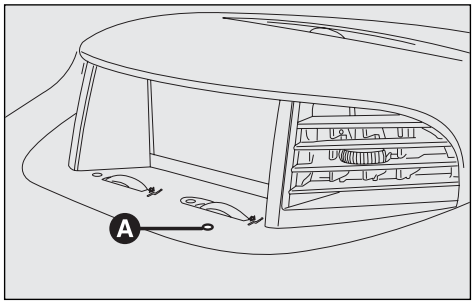

fig. 9

Surveillance

When the system has been turned on, the led (**A-fig. 9**) on the dashboard will flash to indicate that the system is in the surveillance mode. The led will flash continuously while the system is under surveillance.

IMPORTANT Operation of the electronic alarm is adapted at the origin to the regulations of the different countries.

Self-diagnosis and monitoring of doors and bonnet/boot

If, after the alarm has been activated, a second acoustic signal is heard, check that all the doors and bonnet/boot are closed properly and engage the system once again.

On the other if a door or bonnet/boot lid is not correctly closed it will not be controlled by the system.

If the control signal is repeated when the doors and bonnet/boot are closed properly this means that the self-diagnosis function has detected a system operating fault, in which case it is necessary to contact Alfa Romeo Authorized Services.

Downloaded from www.Manualslib.com manuals search engine

DEACTIVATING THE ALARM

To deactivate the alarm, press the button on the key with remote control. The system performs the following (with the exception of some markets):

— the direction indicators turn on twice briefly

— two beeps are sounded briefly by the siren

— the doors are released.

IMPORTANT If the led (**A-fig. 9**) in the car stays on when the system has been deactivated, (maximum of 2 minutes or until the ignition key is moved to **MAR**) the following should be borne in mind:

— if the led stays on permanently, it means that the remote control batteries are flat and need replacing;

— if the led continues to flash, but at different intervals than normal, it means that attempts to steal the car have been made, counting the number of flashes it is also possible to identify the type of attempt:

1 flash:	right front door
2 flashes:	left front door
3 flashes:	right rear door
4 flashes:	left rear door
5 flashes:	volumetric sensors
6 flashes:	bonnet
7 flashes:	boot
8 flashes:	tampering with car starting cables
9 flashes:	tampering with battery or cutting emergency key cables
10 flashes:	at least three causes of alarm.

AUTOMATIC ENGAGEMENT OF THE ALARM (optional for versions/markets where applicable)

If the alarm has not been engaged with the remote control it will come on automatically after an established time of 30 seconds from the moment that the ignition key has been turned to the **STOP** or **PARK** positions and a door or the boot has been opened and then closed again. This condition is shown by the intermittent illumination of the led in the car and by the signalling described previously.

To deactivate the alarm press the button on the remote control.

The alarm is also automatically engaged when the doors are closed using the key.

When the alarm is engaged automatically the doors are not locked.

Downloaded from www.Manualslib.com manuals search engine

WHEN THE ALARM IS TRIGGERED

When the alarm is engaged it will sound when:

— one of the doors, the bonnet or the tailgate is opened;

— the battery is disconnected or the electric cables are cut, or the emergency key cables are cut;

— intrusion into the passenger compartment, e.g. window being broken (volumetric protection);

— attempt to start the engine (key at **MAR**);

— abnormal car raising/sloping.

Depending on the markets, the triggering of the alarm will activate the siren and the hazard warning lights (for about 26 seconds). The methods of operation and the number of cycles may vary depending on the versions/markets.

However a maximum number of cycles is foreseen.

Once the alarm cycle has come to an end, the system will return to its normal monitoring state.

INTERRUPTING THE ALARM

To interrupt the alarm press the button on the remote control or, if the remote control battery is down, get into the car, insert the key into the ignition switch and turn the key to **MAR**.

IMPORTANT If it is necessary for the vehicle to lie inactive for long periods (over 3 weeks), close the vehicle using the key to deactivate the alarm.

VOLUMETRIC PROTECTION

To guarantee correct operation all the windows and the sunroof, if any, should be closed.

This function can be excluded (for example when leaving animals on-board the car) by performing the following operations in quick succession: when the key is at **MAR**, move the key to the **STOP** position and then return the key to **MAR** and then once again to the **STOP** position. Remove the ignition key.

The led in the car will come on for about 2 seconds to confirm that the function has been excluded.

To restore volumetric protection move the ignition key to the **MAR** position and hold it in this position for more than 30 seconds.

If requiring to activate an electric control operated by the ignition key at **MAR** (e.g. electric windows) with the volumetric protection deactivated, turn the ignition key to **MAR**, operate the control and return the key to **STOP** within a maximum time of 30 seconds. This way volumetric protection is not restored.

Downloaded from www.Manualslib.com manuals search engine

CUTTING OUT OPERATION OF THE SIREN (for versions/markets where applicable)

When requiring to dispense with the siren acoustic signalling in the alarm condition, simply keep the remote control button (**B-fig. 10**) pressed for 4 seconds when engaging the system.

This condition is shown by a series of 5 beeps in quick succession after the normal acoustic/visual signals when the system is operated.

The next time the system is activated, normal operation of the siren is restored automatically.

MINISTERIAL HOMOLOGATION

In keeping with the laws in force in each country on the subject of radio frequency, we point out that:

— the separate homologation numbers for each market are given on the last pages of this handbook before the alphabetical index (for some countries also homologation document);

— for markets in which the transmitter needs to be marked with the homologation number, this has been stated on the component.

(Depending on the versions/markets, the code may also be marked on the transmitter and/or on the receiver).

REMOTE CONTROL DOOR LOCKING SYSTEM

The system comprises a receiver inside the car and a transmitter (remote control) incorporated in the key.

To lock/unlock the locks, point the transmitter towards the car, press and release the button (**B-fig. 11**).

IMPORTANT Should it be necessary to programme additional remote controls, contact Alfa Romeo Authorized Services.

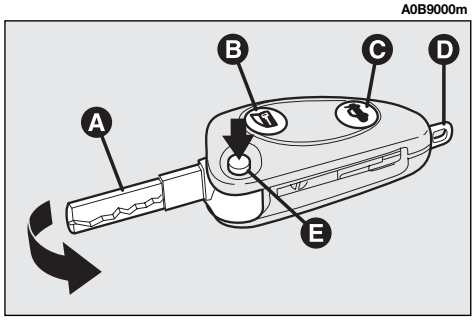

fig. 10

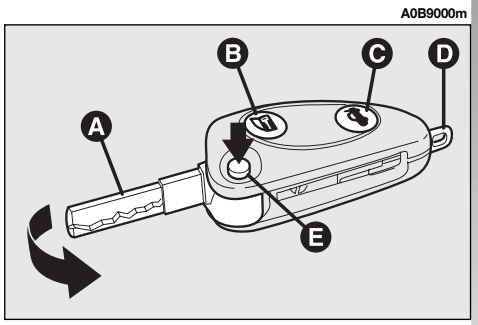

fig. 11

Downloaded from www.Manualslib.com manuals search engine

IGNITION DEVICE

THE SWITCH (fig. 12)

The key can be moved to one of four positions:

— **STOP**: engine switched off, key can be removed, engine lock engaged, steering lock engaged, all services excluded apart from those powered directly (e.g. hazard warning lights).

— **MAR**: drive position. The engine lock is deactivated and all electrical devices are powered.

IMPORTANT Never leave the key in this position when the engine is stationary.

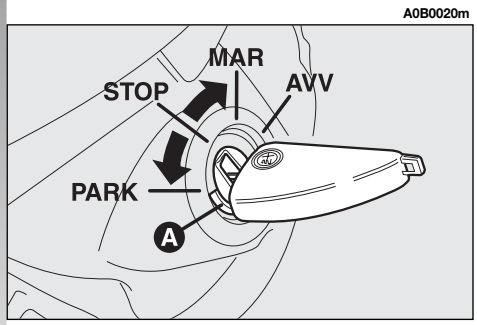

fig. 12

— **AVV**: unstable position for starting the engine.

IMPORTANT If the engine does not start, return the ignition key to the **STOP** position and repeat the sequence.

The ignition block is fitted with a safety device preventing it from being moved to the **AVV** position when the engine is already running.

— **PARK**: engine switched off, key can be removed, engine lock engaged, steering lock engaged, sidelights automatically switched on.

IMPORTANT To turn the key to the **PARK** position, button (**A**) located on the switch should be pressed first.

WARNING

When leaving the car always remove the key from the ignition to prevent any passenger in the car from inadvertently activating the controls. Never leave children unattended in the car. Remember to engage the handbrake and if the car is facing uphill, first gear and if the car is facing downhill, reverse.

If the ignition device is tampered with (for example during an attempted break-in) have it checked over by Alfa Romeo Authorized Services, before travelling again.

STEERING LOCK

Engaging lock:

— move the ignition key to the **STOP** or **PARK** position and remove the key lightly turning the steering wheel to facilitate the locking action.

Releasing the lock:

— turn the key to the **MAR** position and gently rock the steering wheel.

Downloaded from www.Manualslib.com manuals search engine

WARNING

Never remove the key with the car on the move. The steering wheel would lock automatically the first time the steering wheel is turned. This also occurs if the car is towed.

WARNING

It is absolutely forbidden to carry out whatever after-market operation involving steering system or steering column modifications (e.g.: installation of anti-theft device) that could badly affect performance and safety, cause the lapse of warranty and also result in non-compliance of the car with homologation requirements.

DOORS

WARNING

Before opening a door, ensure that this can be done safely.

OPENING/CLOSING FROM OUTSIDE

Front doors

— To open the driver's door turn the key clockwise and to open the passengers' door, optional for versions/markets where applicable, turn the key anti-clockwise, then remove the key and press the button (**A-fig. 13**).

— To close the door, turn the key in the opposite direction.

A0B0023m

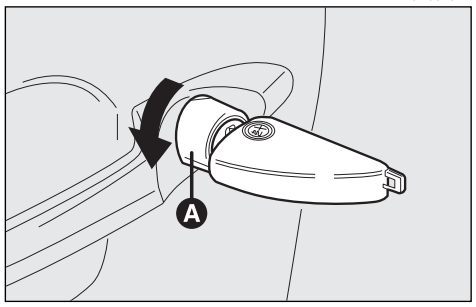

fig. 13

Rear doors

— To open the door, only with the inner knob (**A-fig. 14**) raised, pull the opening handle (**A-fig. 15**).

— To close, press the button (**A-fig. 14**) also with the door open, then close the door.

A0B0369m

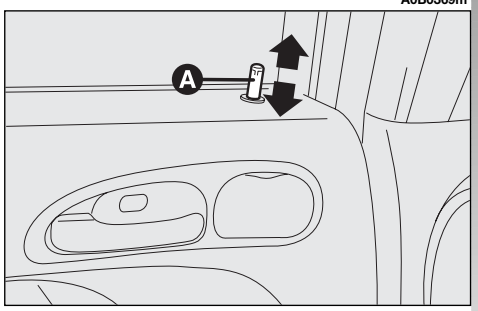

fig. 14

Downloaded from www.Manualslib.com manuals search engine

OPENING/CLOSING FROM INSIDE

Front doors

— To open the door pull the handle (**A-fig. 16**) regardless of the position of knob (**B**).

— To close the door pull the flap. To prevent the door from being opened from outside press knob (**B**).

Rear doors

WARNING

The rear doors can only be opened if the child safety lock has been released.

— To open the door pull handle (**A-fig. 17**).

— To close the door press the knob (**B**) even when the flap is open, and then close the flap.

Incorrect closing of one or more doors will turn on the symbol together with the relevant message on the Infocenter display.

CENTRALIZED LOCKING

This permits centralized locking of all doors, both front and rear.

To operate the centralized locking device the doors must be perfectly closed otherwise the system will not work.

For versions/markets, where applicable, central locking depends on the complete closing of all the doors and of the boot.

— **From outside:** when the doors are closed, insert and turn the key in the lock of one of the two front doors.

A0B0025m

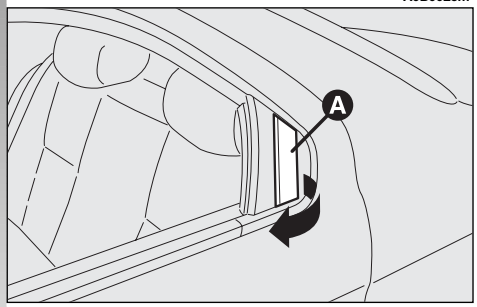

fig. 15

A0B0024m

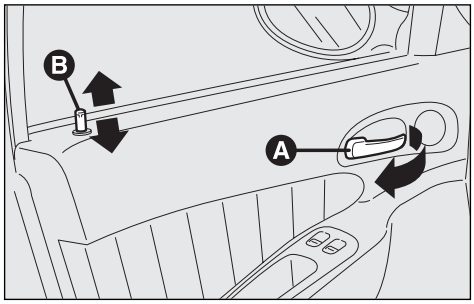

fig. 16

A0B0026m

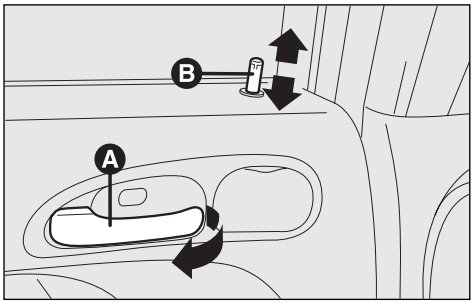

fig. 17

Downloaded from www.Manualslib.com manuals search engine

— **From inside:** when the doors are closed, press one of the knobs (**B-fig. 16**) located on the front doors, engage/release the centralized locking system.

By pressing the knob (**B-fig. 17**) on one of the rear doors only that particular door will be locked.

IMPORTANT For the front doors it is not possible to keep the knob (**B-fig. 16**) down if the door has not been shut properly.

IMPORTANT The centralized locking system can be deactivated, thus unlocking all doors, by lifting the door opening lever on one of the two front doors. If the power supply is interrupted (burnt fuse, battery disconnected, etc.) each door can be opened manually from both inside and outside the car.

IMPORTANT The intervention of the inertial fuel cut-off switch causes the automatic door unlock and inhibits door locking for about 30 seconds. After this time, door locking control unit operation is restored.

CHILD SAFETY LOCK

The rear doors are equipped with a special device (**fig. 18**) which prevents the door being opened from inside.

IMPORTANT Each device only acts on the door on which it is installed.

The device can only be engaged with the doors open, raising or lowering the control with the ignition key:

position 1 (control up) — device engaged (door locked);

position 2 (control down) — device released (door can be opened from inside).

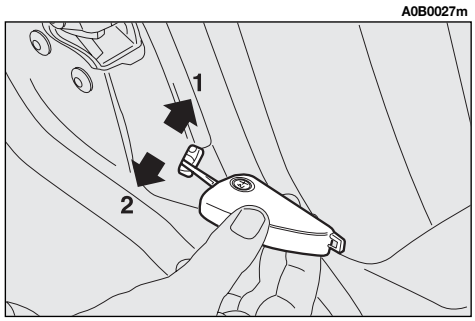

fig. 18

WARNING

Always use this device when carrying children.

WARNING

After activating the safety device check that it is working correctly by pulling on the inner lever used to open the door.

Downloaded from www.Manualslib.com manuals search engine

FRONT SEATS

WARNING

Adjustments may be made solely with the car stationary.

Fig. 19: sporty seats and lateral air bags.

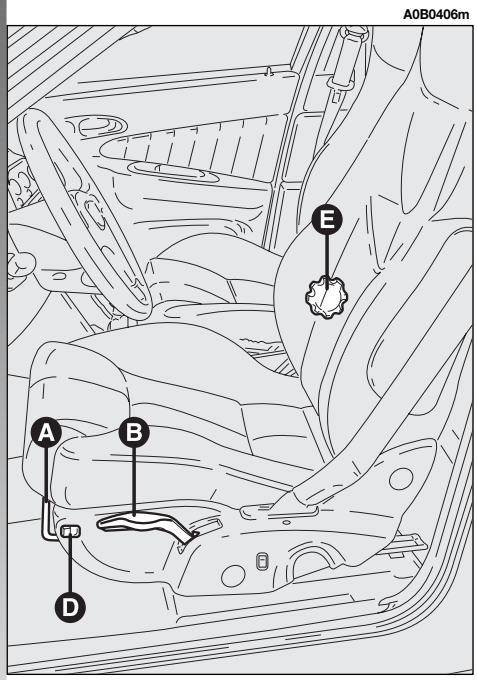

fig. 19

MOVING THE SEATS BACKWARDS OR FORWARDS

Lift lever (**A**) and push the seat backwards or forwards: in the driving position the arms should be slightly flexed and hands should rest on the rim of the steering wheel.

WARNING

Once you have let go off the lever, check that the seat is firmly locked in the runners by trying to move it back and forth. If the seat is not locked properly, in the case of collision it might move unexpectedly with clearly dangerous consequences.

ADJUSTING THE HEIGHT OF THE DRIVER'S SEAT

To raise the seat, pull the lever (**B**) taking it upwards, then continue operating the lever (up and down) until reaching the required height, then release the lever. To lower the seat, push the lever (**B**) downwards, then operate the lever (up and down) until reaching the height required.

IMPORTANT Adjustment must only be carried out when seated in the driver's seat.

ADJUSTING THE ANGLE OF THE BACKREST

Adjustment is of the electric type; use button (**D**) on the outer side of the seat to set the backrest in the required position.

LUMBAR ADJUSTMENT OF THE DRIVER'S SEAT (optional for versions/markets where applicable)

Adjustment is done by turning the knob (**E**) until reaching the most comfortable position.

Downloaded from www.Manualslib.com manuals search engine

SEAT WARMING (fig. 20)

The seat warming pad can be switched on and off using switch (**F**) on the outer side of the seat.

When the function is "on" the led on key (**F**) and the pilot lamp (**G**) are lit.

REAR POCKETS (fig. 21)

The front seats are provided with a pocket in the rear of the seat back.

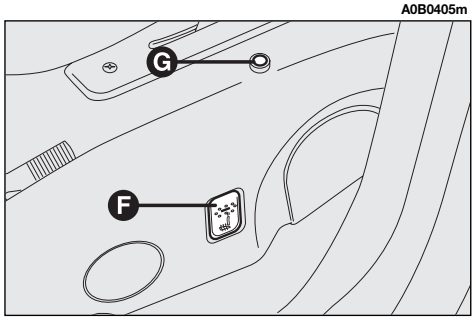

fig. 20

REAR SEAT

CENTRE ARMREST (fig. 22)

To use the centre armrest, lower it holding the grip (**A**) as illustrated.

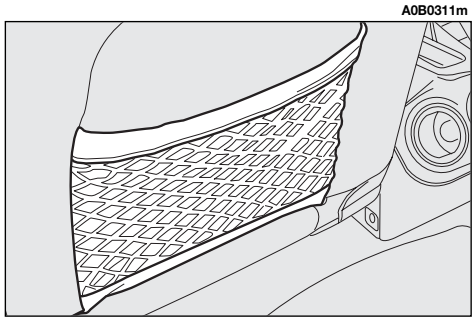

fig. 21

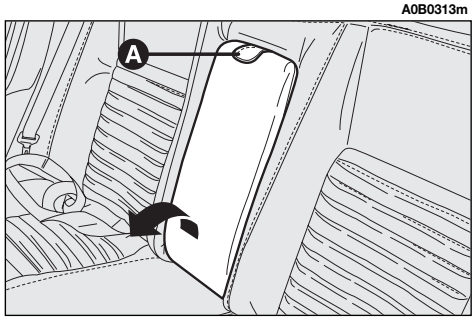

fig. 22

SKI COMPARTMENT (optional for versions/markets where applicable)

This compartment can be used for carrying long loads.

To gain access to this compartment, lower the armrest, pull the grip (**A-fig. 23**) of the lid and lower it onto the armrest (**fig. 24**).

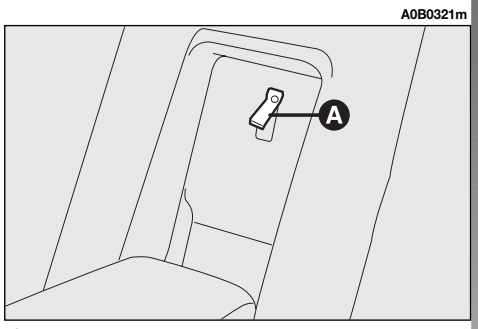

fig. 23

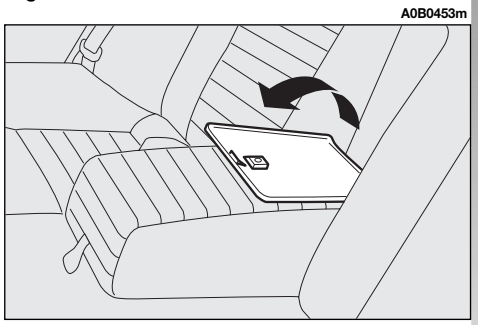

fig. 24

Downloaded from www.Manualslib.com manuals search engine

The compartment can be extended by removing the armrest: with the armrest lowered, press the two small handles (**B-fig. 25**) at the base of the armrest inwards and remove it. Then pull the grip of the lid and lower it onto the rear seat (**fig. 26**).

A0B00323m

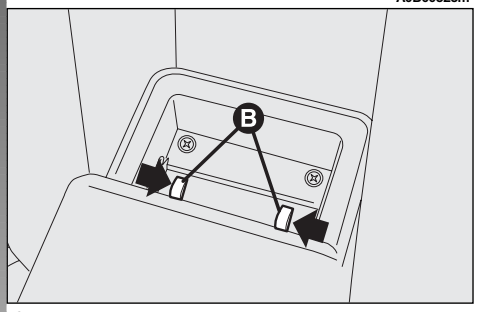

fig. 25

A0B0324m

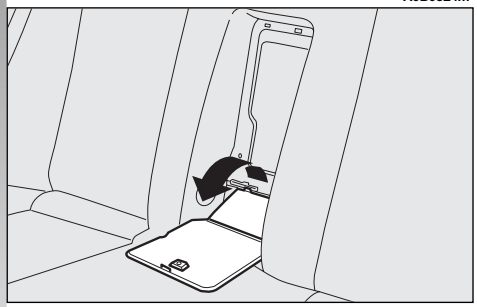

fig. 26

HEADREST

The car is fitted with two headrests for the side seats.

If necessary the headrests can be removed as follows:

— raise the headrest to the maximum height;

— press both buttons (**A** and **B-fig. 27**) and remove the headrests.

A0B0296m

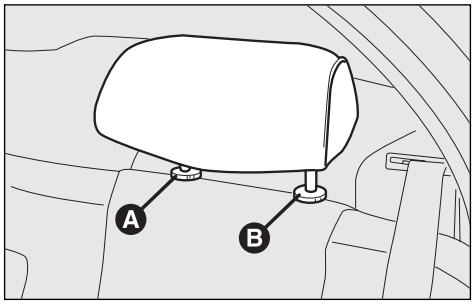

fig. 27

STEERING WHEEL ADJUSTMENT

The steering wheel position is adjustable and may be move nearer to or further away from the driver and also raised or lowered.

To do this, it is necessary to release lever (**A-fig. 28**) and pull it towards the steering wheel.

After setting the steering wheel in the most appropriate position, lock it pushing the lever fully home.

A0B0035m

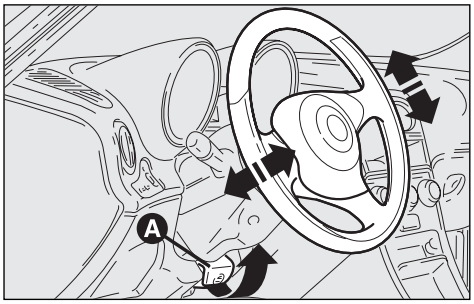

fig. 28

Downloaded from www.Manualslib.com manuals search engine

WARNING

The steering wheel position must only be adjusted with the car stationary.

WARNING

It is absolutely forbidden to carry out whatever after-market operation involving steering system or steering column modifications (e.g.: installation of anti-theft device) that could badly affect performance and safety, cause the lapse of warranty and also result in non-compliance of the car with homologation requirements.

ADJUSTING THE REAR-VIEW MIRRORS

INTERNAL REAR-VIEW MIRROR

The mirror, fitted with a safety device which releases it in the event of a violent impact can be moved to two positions: normal or anti-glare by operating lever (**A-fig. 29**).

DOOR MIRRORS

Electrically adjustable (fig. 30)

— Select the mirror to be adjusted (right or left) using switch (**A**):

— move switch (**A**) to (**B**) to adjust the left door mirror.

Move switch (**A**) to (**D**) to adjust the right door mirror.

— Then, reposition the switch (**A**) in the intermediate locking position (**C**).

IMPORTANT The mirror can only be adjusted electrically when the ignition key is in the **MAR** position.

A0B0022m

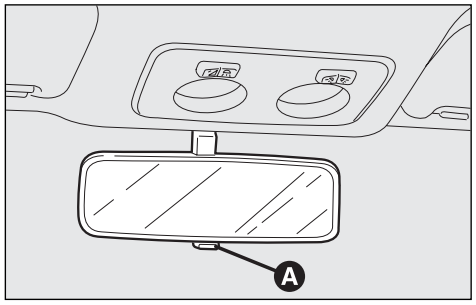

fig. 29

A0B0284m

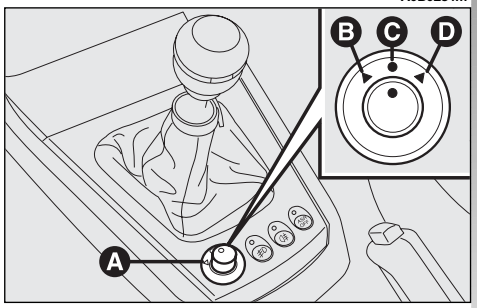

fig. 30

Downloaded from www.Manualslib.com manuals search engine

Folding (fig. 31)

— If necessary (for example when the size of the mirror causes difficulty in narrow spaces) the door mirror can be folded in towards the car from position (**A**) to position (**B**).

WARNING

When travelling the door mirrors must always be in position (A).

WARNING

As the driver's door mirror is curved, it may slightly alter the perception of distance.

A0B0370m

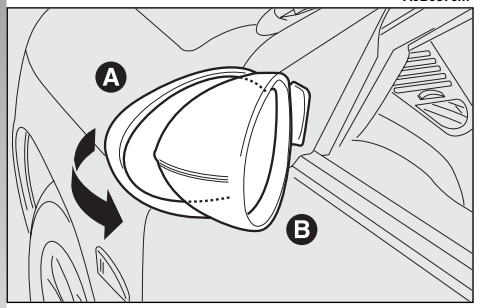

fig. 31

Defrosting/demisting (fig. 32)

The electric mirrors can be fitted with heating coils which are operated together with rearscreen heating pressing button (**A**) and prevent the mirrors from frosting and/or misting.

IMPORTANT This function is timed and is deactivated after a few minutes.

A0B0399m

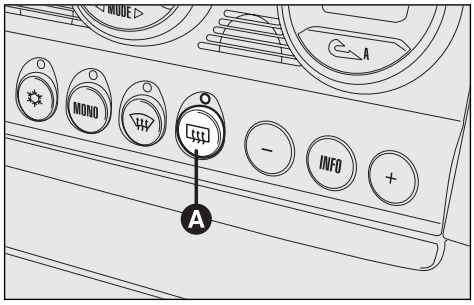

fig. 32

POWER WINDOWS

FRONT

IMPORTANT With ignition key at **STOP** windows can be opened manually for about max. 2 minutes or until opening one of the front doors.

Downloaded from www.Manualslib.com manuals search engine

Driver's (fig. 33-35)

The driver's door panel plate contains the buttons which, with the ignition key at **MAR**, operate the following windows:

A — left front window

B — right front window

C — left rear window (where fitted)

D — right rear window (where fitted)

E — rear door window control inhibitor (where fitted) (with the inhibitor activated the button is up, press again to re-enable the rear buttons).

IMPORTANT The driver's power window is fitted with a "continuous automatic operation" for both lowering and raising the window device. A brief press on the upper or lower part of the button will cause the window to move and continue its stroke automatically: the window stops in the position required by pressing either the upper or lower part of the button again.

Passenger's (fig. 34)

Button (**A**) is used to operate the passenger's window.

IMPORTANT The passenger's window is fitted with a device for "continuous automatic operation" only for lowering it. The device works as described for the driver's window.

REAR

The rear doors are fitted with power windows with split controls on driver's door (**C** and **D-fig. 35**) and on each rear door (**A-fig. 36**).

A0B0033m

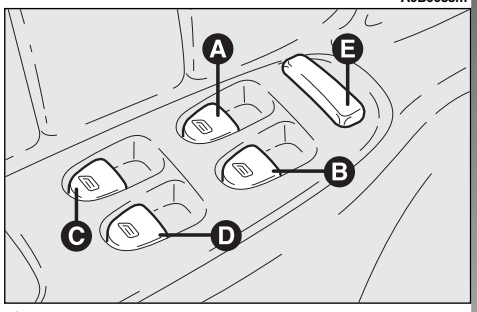

fig. 35

A0B0031m

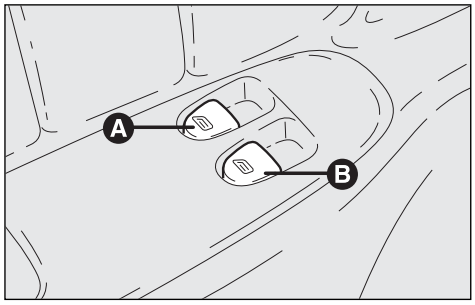

fig. 33

A0B0032m

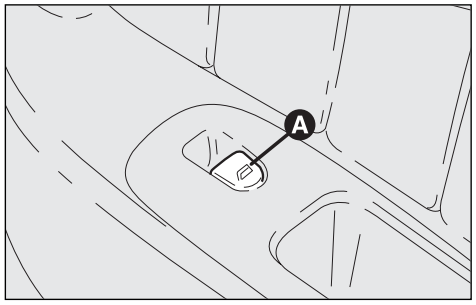

fig. 34

A0B0034m

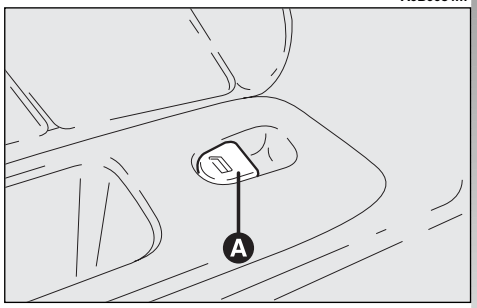

fig. 36

Downloaded from www.Manualslib.com manuals search engine

With the ignition key at **MAR**, press the button to lower the window; pull the button to raise it.

Do not hold the button down when the window is fully open or fully closed.

WARNING

Incorrect use of the power windows can be dangerous. Before and during operation of them always make sure that the passengers are not exposed to the risk of harm caused either directly by the windows in motion or by personal objects drawn or knocked by them.

WARNING

When leaving the car always remove the ignition key to prevent passengers (especially children) from being injured by the power windows inadvertently operated.

SEAT BELTS

USING THE SEAT BELTS

The belt should be worn keeping the chest straight and rested against the seat back.

Take hold the tongue (**A-fig. 37**) and insert it into the buckle (**B**), until hearing the locking click.

At removal, if it jams, let it rewind for a short stretch, then pull it out again without jerking.

A0B0325m

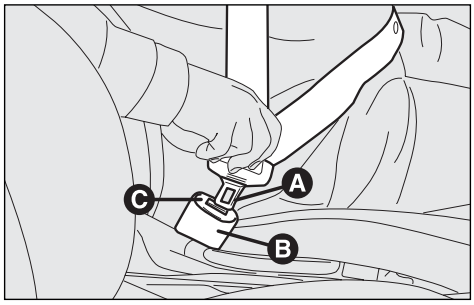

fig. 37

To unfasten the seat belts, press button (**C**). Guide the seat belt with your hand while it is rewinding, to prevent it from twisting.

WARNING

Never press button (C) when travelling.

Through the reel, the belt automatically adapts to the body of the passenger wearing it, allowing freedom of movement.

When the car is parked on a steep slope the reel mechanism may block; this is normal. The reel mechanism prevents the webbing coming out when it is jerked or if the car brakes sharply, in a collision or when cornering at high speed.

A0B0300m

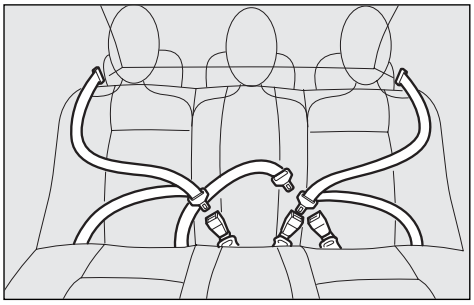

fig. 38

Downloaded from www.Manualslib.com manuals search engine

The rear seat is fitted with inertial seat belts with three anchor points with reel for the side seats and an abdominal belt with two anchor points for the centre (**A-fig. 38**) seat. On request for versions/markets where applicable, the centre seat, too, may be fitted with a headrest and inertial belt with three anchor points with reel like the two sides (**fig. 40**).

In order to ensure that the correct tabs, are fitted in the correct clips, the tabs of the side belts and the clip of the central belt (only abdominal) are incompatible (**fig. 39**).

WARNING

To offer the highest level of protection, the rear seat belts should be fastened as shown in fig. 38 and fig. 40.

WARNING

Proper backrest coupling is guaranteed when button (A-fig. 42) set near each handle (B) is retracted in the handle.

WARNING

Make sure the seat back is correctly hooked on both sides (not visible red buttons (A) to prevent seat back being thrown forwards and injuring passengers should you brake sharply.

A0B0301m

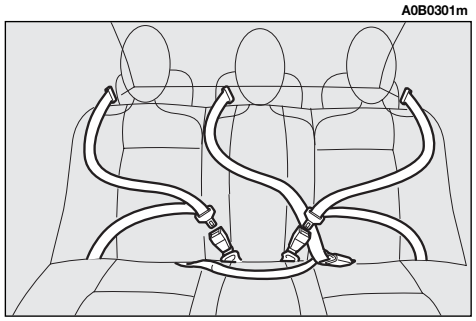

fig. 40

A0B0466m

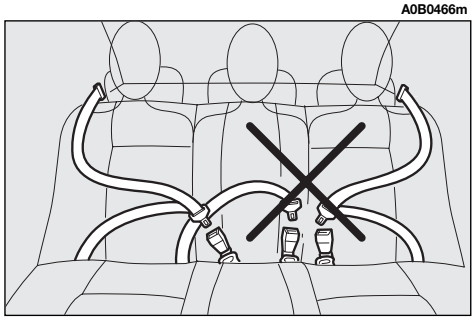

fig. 39

A0B0467m

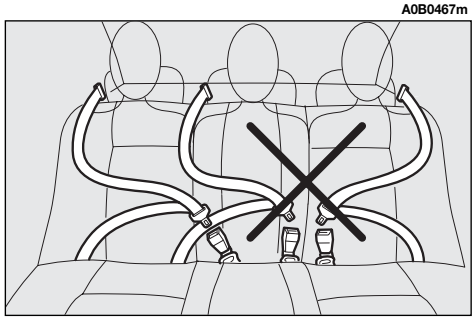

fig. 41

A0B0123m

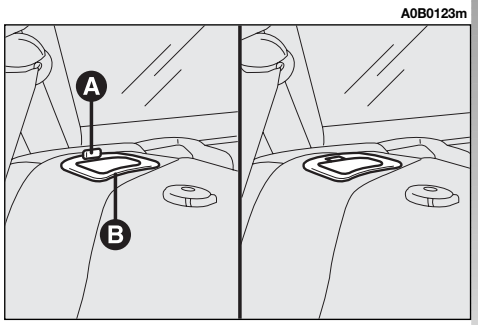

fig. 42

Downloaded from www.Manualslib.com manuals search engine

WARNING

Remember that, in the event of an accident, any passengers occupying the rear seats who are not wearing a seat belt not only subject themselves to great personal risk but constitute a danger to the occupants of the front seats.

WARNING

After tilting, when resetting the rear seat in straight position, take care to reposition the seat belt properly to have it ready for use.

When the rear seats are not occupied, use the proper pockets (**A-fig. 43**) on the backrest to stow the seat belt clips neatly, the tab (**B**) of the central abdominal belt shall be fitted into (**C**) (see next paragraph "Rear abdominal centre belt housing").

REAR CENTRAL ABDOMINAL BELT (fig. 44)

Fasten the belt by inserting the tab (**A**) into the clip (**B**), until a click is heard.

To adjust the belt, run the tape in the buckle (**D**) pulling the end (**E**) to tighten and part (**F**) to loosen.

Press button (**C**) to release the belt.

IMPORTANT The belt is adjusted properly when it fits closely across the hips.

REAR ABDOMINAL CENTRE BELT HOUSING (fig. 45)

When the rear centre belt, which is of the abdominal type, is not in use, hook the tongue (**A**) in the special support (**B**) on the rear seat back.

WARNING

Always hook the belt tip when it is not used to prevent it from hitting the occupants in the event of a crash.

A0B0118m

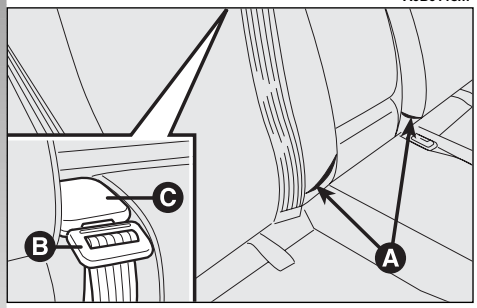

fig. 43

A0B0003m

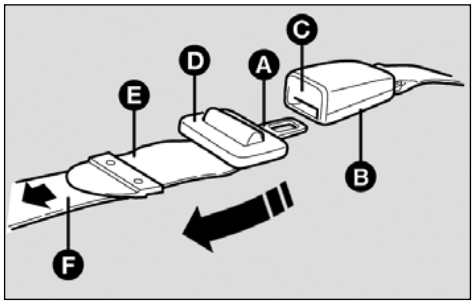

fig. 44

A0B0468m

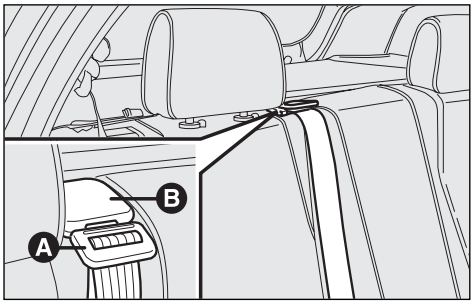

fig. 45

Downloaded from www.Manualslib.com manuals search engine

ADJUSTING THE HEIGHT OF FRONT AND REAR SIDE SEAT BELTS (Sportwagon versions only)

Always adjust the height of belts adapting them to the size of the person wearing them. This precaution will improve their effectiveness, substantially reducing the risk of injury in the event of a crash.

Correct adjustment is obtained when the belt passes about half way between the end of the shoulder and the neck.

To adjust the belt, use handle (**A-fig. 46**) (front seat belts) or (**A- fig. 47**) (rear side belts, Sportwagon versions only) as shown by the arrow and raise or lower the rocker ring (**B**) to the most suitable of the possible positions. After adjusting, release handle (**A**).

WARNING

After adjustment, always check that the slider (B) is anchored in one of the positions provided. To do this, with the button (A-fig. 46) or (A-fig. 47) released, exert a further pressure to allow the anchor device to catch if release did not take place at one of the preset positions.

WARNING

Make the height adjustment when the car is stationary.

A0B0029m

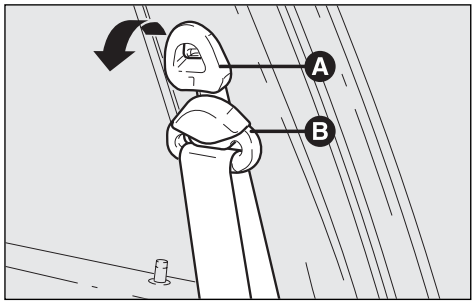

fig. 45

A0B0099m

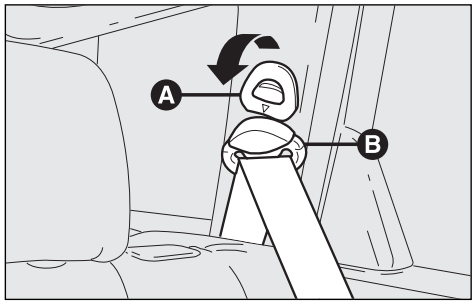

fig. 46

Downloaded from www.Manualslib.com manuals search engine

PRE-TENSIONING DEVICES

To increase the efficiency of the front seat belts, **Alfa 156 GTA** is fitted with pre-tensioning devices.

These devices "feel" that the car is being subject to a violent impact by way of a sensor rewind the seat belts a few centimetres. In this way they ensure that the seat belt adheres to the wearer before the restraining action begins.

The seat belt locks to indicate that the device has intervened; the seat belt cannot be drawn back up even when guiding it manually.

IMPORTANT The pretensioner will give maximum protection when the seat belt adheres snugly to wearer's chest and hips.

Front seat pretensioners activate only if front seat belts are properly fitted into buckles.

A small amount of smoke may be produced. This smoke is in no way toxic and presents no fire hazard.

The emergency tensioning retractor needs no maintenance or lubrication. Any modification to its original features will nullify the retractor's effectiveness. If, due to unusual natural events (floods, high waves, etc.), the device has been affected by water and mud, it must be replaced.

WARNING

The pretensioner can only be used once. After a collision that has triggered it, have it replaced at Alfa Romeo Authorized Service. The validity of the device is written on the plate located on the front left door near the lock. Contact Alfa Romeo Authorized Services to have pretensioner replaced as this date approaches.

Operations involving banging, vibrations or heating (above 100°C for a maximum of 6 hours) in the area of the pretensioners may damage or trigger off the device. Vibrations from rough road surfaces or accidental jolting caused by mounting pavements etc. do not have any effect on the pretensioner. If, however, you need assistance, go to Alfa Romeo Authorized Services.

Downloaded from www.Manualslib.com manuals search engine

WARNING

Never disassemble or tamper with the pretensioner components. All interventions must be carried out by qualified and authorised personnel. Always contact Alfa Romeo Authorized Services.

GENERAL INSTRUCTIONS FOR THE USE OF THE SEAT BELTS

All the occupants of the car are obliged to respect the local traffic laws regarding the wearing of seat belts.

Always fasten the seat belts before starting.

WARNING

To ensure the highest degree of protection, you are recommended to keep the seat backrest in the straightest position possible, and the belt adhering well to the chest and pelvis.
Seat belt should always be worn in both the front and rear positions! Travelling without seat belt increases the risk of serious injury or death in the case of accident.

WARNING

The seat belt must not be twisted and should cling tightly to the body. The upper part must pass over the shoulder and diagonally across the chest. The lower part must rest across the pelvis and not across the stomach to eliminate the risk of sliding forwards (fig. 48). Do not use devices (clips, stoppers, etc.) which keep the belts away from the body.

WARNING

Under no circumstances should the components of the seat belts and pretensioner be tampered with or removed. Any operation should be carried out by qualified and authorised personnel. Always contact an Alfa Romeo Authorized Service.

A0B0004m

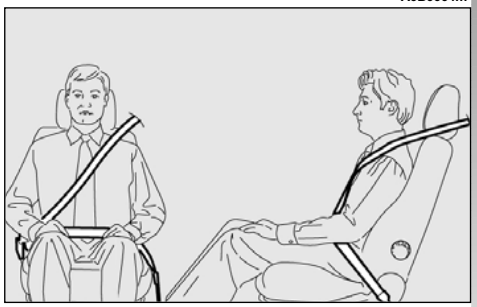

fig. 48

Downloaded from www.Manualslib.com manuals search engine

WARNING

If the seat belt has been subjected to shock, for example during an accident, it must be completely replaced together with the attachments and their screws, and the pretensioning devices, even if visible defects are not detected as the belt may have lost its resilience.

WARNING

Do not carry children on your knee using a single seat belt for both (fig. 49). Do not fasten other objects to the body.

Seat belts are also to be worn by expectant mothers: the risk of injury in the case of accident is greatly reduced for them and the unborn child if they are wearing a seat belt.

Pregnant women must of course position the lower part of the belt very low down so that it passes under the abdomen (**fig. 50**).

HOW TO KEEP THE SEAT BELTS ALWAYS IN EFFICIENT CONDITIONS

— Always use the belts with the tape well taut and never twisted; make sure that it is free to run without impediments.

— After a serious accident, replace the belt being worn at that time, even if it does not appear damaged. Always replace the seat belts if pretensioners have been activated.

— To clean the belts, wash by hand with neutral soap, rinse and leave to dry in the shade. Never use strong detergents, bleach or dyes or any other chemical substance that might weaken the fibres.

— Prevent the reels from getting wet: correct operation of them is only guaranteed if water does not get inside.

— Replace the seat belt if it shows significant wear or cut signs.

A0B0007m

fig. 49

A0B0008m

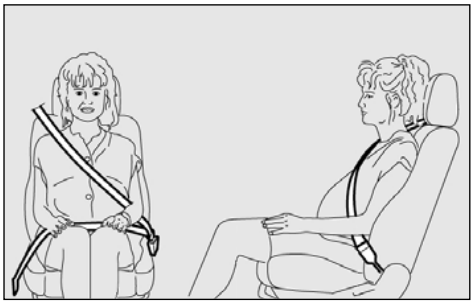

fig. 50

Downloaded from www.Manualslib.com manuals search engine

CARRYING CHILDREN SAFELY

WARNING

SERIOUS DANGER! ***Never place cradle child's seats on the front passenger seats of cars equipped with passenger air bag since the air bag activation could cause serious injuries, even mortal. You are advised to carry children always on the rear seat, as this is the most protected position in the case of a crash. In any case, child's seats must absolutely not be positioned on the front seat of car's with passenger's air bag, which during inflation could cause serious injury, even mortal, regardless of the seriousness of the crash that triggered it. Children may placed on the front seat of cars fitted with passenger's air bag deactivation. In this case, it is absolutely necessary to check the warning light on the check panel to make sure that deactivation has actually took place (see paragraph "Front and side air bags" at item "Front passenger air bag"). The front passenger seat shall be adjusted in the most backward position to prevent any contact between the child's seat and the dashboard.***

For the best level of protection in the event of a crash, all occupants must travel seated and secured by suitable restraint systems.

This is even more important for children.

According to 2003/20/EC Directive, this prescription is compulsory for all European Community countries.

Compared with adults, a child's head is proportionately larger and heavier than the rest of the body, while muscles and bone structure are not completely developed. Therefore, in order to restraint them correctly in the event of a crash, different systems are needed then adult seat belts.

A0B0001m

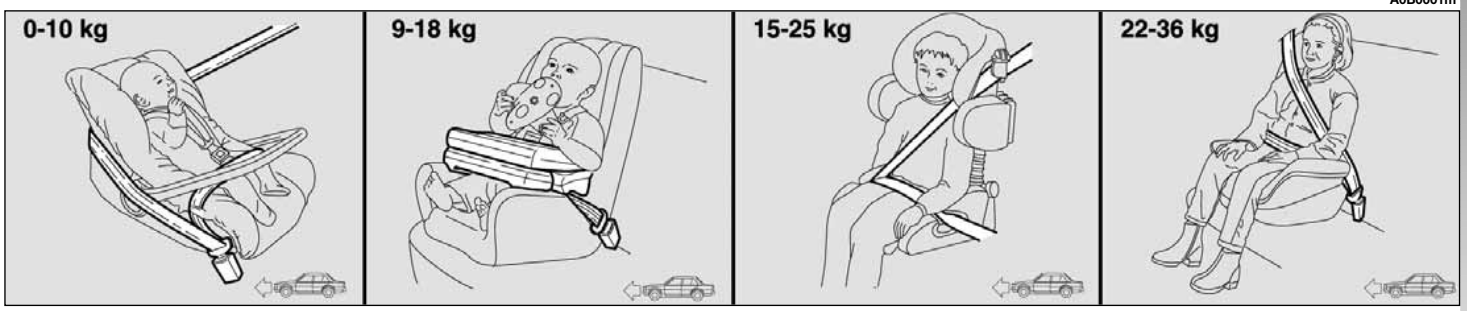

fig. 51

Downloaded from www.Manualslib.com manuals search engine

The results of research on the best protection for a child are summarised in European Standard ECE-R44, which in addition to making them compulsory, subdivides restraint systems into five groups:

Group 0	until 10 kg in weight
Group 0+	until 13 kg in weight
Group 1	9-18 kg in weight
Group 2	15-25 kg in weight
Group 3	22-36 kg in weight

As it may be noted, the groups partially overlap and in fact, in commerce it is possible to find devices that cover more than one weight group (**fig. 52**).

All the restraint devices must bear the homologation data, together with the control brand, on a solidly fixed label which must absolutely not be removed.

Over 1.50 m in height, from the point of view of restraint systems, children are considered as adults and wear belts normally.

The Lineaccessori Alfa Romeo includes seats for each weight group, which are the recommended choice because they have been designed and specifically experimented for Alfa Romeo cars.

GROUP 0 and 0+

Babies up to 13 kg must be carried facing behind (**fig. 52**) on a cradle seat, which, supporting the head, does not induce strain on the neck in the event of sharp deceleration.

The cradle is restrained by the car safety belts, as illustrated, and it should in turn restrain the child with the belts incorporated on it.

WARNING

The illustration is indicative only for assembly. Assemble the seat according to the compulsory instructions provided with it.

A0B0005m

fig. 52

GROUP 1

Starting from 9 kg to 18 kg in weight, children may be carried facing forwards with seats fitted with front cushion (**fig. 53**), through which the car seat belt restrains both child and seat.

WARNING

The illustration is indicative only for assembly. Assemble the seat according to the compulsory instructions provided with it.

A0B0006m

fig. 53

Downloaded from www.Manualslib.com manuals search engine

WARNING

Seats exist which are suitable for covering weight groups 0 and 1 with a rear connection to the car belts and its own belts to restrain the child. Because of their mass, they can be dangerous if installed incorrectly fastened to the car belts with a cushion. Strictly adhere to the assembly instructions provided.

GROUP 2

Starting from 15 to 25 kg in weight, children may be restrained directly by the car seat belts. Child seats only have the function of positioning the child correctly in relation to the belts, so that the diagonal part adheres to the chest and never to the neck and that the horizontal part adheres to the child's pelvis and not to the abdomen (**fig. 54**).

WARNING

The illustration is indicative only for assembly. Assemble the seat according to the compulsory instructions provided with it.

A0B0002m

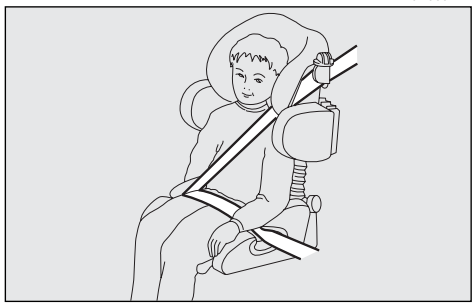

fig. 54

GROUP 3

For children from 22 kg up to 36 kg the child's chest is thick enough not to need the spacer back rest any more.

Fig. 55 shows proper child seat positioning on the rear seat.

Over 1.50 m tall children may wear seat belts like adults.

WARNING

The illustration is indicative only for assembly. Assemble the seat according to the compulsory instructions provided with it.

A0B0009m

fig. 55

Downloaded from www.Manualslib.com manuals search engine

PASSENGER SEAT COMPLIANCE WITH REGULATIONS ON CHILD'S SEAT USE

Alfa 156 GTA complies with the new EC Directive 2000/3 regulating child's seat assembling on the different car seats according to the following table:

Rear seat for saloon and Sportwagon versions

Group	Range of weight	SEAT			
		Front passenger	Rear side passenger seat	Rear centre passenger seat (inertial seat belt with three anchor points)	Rear centre passenger seat (centre lap belt with two anchor points)
Group 0,0+	0 - 13 kg	L	U	U	(*)
Group 1	9 -18 kg	L	U	U	(*)
Group 2	15 - 25 kg	L	U	U	(*)
Group 3	22 - 36 kg	L	U	U	(*)

Key:

U = suitable for child restraint systems of the "Universal" category, according to European Standard ECE-R44 for the specified "Groups"

L = suitable for certain child's restraint systems available at Lineaccessori Alfa Romeo for the specified group

(*) = child's seats cannot be installed on the rear centre seat with lap belt with two anchor points

Downloaded from www.Manualslib.com manuals search engine

Below is a summary of the safety rules to be observed when carrying children:

1) The recommended position for installing a child's seat is on the rear seat, as it is the most protected in the event of a crash.

WARNING

If a passenger's air bag is installed, children should never travel on the front seat.

2) If the passenger's air bag is deactivated always check that deactivation has taken place through the special warning light .

3) Carefully follow the instructions provided with the child's seat, which the supplier is obliged to attach. Keep them in the car together with the documents and this booklet. Do not use used seats without the instructions for use.

4) Always pull the tape to check that the belts are buckled.

5) All restraint systems are strictly for one child only: never use for two children at the same time.

6) Always make sure that the belts do not rest on the child's neck.

7) During the journey, do not allow the child to stay in abnormal positions or release the belts.

8) Do not carry children in your arms, not even small babies. No-one, however strong, can keep hold of them in a crash.

9) In the case of accidents, replace the child's seat with a new one.

PRESETTING FOR INSTALLING THE "ISOFIX TYPE" CHILD RESTRAINT SYSTEM

The car is created preset for mounting the Isofix type child restraint system. Isofix is a new European standardised system for carrying children. Isofix type child restraint system is an additional option that does not prevent from using traditional child restraint systems. type Isofix type child restraint system covers three weight groups: 0, 0+ and 1.

Due to its different anchoring system, the Isofix type child's seat should be anchored using only the proper brackets provided for the purpose in the car.

It is possible to mount both the traditional restraint system and the Isofix type one, one on the left and the other on the right, for example.

Since sizes are different, it is possible to install max two Isofix type child's seats using the proper couplings on the rear seat or three traditional child's seats using the seat belts. On the front passenger seat it is possible to mount only traditional child's seats.

Downloaded from www.Manualslib.com manuals search engine

The car is fitted (optional for versions/markets where applicable) with the Kiddy Isofix seat, certified according to European Standard ECE-R44/03 for babies up to 18 kg weight to be positioned facing the running direction and the seat for babies up to 13 kg weight to be positioned facing backwards (groups 0,0+ and 1).

We recommend to adopt these child's seats since they have been designed and experimented expressly for **Alfa 156 GTA**.

Isofix type child's seats are to be anchored to two metal brackets, set between the rear seat back and the cushion and that can be identified through the slots in the seat cover (**A-fig. 56**).

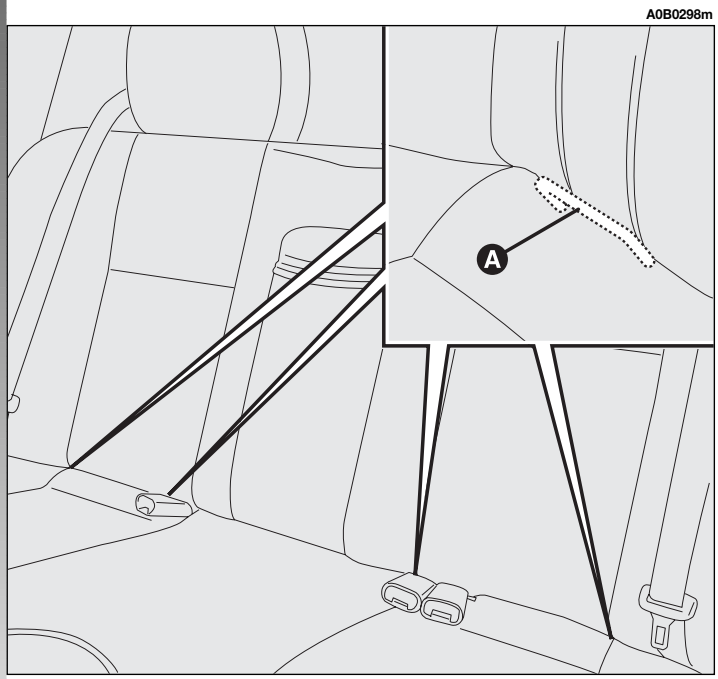

fig. 56

WARNING

Install the child restraint system only with the car stationary. The Isofix type child restraint system is properly anchored to the preset brackets when clicks are heard. In any case, keep to the installation instructions that must be provided by the child restraint system's Manufacturer.

If using Isofix type child's seats, remember that just those specifically designed, experimented and certifed for the car can be used.

Downloaded from www.Manualslib.com manuals search engine

Installation of the seat for the 0 and 0+ groups

For children of the **0**, **0+** weight group, the child's seat is facing backwards (babies up to 13 kg) and the child is restrained by the child's seat belts (**D-fig. 57**).

For proper installation proceed as follows:

— check whether the release lever (**B-fig. 57**) is at rest position (inward)

— find the presetting brackets (**A**), then position the child's seat with the fastening devices (**C**) aligned with the brackets

— push the child restraint system until hearing the locking clicks.

A0B0400m

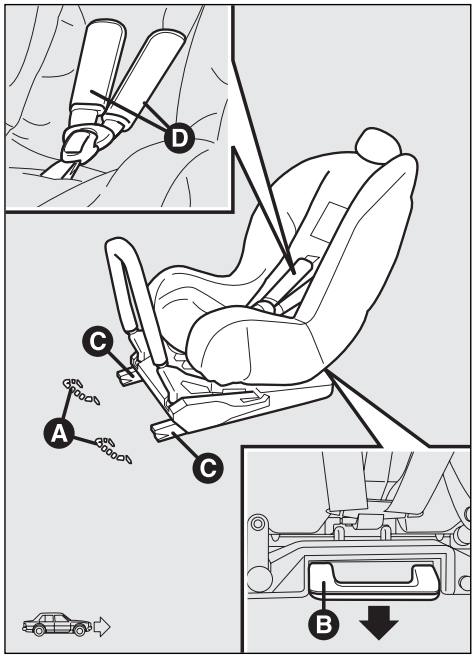

fig. 57

A0B0401m

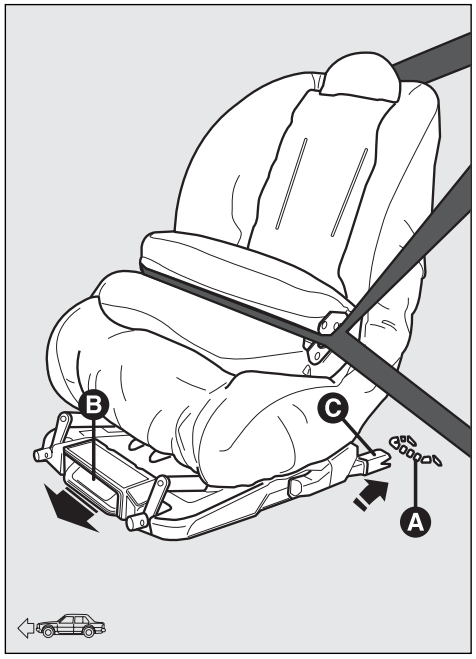

fig. 58

As the child grows up, passing to weight group **1** the child's seat should be mounted facing forwards (running direction).

Installation of the seat for weight group 1

For proper installation proceed as follows:

— check whether the release lever (**B-fig. 58**) is at rest position (inward)

— find the presetting brackets (**A**), then position the child's seat with the fastening devices (**C**) aligned with the brackets

— push the child restraint system until hearing the locking clicks.

If the Isofix type seat is positioned facing backwards, the passenger's seat must be positioned completely back until touching the child's seat back.

Downloaded from www.Manualslib.com manuals search engine

FRONT AND SIDE AIR BAGS

The car is fitted with front Air bags for the driver (**fig. 59**), for the passenger (**fig. 60**), side bags (**fig. 61**) and window bags (**fig. 62**).

FRONT AIR BAGS

Description and operation

The front air bag (driver's and passenger's) is a safety device that comes into action in the event of a head-on collision.

It is formed of an instantly-inflating cushion contained in a special recess:

— in the centre of the steering wheel for the driver;

— in the dashboard and with a larger-sized cushion for the passenger.

The front Air bag (driver's and passenger's) is a device designed to protect the occupants in the event of head-on collision of medium-high severity by the interposition of the cushion between the occupant and the steering wheel or dashboard.

In the event of a crash, the electronic control unit processes the signals leading from a deceleration sensor and when necessary, triggers inflation of the cushion.

A0B0396m

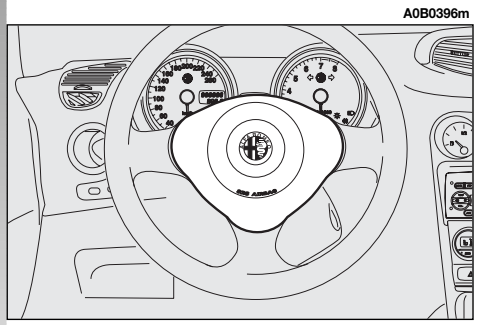

fig. 59

A0B0276m

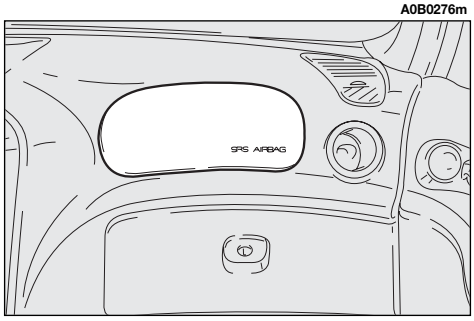

fig. 60

A0B0452m

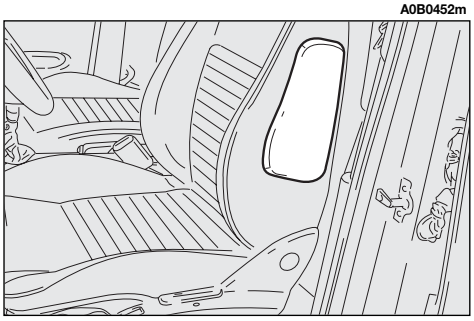

fig. 61

Downloaded from www.Manualslib.com manuals search engine

The cushion inflates instantly as a protective barrier between the occupants' bodies and the structures which could cause injury. The cushion deflates immediately afterwards.

The front air bag (driver's and passenger's) does not replace but is complementary to the use of belts, which should always be worn, as specified by law in Europe and most non-European countries.

In the event of a crash a person that is not wearing the seat belt moves forwards and may come into contact with the cushion while it is still opening. Under these circumstances the protection offered by the cushion is reduced.

Front air bags are designed to protect car's occupants in front crashes and therefore non-activation in other types of collisions (side collisions, rear-end shunts, roll-overs, etc. . .) is not a system malfunction.

In collisions against highly deformable or mobile objects (road signposts, heaps of ice or snow, etc.), rear collisions (hit from behind by another vehicle), side collisions, wedging under other vehicles or protective barriers (for example under a lorry or guard rail) cutting in of the air bag is not activated as it does not offer any more protection than the seat belts therefore activation would be inappropriate.

Therefore the failure to be triggered does not mean that the system is not working properly.

WARNING

Please don't apply stickers or other objects to the steering wheel, to the air-bag cover on the passenger's side or on the side roof lining to the upholstery on the roof side. Don't place objects on the dashboard passenger's side (such as mobile phones) because they could tamper with the correct opening of the passenger's air-bag and than cause serious injuries to the vehicle occupants.

A0B0277m

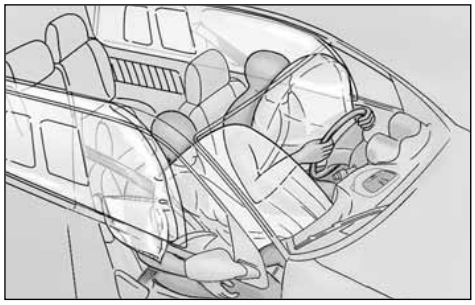

fig. 62

Downloaded from www.Manualslib.com manuals search engine

PASSENGER'S FRONT AIR BAG

The passenger's front air bag has been designed to improve the protection of a person wearing a seat belt.

Its volume at maximum inflation fills most of the space between the dashboard and the passenger.

ATTENTION

SERIOUS DANGER: The car is fitted with front passenger's air bag. Never place cradle child's seats on the front passenger seat of cars equipped with passenger air bag since the air bag activation could cause serious injuries, even mortal. In the case of need, always deactivate the passenger's air bag when a child's seat is placed on the front seat. The front passenger seat shall be adjusted in the most backward position to prevent any contact between child's seat and dashboard. Even if not ruled by law, for better protection of adults you are recommended to reactivate the air bag immediately as soon as child transport is no longer necessary.

MANUAL DEACTIVATION OF PASSENGER'S FRONT AIR BAG

Should it be absolutely necessary to carry a child on the front seat, the passenger's front air bag can be deactivated.

Deactivation/reactivation takes place with ignition key at **STOP** and operating it in the special key switch on the right-hand side of the dashboard (**fig. 63**). Access to the switch is only possible with the door open.

WARNING

Use the switch only with the engine off and the ignition key removed.

Downloaded from www.Manualslib.com manuals search engine

The key switch (**fig. 63**) has two positions:

1) Passenger's front Air bag active: (**ON** position ⊗) warning light on check panel off; it is absolutely prohibited to carry children on the front seat.

2) Passenger's front Air bag deactivated: (**OFF** position) warning light on check panel on; it is possible to carry children protected by special restraint systems on the front seat.

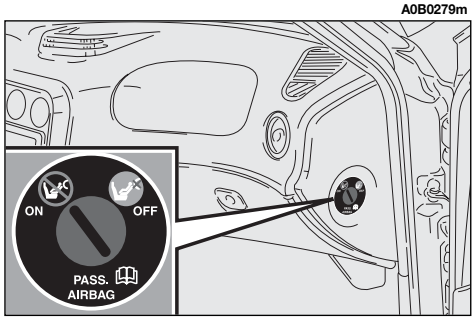

fig. 63

The warning light on the check panel glows steadily until the passenger's Air bag is reactivated.

Deactivation of the front passenger's air bag does not prevent operation of the side Air bag.

With the door open the key can be inserted and removed in both positions.

SIDE AIR BAGS (SIDE BAG - WINDOW BAG)

The side bag and window bag have the task of increasing protection of the occupants in the event of a side crash of medium-high severity.

They are formed of an instantaneously-inflating cushion:

— the side bag is housed in the back rest of the front seats; with this solution it is always possible to have the cushion in the optimum position in relation to the passenger, regardless of the adjustment of the seat;

— the window bags, which are "curtain" cushions, are housed in the side roof lining covered by a special trim, which makes it possible to extend the cushion downwards. This solution, designed to protect the head, makes it possible to offer the highest degree of protection to the front and rear occupants in the event of side crash, thanks to the wide cushion inflation surface.

In the event of a side crash, an electronic control unit processes the signals leading from a deceleration sensor and activates, when necessary, inflation of the bags.

Downloaded from www.Manualslib.com manuals search engine

The bags inflate instantaneously, setting themselves between the body of the front passengers and the car door. The bags deflate immediately afterwards.

In the event of minor side crashes (for which the restraining action of the seat belts is sufficient), the air bags are not deployed. Also in this case it is of vital importance to wear the seat belts since in case of side crash they guarantee proper positioning of the occupant and prevent the occupant to be pitched out of the car in case of violent crashes.

Therefore the side air bags do not replace but are complementary to the use of belts, which you are recommended to always wear, as specified by law in Europe and most non-European countries.

Operation of the side air bags and window bags is not disabled by the front air bag deactivation switch, as described in the previous paragraphs.

IMPORTANT In the event of side crash, you can obtain the best protection by the system keeping a correct position on the seat, thus allowing correct window bag unfolding.

WARNING

Never rest head, arms and elbows on the door, on the windows and in the window bag area to prevent possible injuries during the inflation phase.

IMPORTANT The front and/or side air bags may be activated if the car is subjected to heavy shocks or accidents that involve the underbody area, such as for example violent bumps against steps, pavements or fixed obstacles on the ground, falling into big holes or bumpy roads.

IMPORTANT The triggering of air bags releases a small amount of powder. This powder is not harmful and does not indicate a start of fire; also the surfaces of the deployed bag and the car interior may be covered with dusty residue: this may irritate the skin and eyes. In the event of exposure, wash with neutral soap and water.

WARNING

Never lean head, arms and elbows out of the window.

The airbag system has a validity of 14 years for the pyrotechnic charge and 10 years for the coil contact (see the plate located on the front left door near the lock). Contact Alfa Romeo Authorized Services for replacement as these dates approach.

Downloaded from www.Manualslib.com manuals search engine

IMPORTANT If an accident has triggered the air bag, Alfa Romeo Authorized Services must be contacted to have the devices activated replaced and to have the whole system checked.

All operations involving checking, repairing and replacing components concerning the Air bag must be carried out by Alfa Romeo Authorized Services.

If the car is to be demolished, Alfa Romeo Authorized Services should be contacted beforehand to have the system deactivated.

If the car changes ownership, the new owner must be informed of the instructions for use and of the above warnings and be given this "Owner's Manual".

IMPORTANT The triggering of the pretensioners, front air bags and side bags is decided by the electronic control unit in a differentiated manner depending on the type of crash. The failure to trigger one or more of them does not necessarily indicate a system malfunction.

GENERAL CAUTIONS

WARNING

If the warning light does not turn on when turning the ignition key to MAR or if it stays on when travelling, this could indicate a failure in safety retaining systems; under this condition air bags or pretensioners could not trigger in the event of collision or, in a restricted number of cases, they could trigger accidentally. Stop the car and contact Alfa Romeo Authorized Services to have the system checked immediately.

WARNING

Do not cover the back rest of front seats with trims or covers there are not set for the use of side bags.

WARNING

Never travel with objects on your lap, in front of the chest or with a pipe, pencil, etc. between your lips. Serious injury may result in the case of the air bag being triggered.

WARNING

Always keep your hands on the steering wheel rim when driving, so that if the Air bag is triggered, it can inflate without meeting any obstacles. Do not drive with the body bent forwards, keep the seat back rest in the erect position and lean your back well against it.

WARNING

If the car has been stolen or an attempt to steal it has been made, if it has been subjected to vandals or floods, have the Air bag system checked by Alfa Romeo Authorized Services.

Downloaded from www.Manualslib.com manuals search engine

WARNING

You are reminded that when the ignition key is engaged and in the MAR position, the Air bags can be triggered also on a stationary vehicle, if it is bumped by another moving vehicle. Therefore, even with the car stationary, never allow children on the front seat. You are also reminded that with the car stationary, without the key engaged and turned, the Air bags are not triggered in the event of an impact; in this case the failure to trigger the air bags should not be considered a system failure.

WARNING

Turning the ignition key to MAR the warning light (with the passenger's front Air bag deactivation switch at ON) turns on for about 4 seconds, and then flashes for another 4 seconds to remind that the passenger's Air bag and corresponding side Air bags will be activated in the event of a crash, then it goes off.

WARNING

Do not wash the seat back with pressurised water or steam (by hand or at automatic seat washing stations).

WARNING

The front Air bags are designed to be triggered for heavier crashes than the pretensioners. It is therefore normal for the pretensioners only to be triggered for crashes within the two activation thresholds.

WARNING

Do not hook rigid objects to the coat hooks and to the support handles.

WARNING

The air bag does not replace the seat belts, but increases their effectiveness. Additionally, as the front air bags are not triggered for head-on collision at low speed, side crashes, crashes from behind or overturning, in these cases the occupants are protected only by the seat belts, which must, therefore, always be fastened.

Downloaded from www.Manualslib.com manuals search engine

STEERING WHEEL LEVERS

The devices and services controlled by the levers on the steering wheel can only be activated when the ignition key is in the **MAR** position.

LEFT-HAND LEVER

The left-hand lever controls the external lights except the foglamps and the rear foglight.

When the external lights are switched on the various controls located on the dashboard are illuminated.

The sidelights will come on if the ignition key is in the **PARK** position, regardless of the position of the knurled ring.

Lights switched off (fig. 64)

When the pointer on the knurled ring is opposite the symbol **O**, the external lights are switched off.

Sidelights (fig. 65)

The sidelights are switched on by turning the knurled ring from **O** to ☼.

The warning light on the instrument panel will come on at the same time.

Dipped-beam headlights (fig. 66)

These are switched on by turning the knurled ring from ☼ to .

A0B0371m

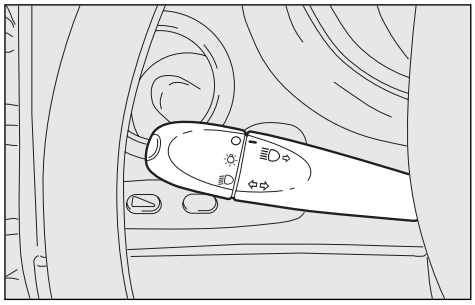

fig. 64

A0B0372m

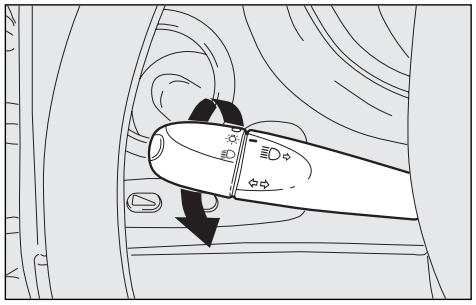

fig. 65

A0B0373m

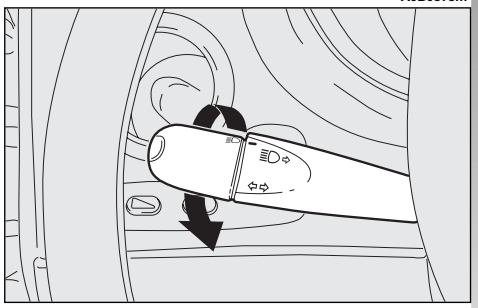

fig. 66

Downloaded from www.Manualslib.com manuals search engine

Main-beam headlights (fig. 67)

When the knurled ring is in the position, the headlights can be changed from dipped-beam to main-beam by pushing the lever towards the dashboard (stable position). The warning light will come on on the instrument panel.

To return from main-beam to dipped-beam, once again pull the lever towards the steering wheel and then release.

Flashing (fig. 68)

The headlights are flashed by pulling the lever towards the steering wheel (unstable position) regardless of the position of the knurled ring. The warning light on the instrument panel will come on at the same time.

IMPORTANT Only the main-beam lights are flashed. To avoid penalties, follow local regulations.

Direction indicators (fig. 69)

Moving the lever to the stable position will:

up - engage the right-hand direction indicators.

down - engage the left-hand direction indicators.

One of the warning lights (⬅ or ➡) will come on on the instrument panel at the same time.

The lever is returned to its home position automatically and the indicators are switched off when the steering wheel is straightened.

IMPORTANT If you wish to signal a rapid change of direction involving only a minimum movement of the steering wheel, the lever can be moved up or down without clicking (unstable position). When released the lever will return to its home position.

A0B0374m

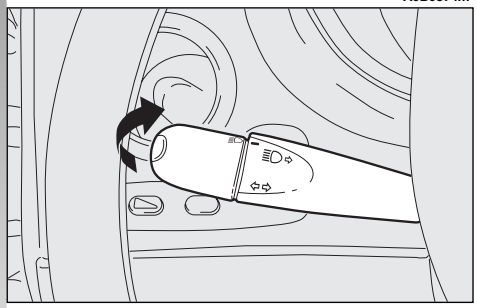

fig. 67

A0B0375m

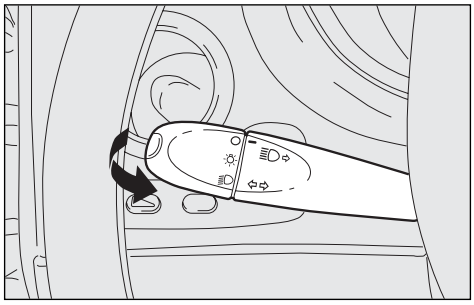

fig. 68

A0B0376m

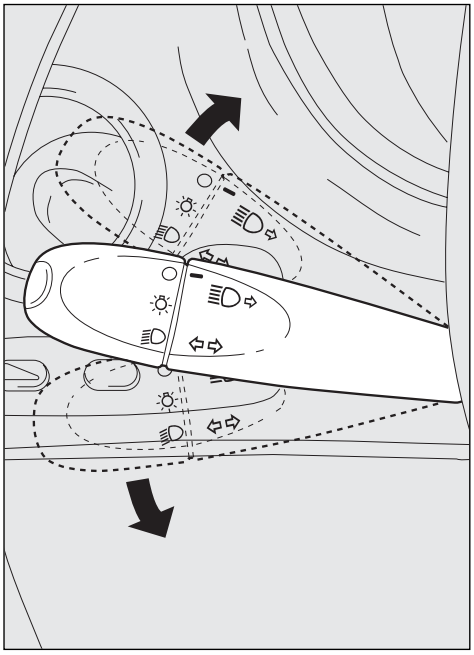

fig. 69

Downloaded from www.Manualslib.com manuals search engine

RIGHT-HAND LEVER

The right-hand lever is used to operate the windscreen wiper and windscreen washer. The control used to activate the windscreen washers also activates the headlights washers, if fitted.

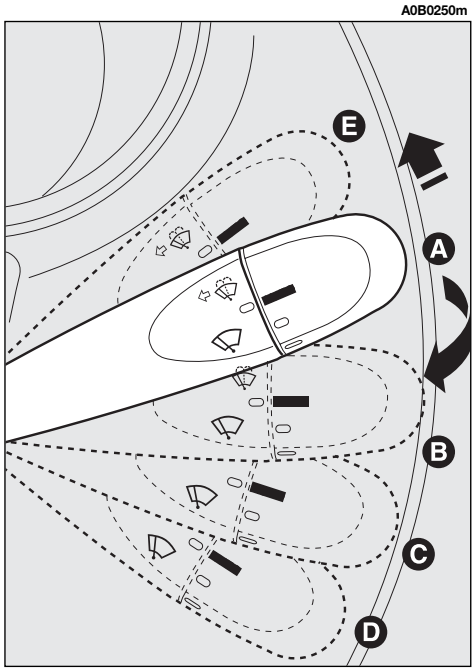

fig. 70

Windscreen wiper - windscreen washer (fig. 70-71)

The lever can be moved to five different positions corresponding to:

A - Stationary (off).

B - Intermittent.

With the lever in position (**B**), turning the ring (**F**) four possible intermittent speeds are obtained:

▬ = intermittent slow.

▬▬ = intermittent medium.

▬▬▬ = intermittent medium-fast.

▬▬▬▬ = intermittent fast.

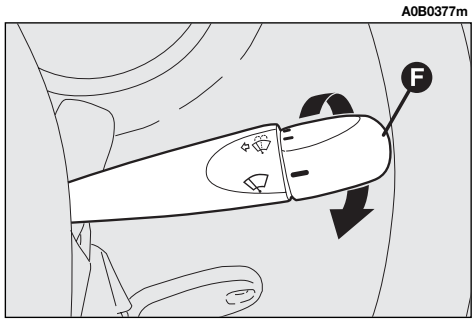

fig. 71

C - Continuous, slow.

D - Continuous, fast.

E - Fast, temporary (unstable position).

Operation in position (**E**) is limited to the time the lever is held in this position. When the lever is released, it returns to position (**A**) automatically stopping the wiper.

Downloaded from www.Manualslib.com manuals search engine

"INTELLIGENT WASHING" FUNCTION **(fig. 72)**

Pulling the lever towards the steering wheel (unstable position) operates the windscreen washer.

Keeping the lever pulled, with only one movement it is possible to operate the washer jet and the wiper at the same time; indeed, the latter comes into action automatically if the lever is pulled for more than half a second.

The wiper stops working a few strokes after releasing the lever; a further "cleaning stroke" after a few seconds completes the wiping operation.

Rain sensor (fig. 73)

The rain sensor (**A**), is an electronic device combined with the windscreen wiper which has the purpose of automatically adjusting the number of wipes during intermittent operation, to intensity of the rain.

All the other functions controlled by the right-hand lever remain unchanged.

The rain sensor is activated automatically moving the right-hand lever to position (**B-fig. 70**) and it has a range of adjustment that gradually varies between wiper stationary (no wiping) when the windscreen is dry, to wiper at first continuous speed (continuous, slow) with heavy rain.

Turn ring (**F-fig. 71**) to set the rain sensor sensitivity level:

AUTO = automatic sensitivity setting.
▬ = low sensitivity
▬▬ = medium sensitivity
▬▬▬ = high sensitivity.

Operating the windscreen washer with the rain sensor activated (lever at position **B**) the normal washing cycle is performed at the end of which the rain sensor resumes its normal automatic function.

Turning the ignition key to **STOP** the rain sensor is deactivated and the next time the engine is started (**MAR** position) it will not be reactivated even if the lever has remained in position (**B**). In this case to activate the rain sensor, simply move the lever to (**A**) or (**C**) and then back to (**B**).

A0B0378m

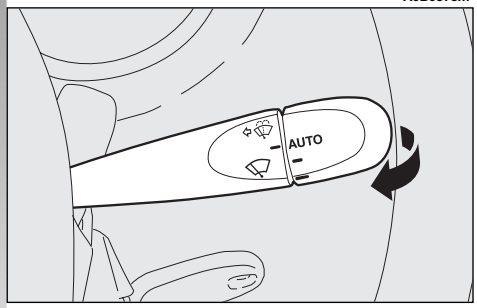

fig. 72

A0B0012m

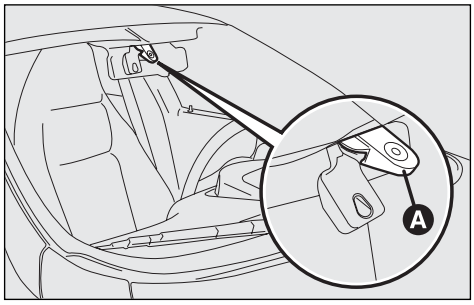

fig. 73

Downloaded from www.Manualslib.com manuals search engine

When the rain sensor is reactivated, the wiper performs one stroke, even if the windscreen is dry, to indicate that reactivation has occurred.

IMPORTANT In case of failure of the right-hand stroke or rain sensor, windscreen wiper operation with the right-hand lever at (**B**) shall take place in intermittent mode.

The rain sensor is located behind the inner rear-view mirror in contact with the windscreen and inside the area cleaned by the wiper and it controls an electronic control unit which in turns controls the wiper motor.

At each start, the rain sensor automatically stabilises at a temperature of about 40°C to eliminate any condensation from the control surface and prevent the formation of ice.

The rain sensor is able to detect and automatically adapt to the presence of the following particular conditions which require different sensitivity:

— impurities on the control surface (salt, dirt, etc.);

— streaks of water caused by worn wiper blades;

— difference between day and night (the human eye is more disturbed during the night by the wet glass surface).

Headlight washers (fig. 74)

These are operated when the sidelights are on and the windscreen washer is switched on.

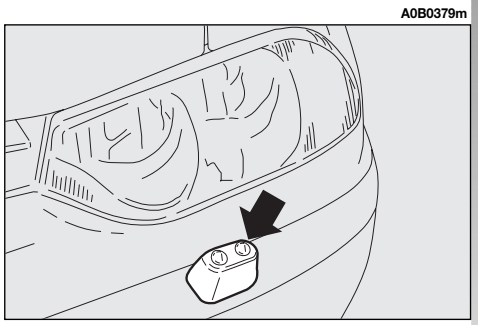

fig. 74

Downloaded from www.Manualslib.com manuals search engine

CRUISE CONTROL
(optional for versions/markets where applicable)

GENERAL

The speed regulator (**CRUISE CONTROL**), with electronic control, makes it possible to drive the car at the required speed without pressing the accelerator pedal. This reduces driving fatigue on motorways, especially during long journeys because the speed memorised is automatically maintained.

IMPORTANT The device can only be engaged at speeds above 30 km/h.

The device may only be engaged in the 4th or 5th gear. Travelling downhill with the device engaged, the car speed may increase more than the memorised one, due to the change in the engine load.

The device is disengaged automatically in any one of the following cases:

— pressing the brake pedal;

— pressing the clutch pedal;

— if the ASR system cuts in;

— with Selespeed transmission if a gear is changed;

— if car speed is below the set limit;

— if operating the gear lever without pressing the clutch pedal.

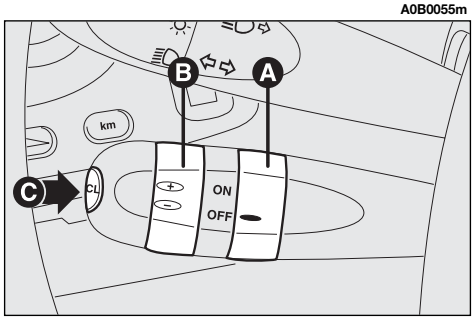

fig. 75

CONTROLS (fig. 75)

Cruise Control is controlled by the **ON/OFF** knurled ring (**A**), by the **+/–** ring (**B**) and by the **RCL** button (**C**).

Ring (**A**) has two positions:

— **OFF**: in this position the device is deactivated;

— **ON**: is the normal operating position of the device: the warning light on the check panel turns on.

Ring (**B**) serves for memorising and maintaining the car speed or for increasing or lowering the speed memorised.

Turn the ring (**B**) to (**+**) to memorise the speed reached or increase the speed memorised.

Turn the ring (**B**) to (**–**) to lower the speed memorised.

Each time the ring is actuated (**B**) the speed increases or lowers by about 1 km/h.

Keeping the ring turned the speed changes continuously. The new speed reached will be maintained automatically.

The **RCL** button (**C**) resets the memorised speed.

Downloaded from www.Manualslib.com manuals search engine

IMPORTANT Turning the ignition key to **STOP** or the ring (**A**) to **OFF**, the speed memorised is cleared and the system is switched off.

The ring (**A**) can be constantly left to **ON** without damaging the device. However, we suggest to disconnect the device when it is not used, turning the ring to **OFF**, to avoid fortuitous speed memorisations.

TO MEMORISE THE SPEED

Move the ring (**A**) to **ON** and take the car to the required speed normally. Turn the ring (**B**) to (**+**) for at least three seconds, then release it. The car speed is memorised and it is therefore possible to release the accelerator pedal.

The car will continue to travel at the memorised constant speed until one of the following condition takes place:

— pressing the brake pedal;

— pressing the clutch pedal;

— if the ASR system cuts in;

— with Selespeed transmission if a gear is changed.

IMPORTANT In the case of need (when overtaking for instance) acceleration is possible simply pressing the accelerator pedal; later, releasing the accelerator pedal, the car will return to the speed memorised previously.

TO RESET THE MEMORISED SPEED

If the device has been disengaged for example pressing the brake or clutch pedal, the memorised speed can be reset as follows:

— accelerate gradually until reaching a speed approaching the one memorised;

— engage the gear selected at the time of speed memorising (4th or 5th speed);

— press the **RCL** button (**C**).

Downloaded from www.Manualslib.com manuals search engine

TO INCREASE THE MEMORISED SPEED

The speed memorised can be increased in two ways:

1) pressing the accelerator and then memorising the new speed reached (turning the ring (**B**) for more than three seconds);

or

2) momentaneously turning the ring (**B**) to (**+**): each pulse of the ring will correspond to a slight increase in speed (about 1 km/h) while pressing continuously will correspond to a continuous speed increase. Releasing the ring (**B**) the new speed will be memorised automatically.

TO REDUCE THE MEMORISED SPEED

The speed memorised can be reduced in two ways:

1) disengaging the device (for instance pressing the brake pedal) and then memorising the new speed (turning the ring (**B**) to (**+**) for at least three seconds);

2) keeping the ring pressed (**B**) at (**–**) until reaching the new speed which will be memorised automatically.

RESETTING THE MEMORISED SPEED

The memorised speed is automatically reset turning off the engine or moving the ring (**A**) to **OFF**.

WARNING

When travelling with the cruise control on, do not move the gearshift lever to neutral.

WARNING

The cruise control may only be engaged at speeds above 30 km/h.

WARNING

It is advisable to engage the cruise control only when the conditions of the traffic or road so permit under completely safe conditions: i.e.: straight and dry roads, dual carriageways or motorways, flowing traffic and smooth road surface. Do not engage the device in town or in heavy traffic conditions.

WARNING

If the device is faulty or not working, turn the ring (A) to OFF and contact Alfa Romeo Authorized Services after checking that the protection fuse is intact.

Downloaded from www.Manualslib.com manuals search engine

DASHBOARD

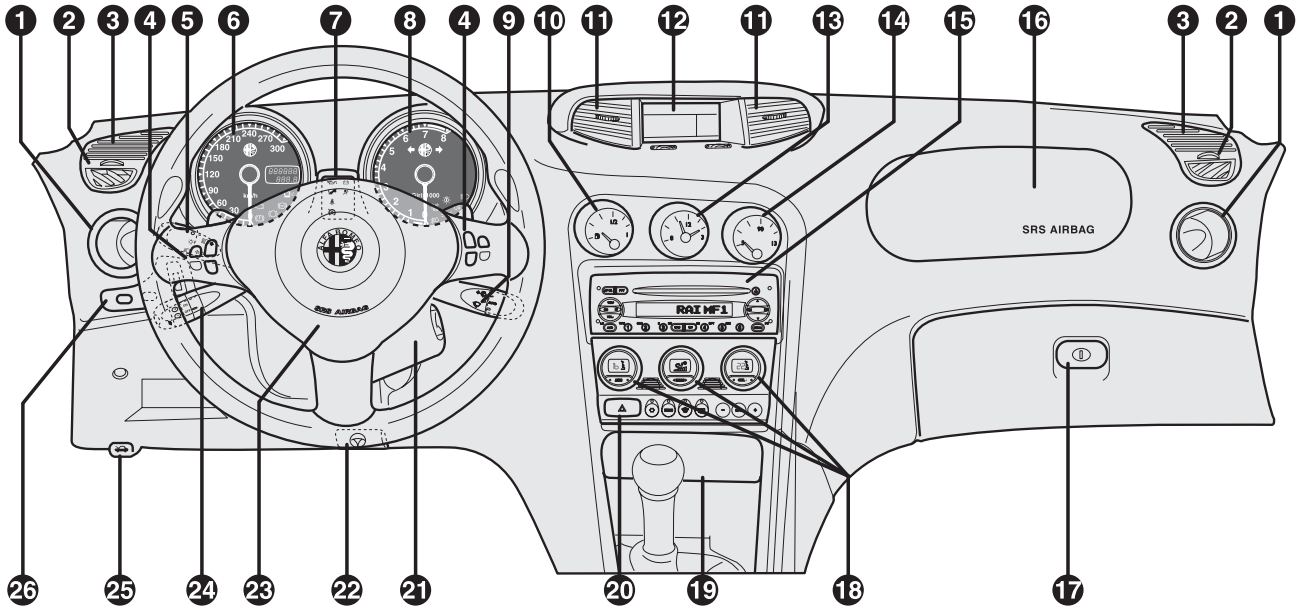

fig. 76

1. Side air outlets - **2.** Defrosting/demisting vents for side windows - **3.** Upper side vents - **4.** Radio controls on the steering wheel (where applicable) - **5.** Outside lights control lever - **6.** Speedometer (mileage recorder) - **7.** Check panel - **8.** Rev counter - **9.** Windscreen wiper control lever - **10.** Fuel level gauge - **11.** Centre air vents - **12.** Infocenter Display - **13.** Clock - **14.** Engine coolant temperature gauge - **15.** Sound system - **16.** Passenger's Air bag - **17.** Glove box - **18.** Controls for heating, ventilation and climate control - **19.** Ashtray and cigar lighter - **20.** Hazard warning lights switch - **21.** Ignition switch - **22.** Steering wheel lock/release lever - **23.** Driver's Air bag and horns - **24.** Cruise Control control lever (if provided) - **25.** Bonnet opening lever - **26.** Set of controls: instrument panel lighting adjustment, trip meter reset and headlamp aiming device

Downloaded from www.Manualslib.com manuals search engine

A0B0282m

INSTRUMENT CLUSTER

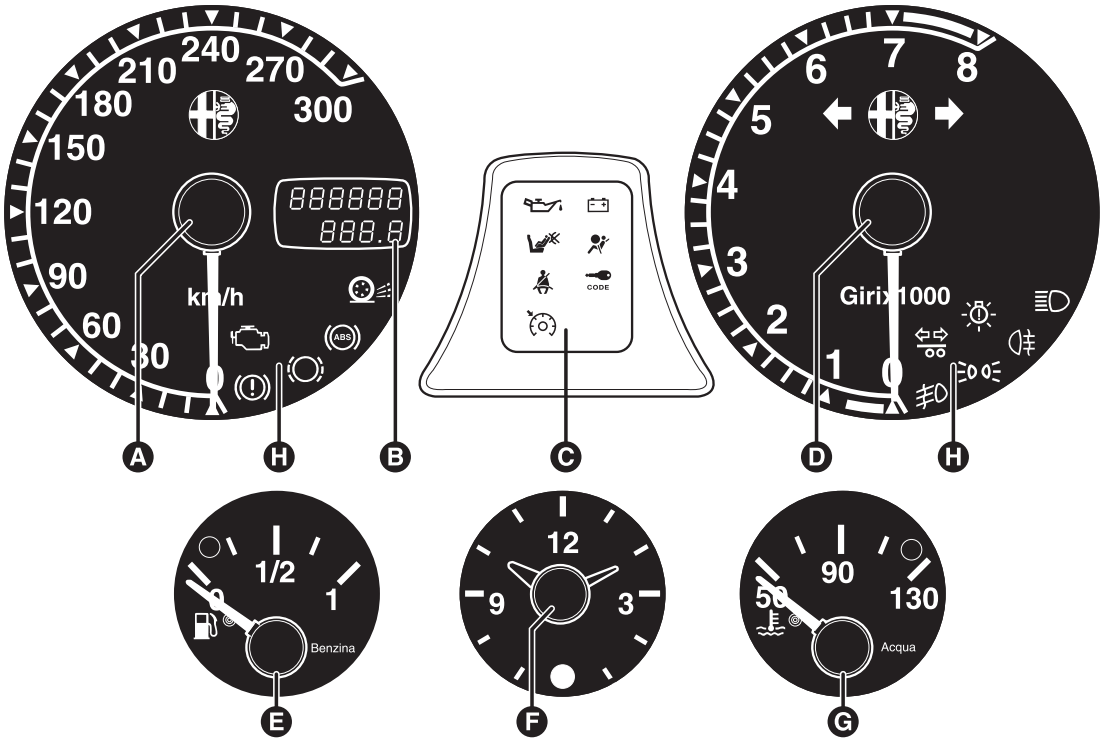

fig. 77

A. Speedometer (mileage recorder) - **B.** Odometer with double counter (total and partial) display - **C.** Check panel - **D.** Rev counter - **E.** Fuel level gauge with reserve warning light - **F.** Clock - **G.** Engine coolant temperature gauge with maximum temperature warning light - **H.** Warning lights.

Downloaded from www.Manualslib.com manuals search engine

REV COUNTER

The danger zone (red) indicates excessive high engine revs. Do not drive for long periods with the pointer in this area.

IMPORTANT The electronic injection control system gradually shuts off the flow of fuel when the engine is "over-revving" resulting in a gradual loss of engine power.

The rev counter may, when the engine is idling, indicate gradual or sudden increase of engine revs as the case may be; such behaviour is normal and must not be interpreted as a faulty condition as it occurs during normal operation, for instance when climate control or electric fan are switched on. In particular, slow revs variation helps keep the battery charged.

FUEL GAUGE AND RESERVE IMPORTANT LIGHT

This shows the amount of fuel left in the fuel tank.

This warning light ● comes on to indicate that approximately 7 litres of fuel are left in the tank.

IMPORTANT Under certain conditions (heavy slopes, for instance), the reading on the gauge may differ from the actual amount of fuel in the tank and changes in level may be indicated late.

This condition falls within the operation logics of the electronic control circuit to avoid highly unstable readings due to swaying of the fuel when travelling.

IMPORTANT Refuelling shall always be performed with engine off and ignition key to **STOP**. If the engine is off but the key is to **MAR**, a wrong fuel level could temporarily be indicated. This is due to the internal system control logic and cannot be considered as a system malfunctioning.

ENGINE COOLANT TEMPERATURE GAUGE AND MAXIMUM TEMPERATURE IMPORTANT LIGHT

This shows the temperature of the engine coolant fluid and begins when the fluid temperature exceeds approx. 50°C.

The pointer should normally be towards the middle of the scale. If the pointer reaches the higher temperature values of the scale (red area), the request for vehicle performance should be decreased.

The illumination of the ● warning light (together with the message shown by the Infocenter display) indicates an excessive temperature of the engine cooling fluid. In this case, stop the car and contact Alfa Romeo Authorized Services.

IMPORTANT The temperature of the engine coolant may rise towards the maximum values (red) when the vehicle is driven at low speeds, especially when the ambient air temperature is high. In this case, the vehicle should be stopped and the engine switched off for a few minutes after which the journey can be resumed, preferably at a higher speed.

Downloaded from www.Manualslib.com manuals search engine

ODOMETER (with double counter display)

The display shows:

— the mileage on the first line (6 figures)

— the trip meter (4 figures) and the outside temperature (where applicable) on the second line.

To reset the trip meter, keep the button (**A-fig. 78**) pressed for a few seconds.

INFOCENTER DISPLAY RHEOSTAT LIGHTS ADJUSTMENT

This function makes it possible to adjust the brightness (dimming/brightening) of the Infocenter display during night and day.

To perform the desired brightness adjustment (night or day), use buttons ⊕ or ⊖, bearing in mind that:

— if the outside lights are on, the message BRIGHTN. ADJUST. NIGHT will appear on the display (**fig. 79**)

— if the outside lights are off, the message BRIGHTN. ADJUST. DAY will appear on the display (**fig. 80**).

Pressing button INFO, or after about 5 seconds from last operation performed, returns to previous screen.

IMPORTANT During failure indication displaying, brightness cannot be adjusted since under these conditions the display gets automatically to max. brightness.

A0B0489m

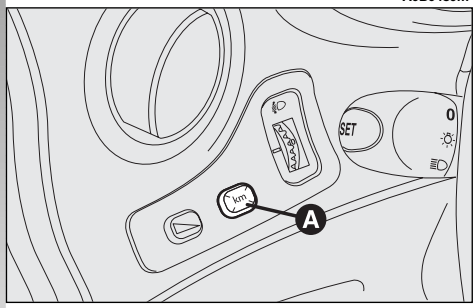

fig. 78

A0B2008g

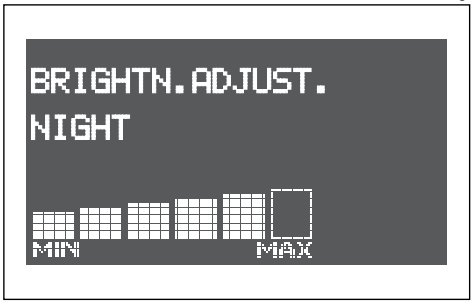

fig. 79

A0B2007g

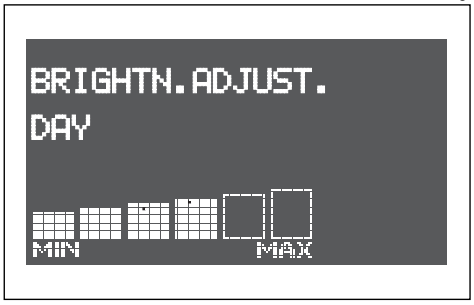

fig. 80

Downloaded from www.Manualslib.com manuals search engine

INFOCENTER DISPLAY

The Infocenter display is able to display all the useful and necessary information during driving, in particular:

INFORMATION AVAILABLE
ON STANDARD SCREEN

— Date (**A-fig. 81**)

— Outside temperature (**B-fig. 81**)

— Last item recalled from the Trip computer (e.g. Average velocity **C-fig. 81**) or engine oil temperature

— Warning message display with respective symbols (e.g. icy roads **D- fig. 81**).

The standard screen will remain on until a function is activated which requires being shown on the display (e.g. "Infocenter display rheostat lights adjustment").

INFORMATION ABOUT
VEHICLE CONDITION (for each event)

— Scheduled maintenance programme expiry

— Trip computer information

— Rheostat brightness adjustment.

Moreover, a menu is available which allows the driver to perform, by operating the control buttons (see "Control buttons" in the next pages) the following controls and settings:

A0B2107g

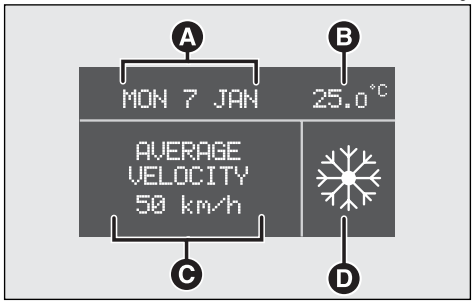

fig. 81

Downloaded from www.Manualslib.com manuals search engine

Set-up menu

SPEED LIMIT

– Switching on/off the relevant signal (ON/OFF)
– Speed limit setting

TRIP B ON/OFF

– Switching on/off the relevant function (ON/OFF)

DATE SETTING/TIME SETTING

– Day setting
– Month setting
– Year setting
– Hour setting
– Minute setting

LANGUAGE SELECTION

– Setting the language for the messages shown on the display

UNITS SELECTION

– Selection of the following units: km or mi (miles), °C or °F, l/100 km or km/l

IMPORTANT/FAILURE BUZZER VOLUME SETTING

– Volume setting of warning/failure buzzer

"WINTER" TYRES SPEED LIMIT

– Switching on/off the relevant function (ON/OFF)
– Setting the limit speed value among the available ones (160 km/h, 190 km/h or 210 km/h)

PROGRAMMED MAINTENANCE

– Displaying the expiry date of the next car service check (strictly related to the Programmed Maintenance Schedule)

DISPLAY CONTRAST ADJUSTMENT

– Infocenter display graphics contrast setting (dimming/brightening)

"DEFAULT" VALUES RESET

– Switching on/off the relevant function (ON/OFF)

EXIT MENU

– Exiting the menu

IMPORTANT The use of polarized glasses may reduce Infocenter display readability.

Downloaded from www.Manualslib.com manuals search engine

CONTROL BUTTONS (fig. 82-83)

To make use of the information that the Infocenter display (with the key in the **MAR** position) is able to provide, you should first get familiar with the relevant control buttons (placed on the central console aside the climate control/ventilation controls and on top of the left lever for the Trip computer function) and use them in accordance with the descriptions below. It is also recommended that you read over this chapter before performing any operation.

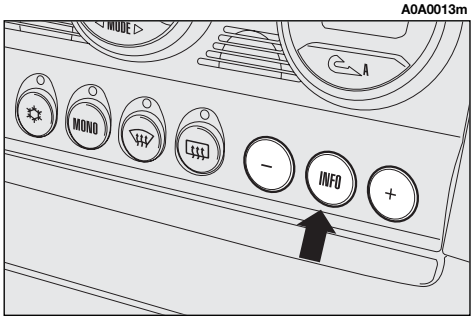

fig. 82

INFO, ⊕ , ⊖ buttons

⊕ Depending on the cases: to scroll the menu screens and their respective options upwards or to increase the displayed value

INFO
- A single press for less than 2 seconds (pulse), shown by INFO 1 in the following screens, to confirm the desired option and/or switch to the next screen or access the menu
- A single press for more than 2 seconds, shown by INFO 2 in the following screens, to confirm the desired option and return to the previous screen

⊖ Depending on the cases: to scroll the menu screens and their respective options downwards or to decrease the displayed value

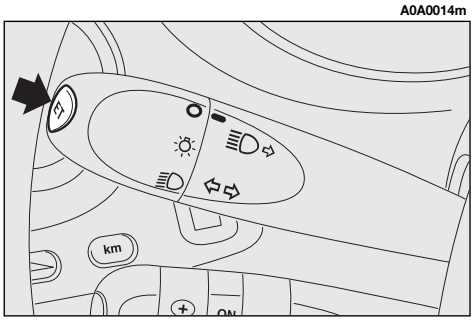

fig. 83

SET button

SET
- A single press for less than 2 seconds (pulse), shown by SET 1 in the following screens, to scroll the different Trip computer information screens
- A single press for more than 2 seconds, shown by SET 2 in the following screens, to reset the Trip computer information (reset) and initiate a new mission

Downloaded from www.Manualslib.com manuals search engine

MENU DESCRIPTION

The menu is made up of a set of functions arranged in a "circular fashion", which can be selected by means of buttons ⊕ and ⊖, for access to the different select operations and settings (see the examples "LANGUAGE" and "DATE" in the table below); for further details, also refer to "Access to the menu screen" in the following pages.

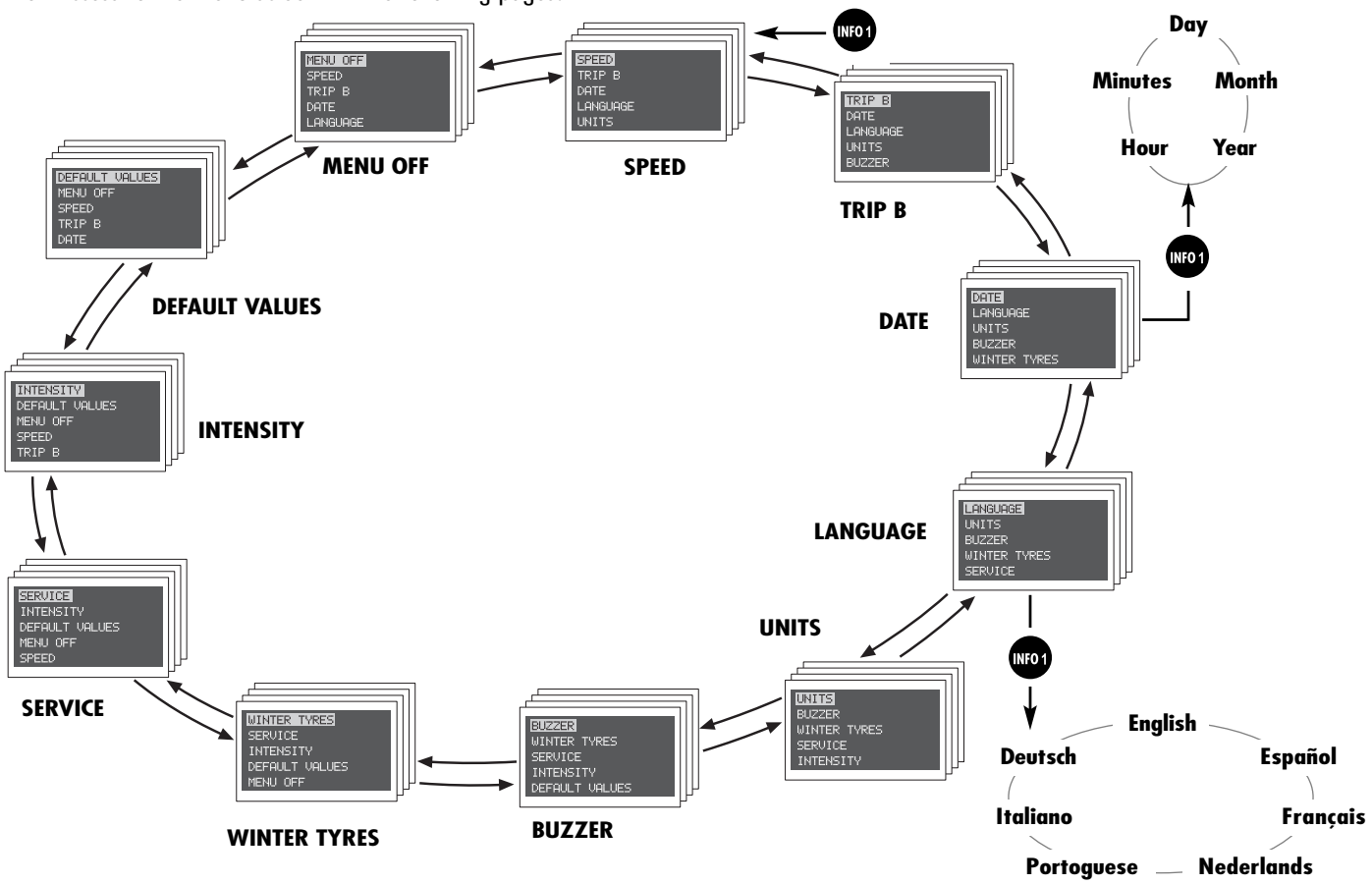

Downloaded from www.Manualslib.com manuals search engine

INITIAL CHECK

By turning the ignition key to the **MAR** position, the Infocenter display will show the message CHECK ACTIVE: this indicates the start of the diagnosis phase for all the electronic systems available on the vehicle; this phase lasts a few seconds. If, during this phase, no anomaly is found and after the engine has been started, the display will show the message CHECK OK.

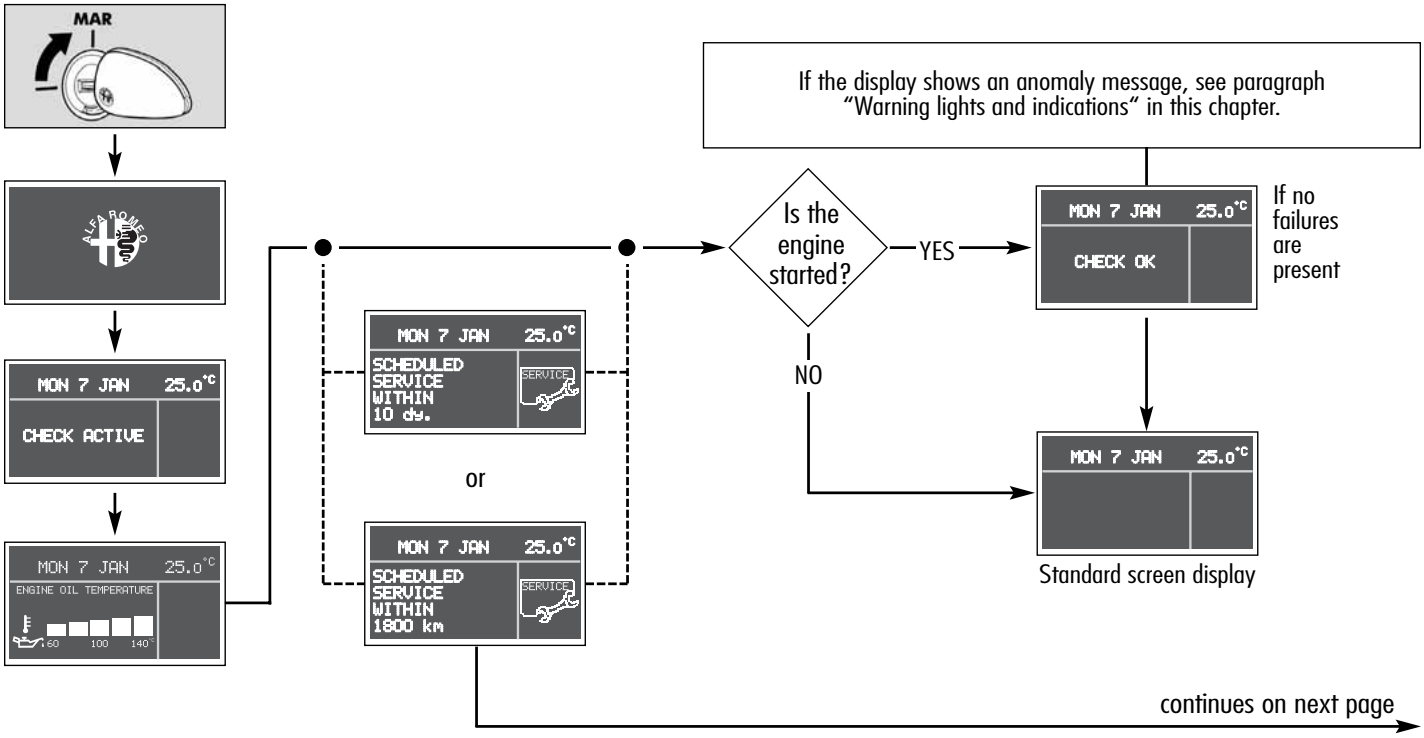

Downloaded from www.Manualslib.com manuals search engine

continued from previous page

The Programmed Maintenance Schedule includes car maintenance every 20,000 km (or 12,000 miles) or one year; this is shown automatically, with the ignition key at **MAR**, starting from 2,000 km (or 1,240 miles) or 30 day from this deadline and it is shown again every 200 km (or 124 miles) or 3 days. When a programmed maintenance interval ("coupon") is near to come, turning the ignition key to **MAR**, will display the message SCHEDULED SERVICE WITHIN followed by the number of kilometers, days or miles to go before vehicle maintenance. The PROGRAMMED MAINTENANCE message is displayed in km, mi or days, according to the approaching service interval. At the very moment the value of 0 km, 0 miles or 0 days is reached, the display will show, every time the ignition key is turned to **MAR**, the message SCHEDULED SERVICE EXPIRED, followed by the number of kilometers, miles or days. In this case, to reset this visual information contact Authorised Alfa Romeo Services.

Downloaded from www.Manualslib.com manuals search engine

ACCESS TO THE MENU SCREEN

After the INITIAL CHECK, it is possible to access the menu screen by pressing button INFO 1.

To navigate use the ⊕ and ⊖ buttons.

IMPORTANT If you access the Menu and no setting/adjustment is made within about 60 seconds, the system automatically leaves the Menu and displays the screen previously set. In this case, the latest setting selected but not confirmed (by means of button INFO 1) is not stored; therefore, the operation must be performed again.

– When the car is running, only the short menu can be accessed (SPEED LIMIT setting).

– When the car is stopped, the extended menu can be accessed.

The following table gives the description of the cases provided.

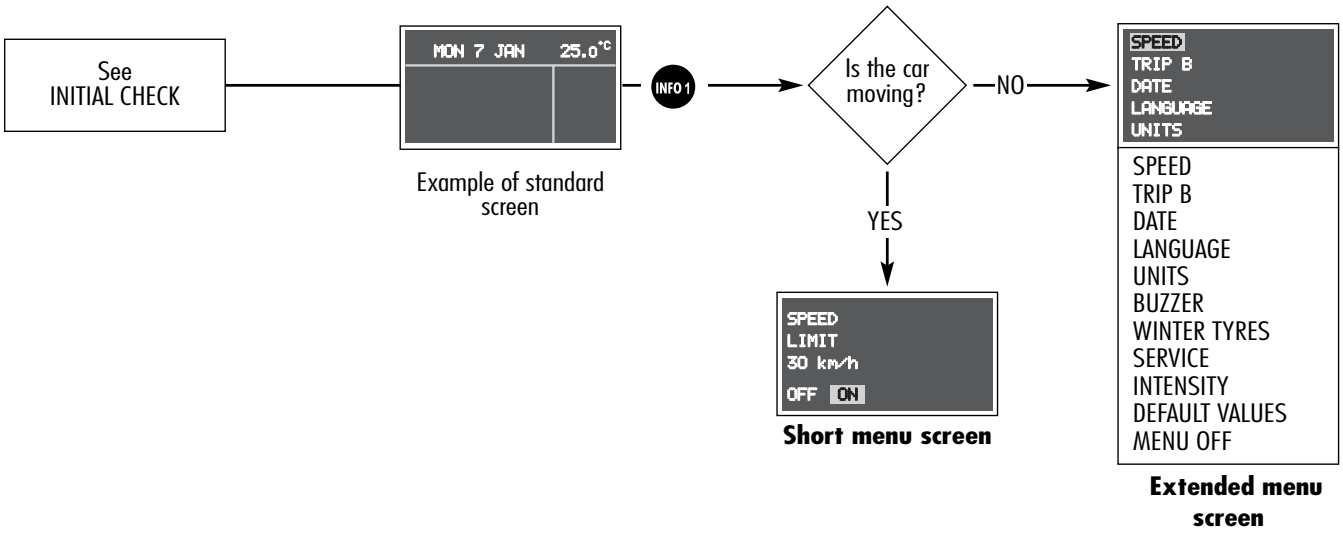

Downloaded from www.Manualslib.com manuals search engine

SPEED LIMIT (SPEED)

With this function it is possible to set the car speed limit which, if exceeded, automatically sounds a buzzer and displays a specific message to alert the driver. To set the limit speed, proceed as follows:

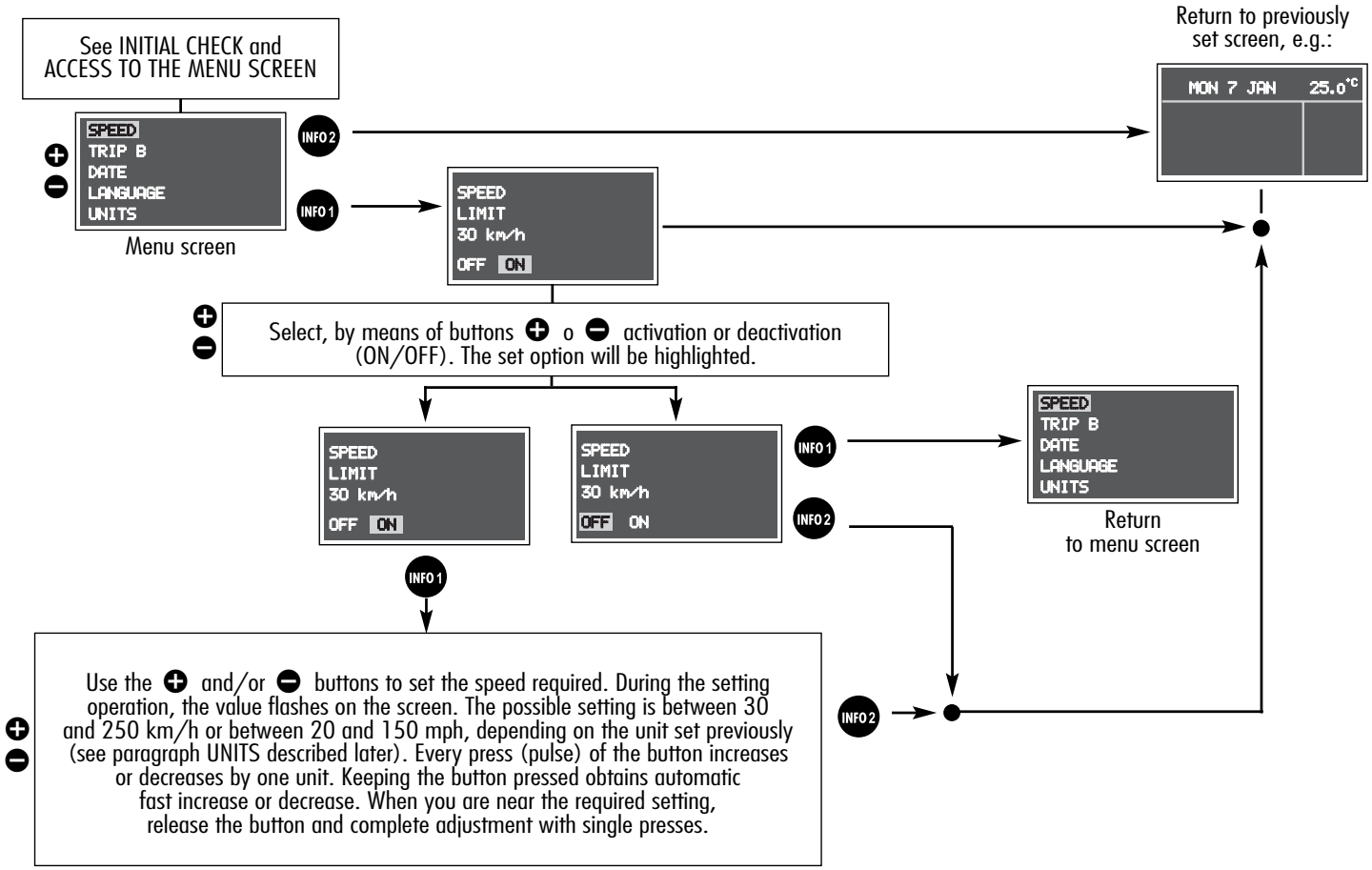

Downloaded from www.Manualslib.com manuals search engine

Speed limit exceeded indication

As soon as the vehicle exceeds the set speed limit, the following display is shown automatically, together with the sounding of a buzzer.

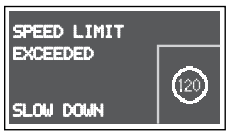

Example of display when the set value is 120 km/h

Downloaded from www.Manualslib.com manuals search engine

TRIP B ON/OFF (TRIP B)

With this option it is possible to turn ON or OFF the TRIP B function (partial trip) which displays the figures relating to: TRAVEL DISTANCE B, AVERAGE CONSUMPTION B, AVERAGE VELOCITY B, TRAVEL TIME B during a "partial mission".

For further details, see "General Trip -Trip B"

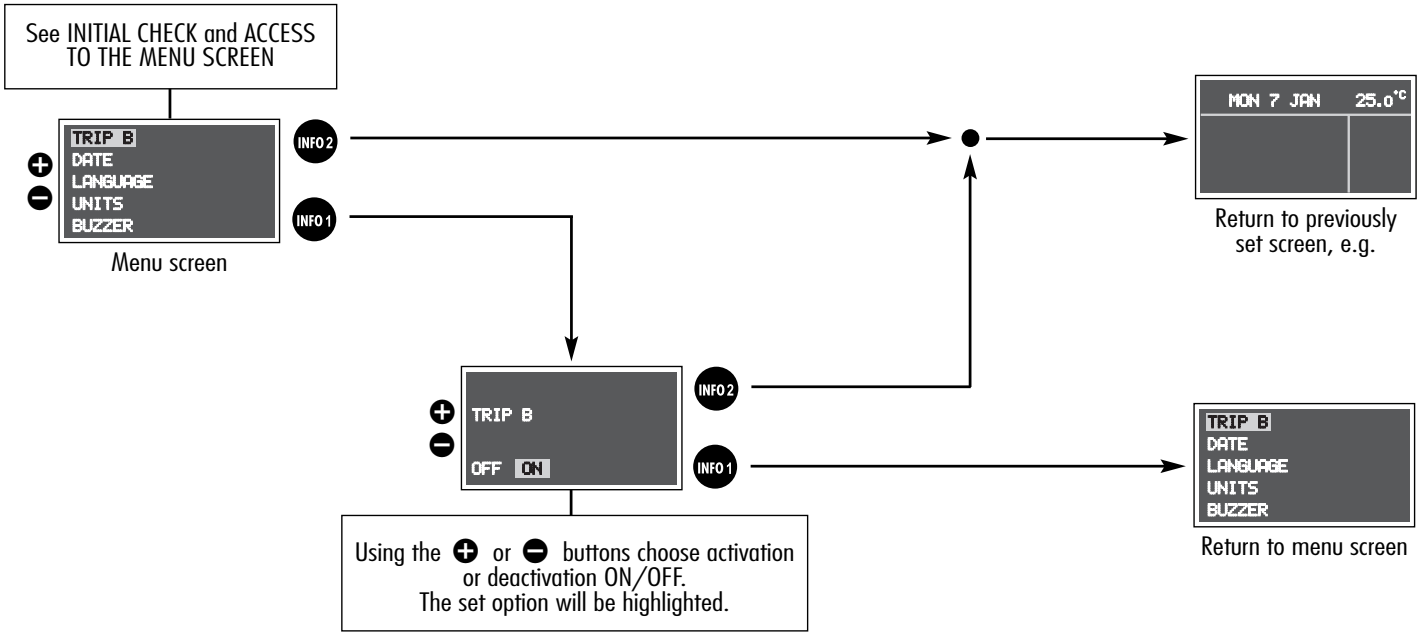

Downloaded from www.Manualslib.com manuals search engine

DATE SETTING/TIME SETTING (DATE)

To set the date (day - month - year) and the time (hours-minutes), proceed as follows:

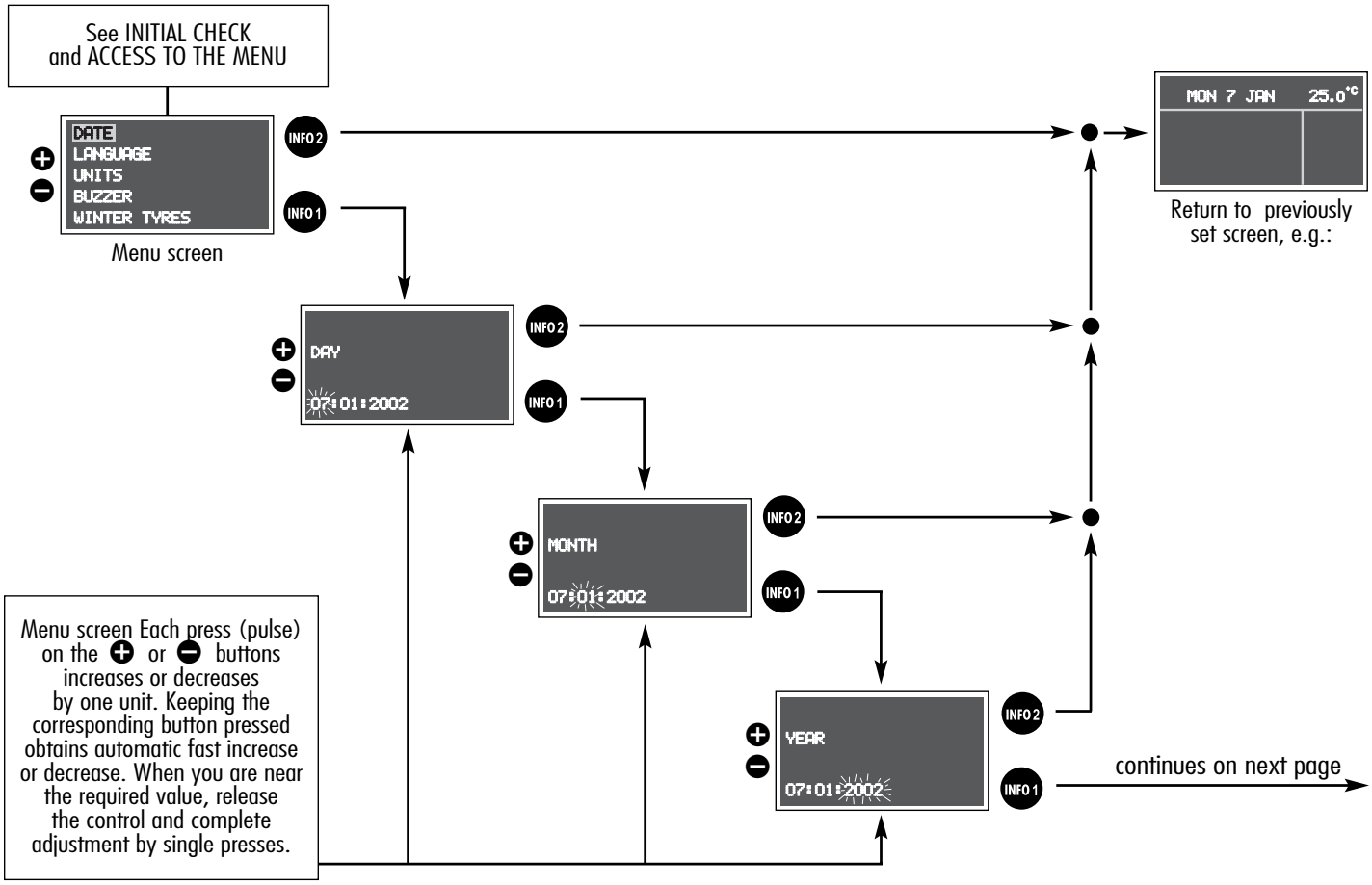

Downloaded from www.Manualslib.com manuals search engine

continued from previous page

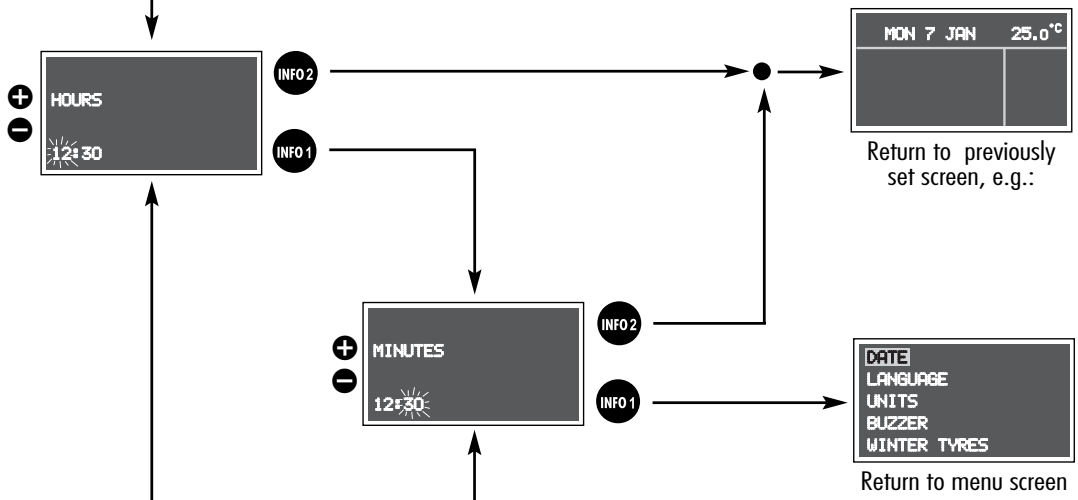

Each press (pulse) on the ⊕ or ⊖ buttons increases or decreases by one unit. Keeping the corresponding button pressed obtains automatic fast increase or decrease. When you are near the required value, release the control and complete adjustment by single presses.

Downloaded from www.Manualslib.com manuals search engine

LANGUAGE SELECTION (LANGUAGE)

The messages shown on the display can be provided in several languages (Italian, German, English, Spanish, French, Dutch, Portuguese).

To select the required language, proceed as follows:

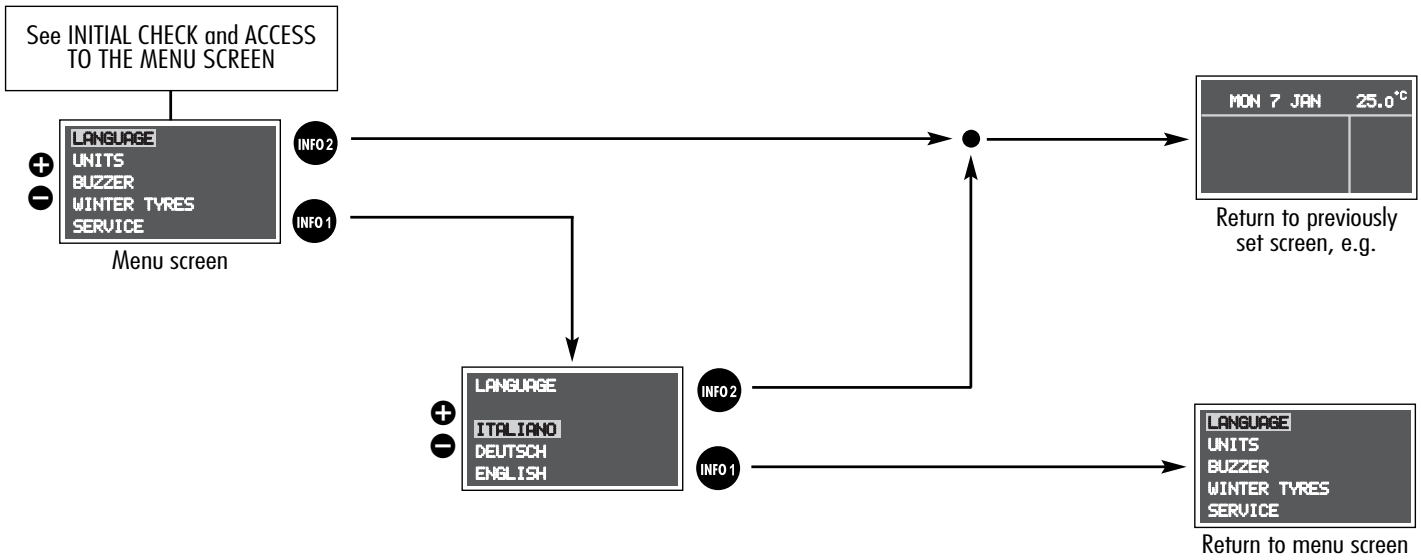

Downloaded from www.Manualslib.com manuals search engine

UNITS SELECTION (UNITS)

The display provides information in relation to the unit of measure set. To choose the units, proceed as follows:

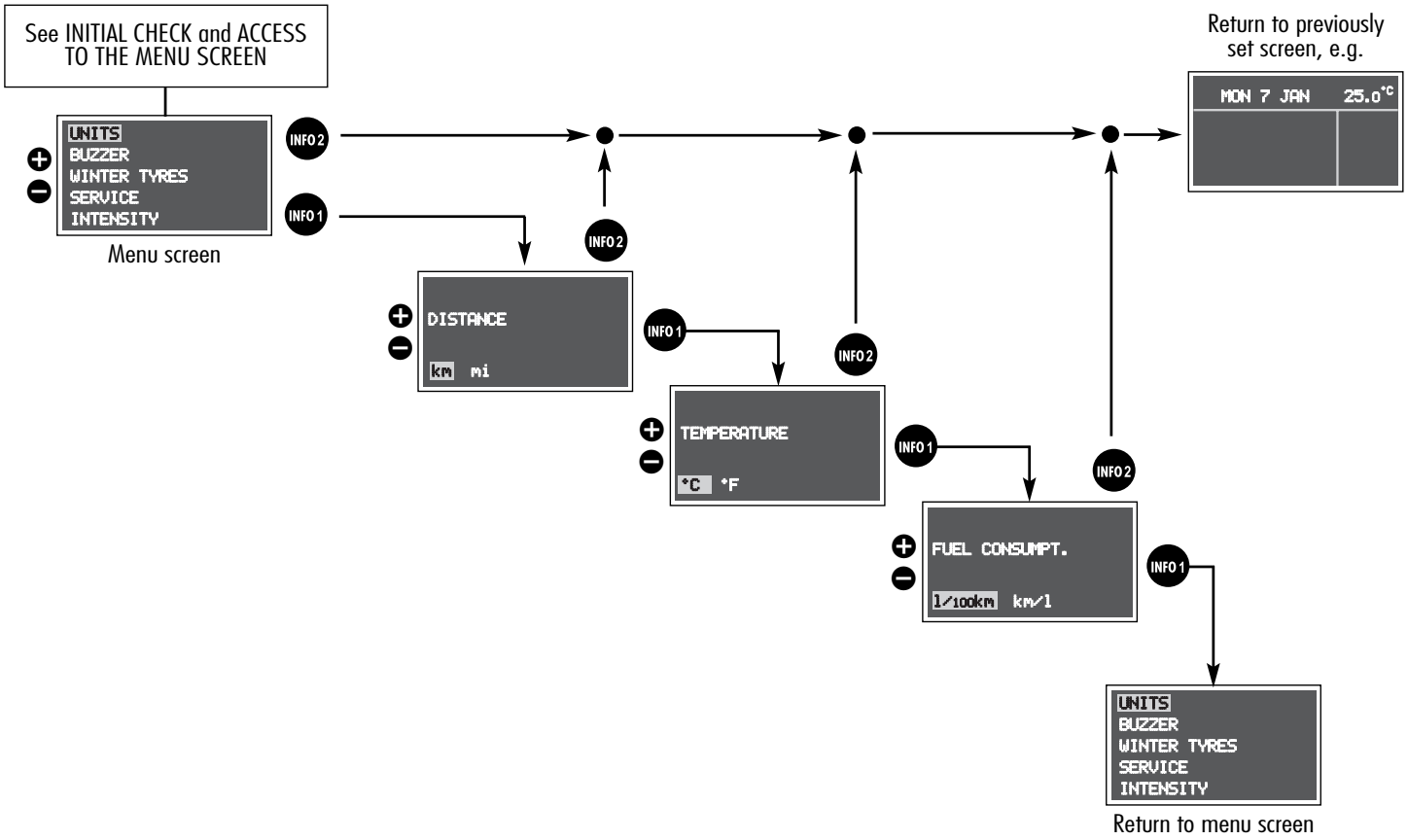

Downloaded from www.Manualslib.com manuals search engine

IMPORTANT/FAILURE BUZZER VOLUME SETTING (BUZZER)

The volume of the buzzer that signals any failure or warning to the driver can be adjusted according to a pre-set scale using the ⊕ and/or ⊖ buttons. To switch OFF or adjust, proceed as follows:

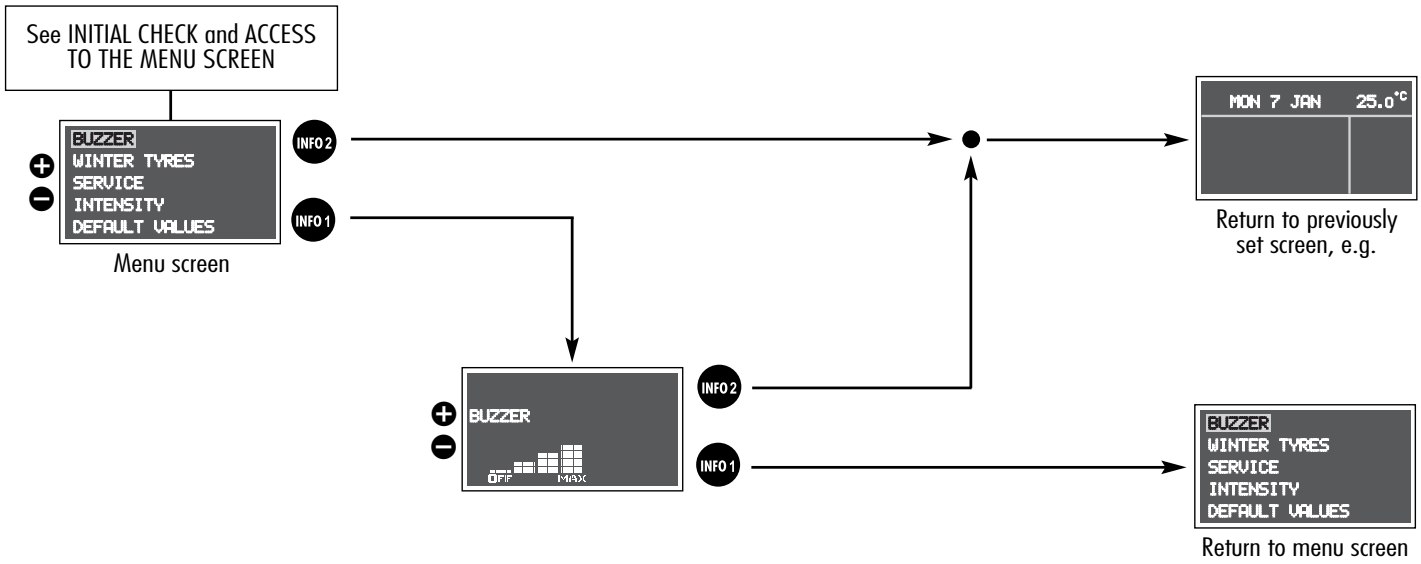

Downloaded from www.Manualslib.com manuals search engine

"WINTER" TYRES SPEED LIMIT (WINTER TYRES)

With this function it is possible to set the speed limit when travelling with winter tyres. The speed limit can be chosen between: 160 km/h, 190 km/h or 210 km/h (see paragraph "Winter tyres" in section "Correct use of the car").

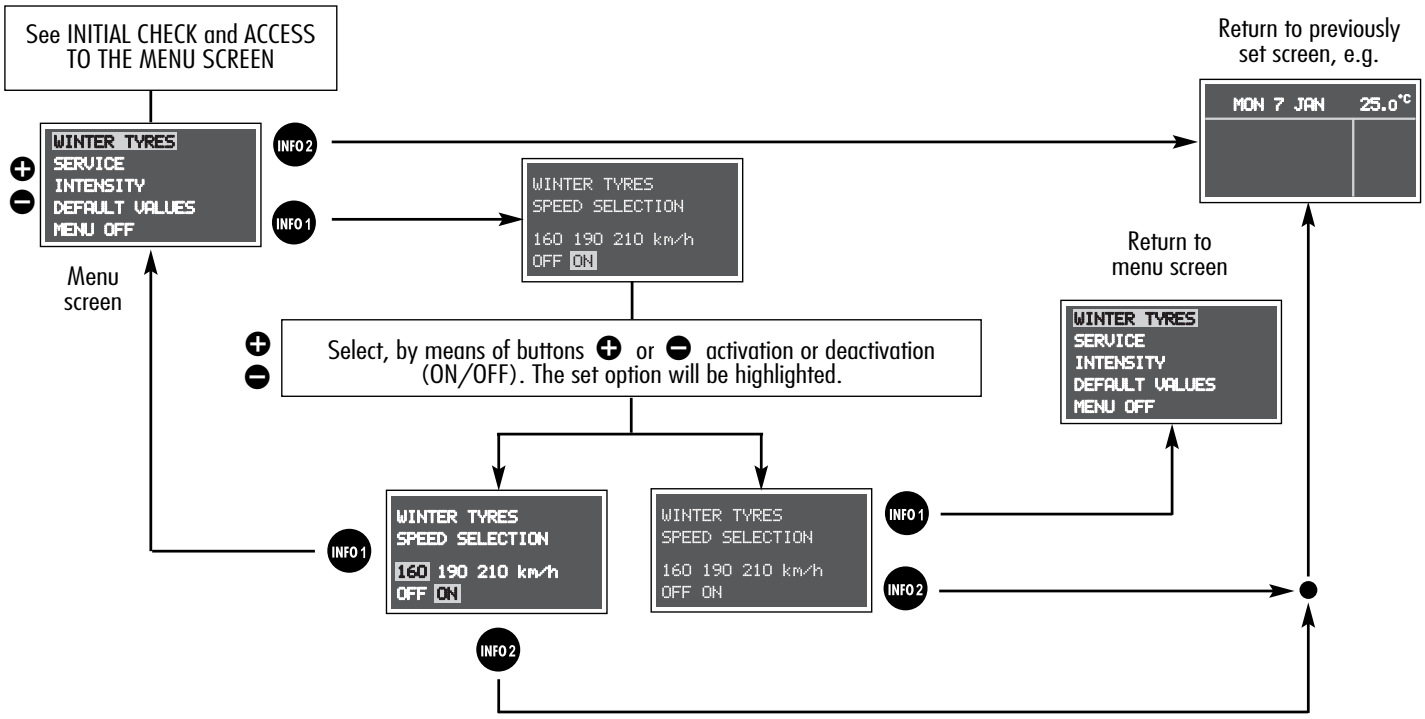

Downloaded from www.Manualslib.com manuals search engine

PROGRAMMED MAINTENANCE (SERVICE)

With the SERVICE function it is possible to receive information connected with correct vehicle maintenance. To consult this function, proceed as follows:

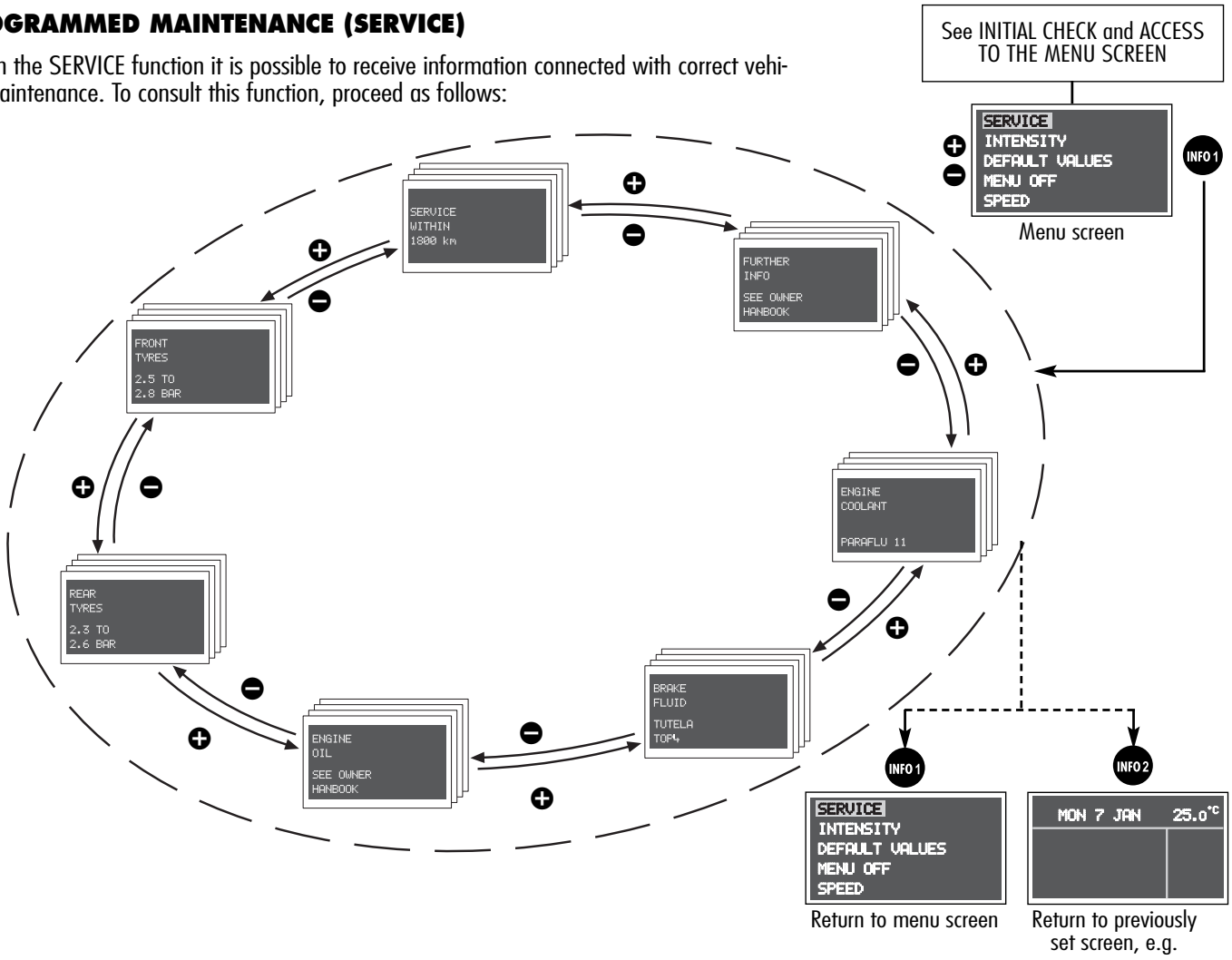

Downloaded from www.Manualslib.com manuals search engine

IMPORTANT Products shown in the SERVICE screen and to be used for scheduled maintenance could be subject to modifications. Refer to paragraph "Fluids and lubricants" in section "Technical specifications".

SCHEDULED
SERVICE
EXPIRED
0 km

The Programmed Maintenance Schedule includes vehicle maintenance every 20,000 km (or 12,000 miles) or one year; this is shown automatically, with the ignition key at **MAR**, starting from 2,000 km (or 1,240 miles) or 30 day from this deadline and it is shown again every 200 km (or 124 miles) or 3 days. When a programmed maintenance interval ("coupon") is near to come, turning the ignition key to **MAR**, will display the message SCHEDULED SERVICE WITHIN followed by the number of kilometers, days or miles to go before vehicle maintenance. The PROGRAMMED MAINTENANCE message is displayed in km, mi or days, according to the approaching service interval. At the very moment the value of 0 km, 0 miles or 0 days is reached, the display will show, every time the ignition key is turned to **MAR**, the message SCHEDULED SERVICE EXPIRED, followed by the number of kilometers, miles or days. In this case, to reset this visual information contact Authorised Alfa Romeo Services).

Downloaded from www.Manualslib.com manuals search engine

DISPLAY CONTRAST ADJUSTMENT (INTENSITY)

This function allows to adjust the Infocenter display intensity (dimming/brightening).

To perform the adjustment, proceed as follows:

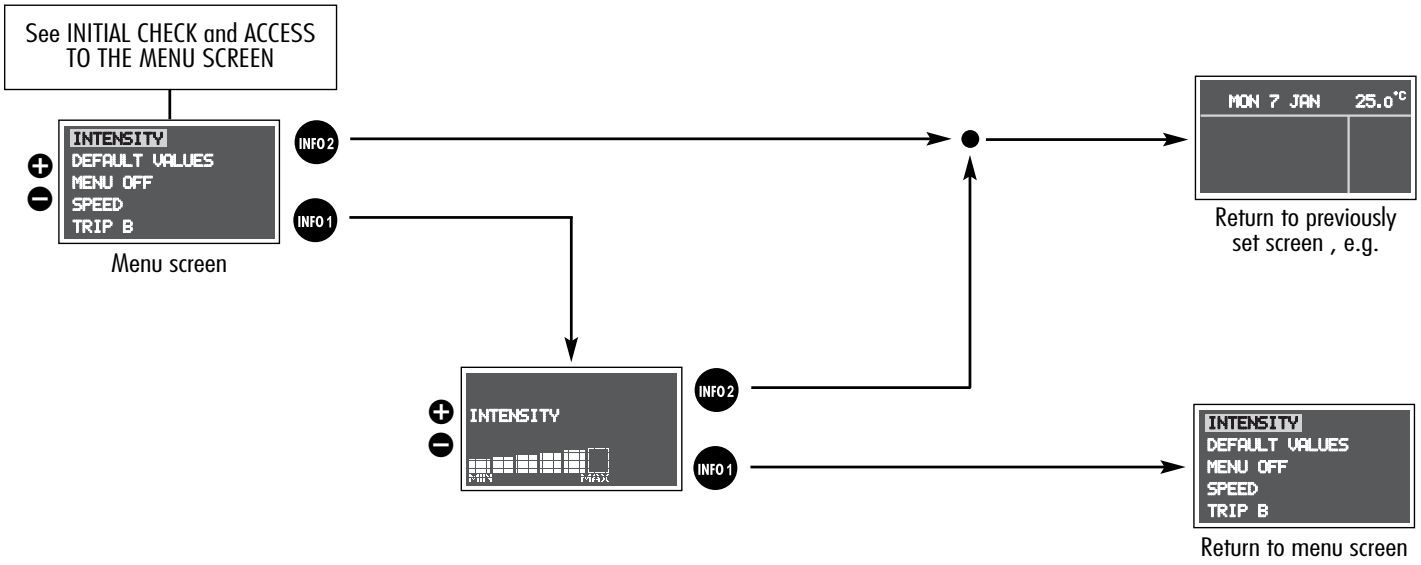

Downloaded from www.Manualslib.com manuals search engine

"DEFAULT" VALUES RESET (DEFAULT VALUES)

The following function:

— If ON restores: Speed limit, Trip B, Light rheostat, Language, Temperature unit, km/mi unit, Consumption unit, Buzzer, Winter tires, Contrast, with the following values Speed limit = 120 km/h, Trip B ON, Light rheostat ON = 4, Light rheostat OFF = 1, Language = Italian, Temperature unit = °C, Distance unit = km, Consumption unit = l/100 km, Buzzer = 2, Winter tires OFF (value set at 160 km/h), contrast value = 3

— If OFF, the above parameter values can be set manually

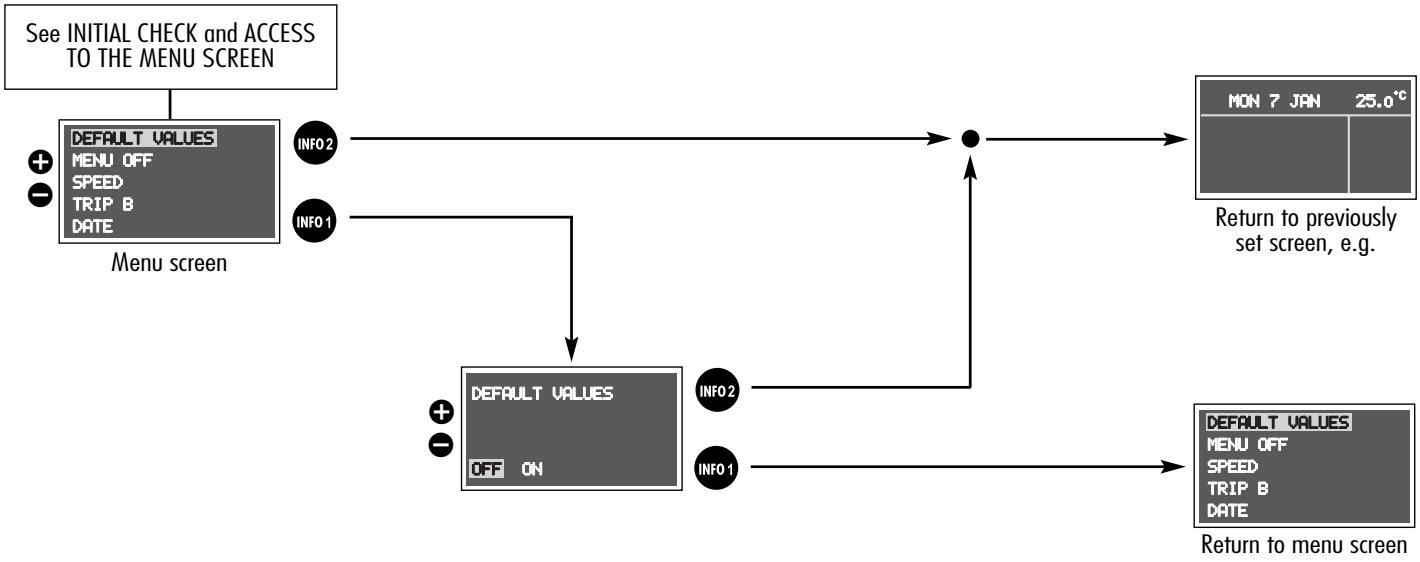

Downloaded from www.Manualslib.com manuals search engine

EXIT MENU (MENU OFF)

With this function it is possible to exit the setup menu and return to the previously set screen.

Downloaded from www.Manualslib.com manuals search engine

GENERAL TRIP - TRIP B

The TRIP COMPUTER function gives information relating to the operating status of the vehicle on the Infocenter display. This function comprises the GENERAL TRIP concerning the complete mission of the car and TRIP B concerning the partial car mission. This function (as shown in the graph below) is contained within the complete mission. Both functions are resettable.

The GENERAL TRIP displays the figures relating to RANGE, TRAVEL DISTANCE, AVERAGE CONSUMPTION, ACTUAL CONSUMPTION, AVERAGE VELOCITY, TRAVELTIME (complete mission time), ENGINE OIL TEMPERATURE.

The TRIP B (with automatic reset each time at least 2 hours have passed since stopping the engine), displays information concerning TRAVEL DISTANCE B, AVERAGE CONSUMPTION B, AVERAGE VELOCITY B, TRAVEL TIME B (partial mission time).

Start of journey procedure (reset)

To start a new journey monitored by the GENERAL TRIP, with the ignition key at **MAR**, press the button SET with SET 2 (see "Control buttons").

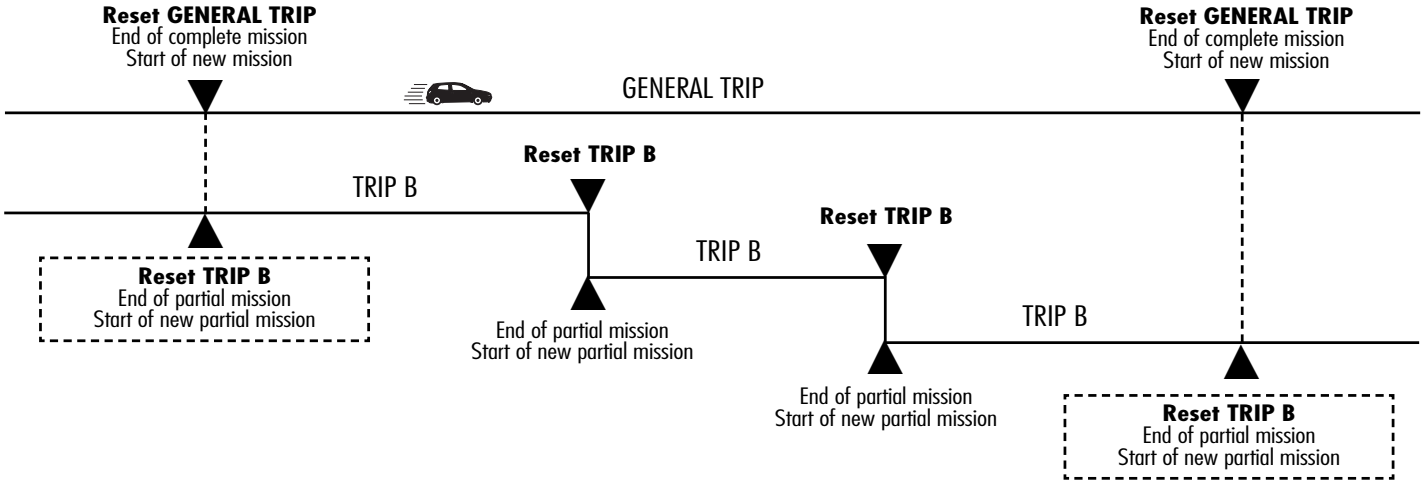

The reset operation (pressing the SET 2 button) in the presence of the screens concerning the GENERAL TRIP also makes it possible to reset TRIP B. The reset operation (pressing the SET 2 button) in the presence of only the screens concerning TRIP B makes it possible to reset only the information associated with this function.

IMPORTANT The RANGE and ACTUAL CONSUMPTION information cannot be reset.

Downloaded from www.Manualslib.com manuals search engine

IMPORTANT At the beginning of a new mission, due to battery reconnection, the average consumption value is initialised to the "average predefined standard consumption" equal to **12 l/100 km**.

The TRIP COMPUTER information is displayed in sequence according to the table below.

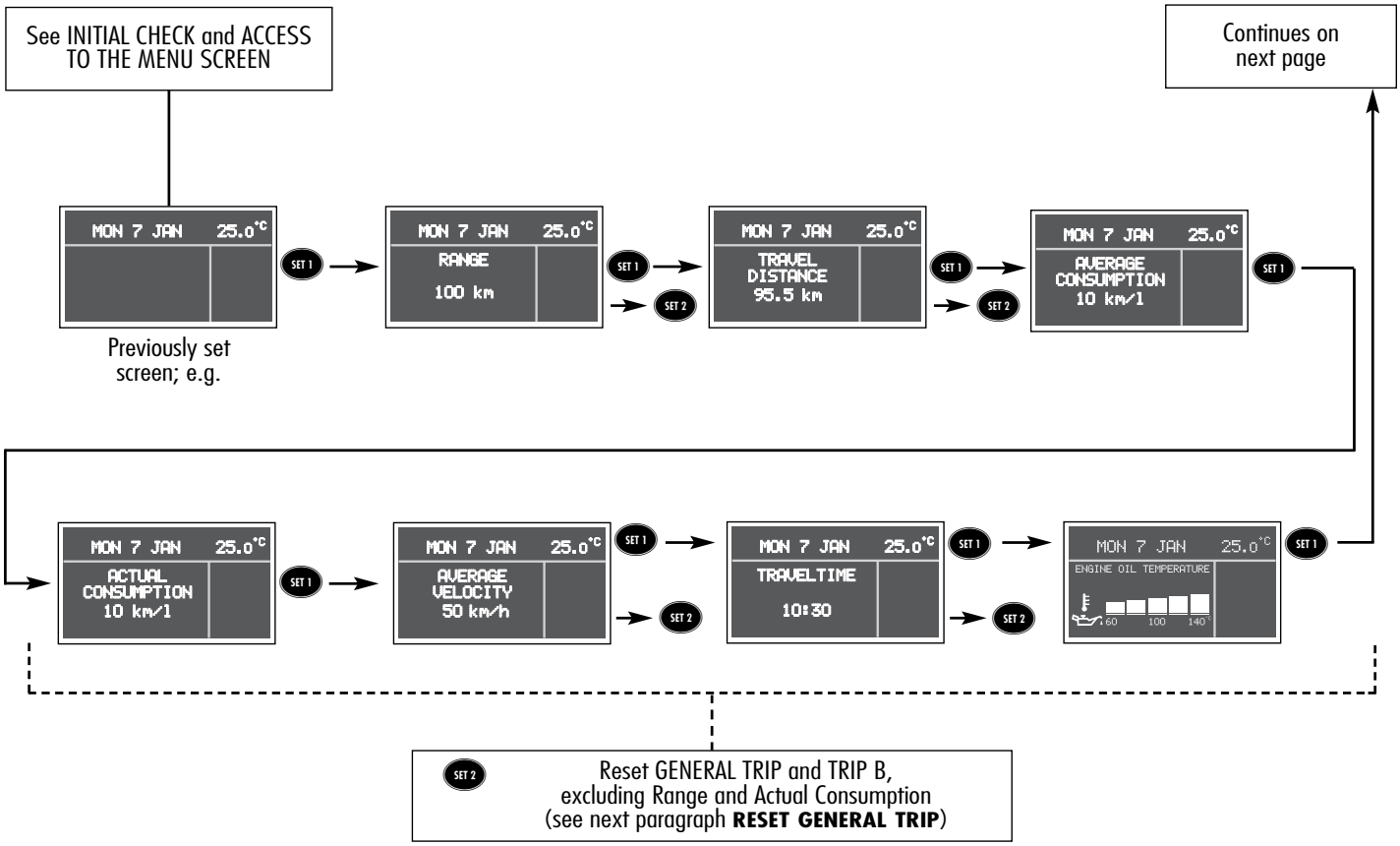

Downloaded from www.Manualslib.com manuals search engine

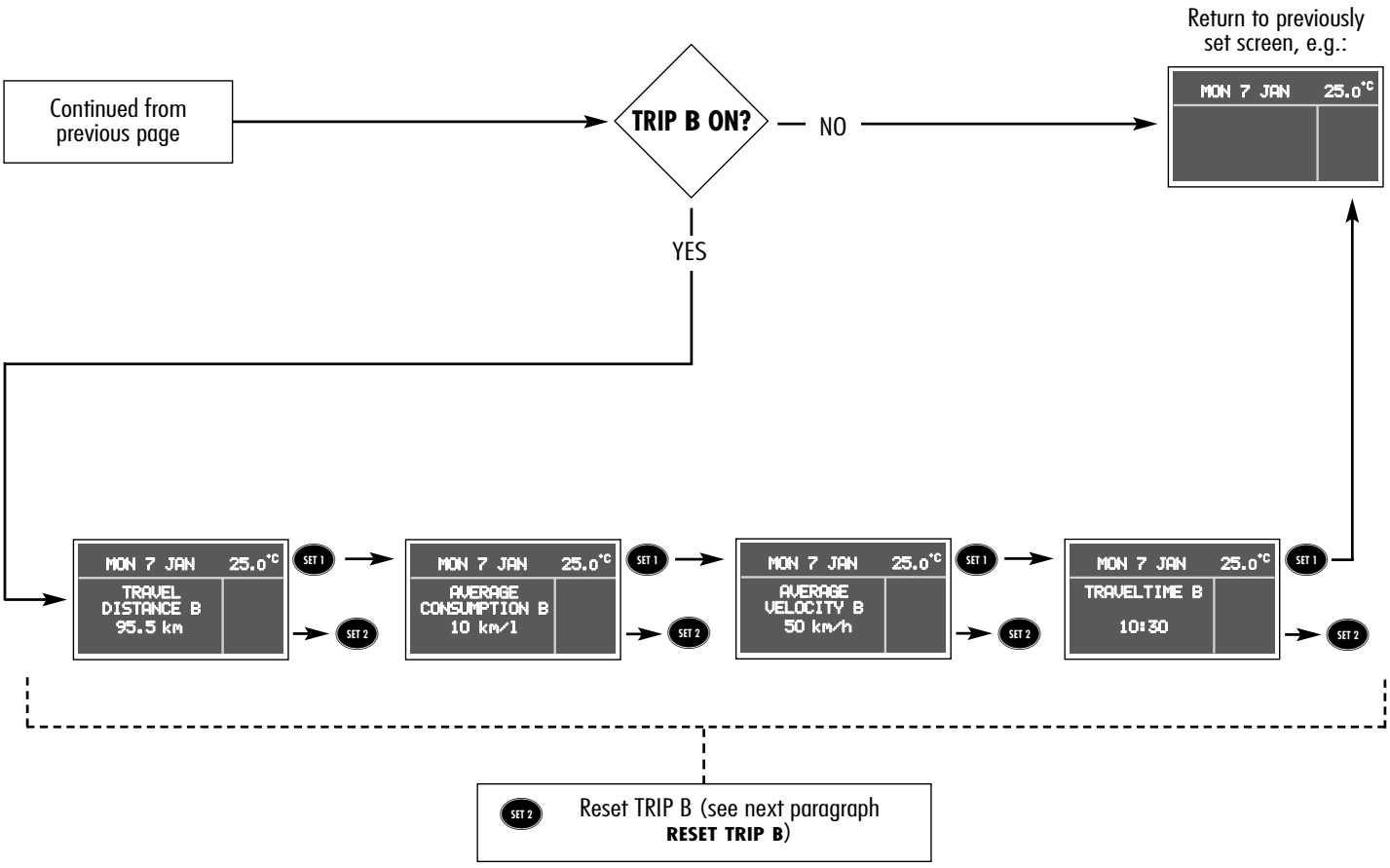

SET 2 Reset TRIP B (see next paragraph **RESET TRIP B**)

IMPORTANT Pressing the INFO button returns automatically to the standard screen

Downloaded from www.Manualslib.com manuals search engine

After resetting TRIP by pressing the button with SET 2 mode, the display will show the following functions:

Reset GENERAL TRIP

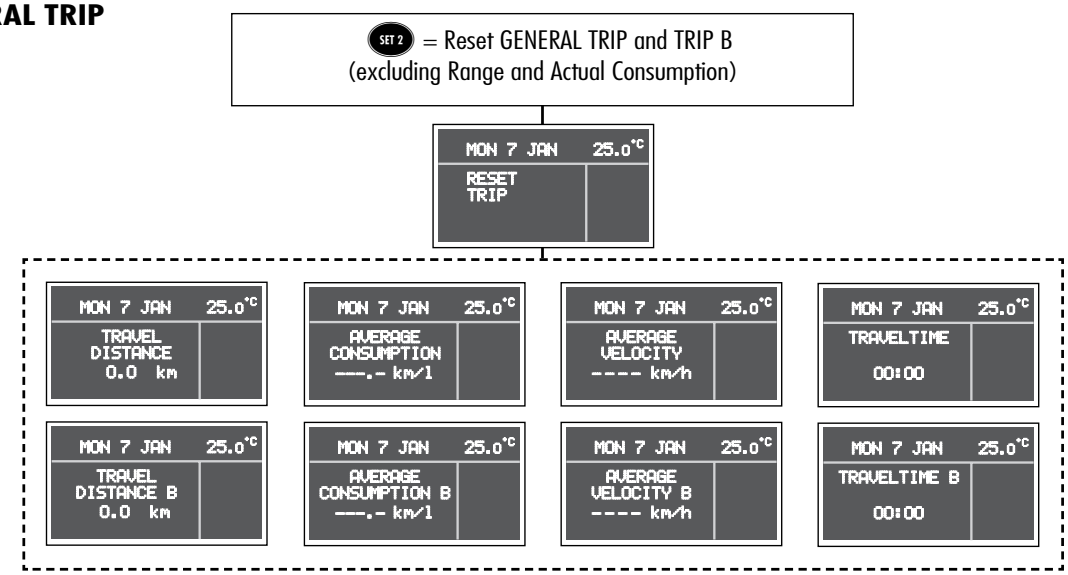

Reset TRIP B

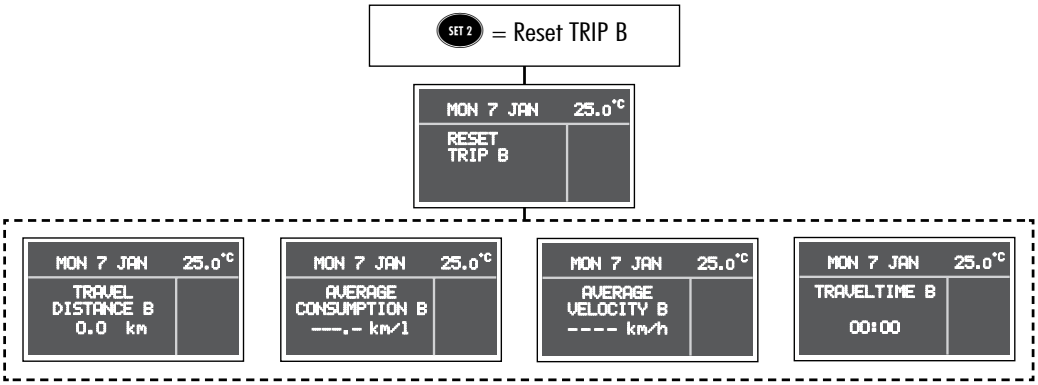

Downloaded from www.Manualslib.com manuals search engine

RANGE = This shows the distance (in km or miles) the car can still cover before needing fuel if keeping the same driving conditions. The display will show "----" after the following events:

A) range values lower than 50 km (approx. 31 miles) (after the reduced range warning message)

B) Parking with running engine or car speed lower than 4 km/h for over 5 minutes.

TRAVEL DISTANCE = This shows the distance traveled by the car from the start of the new mission (*).

AVERAGE CONSUMPTION = This shows the average actual consumption in l/km or in l/100km depending on the unit selected.

ACTUAL CONSUMPTION = This shows the consumption of the car updated every 5 sec. approx. If parking with running engine or in case of speed values lower than 4 km/h the display will show "----". Actual consumption calculation algorithm, according to the above procedure, restarts as soon as the car speed will be equal to or higher than 4 km/h.

AVERAGE VELOCITY = This shows the average speed of the car as a function of the overall travel time elapsed from the start of the new mission (*)

TRAVELTIME = time elapsed from the start of the new mission (*)

(*) **NEW MISSION**: this takes place when performing the "manual" reset by pressing the dedicated button.

IMPORTANT GENERAL TRIP is reset automatically when the Distance Traveled is equal to 9999,9 km (or mi), when Travel Time is 99:59 (99 hours and 59 minutes) or after reconnecting the battery.

IMPORTANT If no information is available, all the TRIP COMPUTER parameters display the message "****" instead of a value, together with the typical description of each parameter. When the normal operation condition is resumed, the count of the various parameters starts again normally, with no reset of the values displayed prior to the failure, nor the start of a new mission.

Downloaded from www.Manualslib.com manuals search engine

WARNING LIGHTS AND INDICATIONS

GENERAL WARNING

The **failure indications** shown on the Infocenter display, together with the buzzer (adjustable) and the turning on of the relevant warning light (if available), are accompanied by specific **warning messages** (e.g. "Go to dealer", "Switch off eng., do not proceed", etc...). These warnings are **concise and precautionary** and are intended to suggest the **prompt action** that the driver should take when a failure occurs. However, these warnings are not to be considered exhaustive and/or alternative to the prescriptions of this Owner's Manual, which must always be read over carefully. When an anomaly occurs **always refer to the contents of this chapter**.

IMPORTANT When an anomaly occurs, the Infocenter display reaches its maximum brightness. By pressing button INFO the warning messages disappear and the symbol referring to the failure warning is reduced to an icon in the right bottom area of the display.

IMPORTANT The anomaly warnings that appear on the Infocenter display are divided into two categories: very serious and serious anomalies. Very serious anomalies are displayed indefinitely, by interrupting any message previously shown on the display, and are proposed again every time the ignition key is turned to **MAR**, until the malfunction is eliminated. Moreover, the "cycle" can be interrupted by pressing button INFO: in this case, the symbol referring to the anomaly will be shown in the right bottom area of the display until the malfunction is eliminated.

Serious anomalies are displayed for about 20 seconds and then disappear, but they are proposed again every time the ignition key in turned to **MAR**. At the end of the display cycle, equal to about 20 seconds, or when button INFO, is pressed, the symbol referring to the anomaly will be shown in the right bottom area of the display until the malfunction is eliminated.

Downloaded from www.Manualslib.com manuals search engine

Warning light	Message on display	
	LOW BRAKE FLUID LEVEL AND/OR HANDBRAKE ON	**LOW BRAKE FLUID AND/OR HANDBRAKE ON** When the ignition key is turned to **MAR**, the warning light on the dial comes on but must go out after a few seconds. The warning light comes on (together with the message + symbol shown on the display) when the level of the brake fluid inside the tank falls below the minimum, due to a possible leak in the circuit and with the car moving. ***WARNING*** ***If the warning light comes on when travelling (together with the message on the display), check that the handbrake is not engaged. If the warning light stays on with the handbrake off (together with the message on the display), stop immediately and contact Alfa Romeo Authorized Services.***
	REPLACE BRAKE PADS GO TO DEALER	**BRAKE PAD WEAR** The warning light on the dial comes on (together with the message + symbol shown on the display) when the front brake pads are worn; in this case, have them replaced as soon as possible. **IMPORTANT** As the car is fitted with wear sensors for the front brake pads, when replacing them, also check the rear brake pads.

Downloaded from www.Manualslib.com manuals search engine

Warning light	Message on display	
●	ENGINE COOLANT MAX. TEMPERATURE SWICTCH OFF ENG. DO NOT PROCEED	**HIGH ENGINE COOLANT TEMPERATURE** ***WARNING*** ***When the engine is very hot, do not remove the tank cap: danger of burns.*** When the ignition key is turned to **MAR**, the warning light comes on but must go out after a few seconds. The engine coolant temperature warning light comes on (together with the message + symbol shown on the display) when the engine is overheated. If the warning light comes on, proceed as follows: – **Normal driving conditions**: stop the car, switch the engine off and check if the water level inside the tank is not below the reference mark **MIN**. In this case, wait a few minutes to let the engine cool down, then open the cap **slowly** and **carefully**, fill with coolant, making sure its level is between reference marks **MIN** and **MAX** on the tank. Moreover, perform a visual check for any fluid leakage. If the warning light comes on again the next time the engine is started, contact Alfa Romeo Authorized Services. – **Car heavy duty** (e.g. towing a trailer uphill or car fully loaded): slow down and, if the warning light stays on, stop the car. Pause for 2 or 3 minutes, keeping the engine on and slightly accelerated to facilitate better coolant circulation, then switch the engine off. Check correct fluid level, as described above. **IMPORTANT** In case of highly demanding use of the car, you are recommended to keep the engine on and slightly accelerated for a few minutes before switching it off.

Downloaded from www.Manualslib.com manuals search engine

Warning light	Message on display	
		AIR BAG FAILURE When the ignition key is turned to **MAR**, the warning light on the check panel comes on, but must go out after a few seconds. This warning light will come on glowing steadily if there is an operating failure in the Air bag system. ***WARNING*** ***If the warning light does not turn on when turning the ignition key to MAR or if it stays on when travelling, this could indicate a failure in safety retaining systems; under this condition air bags or pretensioners could not trigger in the event of collision or, in a restricted number of cases, they could trigger accidentally. Stop the car and contact Alfa Romeo Authorized Services to have the system checked immediately.*** ***WARNING*** ***The failure of the warning light (warning light off) is also indicated by the flashing of the passenger's front Air bag deactivated warning light for more than the normal seconds.***
		PASSENGER'S FRONT AIR BAG DEACTIVATED The check panel warning light turns on when the passenger's front Air bag is deactivated by means of the relevant key switch. With the passenger's front Air bag activated, turning the ignition key to **MAR**, the warning light on the check panel comes on but must go out after approx. 4 seconds. ***WARNING*** ***Warning light indicates also warning light failure. This is indicated by intermittent flashing, over 4 seconds, of warning light . In this event, warning light could be not up to indicate restraint system failures, if any. Stop the car and contact Alfa Romeo Authorized Services to have the system checked immediately.***

Downloaded from www.Manualslib.com manuals search engine

Warning light	Message on display	
	ENGINE OIL PRESSURE LOW SWITCH OFF ENG. DO NOT PROCEED	**LOW OIL PRESSURE** When the ignition key is turned to **MAR**, the warning light on the check panel comes on but must go out as soon as the engine is started. ***WARNING*** ***If the warning light comes on when travelling (together with the message + symbol shown on the display), switch the engine off immediately and contact Alfa Romeo Authorized Services.***
		LOW BATTERY CHARGE When the ignition key is turned to **MAR**, the warning light on the check panel comes on, but must go out as soon as the engine is started (a slight delay is permitted when the engine is running at idle). It if stays on, contact Alfa Romeo Authorized Services immediately.
		SEAT BELTS NOT FASTENED The warning light on the check panel will turn on for some seconds when, with the ignition key at **MAR**, the driver's seat belt is not fastened properly.

Downloaded from www.Manualslib.com manuals search engine

Warning light	Message on display	
	OPENED DOORS FRONT DOORS REAR	**INCOMPLETE DOOR CLOSING** The message + symbol shown on the display will appear when one or more doors or the tailgate are not properly shut.
	OPENED DOOR R FRONT	
	OPENED DOOR L FRONT	
	OPENED DOOR R REAR	
	OPENED DOOR L REAR	
	OPENED BOOT	

Downloaded from www.Manualslib.com manuals search engine

Warning light	Message on display	
		ENGINE CONTROL SYSTEM (EOBD) FAILURE In normal conditions, turning the ignition key to **MAR**, the dial warning light turns on but it should go off when the engine has started. The initial turning on indicates that the warning light is working properly. If the warning light stays on or turns on (together with the message + symbol shown on the display) when travelling: **glowing steadily** - indicates a fault in the supply/ignition system which could cause high exhaust emissions, possible lack of performance, poor handling and high consumption levels. In these conditions, it is possible to continue driving without however demanding heavy effort or high speeds. Prolonged use of the car with the warning light on may cause damage. Contact an Alfa Romeo Authorized Service as soon as possible. The warning light turns off if the fault disappears, but it is still stored by the system; **flashing** - indicates that the catalyst could be damaged (see paragraph on "EOBD system" in this chapter). If the warning light flashes, it is necessary to release the accelerator pedal to lower the speed until the warning light stops flashing; continue travelling at moderate speed trying to avoid driving conditions that could cause the warning light to flash again. Contact an Alfa Romeo Authorized Service as soon as possible. **If, when turning the ignition key to MAR, the warning light ⚙ does not switch on or if it turns on glowing steadily or flashing when travelling, contact Alfa Romeo Authorized Service as soon as possible. The operation of the warning light ⚙ can be checked by traffic agents by proper equipment, therefore comply with the regulations in force in the country where you are driving.**

Downloaded from www.Manualslib.com manuals search engine

Warning light	Message on display	
CODE		**ALFA ROMEO CODE SYSTEM** When the ignition key is turned to **MAR** the warning light on the check panel should flash only once and then go out. If the warning light stays on with the key at **MAR**, this indicates a possible failure: see "Alfa Romeo CODE system". **IMPORTANT** The turning on at the same time of and CODE warning lights indicates a failure of the Alfa Romeo CODE System. If with the engine running, the CODE warning light flashes, this means that the car is not protected by the engine inhibitor device (see "Alfa Romeo CODE system" in this chapter). Contact Alfa Romeo Authorized Services to have all the keys memorised.
	FUEL CUT OFF SWITCH ON REFER TO SERV.	**INERTIAL FUEL CUT-OFF SWITCH** The message + symbol are shown on the display when the fuel cut-off switch comes into operation. **WARNING** ***If, after the message has been displayed, you can smell fuel or notice leaks from the supply system, do not re-engage the switch to avoid the risk of fire.***

Downloaded from www.Manualslib.com manuals search engine

Warning light	Message on display	
ABS	ABS SYSTEM FAILURE GO TO DEALER	**INEFFICIENT ABS SYSTEM** When the ignition key is turned to **MAR**, the warning light comes on but must go out after a few seconds. This warning light comes on (together with the message + symbol on the display) when the system is inefficient. In this case, normal braking is ensured, though without making use of the ABS system. Caution is recommended, especially in cases of less than perfect grip. In any case, contact Alfa Romeo Authorized Services as soon as possible.
! + ABS	EBD SYSTEM FAILURE SWITCH OFF ENG. DO NOT PROCEED	**Inefficient EBD electronic braking distributor** ***WARNING*** ***The vehicle is equipped with an electronic braking distributor (EBD). Simultaneous lighting of dial warning lights (ABS) and (!) (together with the message + symbol on the display) with the engine running indicates an EBD system failure; in this case, any sudden braking action can cause early locking of rear wheels, with possible sideslip. Drive very carefully and go immediately to the nearest Alfa Romeo Authorized Service to have the system checked.***

Downloaded from www.Manualslib.com manuals search engine

Warning light	Message on display	
		ASR – WHEEL ANTISKID SYSTEM Turning the ignition key to **MAR**, the warning light on the dial turns on, but should go off after a few seconds. The warning light turns on together with the led on the ASR OFF button when the system is switched off by the drivers. The warning light flashes when the system cuts in, to alert the driver that the system is adapting to the road surface grip conditions. If the drivers doesn't switch off the system, the turning on of the warning light, together with the message (ASR OFF) on the display, indicates a failure of the ASR system. In this case contact Alfa Romeo Authorised Services as soon as possible.
		OUTSIDE LIGHT FAILURE When the ignition key is turned to **MAR**, the dial warning light comes on but must go out after a few seconds. The warning light comes on when an anomaly is found in one of the following lights: – sidelights – braking lights or corresponding fuse – rear fog guards – number plate lights. The warning of a fault may mean one or more blown bulbs, a burnt fuse or cut off connection.

Downloaded from www.Manualslib.com manuals search engine

Warning light	Message on display	
●		**FUEL RESERVE** The warning light comes on when about 7 litres of fuel are left in the tank, and when the car range is below 50 km.
	ATTENTION: LIMITED RANGE	**REDUCED RANGE** This message is displayed when the car range is below 50 km.
	SPEED LIMIT EXCEEDED SLOW DOWN 120	**SPEED LIMIT EXCEEDED** The message + symbol turn on, together with the sound of the buzzer, on the display when the vehicle exceeds the speed limit set previously (see "Speed limit" in this section).
	MON 7 JAN 25.0°C SCHEDULED SERVICE WITHIN 1800 km SERVICE	**SCHEDULED MAINTENANCE** This message appears on the display 2,000 kilometres from the deadline given in the Scheduled Maintenance Programme (every 20,000 km) and it is shown again at timed intervals, turning the ignition key to **MAR** every 200 km.

Downloaded from www.Manualslib.com manuals search engine

Warning light	Message on display	
		REAR FOG GUARDS This warning light comes on when the rear fog guards are turned on.
		FRONT FOG LIGHTS This warning light comes on when the front fog lights are turned on.
		LEFT-HAND DIRECTION INDICATOR (INTERMITTENT) This warning light comes on when the control lever is moved downwards or, together with right-hand indicator, when the hazard warning lights are switched on.
		RIGHT-HAND DIRECTION INDICATOR (INTERMITTENT) This warning light comes on when the control lever is moved upwards or, together with the left-hand indicator, when the hazard warning lights are switched on.

Downloaded from www.Manualslib.com manuals search engine

Warning light	Message on display	
		SIDELIGHTS AND DIPPED-BEAM HEADLIGHTS The warning light on the dial comes on when the sidelights or dipped-beam headlights are switched on.
		CONSTANT SPEED ADJUSTMENT (CRUISE CONTROL) (where applicable) The warning light on the check panel turns on, with the knurled ring of the cruise control in the ON position, when the device starts to intervene on the engine.
		MAIN-BEAM HEADLIGHTS The warning light comes on when these lights are turned on.
		DIRECTION INDICATORS IF A TRAILER IS TOWED The warning light on the dial comes on when the direction indicator control lever is moved up or down, or when the hazard warning light button is pressed.
	POSSIBLE ICE ON ROAD	**POSSIBLE PRESENCE OF ICE ON THE ROAD** The message + symbol are shown on the display, and the buzzer sounds, when the outside temperature reaches or falls below 3°C to warn the driver of possible presence of ice on the road.

Downloaded from www.Manualslib.com manuals search engine

Warning light	Message on display	
		SELESPEED GEARBOX FAILURE Turning the ignition key to **MAR**, the warning light on the cluster shall come on and then go off after about 4 seconds. If the warning light stays on, it indicates that a fault has been detected in the Selespeed gearbox; at the same time, the buzzer beeps intermittently for 4 seconds to draw the attention of the driver. Contact Alfa Romeo Authorised Services as soon as possible to remove the fault.
		Q-SYSTEM AUTOMATIC GEARBOX FAILURE Turning the ignition key to **MAR**, the warning light on the cluster shall come on and then go off after about 4 seconds. If the warning light stays on or turns on when travelling, it indicates overheated gearbox oil (**glowing steadily**) or a gearbox fault (**flashing**). **Warning light glowing steadily**: it indicates that the gearbox oil has reached the maximum established temperature. To make oil cooling down, stop the car, move the lever to **P** or **N** and let the engine idle until the warning light goes out. Resume driving without demanding high performance from the engine. If the warning light comes on again, it is necessary to stop again with the engine idling until it goes out again. If the interval between one lighting up of the warning light and next is below 15 minutes, you are advised to stop the car, turn the engine off and wait for the engine-gearbox unit to cool down completely. Contact Alfa Romeo Authorised Services as soon as possible. **Warning light flashing:** it indicates a fault in the automatic gearbox. The automatic control system provides an emergency programme. Under these circumstances, you are advised to stop the car and turn the engine off; in fact, the next time the engine is started, the self-diagnostic system could cut off the fault which will however be memorised. Conversely, if the fault remains (warning light flashing), it is necessary to select the gears manually as if driving a car with mechanical gearbox, bearing in mind that the only two speeds available are the 2nd and 4th gear. Contact Alfa Romeo Authorised Services as soon as possible.

Downloaded from www.Manualslib.com manuals search engine

CLIMATE CONTROL SYSTEM

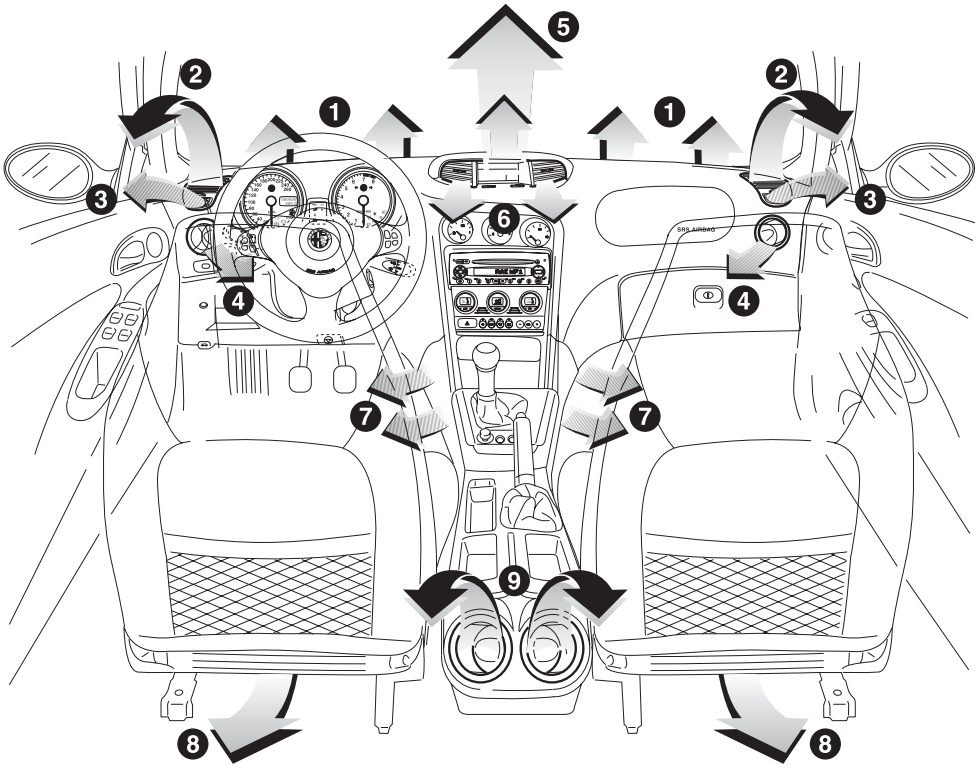

fig. 84

1 Central defrosting/demisting vents for windscreen - **2** Adjustable upper side vents - **3** Defrosting/demisting vents for side windows - **4** Adjustable side air outlets - **5** Adjustable upper vent - **6** Adjustable centre, swivel vents - **7** Front feet area fixed vents - **8** Rear feet area fixed vents - **9** Rear adjustable swivel outlets.

Downloaded from www.Manualslib.com manuals search engine

UPPER VENT ADJUSTMENT (fig. 85)

The vent has an opening/closing control.

● = Completely closed.

= Completely open.

CENTRE VENT ADJUSTMENT (fig. 86)

Each vent has a lever which makes it possible to direct the flow of air towards the passengers in an horizontal direction. To adjust the air flow, use the opening/closing control.

● = Completely closed.

= Completely open.

UPPER SIDE VENT ADJUSTMENT (fig. 87)

On the dashboard ends are adjustable vents (**A**) for car interior, and fixed defrosting/demisting vents (**B**) for side windows.

Air flow can be adjusted by means of the knob (**C**).

● = Completely closed.

= Completely open.

A0B0015m

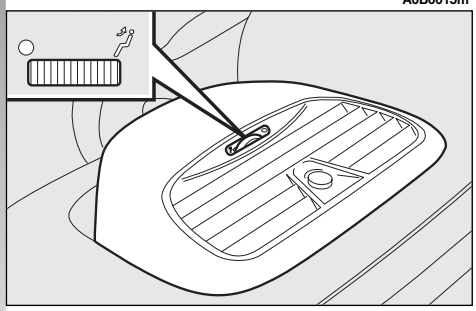

fig. 85

A0B0037m

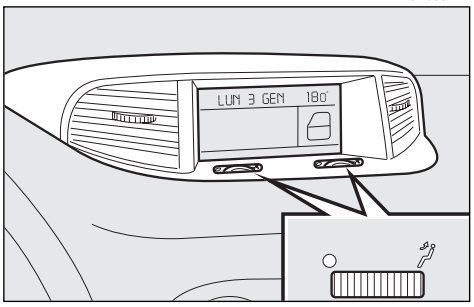

fig. 86

A0B0039m

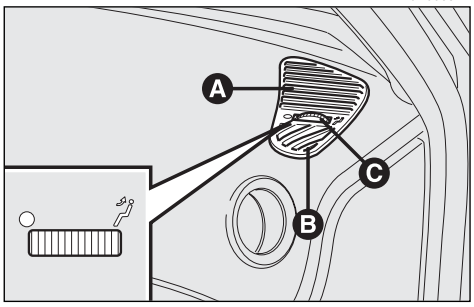

fig. 87

Downloaded from www.Manualslib.com manuals search engine

REAR SWIVEL OUTLET ADJUSTMENT

Fig. 88: front seats (on dashboard ends)

Fig. 89: rear seat (on the console between seats)

Air flow can be adjusted by means of vanes (**A**) with press-on opening and closing.

Air flow can be directed by rotating the outlet by means of the vanes.

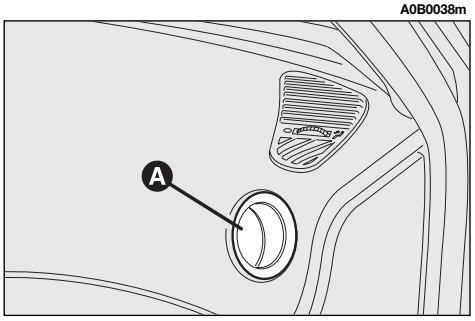

fig. 88

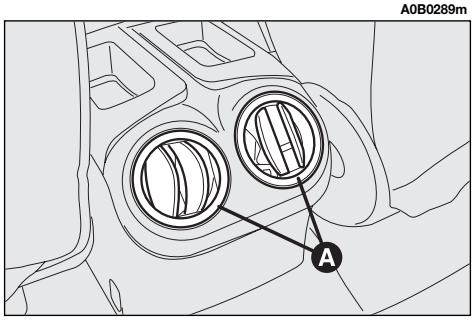

fig. 89

AUTOMATIC TWO-ZONE CLIMATE CONTROL SYSTEM

To start the system:

— turn the knob rings to set the required temperatures (driver's side — passenger's side).

— press the **AUTO** (**fig. 90**) button.

IMPORTANT The climate control system makes it possible to adjust the temperatures required for the two sides with a maximum difference of 7°C between the driver's and the passenger's sides.

IMPORTANT The climate control compressor works only when the engine is running and the outside temperature is more than 2°C.

Downloaded from www.Manualslib.com manuals search engine

WARNING

The climate control compressor cannot work when the outside temperature is less than 2°C. Therefore, it is recommended that the internal air recirculation function is not used when the outside temperature is low, as the windows could mist

For more detailed information on the system and how to make the best use of it, read the instructions given in the following pages.

The coolant used for the climate control system is R134a which meets current regulations and does not harm the environment in the event of accidental spillage.

Absolutely avoid the use of other fluids which are incompatible with the system components.

GENERAL

The car is equipped with a two-zone climate control system, controlled by an electronic control unit which makes it possible to separately adjust the air temperature on the driver's side and on the passenger's side. To obtain optimum temperature control in the two areas of the passenger compartment, the system has an outside sensor, a passenger compartment sensor and a two-zone sun ray sensor.

The system is integrated with an incipient misting sensor installed behind the internal rearview mirror, which is able to "monitor" a predefined area of the windscreen inner surface which can automatically act on the system to prevent or reduce misting, through a series of operations such as: opening air recirculation, enabling compressor, air flow to the windscreen, fan speed sufficient for demisting; and, in case of heavy misting, enabling the **MAX-DEF** function.

A0B0382m

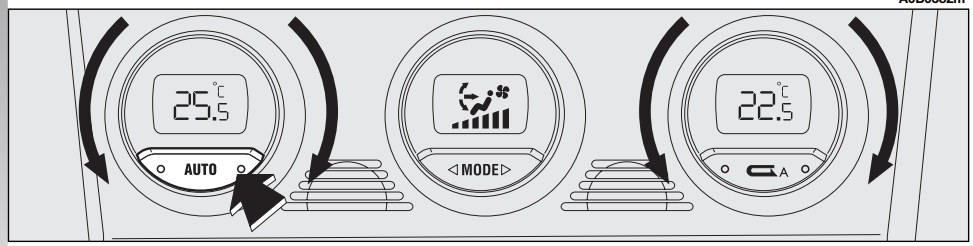

fig. 90

Downloaded from www.Manualslib.com manuals search engine

To ensure correct operation of the incipient misting sensor, stickers (e.g. road licence holder) must not be applied in the "control" area between the sensor and the windscreen. For this very reason, both the sensor and the windscreen must always be kept clean, to avoid accumulation of dirt or other substances.

IMPORTANT The demisting procedure is enabled every time the ignition key is turned to **MAR**, or pressing the **AUTO** button. When this procedure is working it can be turned off pressing one of the following buttons: compressor, air recirculation, air distribution, air flow. This operation inhibits the incipient misting sensor signal until the **AUTO** button is pressed again or the next time the ignition key is turned to **MAR**.

The system is integrated by an anti-pollution sensor that is able to switch on the inside air recirculation function automatically, to reduce the unpleasant smell of polluted air when driving in urban areas, queues, tunnels, and when the windscreen wash/wiper is operated (with the typical smell of spirits).

IMPORTANT The function of the anti-pollution sensor is subordinate to safety conditions; therefore disabling the climate control compressor or at an outside temperature below 4°C, the sensor is disabled. In any case, the sensor can be re-enabled pressing the recirculation button until taking it to the automatic mode.

The anti-pollution sensor is placed in the air flow in front of the combined particle activated carbon filter and, therefore, must be protected against possible compressed air jets produced by cleaning equipment. Moreover, the water collected from the windscreen wipers should not come into contact with the sensor: otherwise, the internal air recirculation function could be disabled for long periods.

Downloaded from www.Manualslib.com manuals search engine

The air quality control is also entrusted to a combined particle and activated carbon filter.

The climate control system automatically controls and adjusts the following parameters and functions:

— temperature of the air admitted to the passenger compartment (for the driver's and passenger's side separately)

— fan speed

— air distribution

— inside air recirculation on/off

— climate control compressor on/off enable.

The settings of the following functions can be modified manually:

— fan speed

— air distribution

— inside air recirculation on/off

— climate control compressor on/off enable.

— window defrosting/demisting

The control of the functions that have not been modified manually will always be automatic and, in any case, the temperature of the air flowing into the passenger compartment is controlled automatically depending on the temperatures set on the driver's and passenger's displays.

IMPORTANT Manual selections prevail over automatic ones and remain in storage until the user decides to resume automatic control. The settings selected manually are stored when the engine is switched off and resumed the next time the engine is started.

Downloaded from www.Manualslib.com manuals search engine

CONTROLS (fig. 91)

1 - Inside temperature adjustment knob (driver's side)

2 - Inside temperature set display (driver's side)

3 - Knob for adjusting the fan speed and switching the system off

4 - Fan speed set, air distribution and system off display (**OFF**)

5 - Inside temperature set display (passenger's side)

6 - Inside temperature adjustment knob (passenger's side)

7 - Inside air recirculation on/off button (manual/automatic)

8 - Air distribution selection button

9 - Rearscreen heating and wing mirror defrosting on/off button

10 - Maximum defrosting/demisting on/off button for windscreen and front side windows, rearscreen heating and wing mirror coils (function **MAX-DEF** -)

11 - Button for aligning the temperature set on the passenger's side with that on the driver's side **MONO**

12 - Climate control compressor on/off enable button

13 - Inside air temperature sensor

14 - Button for selecting the system automatic mode **AUTO**

A0B0056m

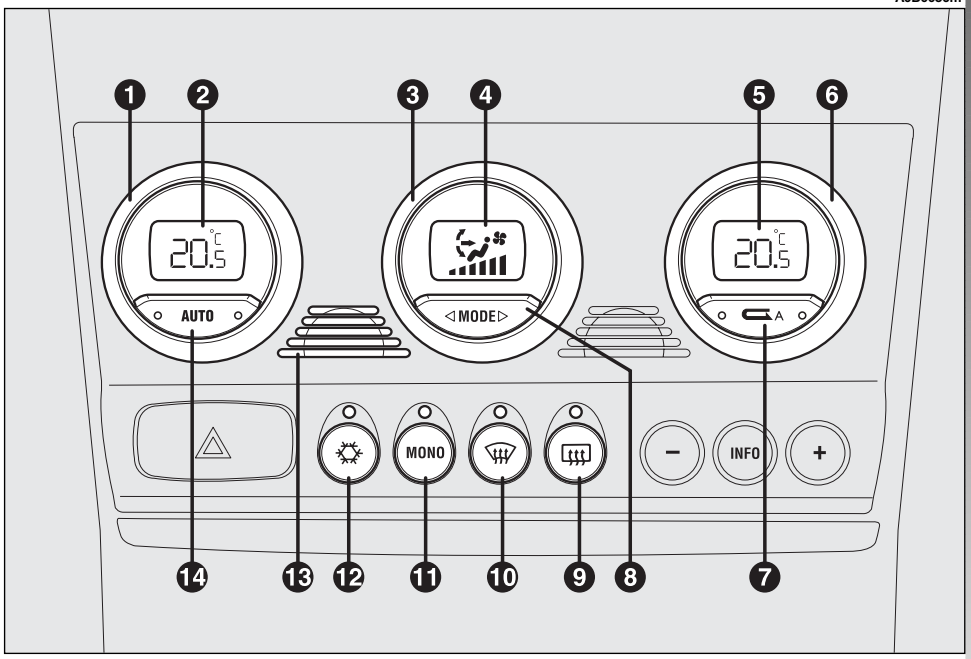

fig. 91

Downloaded from www.Manualslib.com manuals search engine

HOW TO USE THE AUTOMATIC TWO-ZONE CLIMATE CONTROL (fig. 91)

IMPORTANT The knob rings are not provided with automatic stopper; therefore, they are free to rotate in both directions once they have reached the maximum or minimum values.

The system can be started in different ways, but it is recommended that the required temperatures are set on the displays; then, press (**14**) **AUTO** button.

Thus, the system will start operating fully automatic, to reach the set temperatures in the shortest possible time and keep them.

During the fully automatic operation of the system, the set temperatures can however be modified at any time: the system will automatically modify its own settings to adapt itself to the new requirements.

IMPORTANT The temperature difference between the driver's and the passenger's sides must not be greater than 7°C in order to be accepted by the system.

The selections made by the system in automatic mode can be customized by manually acting on the following controls:

— fan speed adjustment knob (**3**)

— air distribution selection button (**8**)

— inside air recirculation on/off button (**7**)

— climate control compressor on enable button (**12**).

Manually selecting one or more of these functions turns off the right led on the button (**14**) **AUTO**.

With one or more functions switched on manually, the temperature control for the air admitted to the passenger compartment will in any case continue to be monitored automatically by the system (left led on button **14** **AUTO** on), except with the climate control compressor off.

In fact, in this condition, the temperature of the air admitted into the passenger compartment cannot be lower than the outside air temperature; this condition is indicated by the turning off of the two leds on button (**14**) **AUTO** and flashing on the display (**2**) and/or (**5**) related with the temperature rate that cannot be obtained.

Downloaded from www.Manualslib.com manuals search engine

AIR TEMPERATURE ADJUSTMENT KNOBS (fig. 92)

Turning the rings of knobs (**1** or **6**) clockwise or counterclockwise, respectively highers or lowers the temperature of the air required in the left zone (knob **1**) or right zone (knob **6**) of the passenger compartment. The temperatures set are shown on the displays (**2**) and (**5**) placed below the respective knobs.

Separate operation of the temperatures set is restored automatically using knob (**6**) is actuated.

Turning the knob rings clockwise or counterclockwise, until they reach the extreme selection positions **HI** or **LO**, will cause the maximum heating or cooling functions, respectively, to be switched on:

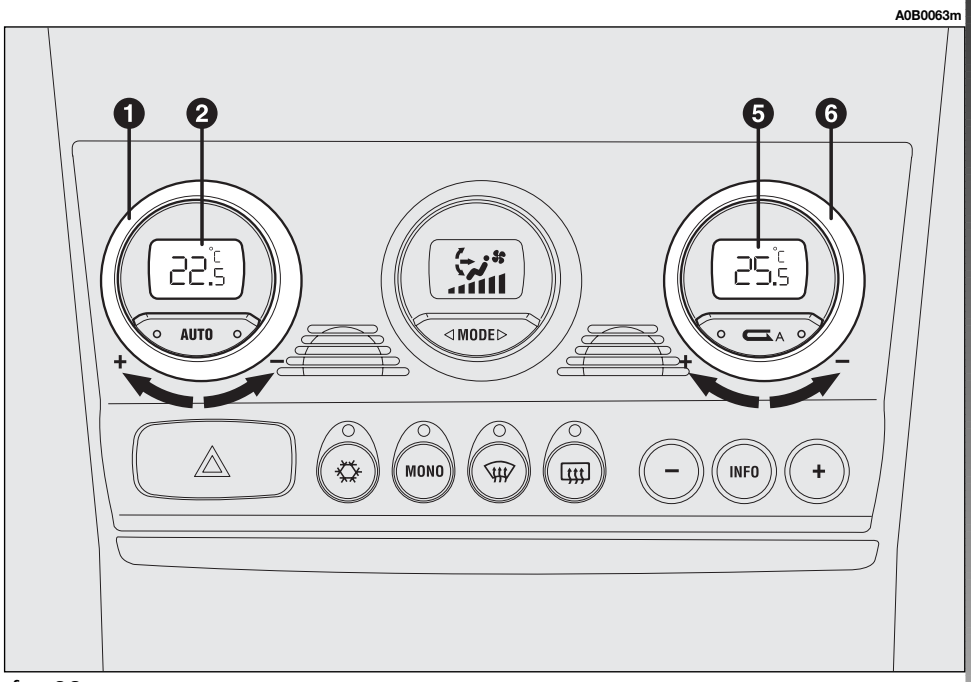

fig. 92

Downloaded from www.Manualslib.com manuals search engine

HI function (highest heating power - fig. 93)

It is switched on by setting a temperature of more than 32.5°C on the display, and can be switched on independently from the driver's or passenger's side, or both of them; this setting brings the system to the "one-zone" mode and is shown by both displays.

This functions can be switched on when you wish to heat the passenger compartment as quickly as possible, by taking the greatest advantage from the system potential.

The function uses the maximum temperature of the heating fluid, whereas air distribution to feet and 5th fan speed.

With the function switched on, however, all the manual settings can be made.

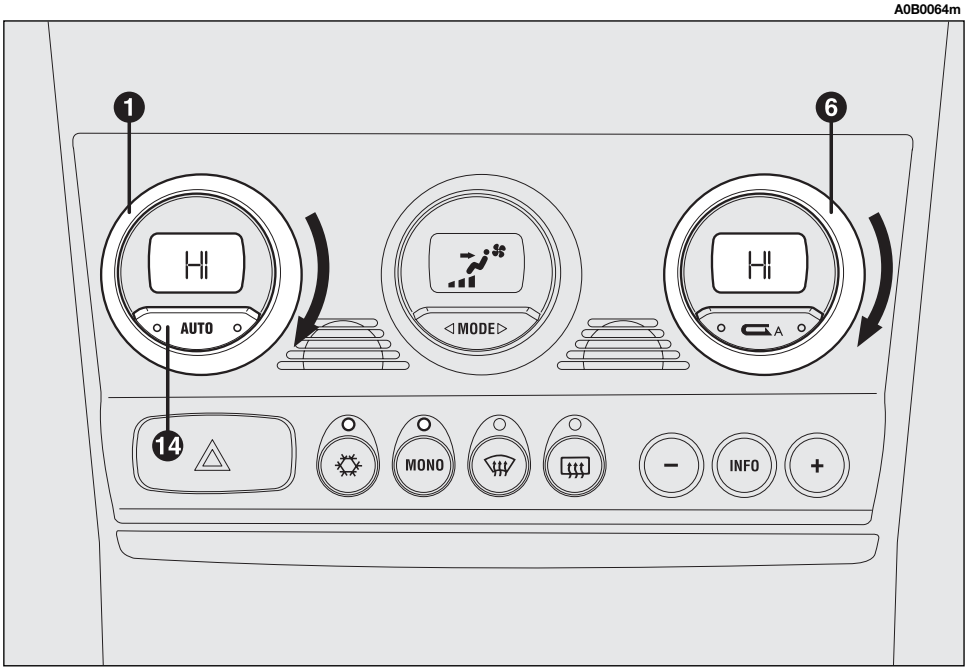

fig. 93

To switch the function off, you only need to turn the ring of a knob (**1**) or (**6**) of the temperature set to a value lower than 32.5°C; the opposite display will show 32.5°C.

By pressing button (**14**) **AUTO**, the display indicates a temperature of 32.5°C and falls within an operating condition with automatic temperature control.

Downloaded from www.Manualslib.com manuals search engine

LO function (highest cooling power - fig. 94)

It is switched on by setting a temperature lower than 16.5°C on the display; this setting is shown by both displays.

This function can be switched on when you wish to cool the passenger compartment as quickly as possible, by taking the greatest advantage from the system potential.

The function cuts off air heating, switches on both internal air recirculation (to prevent hot air from entering the compartment) and the climate control compressor, brings air distribution to ➡ and 5th fan speed.

With the function switched on, however, all the manual settings can be made.

To switch the function off, you only need to turn the ring of a knob (**1**) or (**6**) of the temperature set to a value greater than 16.5°C; the opposite display will show 16.5°C.

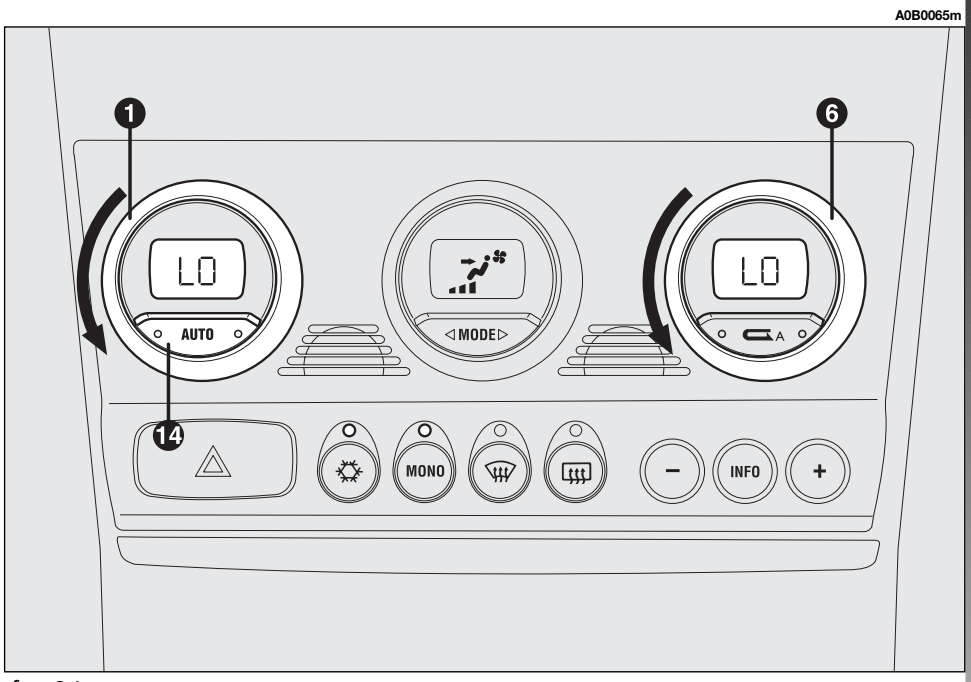

fig. 94

By pressing button (**14**) **AUTO** the display indicates a temperature of 16.5°C and falls within an operating condition with automatic temperature control.

Downloaded from www.Manualslib.com manuals search engine

MONO BUTTON FOR ALIGNMENT OF THE TEMPERATURES SET (fig. 95)

By pressing button (**11**) **MONO** the passenger's side temperature automatically aligns with that on the driver's side and, therefore, the same temperature can be set for both areas by simply turning the ring of knob (**1**), on driver's side.

This function is provided to facilitate temperature adjustment inside the entire passenger compartment when only the driver is on board.

Separate operation of set temperatures is automatically restored when the passenger operates the ring of knob (**6**) or by pressing button (**11**) **MONO**.

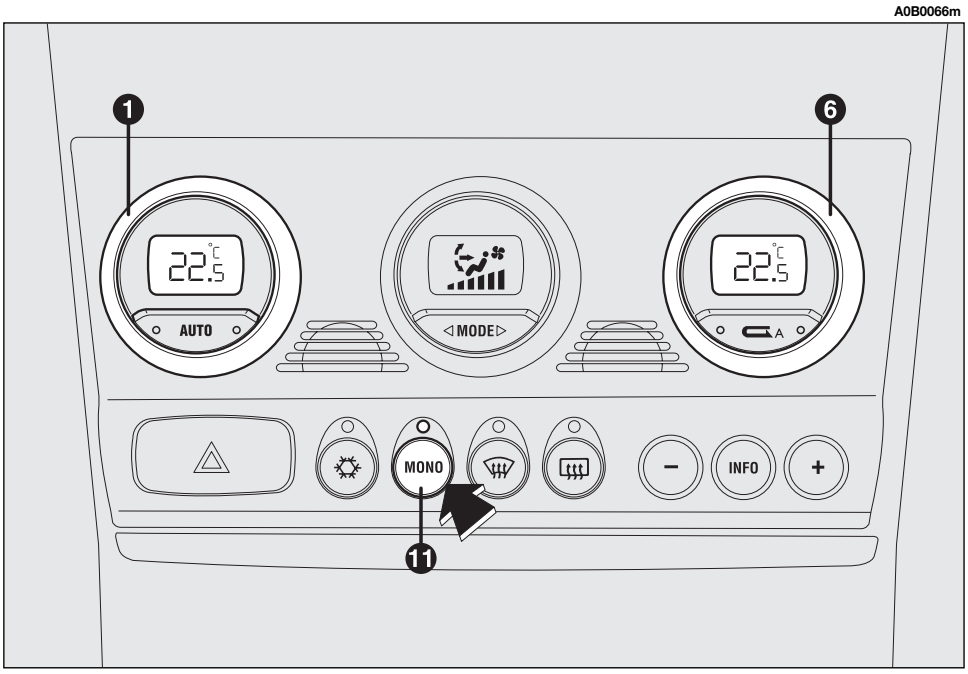

fig. 95

Downloaded from www.Manualslib.com manuals search engine

FAN SPEED ADJUSTMENT KNOB (fig. 96-97)

Turning the ring of knob (**3**), clockwise or counterclockwise will cause the fan speed - and, therefore, the amount of air flowing into the passenger compartment - to increase or decrease, respectively; the 16 speeds that can be selected are displayed by a bar (every 3 clicks), up to a maximum of 6 illuminated bars:

— max. fan speed = all bars lit;
— min. fan speed = one bar lit.

The fan can be cut off (all bars off) only if the climate control compressor has been switched off by pressing button (**12**) ❄. To resume automatic fan speed control after a manual setting has been made, press button (**14**) **AUTO**. By fully turning the ring of knob (**3**) counterclockwise, the system will be turned off, with the following situation: display (**2**) OFF; display (**5**) OFF; central display (**4**) OFF and left-hand led available on internal air recirculation button (**7**) ON and both led on **AUTO** button OFF.

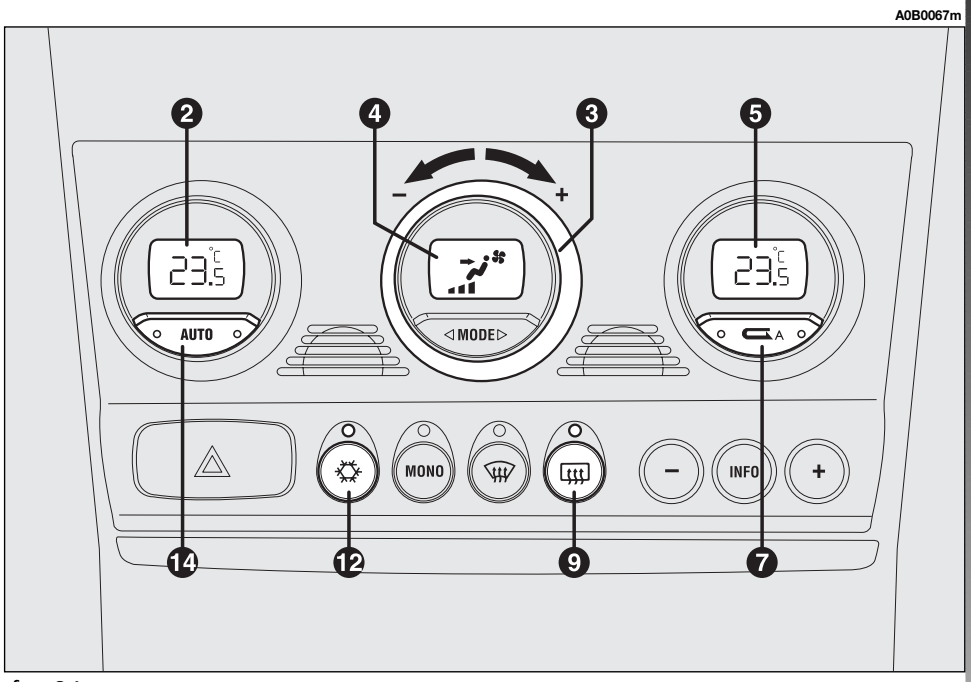

fig. 96

IMPORTANT By pressing the internal air recirculation button (**7**), it is possible to let external fresh air into the passenger compartment.

Downloaded from www.Manualslib.com manuals search engine

To turn the system on again, you only need to turn the ring of knob (**3**) clockwise, or press any button, except the internal air recirculation button (**7**) and rear window heater button (**9**); this operation resumes all the operating conditions previously stored in the memory.

IMPORTANT After exiting the condition **OFF**, the internal air recirculation is resumed to the condition preceding the switching off.

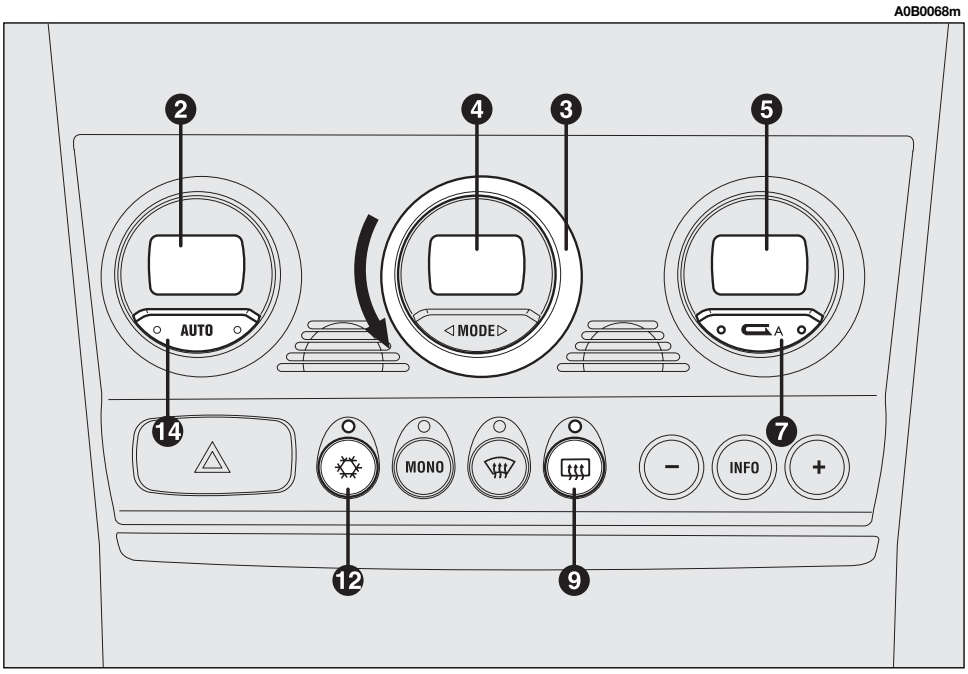

fig. 97

Downloaded from www.Manualslib.com manuals search engine

AIR DISTRIBUTION SELECTION BUTTON (fig. 98)

By pressing button **MODE** (**8**) repeatedly, you can manually choose one of the five possible modes:

➡ Flow of air to the dashboard centre and side outlets and rear outlet.

⬇➡ Splitting of the air flow between the vents to the lower part of the passenger compartment (warmest air) and the dashboard centre and side outlets and the rear outlet (coolest air). This air flow distribution is particularly useful in spring and autumn, when the sun is shining.

⬇ Air flow towards the front and rear lower part of the passenger compartment. Due to the natural tendency of heat to spread upwards, this type of distribution allows heating of the passenger compartment in the shortest time, also giving a prompt feeling of warmth to the coldest parts of the body.

A0B0069m

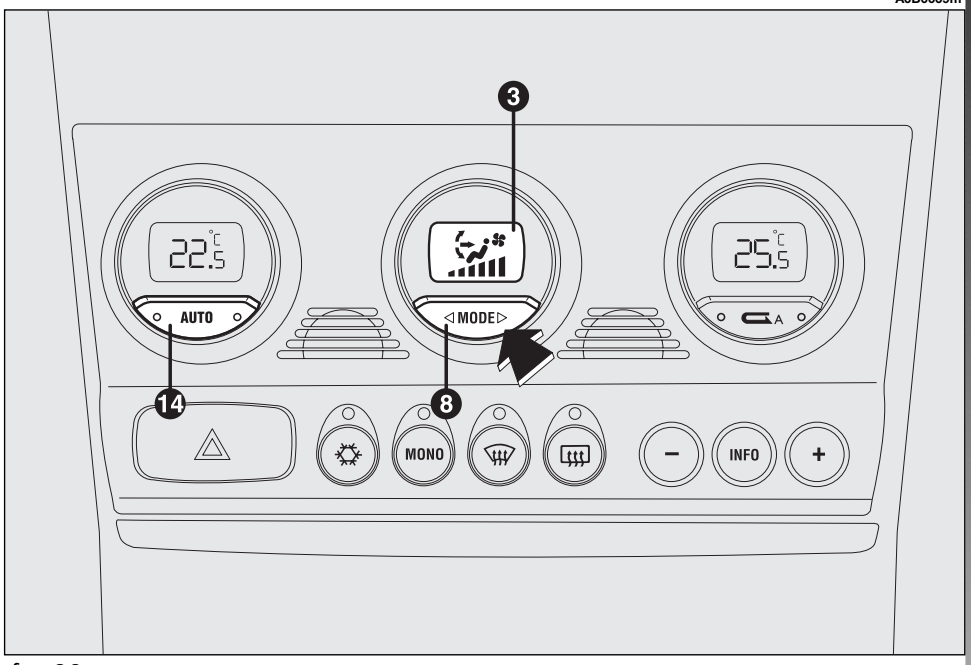

fig. 98

⬆⬇ Splitting of the air flow between the windscreen and side window defrosting/demisting vents and the lower part of the passenger compartment. This type of air distribution allows satisfactory heating of the passenger compartment while preventing possible misting of the windows.

⬆ Air flow to the windscreen and front side window vents to demist or defrost them.

To resume automatic air distribution control after a manual selection, press button (**14**) **AUTO**.

Downloaded from www.Manualslib.com manuals search engine

CLIMATE CONTROL COMPRESSOR ON/OFF ENABLE BUTTON ❄ (fig. 99)

Pressing button (**12**) ❄ enables the turning on of the climate control compressor. This condition is shown by the lighting up of the led placed on the button itself.

When the climate control compressor is turned off, the leds on buttons (**14**) **AUTO** and (**12**) ❄ go off; automatic inside air recirculation control is also excluded (both leds off on button **7**) which always stays off to prevent window misting; in any case, the automatic operation of inside air recirculation can be resumed (though it is not recommended) by pressing button **7** .

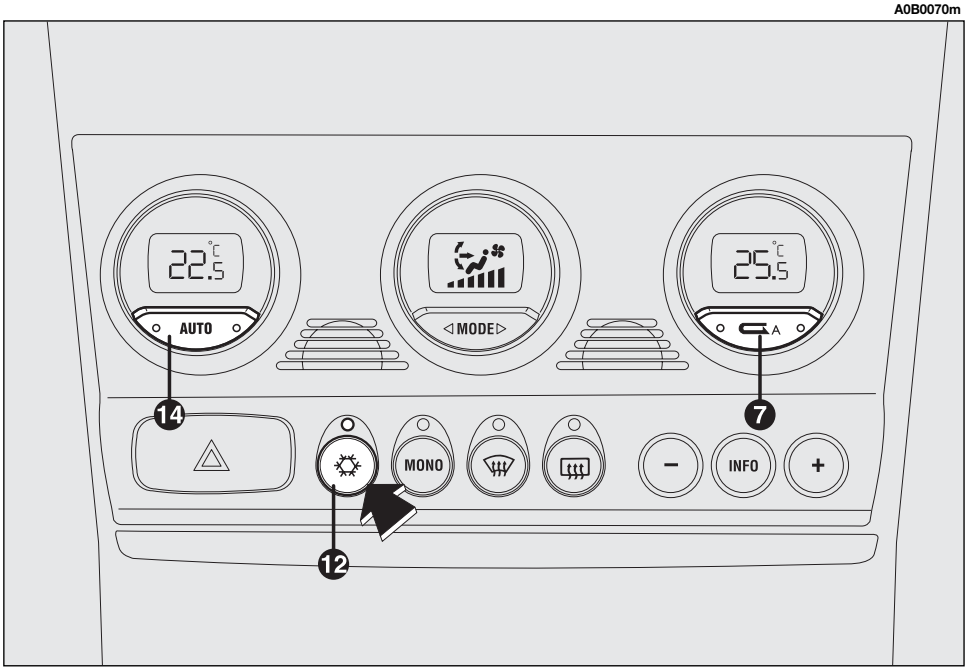

fig. 99

Downloaded from www.Manualslib.com manuals search engine

When the climate control compressor is off, it is not possible to admit air to the passenger compartment with a temperature below the outside temperature; in this case, the value flashes on the display concerning the temperature that cannot be reached and the left led on button (**14 AUTO** - **fig. 100**) goes off.

The switching off of the climate control compressor remains in storage even when the engine has been stopped. To resume automatic control for switching on the climate control compressor, press button (**12**) ✲ again, the button led will turn on, or press button (**14**) **AUTO**; in which case, the other manual settings set will be cancelled.

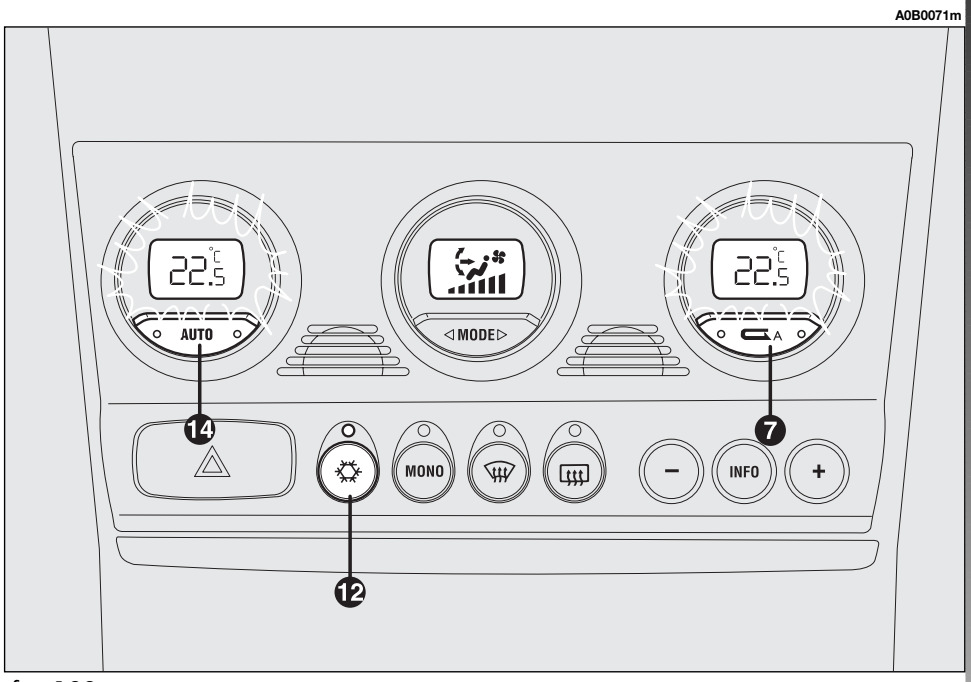

fig. 100

WARNING

Operation of the climate control compressor is necessary for cooling and dehumidifying the air; it is advisable to keep this function always on, to prevent window misting problems.

Downloaded from www.Manualslib.com manuals search engine

INSIDE AIR RECIRCULATION ON/OFF BUTTON (fig. 101)

Inside air recirculation is controlled according to three operating logics:

— automatic control, indicated by the turning on of the right led on the button;

— forced switching on (inside air recirculation always on), indicated by the turning on of the left led on the button (and by the right led going off at the same time);

— forced switching off (inside air recirculation always off, with air inlet from the outside), indicated by the turning off of both leds.

These operating conditions are obtained by pressing in sequence the inside air recirculation button (**7**).

When inside air recirculation is controlled automatically by the system, the right led on the air recirculation button (**7**) stays on all the time and the left led shows the air recirculation condition:

ON = air recirculation operating;

OFF = air recirculation off.

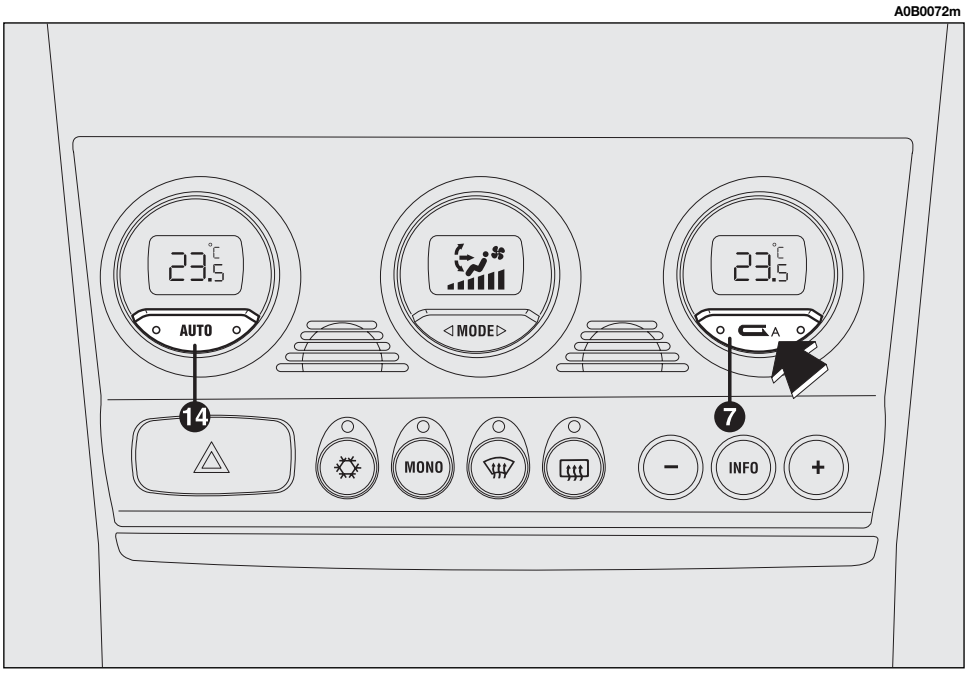

fig. 101

If inside air recirculation has been switched on or off manually, the led on button (**14**) **AUTO** turns off.

In automatic operation, inside air recirculation is switched on automatically when the anti-pollution sensor detects the presence of polluted air, for instance in cities, queues, tunnels, and when the windscreen wash/wiper is operated (with the characteristic smell of spirit).

Downloaded from www.Manualslib.com manuals search engine

WARNING

With the outside temperature below 2°C the climate control compressor is unable to work. It is therefore inadvisable to use the inside air recirculation function with low outside temperature as windows may mist over quickly.

WARNING

The inside air recirculation function makes it possible to reach the required "heating" or "cooling", conditions faster. It is however inadvisable to use it on rainy/cold days as it would considerably increase the possibility of the windows misting inside, especially if the climate control system is off.

WARNING

In certain weather conditions (e.g. outside temperature around 0°C) and with automatic air recirculation control on, mist may form on the windows. In this case press the inside air recirculation button (7), to switch off recirculation (leds on button off) and if necessary increase the flow of air to the windscreen.

WARNING

It is advisable to turn on the inside air recirculation system in queues or tunnels to avoid admitting polluted air from outside. The prolonged use of this function should however be avoided, especially with several persons on board, to avoid the possibility of the windows misting inside.

Downloaded from www.Manualslib.com manuals search engine

BUTTON AUTO AUTOMATIC OPERATION (fig. 102)

When button (**14**) **AUTO** is pressed, the system automatically regulates the amount and distribution of the air admitted into the passenger compartment, clearing all the previous manual settings.

This condition is indicated by the lighting of both button leds.

When the right led, on button (**14**) **AUTO**, is OFF, it indicates that one or several manual operations have been carried out and, therefore, that automatic control is not complete (except for temperature control, which is always automatic) indicated by the left led on.

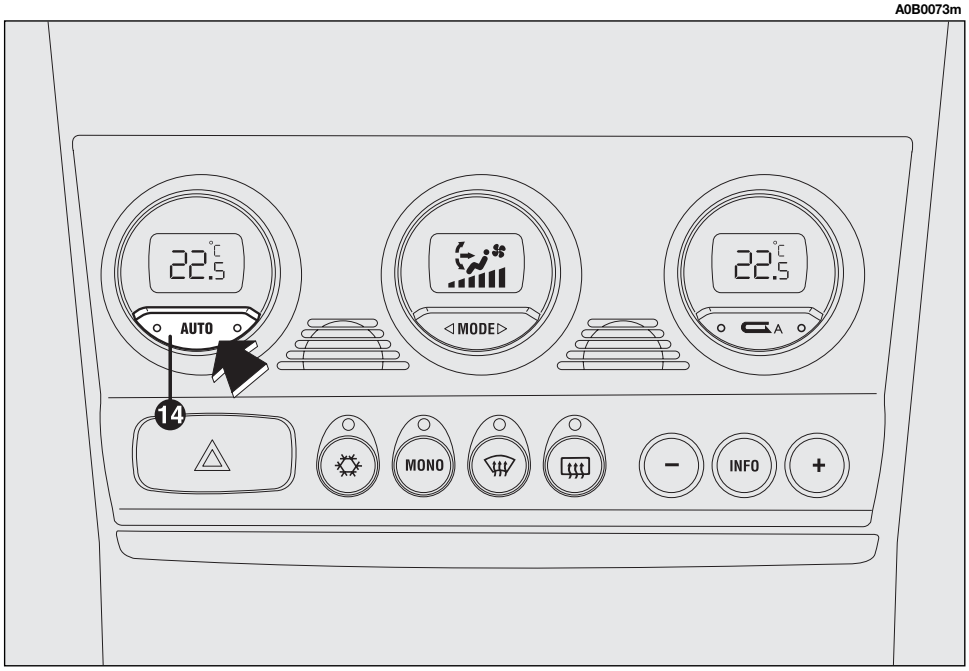

fig. 102

Downloaded from www.Manualslib.com manuals search engine

QUICK FRONT WINDOW DEMISTING/DEFROSTING BUTTON

(MAX-DEF function) (fig. 103)

Pressing button (**10**) the climate control automatically activates timed operation of all the functions needed to quicken demisting/defrosting of the windscreen and front side windows, i.e.:

— it turns on the climate control compressor;

— switches off inside air recirculation, if on (both leds off);

— sets the maximum air temperature (**HI**) on both displays (**2**) and (**5**);

— operates the fan at a predefined speed;

— directs the flow of air towards the windscreen and front side window vents;

— turns on rearscreen heating and, if present, the wing mirror coils.

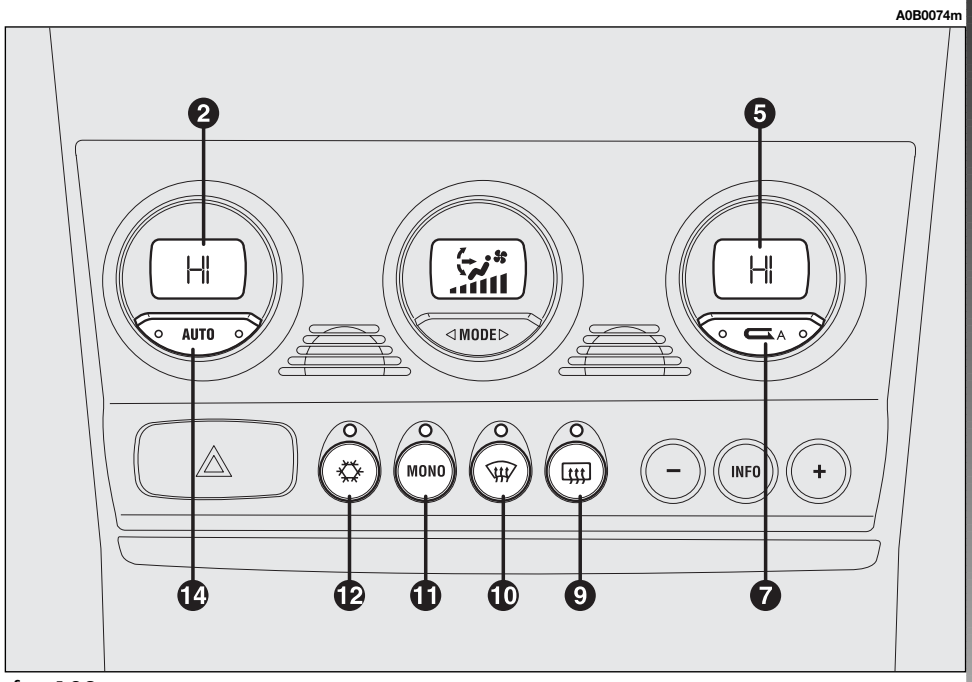

fig. 103

When the maximum demisting/defrosting function is on, the led on button (**10**), the led on the rearscreen heating button (**9**) and the led on button (**12**) come on; at the same time the leds on button (**7**) go out.

IMPORTANT If the engine is not warm enough, the function will not engage the predefined fan speed immediately, to limit the flow to the passenger compartment of air that is not warm enough to demist the windows.

Downloaded from www.Manualslib.com manuals search engine

When the maximum demisting/defrosting function is on, the only manual operations possible are manual adjustment of the fan and switching rearscreen heating off.

Pressing one of the following buttons: (**10**) , (**7**) , (**11**) **MONO**, (**14**) **AUTO** or (**12**) the system switches off the maximum demisting/defrosting function, resuming the system operating conditions prior to turning it on, in addition to activating the last function required, if any.

WING MIRROR AND REARSCREEN DEFROSTING/ DEMISTING BUTTON (fig. 104)

Pressing button (**9**) , turns on demisting/defrosting of the rearscreen and, if present, the wing mirror coils.

The activation of this function is shown by the turning on of the led on the button.

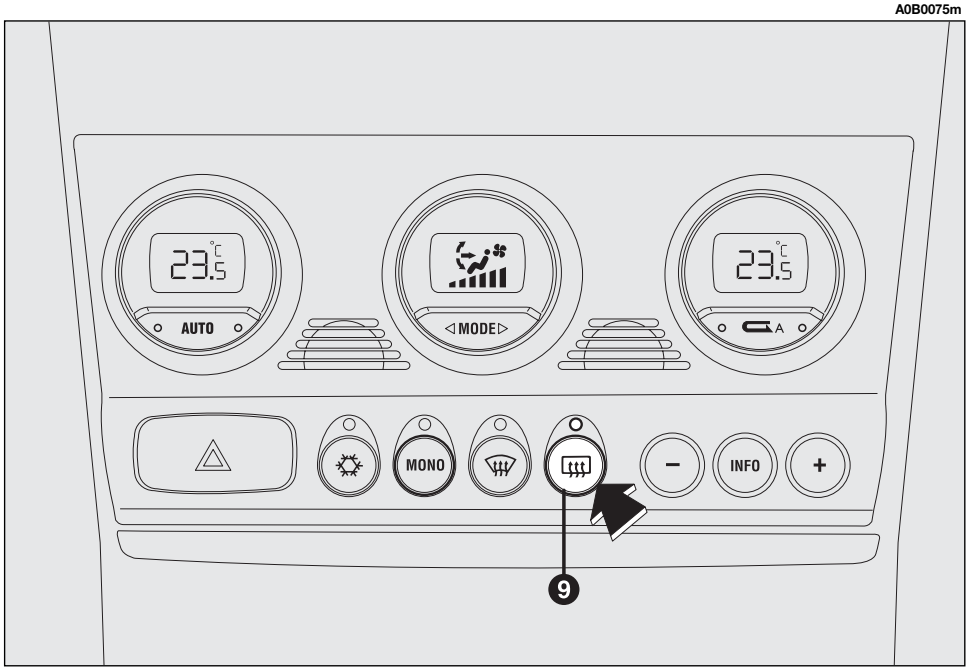

fig. 104

IMPORTANT Rear heated window manual on/off control prevails over automatic activation decided by the climate control system control unit.

This function is timed and switches off automatically after 20 minutes, or pressing the button again; the function is also switched off when the engine is stopped and will not be switched on again the next time the engine is started.

Downloaded from www.Manualslib.com manuals search engine

IMPORTANT The system turns on rearscreen heating automatically if the temperature is below 3°C.

IMPORTANT Do not apply stickers on the inside of the rearscreen over the heating filaments to avoid damage that might cause it to stop working properly.

IMPORTANT When reconnecting the negative battery cable after having disconnected it, wait for 2 minutes before turning the key to enable the climate control system to reset actuator strokes properly.

POLLEN FILTER

This filter has the specific capability of combining the mechanical filtering of the air with an electrostatic effect so that the outside air admitted to the passenger compartment is purified and free from particles such as dust, pollen, etc.

In addition to the above, it also effectively reduces the concentration of pollutants.

The filtering action takes place under all air inlet conditions and it is clearly most effective with the windows shut.

Have the conditions of the filter checked by Alfa Romeo Authorized Services at least once a year, preferably t the onset of summer.

If the vehicle is used mainly in polluted or dusty areas it should be checked and if necessary replaced, at shorter intervals.

Failure to replace the filter may considerably reduce the effectiveness of the climate control system up to blocking the air flow from the outlets and vents.

Downloaded from www.Manualslib.com manuals search engine

CONTROLS

TAILGATE OPENING (fig. 105)

To open the boot pull the lever (**A**) at the side of the driver's seat.

WARNING

Do not operate the boot release lever with the car on the move.

HAZARD WARNING LIGHTS (fig. 106)

They are switched on by pressing button (**A**), regardless of the position of the ignition key.

When the hazard warning lights are switched on, the switch itself begins to flash together with the direction indicator warning lights and the emergency indicator on the instrument panel. This functions is switched off by pressing the button again.

WARNING

Use of the hazard warning lights is ruled by the Highway Code of the country in which the car is used. Observe regulations.

FRONT FOGLIGHTS (fig. 107)

These come on when button (**A**) is pressed and when the external lights are already on.

The warning light will light up on the instrument panel.

By turning the ignition key to **STOP**, the fog lights are turned off automatically and do not come on the next time the engine is started without pressing button (**A**).

Press the button (**A**) again to switch the front foglights off.

IMPORTANT The front foglights should be used in compliance with the local traffic laws.

A0B0042m

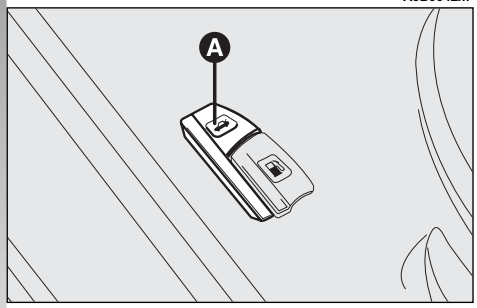

fig. 105

A0B0036m

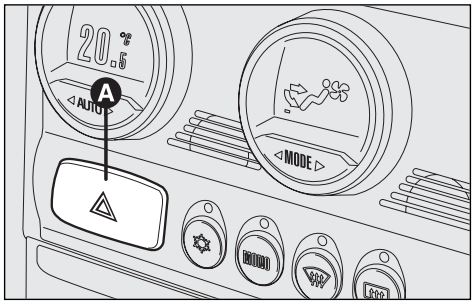

fig. 106

A0B0285m

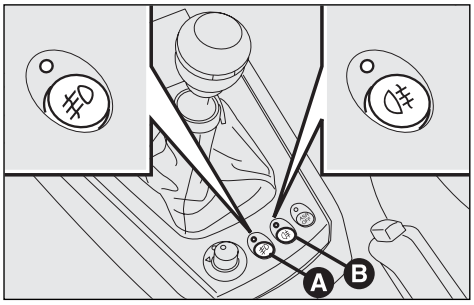

fig. 107

Downloaded from www.Manualslib.com manuals search engine

REAR FOG GUARDS (fig. 107)

These are turned on, with the dipped beam headlamps or fog lights on, by pressing button (**B**).

At the same time, warning light on the instrument cluster lights up.

By turning the ignition key to **STOP**, the fog guards are automatically turned off and they do not come on the next time the engine is started unless button (**B**) is pressed.

Press button (**B**) to turn them off.

IMPORTANT Always use the rear fog guards in accordance with local regulations in force.

DASHBOARD LIGHTING ADJUSTMENT (fig. 108)

When the outside lights are on, the dashboard lighting is adjusted by pressing button (**A**).

Each press of the button (**A**) cyclically selects one of the three lighting levels provided: low-medium-high.

INERTIAL FUEL CUT-OFF SWITCH (fig. 109)

This is an automatic safety switch which is triggered in the event of crash to interrupt the flow of fuel.

The message + symbol are shown on the Infocenter display when the fuel cut-off switch comes into operation (see "Infocenter Display" in this section) and by the door unlocking.

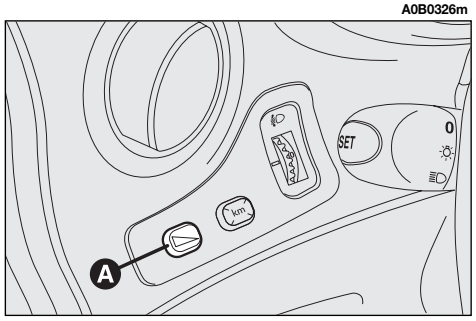

fig. 108

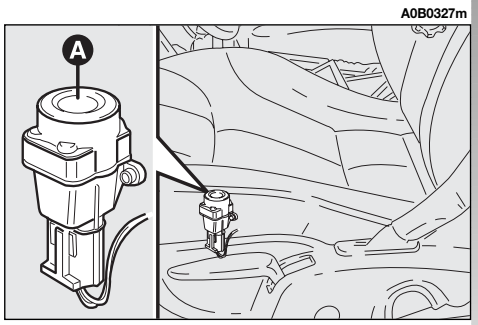

fig. 109

Downloaded from www.Manualslib.com manuals search engine

WARNING

If a smell of fuel is noted following an accident, or the fuel system is leaking, to avoid the risk of fire do not reset the switch.

Inspect the care carefully to make sure that there are no fuel leaks, for instance in the engine compartment, under the vehicle or near the tank area.

If no leaks are found and the vehicle can be restarted again, press button (**A**) to activate the fuel supply system.

After an impact, turn the ignition key to **STOP** to prevent battery running down.

OPENING THE FUEL FLAP (fig. 110)

The fuel tank flap is released from inside the car raising the front part of the lever (**A**).

HEADLIGHT CORRECTOR (fig. 111)

If the car is fitted with xenon headlights, beam aiming is electric and therefore control (**A**) on plate at the side of the steering column is not present.

The headlights should be aimed correctly depending on the vehicle load.

The control (**A**) on the plate at the side of the steering column can be moved to four positions corresponding to the vehicle loads given below:

Position **0** : 1 or 2 people occupying front seats, full fuel tank, on-board equipment present;

Position **1**: 5 people on-board;

Position **2** : 5 people on-board, luggage compartment full (50 kg approximately);

Position **3** : Driver and 300 kg in luggage compartment.

A0B0044m

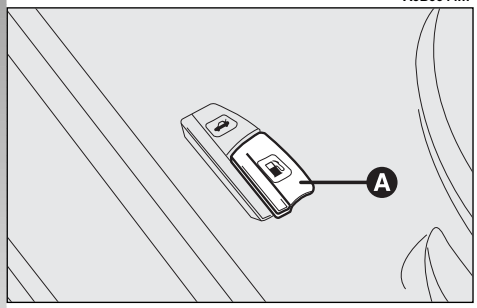

fig. 110

A0B0240m

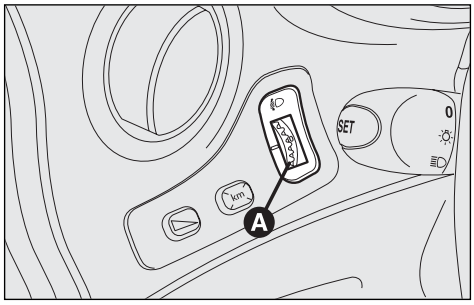

fig. 111

WARNING

Check the positioning of the headlight beams every time you change the load to be carried.

Downloaded from www.Manualslib.com manuals search engine

HAND BRAKE (fig. 112)

The hand brake lever is located between the two front seats.

To operate the brake when the vehicle is "stationary", pull the lever (**A**) upwards until the required braking action is obtained.

When the ignition key is in the **MAR** position, the (!) warning light will come on on the instrument panel.

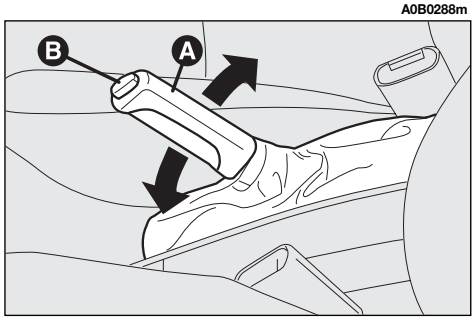

fig. 112

WARNING

The wheels should be locked after a few clicks of the hand brake lever. If this does not occur, contact Alfa Romeo Authorized Services to have the hand brake adjusted.

To release the hand brake:

— slightly lift the lever (**A**) and press the release button (**B**);

— holding the button down lower the lever. The (!) warning light on the instrument panel will go out.

To prevent the car from moving accidentally, keep the brake pedal pressed when engaging the handbrake.

IMPORTANT The handbrake lever (**A**) is fitted with a safety device which prevents the brake from being released when, if the lever is pulled, button (**B**) is pressed. Therefore, to release the brake, in addition to pressing button (**B**), it is also necessary to pull lever (**A**) further upwards to release the safety device, then lower the lever completely.

Downloaded from www.Manualslib.com manuals search engine

GEARSHIFT LEVER (fig. 113)

The car is fitted with a six speed mechanical gearbox.

The position of the individual gears is shown by the pictogram on the gearshift lever knob.

When changing gear, always fully depress the clutch pedal. Before engaging reverse gear (**R**) wait for the car to be stationary.

For versions fitted with six speed gearbox, to engage reverse gear (**R**), raise the ring under the grip (with the fingers of the same hand holding the lever).

After engaging reverse gear, release the ring. It is not necessary to raise the ring on the lever when shifting from reverse to another gear.

A0B0408m

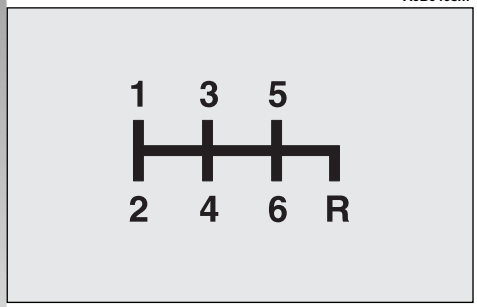

fig. 113

IMPORTANT Reverse gear can only be engaged with the vehicle completely stopped. With the engine running, before engaging reverse gear it is necessary to wait for at least 3 seconds with the clutch pedal fully pressed, to avoid grating and the possibility of damaging the gears.

WARNING

To change gear smoothly, the clutch pedal must be fully depressed. Therefore, there should be no hindrances under the pedal unit. Make sure that any mats are well laid and do not interfere with the pedals.

Do not drive with your hand resting on the gearshift lever, since the applied pressure, though slight, may, with the passing of time, damage parts inside the gear.

Downloaded from www.Manualslib.com manuals search engine

SELESPEED GEARBOX
(optional for versions/markets where applicable)

Car can be supplied with a mechanical gearbox with electronic control, called "Selespeed".

The Selespeed considerably simplifies the use of the car, it reduces driving fatigue in town or when frequent gearshifting is necessary, but at the same time it assures brilliant performance.

IMPORTANT To be able to use the Selespeed correctly, this chapter should be read in full to understand the correct, permissible operations to be carried out right from the start.

This device comprises a conventional mechanical gearbox to which an electronically-operated electro-hydraulic device has been added which automatically controls the clutch and gear engagement.

The clutch pedal has been eliminated and the vehicle moves off using only the accelerator pedal.

Gearshifting takes place through a floating control lever (**A-fig. 114**) with only one stable central position. Using this lever it is possible to request increase/decrease of the ratio of the gear engaged and/or engagement of reverse gear (**R**) or neutral (**N**).

There are also two levers on the steering wheel spokes (**fig. 115**) through which, only with the car on the move (with speed above 0.5 km/h), it is possible to shift gear up or down.

A0B0448m

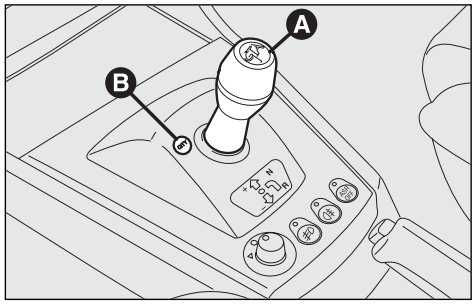

fig. 114

A0B0455m

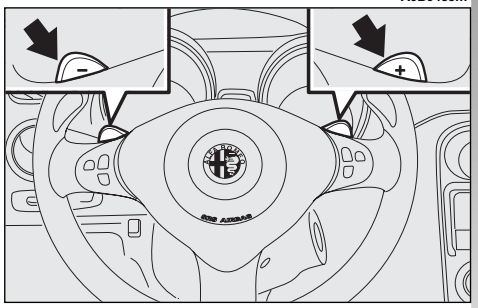

fig. 115

Downloaded from www.Manualslib.com manuals search engine

The gearbox can work in two operating modes:

— the first is semiautomatic(then called **MANUAL**), in which the driver directly requests gearshifting through the lever on the centre console or pressing the buttons at the steering wheel;

— the second is automatic, called **CITY** (mode selectable with the specific button **B-fig. 114**, the **CITY** sign appears on the display **fig. 116** fitted on rev-counter), in which the system decides directly when to shift gear.

A0B0402m

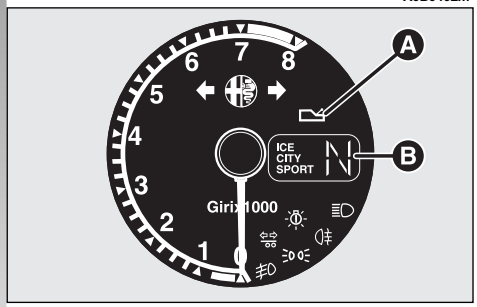

fig. 116

With the gearbox in the **CITY** mode it is still possible to carry out manual gearshifting, both using the gear lever and the steering wheel controls. The gearbox remains in the **CITY** mode.

The gear engaged (**fig. 116**) is always signalled on the display regardless of the selected mode.

N = neutral;

1 = first gear;

2 = second gear;

3 = third gear;

4 = fourth gear;

5 = fifth gear;

6 = sixth gear;

R = reverse.

Failures of Selespeed gearbox are signalled to the driver through a warning light (**A-fig. 116**) accompanied by an acoustic signal.

Downloaded from www.Manualslib.com manuals search engine

SYSTEM ACTIVATION

IMPORTANT Opening the driver's door, the Selespeed starts the hydraulic part of the system to prepare it for the engine to be started. This function (noted by the turning of the electric pump) is deactivated after 10 openings/closings of the door that are not followed by actual system activation using the ignition key.

Turning the ignition key to **MAR**, all the segments of the display (**B-fig. 116**), the gearbox failure warning light (**A-fig. 116**) and the word **CITY**light up. After about one second, the display indicates the gear engaged (**N**, **1**, **2**, **3**, **4**, **5**, **6**, **R**); from this moment, the Selespeed system accepts gearshift commands.

IMPORTANT If after 10 seconds the display segment do not display the gear engaged or the failure warning light stays on, turn the ignition key to **STOP** and wait for the display to go off, then repeat the system activation procedure. If the fault persists, contact Alfa Romeo Authorized Services

OPERATION WITH THE ENGINE OFF

IMPORTANT Before operating the gearshift control lever, always check the gear engaged on the display (**N**, **1**, **2**, **3**, **4**, **5**, **6**, **R**).

When the engine is off and the vehicle is stationary, it is possible to engage all the gears.

With the vehicle stationary and with the brake pedal pressed, requests to shift gear are accepted **only** if they are carried out through the control lever on the central console.

To request gearshifting, in addition to keeping the brake pedal pressed it is necessary to:

— to increase gear (**+**) (**fig. 117**) push the lever "forwards" (if the car is in first gear this shifts to second, if it is in second gear it goes to third and so on up to fifth). If the system is in neutral (**N**) or reverse (**R**) the forward movement on the lever causes engagement of first gear (**1**).

— to shift down (**—**) (**fig. 117**) push the lever backwards (if the car is in fifth gear it moves to fourth, if fourth gear is engaged it shifts to third and so on down to first).

A0B0449m

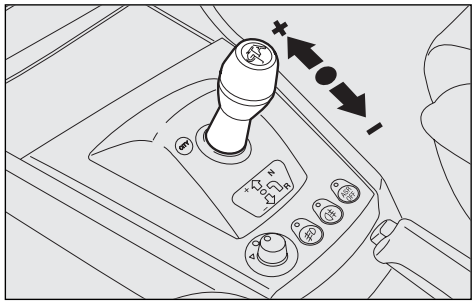

fig. 117

A0B0450m

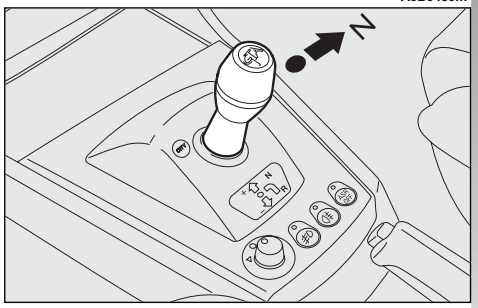

fig. 118

Downloaded from www.Manualslib.com manuals search engine

To put the gearbox in neutral (**N**), starting from the condition with the vehicle stationary and the brake pedal pressed, it is necessary to move the gearshift control lever to the right (**fig. 118**).

From any gear (**N**, **1**, **2**, **3**, **4**, **5**, **6**) and with the vehicle practically at a standstill, it is possible to request engagement of reverse gear, pushing the lever to the right and then backwards (**fig. 119**). If the vehicle is on the move, the request is not accepted; wait for the car to stop and then request reverse gear engagement again

IMPORTANT Once a gear has been shifted it is necessary to release the gearshift control lever immediately after making the request. A prolonged action (over 10 seconds) causes automatic shifting to **CITY**; previous conditions are restored when releasing the lever.

IMPORTANT If wanting to leave the car parked on a sloping road with a gear engaged to keep it braked, it is necessary to check that the Infocenter display shows the new gear engaged and then wait for 1 to 2 seconds before releasing the brake pedal to allow complete clutch engagement.

A0B0451m

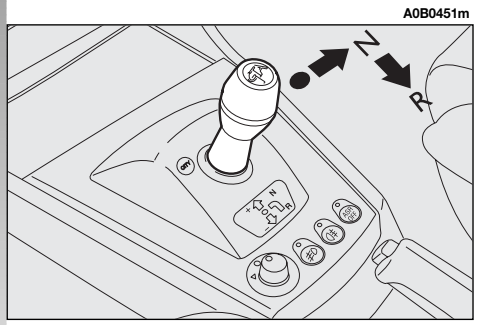

fig. 119

Downloaded from www.Manualslib.com manuals search engine

STARTING THE ENGINE

The engine can be started with the gear engaged or in neutral (**N**), provided that the brake pedal is pressed down.

IMPORTANT Keep the brake pedal pressed during the starting operation. As the brake pedal stiffens if it is pressed repeatedly with the engine off, in this situation, to allow the engine to be started, it is necessary to increase the pressure exerted on the pedal itself.

After starting, the gearbox automatically sets to neutral, the display shows the letter (**N**) and the system selects the operating mode stored before switching off.

WARNING

If the engine fails to start with the gear engaged, the driver is alerted of the potentially dangerous situation due to the fact that the gearbox has automatically set to neutral by the buzzer and the display on the rev counter.

TURNING THE ENGINE OFF AND SYSTEM DEACTIVATION

Turning the ignition key to **STOP** the engine switches off but the Selespeed system still remains active, waiting for the vehicle to stop completely. After about 2 - 4 seconds from when the key has been turned to the **STOP** position, the hydraulic part is deactivated; the Selespeed system is only deactivated at this point.

The gear selected before turning the engine off remains engaged.

If the engine stops with the gearbox in neutral (**N**), the buzzer draws the attention of the driver so that the vehicle can be put in safety conditions engaging the first gear (**1**) or reverse (**R**). In this case, it is necessary to turn the ignition key to **MAR** and with the brake pedal pressed, engage first gear (**1**) or reverse (**R**).

WARNING

NEVER leave the car with the gearbox in neutral (N).

WARNING

Never remove the key when the car is on the move, because in addition to the fact that the Selespeed system would not work properly until stopping the car, the steering wheel would automatically lock at the first turn.

WARNING

It is absolutely necessary to turn off the engine consequently deactivating the Selespeed system keeping the brake pedal pressed: release the pedal ONLY when the display on the rev counter goes off.

Downloaded from www.Manualslib.com manuals search engine

MOVING OFF

With the engine running and the vehicle stationary, the gears that can be engaged for moving off are only first (**1**), second (**2**) or reverse (**R**).

To engage them it is possible to use the control lever on the centre console, with the brake pedal pressed, as the levers on the steering wheel allow gear engagement only over 10 km/h.

IMPORTANT Reverse gear (**R**) can be engaged from each of the following other ratios: neutral (**N**), first gear (**1**) or second gear (**2**). If the car is on the move, the request is not accepted; it is necessary to wait for the car to be completely stopped and then request reverse (**R**) again.

The driver is informed of the reverse gear engaged condition by the intermittent sound of the buzzer as well as by the display on the rev counter.

IMPORTANT If while shifting from reverse (**R**)/first gear (**1**) to neutral (**N**)/first gear (**1**) sticking occurs on the first gear, the system automatically engages second gear (**2**).

This should not be considered as a fault as it is part of the operating logic. For the same reason, in the event of sticking on reverse, the system commands partial clutch closing to allow engagement of the gear; in this case engagement of reverse gear (**R**) will be less comfortable.

Moving off of the vehicle is obtained:

1) releasing the brake pedal;

2) gradually operating the accelerator pedal.

The vehicle pick-up torque is higher the more the accelerator pedal is pressed.

With ASR off (through the relevant ASR OFF button), starting will be more "brilliant".

WARNING

After a request to shift gear with the vehicle stationary, before pressing the accelerator pedal to make the car start, the driver must always check that the gear engaged shown on the display is the one required.

IMPORTANTS

— With the vehicle stationary and a gear engaged, always keep the brake pedal pressed until you decide to move off;

— in prolonged stops with the engine running it is advisable to keep the gearbox is neutral;

— when the car is parked on a slope, do not use the pick-up manoeuvre to keep the vehicle stopped; use the brake pedal and work on the accelerator pedal only when you decide to move off;

— use second gear **only** when necessary to obtain better control of pick-up in low speed manoeuvres;

— if, with reverse gear engaged, you need to engage first gear or vice versa, shift gear only when the car is completely stationary and with the brake pedal pressed.

Downloaded from www.Manualslib.com manuals search engine

Though strongly inadvisable, if due to unforeseen circumstances when driving downhill the car is allowed to travel with the gearbox in neutral (**N**), when the engagement of a gear is requested, the system automatically engages the best gear to allow transmission of the torque to the wheels in relation to the speed of the car.

Downhill with the gear engaged and the accelerator released (if the vehicle is travelling), if a certain pre-established speed is exceeded, the system automatically engages the clutch to provide adequate engine braking.

Due to safety reasons, the Selespeed system activates the buzzer when:

— clutch overheating occurs during vehicle starting; in this case, it is necessary to "force" moving off avoiding hesitations or to release the accelerator and use the brake pedal to park the vehicle if the car is on a slope;

— the car moves in the opposite direction to the gear engaged, (e.g.: vehicle moving forward with reverse engaged); in this situation it is necessary to stop the vehicle and keeping the brake pedal pressed, engage the gear correctly.

Still for safety reasons, when the vehicle is stationary, with the engine started and gear (**1**), (**2**) or (**R**) engaged, the system activates the buzzer and shifts to neutral (**N**) automatically when:

— there is no action on the accelerator and/or brake pedal for at least 3 minutes;

— the brake pedal is pressed for over 10 minutes;

— the driver's door is opened and the accelerator and brake pedal are not pressed for at least 1 second.

STOPPING THE CAR

To stop the vehicle, simply release the accelerator pedal and, if necessary, operate the brake pedal.

Regardless of the gear engaged and of the operating mode activated (**MANUAL** or **CITY**), the system automatically disengages the clutch and downshifts gear.

If you intend to move off again without having completely stopped the car, this way the most suitable gear ratio for re-accelerating will be available.

Stopping the vehicle, the system automatically engages first gear (**1**).

Downloaded from www.Manualslib.com manuals search engine

OPERATION

The gearbox can work in two operating modes:

— the first is semiautomatic (**MANUAL**), in which the driver directly decides when to shift gear;

— the second is completely automatic (**CITY**), in which the system decides directly when to shift gear according to the type of driving.

The **CITY** mode can be selected by pressing the specific button **CITY** on the gearbox lever knob; when this mode is selected, the CITY sign appears on the display fitted on rev counter.

SEMIAUTOMATIC OPERATION (MANUAL)

In the **MANUAL** operating mode the display on the rev counter shows the gear engaged.

In this operating mode, the decision to change gear is left to the driver who decides the most appropriate moment.

The requests to change gear can take place through:

— the control lever on the centre console (**A-fig. 120**);

— the levers on the steering wheel (**fig. 121**), which can be used only when the vehicle speed exceeds 10 km/h.

The **MANUAL** operating mode is set when, with the **CITY** mode selected, the **CITY** button (**B-fig. 120**) is pressed again, excluding the previously selected mode.

When shifting gear, releasing the accelerator pedal is not necessary because the Selespeed system directly controls the engine so as to:

— reduce and then increase the engine torque;

— adapt the engine speed to the new gear ratio engaged.

When downshifting, double de-clutching (acceleration of the engine to bring it to the speed necessary with the new gear ratio) is carried out automatically.

The move to neutral (**N**) command is accepted when the car speed exceeds 0.5 km/h.

The command to engage reverse gear (**R**) is accepted only if the car is stationary.

With the accelerator pedal pressed by over 60% of its stroke and with an engine speed of over 5,000 rpm, gearshifting becomes quicker.

A0B0448m

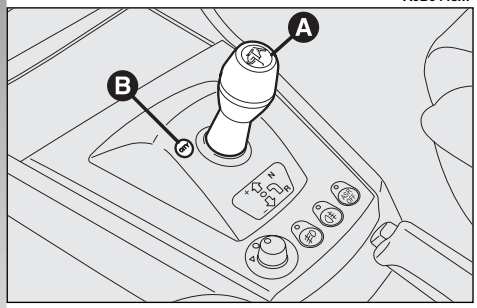

fig. 120

A0B0455m

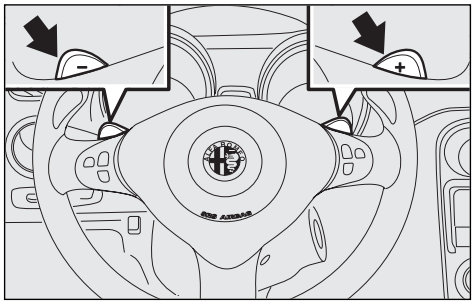

fig. 121

Downloaded from www.Manualslib.com manuals search engine

In the **MANUAL** mode there are some automatic/safety devices which make driving easier:

— when slowing down, the clutch is opened and the gear ratio is reduced automatically to be ready for possibly picking up speed again; if not, stopping the vehicle, first gear (**1**) will be engaged automatically;

— request to change gear that could take the engine above the maximum rpm or below the minimum permissible rpm are not accepted;

— if sticking occurs during the engagement of a gear, the system firstly tries to engage the required gear again and, if it is still not possible, it automatically engages the immediately higher one to avoid leaving the vehicle in neutral speed.

IMPORTANT It is advisable to wait for a gearshift to end before requesting another one, this will avoid multiple requests in quick succession.

AUTOMATIC OPERATION (CITY)

The **CITY** automatic operating mode is selected pressing the button (**A-fig. 122**), at the base of the gearshift lever.

In addition to the gear, the display on the rev counter will show the word **CITY**.

The system decides directly when gearshifting according to the engine running speed and the driving style.

Quickly releasing the accelerator pedal, the system does not engage a higher gear in order to maintain an adequate level of engine brake.

FAILURE SIGNALLING

Failures to the Selespeed gearbox are indicated by the (**A-fig. 123**) warning light on the instrument cluster.

When the system is turned on (turning the ignition key to **MAR**), the warning light should turn on glowing steadily for about 4 seconds and then turn off.

If the warning light stays on it means that a fault to the gearbox has been detected; at the same time a buzzer sounds intermittently for 4 seconds to attract the driver's attention.

A0B0447m

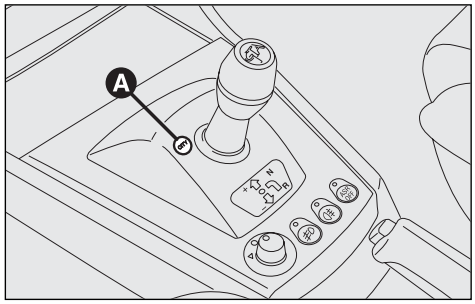

fig. 122

A0B0404m

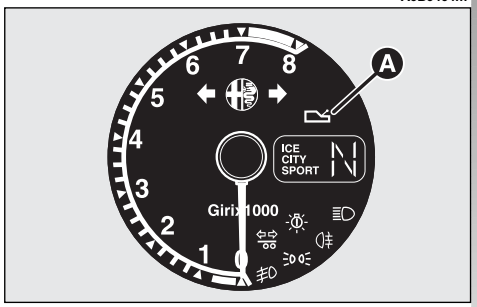

fig. 123

Downloaded from www.Manualslib.com manuals search engine

If the warning light comes on, contact the Alfa Romeo Authorized Services as soon as possible to remove the fault.

In the case of a fault to the gearshift lever, the system automatically activates the automatic **CITY** mode to allow the car to reach the nearest Authorized Alfa Romeo Services to have the fault detected eliminated.

In the event of faults to other components of the gearbox, the system only allows the engagement of certain ratios: first gear (**1**), second (**2**) and reverse (**R**).

WARNING

In case of transmission fault, contact the Alfa Romeo Authorized Services as soon as possible to check the system.

SIGNALLING WITH THE BUZZER

The buzzer is activated when:

— reverse gear (**R**) is engaged;

— the vehicle is parked with the gearbox at neutral (**N**); this can be seen turning the ignition key to **STOP**;

— clutch overheating takes place during pick-up;

— the car moves in the opposite direction to the gear engaged (e.g.: the car tends to do downhill with reverse gear engaged);

— in the event of gearbox failure;

— the system has automatically engaged neutral (**N**) after:

- there is no action on the accelerator and/or brake pedal for at least 3 minutes;
- the brake pedal is pressed for over 10 minutes;
- the driver's door is opened and the accelerator and brake pedal are not pressed for at least 1 second;
- detection of a gearbox fault.

PARKING THE VEHICLE

To park the car safely it is **absolutely necessary** to engage first gear (**1**) or reverse (**R**) and, when on a sloping road, also engage the hand-brake.

Turning the engine off with the car facing uphill and a gear engaged, it is **absolutely necessary** to wait for the display on the rev counter to go off before releasing the brake pedal, so that the clutch has innested completely.

If the gearbox is in neutral (**N**) and you want to engage a parking gear, it is necessary to activate the system and engage the gear (**1**) or reverse (**R**) with your foot on the brake pedal.

Downloaded from www.Manualslib.com manuals search engine

TOWING THE VEHICLE

WARNING For towing the vehicle, adhere to local regulations. Make sure that the gearbox is in neutral (**N**) (checking that the car moves when pushed) and proceed as for towing a normal car with mechanical gearbox following the instructions given in the chapter "In an emergency".

Should it be impossible to set to neutral, do not tow the vehicle; contact Alfa Romeo Authorised Services.

WARNING

Do not start the engine when towing the vehicle.

INTERNAL FITTINGS

GLOVEBOX

On the dashboard there is a key-lockable glovebox with light. The lock can be opened/closed using the ignition key.

WARNING

Do not travel with the glovebox open; it could harm the passenger in the event of an accident.

To open the glovebox use lever (**A-fig. 124**).

The compartment is lit by a courtesy light when it is open (when the ignition key is at **MAR** (**B-fig. 125**).

There is a recess on the lid (**C-fig. 125**) for inserting a pen or pencil.

A0B0262m

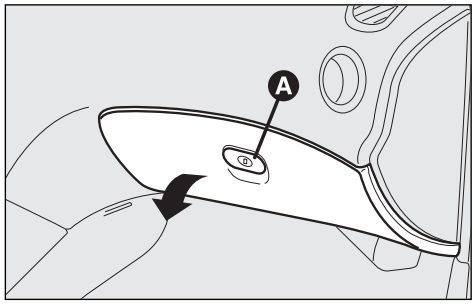

fig. 124

A0B0261m

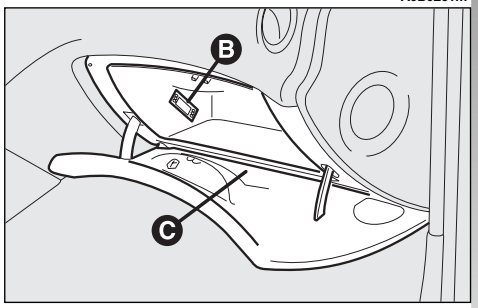

fig. 125

Downloaded from www.Manualslib.com manuals search engine

GRAB HANDLES (fig. 126)

Grab handles are set above the front doors.

Two grab handles (**A**) fitted with a coat hook (**B**) are located above the rear doors.

CEILING LIGHTS

The car is fitted with passenger's compartment ceiling lights (front/rear) with gradual switching on/off. Timings, defined as max. switching on time elapsing between the end of gradual switching on and the start of gradual switching off are as follows:

1) approx. 6 seconds when:

— unlocking the doors manually or by the remote control

— closing the driver's door to get into the car and fit the key into the ignition switch

— removing the key from the ignition switch

2) approx. 3 minutes from the door opening

IMPORTANT With ignition key at **STOP** or when opening a door or the tailgate 15 minutes timing is activated, then ceiling lights go off. Timing restarts each time a door/tailgate is opened.

Front ceiling light (fig. 127)

The roof light comprises two lights with the control switch.

With switch (**A**) in the central position (**1**), both lights turn on when a door is opened.

When the doors are closed, a timer is activated for about 7 seconds, to allow the car to be started. The lights go out when the ignition key is turned to **MAR** (with the doors closed).

Moving switch (**A**) to the left (position **0**), the lights stay off (position **OFF**).

Moving switch (**A**) to the right (position **2**) both lights stay on.

The spot function is operated by switch (**B**).

A0B0124m

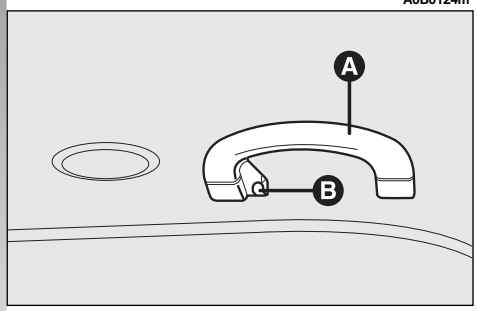

fig. 126

A0B0260m

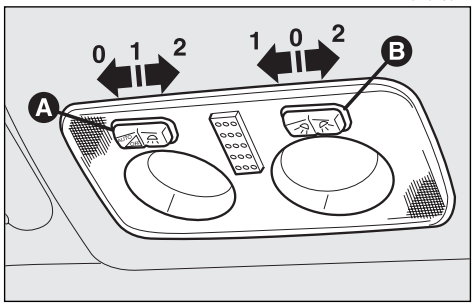

fig. 127

Downloaded from www.Manualslib.com manuals search engine

Moving switch (**B**) to the left (position **1**) the left spot light turns on. Moving switch to the right (position **2**) the right spot light turns on.

With switch (**B**) in the central position (position **0**) the spotlights stay off.

IMPORTANT Before leaving the car, make sure that both switches are in the central position. This way, the roof lights will go out when the doors are closed. If a door is left open, the lights will go out automatically after a few seconds.

To turn them on again, simply open another door or close the same one and open it again.

Courtesy light (fig. 128)

Lowering the passenger's sun visor, the courtesy light on the roof lining can be seen.

This light makes it possible to use the courtesy mirror under conditions with dim light.

On Sportwagon versions there is also a courtesy light under the driver's sun visor.

Use switch (**A**) to turn it on and off, with the ignition key at **MAR**.

Rear roof light (fig. 129) (except versions with sunroof)

In correspondence with each rear door there is a light which turns on automatically when a door is opened.

They are timed and work in the same way as described for the front roof light.

They can be turned on and off by hand pressing the transparent cover (**A**) on the circular impression.

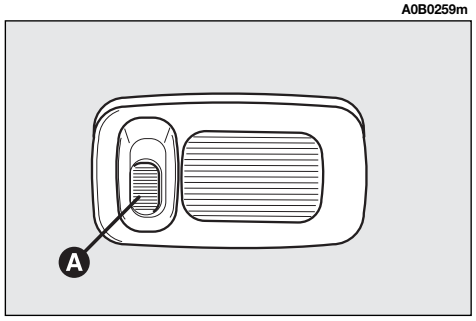

fig. 128

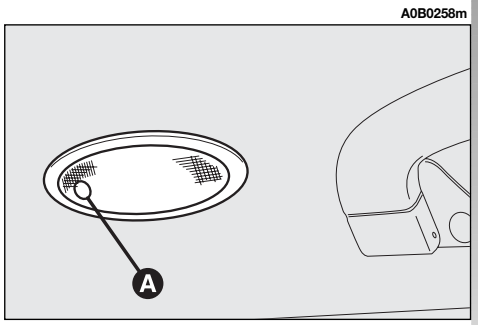

fig. 129

Downloaded from www.Manualslib.com manuals search engine

Centre rear roof lamp (fig. 130) (only versions with sunroof)

On the roof lamp there is a switch with three positions. When the switch (**A**) is in the central position (**0**) the roof lamp turns on automatically when a door is opened.

Lighting up is timed and it works as described for the front roof lamp.

Moving the switch to the right (position **1**) the roof lamp stays off all the time.

Moving the switch to the left (position **2**) the roof lamp stays on all the time.

IMPORTANT Before leaving the car make sure that the switch (**A**) is in the central position (**0**), so that the lamp goes out when the doors are closed.

FRONT ASHTRAY AND CIGAR LIGHTER (fig. 131)

To open the ashtray push and release the front of the ashtray.

To use the cigar lighter press, with the ignition key at **MAR**, button (**B**); after some seconds the knob will return automatically to its initial position and the cigar lighter is ready for use.

Remove the tray (**A**) to empty and clean the ashtray.

WARNING

The cigar lighter gets extremely hot. Handle with care and prevent its use by children: danger of fire and/or burning.

Always ensure that the cigar lighter has turned off.

WARNING

Do not use the ashtray as paper bin: it could set on fire on contact with cigarette stubs.

A0B0257m

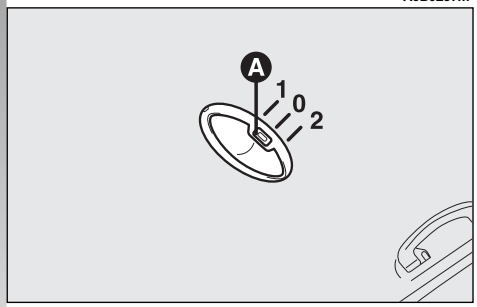

fig. 130

A0B0256m

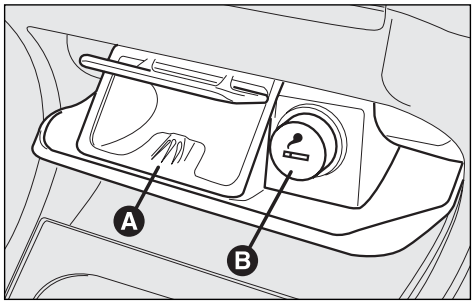

fig. 131

Downloaded from www.Manualslib.com manuals search engine

REAR ASHTRAYS (fig. 132)

An ashtray (**A**) is fitted to each rear door.

To open, pull downwards as shown below.

ODDMENTS RECESSES ON CENTRE CONSOLE (fig. 133)

Centre recess

On the centre console near the handbrake lever, there are the following oddments recesses:

— oddments recesses (**A**) and (**B**);

— coin recess (**C**).

ODDMENTS RECESSES ON DASHBOARD

Left side recess (fig. 134)

An oddments recess (**A**) is provided on the lower side of the dashboard, on the left of the steering column.

A0B0255m

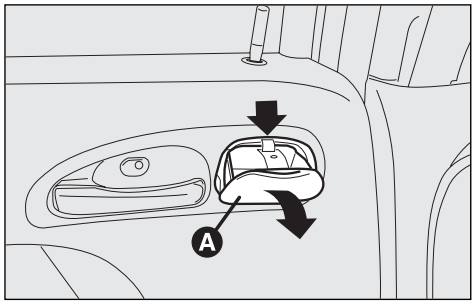

fig. 132

A0B0283m

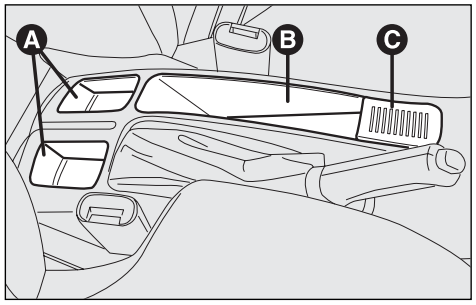

fig. 133

A0B0254m

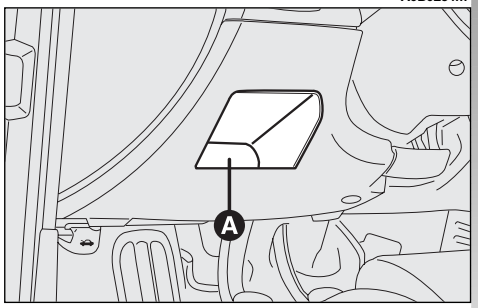

fig. 134

Downloaded from www.Manualslib.com manuals search engine

FRONT DOORS COMPARTMENTS AND POCKETS (fig. 135)

Each front door has an oddments pocket (**A**).

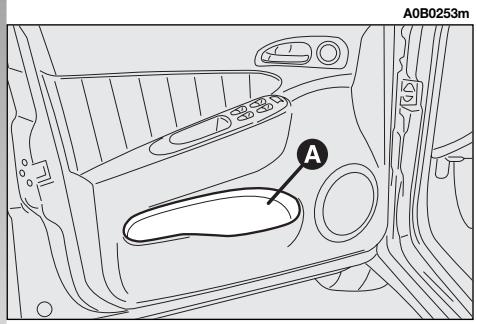

fig. 135

SUN VISORS

They can be adjusted frontally and laterally.

On the back of the visors there is a courtesy mirror with sliding cover (**A-fig. 136**), lit by the lamp (**B**).

The passenger's sun visor bears also the symbol for correct use of children's seats in cars equipped with passenger's airbag. For further information, see the descriptions given in paragraph "Passenger's front airbag" in this chapter.

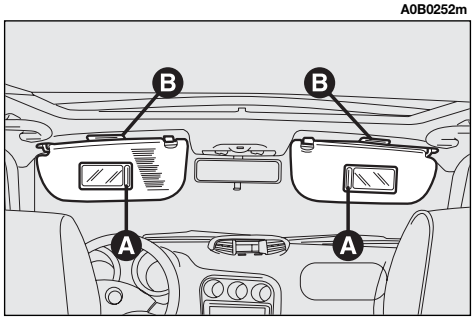

fig. 136

TELEPHONE PROVISION

(on request for versions/ markets where applicable)

On request for versions/markets where applicable, the car may be fitted with a provision for the installation of a cellular telephone.

This provision comprises:

— sound system two-function aerial + cellular phone;

— supply and connection cables with specific connector for voice kit connection.

The voice kit must be purchased separately by the customer, since it has to be compatible with the customer's own cellular phone.

For the installation of the cellular phone and connection to the provision in the car, contact only Alfa Romeo Authorized Services; this will guarantee first-rate results with no possibility of any inconvenience that may compromise the safety of the vehicle.

Downloaded from www.Manualslib.com manuals search engine

ACCESSORIES PURCHASED BY THE OWNER

If, after purchasing your car, you want to install electric accessories that require permanent power supply (burglar alarm, voice function, radionavigator with satellite burglar alarm, etc.) or other accessories that affect the vehicle's electric load, contact Alfa Romeo Authorized Services, whose qualified staff is able to recommend the most suitable equipment of the Lineaccessori Alfa Romeo, and also assess the electric absorption of the same, checking if the vehicle can withstand the required load or if a battery of greater power must be used.

RADIO TRANSMITTERS AND CELLPHONES

Cellphones and other radio transmitters (e.g. CB radios) cannot be used inside the vehicle, unless you use a separate aerial mounted outside the vehicle.

WARNING

The use of cellphones, CB radios or similar inside the passenger compartment (without an outside aerial) produces electromagnetic RF fields; if these are amplified by the resonance inside the passenger compartment, they may not only result in a potential health hazard, or poor functioning of the electronic systems such as engine control units, ABS/EBD control units, etc., fitted to the vehicle, but also put the safety of your vehicle in jeopardy.

The transmission and reception efficiency of this equipment may also be affected by the shielding effect of the vehicle's body.

SUNROOF
(optional for versions/markets where applicable)

The sunroof can only be operated when the ignition key is in the **MAR** position.

WARNING

Improper use of the sunroof can be dangerous. Before and while operating it, always make sure that the passengers are not exposed to the risk of harm caused either directly by the sunroof in motion or by personal items drawn or knocked by it.

Do not open the sunroof when snow or ice are on the roof as this may damage it.

WARNING

When leaving the vehicle, the ignition key should always be removed to avoid accidents involving the sunroof which could be inadvertently operated by any passenger remaining in the vehicle.

Downloaded from www.Manualslib.com manuals search engine

SLIDING FORWARDS/ BACKWARDS (fig. 137-138)

Press control button (**A**) on rear end (**1**) to open the roof; press on front end (**2**) to close it.

When the button is released, the sunroof will stop in that position.

For versions/markets where applicable, during opening the roof stops automatically in an intermediate position called "Comfort", which is advised for average speeds. In this case, complete opening is obtained pressing the rear end (**1**) of button (**A**) again. When closing, the roof does not stop in the "Comfort".

The sunroof is fitted with a curtain below, which prevents sun radiation and is drawn by hand using a catch.

The curtain is drawn by the roof when the roof opens and is pushed completely inside the roof panel when the roof is opened completely. With the closing movement the curtain will come out partially so that the hand catch is accessible (**A-fig. 139**).

WARNING

Open and close the roof only when the vehicle is stationary.

RAISING TO THE QUARTERLIGHT POSITION

This can only be achieved (**fig. 140**) when the sunroof is completely closed, pressing front end (**2**) of the control button (**A-fig. 141**).

Press the rear end (**1**) of the button (**A-fig. 141**) to return the sunroof to the horizontal position (roof closed).

A0B0041m

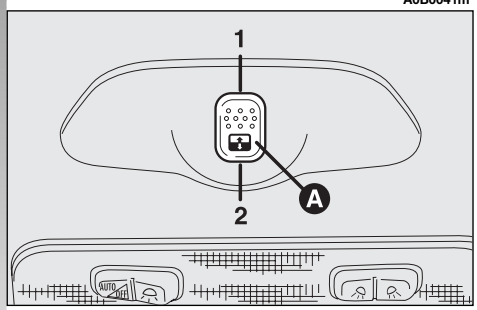

fig. 137

A0B0249m

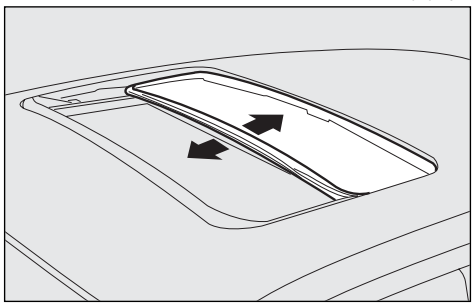

fig. 138

A0B0248m

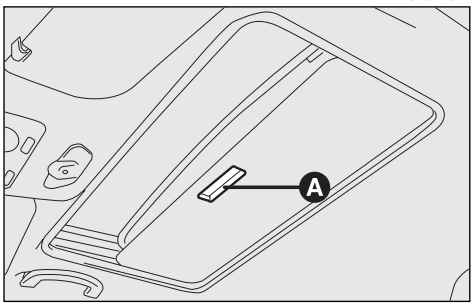

fig. 139

Downloaded from www.Manualslib.com manuals search engine

EMERGENCY OPERATION

If the electrical control device does not work, the sunroof can be opened manually as follows:

— apply leverage to the points indicated by the arrows and remove the plate with switch (**D-fig. 141**);

— using the special key (**B-fig. 142**) provided in the glovebox, press and rotate the sunroof control bushing (**C-fig. 142**) clockwise to open and counterclockwise to close.

IMPORTANT When the operation has been ended, the key should be turned half a turn in the opposite direction, until a click is heard, before it is removed.

LUGGAGE COMPARTMENT

The tailgate can be opened from outside the vehicle (pressing the button on the ignition key) and from inside the vehicle.

IMPORTANT If the boot is not properly shut, the symbol ⊟ on the Infocenter display will come on (together with the indication of the relevant message).

A0B0247m

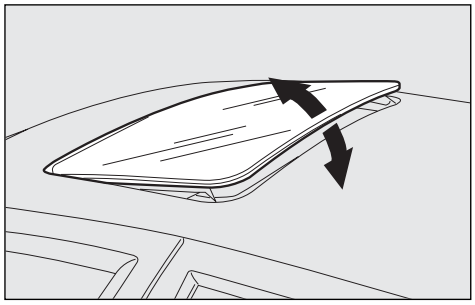

fig. 140

A0B0246m

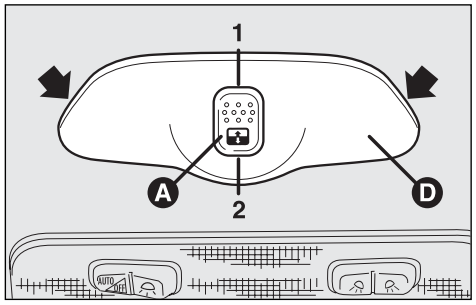

fig. 141

A0B0245m

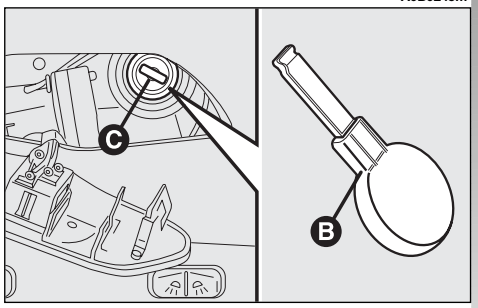

fig. 142

Downloaded from www.Manualslib.com manuals search engine

OPENING FROM INSIDE

To open the boot from inside the passenger compartment, pull the lever (**A-fig. 143**), at the side of the driver's seat.

WARNING

Only use the boot opening lever with the vehicle stationary.

Lifting the boot lid is made easier by the action of gas springs.

The gas springs are calibrated to guarantee correct operation with loading specified by the manufacturer. Arbitrary additions to the boot lid (spoiler, etc.) may affect its operation and safety.

OPENING WITH REMOTE CONTROL (fig. 144)

The luggage compartment can be opened by remote control from outside pressing the button (**C-fig. 144**), also when the electronic alarm is on.

In this case, the alarm system switches off volumetric protection and the boot lid control sensor. The system also sounds two beeps and the direction indicators light up for about three seconds (with the exception of versions for certain markets).

Closing the boot again the control functions are restored, the system sounds two beeps and the direction indicators light up for about three seconds (with the exception of versions for certain markets).

A0B0042m

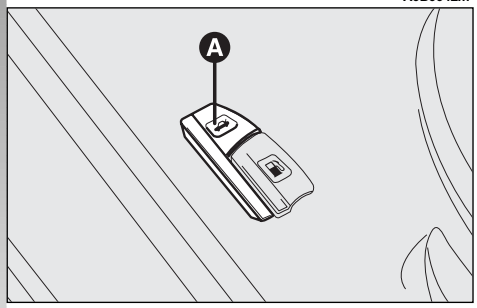

fig. 143

A0B0743m

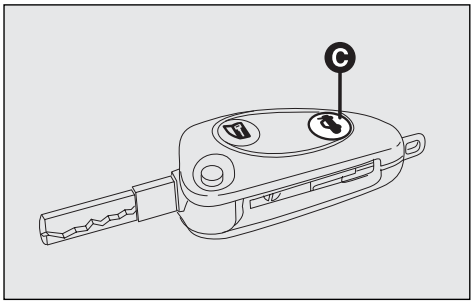

fig. 144

Downloaded from www.Manualslib.com manuals search engine

CLOSING THE BOOT

To close the boot, lower it and press down above the locking mechanism until it is heard to click into place.

BOOT LIGHTING (fig. 145)

Opening the boot, the light (**A**) in the upper part of the boot turns on automatically.

The light goes out closing the boot or after a few minutes (about 15) if the boot is left open. In this case, to turn it on again close the boot, then open it again.

SECURING THE LOAD (fig. 146-147)

The load carried may be blocked with straps hooked to the special rings in the boot corners.

The rings also serve to secure the luggage retaining net (available upon request, for versions/markets where applicable) c/o Alfa Romeo Authorized Services.

A0B0241m

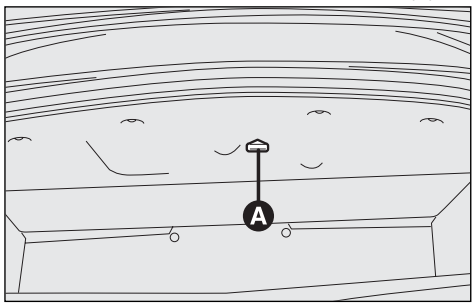

fig. 145

A0B0242m

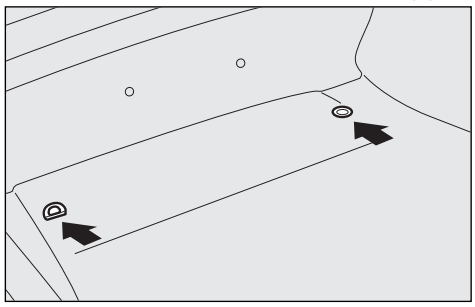

fig. 146

A0B0243m

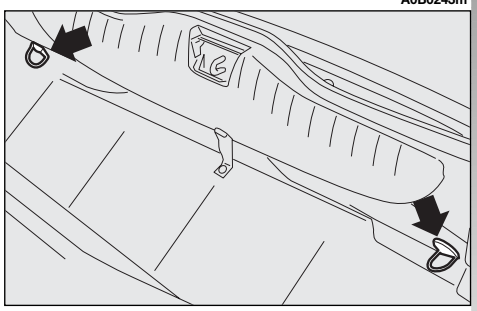

fig. 147

Downloaded from www.Manualslib.com manuals search engine

CAUTIONS FOR CARRYING LUGGAGE

Travelling at night with a load in the boot it is necessary to adjust the height of the low beam headlights (see next paragraph "Headlights" in this chapter). For correct use of the aiming device, also make sure that the load does not exceed the values given in the same paragraph.

WARNING

Do not load the luggage compartment above the permitted maximum (see "Technical specifications"). Also make sure that the objects contained in the boot are well secured to prevent them from being thrown forward causing harm to the passengers in the event of sharp braking.

WARNING

A heavy load that has not been secured may cause serious harm to passengers in the event of an accident.

WARNING

When wanting to carry a spare can of petrol, this must be done in compliance with the law, only using a certified can, appropriately fastened to the load restraint eyelets. Even so, the risk of fire is increased.

BONNET

The lever used to open the bonnet is located under the left end of the dashboard.

To open:

— Pull the lever (**A-fig. 148**) until the bonnet clicks open.

WARNING

Only with the car stationary.

A0B0049m

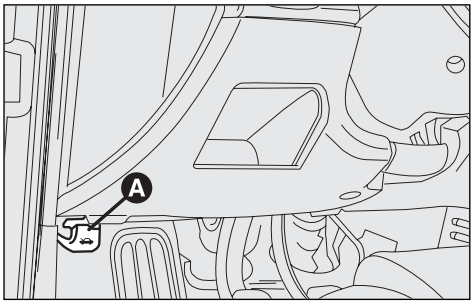

fig. 148

Downloaded from www.Manualslib.com manuals search engine

WARNING

Before lifting the bonnet, make sure that the windscreen wiper arms are not raised from the windscreen.

— Press the safety lever (**B-fig. 149**) upwards.

— Raise the bonnet.

IMPORTANT Bonnet raising is aided by two gas springs. Do not tamper with these springs and accompany the bonnet while raising it.

A0B0048m

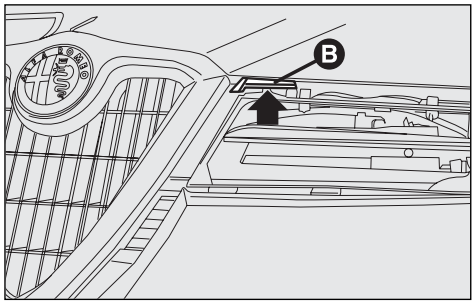

fig. 149

WARNING

DANGER-SERIOUS INJURY. When carrying out checks or maintenance operations in the engine compartment, take special care not to bump the head on the raised bonnet.

WARNING

If checks need to be carried out in the engine compartment when the engine is still warm, keep away from the fan as it could start up even when the key is removed from the ignition. Wait until the engine cools down.

WARNING

Scarves, ties and loose clothing may be caught in the moving parts causing serious damages.

To close:

— lower the bonnet to approx. 20 cm from the engine compartment, then let it drop. Try lifting it to make sure that it is shut completely and not simply caught in the safety position.

If the bonnet does not close properly, do not push it down but open it again and repeat the above procedure.

WARNING

For safety reasons the bonnet shall always be perfectly closed when travelling. Always check for proper bonnet locking. If the bonnet is left inadvertently open, stop the car immediately and close the bonnet.

Downloaded from www.Manualslib.com manuals search engine

HEADLIGHTS

LIGHT BEAM AIMING

IMPORTANT The adjustment of the headlights is vital to your safety and comfort and to that of other road users. The adjustment of the headlights is also governed by precise regulations. To guarantee both to yourself and to the other drivers the best visibility conditions when travelling with the headlights on, the vehicle must have its headlights properly adjusted. Contact Alfa Romeo Authorized Services to have the headlights correctly adjusted.

COMPENSATION FOR TILT (fig. 150)

If the car is fitted with xenon headlights, beam aiming is electric and therefore control (**A**) located on the plate at the side of the steering column is not present.

When the vehicle is loaded, the beam from the headlights is raised due to the backwards tilt of the vehicle.

In this case the headlights must be adjusted using control (**A**) located on the plate at the side of the steering column.

This control has four positions corresponding to various vehicle loads given below:

— position **0**: 1 or 2 people occupying front seats, full fuel tank, on-board equipment present;

— position **1**: 5 people on-board;

— position **2**: 5 people on-board, luggage compartment full (50 kg approximately);

— position **3**: driver and 300 kg in luggage compartment.

WARNING

Check the positioning of the headlight beams every time you change the load to be carried.

A0B0240m

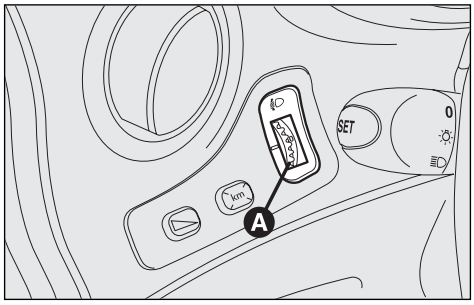

fig. 150

ADJUSTING THE FRONT FOGLIGHTS

To adjust the height of the beam of the front foglights, act on adjusting screw (**A-fig. 151**).

Contact Alfa Romeo Authorized Services to have the headlights correctly adjusted.

A0B0239m

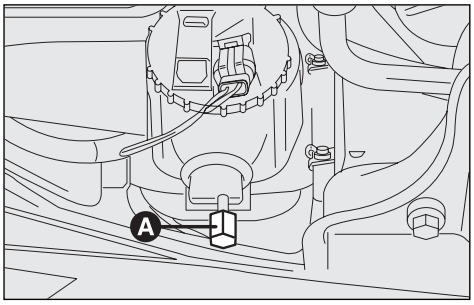

fig. 151

Downloaded from www.Manualslib.com manuals search engine

GAS DISCHARGE HEADLIGHTS
(optional for versions/markets where applicable)

The gas (xenon) discharge headlights operate with a voltaic arc, in an ambient saturated with pressure xenon, instead of the glow filament.

The resulting illumination is sensibly higher to that of conventional lamps, both for light quality (clearer light) and for the width and positioning of the illuminated area.

The advantages of better illumination can be perceived (due to less eyesight fatigue and greater orientation capacity for the driver, which in turn means higher driving safety) especially in case of bad weather, fog and/or insufficient road signs, thanks to the better illumination of the side parts of the visual field, normally obscured.

The large increase of the side part illumination increases driving safety since it allows the driver to better see the other users on the edge of the road (pedestrians, cyclists and bikers).

The triggering of the voltaic arc requires a very high voltage, while subsequent power supply can take place at a low voltage.

The headlights achieve their top luminosity approx. 15 seconds after they are switched on.

The intense light produced by this type of headlights requires the use of an automatic system to keep headlight trim constant and avoid dazzling the vehicles coming from the opposite direction in case of braking, acceleration or when carrying loads.

The electromechanical system to automatically keep constant trim makes the headlight tilt compensating device unnecessary.

Xenon lights have a very long life, therefore breakdowns are unlikely.

WARNING

If necessary, have the system checked and repaired only by Alfa Romeo Authorized Services.

DIPPED BEAM HEADLIGHT AIMING FOR LEFT-HAND/ RIGHT-HAND DRIVING
(only for versions with gas discharge headlights)

As regards cars equipped with gas discharge headlights (xenon lamps) (optional for versions/markets where applicable) with very great lighting power, when passing from a country with right-hand driving to one with left-hand driving, or vice versa, it is necessary to modify the orientation of the dipped beam headlights, to optimize the illumination of the road edge and avoid dazzling the vehicles coming from the opposite direction.

To have this operation carried out, contact Alfa Romeo Authorized Services.

WARNING

When you go back to your country of origin, remember to have the dipped beam headlight orientation modified again.

Downloaded from www.Manualslib.com manuals search engine

ABS

The car is fitted with an ABS system which prevents wheel lock when braking, better exploits wheel grip and keeps the vehicle controllable within the limits of the available grip also during emergency braking.

The driver can feel that the ABS is operational by a light pulsing of the brake pedal, accompanied by noise.

This should not interpreted as malfunctioning of the brakes, but it is the signal to the driver that the ABS system is working: it is the warning that the car is travelling at the limit of grip an that, therefore, it is necessary to adapt the speed to the type of road on which you are travelling.

The ABS system is an additional part of the basic braking system; in the event of a fault it is disabled, leaving the braking system in the same conditions as a car without ABS.

In the event of a failure, though being unable to rely on the antilock effect, there is absolutely no adverse effect on vehicle braking performance in terms of braking capacity.

If you have never used a car with ABS before, you are advised to learn how to use it with a few preliminary trials on a slippery surface, naturally under safety conditions and fully adhering to the Highway Code of the country concerned. You are also advised to carefully read the following information.

The advantage of the ABS compared with the conventional system is that it makes it possible to maintain maximum vehicle handling performance also in the case of hard braking under grip limit conditions, avoiding wheel lock.

Do not however expect the braking distance always to be reduced with the ABS system: for example, on soft surfaces such as gravel or fresh snow on slippery surfaces, the distance might increase.

In order to be able to exploit as far as possible the possibility of the antilock system in the case of need, it is wise to follow a few pieces of advice:

WARNING

The ABS exploits the available grip in full, but it cannot increase it; therefore, caution is required on slippery surfaces, without running unnecessary

WARNING

If the ABS cuts in, it means that the grip limit between the tyres and the road surface has been reached: it is necessary to slow down and adapt driving to the grip available.

Downloaded from www.Manualslib.com manuals search engine

WARNING

In the event of a system fault, with lighting up of the (ABS) warning light on the instrument cluster (together with the message + symbol shown by the display), have the vehicle checked immediately by Alfa Romeo Authorized Services, driving slowly to be able to regain full system performance.

Braking on corners always requires the utmost caution, even with the help of the ABS.

The most important piece of advice, however, is the following:

WARNING

When the ABS cuts in and you feel the pedal pulse, do not reduce the pressure, but keep the brake pedal firmly pressed with no fear; this way you will stop in the shortest possible space, compatibly with the conditions of the road surface.

Following these instructions you will be in a condition to obtain peak braking performance at all times.

IMPORTANT Cars fitted with ABS must only be fitted with wheel rims, tyres and brake linings of the type and brand approved by the Manufacturer.

The braking system is completed by the electronic control braking distribution system called **EBD** (Electronic Braking Force Distributor) which distributes the braking action through the **ABS** system control unit and sensors.

WARNING

The car is fitted with an electronic brake distributor (EBD). If the (ABS) and (!) warning lights come on at the same time (together with the message + symbol shown by the display) when the engine is running, there is an EBD system fault; in this case, violent braking may lock the rear wheels too early, with the possibility of skidding. Drive extremely carefully to the nearest Alfa Romeo Authorized Services to have the system checked over.

WARNING

If the (!) low brake fluid warning light comes on (together with the message + symbol shown by the display), stop the car immediately and contact the nearest Alfa Romeo Authorized Services. Indeed, any leak of fluid from the hydraulic system compromises the effectiveness of both the conventional brake system and the system with antilock system.

Downloaded from www.Manualslib.com manuals search engine

ATTENZIONE

The turning on of the (ABS) warning light (together with the message + symbol shown by the display) with the engine running normally indicates an ABS system fault. In this case the braking system preserves its effectiveness, without however making use of the antilock device. Under these circumstances, the EBD system may fail to give top performance. In this case, too, you are recommended to contact Alfa Romeo Authorized Services immediately, driving in such a way as to avoid abrupt braking, to have the system checked.

ASR SYSTEM

(Antislip Regulation)

The ASR function controls the vehicle drive and cuts in automatically every time one or both driving wheels slip.

In slipping conditions, two different control systems are activated:

1) if slipping involves both driving wheels, being caused by excessive power transmitted, the ASR device cuts in reducing the power transmitted by the engine.

2) if slipping involves only one driving wheel, the ASR system cuts in automatically braking the wheel that is slipping, with an effect similar to that of a self-locking differential.

The action of the ASR is particularly helpful in the following circumstances:

— slipping of the inner wheel on a bend, due to the effect of dynamic load changes or excessive acceleration.

— too much power transmitted to the wheels also in relation to the conditions of the road surface.

— acceleration on slippery, snowy or frozen surfaces.

— in the case of loss of grip on a wet surface (aquaplaning).

WARNING

The performance of the system in terms of active safety should not induce the driver to take pointless and unnecessary risks. The style of driving must in any case be adapted to the conditions of the road surface, visibility and traffic. Road safety is always the driver's responsibility.

Downloaded from www.Manualslib.com manuals search engine

SWITCHING ON THE ASR FUNCTION

The ASR function switches on automatically each time the engine is started.

When travelling the device can be switched off and on again pressing switch (**A-fig. 152**) on the centre console.

When the device is switched off this is shown by the lighting up of the led on the button, by the warning light on the instrument panel turn on and by the message ASR OFF on Infocenter display. If the function is switched off when travelling, it will turn on again automatically the next time the engine is started.

A0B0286m

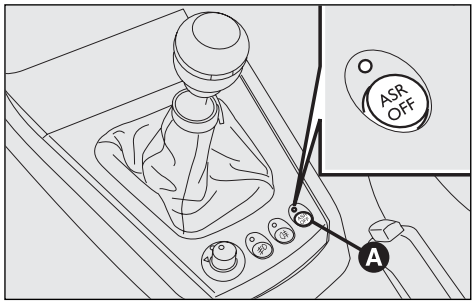

fig. 152

For correct operation of the ASR system the tyres must absolutely be of the same brand and type on all wheels, in perfect conditions and above all, of the specified type, brand and size.

IMPORTANT When travelling on snow with snow chains, it may be helpful to turn the ASR device off: in fact, in these conditions, slipping of the driving wheels when moving off makes it possible to obtain better drive.

ASR system failure warning

In the event of a fault, the ASR system switches off automatically and the warning light on the instrument cluster turns on with fixed light, together with the message "ASR OFF" on the Infocenter display and button led (**A-fig. 152**).

In the event of an ASR system operating failure, the car behaves in the same way as a car that is not fitted with this system: in any case, it is advisable to contact Alfa Romeo Authorised Services as soon as possible.

MSR system (Engine drive adjustment)

The car is fitted with a special system, integral with the ASR system, that in case of sudden gear shifting, cuts in providing torque to the engine thus preventing excessive driving wheel drive that, specially in poor grip conditions could lead to loss of stability.

ABD system

This system, integral with the ASR system, enables to modulate in a combined mode the pressure inside the brake circuit acting on driving wheels and the engine torque. The action of the ABD system is particularly helpful when driving uphill with driving wheels under different grip conditions, i.e.: poor grip on one side and good grip on the other side.

Downloaded from www.Manualslib.com manuals search engine

EOBD SYSTEM

The EOBD (European On Board Diagnosis) system fitted in the car conforms with the EC 98/69 (EURO 3) Directive.

This system continuously monitors the components of the vehicle related to emissions; it also indicates, when the warning light comes on on the instrument panel (together with the message + symbol shown by the display) that the components in question are in poor conditions.

The objective is the following:

— to keep under control the efficiency of the system;

— to indicate when a malfunction causes an increase in the emissions beyond the threshold established by European regulations;

— to indicate the need to replace the deteriorated components.

The system also has a diagnostic connector, which can be interfaced with adequate instruments, that enables the error codes stored in the control unit to be read, together with a series of specific parameters concerning the operation and diagnosis of the engine. This check can also be made by the traffic control agents.

If, when the ignition key is turned to MAR, the warning light does not come on or if, when driving, it lights up and emits a fixed light or a flashing one (together with the message + symbol shown by the display), contact an Alfa Romeo Authorized Service Station as soon as possible. The operation of the warning light can also be checked by means of special equipment available to the traffic control officers. Comply with the regulations in force in country where you drive your car.

IMPORTANT After the problem has beel resolved, to completely check the system, the Alfa Romeo Authorized Service Station must carry out tests on a test bench and, if necessary, road tests that could be long.

Downloaded from www.Manualslib.com manuals search engine

SOUND SYSTEM

The fixed sound system with CD player with parametric sound equalizer has been designed to suit the specific characteristics of the passenger compartment, with a personalised design that matches the style of the dashboard. The sound system instructions for use are described in the attached supplement.

SOUND SYSTEM PRESETTING SYSTEM

(for versions/markets where applicable)

The car, if not delivered with sound system, is fitted with a glove compartment (**fig. 153**) on the instrument panel.

Sound system presetting system includes the following:

— sound system power cables;

— front and rear speaker power cables;

— aerial power cable;

— sound system housing;

— aerial on car roof (where provided).

The sound system shall be installed in the proper housing occupied by the glove compartment that can be removed by pressing the two retaining tabs in the glove compartment: here are the power cables.

If after buying the car you want to install the sound system, contact first Alfa Romeo Authorised Services whose qualified personnel, in addition to suggesting the most suitable devices, will evaluate the overall electric absorption to safeguard the battery. Excessive loadless absorption could damage the battery and lose warranty.

The wiring diagram is the following (**fig. 154**):

A0B742m

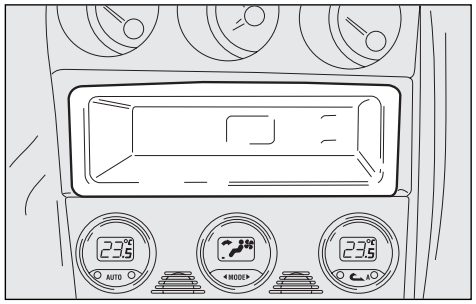

fig. 153

A0B741m

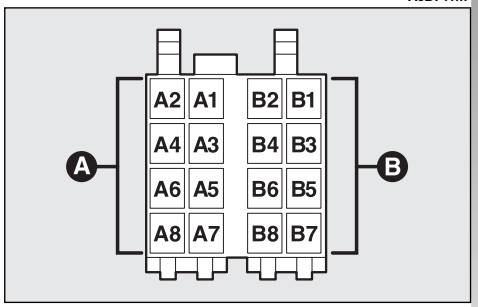

fig. 154

Downloaded from www.Manualslib.com manuals search engine

Connector A

A1 N.C.

A2 N.C.

A3 N.C.

A4 + 30 (battery-powered)

A5 Aerial power supply

A6 Light

A7 + 15 (key-powered)

A8 Ground

Connector B

B1 RH rear speaker

B2 RH rear speaker

B3 RH front speaker

B4 RH front speaker

B5 LH front speaker

B6 LH front speaker

B7 LH rear speaker

B8 LH rear speaker

REFUELLING

The anti-pollution devices present on the vehicle impose the use of four-star unleaded fuel with an octane number (R.O.N.) above 95.

Under no circumstances should conventional leaded petrol be used, as this would irreparably damage the catalyst. If the tank is accidentally filled with leaded fuel, even in minute quantities, DO NOT START THE ENGINE. Do not attempt to dilute the petrol with lead free fuel. Drain the entire fuel circuit and tank.

In order to prevent the vehicle being filled with leaded petrol, the diameter of the filler neck is smaller than the nozzle used on pumps delivering leaded petrol.

If the catalyst is not working properly, harmful emissions reach the exhaust, resulting in environment pollution.

Downloaded from www.Manualslib.com manuals search engine

FUEL CAP

The fuel flap is released from inside the car, raising the front part of the lever (**A-fig. 155**).

The fuel cap (**A-fig. 156**) has a catch to prevent misplacing it (**B**) that fastens it to the flap (**C**).

IMPORTANT The fuel tank is sealed hermetically and pressure may build up inside. Any noise of rushing air when the cap is removed is perfectly normal.

IMPORTANT For your safety, make sure that the fuelling pump nozzle is inserted correctly into the housing, before starting the engine.

WARNING

Do not get near the fuel filler with naked flames or lit cigarettes: danger of fire.

Also avoid going too near the filler with the face to avoid inhaling harmful vapours.

In case of need, replace the fuel cap only with an original one; otherwise, the efficiency of the petrol vapour recovery system could be badly affected.

A0B0044m

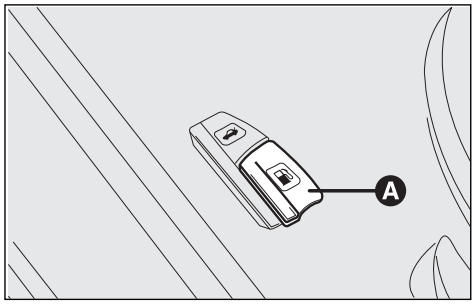

fig. 155

A0B0045m

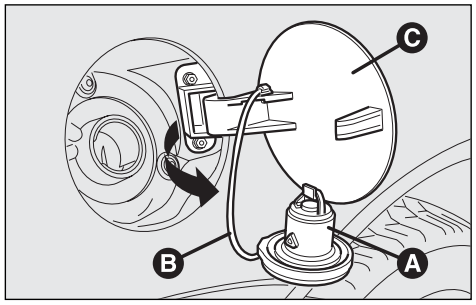

fig. 156

Downloaded from www.Manualslib.com manuals search engine

EMERGENCY FLAP OPENING DEVICE

If the lever (**A-fig. 155**) fails to work, it is still possible to open the flap by pulling the cord (**A-fig. 157**) on the right-hand side of the luggage compartment.

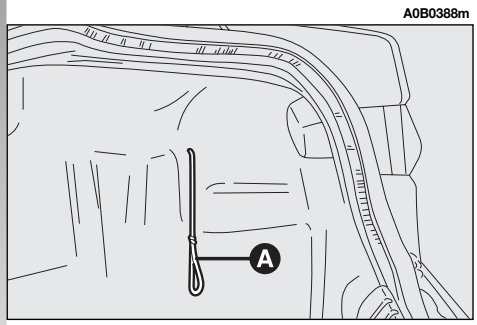

fig. 157

ENVIRONMENTAL PROTECTION

The design and construction of the vehicle have not only been developed with the traditional aspects of performance and safety in mind, but also take into account the increasingly pressing problems tied to protecting the environment.

The choice of materials, techniques and particular devices are the result of work which has made it possible to drastically reduce the harmful effects on the environment and guarantee respect for the severest international norms.

USE OF NON-TOXIC MATERIALS

None of the components of the vehicle contains asbestos. The padding and the climate control system do not contain CFCs which are held to be responsible for the depletion of the ozone layer.

The colouring agents and the corrosion inhibitors used on the nuts, screws and bolts do not contain cadmium any more, which could pollute the atmosphere and water tables.

Downloaded from www.Manualslib.com manuals search engine

EMISSION REDUCING DEVICES

Trivalent catalytic converter (catalytic silencer)

The exhaust system is fitted with a catalyzer formed of alloys of noble metals. It is housed in a stainless steel container which is able to resist the high operating temperatures.

The catalyzer converts the unburnt hydrocarbons, carbon monoxide and nitrogen oxides present in the exhaust gas (even if in small quantities thanks to the electronic injection and ignition system) into harmless compounds.

WARNING

Due to the high temperatures reached during operation of the catalytic converter, the vehicle should not be parked over inflammable materials (paper, fuel oils, grass, dry leaves, etc.).

Lambda probes

The sensors (lambda probe) measures the content of oxygen present in the exhaust gas. The signal transmitted by the lambda probe is use by the injection and ignition electronic control unit to adjust the air-fuel mixture.

Anti-evaporation system

As it is impossible, even when the engine is switched off, to prevent the formation of fuel vapours, a system has been devised which "imprisons" the vapours in a special activated carbon container.

During operation of the engine, these vapours are sucked up and sent to combustion.

Downloaded from www.Manualslib.com manuals search engine

CORRECT USE OF THE CAR

STARTING THE ENGINE

IMPORTANT The car is fitted with an electronic engine lock device. If the engine fails to start see "Alfa Romeo CODE system".

In addition to the notes and specifications given below we recommend that, during the initial period, you do not drive to full vehicle performance (for example excessive acceleration, long journeys at top speed, hard braking, etc.).

WARNING

Running the engine in confined areas is extremely dangerous. The engine consumes oxygen and produces carbon monoxide which is a highly toxic and lethal gas.

The ignition switch is fitted with a safety device which obliges the driver to return the ignition key to the **STOP** position before repeating the starting operation if the engine does not start immediately.

Similarly, when the engine is running, the device prevents the key being moved from the **MAR** to the **AVV** position.

To avoid useless consumption of power and possible draining the battery, never leave the ignition key in the MAR position when the engine is not running.

STARTING OPERATION

IMPORTANT It is important not to press the accelerator until the engine has started.

1) Make sure the handbrake is engaged.

2) Move the gear lever to neutral.

3) Fully depress the clutch pedal so that the starter motor is not forced to crank the toothed wheels of the gearbox.

4) Ensure that the systems and electrical devices, especially if they absorb high quantities of energy (e.g. heated rear windscreen) are switched off.

5) Turn the ignition to the **AVV** position and release it as soon as the engine starts.

6) If the engine does not start, return the key to the **STOP** position and repeat the operation.

Downloaded from www.Manualslib.com manuals search engine

IMPORTANT If it is difficult to start the engine do not insist with extended attempts which may damage the catalyzer but contact Alfa Romeo Authorized Services.

IMPORTANT On versions equipped with Selespeed gearbox, keep the brake pedal pressed when starting the engine. As the brake pedal stiffens if it is pressed repeatedly with the engine off, in this situation, to allow the engine to be started, it is necessary to increase the pressure exerted on the pedal itself.

WARMING THE ENGINE

— Drive off slowly, at medium revs without accelerating abruptly.

— Do not drive at full performance for the initial kilometers of the journey, Wait until the engine coolant temperature is between 50 and 60 °C.

SWITCHING OFF

— Release the accelerator pedal and wait until the engine reaches idle speed.

— Turn the ignition key to the **STOP** position and switch off the engine.

IMPORTANT After a taxing drive it is better to allow the engine to "catch its breath" before turning it off by letting it idle to allow the temperature in the engine compartment to fall.

For vehicles equipped with turbocharger in particular and for other vehicles in general, revving the engine before switching off should be avoided. Revving the engine serves no purpose and consumes fuel for no reason. It may also cause damage to the bearings on the rotor of the turbocharger.

IMPORTANT If the engine turns off with the car on the move, the next time it is started, the Alfa Romeo CODE warning light (CODE) may turn on. In this case, check that switching off and starting the engine again with the car stationary, the warning light stays off. If not, contact Alfa Romeo Authorized Services.

Downloaded from www.Manualslib.com manuals search engine

EMERGENCY STARTING

If the Alfa Romeo CODE system does not recognise the code transmitted by the ignition key (Alfa Romeo CODE (CODE) warning light on the instrument cluster on glowing steadily) emergency starting may be carried out using the code of the CODE card.

For the correct procedure see the chapter "In an emergency".

Starting by pushing, towing or running downhill must absolutely be avoided. These manoeuvres may cause fuel to flow into the catalyst and damage it irreparably.

WARNING

Remember that the servo-brake and power steering are not activated until the engine is started, therefore considerably greater effort is required on the brake pedal and steering wheel.

PARKING

When the vehicle is parked, proceed as follows:

— Switch off the engine.

— Engage the handbrake.

— Engage first gear if the car is facing uphill or reverse if the car is facing downhill.

— Turn the front wheels so that the car will immediately come to a half if the handbrake slips.

To avoid useless consumption of power and possible draining the battery, never leave the ignition key in the MAR position when the engine is not running.

WARNING

Never leave children unattended in the car. Always remove the key from the ignition when leaving the car and take it with you.

SAFE DRIVING

In designing your **Alfa 156 GTA**, Alfa Romeo has worked thoroughly to achieve a vehicle able to offer top levels of safety to its passengers. However, the behaviour of the driver is still a decisive factor for road safety.

Below you will find a few simple rules for travelling safely under different conditions. You are certainly familiar with many of them but it is still helpful to read them all carefully.

BEFORE DRIVING OFF

— Make sure the lights and headlights are working properly.

— Adjust the seat, steering wheel and rear-view mirrors, in order to obtain a correct position for driving.

— Adjust the seat back upright and keep your head as close as possible to the head restraint.

— Check that nothing (mats, etc.) can get under the foot pedals.

Downloaded from www.Manualslib.com manuals search engine

— Make sure that any child restraint system (seats, cradles, etc.) are correctly fastened on the rear seat.

— Place any objects in the boot with care to prevent abrupt braking from throwing them forwards.

— Avoid heavy meals before a journey. A light meal will help to keep reflexes ready. Above all avoid alcohol.

Routinely remember to check:

— tyre pressure and conditions;

— engine oil level;

— engine coolant level and system conditions;

— brake fluid level;

— power steering oil level;

— windscreen washer fluid level.

WHEN TRAVELLING

— The first rule for safe driving is care.

— Care also means being able to predict the actions of other road users.

— Strictly respect the traffic regulations in all countries, especially the speed limits.

— Ensure that both yourself and your passengers are wearing their seat belts, that children are carried with the appropriate seats and that any animals are in appropriate compartments.

— Long distances should be trackled in good health.

WARNING

Always fasten the front and rear seat belts including those of any child's seat. Travelling without seat belts increases the risks of serious injury or even death in the event of an accident.

WARNING

Take care when fitting additional spoilers, alloy wheels and wheel caps: they might reduce ventilation of the brakes, thus their efficiency, during abrupt and repeated braking, or long downhill slopes.

WARNING

Driving under the influence of drugs and/or some medicines is highly dangerous for oneself and for others.

WARNING

Never drive with objects on the floor in front of the driver's seat: they might get stuck under the pedals making it impossible to accelerate or brake.

Downloaded from www.Manualslib.com manuals search engine

WARNING

Make sure any mats are appropriate in size: even a slight inconvenience to the braking system may require a higher pedal stroke than normal.

WARNING

Water, ice and salt on the roads may deposit on the brake discs, reducing the effectiveness of the brakes the first time they are used.

— Do not drive for long periods without a break. During breaks get out of the vehicle and move around a bit to shake off the drowsiness.

— Make sure the air in the passenger compartment is changed constantly.

— Never coast the vehicle downhill with the engine switched off as this eliminates the engine braking and power steering effect thus requiring a greater effort on the pedal and steering wheel.

NIGHT DRIVING

Here are some suggestions for night driving.

— Drive with particular care: night driving involves a greater degree of concentration.

— Reduce speed, especially on unlit roads.

— At the first signs of drowsiness stop the car: continuing the journey is dangerous for yourself and others. Continue driving only after sufficient rest.

— Maintain a greater distance from the vehicle in front than in the day: it is more difficult to judge the speed of the vehicle when only the lights can be seen.

— Ensure that the headlights are correctly aligned: if they are too low, visibility is reduced and eyesight is tired. If they are too high they may cause disturbance to other road users.

— Use the main beams only outside built-up areas and only when you are certain that other drivers are not disturbed by their use.

— When meeting vehicles coming in the opposite direction, switch off the main beams and drive with the dipped-beam headlights on.

— Keep headlights and lights clean.

— Outside built-up areas take care of animal crossings.

DRIVING IN THE RAIN

Rain and wet roads can be dangerous.

If the road is wet, the traction between wheel and asphalt is greatly reduced, thus increasing the stopping distance and decreasing road holding.

Here are few suggestions in the case of rain:

— Reduce speed and keep further back from the vehicle in front.

— If it is raining particularly heavily, visibility is also reduced. In these cases, switch on the dipped headlights even if it is still daylight so you can be seen more easily.

— Do not drive through puddles at speed and hold on tightly to the wheel if you do: a puddle taken at high speed might cause you to lose control of the car ("aquaplaning").

Downloaded from www.Manualslib.com manuals search engine

— Position the ventilation controls for demisting (see chapter "Getting to know your car"), to prevent visibility from worsening.

— Routinely check the conditions of the windscreen wiper blades.

DRIVING IN THE FOG

— If fog is very thick, avoid travelling where possible. If travelling with mist, ground fog or the possibility of fog banks:

— Drive at moderate speed.

— Also in the day turn on the dipped-beam headlights, rear fog guards and front fog lights. Do not use the main beam headlights.

IMPORTANT On stretches of road with good visibility, switch off your rear foglights; the brightness of these lights could annoy the people travelling in the cars behind.

— Remember that fog also involves wet asphalt, thus greater difficulty in all types of manoeuvres and longer stopping distances.

— Keep well away from the vehicle in front.

— Where possible avoid sudden changes in speed.

— Possibly avoid overtaking other vehicles.

— If the vehicle is forced to stop (faults, impossibility to continue due to poor visibility, etc.), firstly try to pull off the road. Then turn on the hazard warning lights and, if possible the dipped beam headlights. Rythmically sound the horn if you note another car coming.

MOUNTAIN DRIVING

— When driving downhill, use the engine braking by engaging a low gear, to prevent the brakes from overheating.

— Never coast downhill with the engine off or in neutral and especially not with the ignition key removed.

— Drive at moderate speed and avoid "cutting" corners.

— Remember that overtaking up hill is slower and therefore requires a greater length of clear road. If you are being overtaken on a hill, move over to enable the other vehicle to pass in safety.

DRIVING ON SNOW AND ICE

Here are few suggestions for driving in these conditions:

— Keep your speed down.

— On a snowy road, fit winter tyres or snow chains; see the related paragraphs in this section.

— Use exhaust brake where possible and avoid abrupt braking.

— Avoid abrupt acceleration and changes of direction.

— During cold weather even apparently dry roads may be covered with occasional patches of ice. Pay great attention therefore when driving on roads which are in the shade, or where rocks or trees line the road and on which ice may persist.

— Keep further back from the vehicle in front.

Downloaded from www.Manualslib.com manuals search engine

DRIVING WITH ABS

The ABS is a part of the braking system which essentially offers two advantages:

1) It prevents wheel lock-up and consequent skidding in emergency stops, particularly when the road does not offer much grip;

2) It makes it possible to brake and steer at the same time so you can avoid unexpected obstacles and direct the car where you want while braking. The extent to which this can be done will depend on the physical limits of the tyre's sideways grip.

To make the most of the ABS:

— In emergency braking or when grip is low, a slight pulsing can be felt on the brake pedal: this means that the ABS has come into action. Do not release the pedal, but continue pressing it to give continuity to the braking action.

— The ABS prevents the wheels from locking but it does not increase the physical limits of grip between the asphalt and the road. Therefore, also with a car fitted with ABS, keep within a safety distance from the vehicle in front and limit speed when approaching bends.

The ABS serves to increase car controllabilty not to go faster.

REDUCING RUNNING COSTS AND ENVIRONMENT POLLUTION

Some suggestions which may help you to keep the running costs of your vehicle down and lower the amount of toxic emissions released into the atmosphere are given below.

GENERAL CONSIDERATIONS

Vehicle maintenance

The overall state of the vehicle is an important factor which has a marked influence over fuel consumption and driving comfort and on the life span of your vehicle. For this reason care should be taken to maintain your vehicle by carrying out the necessary checks and regulations in accordance with specifications given in the "Scheduled Maintenance Programme" (see sections... spark plugs, air cleaner, timing).

Tyres

Tyres should be checked at least every four 4 weeks: if the pressure is too low, fuel consumption increases as the resistance to the rolling movement of the tyre is higher. In this state, tyre wear is increased and vehicle handling suffers which will affect safety.

Unnecessary loads

Do not travel with too much luggage stowed in the boot. The weight of the vehicle (especially when driving in town) and its trim greatly affects consumption and stability.

Downloaded from www.Manualslib.com manuals search engine

Electrical devices

Use the electric devices for the necessary time only. The heated rear window, supplementary lights, windscreen wipers, heating system blower require large amounts of energy and, increasing the request for power also increases fuel consumption (up to +25% when driving in built-up areas).

Air conditioner

The air conditioner is an additional load which greatly affects the engine leading to higher consumption (on average up to +20%). When the temperature outside the vehicle permits it, use the air vents where possible.

Spoilers

The use of aerodynamic optional extras which are not certified for the specific use on the vehicle, may reduce the aerodynamic penetration of the vehicle and increase consumption.

STYLE OF DRIVING

Starting

Do not warm the engine when the vehicle is stationary or at high or low revs: in this way the engine will warm up gradually increasing consumption and emissions. You should drive off slowly straight away avoiding high revs so that the engine will warm up more quickly.

Unnecessary actions

Avoid revving the engine when stopped at traffic lights or before switching off the engine and avoid doubling the clutch as these actions have no purpose on modern vehicles and serve only to increase consumption and pollution.

Gear selection

As soon as the traffic and road conditions allow it, shift to a higher gear. Using a lower gear to liven up acceleration greatly increases consumption. In the same way, improper use of the higher gears will increase consumption, emissions and wear and tear on the engine.

Maximum speed

Fuel consumption increases considerably as speed increases. For example, when accelerating from 90 to 120 kph, fuel consumption increases by about +30%. Your speed should be kept as even as possible and superfluous braking and acceleration avoided as this increases both consumption and emissions. A "soft" way of driving should be adopted by attempting to anticipate manoeuvres to avoid imminent danger and to keep a safe distance from the vehicle in front in order to avoid braking sharply.

Acceleration

Accelerating violently increasing the revs will greatly affect consumption and emissions: acceleration should be gradual and should not exceed the maximum torque.

Downloaded from www.Manualslib.com manuals search engine

CONDITIONS OF USE

Cold starting

Short journeys and frequent cold starting will not enable the engine to reach optimal running temperature. It follows therefore that consumption will be higher (from +15% to +30% in built-up areas) as will the production of toxic emissions.

Traffic and road conditions

heavy traffic and higher consumption are synonymous; for example, when driving slowly with frequent use of lower gears or in large towns where there are numerous traffic lights.

Winding roads, mountain roads and bumpy roads also have a negative effect on consumption.

Enforced halts

During prolonged hold-ups (traffic lights, level crossings) the engine should be switched off.

ECONOMY AND ENVIRONMENT-FRIENDLY DRIVING

Environment protection is one of the principles that guided the development of your **Alfa 156 GTA**.

It is not merely by chance that its antipollution devices obtain results far beyond those specified by current regulations.

The environment, however, still needs the utmost care from all of us.

By following few simple rules it is possible to avoid damage to the environment and very often at the same time to limit fuel consumption. On this subject we are giving some helpful suggestions to be added to those marked with the ⌃, in various points of this manual.

Kindly read them all carefully.

PROTECTING EMISSION REDUCING DEVICES

Correct operation of the antipollution devices not only guarantees respect for the environment but also influences car performance. Keeping these devices in good condition is therefore the first rule for both environment-friendly and economy driving.

The first precaution is to closely follow the "Programmed Maintenance Schedule". For petrol engines only use unleaded petrol (95 RON).

If difficulty with starting is experienced do not insist with extended attempts. Especially avoid bump, tow or coast starts: these may all damage the catalyst. Only use an auxiliary battery to start the car in an emergency.

Downloaded from www.Manualslib.com manuals search engine

If the engine is “not running smoothly“, when the vehicle is travelling, reduce the request for performance to a minimum and contact Alfa Romeo Authorized Services as soon as possible.

When the fuel reserve warning light comes on fill up as soon as possible. A low fuel level may cause an irregular supply to the engine with inevitable increase of the exhaust gas temperature; this would result in serious damage to the catalyst.

Never run the engine, even as a test, with one or more spark plugs disconnected. Do not warm the engine at idle speed before moving off, unless the outside temperature is very low and, in this case too, for no more than 30 seconds.

WARNING

Do not install other heat guards and do not remove the existing ones on the catalyst and exhaust pipe.

WARNING

Do not spray anything on the catalyst, lambda sensor and exhaust pipe.

WARNING

During normal service the catalyst reaches high temperatures. Do not therefore park the car over inflammable materials (grass, dry leaves, pine needles, etc.): fire hazard.

WARNING

The failure to follow these rules may cause a fire hazard.

TOWING TRAILERS

The car cannot towing trailers.

Downloaded from www.Manualslib.com manuals search engine

WINTER TYRES

These tyres are specially designed for driving on snow and ice, to be fitted in place of the existing tyres.

Use snow tyres of the same size as the normal tyres provided with the car.

Alfa Romeo Authorized Services will be glad to provide advice concerning the most suitable type of tyre for the customer's requirements.

For the type of tyre to be used, inflation pressures and the specifications of snow tyres, follow the instructions given in chapter "Technical specifications".

The winter features of these tyres are reduced considerably when the tread depth is below 4 mm. In this case, they should be replaced. Due to the snow tyre features, under normal conditions of use or on long motorway journeys, the performance of these tyres is lower than that of normal tyres.

It is therefore necessary to limit their use to the purposes for which they are certified.

IMPORTANT When snow tyres are used with a max. speed index below the one that can be reached by the car (increased by 5%), place a notice in the passenger compartment, plainly in the driver's view which states the max. permissible speed of the snow tyres (as per EC Directive).

All four tyres should be the same (brand and track) to ensure greater safety when driving and braking and better driveability.

Remember that it is inappropriate to change the direction of rotation of tyres.

WARNING

The max. speed for snow tyres with "Q" marking is 160 km/h; 190 km/h for tyres with "T" marking and 210 km/h for tyres with "H" marking. The Road Traffic Code speed limits must however be always strictly observed.

SNOW CHAINS

Use of snow chains should be in compliance with local regulations.

Use snow chains with reduced size with max. protrusion beyond the tyre profile of 12 mm.

Snow chains may not be used on tyres type 225/45 ZR 17". Only spider type chains can be used on tyres type 215/45 R17" and 215/45 ZR17". SPIKES SPIDER COMPACT snow chains (17003 compact model) with 9 arms and 16 mm adjustable length and 17" wheel cover adapter are available at Lineaccessori Alfa Romeo. Keep your speed down when this type of chains is fitted. Do not exceed 50 km/h with this type of chains, avoid sudden acceleration and deactivate the ASR system (the warning light on the button shall be on). Remember that snow chains make braking distance longer.

Downloaded from www.Manualslib.com manuals search engine

Snow chains should only be applied to the driving wheels (front wheels).

Alfa Romeo Authorized Services should first be contacted before purchasing or using snow chains.

Check the tension of the chains after the first few metres have been driven.

Keep your speed down when snow chains are fitted. Do not exceed 50 km/h. Avoid potholes, steps and pavements and avoid also to drive for long distances on roads not covered with snow to prevent damaging the car and the roadbed.

VEHICLE INACTIVITY

If the car is to be left inactive for long periods, the following precautions should be noted:

— House the vehicle under cover in a dry and possibly ventilated place.

— Engage a gear.

— Check that the handbrake is not engaged.

— Clean and protect the painted parts using protective wax.

— Disconnect the negative terminal (**—**) and check the battery charge. This check is to be repeated every three months. Recharge if the optical indicator shows a dark colour without the central green area.

IMPORTANT Switch off the electronic car alarm with the remote control.

— Clean and protect the shiny metal parts using special compounds readily available.

— Sprinkle talcum powder on the rubber windscreen and rear window wiper blades and lift them off the glass.

— Slightly open the windows.

— Cover the car with a cloth or perforated plastic sheet. Do not use sheets of non-perforated plastic as they do not allow moisture on the car body to evaporate.

— Inflate the tyres to 0.5 bar above the normal specified pressure and check it at intervals.

— If you don't disconnect the battery from the electric system, check its charge every month and recharge it if the optical indicator shows a dark colour without the central green area.

— Do not drain the engine cooling system.

Downloaded from www.Manualslib.com manuals search engine

REMOVING FROM STORAGE

Before using your vehicle after a long period of inactivity, the following operations should first be carried out:

— Do not dust the outside of the vehicle.

— Visually check that there are no leaks (oil, brake and clutch fluid, engine coolant, etc.).

— Replace engine oil and filter.

— Check:
- brake-clutch fluid level
- level of engine coolant fluid.

— Check the air cleaner and replace if necessary.

— Check tyre pressure and ensure that they are not damaged, cracked or cut. If they are they must be replaced.

— Check the state of the drive belts.

— Reconnect the battery negative terminal (**—**) after checking that the charge is adequate.

— With the gear lever in neutral start the engine and allow the engine to run for a few seconds whilst repeatedly working the clutch pedal.

WARNING

This operation must be performed in the open. The exhaust gases contain carbon monoxide which is extremely toxic and may also be lethal.

USEFUL ACCESSORIES

In addition to the legal requirements, we recommend keeping the following in the car (**fig. 1**):

— first aid kit with non-alcoholic base disinfectant, steril gauzes, a roll of gauze, plasters, etc.;

— torch;

— round-ended scissors;

— work gloves.

A0B0389m

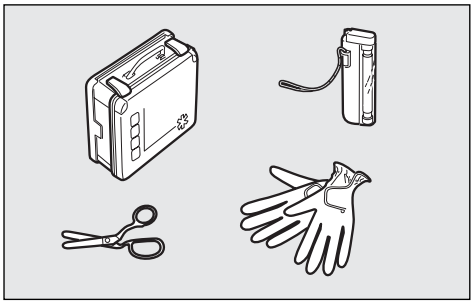

fig. 1

Downloaded from www.Manualslib.com manuals search engine

IN AN EMERGENCY

EMERGENCY STARTING

If the Alfa Romeo CODE system is not able to deactivate the engine inhibitor, warning lights CODE and remain lit and the engine cannot be started. To start the engine it is necessary to follow the emergency starting procedure.

IMPORTANT You are advised to carefully read the entire procedure before carrying it out.

If a mistake is made during the emergency procedure, the ignition key should be turned to **STOP** and the operations must be repeated from the start (point 1).

1) Read the 5-figure electronic code on the CODE card.

2) Turn the ignition key to the **MAR** position.

3) Fully depress the accelerator pedal and keep it pressed. The warning light will come on for eight seconds approximately and will then go out; now release the accelerator pedal.

4) The warning light begins to flash: after it has flashed for the same number of times as the first digit on the code of the card, press completely and hold down the accelerator pedal until the warning light comes on (for 4 seconds) and then goes out again; now release the accelerator pedal.

5) The warning light will begin to flash: after it has flashed for the same number of times as the second digit on the code of the card, press completely and hold down the accelerator pedal.

6) Repeat this procedure in the same way for the other digits on the CODE card code.

7) After entering the last figure, keep the accelerator pedal pressed. The warning light turns on (for four seconds) and then goes off; now release the accelerator pedal.

8) A quick flash of the warning light (for appr. 4 seconds) confirms that the operation has taken place correctly.

9) Start the car turning the ignition key from the **MAR** position to the **AVV** position without returning the key to the **STOP** position.

Conversely, if the warning light stays on, turn the ignition key to **STOP** and repeat the procedure starting from point 1).

IMPORTANT After emergency starting it is advisable to turn to an Alfa Romeo Authorized Service, because the procedure described must be repeated each time the engine is started.

Downloaded from www.Manualslib.com manuals search engine

STARTING WITH AN AUXILIARY BATTERY

If the battery is flat (for battery with optical hydrometer: dark in colour with no green area in the centre), the engine can be started using another battery of the same or a little higher capacity than the flat one.

This is what you should do **fig. 1**:

1) Remove the protecting cover on the battery positive pole by pressing the related side wings (front side), then connect the positive terminals (plus sign **+** next to the terminal) of the two batteries with a special cable.

2) Connect a second cable to the negative terminal (**–**) of the auxiliary battery with an earth point ⏚ on the engine or the gearbox of the car to be started.

A0B0181m

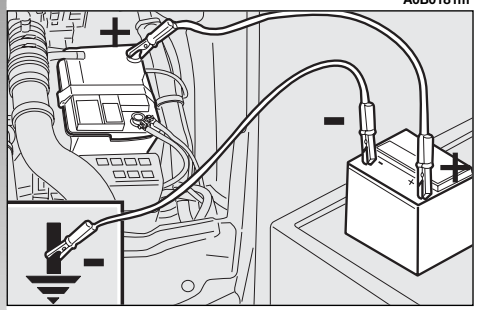

fig. 1

IMPORTANT Do not directly connect the negative terminals of the two batteries: any sparks may set fire to the gas that may be released from the battery. If the auxiliary battery in installed on another car, no metal part shall accidentally come into contact with this car and the one with the flat battery.

3) Start the engine.

4) When the engine is running remove the cables in reverse order.

If after a few attempts the engine does not start, do not insist but contact Alfa Romeo Authorized Services.

WARNING

This starting procedure must be carried out by qualified personnel as incorrect operations may provoke electrical discharge of great intensity. The liquid contained in the battery is toxic and corrosive. Avoid contact with skin and eyes. Keep naked flame and lighted cigarettes away from the battery. Do not cause sparks.

Never use a quick battery charger to start the engine in an emergency as this could damage the electronic systems of your vehicle, particularly the control units which manage the starting and supply functions.

The battery terminal connecting and disconnecting operations generate current that may cause problems to the car's electronic systems. Therefore, this operation should be carried out by skilled personnel.

Downloaded from www.Manualslib.com manuals search engine

STARTING BY INERTIA

Never push, tow or coast start the vehicle. This could cause fuel to flow into the catalyst damaging it irreversibly.

WARNING

Remember that the engine brake and power steering are not operational until the engine is started, therefore, much greater effort than usual is needed on the brake pedal and steering wheel.

IN THE EVENT OF A PUNCTURE

IMPORTANT The car is equipped with "Kit for tyre quick repair Fix&Go", see the instructions contained in the following chapter.

WARNING

Signal the presence of the stationary vehicle according to the current regulations: hazard warning lights, reflecting triangle, etc. Any passengers should leave the car.

WARNING

Should the type of wheels used be changed (alloy rims instead of steel), it is also necessary to replace the complete kit of fastening bolts with others of suitable size.

Downloaded from www.Manualslib.com manuals search engine

FIX&GO KIT FOR QUICK TYRE REPAIRING

The car is equipped with a tyre quick repairing kit called FIX&GO.

The quick repairing kit is placed in the boot inside the appropriate container (**A-fig. 10**).

The quick repairing kit includes (**fig. 11**):

– a tool (**A**) to remove the valve body;

– a compressor (**B**) with pressure gauge and fittings;

– a bottle (**C**) containing sealer and fitted with a filling pipe;

– a "spout" (**D**) to be connected to the filling pipe;

– a sticker bearing the notice "max 80 km/h", to be placed in a position visible to the driver (on the instrument panel) after fixing the tyre.

A0B0390m

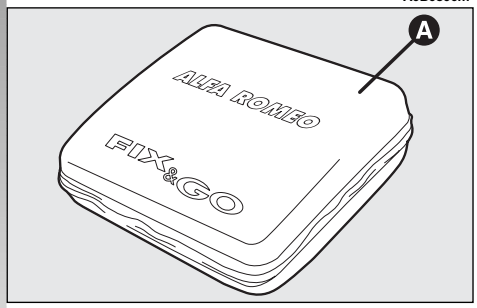

fig. 10

A0B0332m

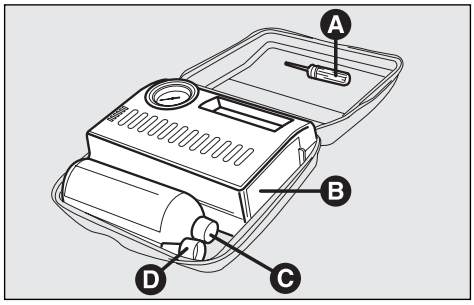

fig. 11

Downloaded from www.Manualslib.com manuals search engine

IMPORTANT In the event of a puncture caused by foreign bodies, it is possible to fix tyres having cracks with maximum diameter up to 4 mm.

In **fig. 12** it is possible to identify:

A - tyre area which can be fixed (holes or cracks with diameter of max 4 mm);

B - areas which CANNOT be fixed.

WARNING

It is not possible to fix cracks on the tyre sides and permanent sealing of cracks on the tread within 25 mm from the tyre side is not guaranteed.

WARNING

Do not use the quick repairing kit if the tyre is damaged due to driving with the wheel flattened. That it is why it is necessary to check accurately the tyre sides.

A0B0333m

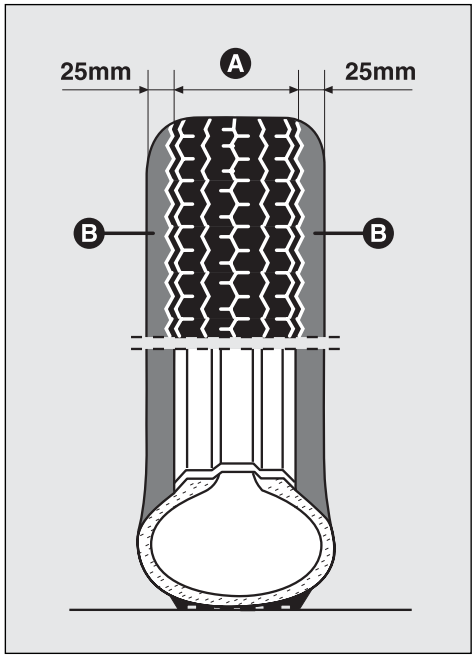

fig. 12

WARNING

In case of damages to the wheel rim (the deformation is such that there is an air leakage) or the tyre outside the limit areas previously indicated, fixing is not possible. Do not remove foreign bodies (screws or nails) which have penetrated the tyre.

Downloaded from www.Manualslib.com manuals search engine

WARNING

Warning! The bottle (C-fig. 11) contains propylene glycol. This substance is toxic: do not swallow it and avoid contact with the eyes, the skin and the clothes. In case of contact, rinse with abundant water. If any allergy reaction should take place call a medical doctor. Keep the bottle in the appropriate compartment away from heat and children.

IT IS NECESSARY TO KNOW THAT:

WARNING

Do not operate the compressor for more than 20 minutes: risk of overheating!

The sealer included in the quick repairing kit, good for temperatures between –30°C and +80°C, is not adequate for permanent fixing.

The liquid inside the tyre can be easily removed with water.

The sealer has no expire date.

INFLATING PROCEDURE (fig. 13-14-15-16-17-18-19)

– Place the wheel in the position illustrated in the figure (**A**) for the operation with the valve, **then engage the handbrake**.

– Screw the filling pipe (**B**) to the bottle (**C**).

– Unscrew the tyre valve plug, remove the element inside the valve by using the appropriate tool (**D**); be careful not to place it on the sand or on a dirty surface.

– Introduce the filling pipe (**B**) in the tyre valve, keep the bottle (**C**) with the pipe directed downwards, then press the bottle so that the whole sealer can get into the tyre.

A0B0422m

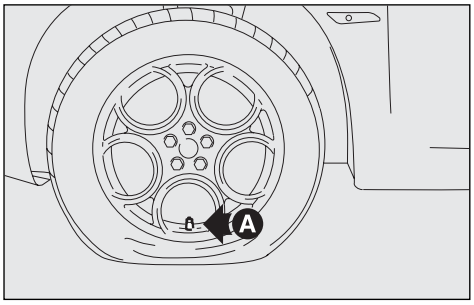

fig. 13

Downloaded from www.Manualslib.com manuals search engine

— Screw again the element inside the valve with the tool (**D**).

— Use the appropriate lever (**E**) to insert and clamp the air compressor pipe (**F**) to the tyre valve.

— Start the engine, insert the plug (**G**) in the lighter (or current socket, where fitted) and inflate the tyre according to the right pressure value (see "Cold inflation pressures" in the "Technical specifications" chapter). You are advised to check the tyre pressure value on the pressure gauge (**H**) with the compressor off, in order to have a more accurate reading.

If it is not possible to reach the prescribed pressure, move the car forwards or backwards for about 10 metres, so that the sealer is distributed inside the tyre, then repeat inflation.

If, in spite of the last operation, the prescribed pressure is not achieved, do not move the vehicle and contact Alfa Romeo Authorized Services.

Once the correct tyre pressure has been reached, start driving immediately so that the sealer is distributed evenly inside the tyre.

WARNING

Place the sticker in a position where it can be clearly seen by the driver as a notice that the tyre has been treated with the quick repairing kit. Drive carefully especially in a bend. Do not overcome 80 km/h. Avoid sudden acceleration or braking.

After about 10 minutes, stop and check the tyre pressure once again; remember to engage the handbrake.

A0B0335m

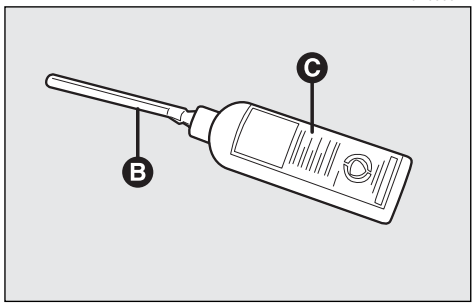

fig. 14

A0B0423m

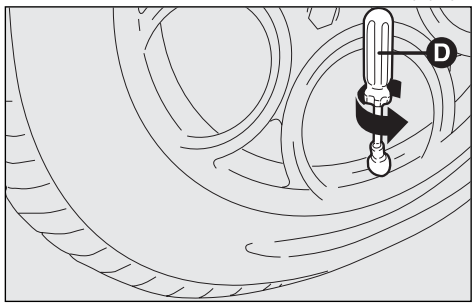

fig. 15

A0B0424m

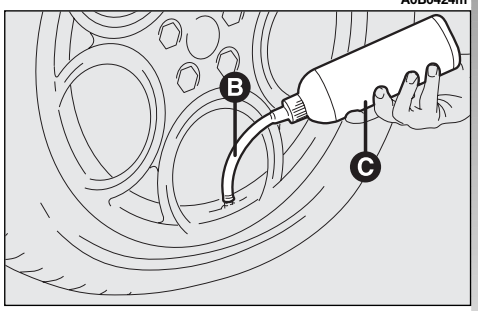

fig. 16

Downloaded from www.Manualslib.com manuals search engine

WARNING

If the pressure is below 1.3 bars, do not drive any further: the quick repairing kit cannot guarantee proper hold because the tyre is too much damaged. Contact Alfa Romeo Authorized Services.
Conversely, if at least 1.3 bars are detected, restore the correct pressure (with the engine running and the handbrake engaged) and start driving the car with great care.

WARNING

If, during the pressure restoring operation, it is not possible to reach at least 1.8 bars, do not drive any further because the tyre is too much damaged and the quick repairing kit cannot guarantee proper hold. Contact Alfa Romeo Authorized Services.

WARNING

Tyres fixed with the quick repairing kit must be used only temporarily.

Drive carefully to the nearest Alfa Romeo Authorized Service to check the tyre conditions, then have it fixed or replaced.

It is absolutely necessary to communicate that the tyre has been fixed with the quick repairing kit.

A0B0425m

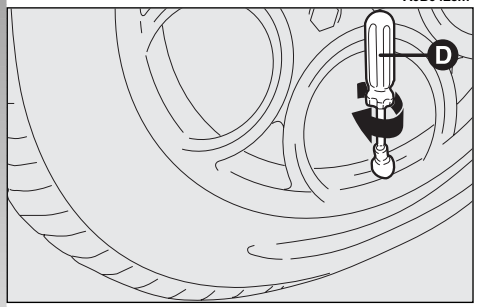

fig. 17

A0B0426m

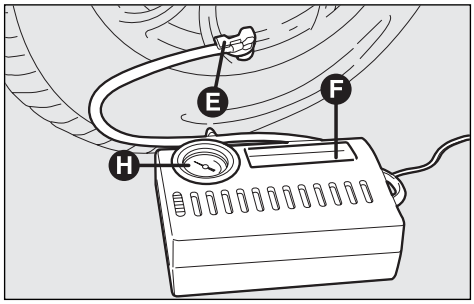

fig. 18

A0B0391m

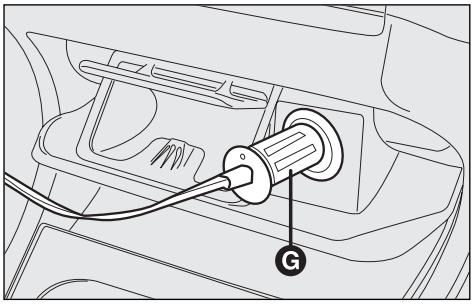

fig. 19

Downloaded from www.Manualslib.com manuals search engine

WHEN NEEDING TO CHANGE A BULB

WARNING

Alterations or repairs to the electric system not carried out correctly and without taking into account the specifications of the system may cause malfunctioning and the risk of fire.

WARNING

Halogen bulbs must be handled touching only the metallic part. If the transparent bulb is touched with the fingers its lighting intensity is reduced and the life of the bulb may be compromised. If touched accidentally, rub the bulb with a cloth moistened with methylated spirits and allow

WARNING

Possible replacement of a light on vehicles equipped with Xenon lamps must be carried out by Alfa Romeo Authorized Services.

WARNING

Where possible the bulbs should be replaced by Alfa Romeo Authorized Services. The correct operation and positioning of the external lights are vital to the safety of the vehicle and its passengers and the subject of specific laws.

WARNING

Halogen bulbs contain pressurised gas, in the case of breakage they may burst.

Downloaded from www.Manualslib.com manuals search engine

GENERAL INSTRUCTIONS

— When a light is not working check the corresponding fuse is intact before replacing the bulb.

— For the location of fuses, refer to the paragraph "In the event of a burnt fuse" in this chapter.

— Before changing a bulb check the contacts for oxidation.

— Burnt bulbs must be replaced with others of the same type and power.

— Always check the height of the headlight beam after changing a bulb to ensure they are safe.

IMPORTANT On the inside surface of the headlight there could appear a slight coat of fogging; this does not show a defect, since it is a natural occurrence due to low temperature and to the degree of humidity in the air; it will soon disappear as soon as the lights are turned on. The presence of drops inside the headlight shows water seepage, refer to an Alfa Romeo Authorized Service.

TYPES OF BULBS (fig. 20)

Various types of bulbs are fitted to your vehicle:

A. All glass bulbs
They are pressure-fitted. Pull to remove.

B. Bayonet type bulbs
Press the bulb, turn counter-clockwise to remove this type of bulb from its holder.

C. Tubular bulbs
Free them from their contacts to remove.

D. Halogen bulbs
To remove free it from the clip on its seating.

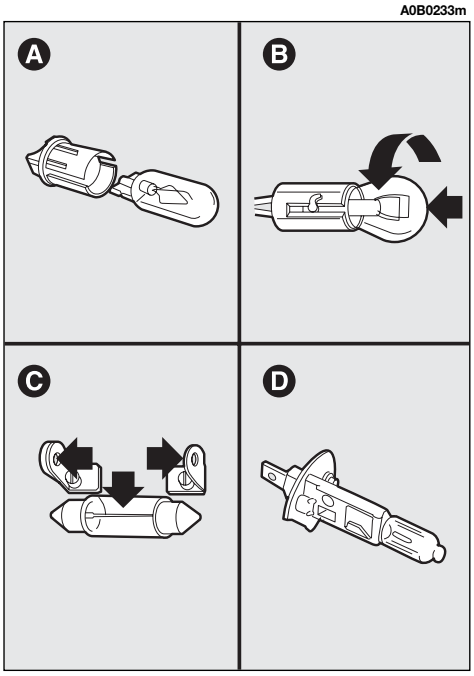

fig. 20

Downloaded from www.Manualslib.com manuals search engine

BULBS	FIGURE 20	TYPE	POWER
High beam	D	H1	55W
Low beam	D	H7	55W
Front sidelight	B	H6W	6W
Foglight	D	H1	55W
Front direction indicator	B	PY21W	21W
Side direction indicator	A	W5W	5W
Rear direction indicator	B	P21W	21W
Stop/side light	B	P21/5W	21W/5W
Additional stop light	B	3.2W	3.2
Reversing light	A	P21W	21W
Rear fog guard	B	P21W	21W
Number plate light	B	W5W	5W
Front roof light	A	C10W	10W
Boot light	C	C10W	10W
Rear roof light	C	C5W	5W
Courtesy light	C	C5W	5W
Glovebox light	C	C5W	5W

Downloaded from www.Manualslib.com manuals search engine

IF ONE OF THE EXTERNAL LIGHTS GOES OUT

WARNING

Alterations or repairs to the electric system not carried out correctly and without taking into account the specifications of the system may cause malfunctioning and the risk of fire.

IMPORTANT For the type and power of the light refer to what described in the previous chapter "When needing to change a bulb".

FRONT LIGHT UNITS

The front light units contain the direction indicators, side lights/dipped and main beam light bulbs.

To replace these bulbs the cover must be removed turning counter-clockwise.

The bulbs are arranged inside the light units as follows (**fig. 21**):

A. Direction indicators

B. Dipped beam headlights

C. Sidelight/main beam headlights

When the bulbs have been replaced refit the cover in the correct position turning clockwise and ensuring that it clicks into place.

Fig. 22: Dipped beam headlights with Xenon lamp

A. Sidelight/main beam headlights

B. Dipped beam headlights/sidelight

A0B0224m

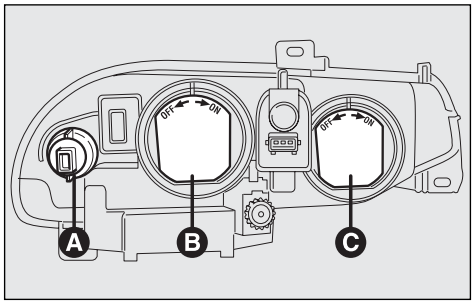

fig. 21

A0B0392m

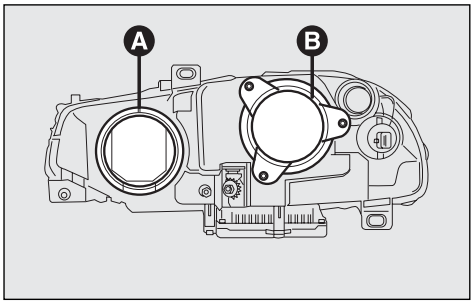

fig. 22

Downloaded from www.Manualslib.com manuals search engine

REPLACEMENT OF XENON LIGHTS (optional for versions/markets where applicable)

Xenon lights have a very long life, therefore breakdowns are unlikely.

WARNING

If necessary, have the system checked and repaired only by Alfa Romeo Authorized Services.

Hereafter you find the description of the correct procedure to replace a Xenon light.

WARNING

Any operation regarding the front light units must be carried out with the lights turned off and the ignition key removed from the ignition switch: risk of electric discharges.

Dipped-beam headlamps

To replace the bulb proceed as follows:

— Unscrew the three locking screw (**B-fig. 23**) and remove the protective (**A**) cover.

A0B0348m

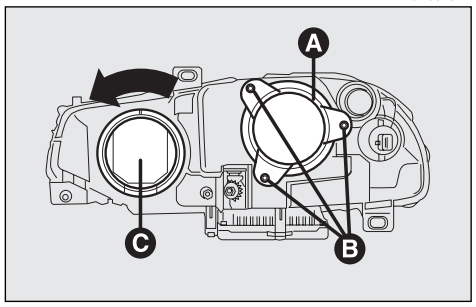

fig. 23

— Rotate the connector (**B-fig. 24**) of the Xenon lamp by a quarter of a turn counterclockwise, as indicated in (**fig. 25**) and remove it.

A0B0349m

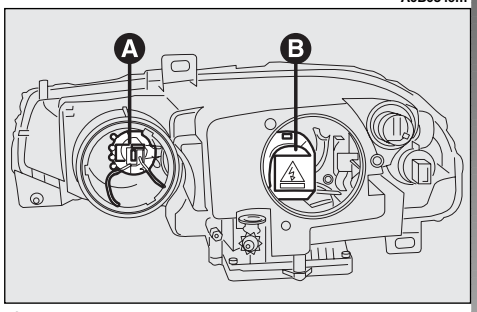

fig. 24

A0B0351m

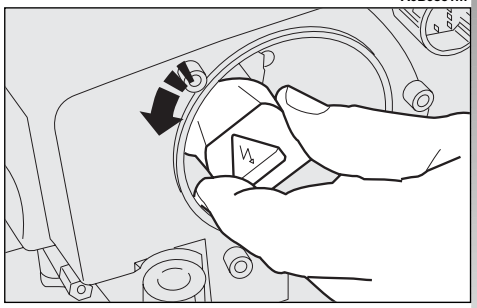

fig. 25

Downloaded from www.Manualslib.com manuals search engine

The Xenon lamp must be handled touching only the metallic part. If the transparent bulb is touched with the fingers, rub it with a clean cloth moistened with methylated spirits and allow to dry before refitting the bulb.

IMPORTANT Once the operation has been completed, turn dipped beam headlamps on and check that the headlight lens moves when positioning the light itself. If not, re-engage the light aiming motor to the lens as previously described.

— Turn ring (**A-fig. 26**) counterclockwise and remove it.

— Remove the Xenon lamp (**B-fig. 26**).

— Fit the new bulb by placing it so that the notch matches the groove on its housing.

— Refit the protective cover correctly (**A-fig. 23**).

Main beam headlamps

To replace the bulb proceed as follows:

— Turn the protective cover counter-clockwise (**C-fig. 23**) in order to reach the high-beam headlight bulb (**A-fig. 24**).

— Remove connector (**A-fig. 27**) and remove the bulb operating the clips (**B**) as shown in the figure.

— Fit the new bulb.

— Refit the protective cover correctly (**C-fig. 23**).

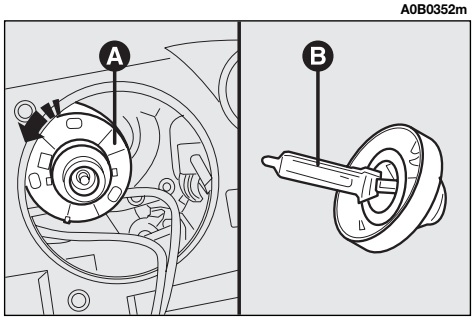

fig. 26

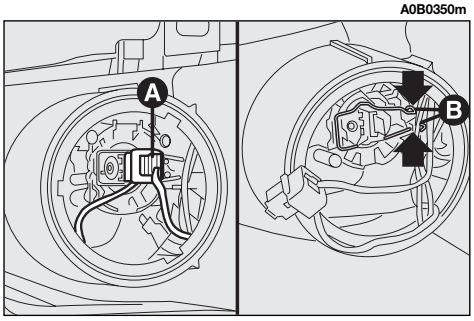

fig. 27

Downloaded from www.Manualslib.com manuals search engine

Sidelights

To replace the bulb proceed as follows:

— Turn the protective cover (**C-fig. 23**) counter-clockwise in order to reach the sidelight bulb.

— Remove the bulb (**A-fig. 28**) from the bulb holder (**B**), pushing lightly and turning counter-clockwise.

— Replace the bulb and refit the bulb holder (**B-fig. 28**) in its housing.

— Refit the protective cover correctly (**C-fig. 23**).

Direction indicators

To replace the bulb proceed as follows:

— Turn the cover counter-clockwise (**A-fig. 29**).

— Turn the bulb holder (**B**) counter-clockwise.

— Remove the bulb from the bulb holder, pushing lightly and turning counter-clockwise.

— Replace the bulb and refit the bulb holder in its housing.

FRONT DIRECTION INDICATORS

To replace the bulb (orange colour), proceed as follows:

— Turn the bulb holder counter-clockwise (**A-fig. 30**) and remove it.

— Remove the bulb (**B-fig. 31**) from the bulb holder (**A-fig. 31**), pushing lightly and turning counter-clockwise.

— Replace the bulb (**B-fig. 31**).

A0B0354m

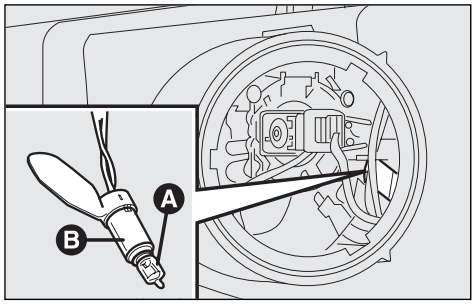

fig. 28

A0B0353m

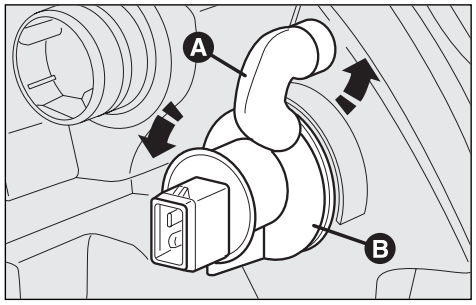

fig. 29

A0B0225m

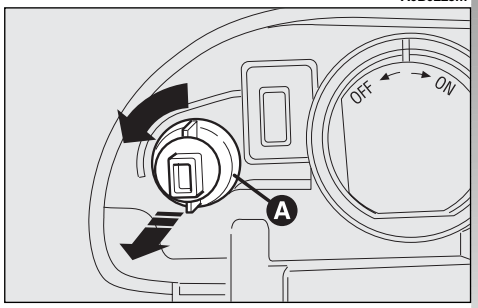

fig. 30

Downloaded from www.Manualslib.com manuals search engine

— Refit the bulb holder (**A-fig. 31**) by making its notches coincide with the grooves in the headlight unit body and turn it clockwise.

DIPPED-BEAM HEADLAMPS (fig. 32)

To replace the bulb proceed as follows:

— Remove the protective cover

— Disconnect the electrical connector (**A**).

— Release the bulb catch (**B**).

— Withdraw the bulb and replace it.

— Fit the new bulb making the tabs of the metallic part coincide with the grooves in the headlamp lens and hook the bulb catch (**B**).

— Reconnect the electrical connector (**A**).

— Refit the protective cover correctly.

FRONT FOG LIGHTS

To replace the bulb proceed under the car as follows:

— Loosen the screw (**A-fig. 33**) and remove the protection cover (**B**).

— Release catch (**C-fig. 34**) and disconnect connector(**D**) from the light unit.

— Turn cover (**E**) counterclockwise and remove it.

— Withdraw the supply cable terminal (**F-fig. 35**).

— Release the bulb stopper (**G**) and remove the bulb.

A0B0221m

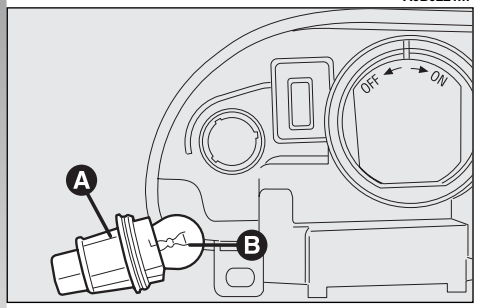

fig. 31

A0B0222m

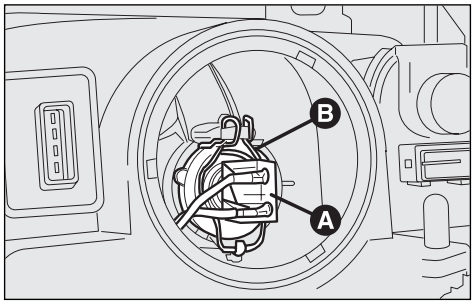

fig. 32

A0B0319m

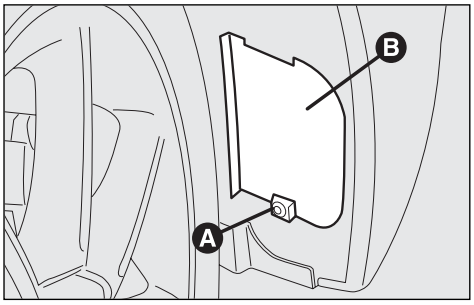

fig. 33

Downloaded from www.Manualslib.com manuals search engine

— Fit a new bulb making the tabs of the metallic part coincide with the grooves in the lamp lens and hook the bulb stopper (**G-fig. 35**).

— Refit the supply cable terminal (**F-fig. 35**).

— Refit cover (**E-fig. 34**) and reconnect connector (**D-fig. 34**) to the light unit.

To adjust the front fog-lights contact Alfa Romeo Authorized Services.

WARNING

The efficiency of the lights will be decreased and may inconvenience other road users if the light units are not correctly adjusted. If in doubt contact Alfa Romeo Authorized Services to have them checked and adjusted if necessary.

FRONT SIDELIGHTS

To replace the bulb proceed as follows:

— Remove the protective cover (**A-fig. 36**).

— Remove the bulb holder (**B-fig. 36**) which is snap-fitted.

— Remove the bulb (**C-fig. 37**)from the bulb holder, pushing lightly and turning counter-clockwise.

— Replace the bulb and refit the bulb holder (**B-fig. 37**) in its housing.

— Refit the protective cover correctly (**A-fig. 36**).

A0B0328m

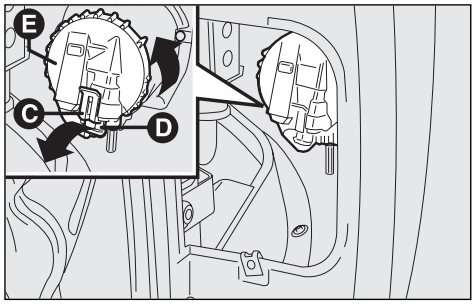

fig. 34

A0B0355m

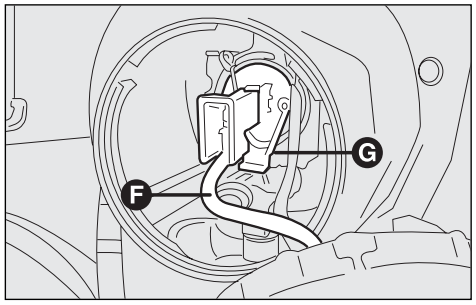

fig. 35

A0B0217m

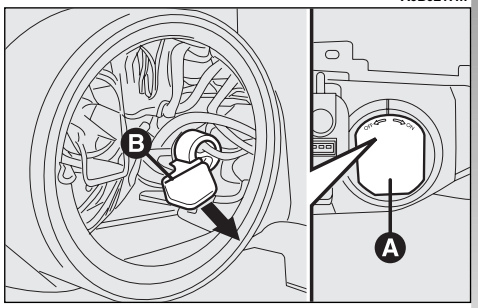

fig. 36

Downloaded from www.Manualslib.com manuals search engine

MAIN-BEAM HEADLAMPS (fig. 38)

To replace the bulb proceed as follows:

— Remove the protective cover.

— Release the clip holding the bulb (**A**).

— Withdraw the power supply (**B**) cable connector.

— Remove and (**C**) replace the bulb.

— Reconnect the power cable (**B**) to the bulb.

— Fit the new bulb making the tabs of the metallic part coincide with the grooves in the headlamp lens.

— Lock the bulb in place with the clip (**A**).

— Refit the protective cover correctly.

SIDE DIRECTION INDICATORS

To replace the bulb proceed as follows:

— Push the transparent cover towards the rear of the car to compress the tab (**A-fig. 39**). Release the front part and remove the unit.

— Turn the bulb holder counter-clockwise (**B-fig. 40**) and remove it from the transparent cover (**D-fig. 40**).

A0B0218m

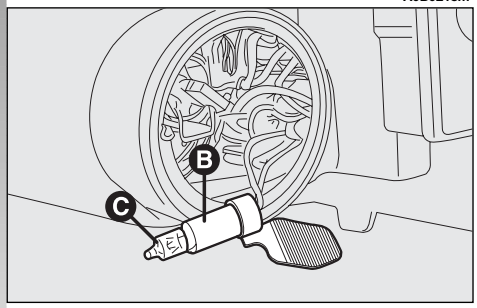

fig. 37

A0B0223m

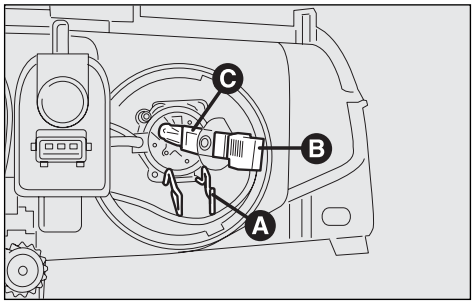

fig. 38

A0B0219m

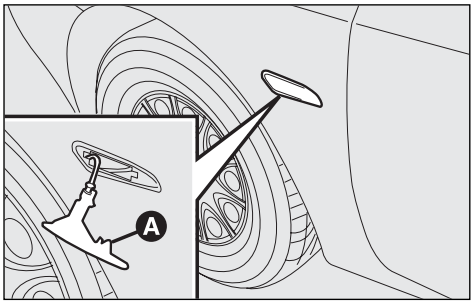

fig. 39

Downloaded from www.Manualslib.com manuals search engine

— Withdraw the bulb (**C-fig. 40**) which is of the pressure-fitted type and replace it.

—Insert the bulb holder (**B-fig. 40**) in the transparent cover (**D-fig. 40**) and position the unit ensuring that the clip clicks into place (**A-fig. 39**).

Take care not to damage the bodywork or the transparent cover when removing the side direction indicator unit.

REAR LIGHT UNITS

Rear light units contain the reversing lights, rear fog guards, direction indicators, number plate lights, stop/side lights and the additional stop light (3rd stop).

REVERSING LIGHTS AND REAR FOG GUARDS

To replace the bulbs proceed as follows:

— Open the boot.

— Slacken the screws (**A** or **B-fig. 41**) fastening the boot trim in correspondence with the light concerned.

— Lower the boot lid trim in the corresponding area and remove the bulb holder unit (**C-fig. 42**) releasing the retainer tab (**B-fig. 42**).

— Remove and replace the spherical type bulb with bayonet attachment pushing it gently and turning counter-clockwise (**fig. 43**):

(**D**) reversing light bulb

(**E**) rear fog guard bulb.

A0B0220m

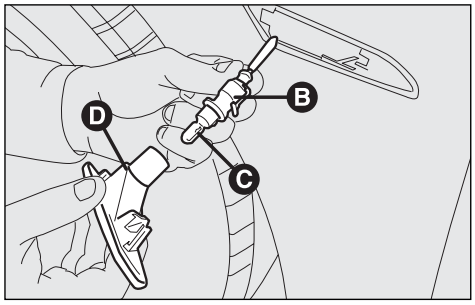

fig. 40

A0B0211m

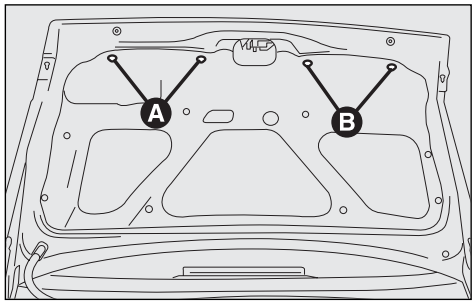

fig. 41

A0B0212m

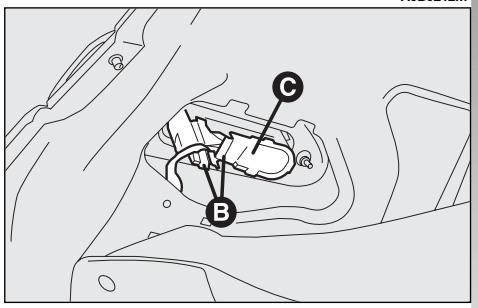

fig. 42

Downloaded from www.Manualslib.com manuals search engine

— Refit the bulb holder unit fastening it correctly in place with the retainer tabs (**B-fig. 42**).

— Refit the boot trim fastening it with the screws removed previously.

DIRECTION INDICATORS/ SIDELIGHTS AND STOP LIGHTS

To replace the bulbs proceed as follows:

— Open the boot.

— Slacken the two fastening screws (**A-fig. 44**) and remove the protective cover (**B-fig. 44**).

— Withdraw the bulb holder unit (**A-fig. 45**) releasing the retainer tabs (**B-fig. 45**).

— Remove and replace the bulb concerned (spherical with bayonet coupling) pushing it gently and turning counter-clockwise (**fig. 46**).

(**C**) side light/stop light bulb

(**D**) direction indicator bulb.

— Refit the bulb holder unit fastening it correctly in place with the retainer tabs (**B-fig. 45**).

— Refit the protective cover (**B-fig. 44**) fastening with nuts (**A-fig. 44**).

A0B0213m

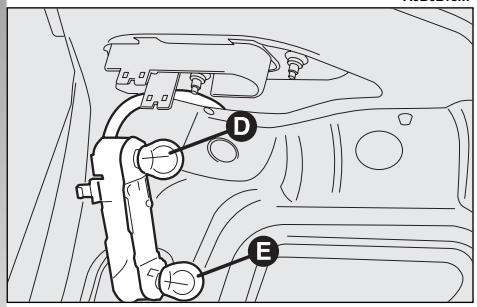

fig. 43

A0B0214m

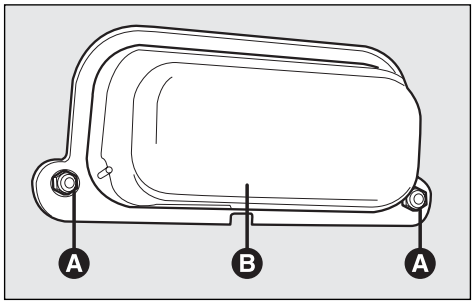

fig. 44

A0B0207m

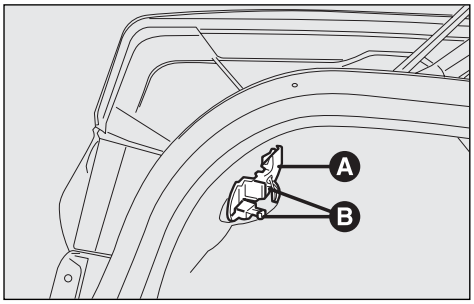

fig. 45

Downloaded from www.Manualslib.com manuals search engine

NUMBER PLATE LIGHTS

To replace the bulbs proceed as follows:

— Remove the number plate light unit using a flat screwdriver protected by a soft cloth on the stopper (**A-fig. 47**).

— Remove the unit (**B-fig. 47**).

— remove the bulb holder (**C-fig. 48**) turning lightly and replace the bulb (**D-fig. 48**) which is pressure-fitted.

— Refit the bulb holder (**C-fig. 48**) turning gently.

— Refit the complete unit (**B-fig. 47**) firstly inserting the catches and then pressing in correspondence with the stopper (**A-fig. 47**).

A0B0209m

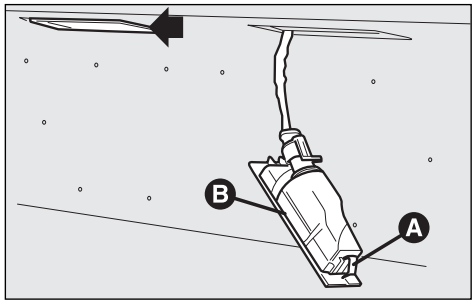

fig. 47

A0B0208m

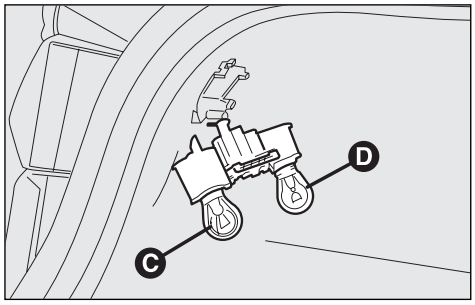

fig. 46

A0B0210m

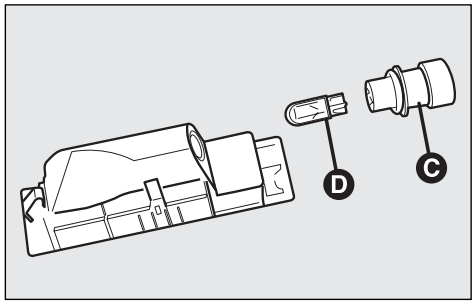

fig. 48

ADDITIONAL STOP LIGHT (3rd STOP)

To replace the bulbs proceed as follows:

— Open the boot.

— Turn the fastening buttons (**A-fig. 49**) until they release and lower the trim.

— Slacken the knob (**B-fig. 50**)and withdraw the complete unit.

— Slacken the screws (**C-fig. 51**).

— Remove the transparent cover (**D-fig. 52**) and replace the bulb concerned.

A0B0192m

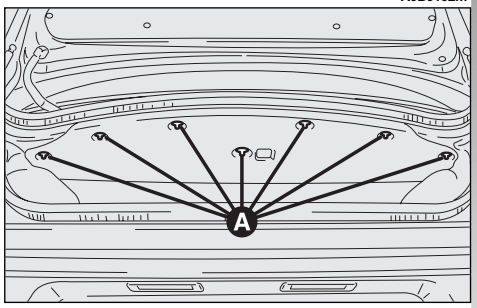

fig. 49

Downloaded from www.Manualslib.com manuals search engine

— Refit the transparent cover and install the unit locking it with the knob (**B-fig. 50**).

— Re-position the trim correctly and fasten with its buttons (**A-fig. 49**).

A0B0204m

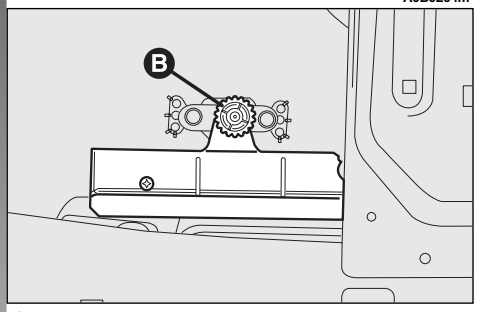

fig. 50

IF ONE OF THE INTERNAL LIGHTS GOES OUT

FRONT ROOF LIGHT

To replace the bulbs proceed as follows:

— Remove the roof light (**A-fig. 53**) levering in the points shown by the arrows.

— Open the cover (**B-fig. 54**).

— Replace the bulb concerned (**C-fig. 54**) by pulling it outwards and freeing it from the lateral contacts ensuring that the new bulb is correctly fitted between the contacts.

To refit the rooflight reverse the procedure followed for removal.

When refitting the rooflight ensure that the electrical wiring is correctly arranged and does not interfere with the edges of the light or retaining clips.

A0B0205m

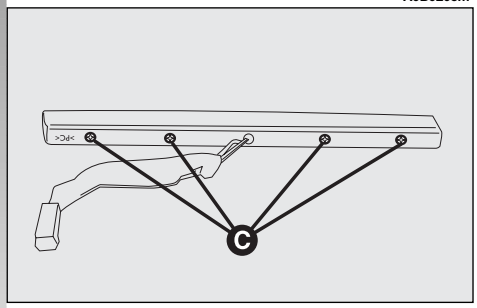

fig. 51

A0B0206m

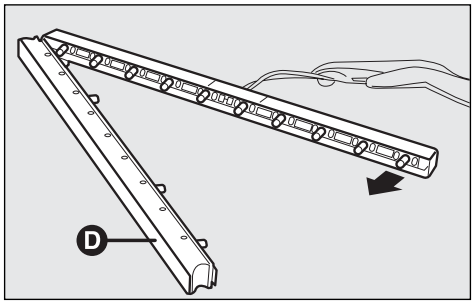

fig. 52

A0B0200m

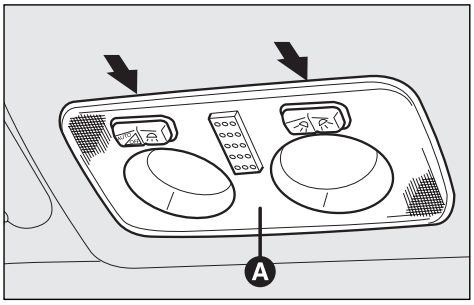

fig. 53

Downloaded from www.Manualslib.com manuals search engine

REAR ROOFLIGHT BULBS (except versions with sunroof)

To replace the bulbs proceed as follows:

— Remove the rooflight (**A-fig. 55**) levering in the point shown by the arrow.

— Remove the bulb (**B-fig. 56**) pulling outwards and releasing it from the side contacts.

— Fit the new bulb making sure that it is positioned correctly and locked between the contacts.

— Refit the light firstly inserting the side with the connector and then pressing on the other side until the catch clocks into place.

A0B0202m

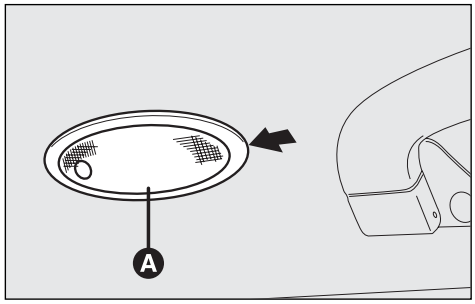

fig. 55

A0B0201m

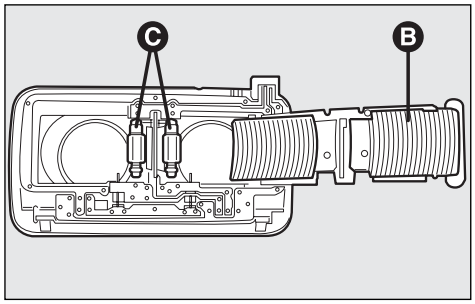

fig. 54

A0B0203m

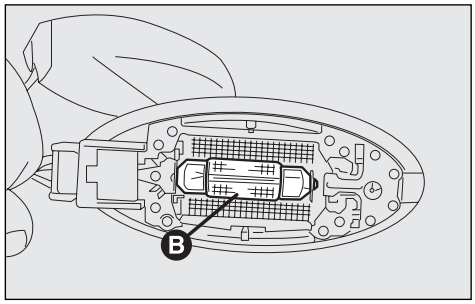

fig. 56

CENTRE REAR ROOF LAMP (only versions with sunroof)

To remove the bulb proceed as follows:

— Remove the rooflight (**A-fig. 57**) levering in the point shown by the arrow.

— Remove the bulb (**B-fig. 58**) pulling outwards and releasing it from the side contacts.

— Fit the new bulb making sure that it is positioned correctly and locked between the contacts.

— Refit the roof light firstly inserting the side (**C-fig. 58**) and then pressing on the other side until the catch clicks into place.

A0B0196m

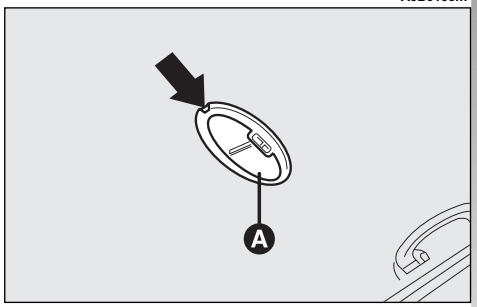

fig. 57

Downloaded from www.Manualslib.com manuals search engine

COURTESY LIGHT

To remove the bulb proceed as follows:

— Remove the roof light (**A-fig. 59**) levering in the point shown by the arrow.

— Remove the bulb (**B-fig. 60**) pulling it outwards and releasing it from the side contacts.

— Fit the new bulb making sure that it is positioned correctly and locked between the contacts.

— Refit the roof light, inserting it in the correct position firstly on one side and then pressing on the other until the tab clicks.

GLOVEBOX LIGHT

To remove the bulb proceed as follows:

— Remove the light pushing with a screwdriver on the tab (**A-fig. 61**).

— Remove the cover (**B-fig. 62**).

A0B0198m

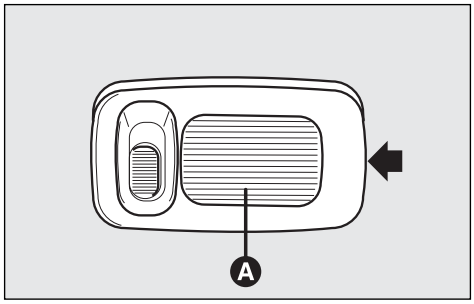

fig. 59

A0B0195m

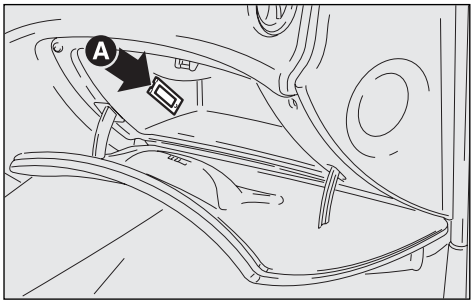

fig. 61

A0B0197m

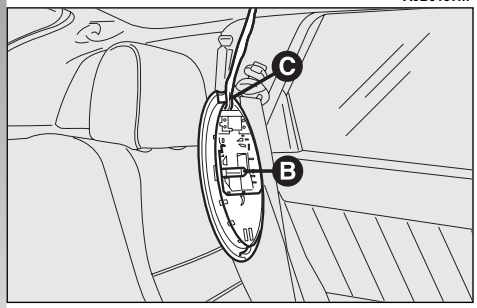

fig. 58

A0B0199m

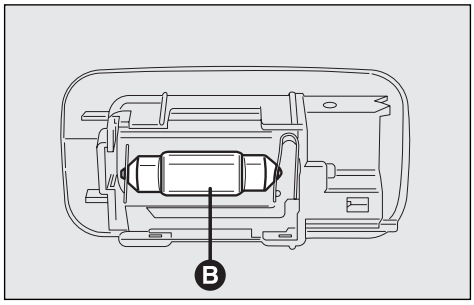

fig. 60

A0B0194m

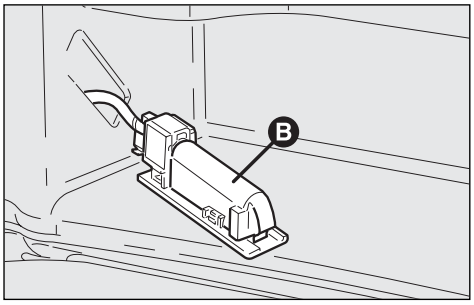

fig. 62

Downloaded from www.Manualslib.com manuals search engine

— Change the bulb (**C-fig. 63**) which is pressure-fitted.

— Refit the cover (**B-fig. 62**).

— Re-install the light inserting it in the correct position firstly on one side and then pushing on the other until the tab clicks.

LUGGAGE COMPARTMENT LIGHT

To remove the bulb proceed as follows:

— Open the boot.

— Turn the fastening buttons (**A-fig. 64**) until they click and lower the trim.

— Withdraw the clear plastic cover and bulb (**A-fig. 65**) using a flat-bladed screwdriver.

— Replace the bulb (**B-fig. 66**)of the cylindrical type pulling it outwards ensuring that the new bulb is correctly positioned between the contacts.

— Refit the transparent cover ensuring that the retaining tabs click into place (**C-fig. 66**).

A0B0191m

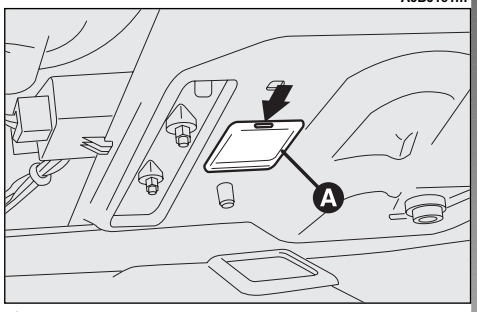

fig. 65

A0B0193m

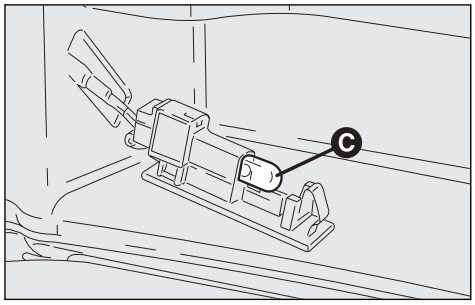

fig. 63

A0B0192m

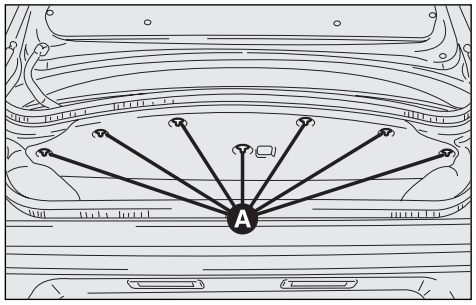

fig. 64

A0B0190m

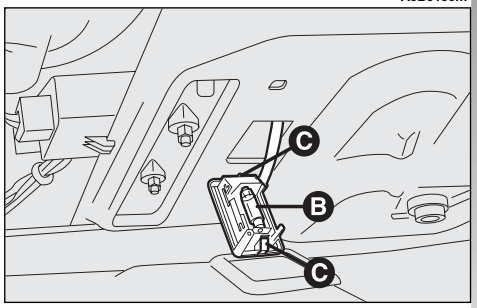

fig. 66

Downloaded from www.Manualslib.com manuals search engine

IN THE EVENT OF A BURNT FUSE

GENERAL

The fuse (**fig. 67**) is a protective element of the electrical system: basically it operates (i.e. it gets disconnected) in case of breakdown or wrong operation on the system.

When an electrical devices ceases to function, make sure it has not fused. The filament must not be broken: if so, replace the burnt fuse with another of the same value (same colour).

(**A**) - Intact fuse

(**B**) - Fuse with broken filament.

Extract the fuse to be replaced using the pincers (**C**)situated on the fuse box.

WARNING

If a main protective fuse (MAXI-FUSE o MEGA-FUSE) intervenes, do not fix it but contact an Alfa Romeo Authorized Service.

Never replace a broken fuse with anything other than a new fuse. Use always an intact fuse of the same colour.

WARNING

Before replacing a fuse check that the key has been removed from the ignition and that all the services are switched off and/or disengaged.

A0B0189m

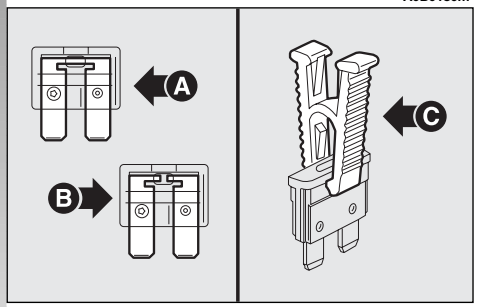

fig. 67

WARNING

Never replace a fuse with another with a higher amp rating, DANGER OF FIRE!

WARNING

If a fuse blows again contact Alfa Romeo Authorized Services.

Downloaded from www.Manualslib.com manuals search engine

The general protection fuses of **Alfa 156 GTA** are in the engine compartment, inside a container near the battery positive terminal; to gain access to the fuses lift the two lids (**fig. 68** and **fig. 69**).

FUSE AND RELAYS IN THE MAIN FUSEBOX (fig. 70)

The fuses for the main devices are housed in a control unit under the dashboard, to the left of the steering column.

To gain access to them , remove the panel (**A**) releasing the tabs (**B**) in the direction of the arrow below and unlock the screw (**C**).

A. Dipped beam light relay

B. Relay for sunroof , seat heater, rear window power control, seat electric adjustment.

The symbols that identify the main electric component protected by each fuse, are shown on the label (**fig. 71**) on the inner side of the panel (**A-fig. 70**).

Some spare fuses are housed at the right of the control unit (**D-fig. 70**); you are advised to replenish the stock of spare fuses when they are used.

A0B0188m

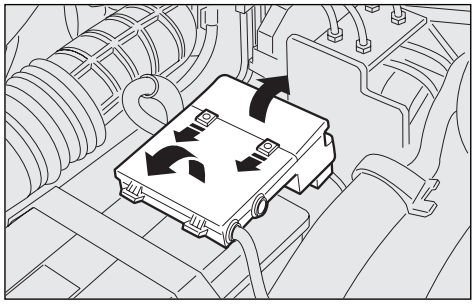

fig. 68

A0B0189m

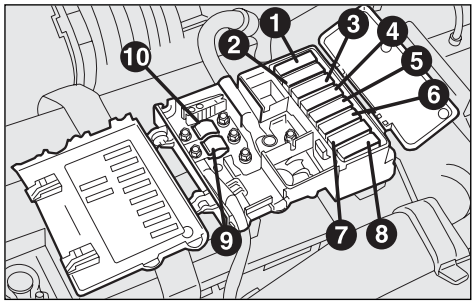

fig. 69

A0B0172m

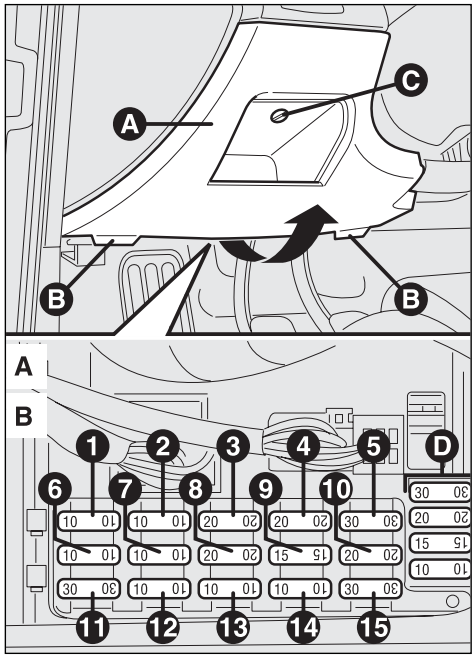

fig. 70

A0B0185m

10A	10A	20A	20A	30A
10A	10A	20A	15A	20A
20A	SERVIZI SERVICES 10A	SERVIZI SERVICES 10A	10A	30A

fig. 71

Downloaded from www.Manualslib.com manuals search engine

FUSES ABOVE THE MAIN FUSEBOX (fig. 72)

The protection fuses of certain devices are grouped together on three containers located above the main fusebox to which access is gained removing the panel (**A-fig. 70**).

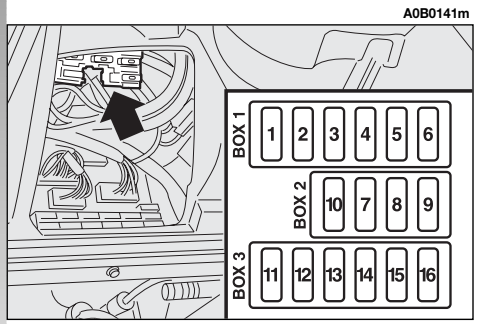

fig. 72

FUSES AND RELAYS ACCESSIBLE FROM THE GLOVEBOX

Some fuses and relays for services supplied on request or only for certain specific market versions are located on a bracket behind the glovebox.

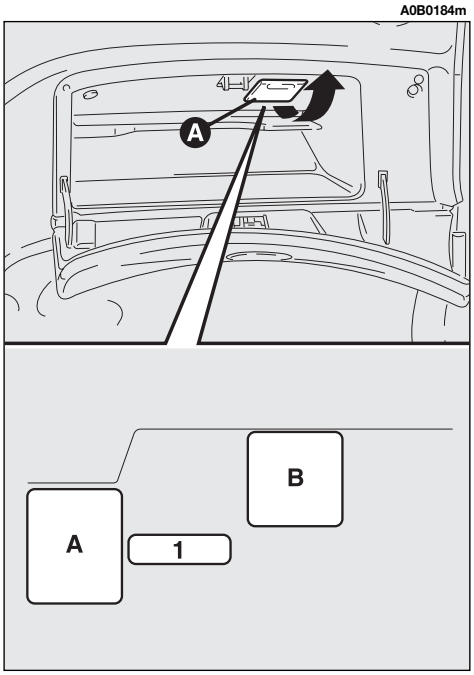

fig. 73

To gain access to the fuses remove (**A-fig. 73**) the pressure-fitted lid.

Access to the relays is gained by removing the glovebox: contact Alfa Romeo Authorized Services.

A. Fog light relay.

B. Headlamp washer timer.

Downloaded from www.Manualslib.com manuals search engine

FUSES AND RELAYS IN ENGINE BAY

In the engine compartment, housed on a bracket in front of the battery and protected by a special cover, there is a variable number of fuses and relays depending on the versions.

IMPORTANT The arrangement of the fuses and relays may vary depending on the versions and markets. In the event of a suspected anomaly, contact Alfa Romeo Authorized Services.

Remove the cover (**A-fig. 74**) to gain access to the following relays (**fig. 75**):

A. Engine radiator cooling fan 2nd speed relay.

B. Engine radiator cooling fan 1st speed relay.

C. Fuel pump relay

D. Electronic injection relay

E. Climate control compressor relay

F. Engine radiator fan 2nd speed relay.

A0B0154m

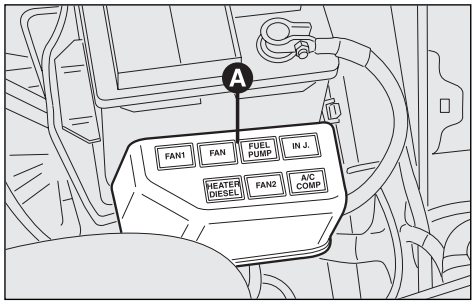

fig. 74

A0B0430m

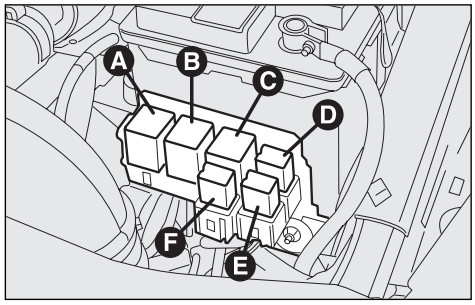

fig. 75

Downloaded from www.Manualslib.com manuals search engine

FUSE SUMMARY TABLE

LIGHTS	FUSE	AMPERAGE	FIGURE
Left front side light	7	10A	70
Right front side light	6	10A	70
Left rear side light	6	10A	70
Right rear side light	7	10A	70
Left dipped-beam headlamp/Xenon lamps (optional)	8	20A	70
Right dipped-beam headlamp/Xenon lamps (optional)	4	20A	70
Left main-beam headlamp	2	10A	70
Right main-beam headlamp	1	10A	70
Cruise Control (optional)	13	10A	70
Left number plate light	7	10A	70
Right number plate light	6	10A	70
Reversing lights/Sound system	13	10A	70
Left rear fog guard	7	10A	70
Right rear fog guard	6	10A	70
Direction indicators - Hazard warning lights	14	10A	70
Fog lamps	16	15A	72
Car interior and glovebox lights	12-13	10A	70
HI-FI BOSE system	9	25A	72

Downloaded from www.Manualslib.com manuals search engine

SERVICES	FUSE	AMPERAGE	FIGURE
Windscreen wiper, windscreen washer/Rearscreen wiper/Rain sensor (optional)	10	20A	70
Horns	11	20A	70
GSM Box for Connect/Navigator-electronic warning system	13	10A	70
Front power windows	5	30A	70
Left rear power window	4	20A	72
Right rear power window	5	20A	72
Door locking system - Boot light	3	20A	70
Boot electric opening	7	30A	72
Rearscreen heating	15	30A	70
Wing mirror adjustment	13	10A	70
Wing mirror defrosting	15	30A	70
Cigar lighter/Odour sensor	9	15A	70
Headlamp washer	1	20A	73
Headlamp aiming device	4	10A	70
Instrument cluster	12	10A	70
Main-beam headlamp warning light	2	10A	70
Rearscreen heating warning light	15	30	70

Downloaded from www.Manualslib.com manuals search engine

SERVICES	FUSE	AMPERAGE	FIGURE
Sound system/Diagnosis socket	12	10A	70
Electronic alarm system	12	10A	70
Supplementary electrical socket in the boot (Sportwagon versions)	10	20A	72
Remote control	13	10A	70
Controls lighting/Stop lights	3	10A	72
Rear control lighting from sidelights	6	10A	72
Seat heating/Sunroof/Seat electrical adjustment	8	30A	72
Air bag system	2 (*)	10A (*)	72
ABS system	9 11 (*)	60A 10A (*)	69 72
Alfa Romeo CODE system	13	7.5A	72
Climate control system	9	15A	70
Engine cooling radiator fan:			
First speed	6	40A	69
Second speed	7	40A	69
Passenger compartment fan	4	40A	69
Electronic ignition and injection system	13 14 15 5	7.5A 15A 15A 30A	72 72 72 69

Downloaded from www.Manualslib.com manuals search engine

SERVICES	FUSE	AMPERAGE	FIGURE
Services switched off with starting	1	7.5A	72
Battery power supply for Alfa Romeo CODE/Injection system	12	7.5A	72
All devices operating with the key at MAR are not working	2	30A	69
Almost all the electric systems and components are not working	1 3	80A 70A	69 69
Selespeed gearbox	7 8	30A 20A	69 69

(*) Specific components and values depending on the version/market. If in doubt, especially for the replacement of fuses which protect safety circuits and/or systems (Air bag, ABS, etc.), you are recommended to contact Alfa Romeo Authorized Services, also to locate the cause of the fuse tripping.

Downloaded from www.Manualslib.com manuals search engine

IN THE EVENT OF A FLAT BATTERY

First of all, you are advised to refer to the "Car maintenance" chapter for precautions to be adopted in order to prevent the battery from getting flat and to ensure its long durability.

CHARGING THE BATTERY

IMPORTANT The description of the battery charging procedure is described only for informative purposes. This operation should be carried out by Alfa Romeo Authorized Services.

Charging should be slow at a low amp rating for about 24 hours. Charging for a longer time may damage the battery.

Charge the battery as follows:

— Disconnect the terminal from the battery negative (**—**) pole.

— Connect the charger cables to the battery, respecting polarity.

— Turn on the charger.

— After charging turn off the charger before disconnecting it from the battery.

— Reconnect the terminal to the battery negative (**—**) pole.

WARNING

The fluid contained in the battery is poisonous and corrosive. Avoid contact with the skin or eyes. The battery should be charged in a well ventilated place and kept away from naked flames or sources of sparks: danger of explosion and fire.

WARNING

Never attempt to charge a frozen battery before thawing it, the danger of explosion exists. If it has frozen, always check that the inside elements are not broken (risk of short circuit) and that the body is not cracked, with the risk of acid coming out which is poisonous and corrosive.

STARTING WITH AN AUXILIARY BATTERY

See "Starting with an auxiliary battery" in this chapter.

Downloaded from www.Manualslib.com manuals search engine

IF THE VEHICLE IS TO BE TOWED

The tow ring supplied with the vehicle is housed in the tool box under the boot mat.

To install the tow ring, proceed as follows:

— Take the tow ring from the tool box.

— Remove the cover (**A**) snap-fitted on the front (**fig. 77**) or rear bumper (**fig. 78**). If the supplied flat screwdriver is used to carry out this operation, protect the tip with a soft cloth to prevent damaging the car.

— Firmly screw the ring in its housing.

WARNING

Carefully clean the threaded housing before tightening the ring. Before beginning to tow the car make sure that the tow ring is firmly tightened in its threaded housing.

A0B0331m

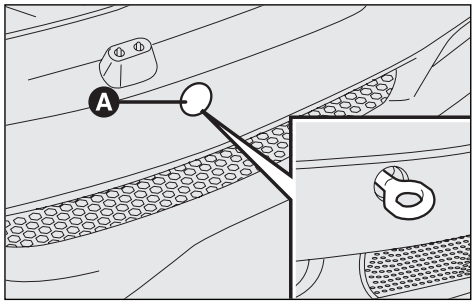

fig. 77

A0B0330m

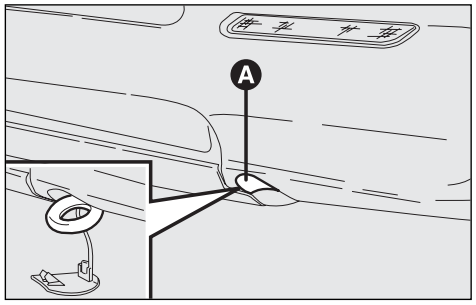

fig. 78

Downloaded from www.Manualslib.com manuals search engine

WARNING

Before beginning to tow the car, turn the ignition key to MAR and then to STOP, do not remove it. Removing the key automatically engages the steering lock resulting in the impossibility to steer the wheels. When towing remember that without the help of the servo-brake and power steering, it is necessary to exert more effort on the brake pedal and for steering. Do not use flexible cables for towing and avoid jerks. During towing operations make sure that fastening the joint to the car does not damage the components in contact with it. When towing the car it is compulsory to comply with the specific traffic regulations concerning both the towing device and behaviour on the road.

TOWING THE SELESPEED GEARBOX VERSIONS

IMPORTANT For version with Selespeed gearbox, make sure that it is in neutral (**N**) (checking that the car moves when pushed) and proceed as for towing a normal car with mechanical gearbox following the instructions given on the previous page.

If setting to neutral is not possible, do not tow the vehicle. Contact Alfa Romeo Authorized Services.

WARNING

Do not start the engine when towing the vehicle.

Downloaded from www.Manualslib.com manuals search engine

IF THE VEHICLE IS TO BE LIFTED

WARNING

The car is to be lifted positioning the jack or the workshop lift arm plate only in the points shown (fig. 79).

USING AN ARM LIFT OR WORKSHOP LIFT

The vehicle must only be lifted laterally positioning the ends of the arms or the workshop lift in the areas illustrated, approx. 40 cm from the profile of the wheelhouse (**fig. 79**).

A0B0394m

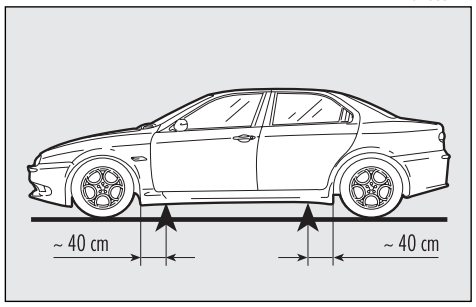

fig. 79

Downloaded from www.Manualslib.com manuals search engine

IF AN ACCIDENT OCCURS

— It is important to keep calm.

— If you are not directly involved in the accident, stop at least ten metres away from the accident.

— If you are on a motorway do not obstruct the emergency lane with your car.

— Turn off the engine and turn on the hazard lights.

— At night, illuminate the scene of the accident with your headlights.

— Act carefully, you must not risk being run over.

— Mark the accident by putting the red triangle at the regulatory distance from the car where it can be clearly seen.

— Call the emergency services making the information you give as accurate as you can. On the motorway use the special column-mounted emergency phones.

— In pile-ups on the motorway, particularly when the visibility is bad, there is a high risk of other vehicles running into those already immobile. Get out of the vehicle immediately and take refuge behind the guard rail.

— If the doors are blocked, do not try to get out of the vehicle by breaking the stratified windscreen. The rear and side windows are easier to break.

— Remove the ignition keys of the vehicles involved.

— If you smell petrol or other chemicals, do not smoke and make sure all cigarettes are extinguished.

— Use a fire extinguisher, blanket, sand or earth to put out fires, no matter how small they are. Never use water.

— If it is not necessary to use the lighting system, disconnect the terminal from the battery negative (—) pole.

Downloaded from www.Manualslib.com manuals search engine

IF ANYONE IS INJURED

— Never leave the injured person alone. The obligation to provide assistance exists even for those not directly involved in the accident.

— Do not congregate around the injured person.

— Reassure the injured person that help is on its way and will arrive soon. Stay close by to calm him/her down in case of panic.

— Unfasten or cut seat belts holding injured parties.

— Do not give an injured person anything to drink.

— Never move an injured person except in the following cases.

— Pull the injured person from the car only if it risks catching fire, it is sinking in water or is likely to fall over a cliff or similar. Do not pull his/her arms or legs, do not bend the head and, as far as possible, keep the body horizontal.

FIRST-AID KIT

It is advisable to have also a fire extinguisher and a blanket besides the first-aid kit.

Downloaded from www.Manualslib.com manuals search engine

CAR MAINTENANCE

PROGRAMMED MAINTENANCE

Correct maintenance is essential for ensuring long car life under the best conditions.

This is why Alfa Romeo has programmed a series of checks and maintenance operations every 20,000 km.

IMPORTANT At 2000 km from the maintenance deadline, the Infocenter display will show "SCHEDULED SERVICE WITHIN" which is shown again turning the ignition key to **MAR**, every 200 km. For further details, see "Service" in "Infocenter Display" paragraph in chapter "Getting to know your car".

It is however wise to remember that Programmed Maintenance does not completely cover all the car's requirements: also in the initial period before 20,000 km service coupon and later, between one coupon and another, ordinary care is still necessary such as for example routinely checking and topping up the level of fluids, checking the tyre pressure, etc...

IMPORTANT The Programmed Maintenance coupons are specified by the Manufacturer. The failure to have them carried out may invalidate the warranty.

The Programmed Maintenance service is carried out by all Alfa Romeo Authorized Services, at pre-established times.

If during each operation, in addition to the ones programmed, the need arises for further replacements or repairs, these may be carried out only with the explicit agreement of the customer.

IMPORTANT You are advised to contact Alfa Romeo Authorized Services in the event of any minor operating faults, without waiting for the next service coupon.

Downloaded from www.Manualslib.com manuals search engine

SCHEDULED MAINTENANCE PROGRAMME

Thousands of km	20	40	60	80	100	120	140	160	180
Check tyre conditions/wear and adjust pressure if necessary	●	●	●	●	●	●	●	●	●
Check operation of lighting system (headlights, direction indicators, hazard lights, boot lights, passenger compartment lights, glovebox light, warning lights, etc..)	●	●	●	●	●	●	●	●	●
Check operation of windscreen wiper/washer system, adjust spray jets	●	●	●	●	●	●	●	●	●
Check position/wear of windscreen/rearscreen wiper blades	●	●	●	●	●	●	●	●	●
Check front disk brake pad wear indicator	●	●	●	●	●	●	●	●	●
Check conditions of rear disk brake pads		●		●		●		●	
Sight check for the conditions of: exterior bodywork, underbody protection, pipes and hoses (exhaust - fuel - brakes), rubber parts (boots, sleeves, bushes, etc.)	●	●	●	●	●	●	●	●	●
Check for bonnet and boot lock cleanness, lever cleanness and lubrication	●	●	●	●	●	●	●	●	●
Check condition of timing drive belt			●						●
Sight check for conditions of Poly-V accessory drive belt			●						●
Check/adjust handbrake lever stroke		●		●		●		●	
Check exhaust emissions		●		●		●		●	
Check operation of antievaporation system				●				●	

Downloaded from www.Manualslib.com manuals search engine

Thousands of km	20	40	60	80	100	120	140	160	180
Air cleaner cartridge replacement		●		●		●		●	
Check and if necessary top up fluid levels (brakes, hydraulic clutch, power steering, windscreen wiper, battery, engine coolant, etc..)	●	●	●	●	●	●	●	●	●
Check and if necessary top up Selespeed oil level	●	●	●	●	●	●	●	●	●
Replacement of timing drive belt (*) and Poly-V accessory drive belt						●			
Replacement of spark plugs					●				
Check operation of engine control systems (through diagnosis)		●		●		●		●	
Check gearbox and differential oil level				●				●	
Change engine oil and oil filter	●	●	●	●	●	●	●	●	●
Change brake fluid (or every 2 year)			●			●			●
Replacement of dust/pollen filter	●	●	●	●	●	●	●	●	●

(*) Or every 3 years in harsh conditions (cold climates, stop and go city traffic, dusty areas)
Or every 5 years, regardless of the mileage.

Downloaded from www.Manualslib.com manuals search engine

ANNUAL INSPECTION PLAN

An annual inspection plan has been established for cars thet cover less than 20,000 km (e.g. 10,000 km). It consists of the following:

— Check tyre conditions/wear and adjust pressure if required.

— Check lighting system operation (headlights, direction indicators, hazard lights, boot lights, passenger compartment lights, glovebox light, warning lights of instrument panel, etc.)

— Check windscreen and rear-screen wiper/washer operation, adjust nozzles

— Check windscreen/rear-screen blade position/wear

— Check condition and wear of the front brake pad

— Check for bonnet and boot lock cleanness, lever cleanness and lubrication

— Visually check the following: engine, gearbox, transmission, piping (exhaust - fuel - brakes) rubber components (casings - sleeves - bushings, etc..), brake and fuel hoses

— Check battery charge condition

— Visually check the condition of the belts and various controls

— Check and top up if necessary, the fluid levels (coolant, brake fluid, windscreen washer fluid, battery, etc.)

— Change engine oil

— Replace engine oil filter

— Change combined pollen filter.

ADDITIONAL OPERATIONS

Every **1000 km** or before long journeys check and if necessary top up:

— engine coolant level

— brake fluid/hydraulic clutch control fluid level

— power steering fluid level

— windscreen washer and headlamp washer fluid level

— tyre pressure and conditions.

Every **3000 km** check the level of the engine oil and top up if necessary.

You are recommended to use products of the **FL Selenia**, designed and developed expressly for Alfa Romeo cars (see "Refilling" table in "Technical specifications" chapter).

Downloaded from www.Manualslib.com manuals search engine

IMPORTANT
Engine oil

Should prevailing use of the car be under one of the following specially heavy conditions:

— dusty roads

— short distances (less than 7-8 km) repeated and with external temperatures below zero

— frequently idling engines or long distance low speed driving or in case of a long term inactivity

replace engine oil more frequently than required on Service Schedule.

IMPORTANT
Air cleaner

Using the car on dusty roads, change the air cleaner more frequently than stated in the Scheduled Maintenance Programme. For any doubts about the intervals between engine oil and air cleaner changes in relation to how the car is used, contact Alfa Romeo Authorized Services.

IMPORTANT
Battery

You are recommended to have the battery charge conditions checked, preferably at the onset of winter, to avoid the possibility of freezing the electrolyte.

This check should be carried out more frequently if the car is used prevailingly for short journeys, or if it is fitted with services that absorb high amounts of current permanently with the ignition key off, especially if installed in the after market.

In the case of use of the car in hot climates or particularly harsh conditions, it is wise to check the level of the battery fluid (electrolyte) at more frequent intervals than stated in the Scheduled Maintenance Programme.

IMPORTANT
Pollen filter

If the car is used frequently in dusty or heavily polluted environments it is advisable to replace the filtering element more frequently; in particular it should be replaced if a reduction of the amount of air admitted to the passenger compartment is noted.

Car maintenance should be entrusted to Alfa Romeo Authorized Services. For routine and minor maintenance operations you wish to carry out yourself, always make sure you have the proper equipment, genuine Alfa Romeo spare parts and the necessary fluids; do not however carry out these operations if you have no experience.

Downloaded from www.Manualslib.com manuals search engine

CHECKING FLUID LEVELS

WARNING

Never smoke while working in the engine compartment; gas and inflammable vapours may be present, with the risk of fire.

When topping up take care not to confuse the various types of fluids: they are all incompatible with one another and could seriously damage the car.

A0B0292m

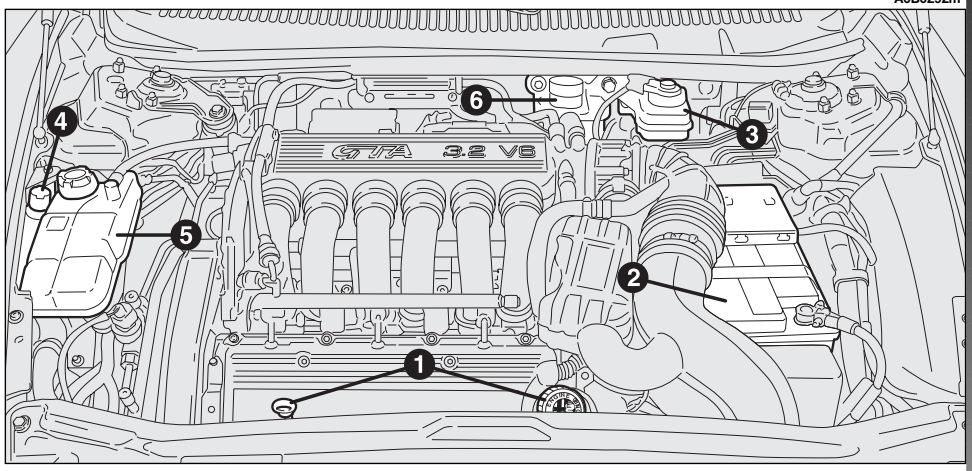

fig. 1

1 Engine oil - **2** Battery - **3** Brake fluid - **4** Windscreen washer fluid - **5** Engine coolant fluid - **6** Power steering fluid

Downloaded from www.Manualslib.com manuals search engine

ENGINE OIL (fig. 2)

The engine oil level should be checked when the car is standing on a level surface a few minutes (about 5) after the engine has been switched off.

Remove the dipstick (**A**), clean it, put it back completely, remove it once again and check that the level is between the **MIN** and **MAX** marks on the dipstick.

The interval between the **MIN** and **MAX** marks corresponds to approximately 1 liter of oil.

WARNING

When the engine is hot, take care when working inside the engine compartment to avoid burns. Remember that when the engine is hot, the fan may cut in: danger of injury.

WARNING

Scarves, ties and other loose clothing might be pulled by moving parts.

Never add oil with characteristics (classification, viscosity) which are different from those of the oil already in the circuit.

If the oil level is near or even below the **MIN**, mark, add oil trough the filler neck (**B**), until reaching the **MAX** mark.

IMPORTANT If a routine check reveals that the oil level is above the **MAX** mark, contact Alfa Romeo Authorized Services to have the correct level restored.

IMPORTANT After adding or changing the oil, run the engine for a few seconds and wait a few minutes after stopping it.

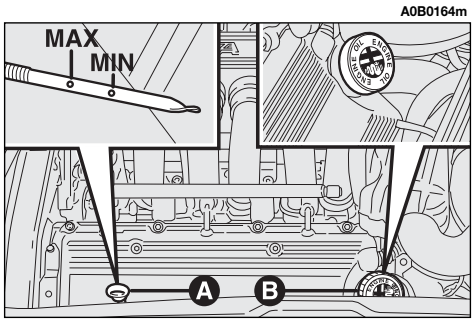

fig. 2

Engine oil consumption

Max. engine oil consumption is usually 400 grams every 1000 km.

During the initial period of use the engine settles, therefore the engine oil consumption can only be considered stabilised after the first 5000 ÷ 6000 km.

IMPORTANT Engine oil consumption depends on the way of driving and the conditions of use of the car.

Used engine oil and filter contain pollutants. Contact Alfa Romeo Authorized Services to have the oil and filter changed as these are equipped to dispose of the waste oil and filters respecting the environment and laws.

Downloaded from www.Manualslib.com manuals search engine

SELESPEED GEARBOX HYDRAULIC SYSTEM OIL (fig. 3)

The oil level of the Selespeed system should be carried out with the car on a level surface and with the engine stopped and cold.

To check the level, proceed as follows:

— turn the ignition key to **MAR**;

— disconnect the breather tube and remove the cap (**A**) checking that the level corresponds with the **MAX** mark on the dipstick of the actual cap;

— if the level is below the **MAX** mark, top up with oil until reaching the correct level;

— after screwing the cap back on, insert the breather tube completely on the cap spout and turn the ignition key to **STOP**.

Do not add oil with different characteristics than those of the oil already in the system.

Used gearbox oil contain pollutants. Contact Alfa Romeo Authorized Services to have the oil changed as these are equipped to dispose of the waste oil respecting the environment and laws.

WARNING

When the engine is hot, take care when working inside the engine compartment to avoid burns. Remember that when the engine is hot, the fan may cut in: danger of injury.

A0B0162m

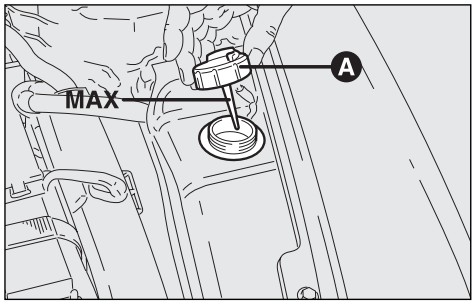

fig. 3

Downloaded from www.Manualslib.com manuals search engine

ENGINE COOLANT LEVEL (fig. 4)

WARNING

Do not remove he cap when the engine is hot: danger of burns.

The level of the coolant in the header tank (reservoir) should be checked with the engine cold and the car on a level surface and it should be between the **MIN** and **MAX** marks on the tank. If the level is low, loosen the header tank cap (**A**) and slowly pour a mixture of the fluid specified in the "Fluids and lubricants " table in section "Technical Specifications", through the filler neck until nearing the **MAX** mark; have this operation carried out at Alfa Romeo Authorised Services.

A0B0161m

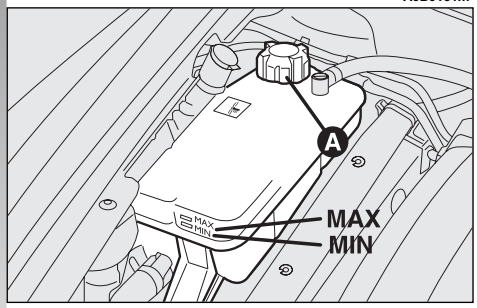

fig. 4

The antifreeze mixture contained in the cooling circuit guarantees protection down to –35°C.

The cooling system is pressurised. If necessary, replace the cap only with another original one, otherwise the efficiency of the system could be compromised.

Top up only with the same fluid contained in the cooling circuit. PARAFLU UP (red) cannot be mixed with PARAFLU 11 (blue) or with other fluids. Should this take place, do not start the engine and contact Alfa Romeo Authorized Service.

POWER STEERING OIL LEVEL (fig. 5)

Check that the oil level in the reservoir is at the MAX level.

This operation must be carried out with the car on level ground and when the engine is stationary and cold.

Check that the level reaches the **MAX** reference notch on the reservoir or coincides with the upper notch (maximum level) on the dipstick integral with the reservoir cap.

If the level of the oil in the reservoir falls below the specified level, top up only with one of the products listed in the table "Fluids and lubricants" in "Technical specifications" chapter as follows:

A0B0158m

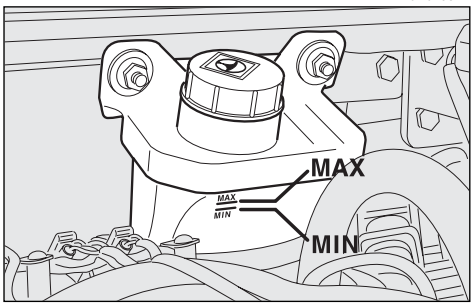

fig. 5

Downloaded from www.Manualslib.com manuals search engine

— Start the engine and allow the oil in the reservoir to settle.

— When the engine is running turn the steering wheel lock to lock a few minutes.

— Top up to the **MAX** level notch and then replace the cover.

WARNING

Power steering fluid is highly inflammable. Do not let it come into contact with hot engine parts.

IMPORTANT Contact Alfa Romeo Authorized Services for maintenance and repair operations.

Oil consumption is very low, if topping up again is needed shortly afterwards, have the system checked for possible leaks by Alfa Romeo Authorized Services.

BRAKE AND HYDRAULIC CLUTCH FLUID (fig. 6)

From time to time check the instrument panel warning light (Ⓘ) by pressing cover (**B**) of the reservoir (**A**) (with the ignition key at **MAR**) instrument panel warning light should come on.

When loosening the reservoir cap do not allow the fluid to come into contact with painted parts. If it does, wash it off immediately with water.

A0B0157m

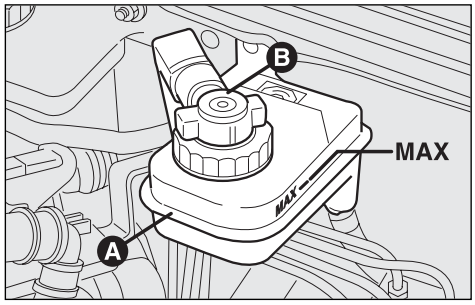

fig. 6

WARNING

Brake and clutch fluid is poisonous and highly corrosive. In the event of accidental contact, wash the parts involved immediately with neutral soap and water, then rinse thoroughly. See a doctor at once if the fluid is swallowed.

WARNING

Symbol ◎ on the container indicates synthetic type brake fluid distinguishing it from the mineral kind. Using mineral type fluids damages the sp ecial rubber braking system gaskets beyond s

Downloaded from www.Manualslib.com manuals search engine

IMPORTANT Brake and hydraulic clutch fluid is hygroscopic (i.e. it absorbs moisture). For this reason, if the car is mainly used in areas with a high degree of atmospheric humidity, the fluid should be replaced at more frequent intervals than specified in the Scheduled Maintenance Programme.

WINDSCREEN/HEADLIGHT WASHER FLUID (fig. 7)

Check the level in the reservoir removing the cap (**A**).

If necessary top up using a mixture of water and **TUTELA PROFESSIONAL SC 35** as follows:

– 30% of **TUTELA PROFESSIONAL SC 35** and 70% water in summer;

– 50% of **TUTELA PROFESSIONAL SC 35** and 50% water in winter;

– in the case of temperatures below -20°C use **TUTELA PROFESSIONAL SC 35** fluid neat.

A0A0156m

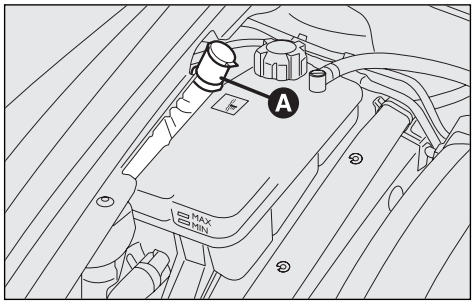

fig. 7

WARNING

Do not travel with the windscreen washer reservoir empty: the action of the windscreen washer is fundamental for improving vision.

WARNING

Some commercial additives for windscreen washers are inflammable. The engine compartment contains hot components which could set it on fire.

To avoid damaging the pump motors, do not use the windscreen washers when the reservoir is empty.

Downloaded from www.Manualslib.com manuals search engine

AIR FILTER

The air cleaner is connected to the temperature and air flow sensors which send the electrical signals needed for correct operation of the injection and ignition system to the control unit.

It must therefore always be in perfect conditions to ensure correct operation of the engine, low consumption and exhaust emission levels.

The description for changing the cleaner is described for informative purposes only. This operation should be carried out by Alfa Romeo Authorized Services.

If they are not carried out correctly and with the due precautions, the operations involving cleaner replacement described herein may compromise the safety of the car.

To change the cleaner, proceed as follows:

— remove the cover (**A-fig. 8**);

— slacken the two screws shown by the arrows and move the bracket (**B-fig. 9**) to one side complete with relay;

— remove the sleeve as follows:

— slacken the clamps (**A-fig. 10**), disconnect the air flow meter electrical connection (**C**) and remove the sleeve (**B**).

A0B0154m

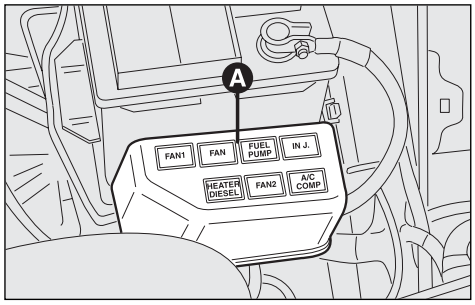

fig. 8

A0B0431m

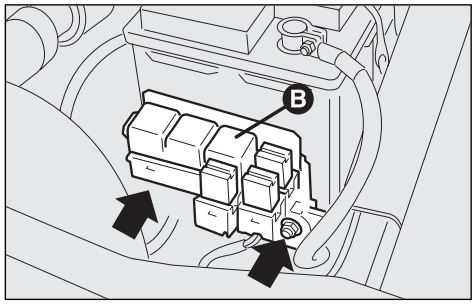

fig. 9

A0B0151m

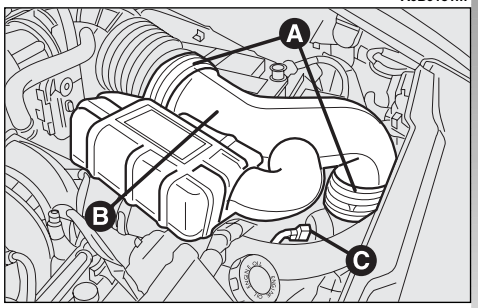

fig. 10

Downloaded from www.Manualslib.com manuals search engine

When the car is habitually driven in dusty areas, the cleaner should be changed at shorter intervals than those given in the Programmed Maintenance Schedule.

Any attempt to clean the air cleaner may cause serious engine damage.

POLLEN FILTER

This has mechanical/electrostatic air filtering actions, provided that the windows and doors are shut.

Have the pollen filter checked once a year by Alfa Romeo Authorized Services, preferably at the onset of summer.

If the car is mainly used in dusty or heavily polluted areas, the filter should be changed at more frequent intervals than specified in the Scheduled Maintenance Programme.

IMPORTANT The failure to replace the filter can considerably reduce the effectiveness of the climate control system.

BATTERY

The battery is of the "Limited Maintenance" type and is fitted with an optical indicator (**A-fig. 11**) for checking the electrolyte level and charge.

Under normal conditions of use the electrolyte does not need topping up with distilled water. To make sure that it is in efficient conditions, at routine intervals check the indicator on the battery cover which should be dark in colour with a green central area.

If the indicator is a bright light colour, or dark without the green central area, contact Alfa Romeo Authorized Services.

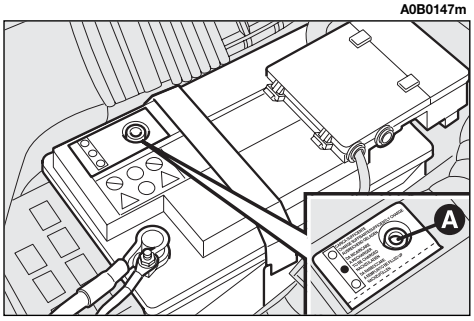

fig. 11

Downloaded from www.Manualslib.com manuals search engine

Batteries contain substances that are very harmful for the environment. You are advised to have the battery changed at Alfa Romeo Authorized Services, which are properly equipped for disposing of used batteries respecting nature and the law.

WARNING

The liquid in the battery is poisonous and corrosive. Avoid contact with eyes and skin. Do not bring naked flames or possible sources of sparks near to the battery: risk of fire and explosion.

Incorrect fitting of electrical accessories can seriously damage the car. If after buying the car, you wish to install electric accessories (alarm, sound system, radiotelephone, etc.) contact Alfa Romeo Authorized Services who will be able to suggest the most suitable devices and above all advise about the need to use a more powerful battery.

If the car is to remain stationary for a long time in very cold weather, remove the battery and take it to a warm place, otherwise it might freeze.

WARNING

When doing any work on the battery or near it, always wear special protective goggles.

WARNING

Working with a low fluid level may damage the battery irreversibly, even causing it to burst.

Downloaded from www.Manualslib.com manuals search engine

CHECKING THE CHARGE

The battery charge may be checked satisfactorily using the indicator, and acting according to the colour the indicator shows.

Refer to the table below or to the label (**fig. 12**) on the battery.

CHARGING THE BATTERY

IMPORTANT The description of the battery charging procedure is described only for informative purposes. This operation should be carried out by Alfa Romeo Authorized Services.

Charging should be slow at a low amp rating for about 24 hours. Charging for a longer time may damage the battery.

Charge the battery as follows:

— Disconnect the terminal from the battery negative (**—**) pole.

IMPORTANT When reconnecting the negative battery cable after having disconnected it, wait for 2 minutes before turning the key to enable the climate control system to reset actuator strokes properly.

— Connect the charger cables to the battery terminals ensuring that the bias is correct.

— Turn on the charger.

— After charging turn off the charger before disconnecting it from the battery.

— Reconnect the battery negative terminal (**—**).

IMPORTANT Turn off the alarm with the remote control and deactivate the system turning the emergency key to "**OFF**" (see "Electronic alarm" in the chapter "Getting to know your car").

A0B0146m

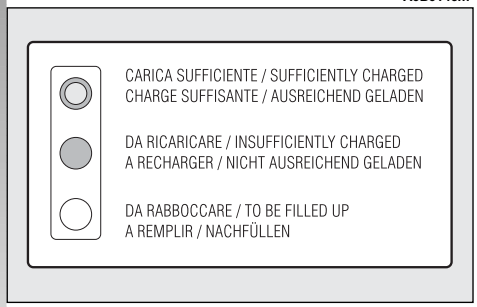

fig. 12

Bright white colour	Top up electrolyte	Contact Alfa Romeo Authorized Services
Dark colour without green central area	Low battery charge	Charge the battery (advisable to contact Alfa Romeo Authorized Services)
Dark colour with green central area	Electrolyte level and charge sufficient	No action needed

Downloaded from www.Manualslib.com manuals search engine

WARNING

Never attempt to charge a frozen battery before thawing it, the danger of explosion exists. If it has frozen, always check that the inside elements are not broken and that the body is not cracked, with the risk of acid coming out which is poisonous and corrosive.

IMPORTANT A battery kept at below 50% of its capacity is damaged by sulphation, the capacity is reduced and starting is difficult, there is also more possibility of freezing (this can occur at –10 °C). In the event of a prolonged stop, refer to "Vehicle inactivity" in the chapter "Correct use of the car".

REPLACING THE BATTERY

If required, replace the battery with a genuine spare part having the same specifications. If a battery with different specifications is fitted, the service intervals given in the Scheduled Maintenance Programme in this section will no longer be valid. Refer to the instructions provided by the battery manufacturer.

USEFUL HINTS TO EXTEND THE LIE OF YOUR BATTERY

To avoid quickly draining the battery and to preserve its operating conditions over the course of time, carefully follow the instructions below:

– The terminals must always be tightened.

– As far as possible, avoid keeping services on for a long time with the engine stopped (radio, hazard lights, parking lights, etc.).

– When leaving the car parked in a garage, make sure that the doors, bonnet, boot and interior lids are properly shut to prevent internal lights from staying on.

– Before doing any work on the electric system, disconnect the battery negative terminal.

– If after purchasing the car, you wish to install electrical accessories which need a permanent electrical supply (alarm, hands-free phone, radio-navigator etc.) contact Alfa Romeo Authorized Services whose qualified personnel, in addition to suggesting the most suitable devices from Lineaccessori Alfa Romeo will be able to evaluate the total electrical absorption, checking whether the car's electric system is able to support the load required or whether a battery with higher capacity is necessary. In fact, these devices continue to absorb current with the ignition key off (car parked, engine off) and may gradually drain the battery.

Downloaded from www.Manualslib.com manuals search engine

The total absorption of these accessories (standard and installed later) must be less than 0.6 mA x Ah (of the battery), as shown in the table below:

Battery	Maximum permissible loadless absorption
60 Ah	36 mA
70 Ah	42 mA

You are also reminded that services with high current absorption activated by the user, such as bottle warmers, vacuum cleaners, cellular telephone, mini refrigerator, etc. accelerate the battery drainage process if they are powered with **the engine not running** or running at idle speed.

IMPORTANT It should also be noted that improper branches on connectors of the electric wiring for installing additional equipment is dangerous, particularly if safety devices are involved.

ELECTRONIC CONTROL UNITS

With normal use of the car, no particular precautions need to be taken.

In the event of work on the electric system or emergency starting, the instructions given below must absolutely be adhered to:

— Always switch off the engine before disconnecting the battery from the electric system.

— If it is necessary to charge the battery, always disconnect it from the electric system.

— When starting in an emergency, only use an auxiliary battery and not a battery charger.

— Check that the bias is correct and that the connections between the battery and the electric system are in efficient conditions.

— Do not connect or disconnect the terminals of the electronic units while the ignition key is at **MAR**.

— Do not check for current in the cables by short-circuiting the ends.

— If electrical welding is to be carried out on the body of the car, the electronic control units must be disconnected or removed if the work involves the production of high temperatures.

WARNING

Alterations or repairs to the electric system carried out incorrectly and without taking into account the specifications of the system, may cause operating faults with the risk of fire.

Downloaded from www.Manualslib.com manuals search engine

WHEELS AND TYRES

Check the pressure of each tyre, every two weeks and before a long journey.

The pressure should be checked with the tyre rested and cold.

It is normal for the pressure to increase when the car is in use. If you have to check or restore the pressure when the tyres are hot, bear in mind that the pressure should be +0.3 bar compare with the specified rating.

For the correct tyre inflation pressure, see "Wheels" in "Technical specifications" chapter.

WARNING

Remember that car road holding also depends on correct tyre inflation pressure.

Incorrect pressure causes abnormal tyre wear **fig. 13**:

A - Normal pressure: tread evenly worn.

B - Low pressure: tread particularly worn at the edges.

C - High pressure: tread particularly worn in the centre.

WARNING

Excessively low pressure causes overheating of the tyre with the possibility of serious damage to it.

Tyres should be changed when the tread thickness is reduced to 1.6 mm. In any case follow local regulations.

A0B0235m

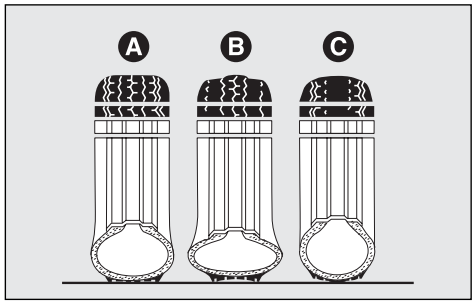

fig. 13

WARNINGS

Where possible, avoid sudden braking, tyre squealing starts, etc.

Particularly avoid violent bumps against kerbs, potholes or obstacles of various kinds. Prolonged driving on rough roads may damage the tyres.

Routinely check the tyres for cuts on the sides, swellings or uneven tread wear. If necessary contact Alfa Romeo Authorized Services.

Avoid overloading the vehicle when travelling: this may cause serious damage to the wheels and tyres.

Downloaded from www.Manualslib.com manuals search engine

If a tyre is punctured, stop immediately and change it to avoid damage to the tyre, the rim, suspensions and steering system. Tyres age even if they are not used much. Cracks in the tread rubber are a sign of aging. In any case, if the tyres have been on the car for over 6 years, they should be checked by specialised personnel, to see if they can still be used.

In the case of replacement, always fit new tyres, avoiding those of dubious origin.

Alfa 156 GTA uses Tubeless tyres. Never use an inner tube with these tyres.

If a tyre is changed, also change the inflation valve

To allow even wear between the front and rear tyres, it is advisable to change them over every 10-15 thousand kilometres, keeping them on the same side of the car so as to not reverse the direction of rotation.

WARNING

Do not cross switch the tyres, moving them from the right of the car to the left and vice versa.

WARNING

Alloy rim painting involving temperatures exceeding 150°C should be avoided since wheel mechanical characteristics could be impaired.

A0B0236m

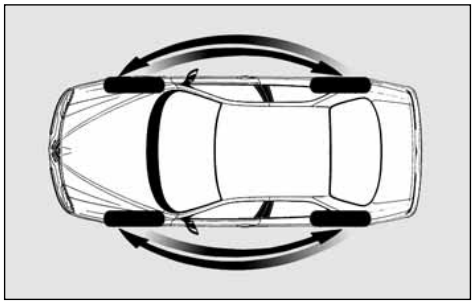

fig. 14

RUBBER HOSES

As far as the brake system and fuel supply rubber hoses are concerned, carefully follow the Scheduled Maintenance Programme of this chapter. Indeed ozone, high temperatures and prolonged lack of fluid in the system may cause hardening and cracking of the hoses, with possible leaks. Careful control is therefore necessary.

Downloaded from www.Manualslib.com manuals search engine

WINDSCREEN WIPER

BLADES

Periodically clean the rubber part using special products **TUTELA PROFESSIONAL SC 35** is recommended.

If the rubber blades are bent or worn they should be replaced. In any case they should be changed once a year.

A few simple notions can reduce the possibility of damage to the blades:

— If the temperature falls below zero, make sure that ice has not frozen the rubber against the glass. If necessary, thaw using an antifreeze product.

— Remove any snow from the glass: in addition to protecting the blades, this prevents effort on the motor and overheating.

— Do not operate the windscreen and rear window wipers on dry glass.

WARNING

Driving with worn wiper blades is a serious hazard, because visibility is reduced in bad weather.

Changing the windscreen wiper blade (fig. 15)

IMPORTANT The blade on driver's side is fitted with a spoiler that improves adhesion between the blade and the windscreen. To prevent improper fitting, before changing the blade, check the spoiler direction of the blade to be replaced, then fit the new blade following the same spoiler direction.

A0B0432m

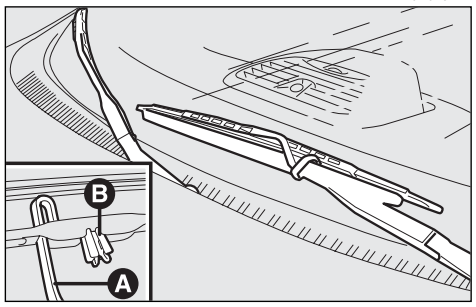

fig. 15

Proceed as follows:

— Raise the windscreen wiper arm (**A**) and position the blade so that it forms an angle of 90° with the arm.

— Press tab (**B**) of the coupling spring and remove the blade to be replaced from the arm (**A**).

— When the spring is released from the curved top of the arm, move the blade to allow the arm to be withdrawn through the slot.

— Insert a new blade passing it through the curved top of the arm (**A**) through the slot.

— Lift the blade to clamp tab (**B**) of the coupling spring with the curved top of the arm.

— Lower the windscreen wiper arm.

IMPORTANT The blades may differ according to the versions. In any case, follow the instructions provided in the packs available as spares from Alfa Romeo Authorized Services.

Downloaded from www.Manualslib.com manuals search engine

SPRAY JETS

Make sure that the windscreen and headlight (where applicable) washer jets deliver a jet of fluid which is adequate and correctly directed.

If the spray devices are not working check that the supply circuit is not blocked. If necessary unblock the nozzles using a needle.

HEADLIGHT WASHERS

Regularly check that the spray jets are intact and clean (**fig. 16**).

If it is necessary to direct the jet, contact an Alfa Romeo Authorized Service.

A0B0379m

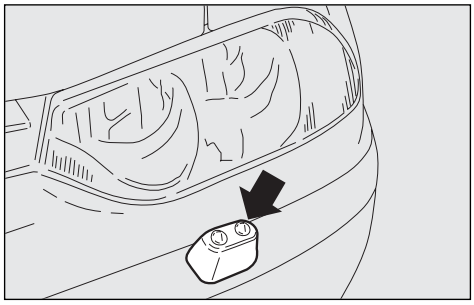

fig. 16

BODYWORK

PROTECTION FROM ATMOSPHERIC AGENTS

The main causes of corrosion are:

— atmospheric pollution

— salty air and humidity (coastal areas, or hot humid climates)

— seasonal environment conditions.

Not to be underestimated is also the abrasive action of wind-borne atmospheric dust and sand and mud and gravel raised by other vehicles.

On your **Alfa 156 GTA** Alfa Romeo has implemented the best manufacturing technologies to effectively protect the bodywork against corrosion.

Downloaded from www.Manualslib.com manuals search engine

These include:

— Painting products and systems which give the car particular resistance to corrosion and abrasion.

— Use of galvanised (or pretreated) steel sheets, with high resistance to corrosion.

— Spraying the underbody, engine compartment, wheel arches and other parts with highly protective wax products.

— Spraying of plastic parts, with a protective function, in the more exposed points: underdoor, inner wheel arch linings, edges, etc.

— Use of "open" boxed sections to prevent condensation and pockets of moisture from triggering rust inside.

VEHICLE EXTERIOR AND UNDERBODY WARRANTY

The **Alfa 156 GTA** is guaranteed against perforation due to rust of any original element of the structure or body. For the general terms of this warranty, refer to the Warranty Booklet.

RECOMMENDATIONS TO PRESERVE THE BODYWORK

Paint

The paintwork does not only serve an aesthetic purpose but also protects the underlying sheet metal.

In the case of deep scrapes or scores, you are advised to have the necessary touching up carried out immediately to avoid the formation of rust.

Only original products should be used for touching up paint (see "Bodywork paint identification label" in the "Technical specifications" chapter).

Normal paint maintenance consists in washing at intervals depending on the conditions and environment of use. For example, in highly polluted areas, or if the roads are sprayed with salt, it is wise to wash the car more frequently.

Detersives pollute water. The car should therefore be washed in areas equipped for the collection and purification of the liquid used in the washing process.

To correctly wash the car:

1) Remove the aerial from the roof to prevent damage to it if the car is washed in an automatic system.

2) Spray the body with a low pressure jet of water.

3) Pass a sponge moistened with a light detergent solution, rinsing the sponge frequently.

4) Rinse well with water and dry with a jet of air or a chamois leather.

When drying, take particular care with the less visible parts like door surrounds, bonnet and around the headlights where water may stagnate. The car should not be taken to a closed area immediately, but left in the open so that residual water can evaporate.

Downloaded from www.Manualslib.com manuals search engine

Do not wash the car after it has been left in the sun or with the bonnet hot: this may alter the shine of the paintwork.

Exterior plastic parts must be cleaned in the same way as the rest of the vehicle.

Where possible, do not park under trees; the resinous substance many species release give the paint a dull appearance and increase the possibility of triggering rust processes.

IMPORTANT Bird droppings must be washed off immediately and thoroughly as the acid they contain is particularly aggressive.

Windows

Use specific products to clean the windows. Use clean cloths to avoid scratching or altering the transparency of the glass.

IMPORTANT The inside of the rearscreen should be wiped gently with a cloth in the direction of the filaments to avoid damaging the heating device.

Engine compartment

At the end of the winter the engine compartment should be carefully washed, without directing the jet against electronic control units. Contact a specialised workshop to have this done.

Detergents cause water pollution. Therefore the engine compartment should be washed in areas equipped for collecting and purifying the liquid used in the washing process.

IMPORTANT The vehicle should washed with the engine cold and the ignition key at **STOP**. After washing make sure that the various protections (e.g. rubber caps and various covers) have not been damaged or removed.

Downloaded from www.Manualslib.com manuals search engine

INTERIOR FITTINGS

Periodically check that water is not trapped under the mats (due to water dripping off shoes, umbrellas, etc.) which could cause oxidisation of the sheet metal.

WARNING

Never use inflammable products like fuel oil ether or rectified petrol for cleaning inside the car. The electrostatic discharges generated when rubbing to clean may cause fire.

CLEANING LEATHER SEATS

— Remove dried on dirt with a lightly moistened chamois leather or cloth without pressing too hard.

— Remove liquid or grease stains with a dry absorbent cloth without rubbing. Then wipe with a soft cloth or chamois leather with water and neutral soap. If the stain persists, use specific products, carefully following the instructions for use

IMPORTANT Never use spirit or alcohol-based products.

INTERIOR PLASTIC PARTS

Use appropriate products designed to preserve the appearance of components.

IMPORTANT Never use spirit or petroleum to clean the glass of the instrument panel.

WARNING

Do not keep aerosol cans in the car. There is the risk they might explode. Aerosol cans must never be exposed to a temperature above 50°C. The temperature inside the car might go well beyond that figure when exposed to the sun's rays.

Downloaded from www.Manualslib.com manuals search engine

ALFA 156 GTA SPORTWAGON

In this chapter you will find all the specific information for **Alfa 156 GTA Sportwagon** that integrate and complete the previous chapters.

DOORS

REAR DOORS

Opening/closing from outside

— To open the door, only with the inside knob lifted (**A-fig. 1**), pull the opening handle (**B-fig. 2**).

— To close, press the knob (**A-fig. 1**) also with the door open, then shut the door.

Opening/closing from inside

WARNING

Rear doors can only be opened if the "child safety" device is off.

— To open the door pull the handle (**A-fig. 3**).

— To close, press the knob (**B-fig. 3**), also with the door open, then shut the door.

A0B0077m

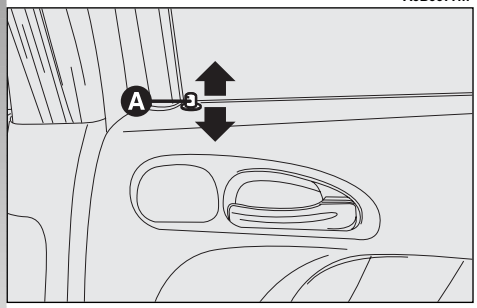

fig. 1

A0B0078m

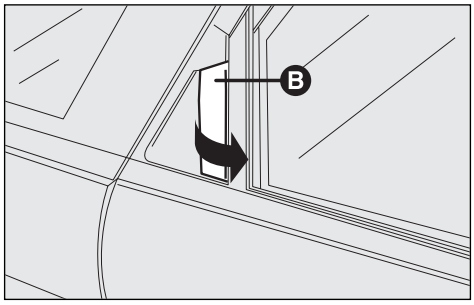

fig. 2

A0B0079m

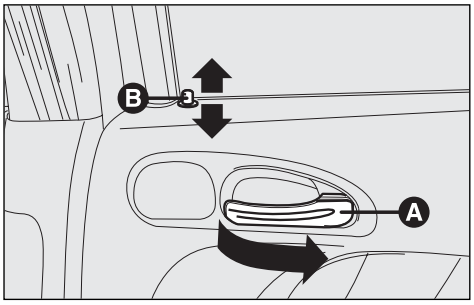

fig. 3

Downloaded from www.Manualslib.com manuals search engine

CHILD SAFETY LOCK (fig. 4)

The rear doors are fitted with a locking device (**A**) which prevents them from being opened from inside.

WARNING Each device only acts on the door on which it is installed.

The device can only be engaged with the doors open raising or lowering the control with the ignition key.

Position **1** (control up) = Device engaged.

Position **2** (control down) = Device released.

WARNING Also follow the instructions given in the chapter "Getting to know your car" under the paragraph "Child safety lock".

SEATS

REAR SEAT

Headrest

The car is fitted with two headrests for the side seats (**fig. 5**). On request for versions/markets where applicable, the car may also be fitted with a third headrest for the central seat (**fig. 6**).

To pull out the third headrest, push it upwards until hearing the stopping click.

A0B0080m

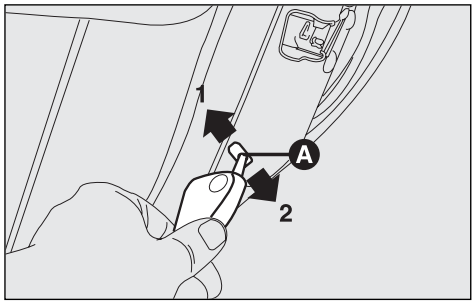

fig. 4

A0B0094m

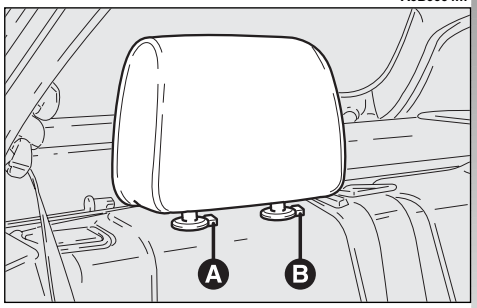

fig. 5

Downloaded from www.Manualslib.com manuals search engine

The third headrest (centre) is not removable, whereas the side headrests may be removed as follows:

— Raise the headrests about 2 cm.

— Press the buttons (**A** and **B-fig. 5**) at the same time and remove the headrests.

— To refit the headrests keep the buttons pressed (**A** and **B-fig. 5**) and insert them completely.

WARNING

Remember that the third headrest (central) should be pulled out completely so that the nape and not the neck rests on it. Only in this position does it exert its protective action if the car is hit from behind.

Centre armrest

To use the centre armrest, lower it as illustrated (**fig. 7**), using the handle (**A**).

A0B0095m

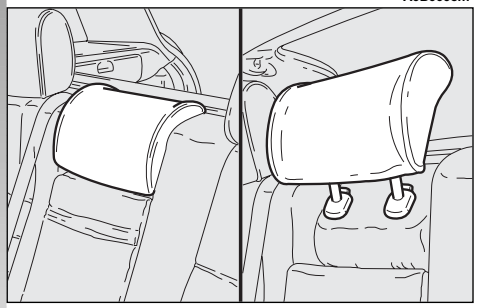

fig. 6

A0B0096m

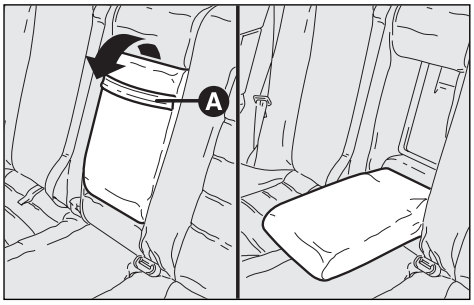

fig. 7

Downloaded from www.Manualslib.com manuals search engine

Ski compartment

This compartment can be used for carrying long loads.

To gain access to the compartment lower the armrest, pull the handle (**A-fig. 8**) and lower the lid on the armrest (**fig. 9**).

On versions fitted with the third headrest, before lowering the lid on the armrest, lift the headrest completely and set the fabric protection.

On request for versions/markets where applicable, the compartment can be fitted with a bag for carrying skis.

WARNING Lay the bag in the passenger compartment before putting the skis in. After carrying skis, let the bag dry (if wet), then fold it correctly and insert it in the compartment.

REARSCREEN WIPER - REARSCREEN WASHER

OPERATION (fig. 10)

This is only possible with the ignition key at **MAR**.

To operate the rearscreen wiper turn the knob (**A**) to position . The rearscreen wiper works intermittently.

Pushing the lever (**B**) forwards the rearscreen washer jet comes into operation which is disengaged when the lever is released.

With the rearscreen washer, the wiper comes into operation automatically for a few seconds.

A0B0097m

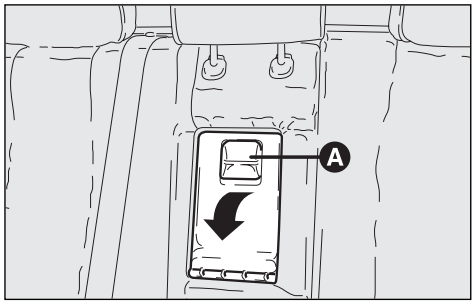

fig. 8

A0B0098m

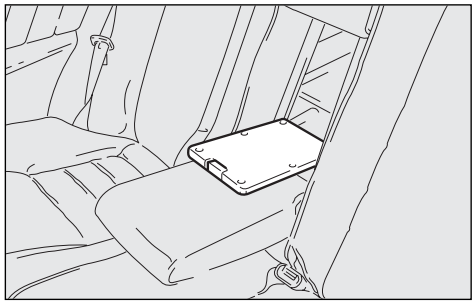

fig. 9

A0B0081m

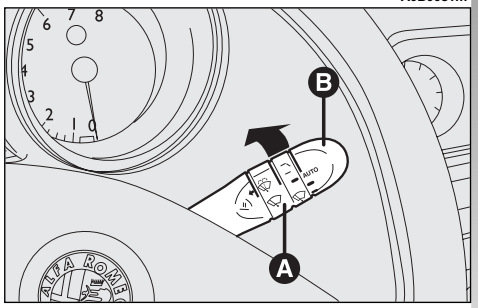

fig. 10

Downloaded from www.Manualslib.com manuals search engine

CHANGING THE BLADE (fig. 11)

The rearscreen wiper blade should be replaced together with the arm.

To replace:

— mark the position of the blade in relation to the rearscreen.

— Raise the lid (**A**), slacken the nut (**B**) and remove the arm (**C**).

— Correctly position the new arm and firmly tighten the fastening nut.

— Lower the lid.

SPRAY JET (fig. 12)

If the jet does not spray, check that there is fluid in the windscreen washer reservoir: see the corresponding paragraph in the chapter "Vehicle maintenance". Then check that the holes on the jet (**A**) are not clogged and free them using a pin, if necessary.

LUGGAGE COMPARTMENT

The luggage compartment can be opened by remote control from outside pressing the button (**C-fig. 14**), also when the electronic alarm is on.

WARNING If the tailgate is not shut properly, this will be shown by the corresponding warning light ⊟ and warning message on the Infocenter display.

OPENING FROM INSIDE (fig. 13)

To open the tailgate from inside the passenger compartment pull the lever (**A**) at the side of the driver's seat.

A0B0082m

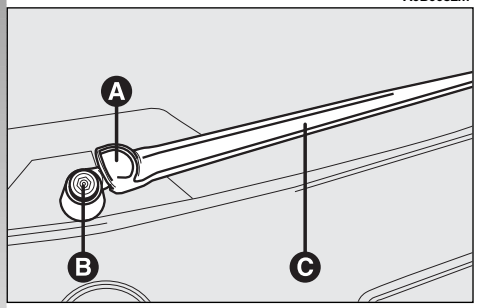

fig. 11

A0B0083m

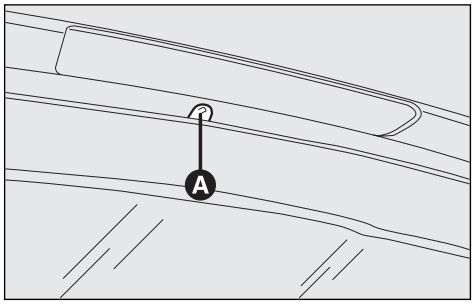

fig. 12

A0B0042m

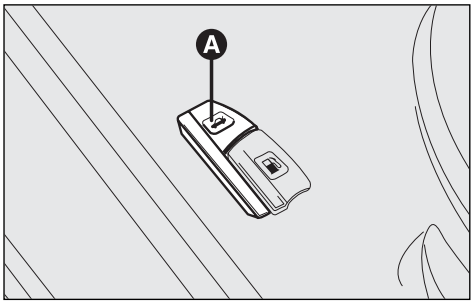

fig. 13

Downloaded from www.Manualslib.com manuals search engine

WARNING

Only use the tailgate opening lever with the car stationary.

Lifting the tailgate is facilitated by the action of the gas springs.

The gas springs are calibrated to ensure correct lifting of the tailgate with the weights foreseen by the manufacturer. The addition of objects (spoiler, etc.) may adversely affect correct operation and safety in use of the tailgate.

OPENING WITH REMOTE CONTROL (fig. 14)

The boot can be opened by remote control pressing the button (**C-fig. 14**) on the key, also when the electronic alarm is engaged.

In this case the alarm system switches off volumetric protection and the tailgate control sensor. The system also sounds two beeps and the direction indicators light up for three seconds (with the exception of versions for certain markets.

Closing the boot again the control functions are restored, the system sounds two beeps and the direction indicators light up for three seconds (with the exception of versions for certain markets.

CLOSING THE TAILGATE (fig. 15)

To lower the tailgate use the grip (**A**) on the interior trim.

A0B0743m

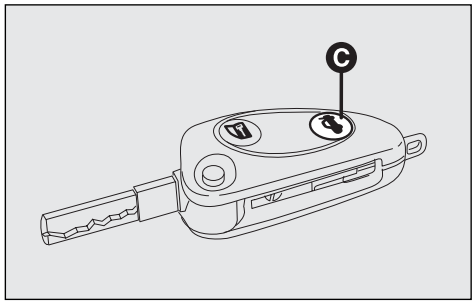

fig. 14

A0B0084m

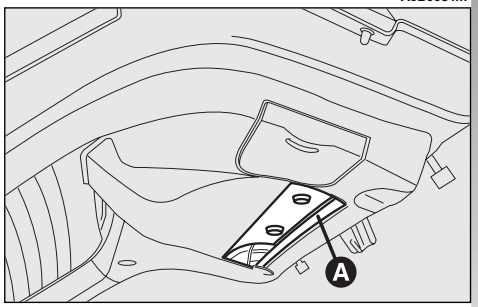

fig. 15

Downloaded from www.Manualslib.com manuals search engine

RESTRAINING THE LOAD (fig. 16-17)

The loads carried can be held in place with the belts hooked to the rings provided at the corners of the boot.

The rings also serve for fastening the luggage retainer net (available on request for versions/markets where applicable c/o Alfa Romeo Authorized Services).

REVERSIBLE MAT (fig. 18-19)

The central part (**A-fig. 18**) of the floor trim is reversible: it can be taken off, turned over and inserted with side (**B**) upwards.

To put the mat back, insert the front edge (**A-fig. 19**) in the housing on the floor.

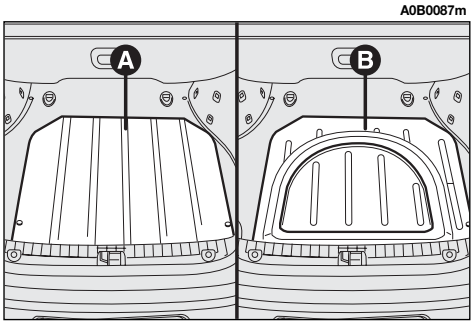

fig. 18

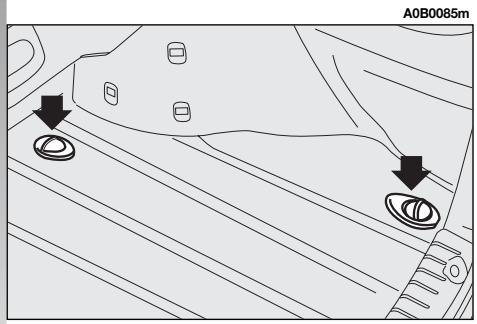

fig. 16

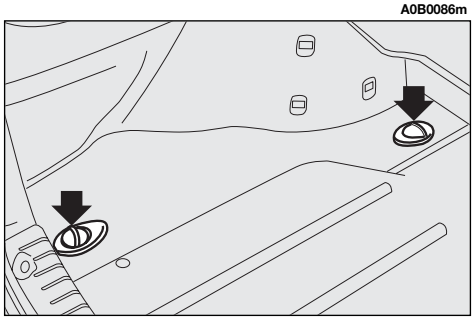

fig. 17

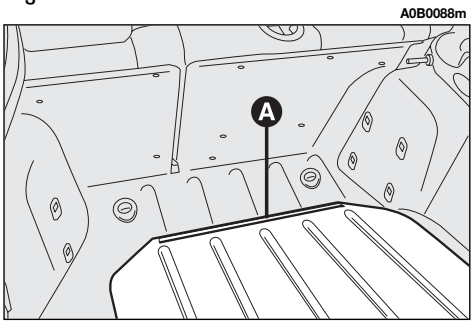

fig. 19

Downloaded from www.Manualslib.com manuals search engine

CAUTIONS FOR CARRYING LUGGAGE

On versions not fitted with the automatic rear geometry control system, when travelling at night with a load in the boot, it is necessary to adjust the height of the low beams (see "Headlamps" paragraph in the chapter "Getting to know your car"). For correct use of the aiming device, also make sure that the load does not exceed the values given in the same paragraph.

WARNING

When using the boot, never exceed the maximum permissible loads given in the "Technical specifications" chapter. Also make sure that the items contained in the boot are firmly secured, to prevent them being thrown forward and harming the passengers in the event of abrupt braking.

WARNING

If you want to carry fuel in a reserve can, you should comply with legal regulations, only using a certified can suitably fastened to the load retainer rings at the corner of the boot. However, remember that this increases the risk of fire in the event of an accident.

WARNING

Heavy luggage without restraints could cause serious harm to the passengers in an accident.

Downloaded from www.Manualslib.com manuals search engine

ODDMENTS COMPARTMENT (fig. 20-21)

On the sides of the boot there are two recesses closed by a lid.

To open the cover, press button (**A**) and turn it downwards. As optional for versions/markets where applicable, the oddment compartment on the left-hand side can be provided with CD-Changer.

CURRENT SOCKET (optional for versions/markets where applicable) (fig. 22)

This is on the left-hand side of the boot.

To use the socket, open the lid (**A**). The socket is supplied with the ignition switch at **MAR** and can only be used with accessories that absorb a maximum of 15A (power 180W).

Do not connect accessories with higher absorption to the socket. Prolonged current absorption might drain the battery preventing the engine from being started.

OBJECTS RETAINER NET

The net can be hooked in different positions (**fig. 26-27-28-29**) using housings (**A** and **B-fig. 23**) provided in the front part of the boot and housings (**C** and **D-fig. 24**) in the rear part.

A0B0091m

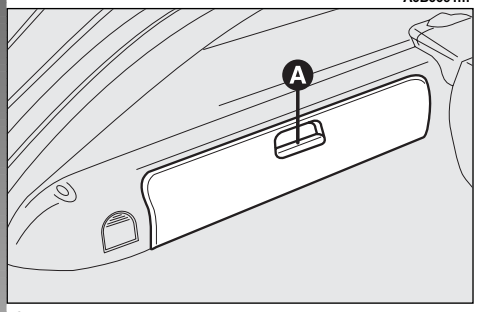

fig. 20

A0B0101m

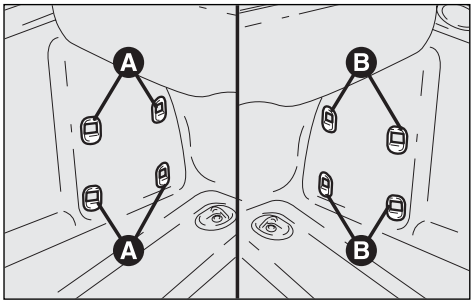

fig. 23

A0B0092m

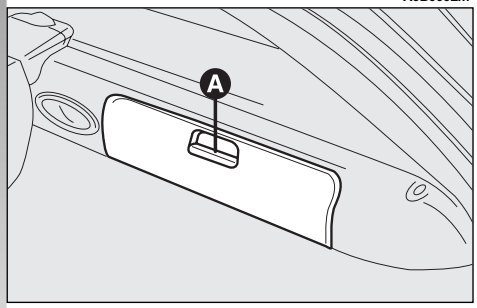

fig. 21

A0B0093m

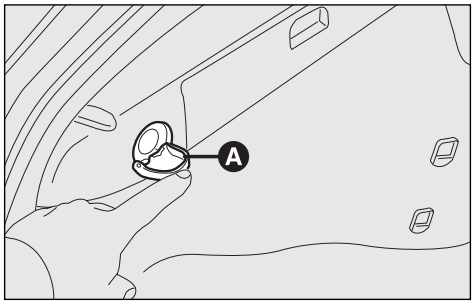

fig. 22

A0B0102m

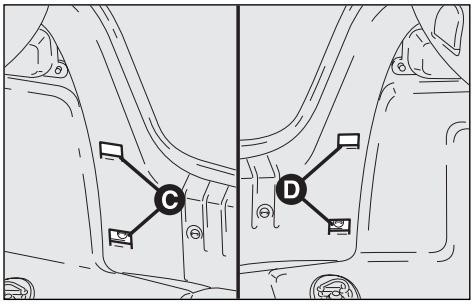

fig. 24

Downloaded from www.Manualslib.com manuals search engine

To fasten the net, insert the hooks (**A-fig. 25**) in the housings (**B-fig. 25**) and push downwards.

To release the net, pull it upwards keeping the connection point pressed (**C-fig. 25**).

LUGGAGE COVER

The luggage cover (**A-fig. 30**) can be rolled up and removed.

To roll, remove the two rear pins (**B-fig. 31**) from their housings.

WARNING Accompany the cover when rolling, holding it by the handle (**C-fig. 30**).

A0B0103m

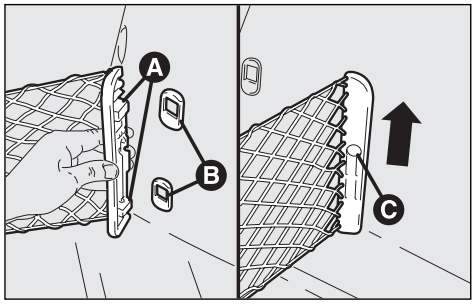

fig. 25

A0B0105m

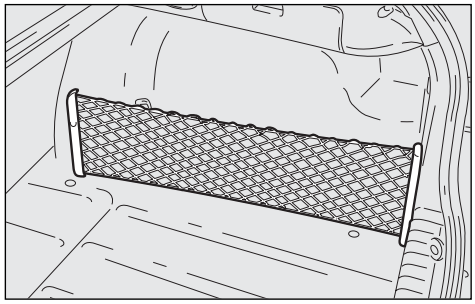

fig. 27

A0B0107m

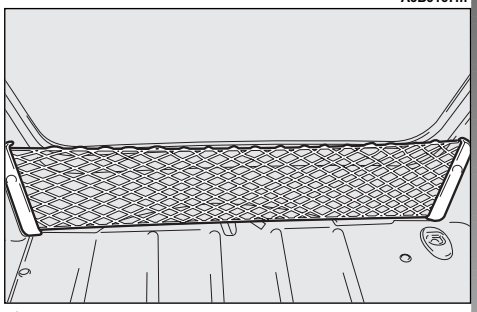

fig. 29

A0B0104m

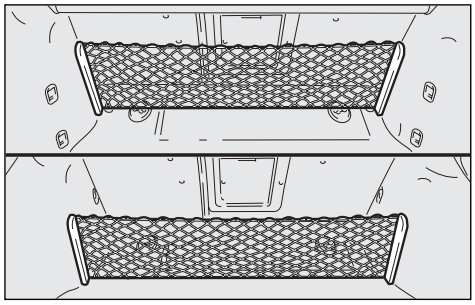

fig. 26

A0B0106m

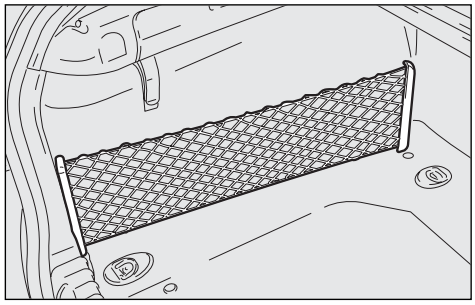

fig. 28

A0B0108m

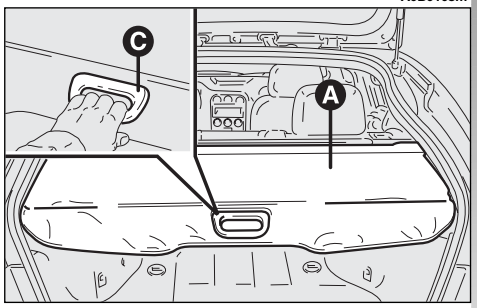

fig. 30

Downloaded from www.Manualslib.com manuals search engine

To remove the cover roll it and check that the passenger compartment separation net is also rolled (see following paragraph), then pull the hooks back (**A-fig. 32**). Raise and remove the cover from the boot.

To put the cover back on, insert the ends of the reel in the respective housings, making sure that the catches are correctly locked forwards making the green symbols at the base of the actual button visible, then pull it by the handle (**C-fig. 30**) and hook the two rear pins (**B-fig. 31**).

To avoid damage to the cover do not rest any objects on it.

WARNING

In the event of an accident or abrupt braking any objects on top of the cover might be thrown into the passenger compartment, with the risk of harming the occupants; use of the passenger compartment separation net is recommended.

UPPER PASSENGER COMPARTMENT SEPARATION NET (fig. 33-34)

The upper separation net between the passenger compartment and the boot is contained in the luggage cover reel (**A**).

To lay the net, remove it from the reel and hook the ends in the two housings (**B**).

To rewind the net, release the ends from the housings (**B**) and accompany it as it winds.

A0B0109m

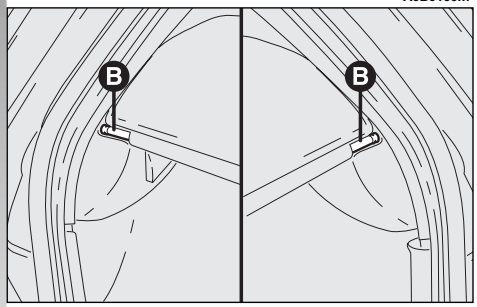

fig. 31

A0B0110m

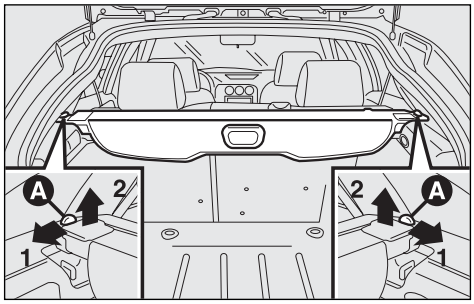

fig. 32

A0B0111m

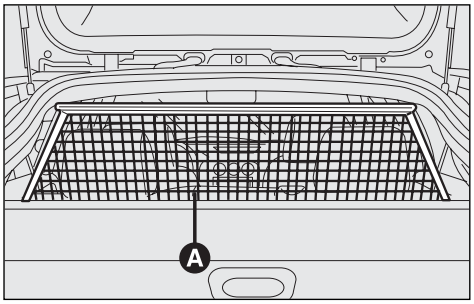

fig. 33

Downloaded from www.Manualslib.com manuals search engine

LOWER PASSENGER COMPARTMENT SEPARATION NET (fig. 35-36) (optional for versions/ markets where applicable)

The lower passenger compartment and boot separation net (**A**) is contained in the reel fastened under the housing of the luggage cover.

To lay the net remove it from the reel and fasten the hooks (**B**) to the rings (**C**).

To rewind the net, release the hooks (**B**) from the rings (**C**) and accompany it while it winds.

EXTENDING THE BOOT

The split rear seat makes partial (1/3 or 2/3) or total extension of the boot possible.

To use the maximum loading volume, remove the luggage cover following the instructions given in the corresponding paragraph.

1/3 Partial extension (fig. 37)

Extension of the left-hand side of the boot makes it possible to carry two passengers on the right-hand part of the rear seat.

A0B0113m

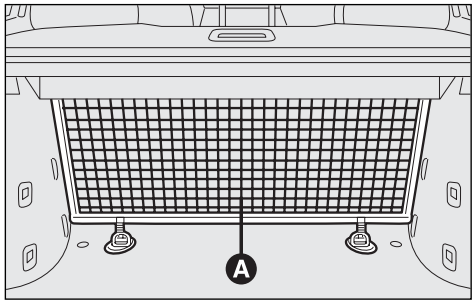

fig. 35

A0B0112m

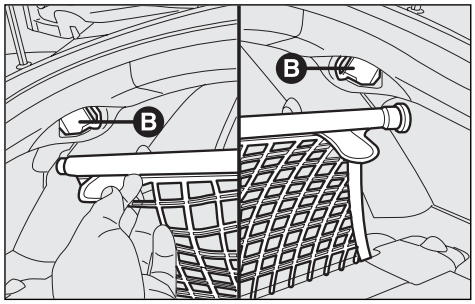

fig. 34

A0B0114m

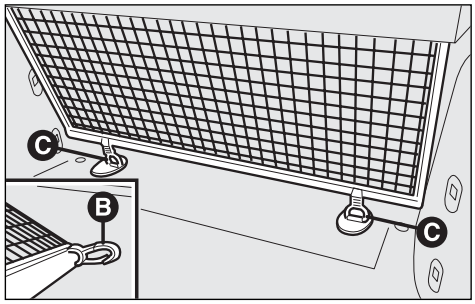

fig. 36

A0B0115m

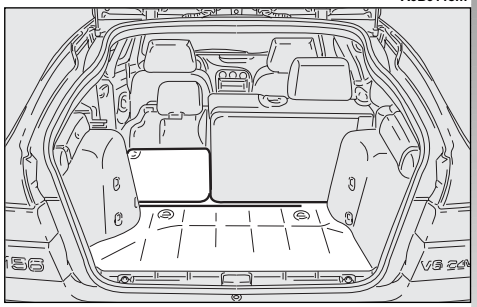

fig. 37

Downloaded from www.Manualslib.com manuals search engine

2/3 Partial extension (fig. 38)

Extension of the right-hand side of the boot makes it possible to carry one passenger on the left-hand part of the rear seat.

A0B0116m

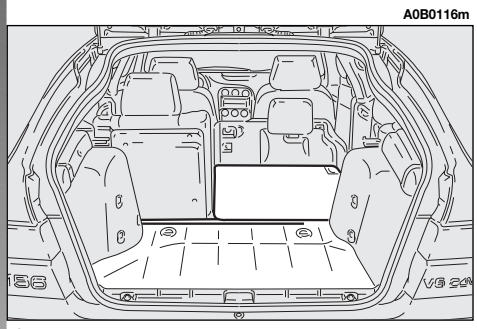

fig. 38

A0B0117m

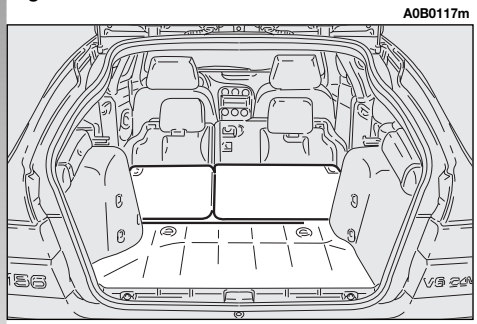

fig. 39

Total extension (fig. 39)

Completely folding the rear seat makes the maximum load volume available.

To extend the boot

— Check that the lateral safety belt buckles (**A-fig. 40**) are located in their pockets on the seat back and that the tab (**B-fig. 40**) of the central abdominal safety belts is hooked onto the support (**C-fig. 40**).

— Remove the roll with the luggage cover.

A0B0118m

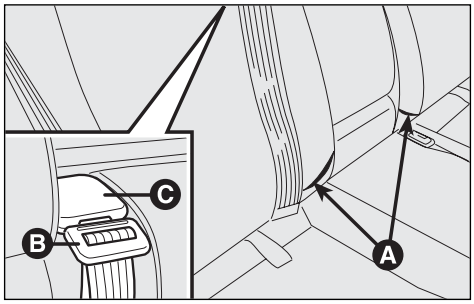

fig. 40

— Tilt the cushions forward pulling from the handle (**A-fig. 41**) at the centre of each cushion.

— remove the side headrests from the rear seat and insert them in the special housings on the cushions (**fig. 42**).

— If the car is fitted with the third headrest from the centre of the seat, lower it completely.

A0B0119m

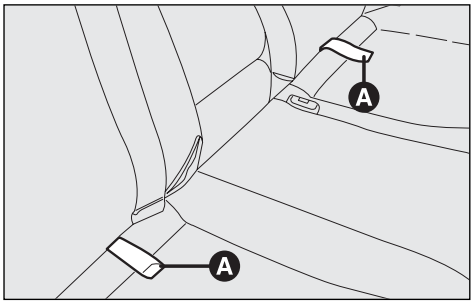

fig. 41

Downloaded from www.Manualslib.com manuals search engine

— Release the seat back catch raising the handle (**A-fig. 43**) for the right seat back and handle (**B-fig. 44**) for the left seat back.

— Fold the seat backs forward to obtain a single loading surface with the boot floor.

To take the seats back to the normal position

— Move the seat backs to the vertical position making sure that they are caught correctly.

WARNING The seat backs are correctly caught when the button (**A-fig. 45**) next to each handle (**B-fig. 45**) is back in the handle.

— Remove the headrest and tilt the cushion backward, making sure that the safety belts do not remain twisted in the hidden section between the cushion and seat back.

— Refit the headrest on the seat back.

— Refit the roll with the luggage cover.

A0B0121m

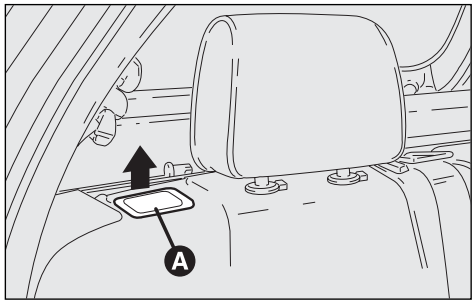

fig. 43

A0B0120m

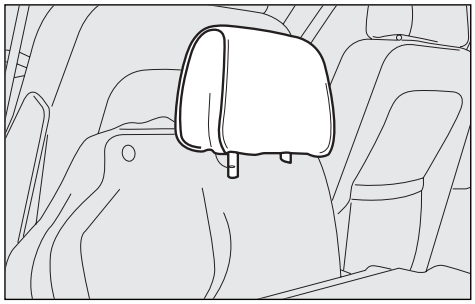

fig. 42

A0B0122m

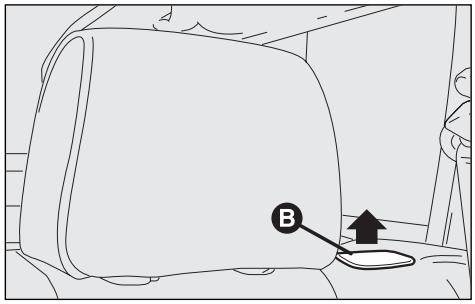

fig. 44

A0B0123m

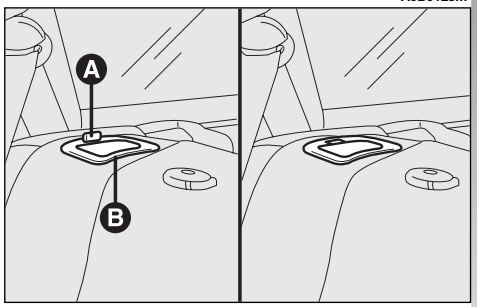

fig. 45

Downloaded from www.Manualslib.com manuals search engine

INTERNAL FITTINGS

GRAB HANDLES (fig. 46)

There are two grab handles in correspondence with the front doors.

Two grab handles (**A**) are located above the rear doors fitted with a coat hook (**B**).

A0B0124m

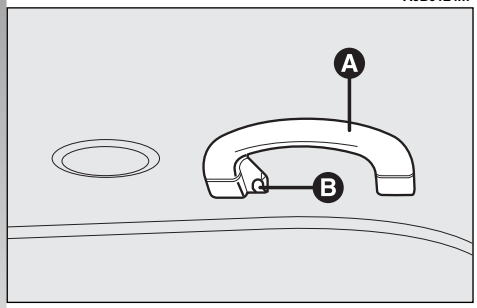

fig. 46

REFUELLING

EMERGENCY FUEL FLAP OPENING (fig. 47)

If the fuel flap opening lever fails to work, pull the emergency cord (**A**) on the right-hand side of the boot.

A0B0125m

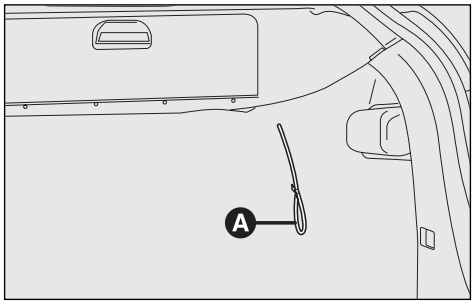

fig. 47

SOUND SYSTEM

The fixed sound system, with CD player with parametric sound equalizer has been designed to suit the specific characteristics of the passenger compartment, with a personalised design that matches the style of the dashboard. The sound system instructions for use are described in the attached supplement.

Downloaded from www.Manualslib.com manuals search engine

IF AN EXTERIOR LIGHT GOES OUT

WARNING Before changing a bulb, read the warnings and precautions given in the chapter "In an emergency".

REVERSING LIGHTS AND REAR FOG GUARDS

To change the bulbs (Type B, 21W):

— Open the tailgate.

— Remove the cover (**A** or **B-fig. 48**) in correspondence with the light concerned, withdrawing it at the side.

— Remove the bulb holder unit (**D-fig. 49**) pressing on the retainer tabs (**E-fig. 49**).

— Remove and replace the bulb concerned (spherical with bayonet coupling) pressing lightly and turning counterclockwise (**fig. 50**):

(**F**) reversing light bulb

(**G**) rear fog guard bulb.

— Reinsert the bulb holder unit fitting it correctly between the retainer tabs (**E-fig. 49**).

— Refit the lid (**A** or **B-fig. 48**) inserting it from outside until it fits in.

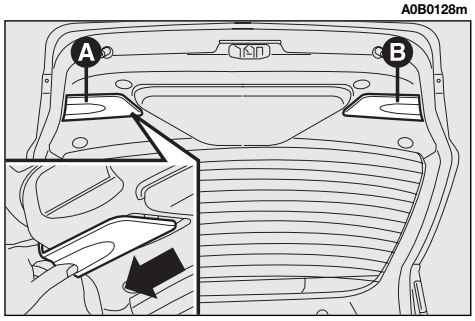

fig. 48

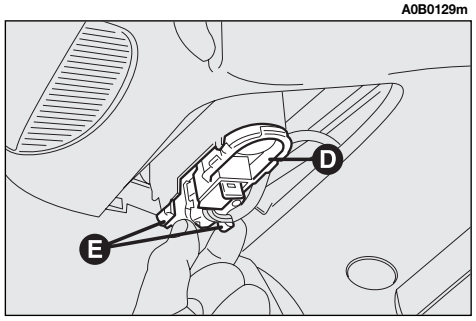

fig. 49

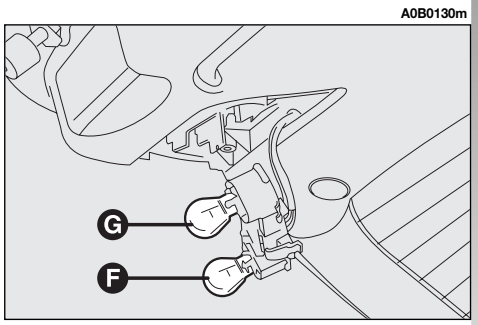

fig. 50

Downloaded from www.Manualslib.com manuals search engine

DIRECTION INDICATORS AND SIDE/STOP LIGHTS

To replace the bulbs (Type B, 21W direction indicators, 5/21W side/stop lights):

— Open the tailgate.

— Slacken the two fastening nuts (**A-fig. 51**) and remove the protective cover (**B-fig. 51**).

— Remove the bulb holder unit (**A-fig. 52**) pressing on the retainer tab (**B-fig. 52**).

— Remove and replace the bulb concerned (spherical with bayonet coupling) pressing lightly and turning counterclockwise (**fig. 53**):

(**C**) side light/stop light

(**D**) direction indicator.

— Reinsert the bulb holder unit fitting the retainer tabs correctly (**B-fig. 52**).

— Refit the protective cover (**B-fig. 51**) fastening with nuts (**A-fig. 51**).

A0B0131m

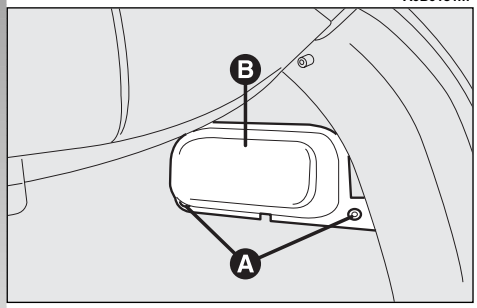

fig. 51

A0B0132m

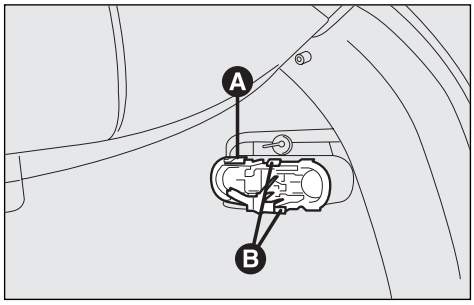

fig. 52

A0B0133m

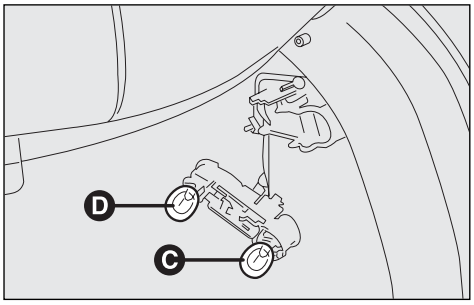

fig. 53

Downloaded from www.Manualslib.com manuals search engine

NUMBER PLATE LIGHTS

To replace the bulbs (Type A, 5W):

— Remove the number plate light unit using a flat-tipped screwdriver protected by a soft cloth on the catch (**A-fig. 54**).

— Remove the unit (**B-fig. 54**).

— Remove the bulb holder (**C-fig. 55**) turning clockwise and replace the bulb (**D-fig. 55**) which snaps on.

— Refit the bulb holder (**C-fig. 55**) turning clockwise.

— Refit the complete unit (**B-fig. 54**) firstly inserting the catches and then pressing in correspondence with the stopper (**A-fig. 54**).

ADDITIONAL STOP LIGHTS (3rd STOP)

The additional stop light is built into the rear spoiler (**fig. 56**).

Refer to the Alfa Romeo Authorized Services for its replacement.

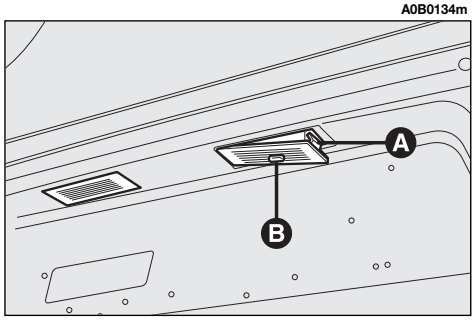

fig. 54

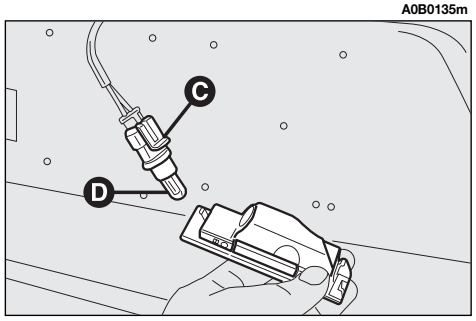

fig. 55

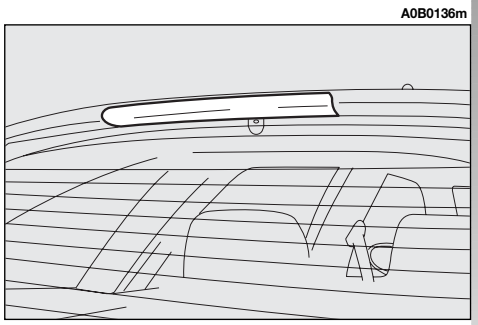

fig. 56

Downloaded from www.Manualslib.com manuals search engine

IF AN INTERIOR LIGHTS GOES OUT

WARNING Before changing a bulb, read the warnings and precautions given in the chapter "In an emergency".

TAILGATE LIGHT

To change the bulb (Type C, 10W):

— Open the tailgate.

— Remove the light (**A-fig. 57**) levering with a flat-tipped screwdriver in the point shown.

— Remove the bulb (**B-fig. 58**) pulling outwards and releasing it from the side contacts.

— Insert the new bulb fitting it correctly between the contacts.

— Refit the light inserting it and then pressing until the catch clicks into place.

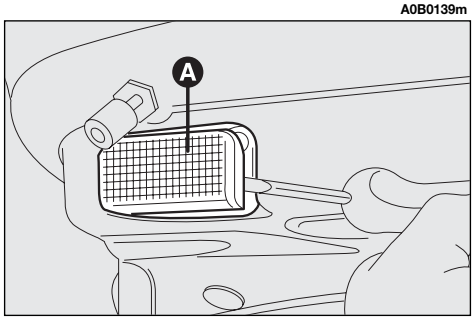

fig. 57

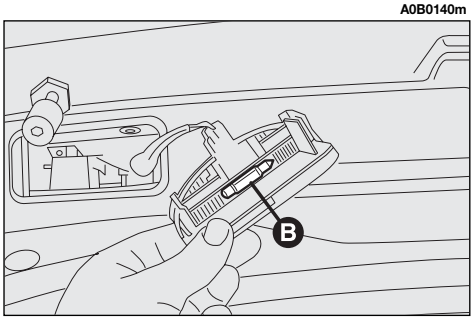

fig. 58

Downloaded from www.Manualslib.com manuals search engine

IF A FUSE BLOWS

The specific fuse for Sportwagon versions is located in the central fuseholder above the main fusebox and access to it is gained removing the protective panel.

WARNING Before changing a fuse or relay, read the warnings and precautions given in the chapter "In an emergency".

System/Component	Fuse no.	Amperage	Location
Additional current socket in the boot	10	20A	fig. 59

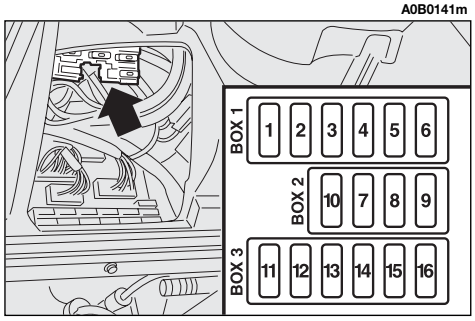

fig. 59

Downloaded from www.Manualslib.com manuals search engine

TECHNICAL SPECIFICATIONS

IDENTIFICATION DATA

The identification data should be recorded. The identification data is carried on labels located in the following positions (**fig. 1-2**):

1 - Identification label
2 - Body label
3 - Bodywork paint identification label
— Saloon versions = **fig. 1**
— Sportwagon versions = **fig. 2**
4 - Engine label.

BODY LABEL

The body label carrying the following information is located in the engine bay to one side of the right-hand shock absorber upper connection:

— Type of vehicle: ZAR 932000

— Manufacturer's serial number (chassis number).

For some versions/markets the marking is partially covered by a protection. To see the marking completely, remove the cap turning counter-clockwise and raise the protection.

ENGINE LABELS

On the rear left-hand side, gearbox side.

A0B0057m

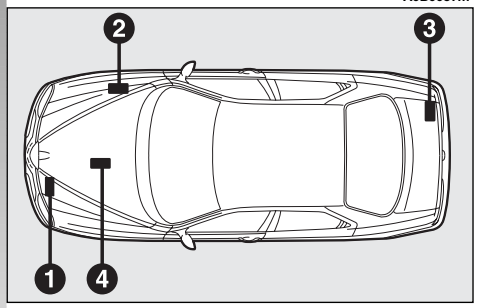

fig. 1

A0B0058m

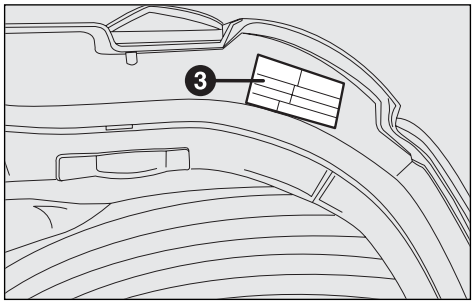

fig. 2

Downloaded from www.Manualslib.com manuals search engine

BODYWORK PAINT IDENTIFICATION LABEL

On the Saloon versions, the plate is applied in the internal part of the luggage compartment (**3-fig. 1**), while on the Sportwagon versions it is applied on the right-hand internal edge of the tailgate (**3-fig. 2**). The plate carries the following data (**fig. 3**):

A. Paint manufacturer

B. Name of colour

C. Colour code.

D. Colour code for touching up and respraying.

IDENTIFICATION LABEL

This is located in the engine bay on the front crossmember (**fig. 4**).

It carries the following identification data:

A. Space for details of national homologation

B. Space for punching the consecutive chassis number

C. Space available for maximum weights authorised by various national laws

D. Space for version and any supplementary indications to those specified

E. Space for smoke index (Diesel versions only)

F. Space for punching manufacturer's name.

A0B0059m

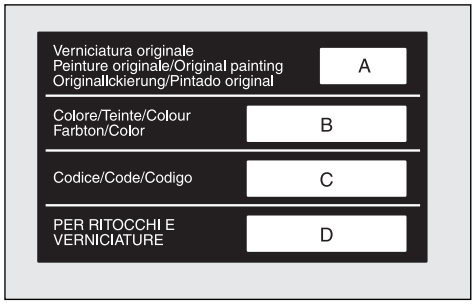

fig. 3

A0B0076m

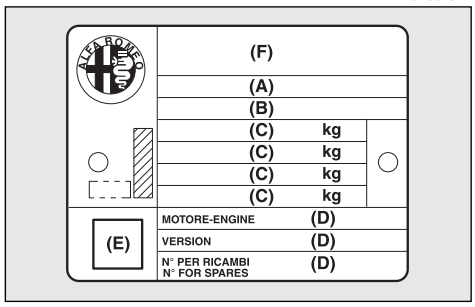

fig. 4

Downloaded from www.Manualslib.com manuals search engine

ENGINE AND BODY VERSION CODES

	Engine code	Body code	
		(Saloon versions)	(Sportwagon versions)
3.2 V6 24V	932A000	932AXB00 46 C	932BXB00 47 C
3.2 V6 24V Selespeed	932A000	932AXB01 48 C	932BXB01 49 C

Downloaded from www.Manualslib.com manuals search engine

ENGINE

		3.2 V6 24V	3.2 V6 24V Selespeed
Code type		932A000	932A000
Cycle		Otto	Otto
Number and position of cylinders		6 in 60° V	6 in 60° V
Piston bore and stroke	mm	93 x 78	93 x 78
Total displacement	cm^3	3179	3179
Maximum horsepower (EEC):			
	kW	184	184
	HP	250	250
at	rpm	6200	6200
Maximum torque (EEC):			
	Nm	300	300
	kgm	30.6	30.6
at	rpm	4800	4800
Spark plugs		NGK R PFR6B	NGK R PFR6B
Fuel		Unleaded petrol 95 RON	Unleaded petrol 95 RON

Downloaded from www.Manualslib.com manuals search engine

FUEL SUPPLY

	3.2 V6 24V	3.2 V6 24V Selespeed
Supply	Electronic injection Multi Point	Electronic injection Multi Point
Firing order	1-4-2-5-3-6	1-4-2-5-3-6

WARNING

Alterations or repairs to the supply system not carried out correctly or without taking account of the technical specifications of the system, may cause abnormal functioning with the risk of fire.

TRANSMISSION

	3.2 V6 24V	3.2 V6 24V Selespeed
Gearbox	Six forward gears plus reverse all synchronised	Six forward gears and reverse with electronic control
Clutch	Dry single disk with hydraulic control	Dry single disk with electrohydraulic control
Drive	Front	Front

Downloaded from www.Manualslib.com manuals search engine

SPARK PLUGS

Clean, intact spark plugs are determinant with regard to engine efficiency and for reducing the emission of pollutants.

If examined by an expert eye, the appearance of a spark plug is a sound clue for locating a fault, even if not involving the ignition system. Therefore if you are experiencing any engine problems, it is important to have the spark plugs checked by Alfa Romeo Authorized Services.

Spark plugs should be replaced at the intervals specified in the Scheduled maintenance programme. Only use spark plugs of the specified type: if the thermal capacity is inadequate or if the envisaged life is not guaranteed inconveniences may ensue.

BRAKES

		3.2 V6 24V	3.2 V6 24V Selespeed
Service brakes:	– front	Disk self-ventilated	Disk self-ventilated
	– rear	Disk	Disk
		Wheel anti-look system (ABS) with electronic braking distribution. Servo-brake. Electronic control with brake pad wear sensors. Gaskets of ecological type.	
Parking brake		Controlled by hand lever operating rear brakes.	

STEERING

	3.2 V6 24V	3.2 V6 24V Selespeed
Type	Rack and pinion. Hydraulic power steering with liquid reservoir in engine compartment	
Turning radius (between pavements)	11.6 m	11.6 m

Downloaded from www.Manualslib.com manuals search engine

WHEELS

	3.2 V6 24V	3.2 V6 24V Selespeed
Standard fittings		
Rims	7.5J x 17" (alloy)	7.5J x 17" (alloy)
Tyres	225/45 ZR17" 91Y (unchainable tyres)	225/45 ZR17" 91Y (unchainable tyres)
Optional fittings		
Tyres	215/45 R17" 87W (*) 215/45 ZR17" 87W (*)	215/45 R17" 87W (*) 215/45 ZR17" 87W (*)
Winter tyres	225/45 ZR17" 91Q (M+S) (unchainable tyres)	225/45 ZR17" 91Q (M+S) (unchainable tyres)

(*) **WARNING** Chainable tyres; see paragraph "Snow chains" in section "Correct use of the car".

Downloaded from www.Manualslib.com manuals search engine

TYRES INFLATION PRESSURES COLD

		Tyres **225/45 ZR17" (•)**		Tyres **215/45 R17" (*)**		Tyres **215/45 ZR17" (*)**	
		front	rear	front	rear	front	rear
Reduced load (2 occupants)	bar	2.5	2.3	2.4	2.4	2.4	2.4
Full load	bar	2.8	2.6	2.6	2.6	2.6	2.6

(•) Unchainable tyres.

(*) **WARNING** Chainable tyres; see paragraph "Snow chains" in section "Correct use of the car".

With the tyre hot the inflating pressure should be +0.3 bar compared with the specified rating. Recheck pressure value with cold tyres.

With winter tyres the inflation pressure should be +0.2 bar compared with the specified rating.

Downloaded from www.Manualslib.com manuals search engine

RIMS AND TYRES

Alloy rims.

Radial Tubeless tyres.

The Log book shows all the homologated tyres.

WARNING In the event of any discrepancies between this Handbook and the vehicle Log Book, only the latter should be considered.

While the specified dimensions remain the same, for driving safety, the vehicle must be fitted with tyres of the same brand and type on all wheels.

WARNING Do not use inner tubes with Tubeless tyres.

CORRECT TYRE READING (fig. 5)

Below are the instructions necessary to know the meaning of the code stamped on the tyre.

The code may be like one of the examples given below.

Example:

225/45 ZR17 91Y

225 = Nominal width (**S**, distance in mm between sides).

45 = Percentage height/width ratio (**H**/**S**).

ZR = Radial tyre with speed above 240 kph.

17 = Rim diameter in inches (**Ø**).

91 = Load index (capacity).

Y = Maximum speed index.

Load index (capacity)

60 = 250 kg
61 = 257 kg
62 = 265 kg
63 = 272 kg
64 = 280 kg
65 = 290 kg
66 = 300 kg
67 = 307 kg
68 = 315 kg
69 = 325 kg
70 = 335 kg
71 = 345 kg
72 = 355 kg
73 = 365 kg
74 = 375 kg
75 = 387 kg
76 = 400 kg
77 = 412 kg
78 = 425 kg
79 = 437 kg
80 = 450 kg
81 = 462 kg
82 = 475 kg
83 = 487 kg
84 = 500 kg
85 = 515 kg
86 = 530 kg
87 = 545 kg
88 = 560 kg
89 = 580 kg
90 = 600 kg
91 = 615 kg
92 = 630 kg
93 = 650 kg
94 = 670 kg
95 = 690 kg
96 = 710 kg
97 = 730 kg
98 = 750 kg
99 = 775 kg
100 = 800 kg
101 = 825 kg
102 = 850 kg
103 = 875 kg
104 = 900 kg
105 = 925 kg
106 = 950 kg

Downloaded from www.Manualslib.com manuals search engine

Maximum speed index

Q = up to 160 km/h
R = up to 170 km/h
S = up to 180 km/h
T = up to 190 km/h
U = up to 200 km/h
H = up to 210 km/h
V = up to 240 km/h
W = up to 270 km/h
Y = up to 300 km/h

Maximum speed index for snow tyres

Q M + S = up to 160 km/h
T M + S = up to 190 km/h
H M + S = up to 210 km/h

CORRECT RIM READING

Below are the instructions necessary to know the meaning of the code stamped on the rim, as shown in (**fig. 5**).

Example:
7.5 J x 17 H2 ET 43

7.5 = rim width in inches (**1**)
J = rim drop centre outline (side projection where the tyre bead rests (**2**)
17 = rim nominal diameter in inches (corresponds to diameter of the tyre to be mounted) (**3** = **Ø**)
H2 = "hump" shape and number (relief on the circumference holding the Tubeless tyre bead on the rim)
ET 43 = camber angle (distance between disk/rim line and wheel rim centre line)

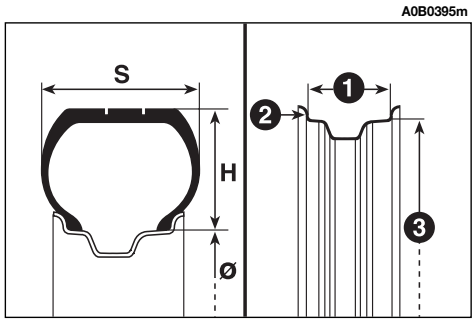

fig. 5

Downloaded from www.Manualslib.com manuals search engine

WHEEL GEOMETRY

		3.2 V6 24V - 3.2 V6 24V Selespeed
Front wheels:	– camber	– 0° 24´ ± 20´
	– caster	4° 6´ ± 30´
	– toe-in	–2 ± 0.6 mm (*) (–18 ± 5)
Rear wheels:	– camber	– 1° 12´ ± 20´
	– toe-in	2.5 ± 1 mm (*) (23´ ± 9)

(*) The toe-in value, primes to mm conversion, is always calculated taking into account a 15" rim regardless of rims actually used. Should it be impossible to set the 15" rim at the test bench, refer to primes value. The toe-in value, tolerance included, shall always be evenly distributed between the two wheels.

Downloaded from www.Manualslib.com manuals search engine

PERFORMANCE

SALOON VERSIONS	3.2 V6 24V	3.2 V6 24V Selespeed
Maximum speed	250 km/h	250 km/h
Acceleration from 0-100 km/h	6.3 s	6.3 s
Kilometer with standing start	25.9 s	25.9 s

SPORTWAGON VERSIONS	3.2 V6 24V	3.2 V6 24V Selespeed
Maximum speed	250 km/h	250 km/h
Acceleration from 0-100 km/h	6.3 s	6.3 s
Kilometer with standing start	25.9 s	25.9 s

Downloaded from www.Manualslib.com manuals search engine

DIMENSIONS

A0B0342m

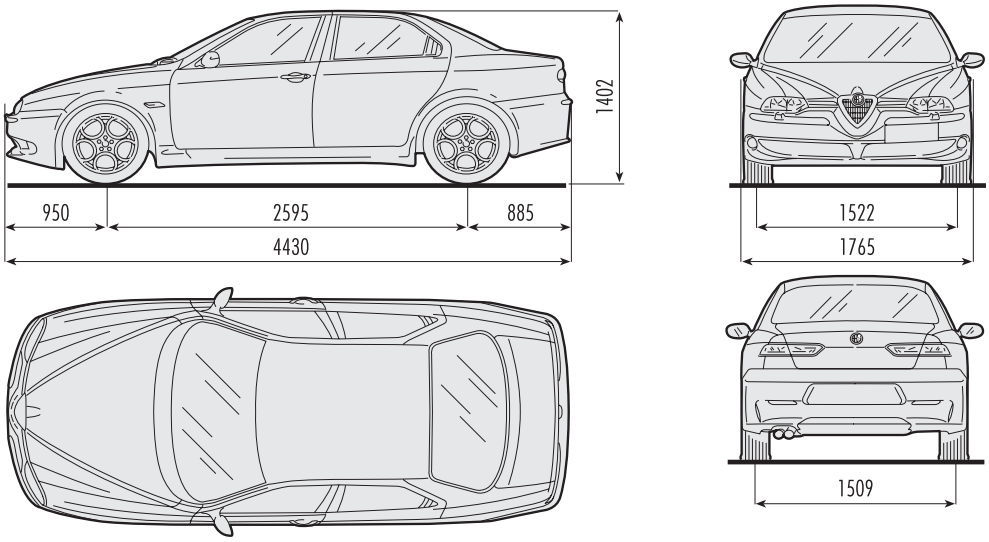

fig. 6

Dimensions are expressed in mm

Height indicated is for an unladen car

Downloaded from www.Manualslib.com manuals search engine

A0B0341m

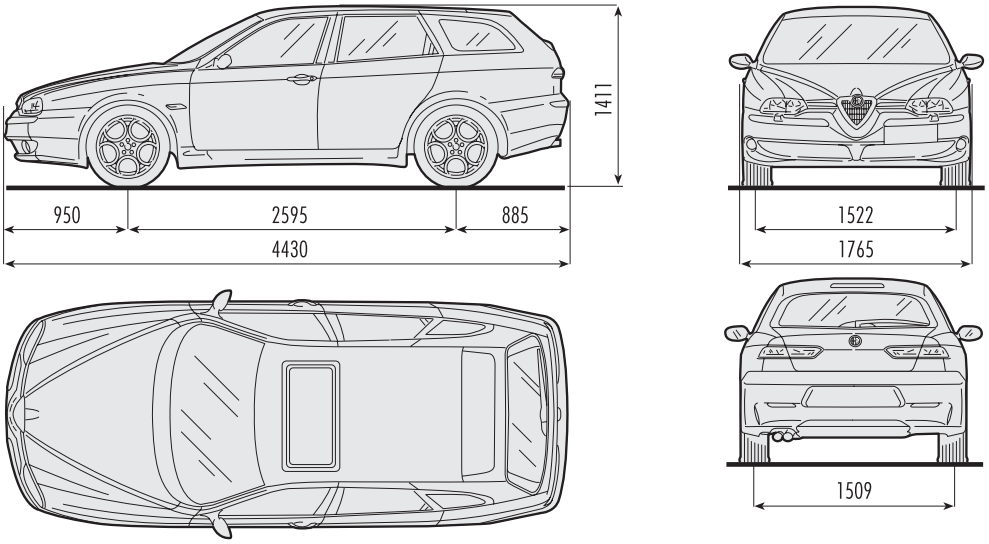

fig. 7

Dimensions are expressed in mm

Height indicated is for an unladen car

Downloaded from www.Manualslib.com manuals search engine

LUGGAGE COMPARTMENT - SALOON VERSIONS

	3.2 V6 24V	3.2 V6 24V Selespeed
Capacity (dm^3)	378	378

WEIGHTS - SALOON VERSIONS

	3.2 V6 24V	3.2 V6 24V Selespeed
Kerb weight	1410 kg	1410 kg
Max. permitted weight (*)	1910 kg	1910 kg
Payload including driver (**)	500 kg	500 kg

(*) Weight not to be exceeded. The Driver must arrange the goods in the luggage compartment and/or load surface so that they comply with these limits.

(**) If special equipment is fitted (sunroof etc.) the unladen weight increases, thus reducing the payload as specified in the maximum weight allowed.

Downloaded from www.Manualslib.com manuals search engine

LUGGAGE COMPARTMENT - SPORTWAGON VERSIONS

	3.2 V6 24V	3.2 V6 24V Selespeed
Capacity (dm^3)	360	360
Capacity with rear seat back folded (dm^3)	1180	1180

WEIGHTS - SPORTWAGON VERSIONS

	3.2 V6 24V	3.2 V6 24V Selespeed
Kerb weight	1460 kg	1460 kg
Max. permitted weight (*)	1955 kg	1955 kg
Payload including driver (**)	495 kg	495 kg

(*) Weight not to be exceeded. The Driver must arrange the goods in the luggage compartment and/or load surface so that they comply with these limits.

(**) If special equipment is fitted (sunroof etc.) the unladen weight increases, thus reducing the payload as specified in the maximum weight allowed.

Downloaded from www.Manualslib.com manuals search engine

REFILLING

		3.2 V6 24V	3.2 V6 24V Selespeed	Specified fuels Recommended products
Fuel tank: – including a reserve of	litres litres	63 7	63 7	Unleaded Premium petrol with no less than 95 R.O.N
Engine cooling system	litres	9.2	9.2	Mixture of distilled water and **PARAFLU 11** (blue) at 50% or **PARAFLU UP** (red) at 50%
Oil sump and filter	litres	5.90	5.90	**SELENIA RACING**
Mechanical gearbox/ differential	litres	2.0	2.0	**TUTELA CAR MATRYX**
Selespeed gearbox actuation hydraulic system	litres	–	0.6	**TUTELA CAR CS SPEED**
Windscreen washer and rearscreen washer fluid reservoir: – with headlamp washer	litres litres	2.5 5.3	2.5 5.3	Mixture of water and liquid **TUTELA PROFESSIONAL SC 35**

Downloaded from www.Manualslib.com manuals search engine

FLUIDS AND LUBRICANTS

USABLE PRODUCTS AND THEIR SPECIFICATIONS

Use	Quality features of fluids and lubricants for correct vehicle operation	Recommended fluids and lubricants	Applications
Lubricants for petrol engines	SAE 10W-60 synthetic lubricant	**SELENIA RACING**	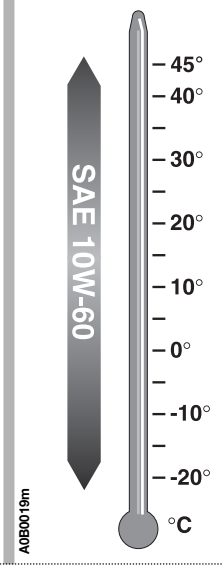

WARNING Do not top up with oil with different specifications that the oil already in the engine.

Downloaded from www.Manualslib.com manuals search engine

Use	Quality features of fluids and lubricants for correct vehicle operation	Recommended fluids and lubricants	Applications
Lubricants and greases for transmissions	SAE 75W-85 synthetic oil. Meets API GL 4 and MIL-L-2105 D LEV specifications	**TUTELA CAR MATRYX**	Mechanical gearbox and differential
	ATF DEXRON III type oil	**TUTELA CAR CS SPEED**	Selespeed transmission electrically-operated electrohydraulic drive
	ATF DEXRON II D LEV type oil	**TUTELA GI/A**	Hydraulic power steering
	Lithium-soap-based grease with molybdenum bisulphate. Consistency NLGI 2	**TUTELA MRM 2**	C.V. joints
Brake fluid	F.M.V.S.S. n° 116 DOT 4, ISO 4925, SAE J1704, CUNA NC 956-01 synthetic fluid	**TUTELA CAR TOP 4 for Alfa Romeo**	Hydraulic brake and clutch control
Protective agent for radiators	Protective with antifreeze action, blue color, based on inhibited monoethylene glycol, CUNA NC 956-16	**PARAFLU 11 (*)** or **PARAFLU UP (*)**	Cooling ducts Percentage: 50% down to –35°C
	Protective with antifreeze action, red colour, based on inhibited monoethylen glycol, with O.A.T.-based organic formula, that passes CUNA NC 956-16, ASTM D 3306 specifications		
Windscreen/ rearscreen/headlamp washer fluid	Mixture of spirits and surface-active agents CUNA NC 956-11	**TUTELA PROFESSIONAL SC 35**	To be used neat or diluted

(*) **IMPORTANT** Do not add or mix with fluids with specifications other than the specified ones.

Downloaded from www.Manualslib.com manuals search engine

FUEL CONSUMPTION

The fuel consumption values shown in the following tables were established during homologation tests prescribed in specific European Directives.

The test conditions adopted include the following:

— **an urban cycle**: this includes cold starting followed by simulation of a mixed urban route;

— **an extraurban cycle**: this includes frequent accelerating in all gears, simulating normal extraurban use of the vehicle; the speed varies between 0 and 120 kph;

— **combined consumption**: this is calculated by considering a route consisting of about 37% urban cycle and 63% extraurban cycle.

WARNING The type of route, traffic conditions, weather conditions, driving style, conditions of the vehicle, trim level/equipment/ accessories, vehicle load, presence of roof rack, use of the climate control system, other items that negatively affect the aerodynamics of the vehicle or wind resistance lead to different fuel consumption levels than those measured by the above-mentioned procedures (see "Reducing running costs and environment pollution" in the chapter "Correct use of the car").

Downloaded from www.Manualslib.com manuals search engine

CONSUMPTION ACCORDING TO EEC 1999/100/ (litres x 100 km)

SALOON VERSIONS	3.2 V6 24V	3.2 V6 24V Selespeed
Urban	18.1	18.1
Extraurban	8.6	8.6
Combined	12.1	12.1

SPORTWAGON VERSIONS	3.2 V6 24V	3.2 V6 24V Selespeed
Urban	18.4	18.4
Extraurban	8.8	8.8
Combined	12.3	12.3

Downloaded from www.Manualslib.com manuals search engine

CO_2 EMISSIONS

The CO_2 emission levels shown in the following tables are measured on a mixed cycle.

CO_2 EMISSIONS ACCORDING TO DIRECTIVE 1999/100/EC (g/km)

SALOON VERSIONS	3.2 V6 24V	3.2 V6 24V Selespeed
Value (g/km)	287	287

SPORTWAGON VERSIONS	3.2 V6 24V	3.2 V6 24V Selespeed
Value (g/km)	293	293

Downloaded from www.Manualslib.com manuals search engine

RADIO FREQUENCY REMOTE CONTROL: MINISTERIAL HOMOLOGATIONS

International code	Country	Certification number
A	Austria	
B	Belgium	
CH	Switzerland	
D	Germany	
DK	Denmark	
E	Spain	
EST	Estonia	
F	France	
GB	Great Britain	
GR	Greece	
I	Italy	
IRL	Eire	
IS	Island	
L	Luxembourg	
N	Norway	
NL	Netherlands	
P	Portugal	
S	Sweden	
SF	Finland	

CE 0523

Downloaded from www.Manualslib.com manuals search engine

Downloaded from www.Manualslib.com manuals search engine

DECLARATION OF CONFORMITY

CE 0523 (!)

This declaration is the responsibility of the manufacturer/ authorized representative within the Coumunity :

SIEMENS AUTOMOTIVE S.A.
Avenue du Mirail BP1149 31036 TOULOUSE Cedex 1
(Name / Address)

This certifies that the following designated products

AR 156
(Product identification)

complies with the essential protection requirements of R&TTE Directive 1999/5/ EC on the approximation of the laws of the Member States relating to ***Radio Spectrum Matters, EMC*** and ***Electrical Safety.***
This declaration applies to all specimens manufactured in accordance with the technical documentation described in the annex II. SIEMENS AUTOMOTIVE S. A. keep this documentation at the proposal of the relevant national authorities of any Member State for inspection purpose.
Assessment of compliance of the product with the requirements relating to the essential requirements acc. to Article 3 R&TTE was based on Annex IV of the Directive 1999/5/ EC and the following standards:

Radio Spectrum : .....EN 300 220.....
(Identification of regulations / standards)

EMC : .....ETS 300 683.....
(Identification of regulations / standards)

Safety : .....EN 60950.....
(Identification of regulations / standards)

(!) The designated products are a 433MHz radio equipments not submitted to harmonized standards. Those devices are licence exempt and will be distributed in the European countries which will apply the R&TTE directive : Austria, Belgium, Denmark, Estonia, Finland, France, Germany, Greece, Iceland, Ireland, Italy, Luxembourg, Netherlands, Norway, Portugal, Spain, Sweden, Switzerland and UK.

(Place, date) Toulouse 1.8.00 (Signature)

(Name in block letters)
Hans HOOWMORST

ALPHABETICAL INDEX

ABD system 155
ABS 152
Air bags, front and side
- deactivating passenger's air bag 42
- front air bags 40
- general cautions 45
- passenger side front air bag 43
- side air bags (side bag - window bag) 43
Air filter
- check and replacement 225
- Air recirculation 116
Air vents 100-101
Alfa 156 GTA Sportwagon ... 238
Alfa Romeo CODE system 6
Antievaporation system 161
Ashtray
- front 140
- rear 141
ASR system 154

Battery 226
- advice for prolonging life 229
- charging 208-228
- checking the charge 228
- replacement 229
- starting with an auxiliary battery 208
Body (cleaning) 234-235
- body versions..... 260
Body marking 258
Bonnet 148
Boot
- capacity 272-273
- lighting 147
- opening from inside 146
- opening with remote control 8-146
- passenger compartment separation net (lower) 249
- passenger compartment separation net (upper) 248
- securing the load 147
- tailgate closing 147
- warnings for carrying luggage ... 148
Boot extension
- partial 249-250
- total 250
Boot light
- changing bulb 199
- courtesy light 139
Brake and clutch fluid
- checking level and topping up ... 223
- handbrake 125
- specifications 263
Bulbs (replacement) 183

Car lifting
- with arm hoist..... 211
- with workshop hoist 211

Downloaded from www.Manualslib.com manuals search engine

Car maintenance 214
Carrying children safely 33
Catalyst 161
Changing battery of key
with remote control 10
Changing bulbs 183
- general instructions 184
- types of bulbs 184-185
Charging the battery 228
Checking levels 219
- brake and clutch fluid 223
- engine coolant 222
- engine oil 220
- power steering oil 222
- Selespeed gearbox oil 221
- windscreen/
headlamp washing fluid 224
Child safety device (doors) 19
Child's seats
(compliance with regulations) 36
Children (carrying safely) 33
Cigar lighter 140
Cleaning and maintenance
- car exterior 234-235
- car interior 237
- engine compartment 236
- leather seats 237
- plastic parts 237
- windows 236
Climate control system 99
Climate control system,
automatic two-zone 101
Clock 56
Clutch
- checking fluid level
and topping up 223
CO_2 emissions 279
CODE card 7
Control buttons 61
Controls 122
Correct use of the car 162
Courtesy light 139
Cruise control
(constant speed adjustment) 52
Current socket 246
Dashboard 55
Dashboard lighting dimming 123
Demisting-defrosting
- rearscreen and door mirrors 24
- windscreen and side windows.... 119
Dimensions 270-271
Direction indicators
- changing front bulbs 189
- changing rear bulbs 194
- changing side bulbs 192
- switching on 48
Door mirrors (adjustment) 23
Doors
- central locking 18
- opening/closing from inside..... 18
- opening/closing from outside ... 17
- remote locking/unlocking 8
EBD 93
Economy and environment-
friendly driving 170
Electronic alarm system 11

Downloaded from www.Manualslib.com manuals search engine

- ministerial homologation 15
- shutting off the system 15
- switching off 13
- switching on 12
- volumetric protection 14
Electronic control units 230
Emergency starting 164-175
Engine
- identification codes 260
- marking 258
- opening the bonnet 148
- specifications 261
- switching off 163
- warming 163
Engine codes 260
Engine compartment
- bonnet 148
- cleaning 236
Engine coolant
- checking level and topping up ... 222
- temperature gauge and warning light 57
Engine oil
- checking level and topping up.... 220
- consumption 220
Environment (safeguarding) 160
EOBD system 156

First-aid kit 213
Fix&Go (quick tyre repair kit) 178
Flashing high beams 48
Fluids and lubricants (specifications) 275
Front foglights
- changing bulbs 190
- switching on 122
Front roof light 138
- changing bulbs 196
Front seats
- adjustments 20
- electric heating 21
- rear pockets 21
Fuel
- consumption 277-278
- fuel cap 159
- inertial fuel cut-off switch 123
- level gauge and reserve warning light 57
- refuelling 274
Fuel flap 159
- emergency opening 160-252
Fuel level gauge and reserve warning light 57
Fuel reserve 274
Fuel supply 262
Fuel tank (capacity) 274
Fuses
- list of protected devices 204
- fuses in fusebox on dashboard .. 201
- fuses in fusebox on battery pole 201
- fuses in engine compartment 203
- fuses in the glovebox 202
- generalities 200

Getting to know your car ... 6
Glovebox 137
Glovebox light
- changing bulbs 198

Downloaded from www.Manualslib.com manuals search engine

- rear lights 139
Grab handles 138-252

Handbrake lever 125
Hazard lights
- switching on 122
Headlamp aiming device 150
Headlamp washer 51-234
Headlamps 150
- beam aiming 150
- compensation for tilt 150
- front foglight adjustment 151
- gas discharge headlamps 151
Headlight corrector 124
Headrests
- rear 22
Heating
- automatic two-zone climate control 101
High beam headlamps
- changing bulbs 188-192
- switching on 47

Identification data 258
Ignition device 16
In an emergency 175
In the event of an accident 212
- if anybody is injured 212
Infocenter display 59
Inside rear-view mirror (adjustment) 23
Instrument cluster 56
- lighting adjustment 123
Interior (cleaning) 237
Interior lighting
- boot lighting 147
- dashboard lighting (dimming) .. 123
- glove compartment lighting 137
- infocenter display lighting 58
Internal fittings 137-252
Isofix (child's seat)..... 37

Key..... 6
- replacing remote control battery.. 10

Lambda sensors 161
Low beam headlamps
- changing bulbs 187-190
- switching on 47
Luggage compartment cover..... 247
Luggage retainer net 246-247

Maintenance
- additional operations..... 217
- annual inspection plan 217
- scheduled maintenance 214
- scheduled maintenance programme 215
Mechanical gearbox
- lever 126

Number plate lights
- changing bulbs 195

Oddment recesses 141

Paintwork (maintenance) 235
- colour label 259
Parking 164

Downloaded from www.Manualslib.com manuals search engine

Performance 269
Pollen filter 226
Pockets on doors 142
Power steering
- checking fluid level and topping up 222
Power windows 24
- front 24
- rear 25
Pretensioners 30
Protecting devices that reduce emissions 170

Radio transmitters and cellular telephones 143
Rain sensor 50
Rear fog guards
- changing bulbs 193
- switching on 123
Rear roof lights 139-140
- changing bulbs 197-198
Rear seat
- centre armrest 21
- headrests 22
- ski compartment 22
Rearscreen heating 24-120
Rearscreen washer 241
- blade 241
- spray jet 242
Rearscreen wiper
- blade replacement 241
- operation 241
Reducing running costs and environment pollution 168
Refuelling 274
Remote control
- additional remote controls 12
- alarm system 11
- changing battery 10
- door opening-closing 7
- ministerial homologation 15-280
Rev counter 57
Reversing light
- changing bulbs 193
Rubber hoses 232

Safe driving 164
Safeguarding the environment 160
Scheduled maintenance programme 215
Seat belts
- carrying children safely 33
- rear centre lap belt 28
- front and rear belt height adjustment 29
- general instructions for use 31
- maintenance 32
- pretensioners 30
- rear abdominal centre belt housing 28
- use of seat belts 26
Securing the load 147
Selespeed gearbox 127
Side lights
- changing front bulbs 189-191
- changing rear bulbs 194
- switching on 47
Ski compartment 22

Downloaded from www.Manualslib.com manuals search engine

Snow chains 172
Sound system 157-252
Sound system
- presetting system 157
Spark plugs 263
Speedometer 56
Spray jets
- windscreen/rearscreen/ headlamp 234
Starting the engine..... 162
- ignition switch..... 16
- starting by inertia 177
- starting procedure 162
- starting with an auxiliary battery 176
- switching off the engine 163
- warming the engine 163
Starting with an auxiliary battery.... 176
Steering system
- specifications 263
- steering wheel adjustments 23
Steering lock 17
Steering wheel adjustment 22
Steering wheel levers 47
Stop lights (changing bulbs) 194
Stopping the engine 163
Sun roof
- emergency manoeuvre 145
- opening-closing 144
- raising at rear 144
Sun visors 142
Symbols 6

Tailgate 145
- opening from inside 146
- opening from outside 8
- opening with remote control 8-146
Technical specifications 258
Telephone (provision) 142
Third stop light
- changing bulbs 195
Towing the car 209
Towing trailers 171
Transmission 262
Tyres
- correct reading 266
- inflation pressure 231-265
- snow chains 172
- types of tyres and rims 264
- winter tyres 172

Useful accessories 174

Vehicle data plates 259
Vehicle exterior and under-body warranty 235
Vehicle identification 258
Vehicle inactivity 173
- using again 174
Ventilation
- automatic two-zone climate control 101
Volumetric protection 14

Downloaded from www.Manualslib.com manuals search engine

Windows
- cleaning 236

Windscreen washer
- checking fluid level and topping up 224
- "intelligent washing" function ... 50
- operation 49
- spray jets 234

Windscreen wiper
- blade replacement 233
- "intelligent washing" function .. 50
- operation 49
- spray jet 234

Winter
- snow chains 172
- winter tyres 172-264

Downloaded from www.Manualslib.com manuals search engine

NOTES

Downloaded from www.Manualslib.com manuals search engine

Downloaded from www.Manualslib.com manuals search engine

Downloaded from www.Manualslib.com manuals search engine

Downloaded from www.Manualslib.com manuals search engine

Downloaded from www.Manualslib.com manuals search engine

Downloaded from www.Manualslib.com manuals search engine

SELÈNIA®

In the heart of those who race.
At the heart of your engine.

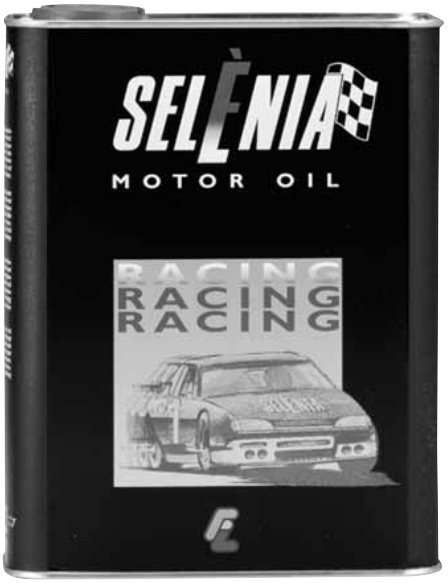

Always ask your mechanic for SELÈNIA®

Downloaded from www.Manualslib.com manuals search engine

Your car is factory filled with Selenia Racing

The Selenia range, satisfies the most sophisticated international specifications. Highly advanced and tested technical characteristics allow Selenia to be a lubricant able to guarantee the maximum protection and performance of your engine.

SELENIA RACING

lis a lubricant which is particularly suited for competition use of T urismo vehicles this lubricant is the result of the Selenia racing team's lenghtly experience on some of the most important international circuits.
It guarantees maximum protection at high temperatures

SELENIA RACING *assicura inoltre:*

- maximum use of power output;
- constant pressure within lubrication system in all kinds of application;
- optimum viscosity at the highest of temperatures.

Can be used in aspirated turbocharged or multivalve petrol engines of any capacity.

The Selenia range includes Selenia 20K, Selenia 20K Alfa Romeo, Selenia Performer 5W-30 e 5W-40, Selenia Turbo Diesel, Selenia WR, Selenia Digitech.

For further information on Selenia products visit the web site **www.flselenia.com**.

Downloaded from www.Manualslib.com manuals search engine

RIGHT HAND DRIVE VERSION

This supplement describes the main characteristics of the right hand drive version.

For any topic not specifically dealt with in this supplement, refer to the main Owner's manual which should be thoroughly read to ensure that the vehicle is used correctly and that the maximum performance is obtained under conditions of safety.

Downloaded from www.Manualslib.com manuals search engine

DASHBOARD

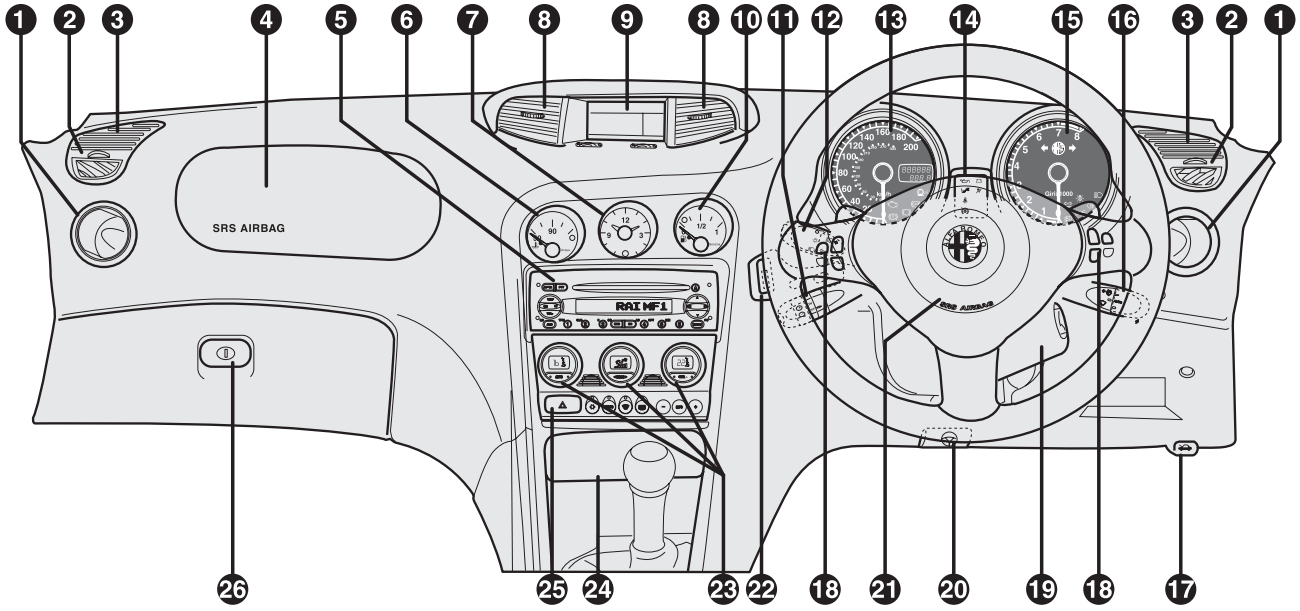

fig. 1

1. Side air outlets - **2.** Defrosting/demisting vents for side windows - **3.** Upper side vents - **4.** Passanger's Air bag - **5.** Sound system - **6.** Engine coolant temperature gauge - **7.** Clock - **8.** Centre air vents - **9.** Infocenter display - **10.** Fuel level gauge - **11.** Cruise control lever (where fitted) - **12.** Outside lights control lever - **13.** Speedometer. - mileage recorder - **14.** Check panel - **15.** Rev counter - **16.** Windscreen wiper control lever - **17.** Bonnet opening lever - **18.** Radio controls on the steering wheel (where applicable) - **19.** Ignition switch - **20.** Steering wheel lock/release lever - **21.** Driver's Air bag and horns - **22.** Controls unit: instrument panel lighting adjustment and healamp diming - **23.** Controls for heating, ventilation and climate control - **24.** Ashtray and cigar lighter - **25.** Hazard lights - **26.** Glove box.

Downloaded from www.Manualslib.com manuals search engine

INSTRUMENT PANEL

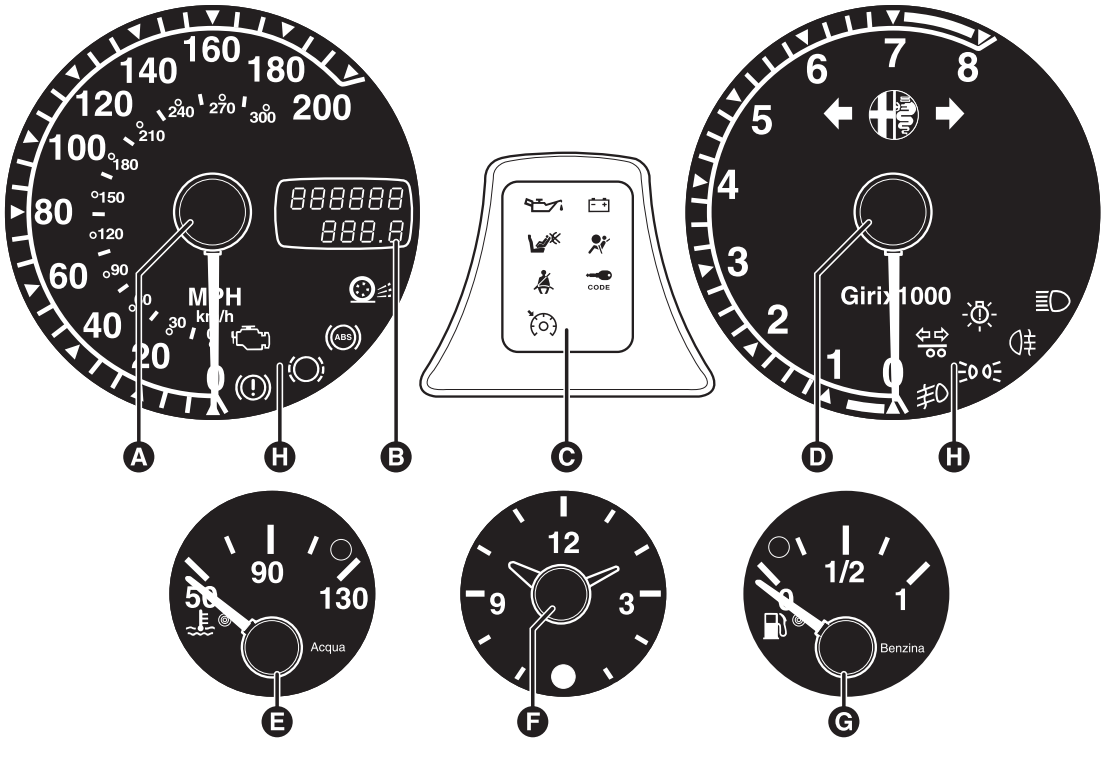

fig. 2

A. Speedometer - **B.** Mileage recorder and trip meter display - **C.** Check panel - **D.** Rev counter - **E.** Engine coolant temperature gauge - **F.** Clock - **G.** Fuel level gauge - **H.** Services warning lights

Downloaded from www.Manualslib.com manuals search engine

MILEAGE RECORDER WITH DOUBLE METER DISPLAY (TOTAL AND TRIP)

The display shows:

— the mileage on the first line (6 figures)

— the trip meter (4 figures).

To reset the trip meter, keep the button (**A**) pressed for a few seconds.

WARNING The trip meter reading is not stored if the battery is disconnected.

DASHBOARD LIGHTING ADJUSTMENT (fig. 3)

When the outside lights are on, the dashboard lighting is adjusted pressing button (**B**).

Each press of the button (**B**) cyclically selects one of the three lighting levels provided: low-medium-high.

HEADLIGHT CORRECTOR (fig. 3)

The control (**C**) on the plate at the side of the steering column can be moved to four positions corresponding to various vehicle loads given below.

Both headlights should be adjusted to compensate for vehicle loading.

Position **0**: 1 or 2 people occupying front seats, full fuel tank, on-board equipment present.

Position **1**: 5 people on-board.

Position **2**: 5 people on-board, luggage compartment full (50 kg approximately).

Position **3**: Driver and 300 kg in luggage compartment.

A0B0418m

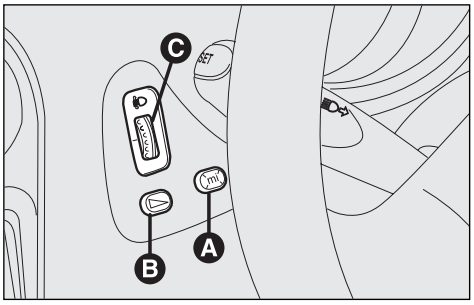

fig. 3

Downloaded from www.Manualslib.com manuals search engine

SEATS

FRONT SEATS (fig. 4)

WARNING

Adjustments may be made solely with the car stationary.

Moving the seat backwards or forwards

Lift lever (**A**) and push the seat backwards or forwards. Once you have let go of the lever, check that the seat is firmly locked in the runners by trying to move it back and forth.

If the seat is not locked properly, in the case of collision it might move unexpectedly with clearly dangerous consequences.

Electric adjusting seat inclination

This can be done pressing the button (**B**) until the desired position is reached.

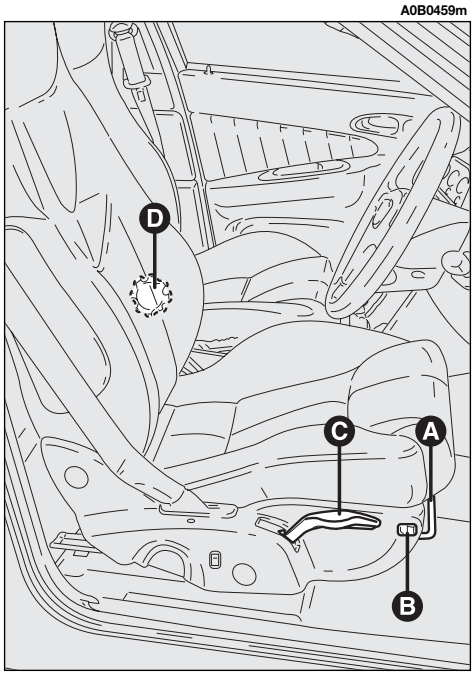

fig. 4

Adjusting the height of the driver's seat

To raise the seat, pull the lever (**C**) taking it upwards, then continue operating the lever (up and down) until reaching the required height.

To lower the seat, push the lever (**C**) downwards, then operate the lever (up and down) until reaching the height required.

WARNING Adjustment must only be carried out when seated in the driver's seat.

Lumbar adjustment of the driver's seat

(for versions/markets where applicable)

Adjustment is done by turning the knob (**D**) until reaching the most comfortable position.

Downloaded from www.Manualslib.com manuals search engine

CONTROLS

AUTOMATIC FUEL CUT-OFF SWITCH (fig. 5)

This is an automatic safety switch under the passanger's seat which is triggered in the event of crash to interrupt the flow of fuel.

WARNING

If a smell of fuel is noted following an accident, or the fuel system is leaking, to avoid the risk of fire do not reset the switch.

If no leaks are found the vehicle can be restarted. Press button (**A**) to activate the fuel supply system.

A0B0327m

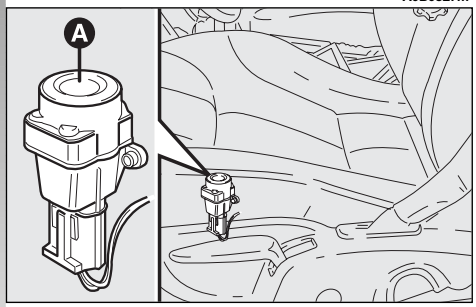

fig. 5

OPENING THE BOOT (fig. 6)

To open the boot pull the lever (**A**) at the side of the driver's seat.

WARNING

Do not operate the boot release lever with the car on the move.

A0B0421m

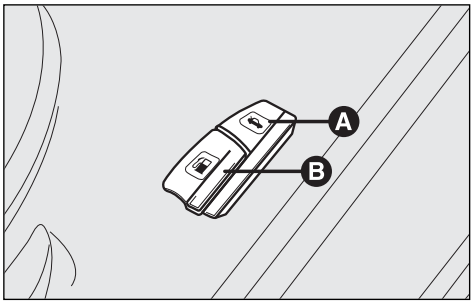

fig. 6

OPENING THE FUEL FLAP (fig. 6)

The fuel flap is released from inside the car raising the front part of the lever (**B**).

Downloaded from www.Manualslib.com manuals search engine

HEATING AND CLIMATE CONTROL

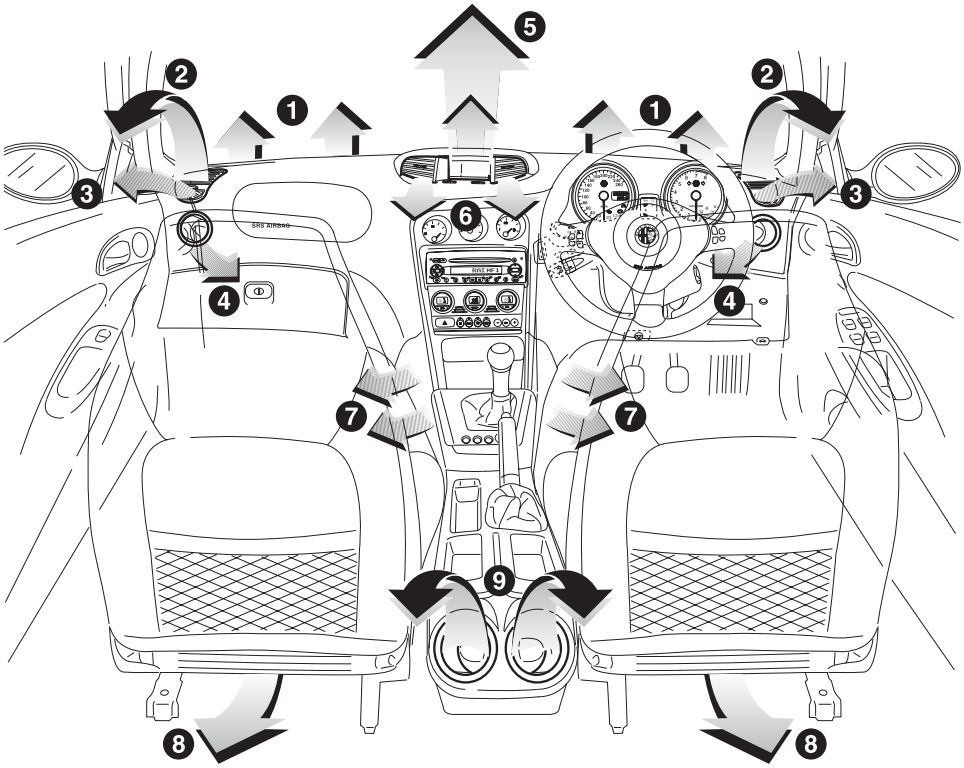

fig. 7

1. Central vents for demisting/defrosting the windscreen - **2.** Upper adjustable side vents - **3.** Vents for demisting/defrosting the side windows - **4.** Movable side outlets - **5.** Upper adjustable vent - **6.** Central movable and adjustable vents - **7.** Front seat floor vents - **8.** Rear seat floor vents - **9.** Rear seat adjustable and movable outlets.

Downloaded from www.Manualslib.com manuals search engine

ADJUSTING THE UPPER VENT (fig. 8)

The vent is fitted with an opening/closing control.

● = Completely closed.

= Completely open.

ADJUSTING THE CENTRE VENTS (fig. 9)

Each vent has a lever through which it is possible to direct the flow of air towards the persons horizontally.

Using the opening/closing control it is possible to adjust the air flow rate of the vents.

● = Completely closed.

= Completely open.

ADJUSTING THE SIDE VENTS (fig. 10)

At the ends of the dashboard there are adjustable vents (**A**) for ventilating the passenger compartment and fixed vents (**B**) for demisting the side windows.

To adjust the air flow of the vents turn the ring (**C**).

● = Completely closed.

= Completely open.

ADJUSTABLE AND MOVABLE OUTLETS

Fig. 11: Front seats (at the ends of the dashboard)

Fig. 12: Rear seats (on the console between the seats)

A0B0458m

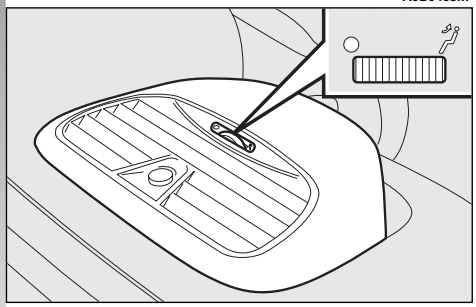

fig. 8

A0B0340m

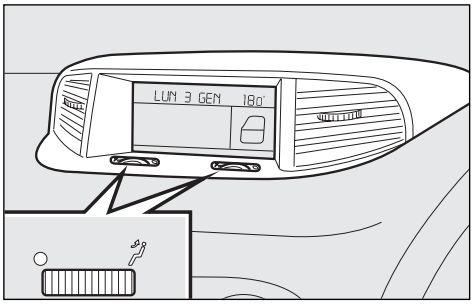

fig. 9

A0B0297m

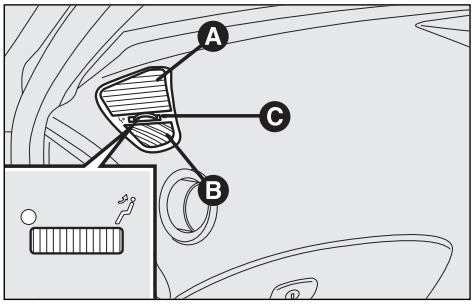

fig. 10

Downloaded from www.Manualslib.com manuals search engine

To adjust the air flow rate use the fins (**A**) pressing to open/close.

The air flow is directed by turning the outlets using the fins.

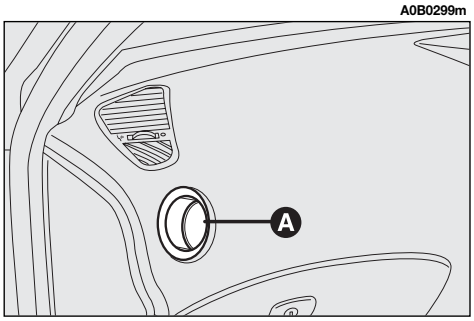

fig. 11

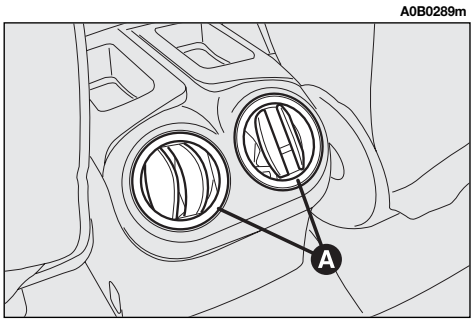

fig. 12

AIR BAG

DEACTIVATING THE PASSENGER'S AIR BAG

Should it be absolutely necessary to carry a child on the front seat, the passenger's Air bag on the vehicle can be deactivated.

Deactivation takes place using the car ignition key to operate the special switch on the left hand side of the dashboard (**fig. 13**). Access to the switch is gained only with the door open.

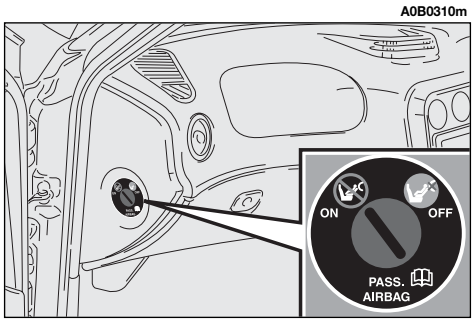

fig. 13

The key-operated switch (**fig. 13**) has two positions:

1) Passenger's Air bag activated: (**ON** position ⊗) warning light on instrument cluster off; it is absolutely prohibited to carry a child on the front seat.

2) Passenger's Air bag deactivated:

(**OFF** position) warning light on instrument cluster on; it is possible to carry a child protected by special restraint systems on the front seat.

The warning light on the cluster stays on permanently until the passenger's Air bag is reactivated.

When the door is open, the key can be inserted and removed in both positions.

Downloaded from www.Manualslib.com manuals search engine

WARNING

SERIOUS DANGER!

with a car fitted with an Air bag on the passenger's side, do not place a child's seat on the front seat facing backwards. In the case of need, always deactivate the passenger's Air bag (if fitted) when a child's seat is placed on the front seat. Even if it is not compulsory by law, for better protection of adults, you are recommended to activate the Air bag immediately as soon as child transport is no longer necessary.

SELESPEED GEARBOX

Below you will find the more significant particulars of right-hand drive versions.

WARNING As the differences are only formal, due to the specular position of the controls, as far as functioning is concerned, please refer to the descriptions given for left-hand drive versions.

Fig. 14 shows the gearshift lever with the lay-out of the movements needed to select the different gears.

Fig. 15 shows the steering wheel fitted with two buttons on the spokes for shifting the gear engaged up/down.

Fig. 16 shows the position of button **A** for selecting the automatic **CITY** mode.

A0B0411m

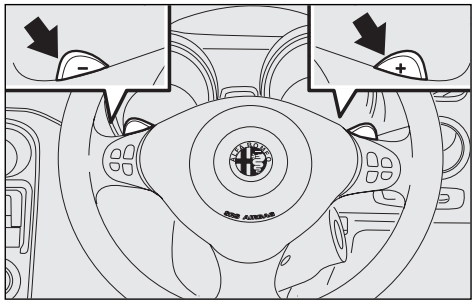

fig. 15

A0B0464m

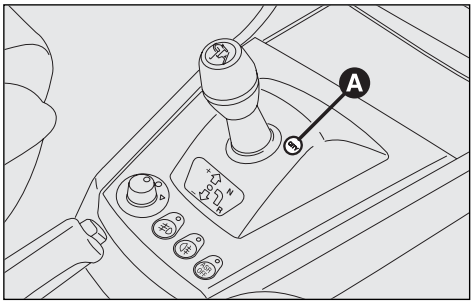

fig. 14

A0B0465m

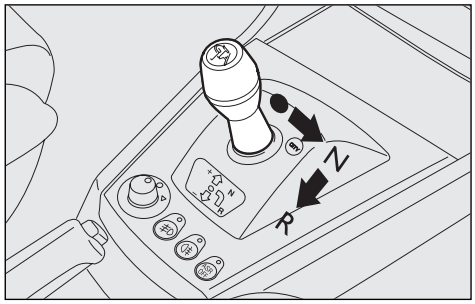

fig. 16

Downloaded from www.Manualslib.com manuals search engine

IN THE EVENT OF A BURNT FUSE OR RELAY

FUSES IN THE MAIN FUSEBOX (fig. 17) or (fig. 18 for versions/markets where applicable)

The fuses for the main devices are housed in a control unit under the dashboard, to the right of the steering column.

To gain access to them, remove the panel (**A-fig. 17** or **A-fig. 18**) releasing the tabs (**B-fig. 17** or **B-fig. 18**) in the direction of the arrow below and unlock the screw (**C-fig. 17** or **C-fig. 18**).

WARNING In case of doubt, contact an Alfa Romeo Authorized Service.

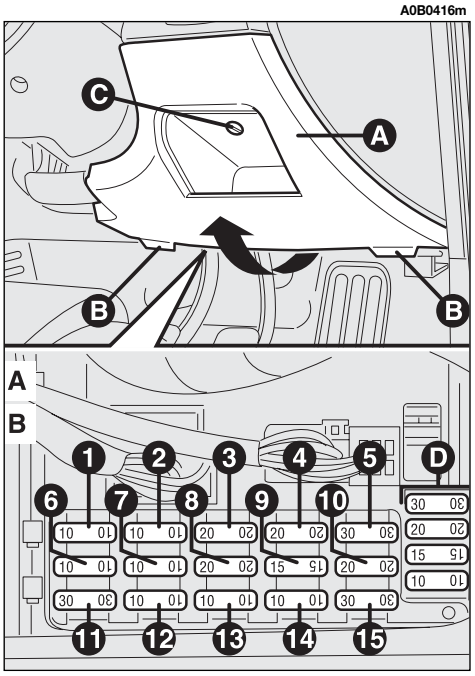

fig. 17

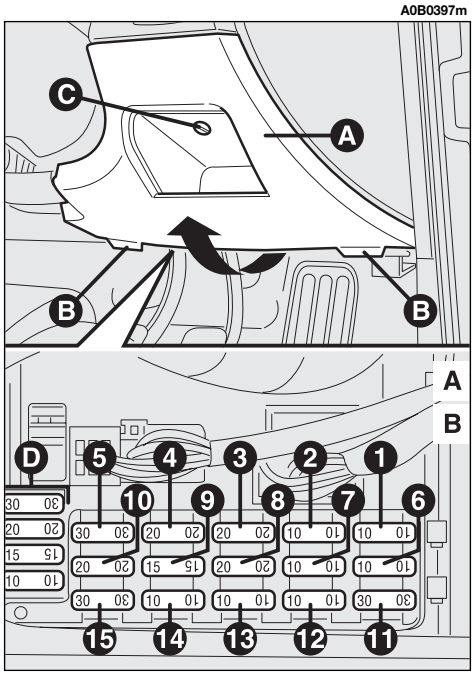

fig. 18

Downloaded from www.Manualslib.com manuals search engine

The graphic symbols which distinguish the main electric component corresponding to each fuse are given on a label (**fig. 19**) on the inner wall of the panel (**A-fig. 17** or **A-fig. 18**).

Some spare fuses are housed at the right of the control unit; you are advised to replenish the stock of spare fuses when they are used.

FUSES ABOVE THE MAIN FUSEBOX

The protection fuses for some services are grouped in three containers (**fig. 20**) above the main fusebox to which access is gained removing the panel (**A-fig. 17** or **A-fig. 18**).

A0B0185m

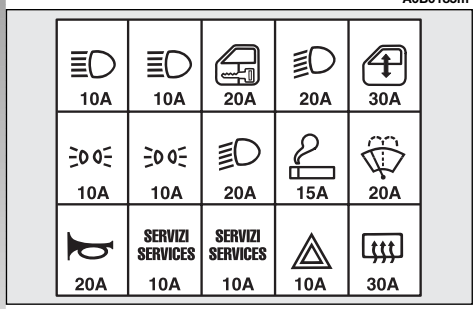

fig. 19

A0B0417m

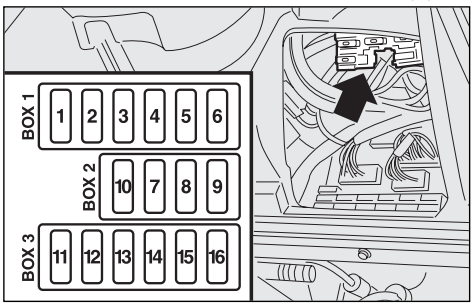

fig. 20

Downloaded from www.Manualslib.com manuals search engine

NOTES

Downloaded from www.Manualslib.com manuals search engine

Downloaded from www.Manualslib.com manuals search engine

Downloaded from www.Manualslib.com manuals search engine

TYRES INFLATION PRESSURE COLD (bar)

		Tyres **225/45 ZR17" (•)**		Tyres **215/45 R17" (*)**		Tyres **215/45 ZR17" (*)**	
		front	rear	front	rear	front	rear
Reduced load (2 occupants)	bar	2.5	2.3	2.4	2.4	2.4	2.4
Full load	bar	2.8	2.6	2.6	2.6	2.6	2.6

(•) Unchainable tyres.

(*) **WARNING** Chainable tyres; see paragraph "Snow chains" in section "Correct use of the car".
Increase the specified pressure by +0.3 bar if the tyre is warm.
With the tyre hot the inflating pressure should be +0.3 bar compared with the specified rating. Recheck pressure value with cold tyres.
With winter tyres the inflation pressure should be +0.2 bar compared with the specified rating.

ENGINE OIL REPLACEMENT (litres)

	3.2 V6 24V	**3.2 V6 24V Selespeed**
Oil sump and filter	5.90	5.90

Do not discard used oil in the environment.

REFUELLING (litres)

	3.2 V6 24V	**3.2 V6 24V Selespeed**
Fuel tank capacity	63	63
Reserve	7	7

Only use unleaded petrol with over 95 R.O.N.

AFTER SALES
ASSISTENZA TECNICA - INGEGNERIA ASSISTENZIALE
Viale Alfa Romeo 20020 Arese (MI) - Italia
Fiat Auto S.p.A.
Publication no. 60431344 - 5th Edition - 10/2004
Printed by Satiz - Turin (Italy)

All rights reserved. Reproduction, even in part is prohibited without written permission from Fiat Auto S.p.A.

Coordinamento Editoriale Satiz - Torino

Downloaded from www.Manualslib.com manuals search engine

ENGLISH

Alfa Romeo
SERVICE

Downloaded from www.Manualslib.com manuals search engine