BRAKE SYSTEM

SECTION BR

CONTENTS

PRECAUTIONS AND PREPARATION 3
Precautions 3
Special Service Tools 4
Commercial Service Tools 4
CHECK AND ADJUSTMENT 5
Checking Brake Fluid Level 5
Checking Brake Line 5
Changing Brake Fluid 5
AIR BLEEDING 6
Bleeding Procedure 6
BRAKE HYDRAULIC LINE 7
Removal 8
Inspection 8
Installation 8
CONTROL VALVE 9
Proportioning Valve 9
BRAKE PEDAL AND BRACKET 11
Removal and Installation 11
Inspection 11
Adjustment 11
MASTER CYLINDER 12
Removal 12
Disassembly 12
Inspection 13
Assembly 13
Installation 14
BRAKE BOOSTER 15
On-vehicle Service 15
Removal 15
Inspection 16
Installation 16
VACUUM HOSE 17
Removal and Installation 17
Inspection 17
FRONT DISC BRAKE 19
Pad Replacement 19
Removal 22
Disassembly 22
Inspection — Caliper 22
Inspection — Rotor 23
Assembly 23
Installation 24
REAR DRUM BRAKE 25
Removal 25
Inspection — Wheel Cylinder 26
Wheel Cylinder Overhaul 27
Inspection — Drum 27
Inspection — Lining 27
Installation 27
REAR DISC BRAKE 29
Pad Replacement 29
Removal 31
Disassembly 31
Inspection — Caliper 32
Inspection — Rotor 33
Assembly 33
Installation 35
PARKING BRAKE CONTROL 36
Removal and Installation 36
Inspection 36
Adjustment 37
ANTI-LOCK BRAKE SYSTEM 38
Purpose 38
Operation 38
ABS Hydraulic Circuit 38
System Components 39
System Description 39
Removal and Installation 40
Wiring Diagram — ABS — 45
TROUBLE DIAGNOSES 52
Contents 52
Component Parts and Harness Connector Location 64
SERVICE DATA AND SPECIFICATIONS (SDS) 86
General Specifications 86
Inspection and Adjustment 88

CONTENTS (Cont'd.)

When you read wiring diagrams:
- Read GI section, "HOW TO READ WIRING DIAGRAMS".
- See EL section, "POWER SUPPLY ROUTING" for power distribution circuit.

When you perform trouble diagnoses, read GI section, "HOW TO FOLLOW FLOW CHART IN TROUBLE DIAGNOSES" and "HOW TO PERFORM EFFICIENT DIAGNOSIS FOR AN ELECTRICAL INCIDENT".

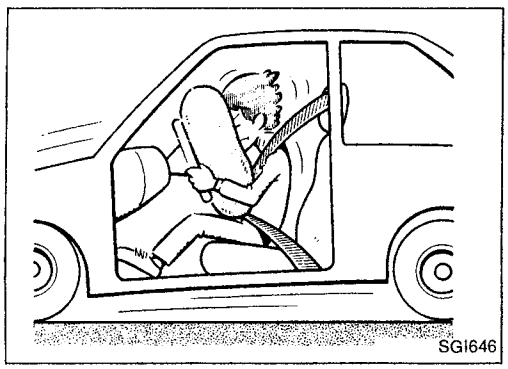

Precautions

SUPPLEMENTAL RESTRAINT SYSTEM (SRS) "AIR BAG" (DUAL AIR BAG SYSTEM)

The Supplemental Restraint System "Air Bag" used along with a seat belt, helps to reduce the risk or severity of injury to the driver and front passenger in a frontal collision. The Supplemental Restraint System consists of air bag modules (located in the center of the steering wheel and on the instrument panel on the passenger side), a diagnosis sensor unit, warning lamp, wiring harness and spiral cable. Information necessary to service the system safely is included in the **RS section** of this Service Manual.

WARNING:

- **To avoid rendering the SRS inoperative, which could increase the risk of personal injury or death in the event of a collision which would result in air bag inflation, all maintenance must be performed by an authorized NISSAN dealer.**
- **Improper maintenance, including incorrect removal and installation of the SRS, can lead to personal injury caused by unintentional activation of the system.**
- **Do not use electrical test equipment on any circuit related to the SRS unless instructed to in this Service Manual. SRS wiring harnesses are covered with yellow insulation either just before the harness connectors or for the complete harness, for easy identification.**

SUPPLEMENTAL RESTRAINT SYSTEM (SRS) "AIR BAG" (SINGLE AIR BAG SYSTEM)

The Supplemental Restraint System "Air Bag" and used along with a seat belt, helps to reduce the risk or severity of injury to the driver in a frontal collision. The Supplemental Restraint System consists of an air bag module (located in the center of the steering wheel), a diagnosis sensor unit, warning lamp, wiring harness and spiral cable. Information necessary to service the system safely is included in the **RS section** of this Service Manual.

WARNING:

- **To avoid rendering the SRS inoperative, which could increase the risk of personal injury or death in the event of a collision which would result in air bag inflation, all maintenance must be performed by an authorized NISSAN dealer.**
- **Improper maintenance, including incorrect removal and installation of the SRS, can lead to personal injury caused by unintentional activation of the system.**
- **Do not use electrical test equipment on any circuit related to the SRS unless instructed to in this Service Manual.**

Precautions (Cont'd)

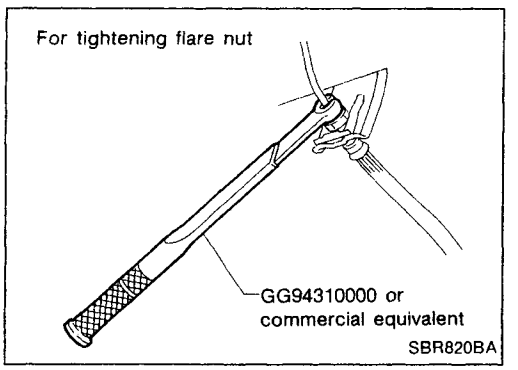

BRAKE SYSTEM

- **Recommended fluid is brake fluid "DOT 3" or "DOT 4".**
- **Never reuse drained brake fluid.**
- **Do not mix different types of brake fluids (DOT 3, DOT 4).**
- **Be careful not to splash brake fluid on painted areas; it may cause paint damage. If brake fluid is splashed on painted areas, wash it away with water immediately.**
- **To clean master cylinder parts, disc brake caliper parts or wheel cylinder parts, use clean brake fluid.**
- **Never use mineral oils such as gasoline or kerosene. They will ruin rubber parts of hydraulic system.**
- **Use flare nut wrench when removing and installing brake tubes.**
- **Always torque brake lines when installing.**

WARNING:

- **Clean brakes with a vacuum dust collector to minimize risk of health hazard from powder caused by friction.**

Special Service Tools

Tool number Tool name	Description	
GG94310000 Flare nut torque wrench	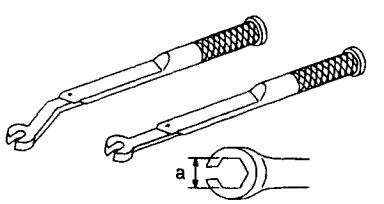 NT406	Removing and installing each brake piping **a: 10 mm (0.39 in)** **: 16.2 N·m (1.65 kg-m, 11.9 ft-lb)**

Commercial Service Tools

Tool name	Description	
① Flare nut crows foot ② Torque wrench	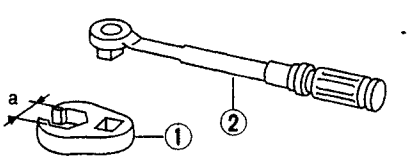 NT360	Removing and installing each brake piping **a: 10 mm (0.39 in)**
Brake fluid pressure gauge	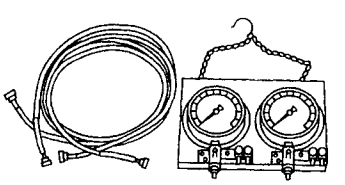 NT151	Measuring brake fluid pressure

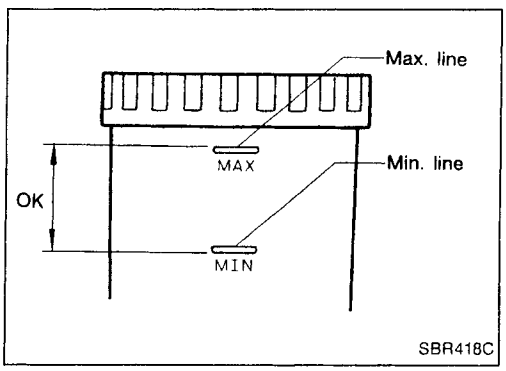

Checking Brake Fluid Level

- Check fluid level in reservoir tank. It should be between Max. and Min. lines on reservoir tank.
- If fluid level is extremely low, check brake system for leaks.
- If brake warning lamp comes on, check brake fluid level switch and parking brake switch.

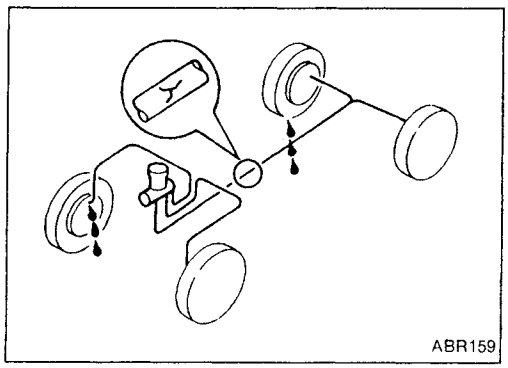

Checking Brake Line

CAUTION:

If leakage occurs around joints, retighten or, if necessary, replace damaged parts.

1. Check brake lines (tubes and hoses) for cracks, deterioration or other damage. Replace any damaged parts.
2. Check for oil leakage by fully depressing brake pedal while engine is running.

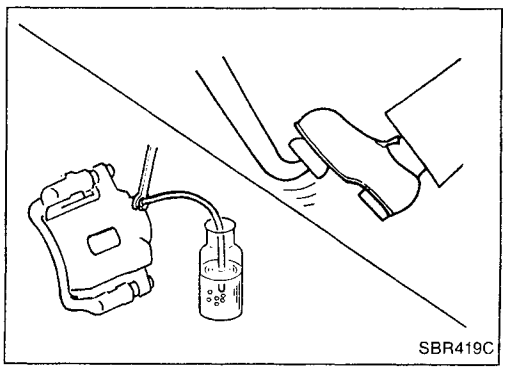

Changing Brake Fluid

CAUTION:

- **Refill with new brake fluid "DOT 3" or "DOT 4".**
- **Always keep fluid level higher than minimum line on reservoir tank.**
- **Never reuse drained brake fluid.**
- **Do not mix different types of brake fluids (DOT 3, DOT 4).**
- **Be careful not to splash brake fluid on painted areas; it may cause paint damage. If brake fluid is splashed on painted areas, wash it away with water immediately.**

1. Clean inside of reservoir tank, and refill with new brake fluid.
2. Connect a vinyl tube to each air bleeder valve.
3. Drain brake fluid from each air bleeder valve by depressing brake pedal.
4. Refill until new brake fluid comes out of each air bleeder valve.
   Use same procedure as in bleeding hydraulic system to refill brake fluid.
   Refer to "Bleeding Procedure", BR-6.

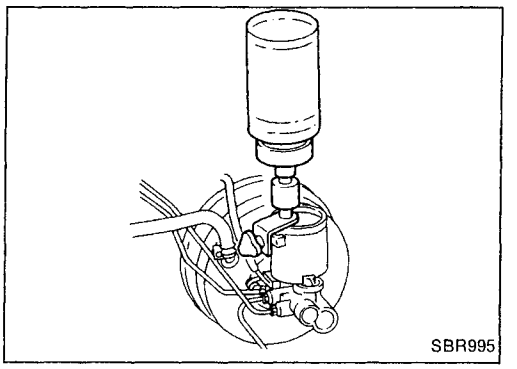
SBR995

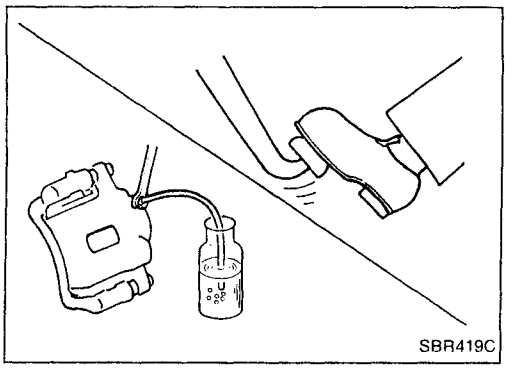
SBR419C

Bleeding Procedure

CAUTION:

- **Carefully monitor brake fluid level at master cylinder during bleeding operation.**
- **If master cylinder is suspected to have air inside, bleed air from master cylinder first. Refer to "Installation", "MASTER CYLINDER", BR-12.**
- **Fill reservoir with new brake fluid "DOT 3" or "DOT 4". Make sure it is full at all times while bleeding air out of system.**
- **Do not mix different types of brake fluids (DOT 3, DOT 4).**
- **Place a container under master cylinder to avoid spillage of brake fluid.**
- **For models with ABS, turn ignition switch OFF and disconnect ABS actuator connector or battery cable.**
- Bleed air in the following order:

  RHD models

  Left rear brake→Right front brake→Right rear brake→Left front brake

  LHD models

  Right rear brake→Left front brake→Left rear brake→Right front brake.

1. Connect a transparent vinyl tube to air bleeder valve.
2. Fully depress brake pedal several times.
3. With brake pedal depressed, open air bleeder valve to release air.
4. Close air bleeder valve.
5. Release brake pedal slowly.
6. Repeat steps 2. through 5. until clear brake fluid comes out of air bleeder valve.
7. Tighten air bleeder valve.

   : 7 - 9 N·m (0.7 - 0.9 kg-m, 61 - 78 in-lb)

Without anti-lock brake system
(Models with dual proportioning valve built into master cylinder)
(built-in type)

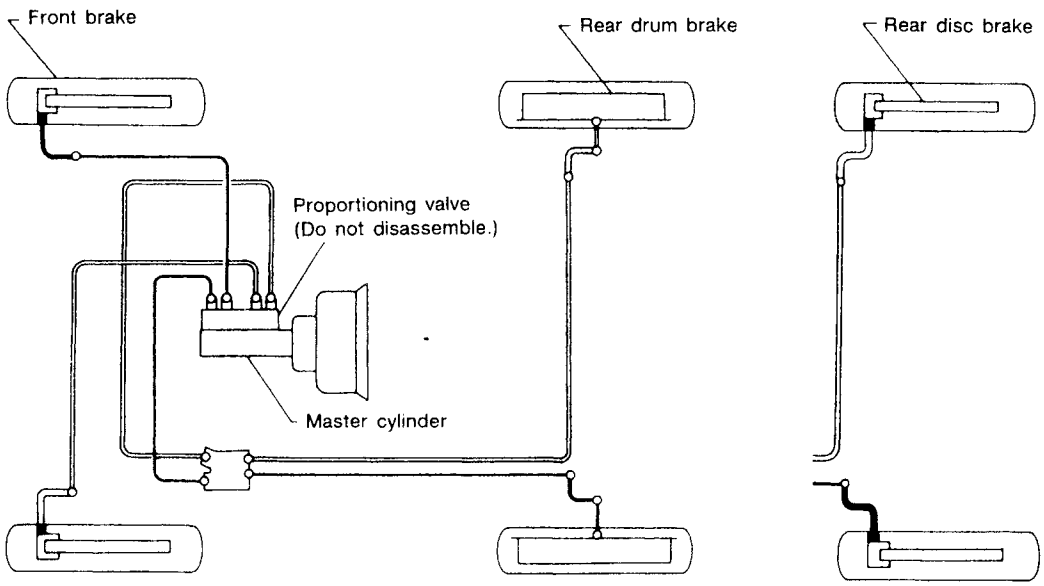

With anti-lock brake system

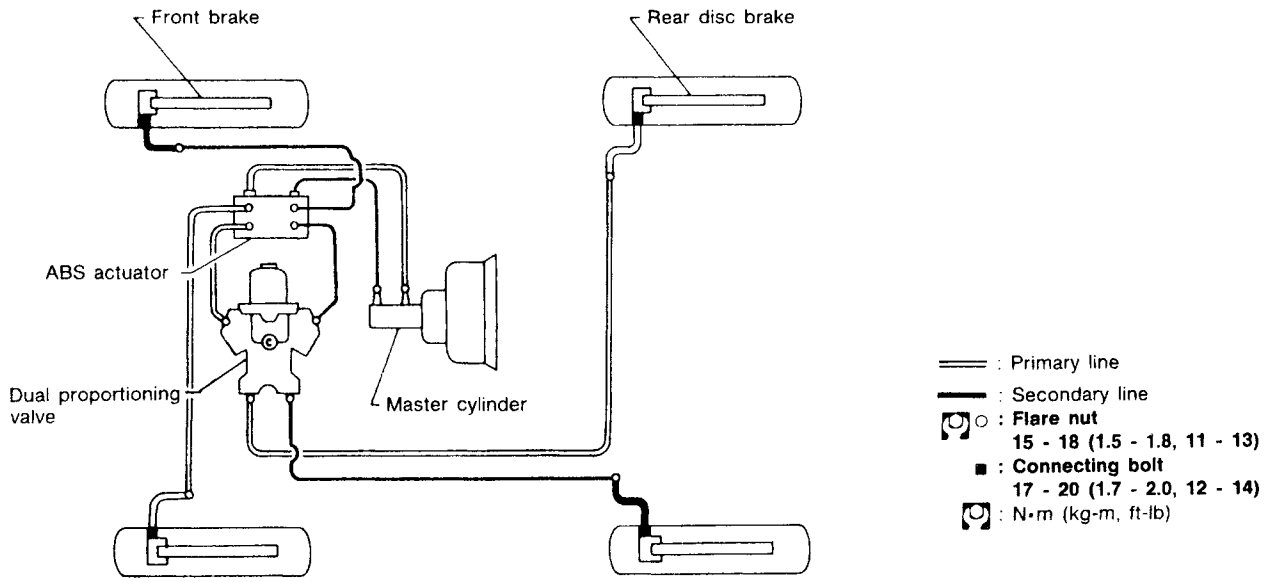

SBR086D

BR

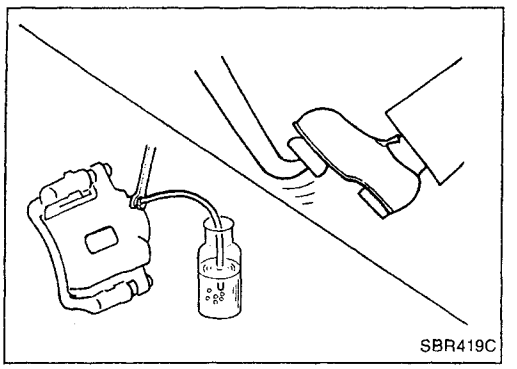

Removal

CAUTION:

- **Be careful not to splash brake fluid on painted areas; it may cause paint damage. If brake fluid is splashed on painted areas, wash it away with water immediately.**
- **All hoses must be free from excessive bending, twisting and pulling.**

1. Connect a vinyl tube to air bleeder valve.
2. Drain brake fluid from each air bleeder valve by depressing brake pedal.
3. Remove flare nut securing brake tube to hose, then withdraw lock spring.
4. Cover openings to prevent entrance of dirt whenever disconnecting hydraulic line.

Inspection

Check brake lines (tubes and hoses) for cracks, deterioration or other damage. Replace any damaged parts.

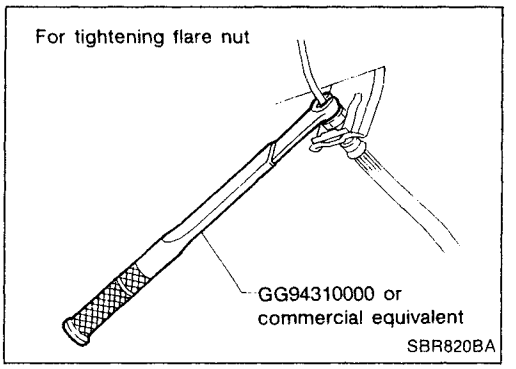

Installation

CAUTION:

- **Refill with new brake fluid "DOT 3" or "DOT 4".**
- **Never reuse drained brake fluid.**
- **Do not mix different types of brake fluids (DOT 3, DOT 4).**

1. Tighten all flare nuts and connecting bolts.
   Flare nut:
   : 15 - 18 N·m (1.5 - 1.8 kg-m, 11 - 13 ft-lb)
   Connecting bolt:
   : 17 - 20 N·m (1.7 - 2.0 kg-m, 12 - 14 ft-lb)
2. Refill until new brake fluid comes out of each air bleeder valve.
3. Bleed air. Refer to "Bleeding Procedure", BR-6.

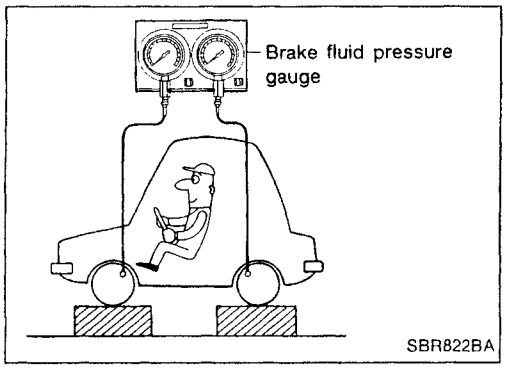

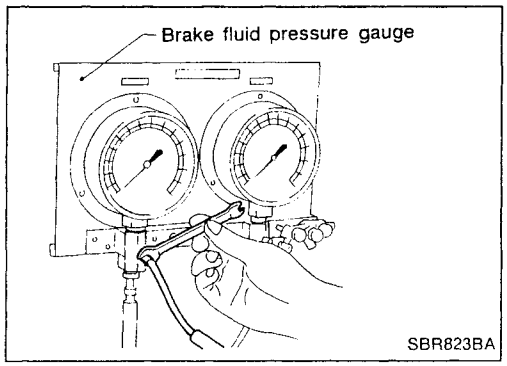

Proportioning Valve

INSPECTION

CAUTION:

- **Carefully monitor brake fluid level at master cylinder.**
- **Use new brake fluid "DOT 3" or "DOT 4".**
- **Do not mix different types of brake fluids (DOT 3, DOT 4).**
- **Be careful not to splash brake fluid on painted areas; it may cause paint damage. If brake fluid is splashed on paint areas, wash it away with water immediately.**
- **Depress pedal slowly when raising front brake pressure.**
- **Check rear brake pressure 2 seconds after front brake pressure reaches specified value.**
- **For models with ABS disconnect harness connectors from ABS actuator relay before checking.**

1. Connect Tool to air bleeders of front and rear brakes on either LH or RH side.
2. Bleed air from the Tool.
3. Check rear brake pressure by depressing brake pedal (increasing front brake pressure).

Unit: kPa (bar, kg/cm^2, psi)

Applied models	Without ABS	With ABS	
	GA14DE, GA16DE, CD20	GA16DE*	SR20DE
Applied pressure (Front brake)	7,355 (73.6, 75, 1,067)	6,375 (63.7, 65, 924)	5,394 (53.9, 55, 782)
Output pressure (Rear brake)	5,100 - 5,492 (51.0 - 54.9, 52 - 56, 739 - 796)	3,432 - 3,825 (34.3 - 38.2, 35 - 39, 498 - 555)	2,452 - 2,844 (24.5 - 28.4, 25 - 29, 356 - 412)

* Models for Australia

If output pressure is out of specifications, replace dual proportioning valve (separated type) or master cylinder assembly (built-in type).

4. Bleed air after disconnecting the Tool. Refer to "Bleeding Procedure", BR-6.

Proportioning Valve (Cont'd)

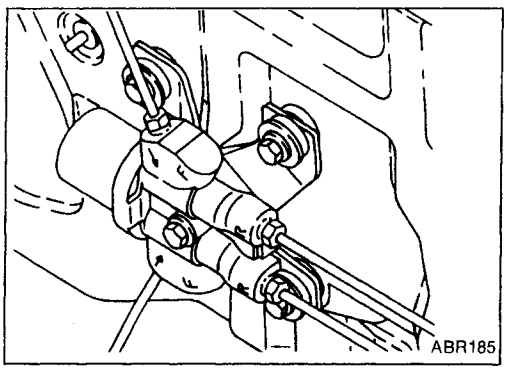

REMOVAL (Separated type)

CAUTION:

- **Be careful not to splash brake fluid on painted areas; it may cause paint damage. If brake fluid is splashed on painted areas, wash it away with water immediately.**
- **All hoses must be free from excessive bending, twisting and pulling.**

1. Connect a vinyl tube to air bleeder valve.
2. Drain brake fluid from each air bleeder valve by depressing brake pedal.
3. Loosen flare nut.
4. Remove proportioning valve mounting bolt, then remove flare nut.

INSTALLATION (Separated type)

CAUTION:

- **Refill with new brake fluid "DOT 3" or "DOT 4".**
- **Never reuse drained brake fluid.**
- **Do not mix different types of brake fluids (DOT 3, DOT 4).**

1. Temporarily fit flare nut to proportioning valve.
2. Tighten proportioning valve mounting bolt, then tighten flare nut with wooden block placed between proportioning valve and dash panel.
   Flare nut:
   : 15 - 18 N·m (1.5 - 1.8 kg-m, 11 - 13 ft-lb)
   Mounting bolt:
   : 5.1 - 8.8 N·m (0.52 - 0.9 kg-m, 45.1 - 78.1 in-lb)
3. Refill until new brake fluid comes out of each air bleeder valve.
4. Bleed air. Refer to "Bleeding Procedure", BR-6.

REMOVAL AND INSTALLATION (Built-in type)

Always replace together with master cylinder as an assembly.

- Refer to "MASTER CYLINDER", BR-12.

Removal and Installation

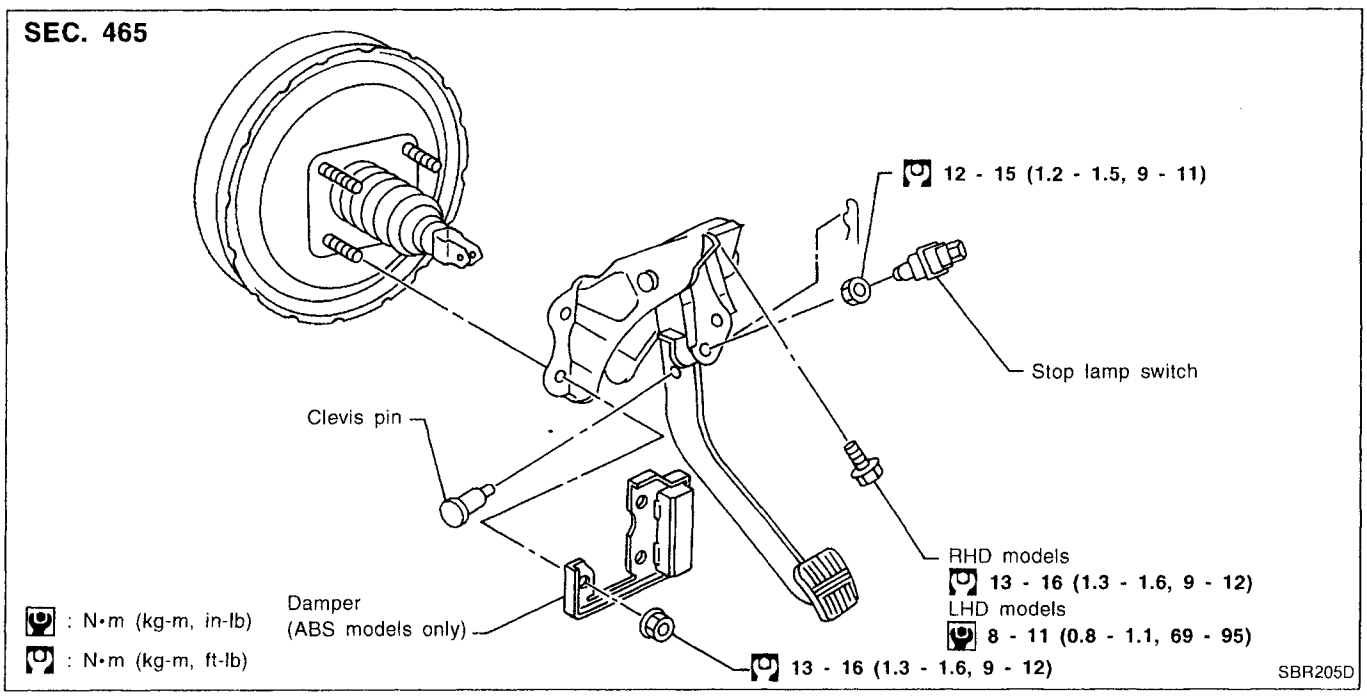

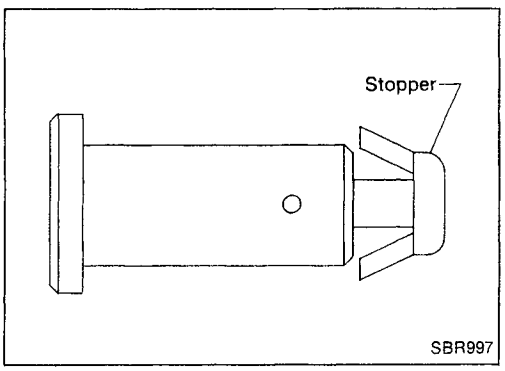

Inspection

Check brake pedal for following items:

- Brake pedal bend
- Clevis pin deformation
- Crack of any welded portion
- Crack or deformation of clevis pin stopper

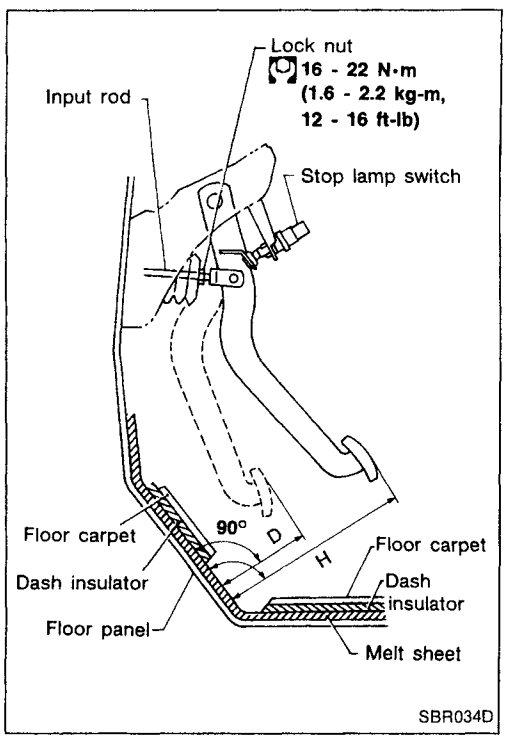

Adjustment

Check brake pedal free height from dash reinforcement panel (RHD) and dash lower panel (LHD). Adjust if necessary.

H: Free height
Refer to SDS (BR-88).

D: Depressed height
Refer to SDS (BR-88).
Under force of 490 N (50 kg, 110 lb) with engine running

1. Loosen lock nut and adjust pedal free height by turning brake booster input rod. Then tighten lock nut.
2. Check pedal free play.

Make sure that stop lamps go off when pedal is released.

3. Check brake pedal's depressed height while engine is running.
   If lower than specification, check for leaks, air in system or damage to components (master cylinder, wheel cylinder, etc.). Then make necessary repairs.

BR

Removal

CAUTION:

- **Be careful not to splash brake fluid on painted areas; it may cause paint damage. If brake fluid is splashed on painted areas, wash it away with water immediately.**
- **In the case of brake fluid leakage from the master cylinder, disassemble the cylinder. Then check piston cups for deformation or scratches and replace necessary parts.**

1. Connect a vinyl tube to air bleeder valve.
2. Drain brake fluid from each air bleeder valve, depressing brake pedal to empty fluid from master cylinder.
3. Remove brake pipe flare nuts.
4. Remove master cylinder mounting nuts.

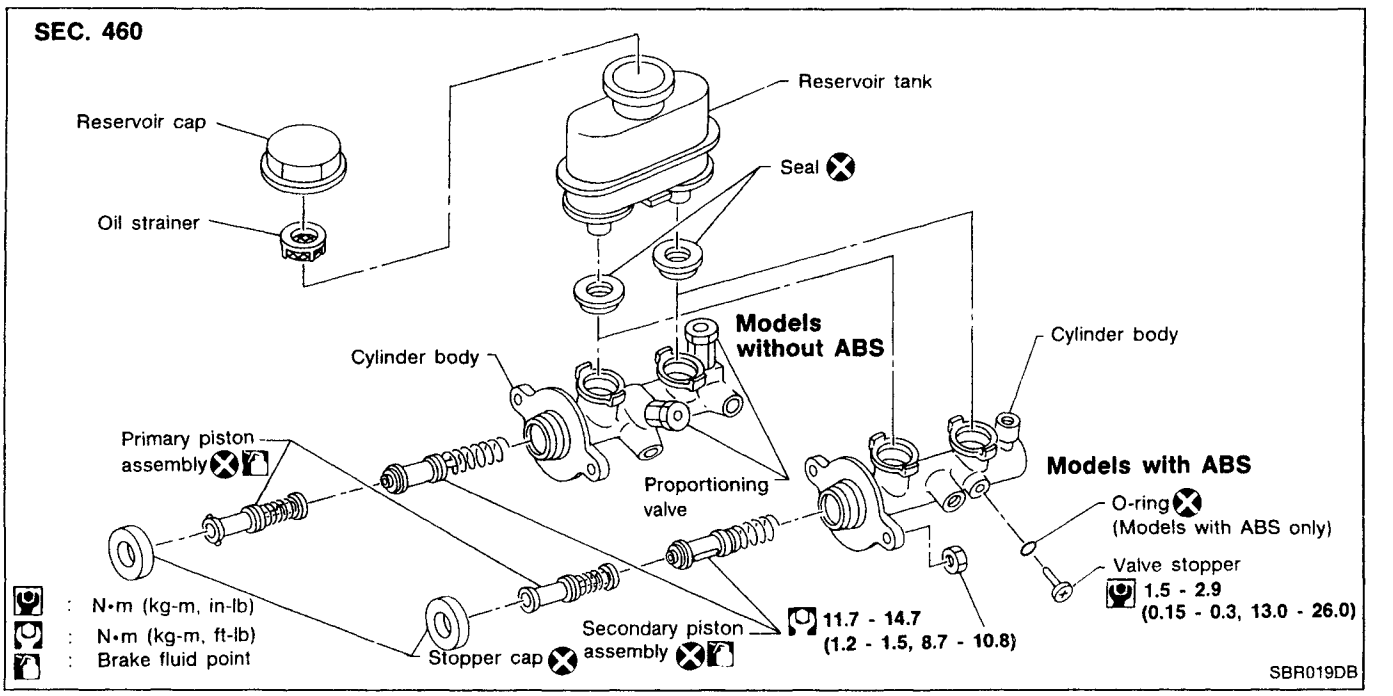

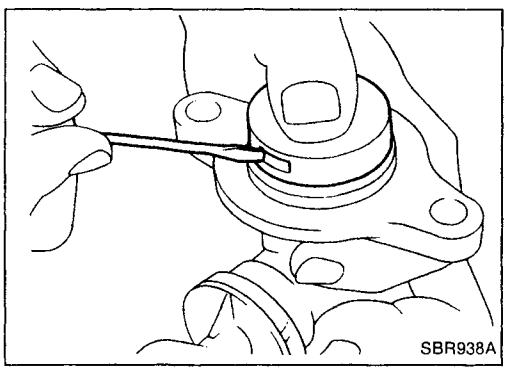

Disassembly

1. Bend claws of stopper cap outward.

Disassembly (Cont'd)

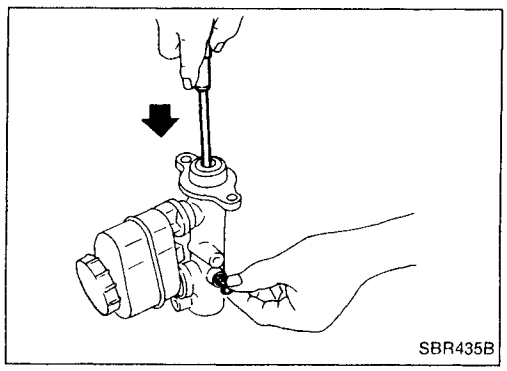
SBR435B

2. Remove valve stopper while piston is pushed into cylinder (Models with ABS only).

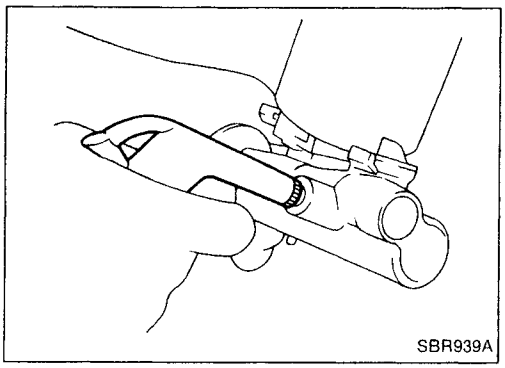
SBR939A

3. Remove piston assemblies.

If it is difficult to remove secondary piston assembly, gradually apply compressed air through fluid outlet.

4. Draw out reservoir tank.

Inspection

Check master cylinder inner wall for pin holes or scratches. Replace if damaged.

BR

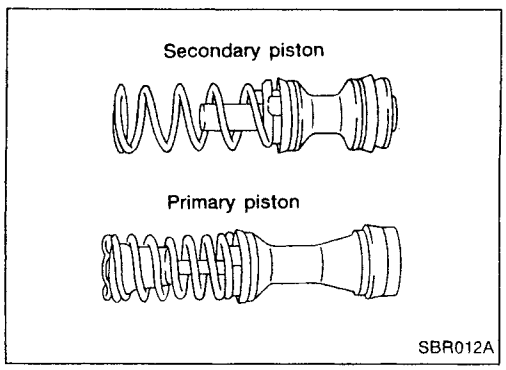

SBR012A

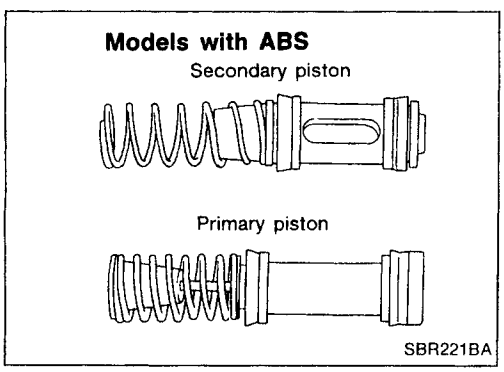

SBR221BA

Assembly

1. Insert secondary piston assembly. Then insert primary piston assembly.

- **Pay attention to direction of piston cups in figure at left. Also, insert pistons squarely to avoid scratches on cylinder bore.**
- **Pay attention to alignment of secondary piston slit with valve stopper mounting hole of cylinder body (For models with ABS only).**

Assembly (Cont'd)

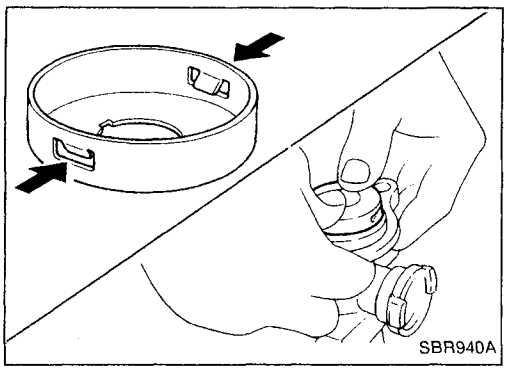

2. Install stopper cap.

Before installing stopper cap, ensure that claws are bent inward.

3. Push reservoir tank seals into cylinder body.
4. Push reservoir tank into cylinder body.

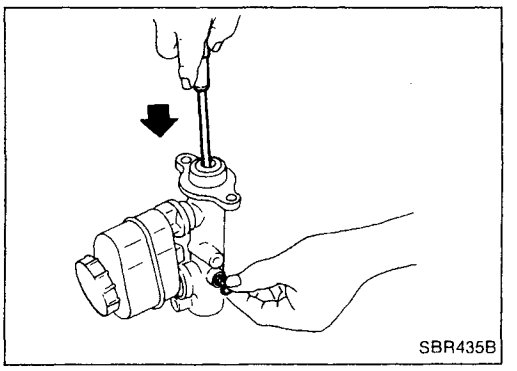

5. Install valve stopper while piston is pushed into cylinder (Models with ABS only).

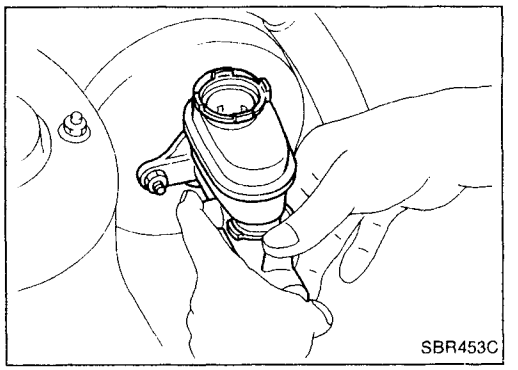

Installation

CAUTION:

- **Refill with new brake fluid "DOT 3" or "DOT 4".**
- **Never reuse drained brake fluid.**
- **Do not mix different types of brake fluids (DOT 3, DOT 4).**

1. Place master cylinder onto brake booster and secure mounting nuts lightly.
2. Torque mounting nuts.
   : 11.7 - 14.7 N·m (1.2 - 1.5 kg-m, 8.7 - 10.8 ft-lb)
3. Fill up reservoir tank with new brake fluid.
4. Plug all ports on master cylinder with fingers to prevent air suction while releasing brake pedal.
5. Have driver depress brake pedal slowly several times until no air comes out of master cylinder.
6. Fit brake lines to master cylinder.
7. Tighten flare nuts.
   : 15 - 18 N·m (1.5 - 1.8 kg-m, 11 - 13 ft-lb)
8. Bleed air from brake system. Refer to "Bleeding Procedure", BR-6.

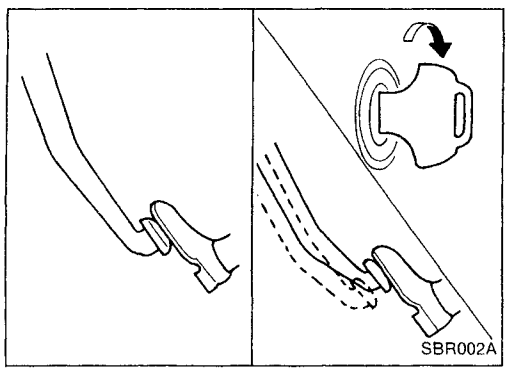

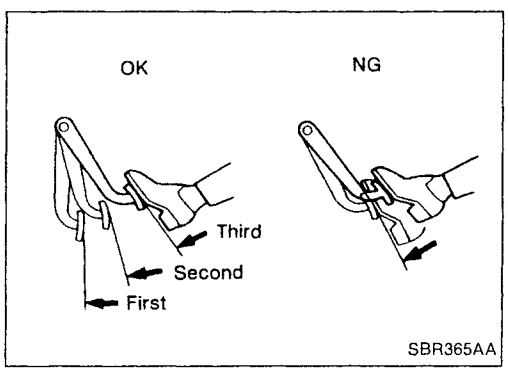

On-vehicle Service

OPERATING CHECK

- Depress brake pedal several times with engine off. After exhausting vacuum, make sure there is no change in pedal stroke.
- Depress brake pedal, then start engine. If pedal goes down slightly, operation is normal.

AIRTIGHT CHECK

- Start engine, and stop it after one or two minutes. Depress brake pedal several times slowly. Booster is airtight if pedal stroke is less each time.
- Depress brake pedal while engine is running, and stop engine with pedal depressed. The pedal stroke should not change after holding pedal down for **30 seconds**.

Removal

CAUTION:

- **Be careful not to splash brake fluid on painted areas; it may cause paint damage. If brake fluid is splashed on painted areas, wash it away with water immediately.**
- **Be careful not to deform or bend brake pipes, during removal of booster.**

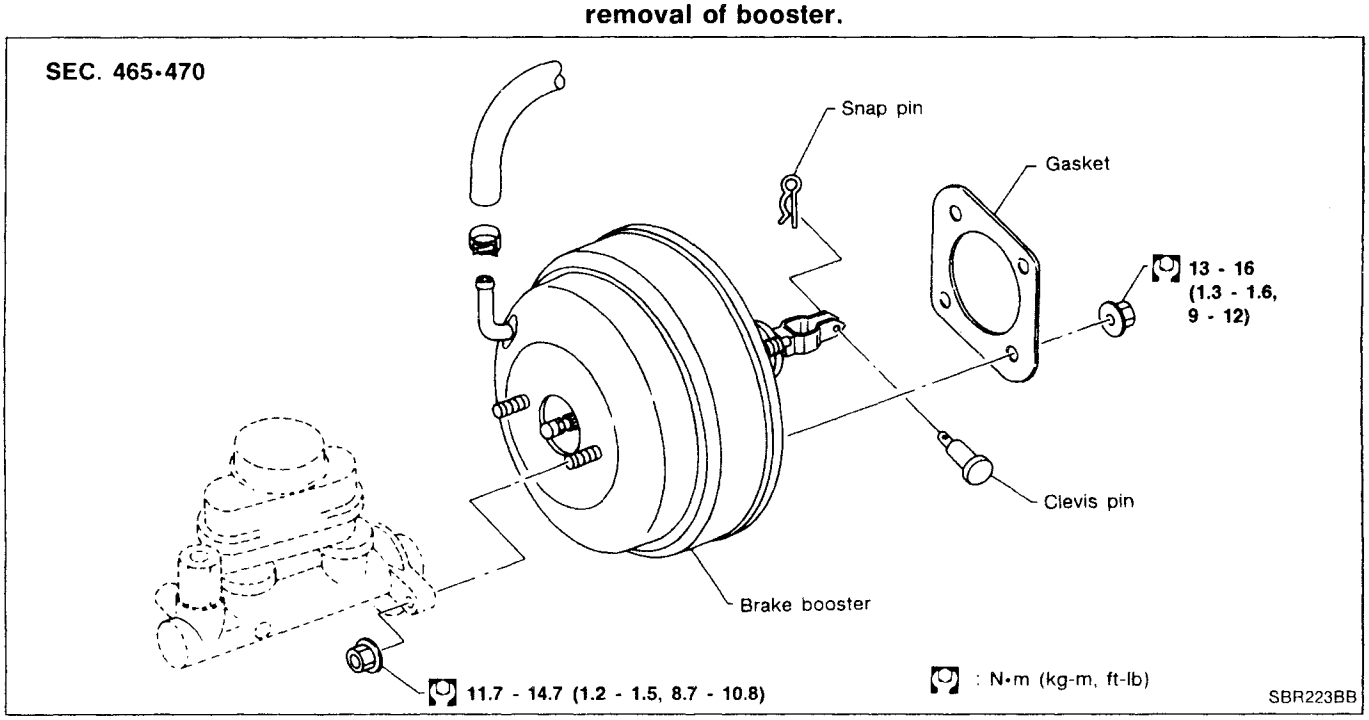

BR

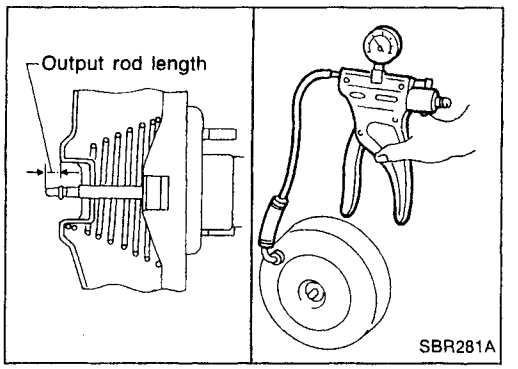

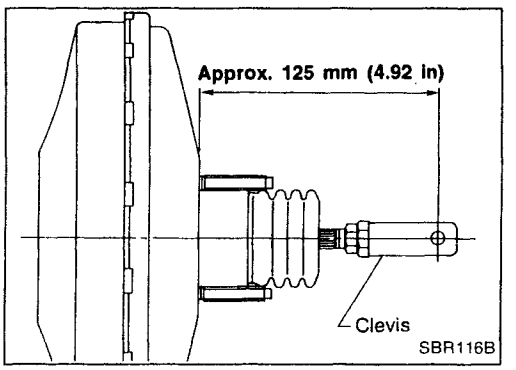

Inspection

OUTPUT ROD LENGTH CHECK

1. Supply brake booster with vacuum of –66.7 kPa (–667 mbar, –500 mmHg, –19.69 inHg) using a hand vacuum pump.
2. Check output rod length.
   Specified length:
   M195, S205 or C205
   10.275 - 10.525 mm (0.4045 - 0.4144 in)

Installation

CAUTION:

- **Be careful not to deform or bend brake pipes during installation of booster.**
- **Replace clevis pin if damaged.**
- **Refill with new brake fluid "DOT 3" or "DOT 4".**
- **Never reuse drained brake fluid.**
- **Do not mix different types of brake fluids (DOT 3, DOT 4).**
- **Due to the angle of installation, thread can be damaged by the dash panel.**

1. Before fitting booster, temporarily adjust clevis to dimension shown. (Does not apply to vehicles fitted with ABS.)
2. Fit booster, then secure mounting nuts (brake pedal bracket to booster) lightly.
3. Connect brake pedal and booster input rod with clevis pin.
4. Secure mounting nuts.
   Specification:
   [O]: 13 - 16 N·m (1.3 - 1.6 kg-m, 9 - 12 ft-lb)
5. Install master cylinder. Refer to BR-12.
6. Bleed air. Refer to "Bleeding Procedure", BR-6.

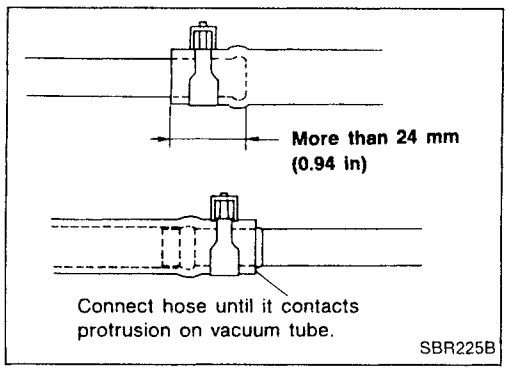

Removal and Installation

CAUTION:

When installing vacuum hoses, pay attention to the following points.

- **Do not apply any oil or lubricants to vacuum hose and check valve.**
- **Insert vacuum tube into vacuum hose as shown.**

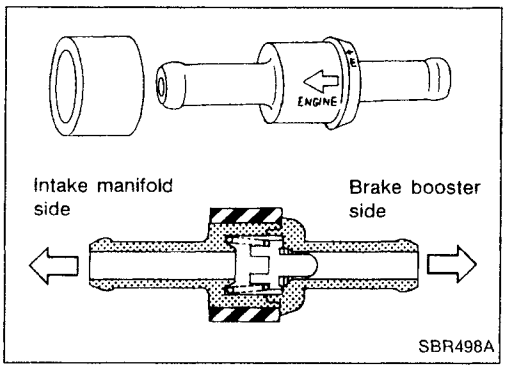

- **Install check valve, paying attention to its direction.**

TYPE 1

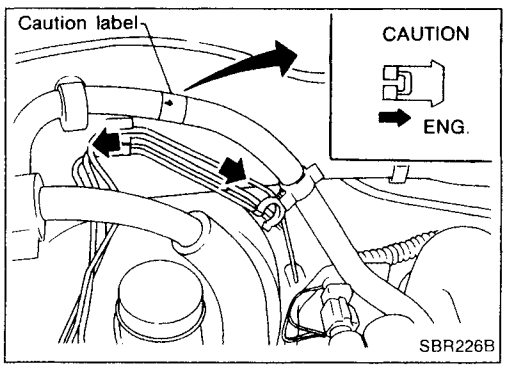

TYPE 2

BR

Inspection

HOSES AND CONNECTORS

Check vacuum lines, connections and check valve for airtightness, improper attachment, chafing and deterioration.

Inspection (Cont'd)

CHECK VALVE

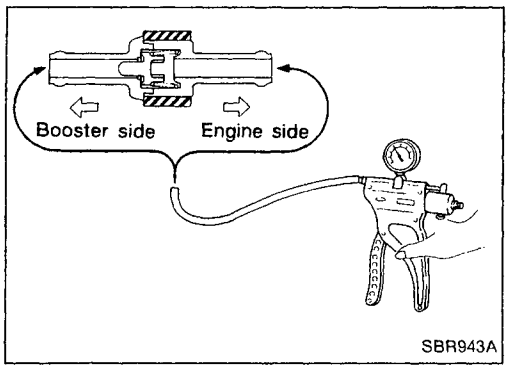

Check vacuum with a vacuum pump.

Connect to booster side	Vacuum should exist.
Connect to engine side	Vacuum should not exist.

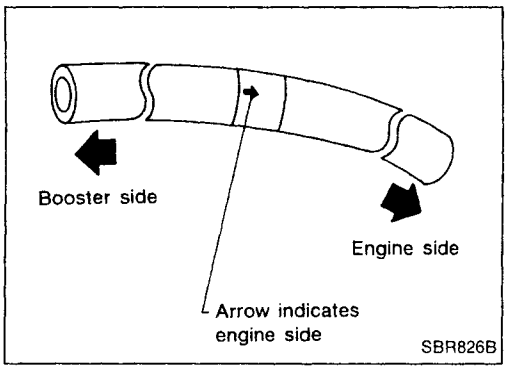

VACUUM WARNING SWITCH (Diesel engine models)

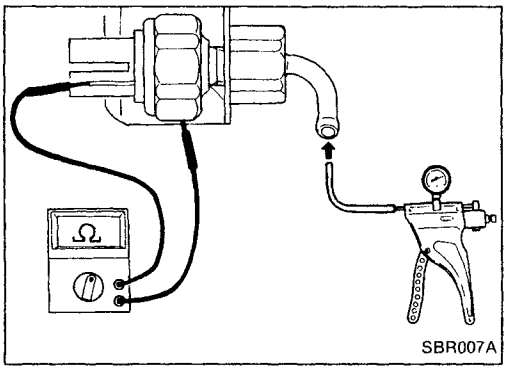

Test continuity through vacuum warning switch with an ohmmeter and vacuum pump.

Vacuum condition	Continuity
Less than 26.7 kPa (267 mbar, 200 mmHg, 7.87 inHg)	Yes
33.3 kPa (333 mbar, 250 mmHg, 9.84 inHg) or more	No

VACUUM PUMP

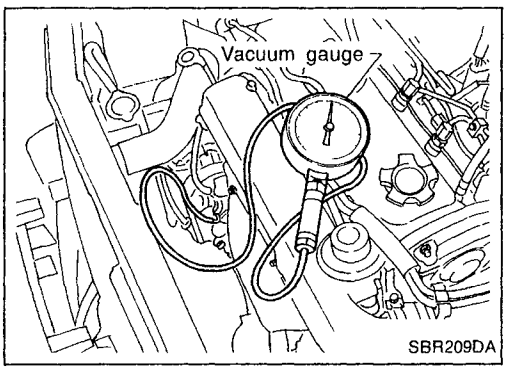

1. Install vacuum gauge.
2. Run engine at 1,000 rpm or more.
3. Check vacuum.

   Specified vacuum:

   86.6 kPa (866 mbar, 650 mmHg, 25.59 inHg) or more

Pad Replacement

WARNING:

Clean brake pads with a vacuum dust collector to minimize the hazard of airborne particles or other materials.

CAUTION:

- **When cylinder body is open, do not depress brake pedal or piston will pop out.**
- **Be careful not to damage piston boot or get oil on rotor. Always replace shims when replacing pads.**
- **If shims are rusted or show peeling of the rubber coat, replace them with new shims.**
- **It is not necessary to remove connecting bolt except for disassembly or replacement of caliper assembly. In this case, suspend cylinder body with wire so as not to stretch brake hose.**

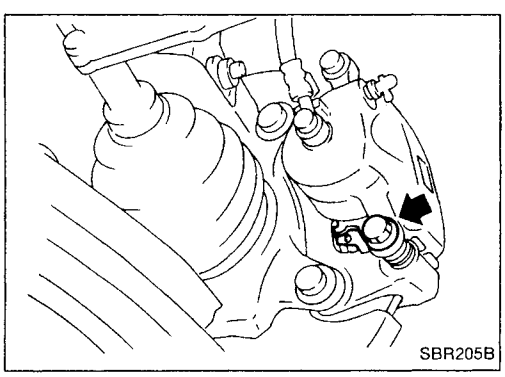

1. Remove master cylinder reservoir cap.
2. Remove lower pin bolt.

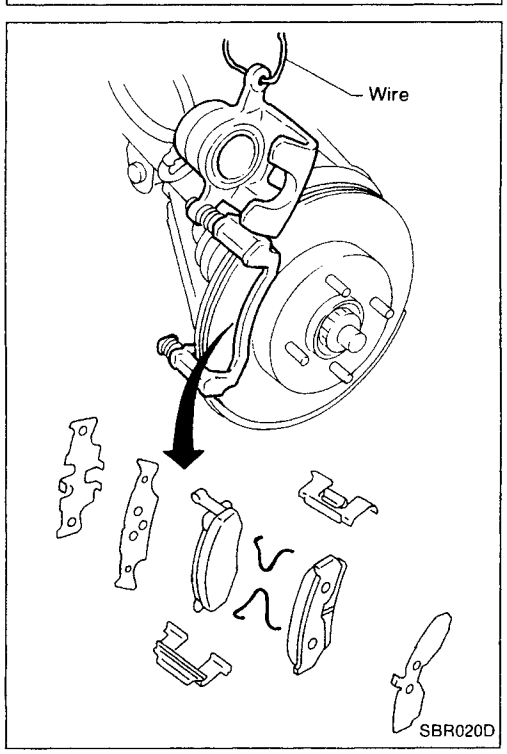

3. Open cylinder body upward. Then remove pad retainers, return spring (Except AD22VF brake model) and inner/outer shims.

   Standard pad thickness:

CL22VD and CL22VE	**11 mm (0.43 in)**
CL22VF	**10 mm (0.39 in)**

   Pad wear limit:

   2.0 mm (0.079 in)

Carefully monitor brake fluid level because brake fluid will return to reservoir when pushing back piston.

BR

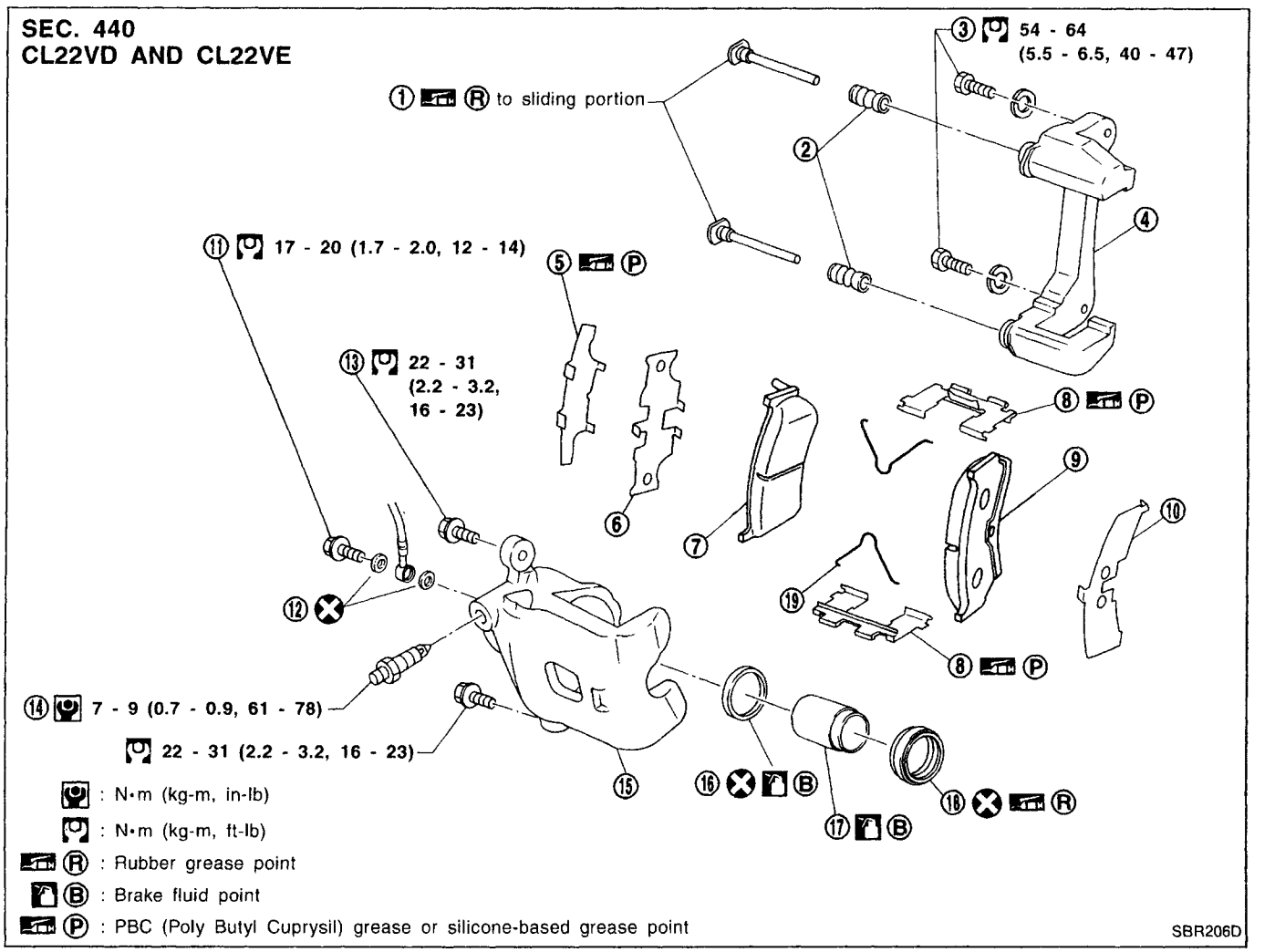

① Main pin
② Pin boot
③ Torque member fixing bolt
④ Torque member
⑤ Shim cover
⑥ Inner shim
⑦ Inner pad
⑧ Pad retainer
⑨ Outer pad
⑩ Outer shim
⑪ Connecting bolt
⑫ Copper washer
⑬ Main pin bolt
⑭ Bleed valve
⑮ Cylinder body
⑯ Piston seal
⑰ Piston
⑱ Piston boot
⑲ Pad return spring

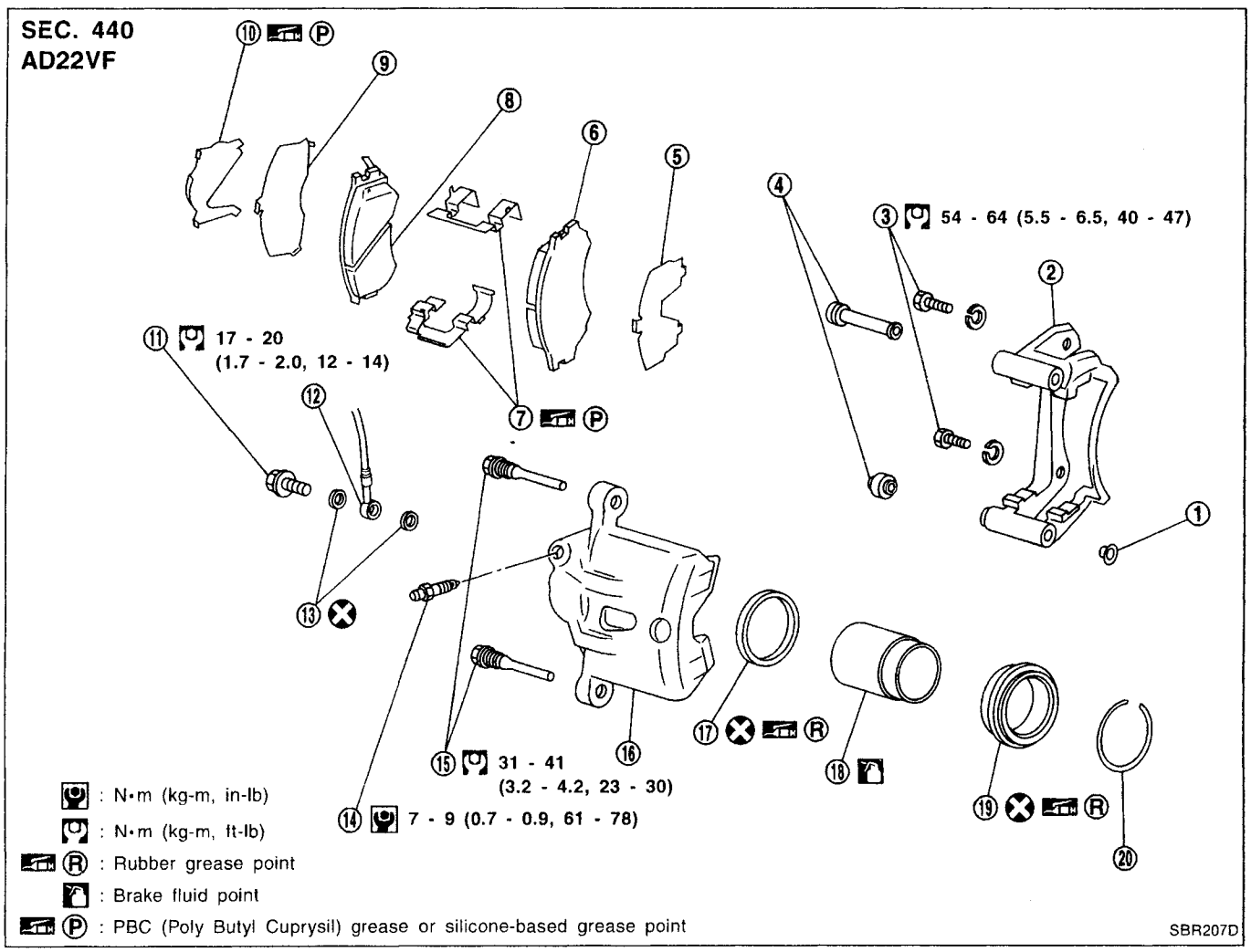

BR

① Plug
② Torque member
③ Torque member fixing bolt
④ Pin boot
⑤ Outer shim
⑥ Outer pad
⑦ Pad retainer
⑧ Inner pad
⑨ Inner shim
⑩ Shim cover
⑪ Connecting bolt
⑫ Brake hose
⑬ Copper washer
⑭ Air bleeder
⑮ Main pin bolt
⑯ Cylinder body
⑰ Piston seal
⑱ Piston
⑲ Piston boot
⑳ Piston boot retainer

Removal

WARNING:
Clean brake pads with a vacuum dust collector to minimize the hazard of airborne asbestos or other materials.
CAUTION:
Suspend caliper assembly with wire so as not to stretch brake hose.

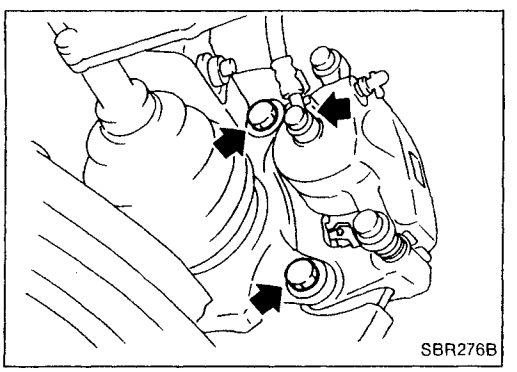

Remove torque member fixing bolts and connecting bolt.
It is not necessary to remove connecting bolt except for disassembly or replacement of caliper assembly. In this case, suspend caliper assembly with wire so as not to stretch brake hose.

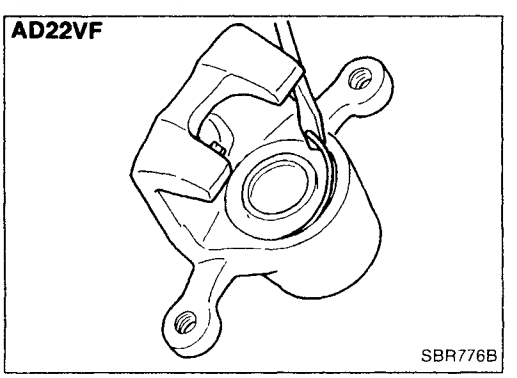

Disassembly

1. Remove piston boot retainer with a screwdriver.

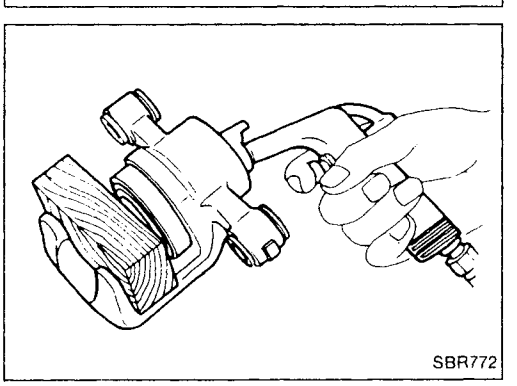

WARNING:
Do not place your fingers in front of piston.
CAUTION:
Do not scratch or score cylinder wall.

2. Push out piston with dust seal with compressed air.
3. Remove piston seal with a suitable tool.

Inspection — Caliper

CYLINDER BODY

- Check inside surface of cylinder for score, rust, wear, damage or presence of foreign objects. If any of the above conditions are observed, replace cylinder body.
- Minor damage from rust or foreign objects may be eliminated by polishing surface with a fine emery paper. Replace cylinder body if necessary.

CAUTION:
Use brake fluid to clean. Never use mineral oil.

Inspection — Caliper (Cont'd)

PISTON

Check piston for score, rust, wear, damage or presence of foreign objects. Replace if any of the above conditions are observed.

CAUTION:

Piston sliding surface is plated. Do not polish with emery paper even if rust or foreign objects are stuck to sliding surface.

SLIDE PIN, PIN BOLT AND PIN BOOT

Check for wear, cracks, rust or other damage. Replace if any of the above conditions are observed.

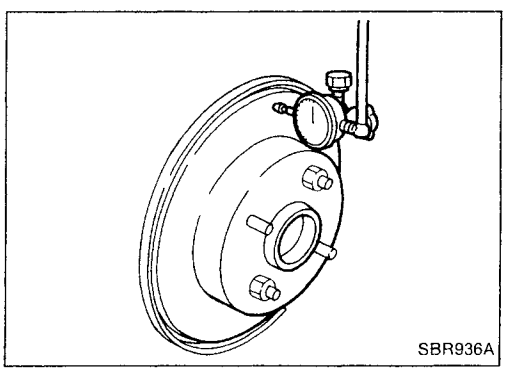

Inspection — Rotor

RUNOUT

1. Secure rotor to wheel hub with at least two nuts (M12 × 1.25).
2. Check runout using a dial indicator.

Make sure that wheel bearing axial end play is within the specifications before measuring. Refer to FA section ("Front Wheel Bearing", "ON-VEHICLE SERVICE").

Maximum runout:
0.07 mm (0.0028 in)

3. If the runout is out of specification, find minimum runout position as follows:
   a. Remove nuts and rotor from wheel hub.
   b. Shift the rotor one hole and secure rotor to wheel hub with nuts.
   c. Measure runout.
   d. Repeat steps a. to c. so that minimum runout position can be found.
4. If the runout is still out of specification, turn rotor with on-car brake lathe ("MAD, DL-8700", "AMMCO 700 and 705" or equivalent).

BR

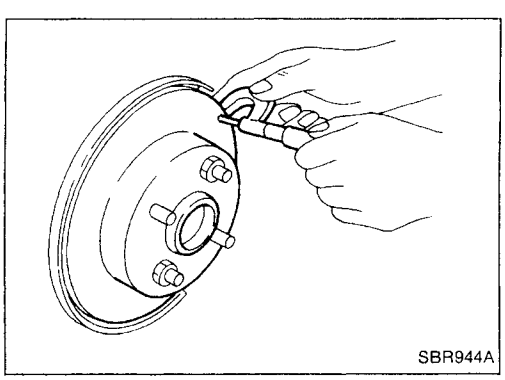

THICKNESS

Thickness variation (At least 8 positions):
Maximum 0.02 mm (0.0008 in)

If thickness variation exceeds the specification, turn rotor with on-car brake lathe.

Rotor repair limit:

CL22VD and CL22VE	**16.0 mm (0.630 in)**
CL22VF	**24.0 mm (0.945 in)**

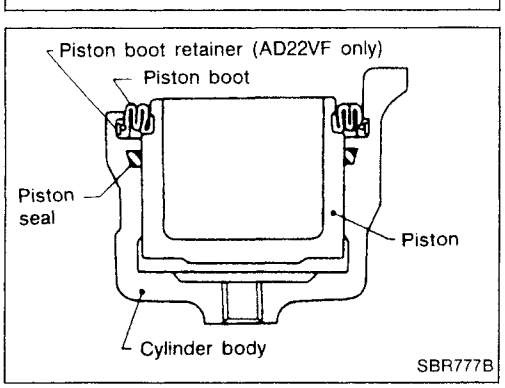

Assembly

1. With piston boot fitted to piston, insert piston boot into groove on cylinder body and install piston.
2. Properly secure piston boot.
3. Secure piston boot with retainer. (AD22VF model only)

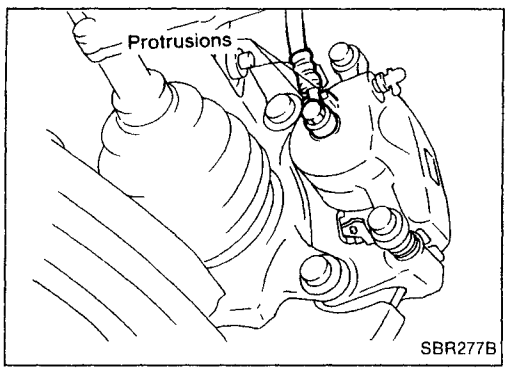

Installation

CAUTION:

- **Refill with new brake fluid "DOT 3" or "DOT 4".**
- **Never reuse drained brake fluid.**
- **Do not mix different types of brake fluids (DOT 3, DOT 4).**

1. Install caliper assembly.
2. Install brake hose to caliper securely.
3. Install all parts and secure all bolts.
4. Bleed air. Refer to "Bleeding Procedure", BR-6.

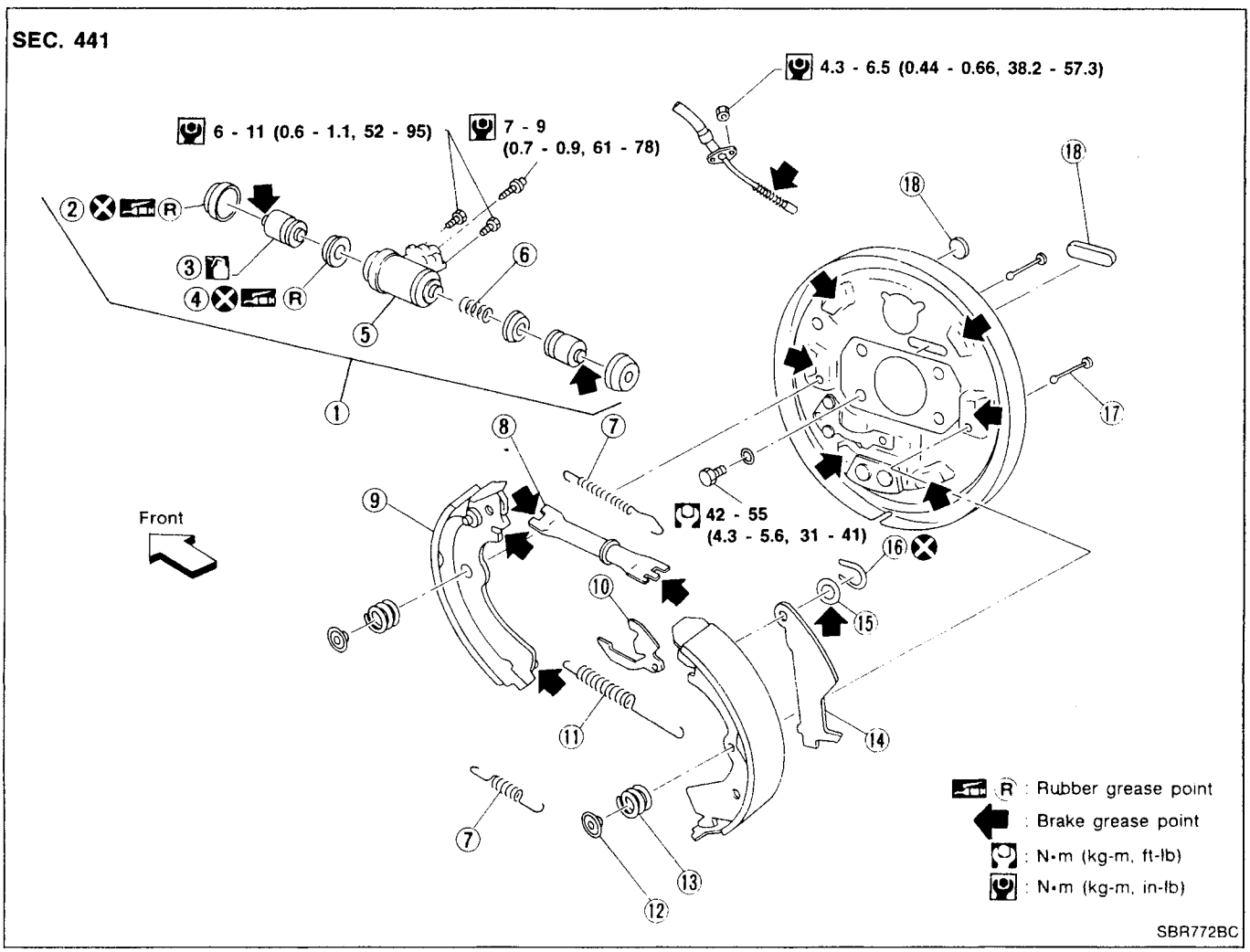

BR

①	Wheel cylinder assembly	⑦	Return spring	⑬	Shoe hold-down spring
②	Boot	⑧	Adjuster	⑭	Toggle lever
③	Piston	⑨	Shoe	⑮	Washer
④	Piston cup	⑩	Adjuster lever	⑯	Retainer ring
⑤	Cylinder body	⑪	Adjuster spring	⑰	Shoe hold-down pin
⑥	Spring	⑫	Retainer	⑱	Plug

Removal

WARNING:
Clean brake lining with a vacuum dust collector to minimize the hazard of airborne particles or other materials.
CAUTION:
Make sure parking brake lever is released completely.

Removal (Cont'd)

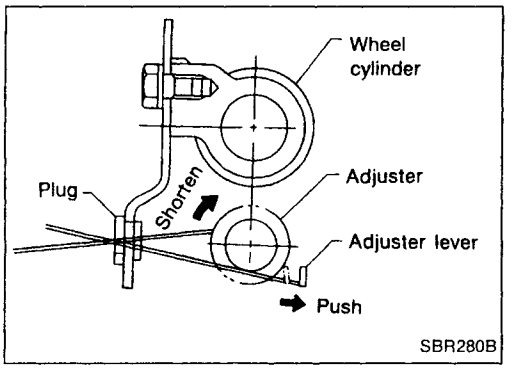

1. Release parking brake lever fully, then remove drum.

If drum is hard to remove, the following procedures should be carried out.

a. Remove plug. Then shorten adjuster to make clearance between brake shoe and drum as shown.

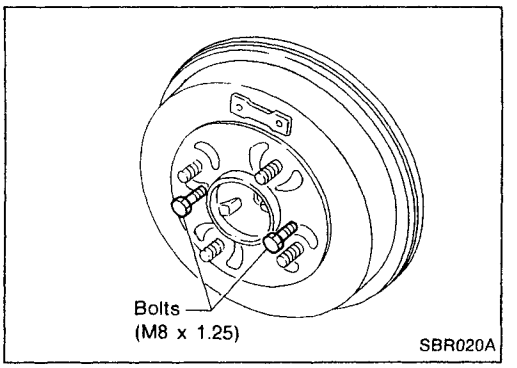

b. Tighten the two bolts gradually.

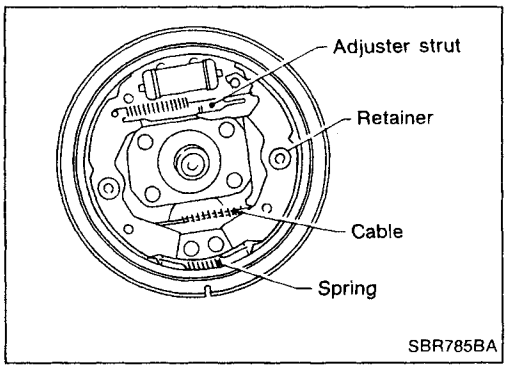

2. After removing retainer, remove spring by rotating shoes.
- **Be careful not to damage wheel cylinder piston boots.**
- **Be careful not to damage parking brake cable when separating it.**
3. Remove adjuster.
4. Disconnect parking brake cable from toggle lever.

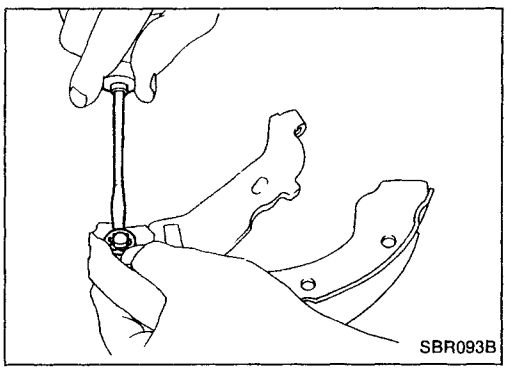

5. Remove retainer ring with a suitable tool. Then separate toggle lever and brake shoe.

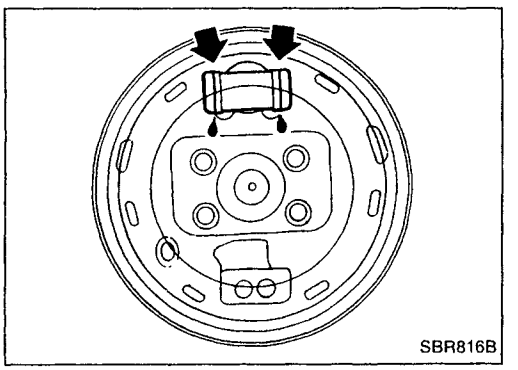

Inspection — Wheel Cylinder

- Check wheel cylinder for leakage.
- Check for wear, damage and loose conditions. Replace if any such condition exists.

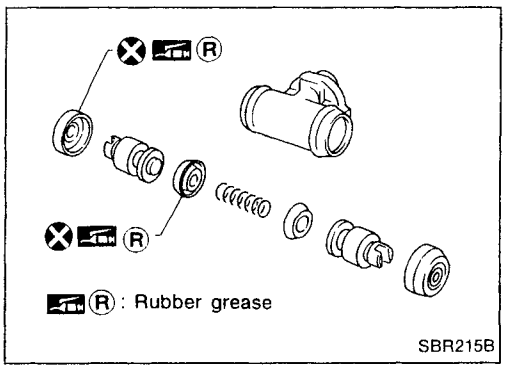

Wheel Cylinder Overhaul

- Check all internal parts for wear, rust and damage. Replace if necessary.
- Pay attention so as not to scratch cylinder when installing pistons.

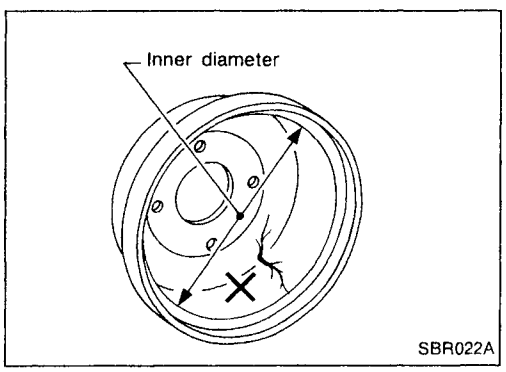

Inspection — Drum

Maximum inner diameter:
181 mm (7.13 in)

- **Out-of-roundness:**
  0.03 mm (0.0012 in) or less

- Contact surface should be fine finished with No. 120 to 150 emery paper.
- Using a drum lathe, lathe brake drum if it shows scoring, partial wear or stepped wear.
- After brake drum has been completely reconditioned or replaced, check drum and shoes for proper contact pattern.

BR

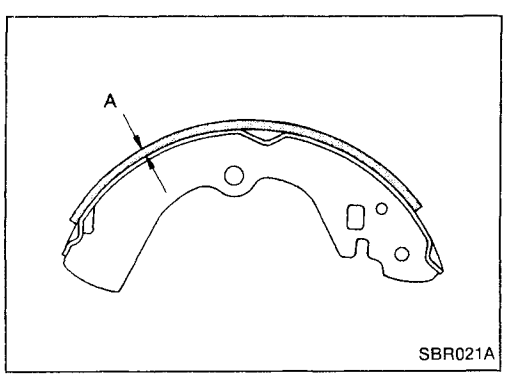

Inspection — Lining

Check lining thickness.

Standard lining thickness:
4.0 mm (0.157 in)
Lining wear limit (A):
1.5 mm (0.059 in)

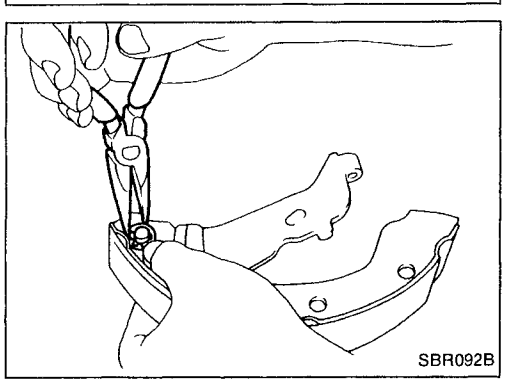

Installation

Always perform shoe clearance adjustment. Refer to "Adjustment" in "PARKING BRAKE CONTROL", BR-37.

1. Fit toggle lever to brake shoe with retainer ring.

Installation (Cont'd)

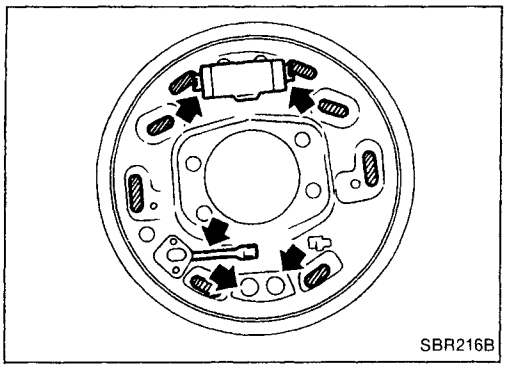

2. Apply brake grease to the contact areas shown at left.

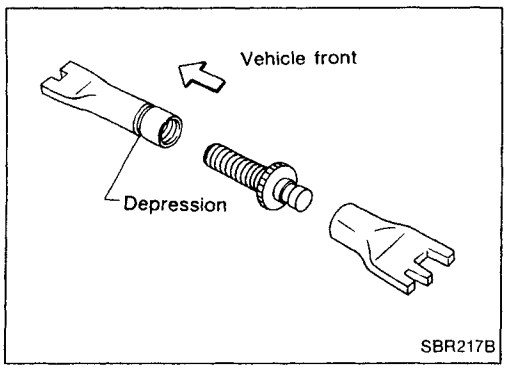

3. Shorten adjuster by rotating it.

- **Pay attention to direction of adjuster.**

Wheel	Screw	Depression
Left	Left-hand thread	Yes
Right	Right-hand thread	No

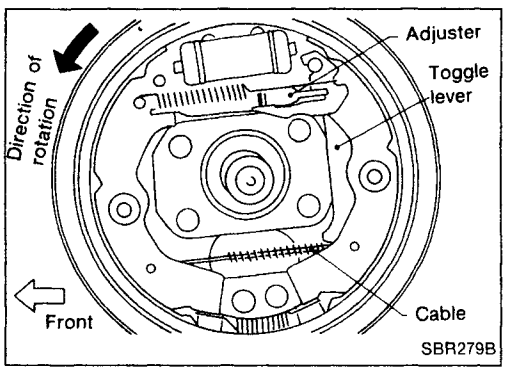

4. Connect parking brake cable to toggle lever.
5. Install all parts.

Be careful not to damage wheel cylinder piston boots.

6. Check all parts are installed properly.

Pay attention to direction of adjuster assembly.

7. Install brake drum.
8. When installing new wheel cylinder or overhauling wheel cylinder, bleed air. Refer to "Bleeding procedure", BR-6.
9. Adjust parking brake. Refer to BR-37.

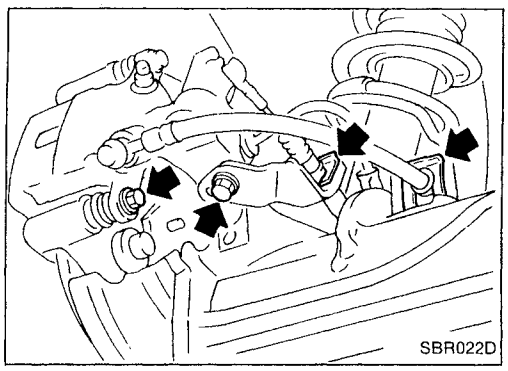
SBR022D

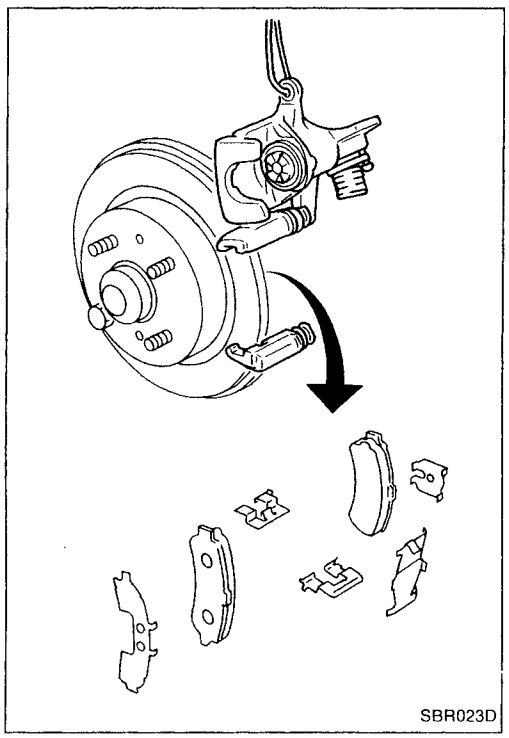
SBR023D

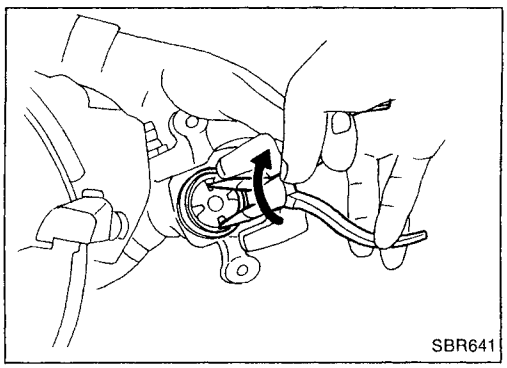
SBR641

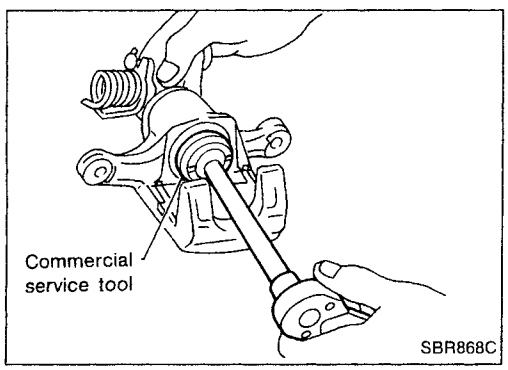

SBR868C

Pad Replacement

WARNING:

Clean brake pads with a vacuum dust collector to minimize the hazard of airborne particles or other materials.

CAUTION:

- **When cylinder body is open, do not depress brake pedal, otherwise piston will pop out.**
- **Be careful not to damage piston boot or get oil on rotor. Always replace shims when replacing pads.**
- **If shims are rusted or show peeling of rubber coat, replace them with new shims.**
- **It is not necessary to remove connecting bolt except for disassembly or replacement of caliper assembly. In this case, suspend cylinder body with wire so as not to stretch brake hose**
- **Carefully monitor brake fluid level because brake fluid will return to reservoir when pushing back piston.**

1. Remove master cylinder reservoir cap.
2. Remove brake cable lock spring.
3. Remove cable guide from caliper assembly.
4. Disconnect cable.
5. Remove lock spring from brake hose. Then remove brake hose from bracket.
6. Remove lower pin bolt.
7. Open cylinder body upward. Then remove pad retainers, and inner and outer shims.

   Standard pad thickness:
   10 mm (0.39 in)
   Pad wear limit:
   1.5 mm (0.059 in)

8. When installing new pads, push piston into cylinder body by turning piston clockwise.

Carefully monitor brake fluid level because brake fluid will return to reservoir when pushing back piston.

BR

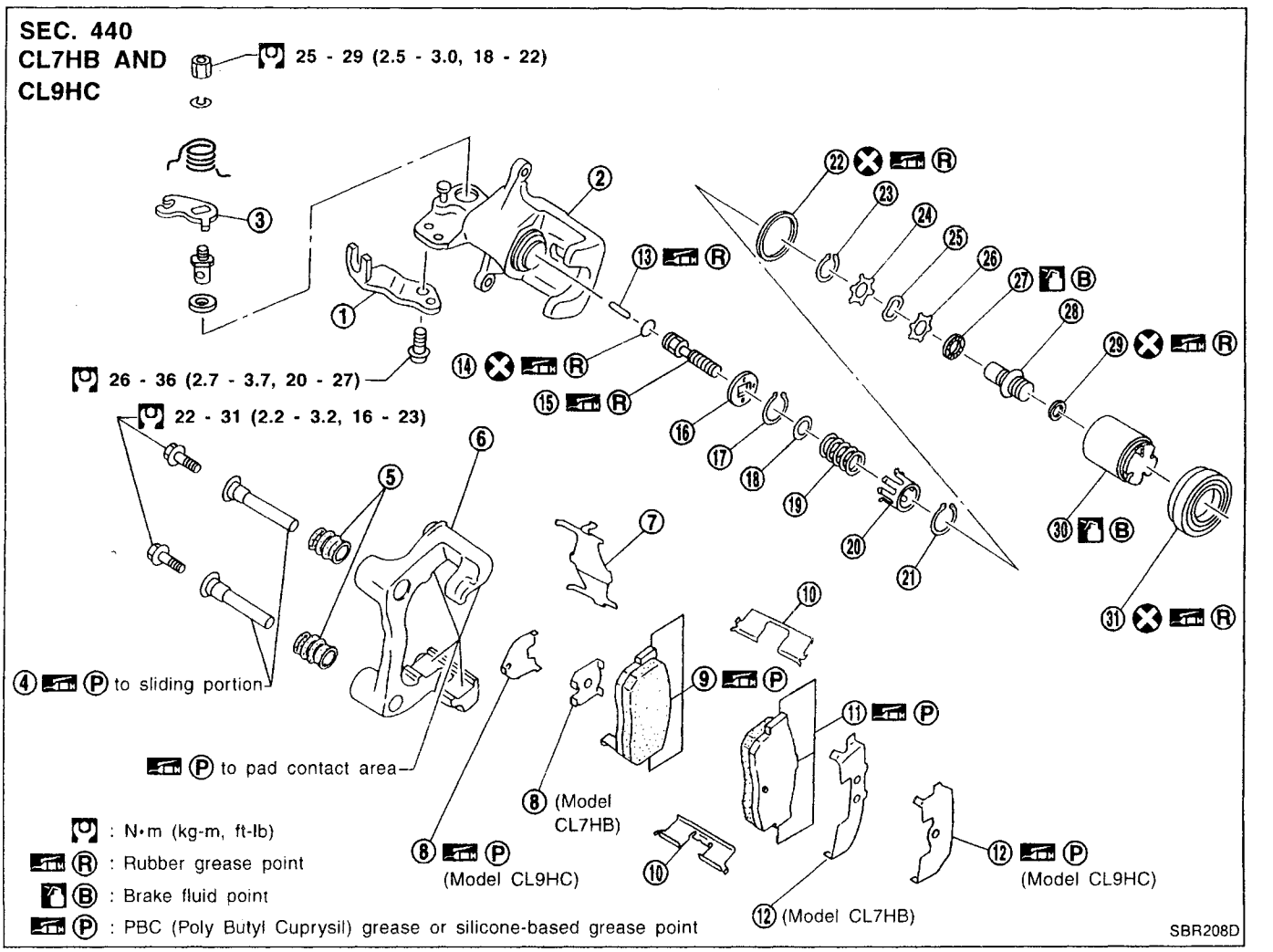

①	Cable guide	⑫	Outer shim	㉒	Piston seal
②	Cylinder	⑬	Strut	㉓	Snap ring
③	Toggle lever	⑭	O-ring	㉔	Spacer
④	Pin	⑮	Push rod	㉕	Wave washer
⑤	Pin boot	⑯	Key plate	㉖	Spacer
⑥	Torque member	⑰	Snap ring	㉗	Bearing
⑦	Retainer	⑱	Seat	㉘	Adjuster
⑧	Inner shim	⑲	Spring	㉙	Cup
⑨	Inner pad	⑳	Spring cover	㉚	Piston
⑩	Pad retainer	㉑	Snap ring	㉛	Piston boot
⑪	Outer pad				

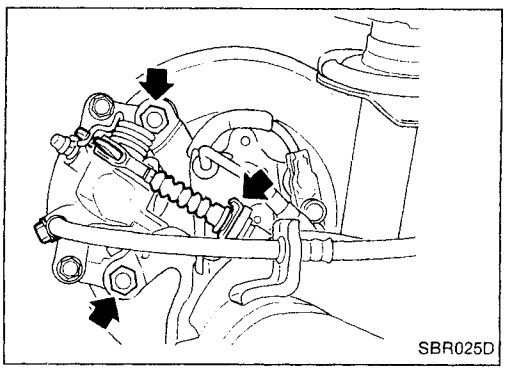
SBR025D

Removal

WARNING:

Clean brake pads with a vacuum dust collector to minimize the hazard of airborne particles or other materials.

1. Remove parking brake cable lock plate.
2. Remove torque member fixing bolts and connecting bolt.

It is not necessary to remove connecting bolt except for disassembly or replacement of caliper assembly. In this case, suspend caliper assembly with wire so as not to stretch brake hose.

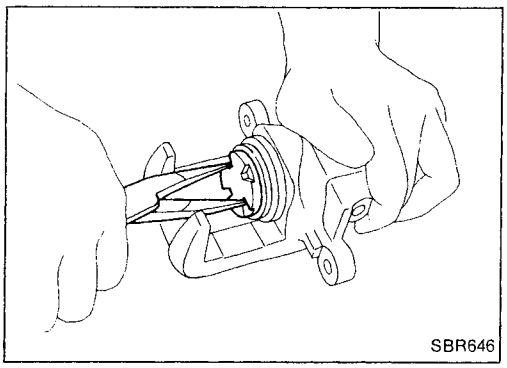
SBR646

Disassembly

1. Remove piston by turning it counterclockwise with suitable long nose pliers or commercial service tool.

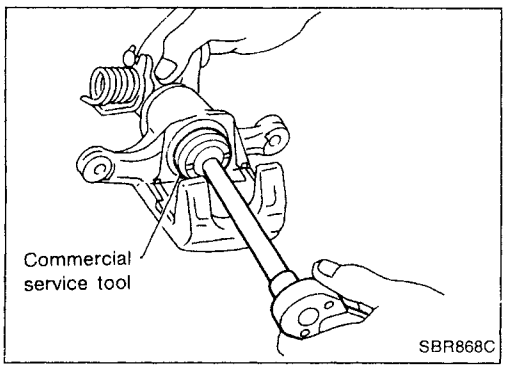

SBR868C

BR

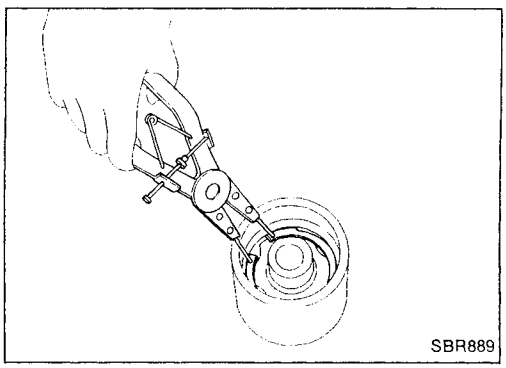
SBR889

2. Remove snap ring from piston with suitable pliers and remove adjusting nut.

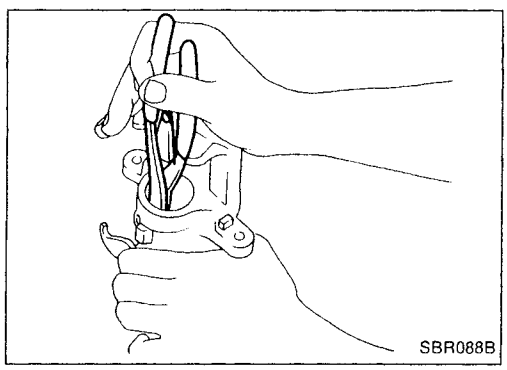
SBR088B

3. Disassemble cylinder body.

a. Pry off snap ring with suitable pliers, then remove spring cover, spring and seat.

b. Remove snap ring, then remove key plate, push rod, rod and strut.

Disassembly (Cont'd)

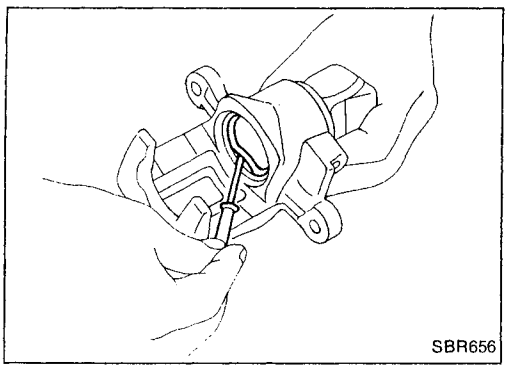

c. Remove piston seal.
Be careful not to damage cylinder body.

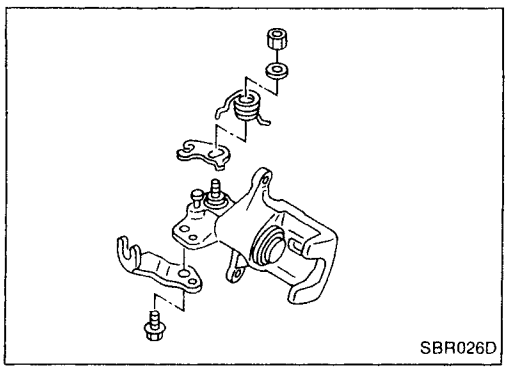

4. Remove return spring, toggle lever and cable guide.

Inspection — Caliper

CAUTION:
Use brake fluid to clean cylinder. Never use mineral oil.

CYLINDER BODY

- Check inside surface of cylinder for score, rust, wear, damage or presence of foreign objects. If any of the above conditions are observed, replace cylinder body.
- Minor damage from rust or foreign objects may be eliminated by polishing surface with a fine emery paper. Replace cylinder body if necessary.

TORQUE MEMBER

Check for wear, cracks or other damage. Replace if necessary.

PISTON

CAUTION:
Piston sliding surface is plated. Do not polish with emery paper even if rust or foreign objects is stuck to sliding surface.
Check piston for score, rust, wear, damage or presence of foreign objects. Replace if any of the above conditions are observed.

SLIDE PIN, PIN BOLT, AND PIN BOOT

Check for wear, cracks or other damage.
Replace if any of the above conditions are observed.

Inspection — Rotor

RUBBING SURFACE

Check rotor for roughness, cracks or chips.

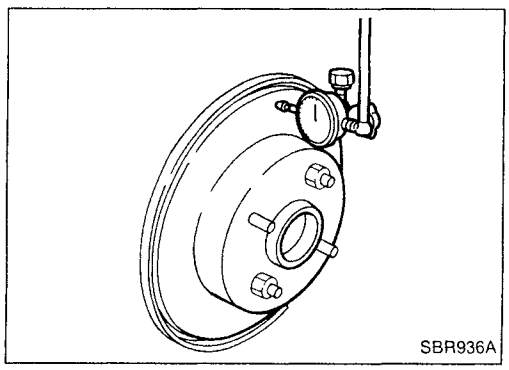
SBR936A

RUNOUT

1. Secure rotor to wheel hub with at least two nuts (M12 x 1.25).
2. Check runout using a dial indicator.

Make sure that wheel bearing axial end play is within the specifications before measuring. Refer to "Rear Wheel Bearing" of "ON-VEHICLE SERVICE" in RA section.

3. Change relative positions of rotor and wheel hub so that runout is minimized.

   Maximum runout:
   0.07 mm (0.0028 in)

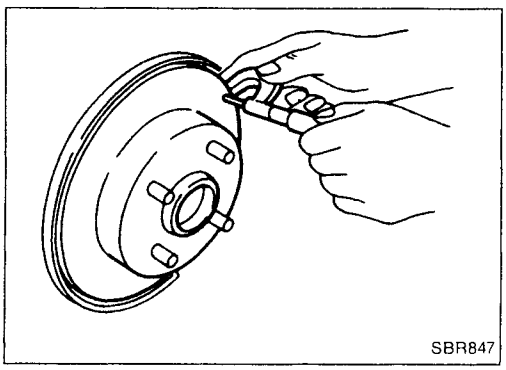
SBR847

THICKNESS

Rotor repair limit:
Minimum thickness
CL7HB 6.0 mm (0.236 in)
CL9HC 8.0 mm (0.315 in)
Thickness variation (At least 8 portions)
Maximum 0.02 mm (0.0008 in)

Replace rotor if any of the above do not meet the specifications.

BR

Assembly

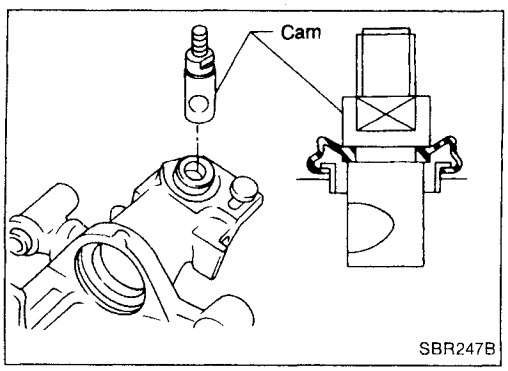

SBR247B

1. Insert cam with depression facing towards open end of cylinder.

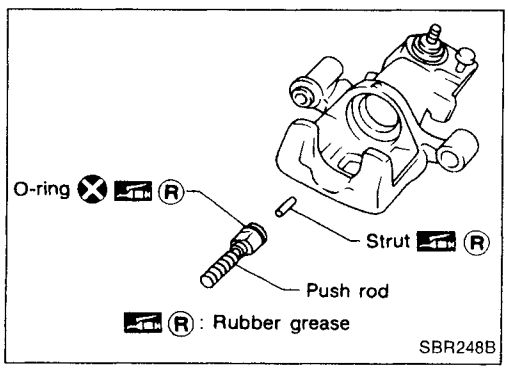

SBR248B

2. Generously apply rubber grease to strut and push rod to make insertion easy.

Assembly (Cont'd)

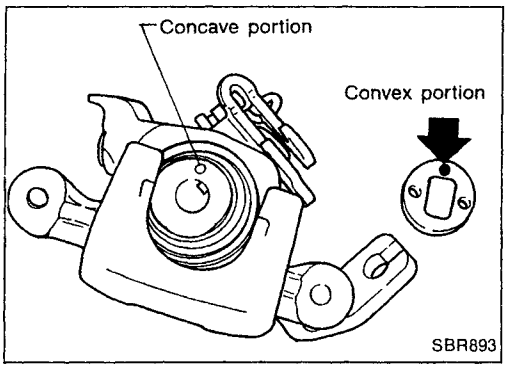

3. Match protrusion on key plate with depression in cylinder.

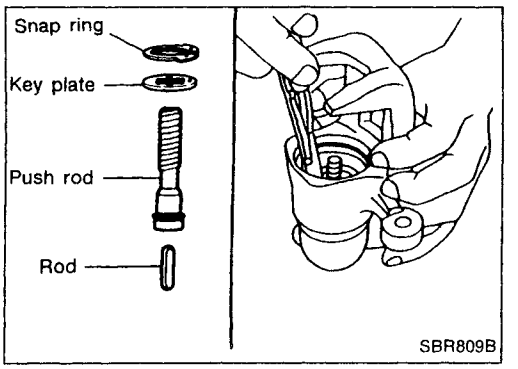

4. Install snap ring with a suitable tool.

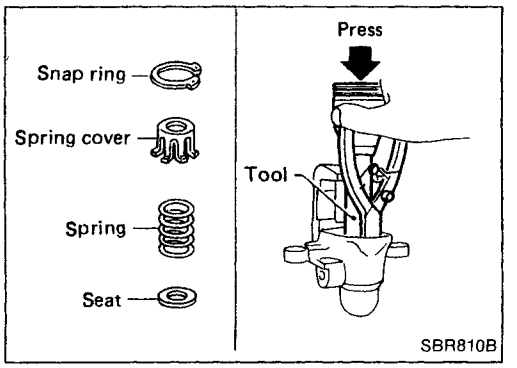

5. Install seat, spring, spring cover and snap ring while depressing with suitable tool.

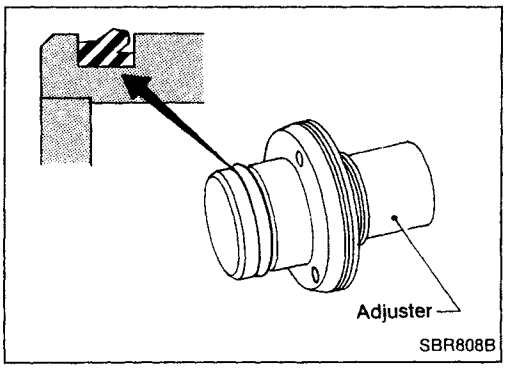

6. Install adjuster in the specified direction.

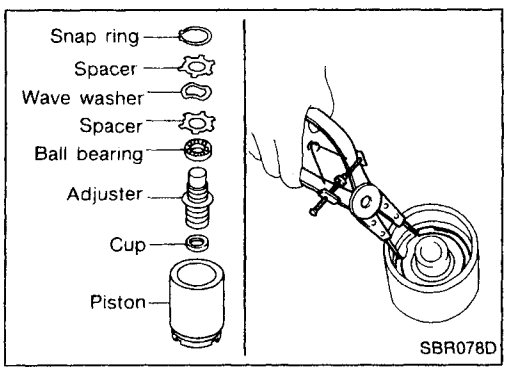

7. Install cup, adjuster, bearing, spacers, washers and snap ring with a suitable tool.

Assembly (Cont'd)

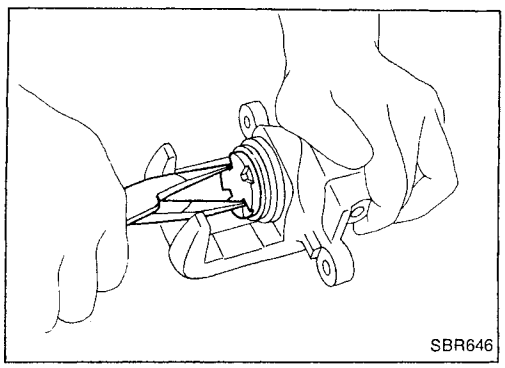

8. Insert piston seal into groove on cylinder body.
9. With piston boot fitted to piston, insert piston boot into groove on cylinder body and fit piston by turning it clockwise with long nose pliers, or suitable tool.

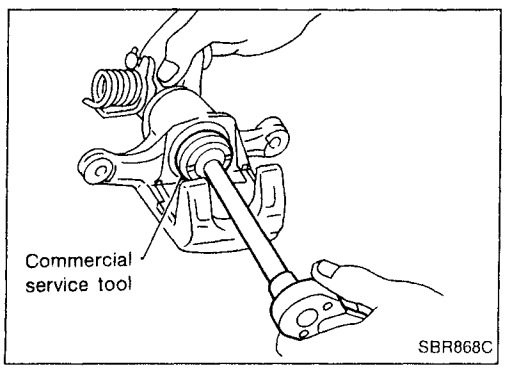

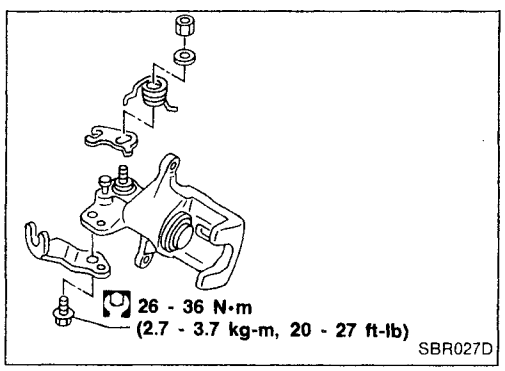

10. Fit toggle lever, return spring and cable guide.

BR

Installation

CAUTION:

- **Refill with new brake fluid "DOT 3" or "DOT 4".**
- **Never reuse drained brake fluid.**
- **Do not mix different types of brake fluids (DOT 3, DOT 4).**

1. Install caliper assembly.
2. Install brake hose to caliper securely.
3. Install all parts and secure all bolts.
4. Bleed air. Refer to "Bleeding Procedure", BR-6.

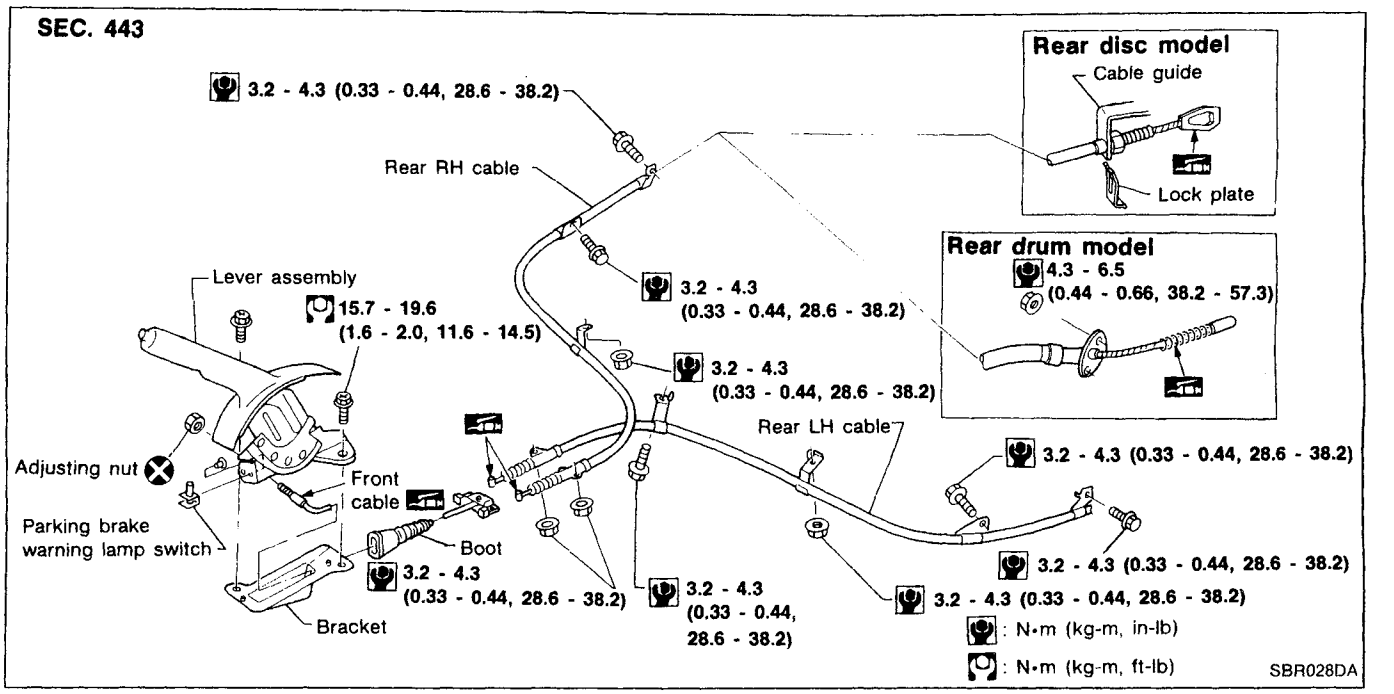

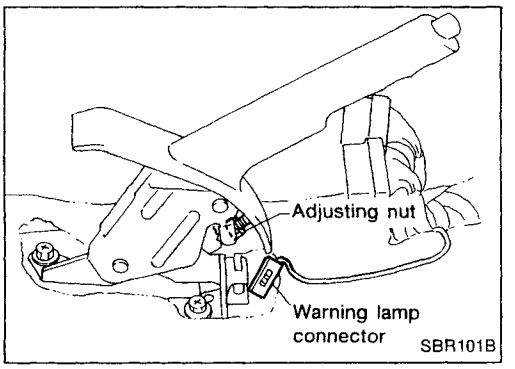

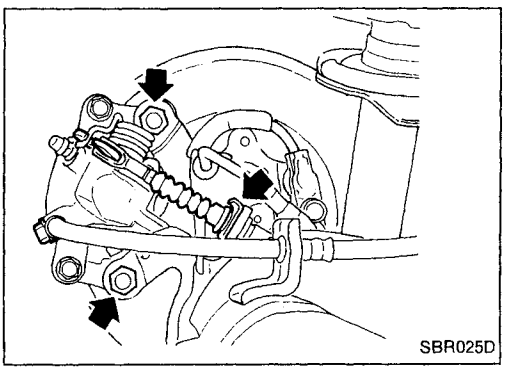

Removal and Installation

1. To remove parking brake cable, first remove center console.
2. Disconnect warning lamp connector.
3. Remove bolts, slacken off and remove adjusting nut.
4. Remove lock plate and disconnect cable (disc brake only). For drum brake models, refer to BR-25.

Inspection

1. Check control lever for wear or other damage. Replace if necessary.
2. Check wires for discontinuity or deterioration. Replace if necessary.
3. Check warning lamp and switch. Replace if necessary.
4. Check parts at each connecting portion and, if deformed or damaged, replace.

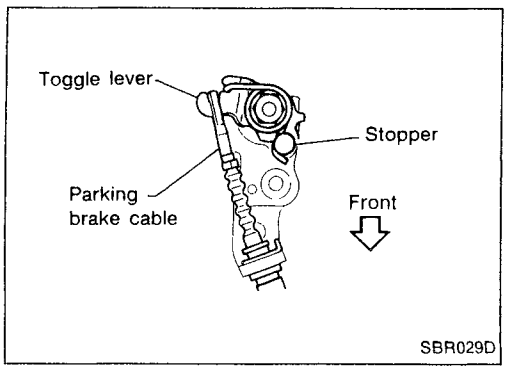

Adjustment

Before or after adjustment, pay attention to the following points.

a. For rear disc brake be sure that toggle lever returns to stopper when parking brake lever is released.
b. There is no drag when parking brake lever is released.

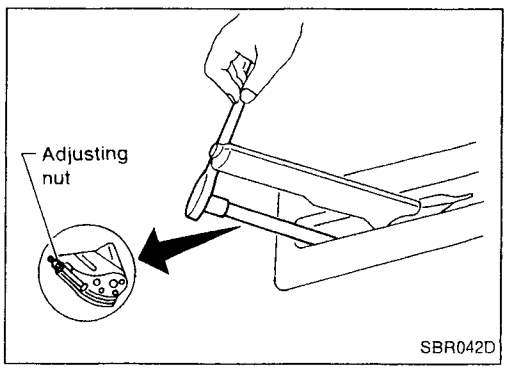

1. Adjust clearance between shoe and drum/pad and rotor as follows:
a. Release parking brake lever and loosen adjusting nut.
b. Depress brake pedal fully at least 10 times with engine running.
2. Pull control lever 4 - 5 notches. Then adjust control lever by turning adjusting nut.

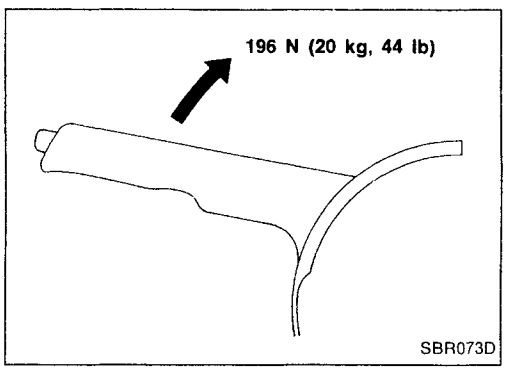

3. Pull control lever with specified amount of force. Check lever stroke and ensure smooth operation.
   Number of notches:
   Drum brake: 7 - 8
   Disc brake: 8 - 9

BR

4. Bend warning lamp switchplate to ensure following. Warning lamp comes on when lever is pulled "A" notches and goes out when fully released.
   Number of "A" notches : 1 or less

Purpose

The Anti-Lock Brake System (ABS) consists of electronic and hydraulic components. It allows for control of braking force so that locking of the wheels can be avoided.
The ABS:
1) Improves proper tracking performance through steering wheel operation.
2) Eases obstacles to be avoided through steering wheel operation.
3) Improves vehicle stability by preventing flat spins.

Operation

- When the vehicle speed is less than 10 km/h (6 MPH) this system does not work.
- The Anti-Lock Brake System (ABS) has self-test capabilities. The system turns on the ABS warning light for 1 second after turning the ignition switch ON. The system performs another test the first time the vehicle reaches 6 km/h (4 MPH). A mechanical noise may be heard as the ABS performs a self-test. This is a normal part of the self-test feature. If a malfunction is found during this check, the ABS warning light will come on.
- During ABS operation, a mechanical noise may be heard. This is a normal condition.

ABS Hydraulic Circuit

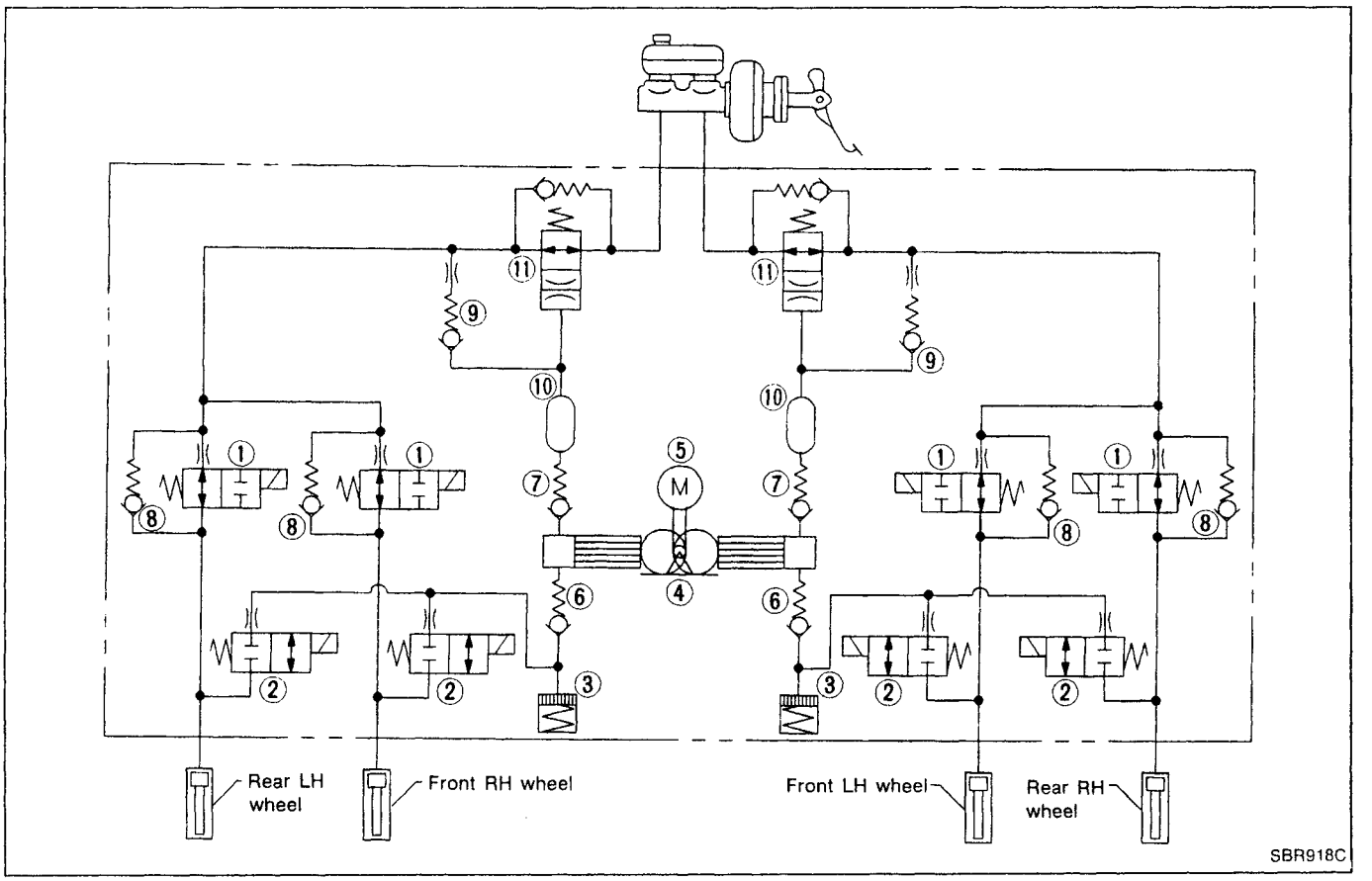

① Inlet solenoid valve
② Outlet solenoid valve
③ Reservoir
④ Pump
⑤ Motor
⑥ Inlet valve
⑦ Outlet valve
⑧ Bypass check valve
⑨ Check valve
⑩ Damper
⑪ Gradient switch

System Components

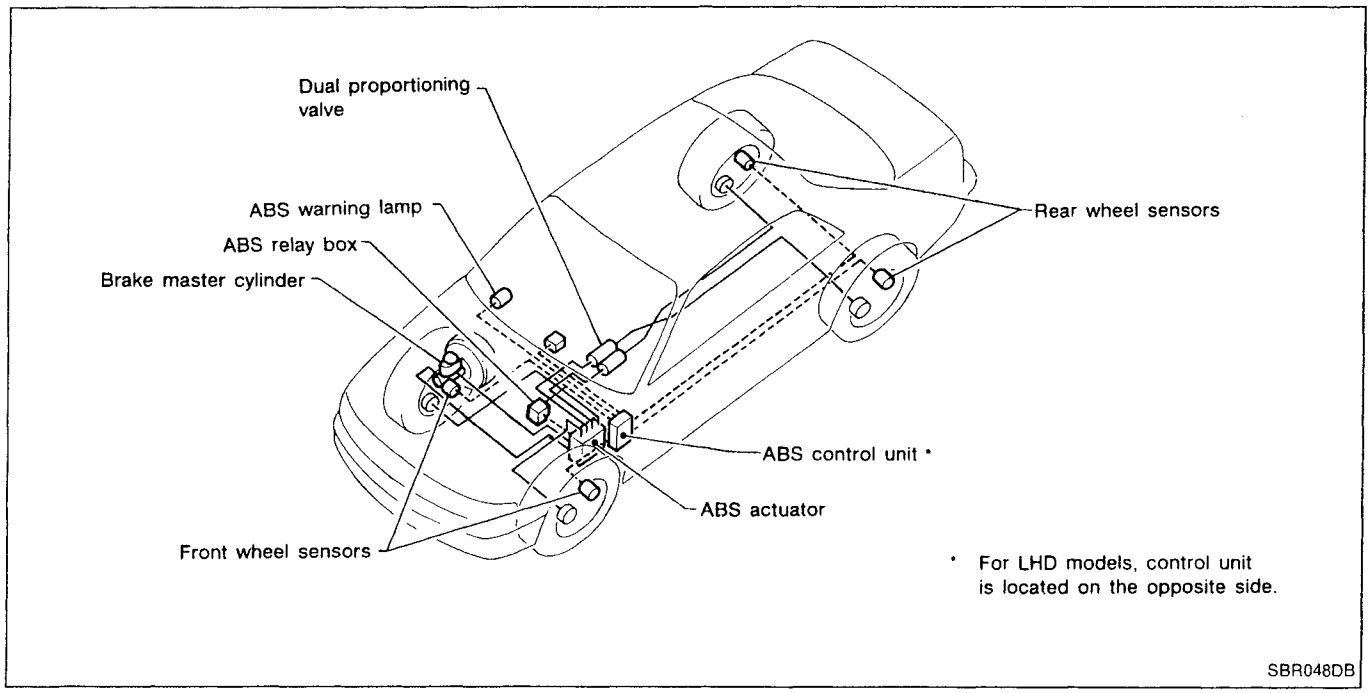

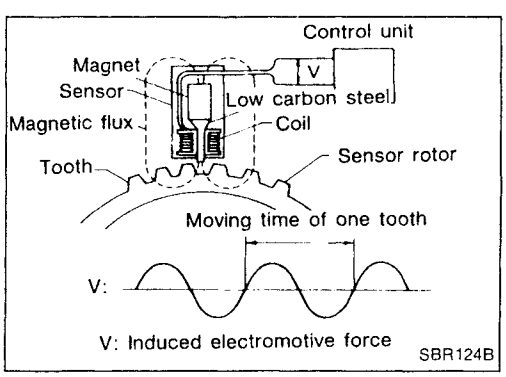

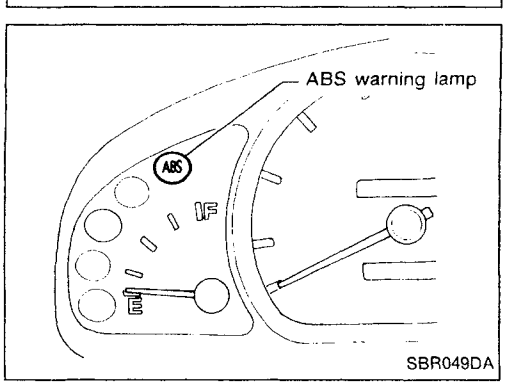

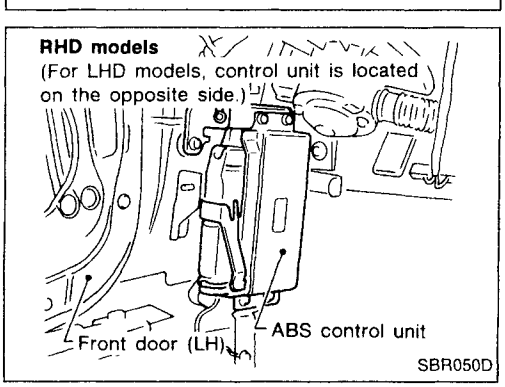

System Description

SENSOR

The sensor unit consists of a gear-shaped sensor rotor and a sensor element. The element contains a bar magnet around which a coil is wound. The sensor is installed on the back side of the brake rotor. Sine-wave current is generated by the sensor as the wheel rotates. The frequency and voltage increase(s) as the rotating speed increases.

CONTROL UNIT

The control unit computes the wheel rotating speed by the signal current sent from the sensor. Then it supplies a DC current to the actuator solenoid valve. It also controls ON-OFF operation of the valve relay and motor relay. If any electrical malfunction should be detected in the system, the control unit causes the warning lamp to light up. In this condition, the ABS will be deactivated by the control unit, and the vehicle's brake system reverts to normal operation.

Removal and Installation

CAUTION:

Be careful not to damage sensor edge and sensor rotor teeth. When removing the front or rear wheel hub assembly, disconnect the ABS wheel sensor from the assembly and move it away.

FRONT WHEEL SENSOR

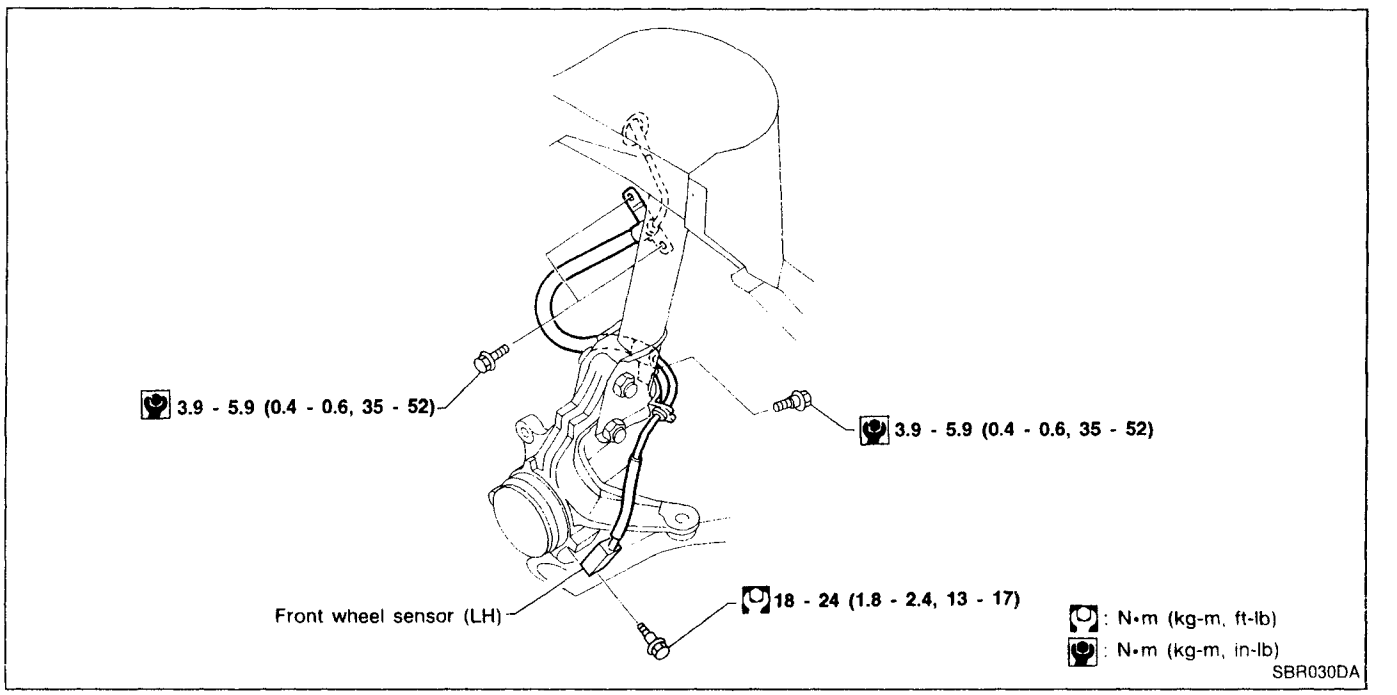

REAR WHEEL SENSOR

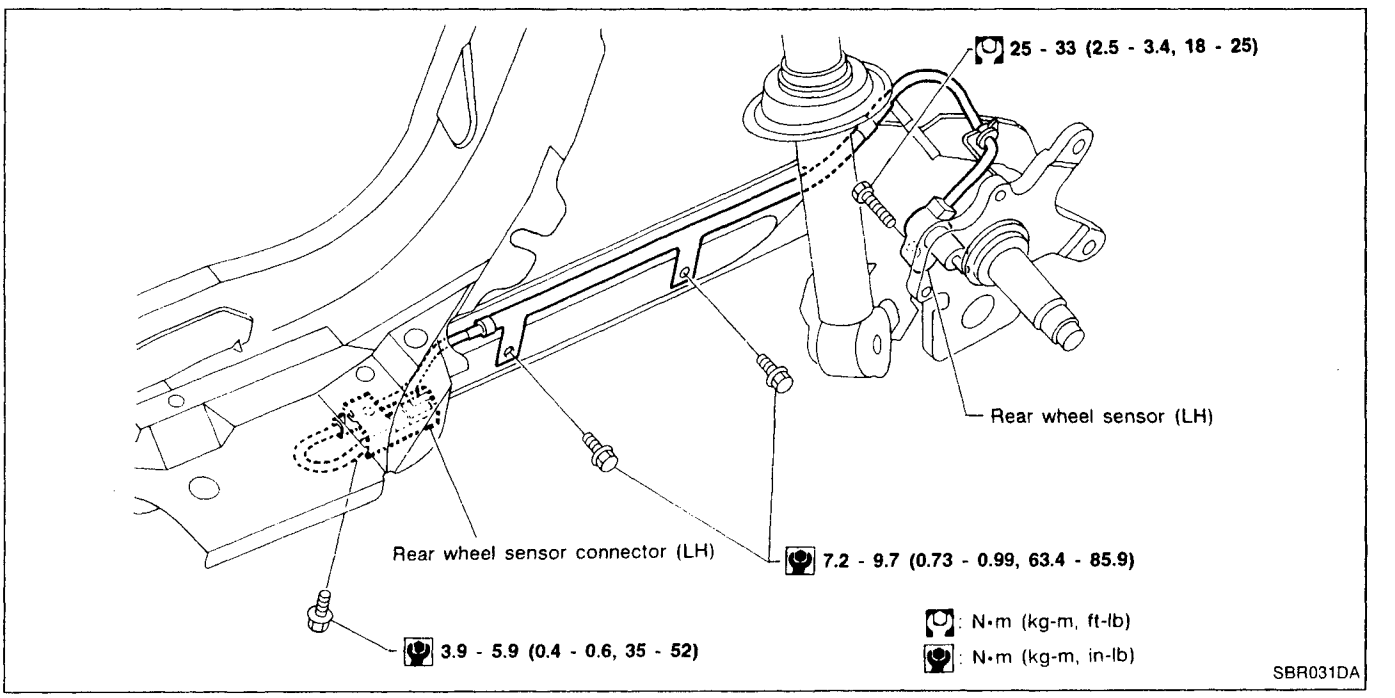

Removal and Installation (Cont'd)

SENSOR ROTOR

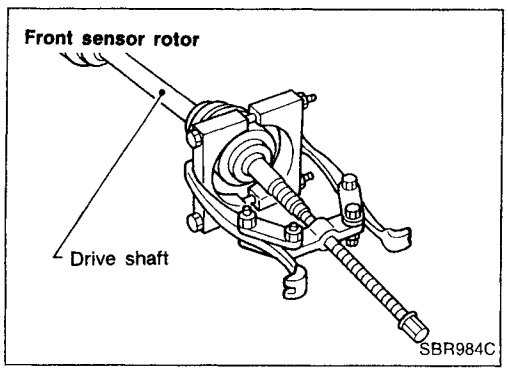

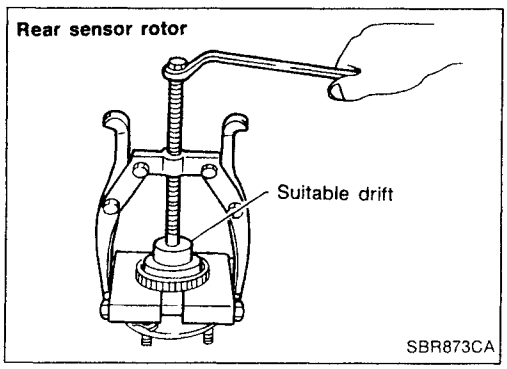

Removal

1. Remove the drive shaft and rear wheel hub. Refer to FA section ("Drive Shaft", FRONT AXLE") and RA section ("Wheel Hub", REAR AXLE").
2. Remove the sensor rotor using suitable puller, drift and bearing replacer.

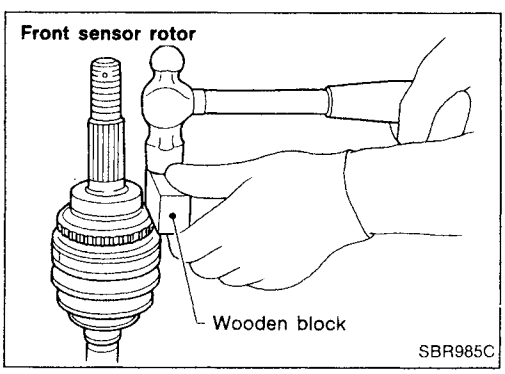

Installation

Install the sensor rotor. For front sensor rotor, use hammer and wooden block. For rear sensor rotor, use suitable drift and press.

- Always replace sensor rotor with new one.

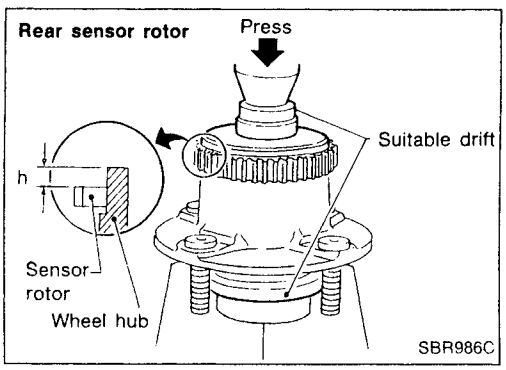

- Pay attention to the dimension of rear sensor rotor as shown in figure.
  h: 4.5 - 5.5 mm (0.177 - 0.217 in)

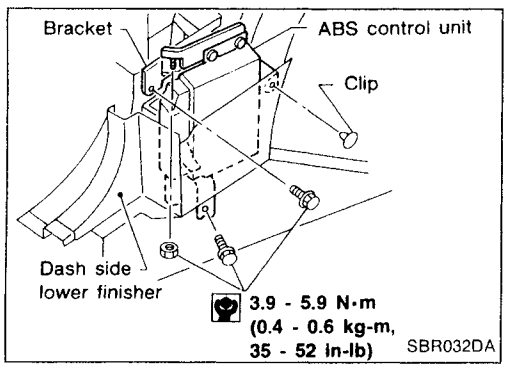

CONTROL UNIT

Location: Passenger side, behind dash side lower finisher.

- **Make sure that the sensor shield ground cable is secured with mounting bolt.**

BR

Removal and Installation (Cont'd)

ABS ACTUATOR

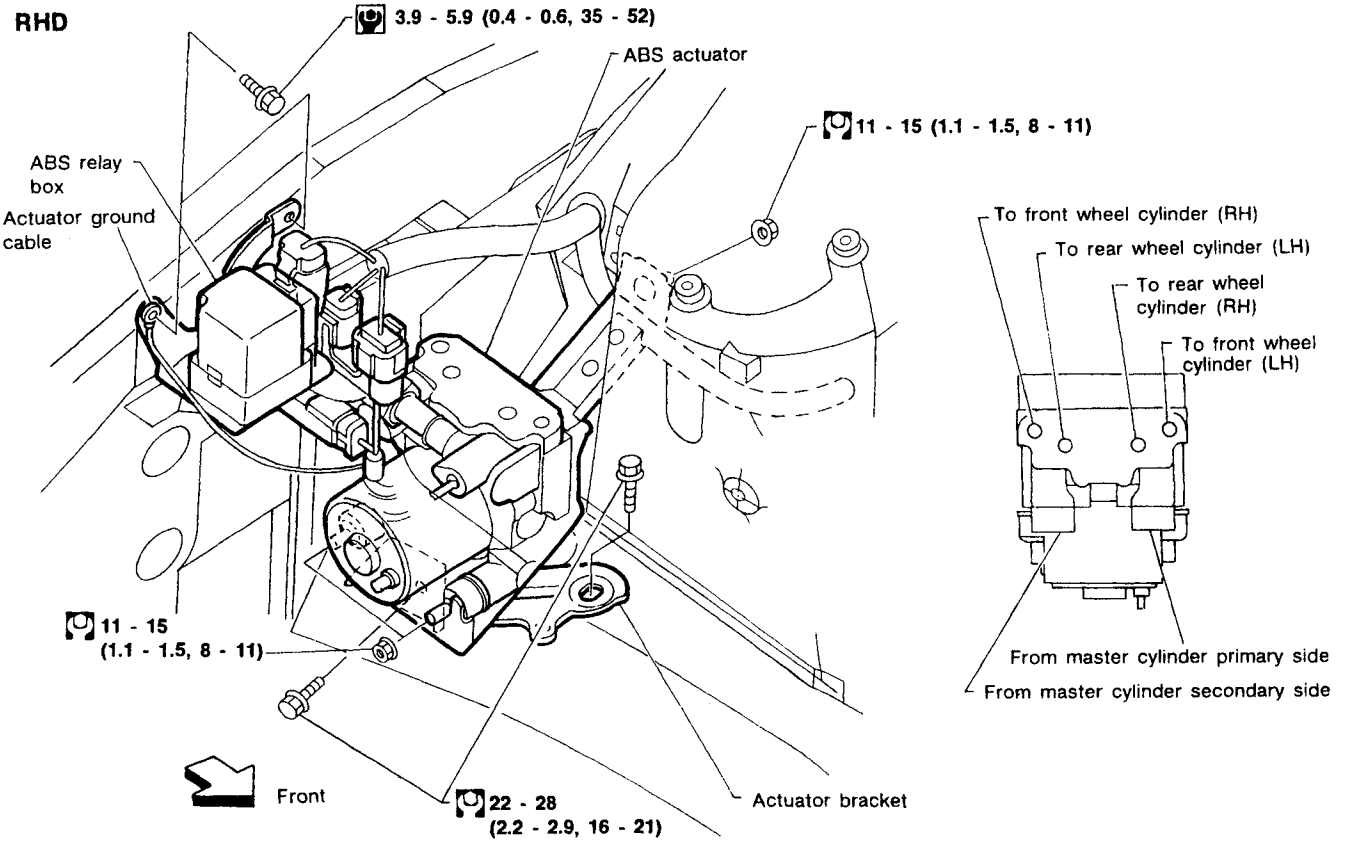

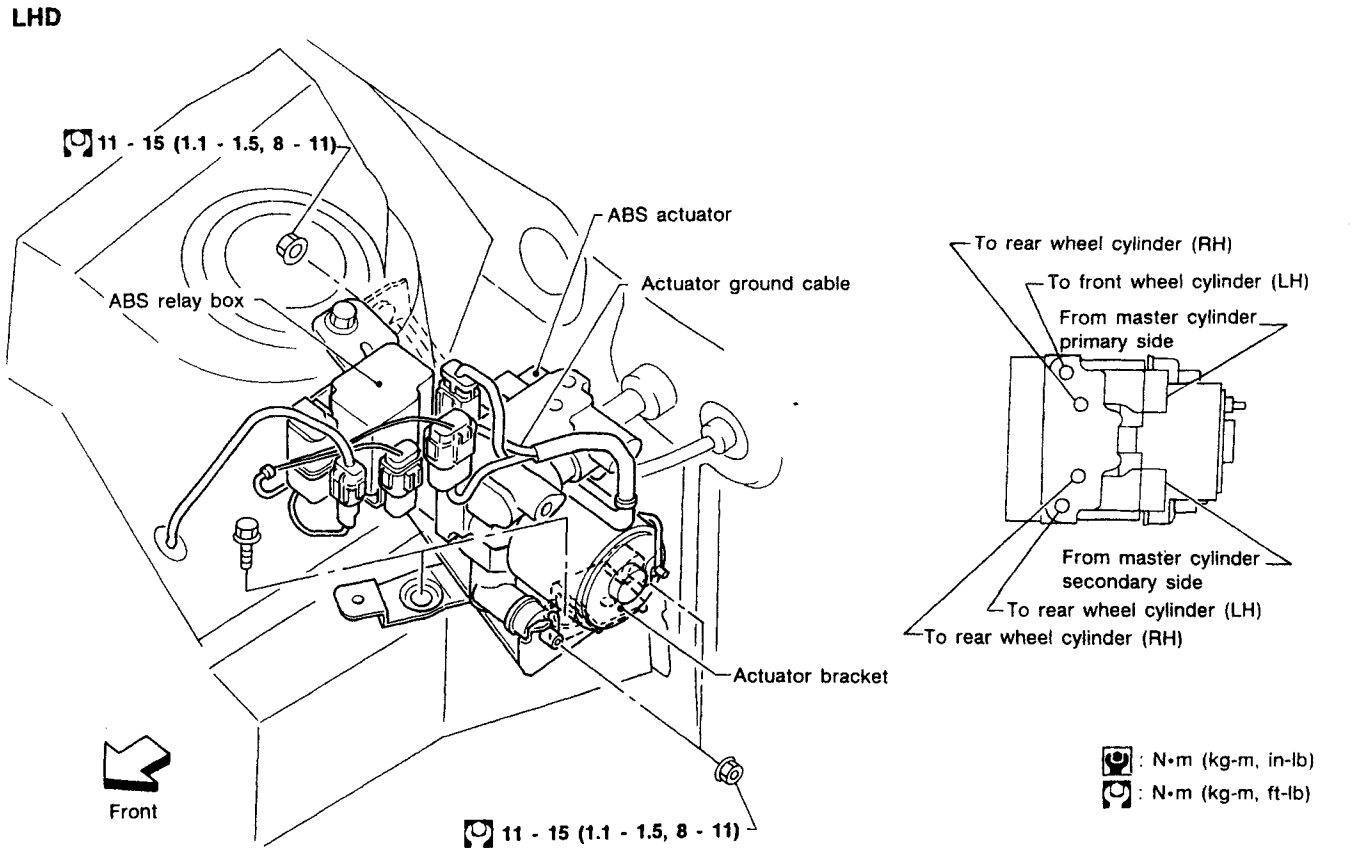

SBR033DA

Removal and Installation (Cont'd)

1. Disconnect battery cable.
2. Drain brake fluid. Refer to BR-5.
3. Discharge air conditioner refrigerant. Refer to HA section ("R-134a Service Procedure", "SERVICE PROCEDURES").

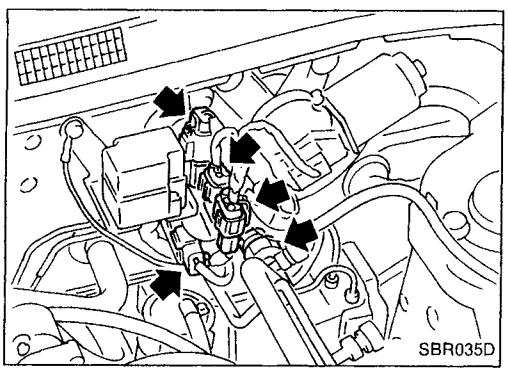

4. Disconnect all connectors from ABS relay bracket.

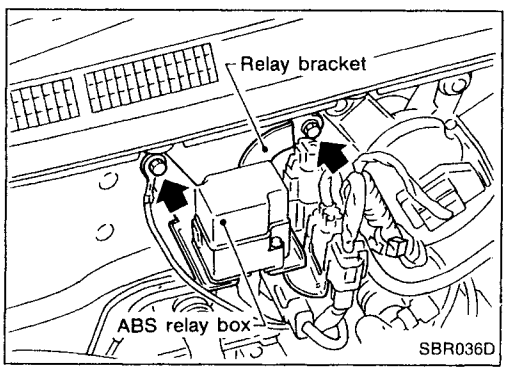

5. Remove mounting bolt for relay bracket.
6. Remove ABS relay box with bracket.
7. Remove air conditioner low-pressure tubes. Refer to HA section, ("Refrigerant Lines", "SERVICE PROCEDURES").

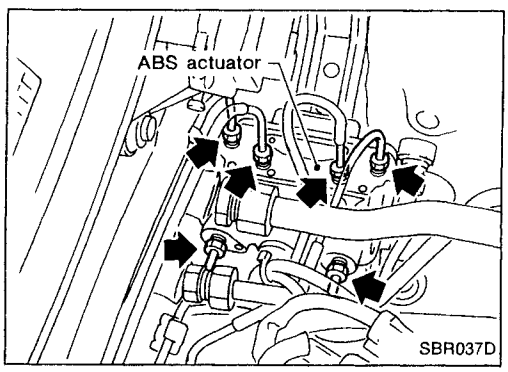

8. Disconnect brake pipes and move away from actuator.
It is not necessary to remove these pipes from vehicle.

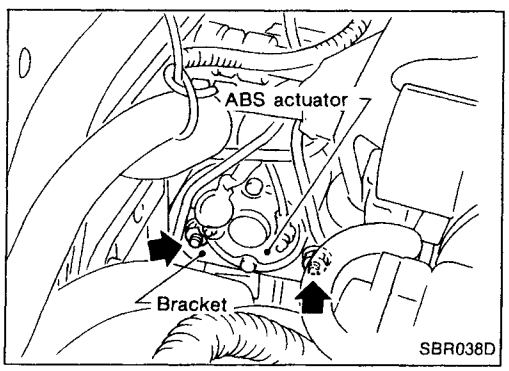

9. Remove/loosen mounting nuts between actuator and bracket.

BR

Removal and Installation (Cont'd)

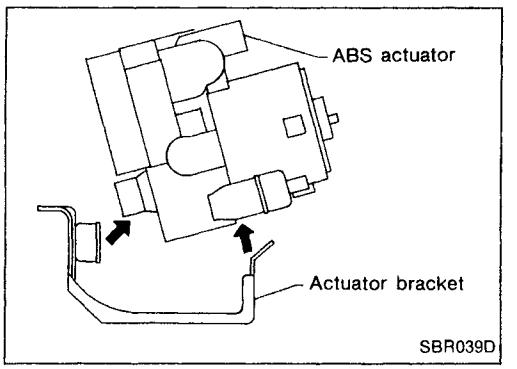

10. Draw out ABS actuator as shown.

CAUTION:
After installation, pay attention to the following points:
- **Refill brake fluid and bleed air. Refer to "CHECK AND ADJUSTMENT", BR-5 and "AIR BLEEDING", BR-6, respectively.**
- **Charge air conditioner refrigerant. Refer to HA section, ("R-134a Service Procedure", "SERVICE PROCEDURES").**

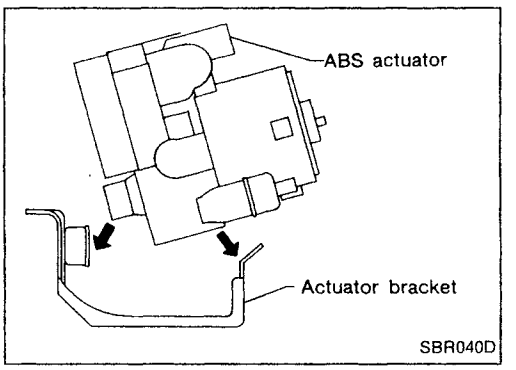

- The installation procedure is the reverse of removal.

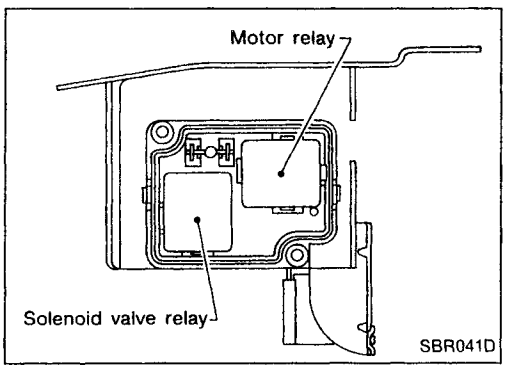

ABS RELAYS

1. Disconnect battery cable.
2. Remove ABS relay cover.

Wiring Diagram — ABS —

BR-ABS-01

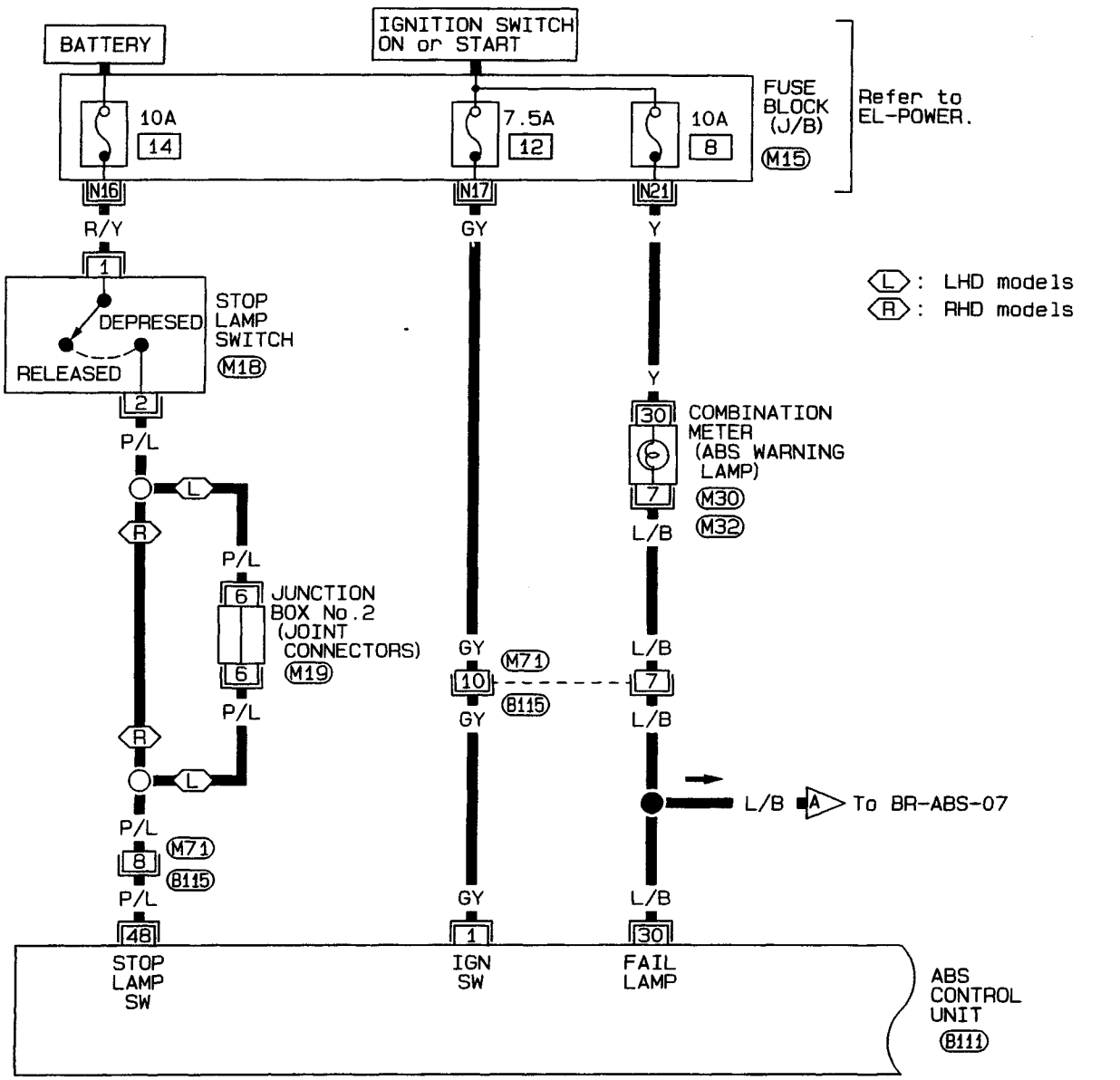

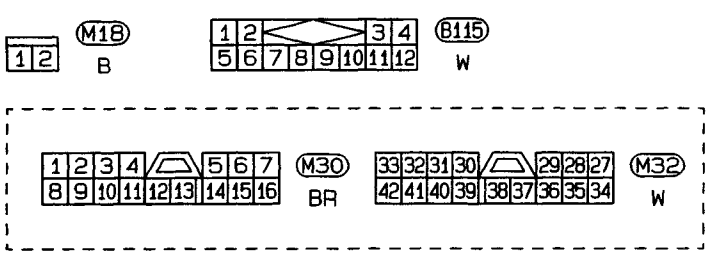

Refer to last page (Foldout page).

M15

M19

B111

BR

HBR002

Wiring Diagram — ABS — (Cont'd)

BR-ABS-02

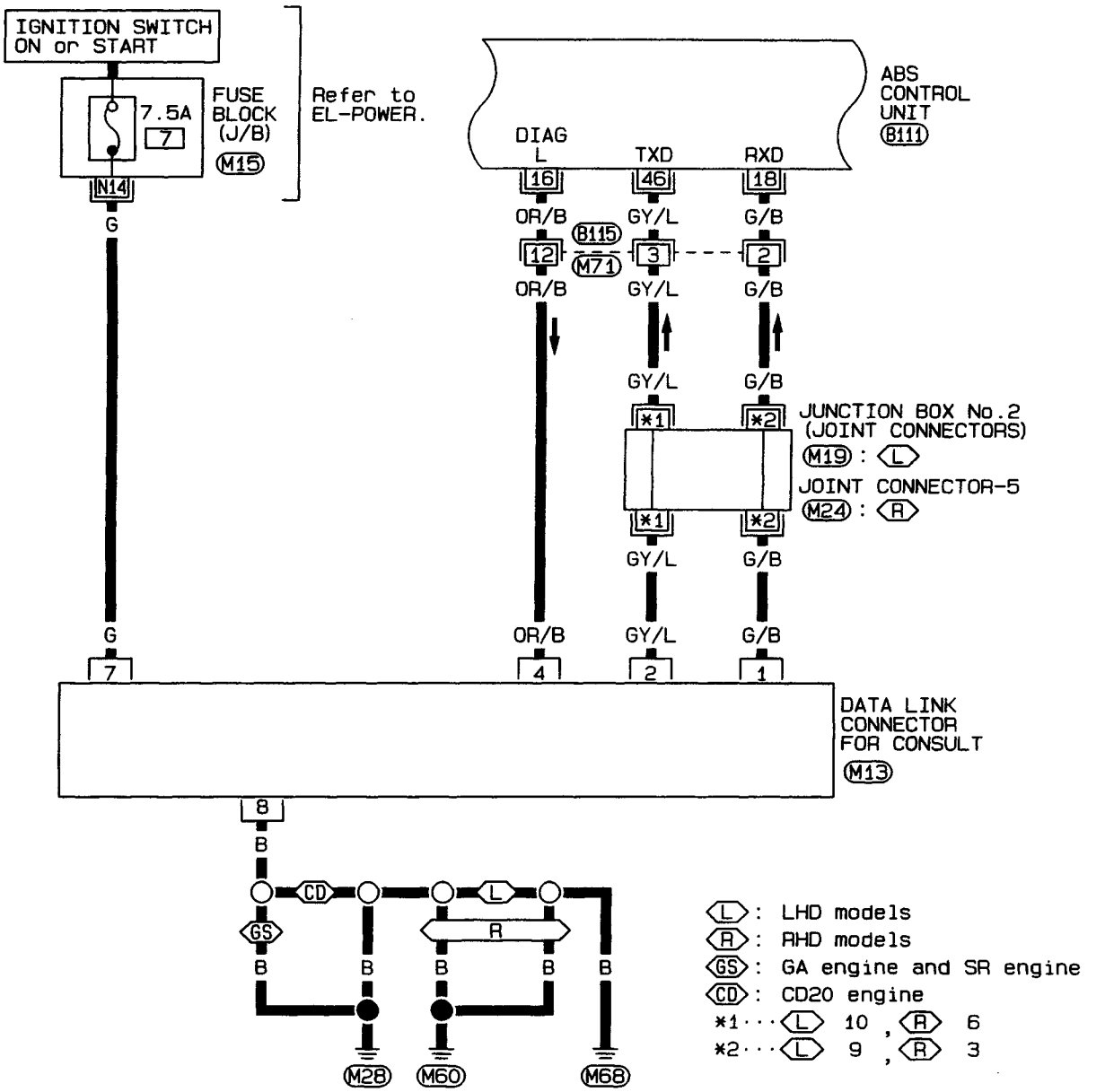

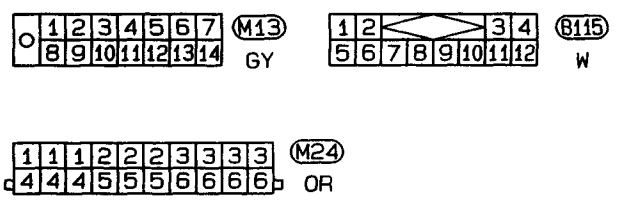

Refer to last page (Foldout page).

M15

M19

B111

HBR003

Wiring Diagram — ABS — (Cont'd)

BR-ABS-03

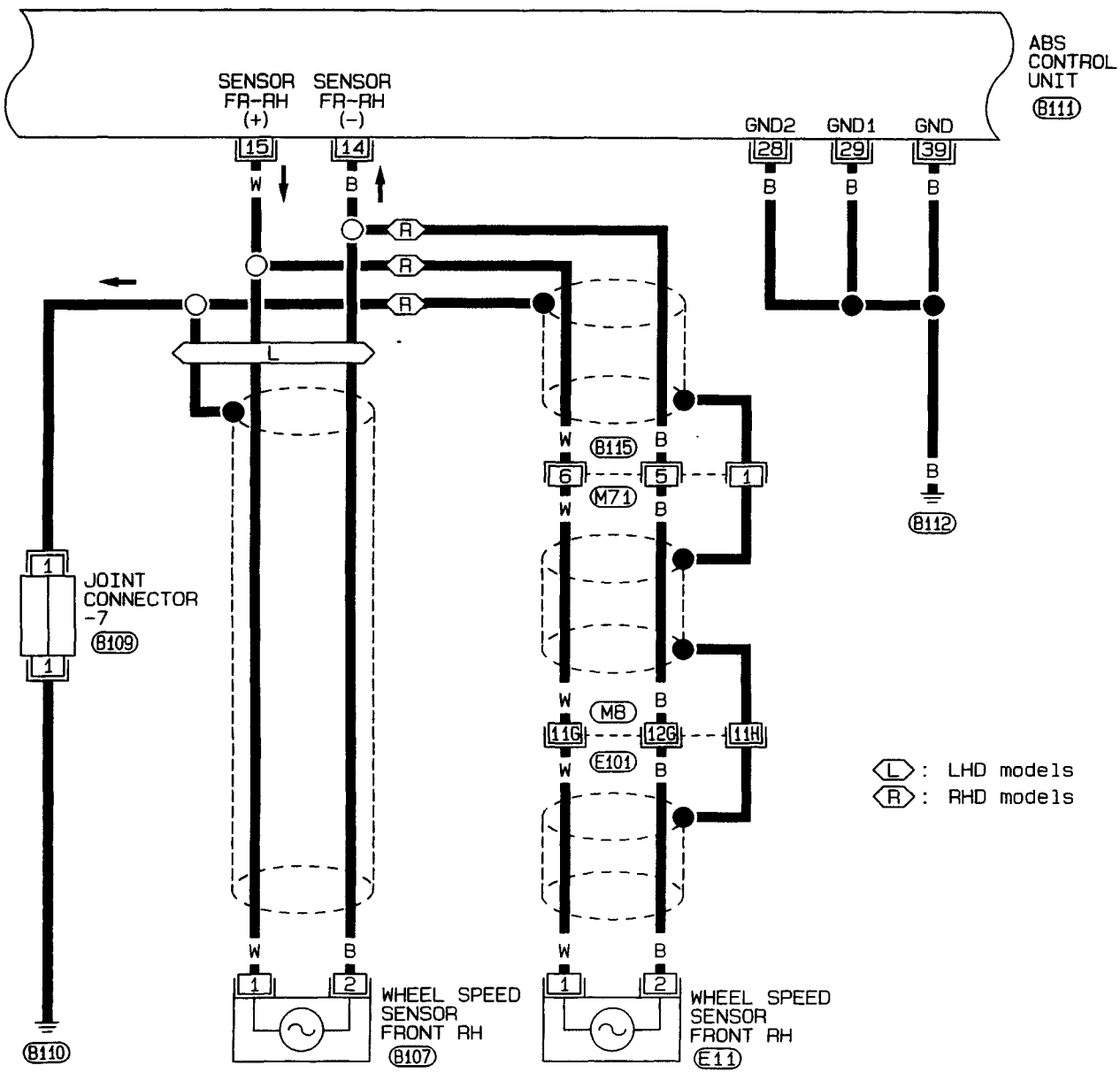

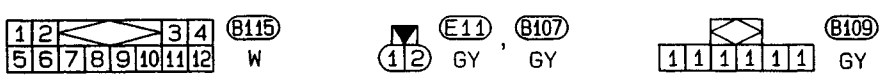

Refer to last page (Foldout page).

M8, E101, B111

BR

HBR004

Wiring Diagram — ABS — (Cont'd)

BR-ABS-04

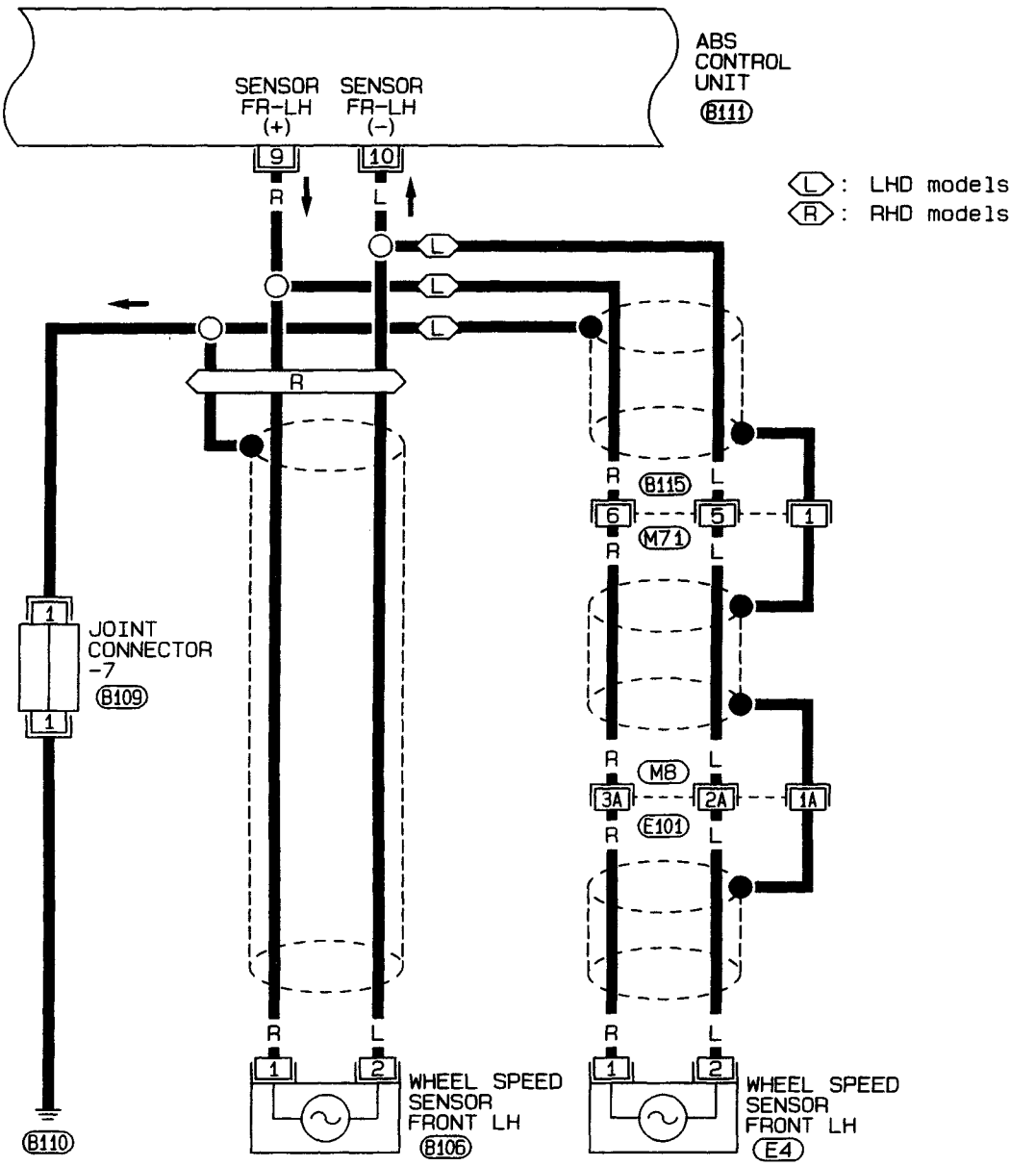

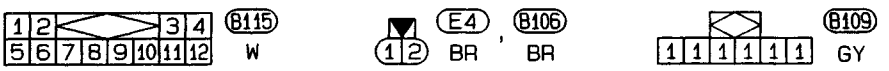

Refer to last page (Foldout page).

M8, E101, B111

HBR005

Wiring Diagram — ABS — (Cont'd)

BR-ABS-05

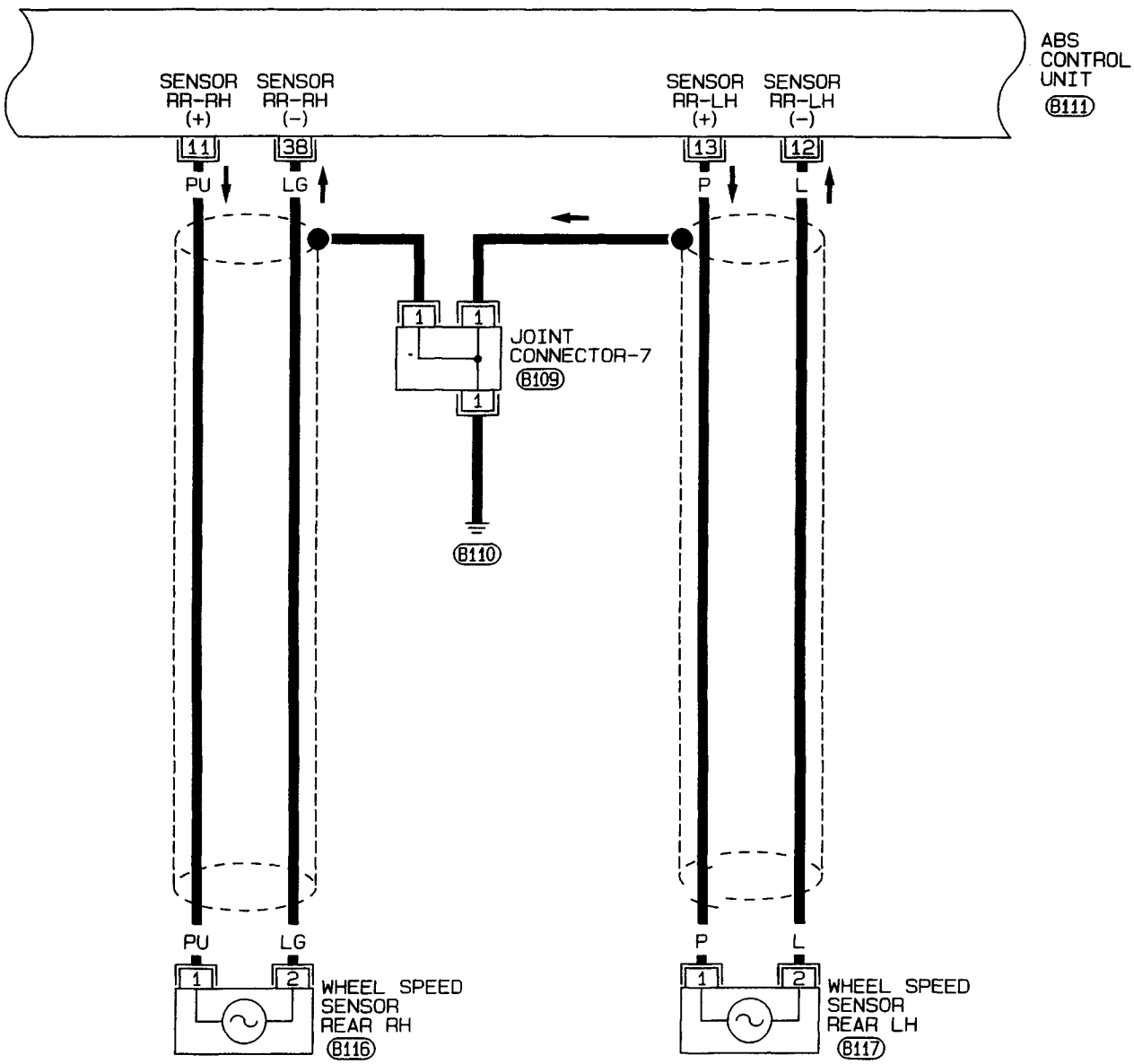

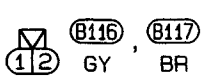

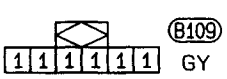

Refer to last page (Foldout page).

B111

BR

HBR006

Wiring Diagram — ABS — (Cont'd)

BR-ABS-06

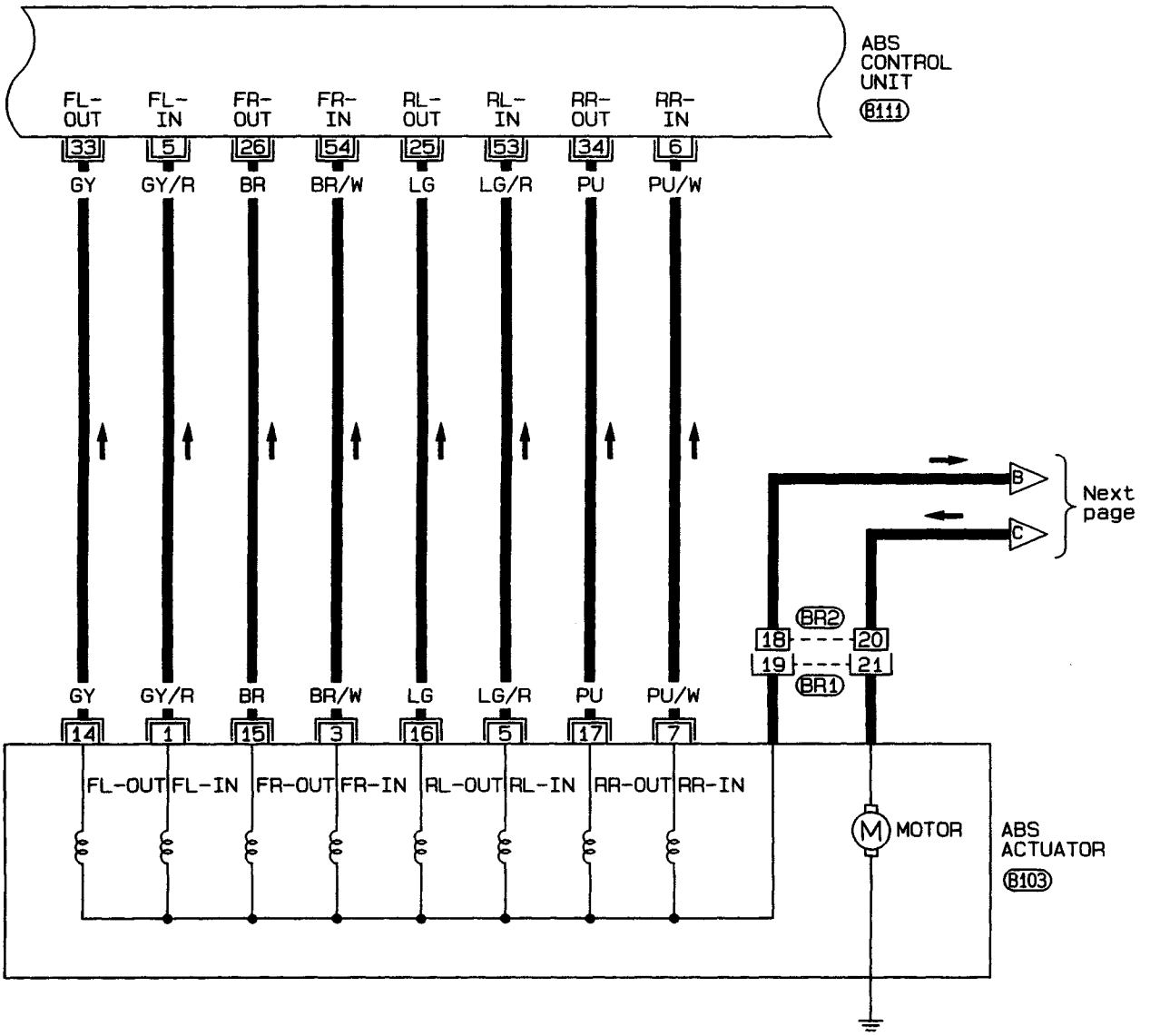

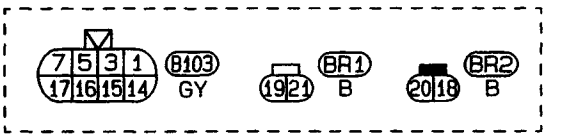

Refer to last page (Foldout page).

B111

HBR007

Wiring Diagram — ABS — (Cont'd)

BR-ABS-07

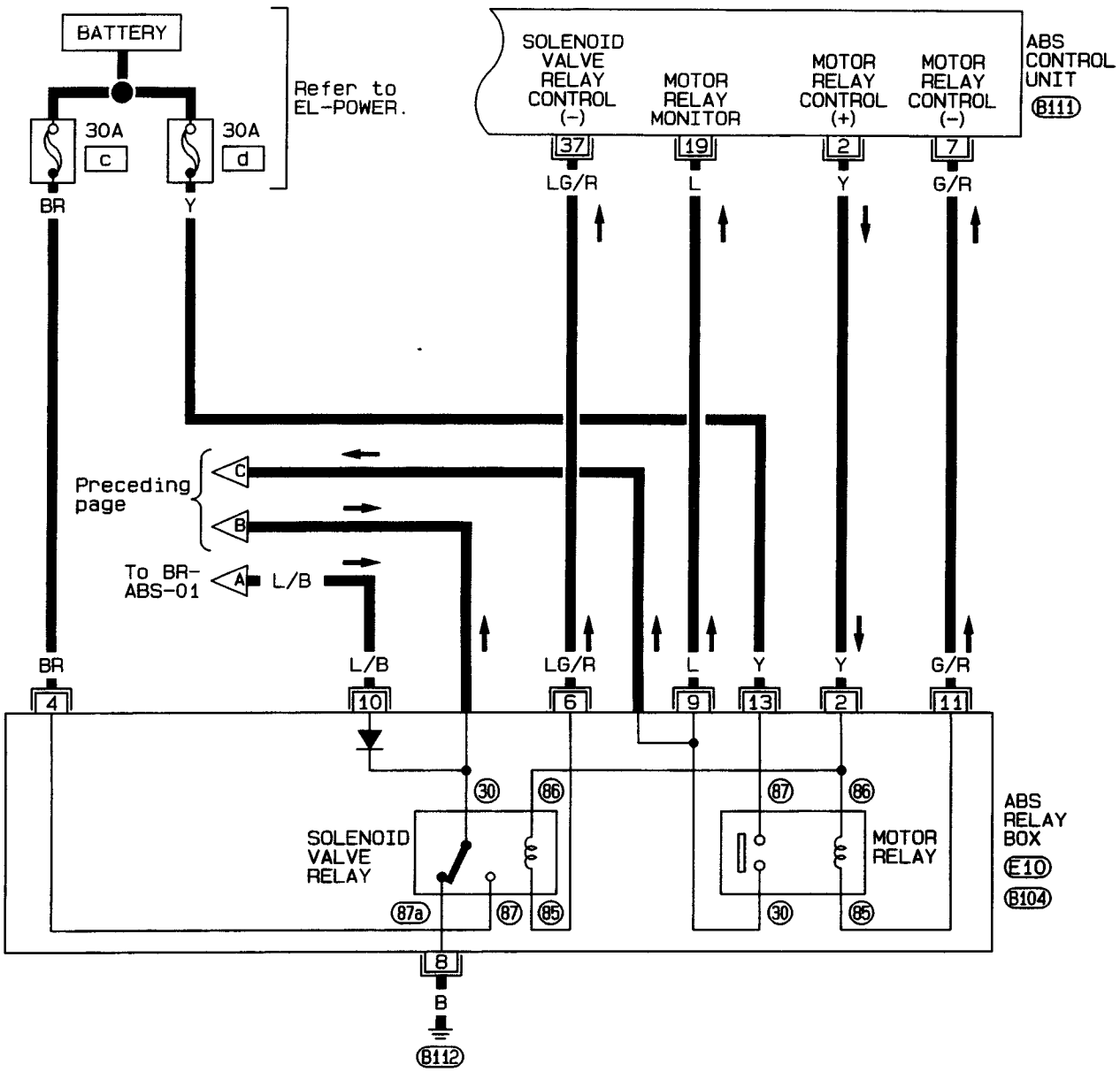

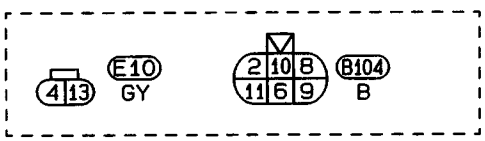

Refer to last page (Foldout page).

B111

BR

HBR008

Contents

How to Perform Trouble Diagnoses for Quick and Accurate Repair BR-52
Self-diagnosis BR-53
CONSULT BR-58
CONSULT Inspection Procedure BR-59
Component Parts and Harness Connector Location BR-64
Preliminary Check BR-65
Ground Circuit Check BR-66
Circuit Diagram for Quick Pinpoint Check BR-67
Diagnostic Procedure 1 Warning lamp does not come on BR-68
Diagnostic Procedure 2 Warning lamp stays on BR-69
Diagnostic Procedure 3 ABS actuator solenoid valve BR-72
Diagnostic Procedure 4 Wheel sensor or rotor BR-74
Diagnostic Procedure 5 Motor relay or motor BR-76
Diagnostic Procedure 6 Solenoid valve relay BR-79
Diagnostic Procedure 7 Power supply BR-81
Diagnostic Procedure 8 Control unit BR-82
Diagnostic Procedure 9 Pedal vibration and noise BR-82
Diagnostic Procedure 10 Long stopping distance BR-83
Diagnostic Procedure 11 Unexpected pedal action BR-83
Diagnostic Procedure 12 ABS does not work BR-84
Diagnostic Procedure 13 ABS works frequently BR-84
Electrical Component Inspection BR-85

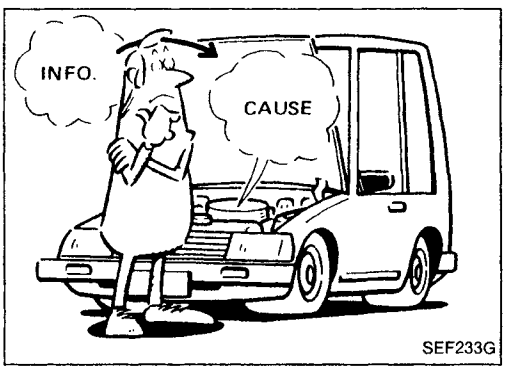

SEF233G

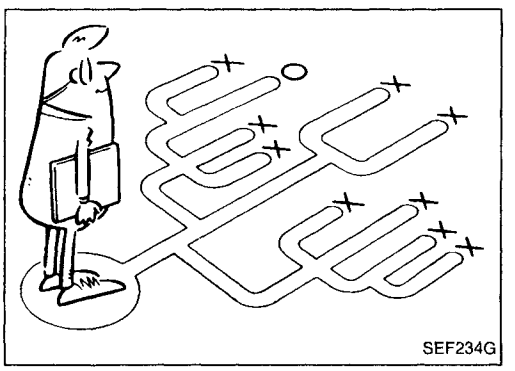
SEF234G

How to Perform Trouble Diagnoses for Quick and Accurate Repair

INTRODUCTION

The ABS system has an electronic control unit to control major functions. The control unit accepts input signals from sensors and instantly drives the actuators. It is essential that both kinds of signals are proper and stable. It is also important to check for conventional problems: such as air leaks in booster lines, lack of brake fluid, or other problems with the brake system.

It is much more difficult to diagnose a problem that occurs intermittently rather than continuously. Most intermittent problems are caused by poor electric connections or faulty wiring. In this case, careful checking of suspicious circuits may help prevent the replacement of good parts.

A visual check only may not find the cause of the problems, so a road test should be performed.

Before undertaking actual checks, take just a few minutes to talk with a customer who approaches with a ABS complaint. The customer is a very good source of information on such problems; especially intermittent ones. Through the talks with the customer, find out what symptoms are present and under what conditions they occur.

Start your diagnosis by looking for "conventional" problems first. This is one of the best ways to troubleshoot brake problems on an ABS controlled vehicle.

Self-diagnosis (For Europe)

FUNCTION

- When a problem occurs in the ABS, the warning lamp on the instrument panel comes on.
- A maximum of three malfunctions are stored in the memory of the ABS control unit.

Erase the self-diagnosis results stored in the control unit after malfunctions are repaired (See next page).

- The self-diagnosis results are identified by CONSULT or warning lamp.

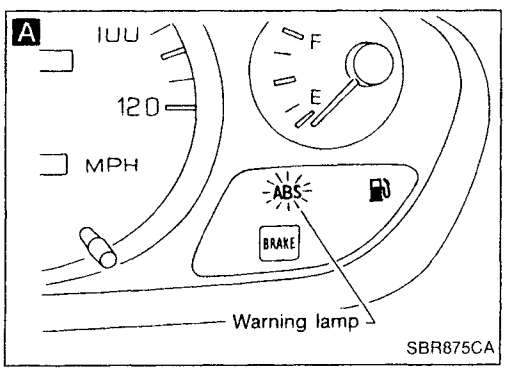

SELF-DIAGNOSIS PROCEDURE

Start engine.
Drive vehicle over 15 km/h (9 MPH) for at least one minute.

↓

A

Stop vehicle with engine running.
Make sure that the ABS warning lamp activates.

↓

Verify the location of the malfunction with the malfunction code chart.
Then make necessary repairs following the diagnostic procedures.

↓

After the malfunctions are repaired, erase the self-diagnostic results stored in the control unit.
Disconnect connectors for ABS control unit or the battery negative terminal for at least one minute.

↓

Check warning lamp for deactivation after driving vehicle over 15 km/h (9 MPH) for at least one minute.

↓

Test the ABS in a safe area to verify that it functions properly.

BR

HOW TO READ SELF-DIAGNOSTIC RESULTS (Malfunction codes)

- Determine the code No. by counting the number of times the warning lamp flashes on and off.
- The malfunction code chart is given on the next page.

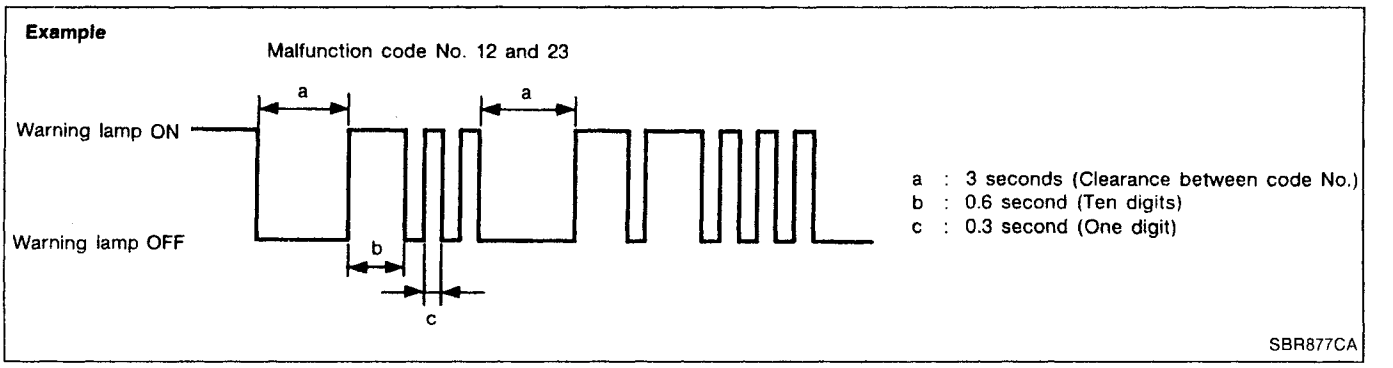

HOW TO ERASE SELF-DIAGNOSTIC RESULTS (Malfunction codes)

- Disconnect ABS control unit connectors or battery negative terminal for at least one minute.
- When using CONSULT, touch "ERASE" on the CONSULT screen with self-diagnostic results mode.

Self-diagnosis (For Europe) (Cont'd)

MALFUNCTION CODE/SYMPTOM CHART

Code No. (No. of warning lamp flashes)	Malfunctioning part	Diagnostic procedure
45	Actuator front left outlet solenoid valve	3
46	Actuator front left inlet solenoid valve	3
41	Actuator front right outlet solenoid valve	3
42	Actuator front right inlet solenoid valve	3
51	Actuator rear right outlet solenoid valve	3
52	Actuator rear right inlet solenoid valve	3
55	Actuator rear left outlet solenoid valve	3
56	Actuator rear left inlet solenoid valve	3
25	Front left sensor (open-circuit)	4
26	Front left sensor (short-circuit)	4
21	Front right sensor (open-circuit)	4
22	Front right sensor (short-circuit)	4
35	Rear left sensor (open-circuit)	4
36	Rear left sensor (short-circuit)	4
31	Rear right sensor (open-circuit)	4
32	Rear right sensor (short-circuit)	4
18	Sensor rotor	4
61	Actuator motor or motor relay	5
63	Solenoid valve relay	6
57	Power supply (Low voltage)	7
71	Control unit	8
Warning lamp stays on when ignition switch is turned on	Control unit power supply circuit Warning lamp bulb circuit Control unit or control unit connector Solenoid valve relay stuck Power supply for solenoid valve relay coil	2
Warning lamp stays on, during self-diagnosis	Control unit	—
Warning lamp does not come on when ignition switch is turned on	Fuse, warning lamp bulb or warning lamp circuit Control unit	1
Warning lamp does not come on during self-diagnosis	Control unit	—
Pedal vibration and noise	—	9
Long stopping distance	—	10
Unexpected pedal action	—	11
ABS does not work	—	12
ABS works frequently	—	13

Self-diagnosis (Except Europe)

FUNCTION

- When a problem occurs in the ABS, the warning lamp on the instrument panel comes on. To start the self-diagnostic results mode, ground the self-diagnostic (check) terminal located on "Data Link Connector for CONSULT". The location of the malfunction is indicated by the warning lamp flashing.

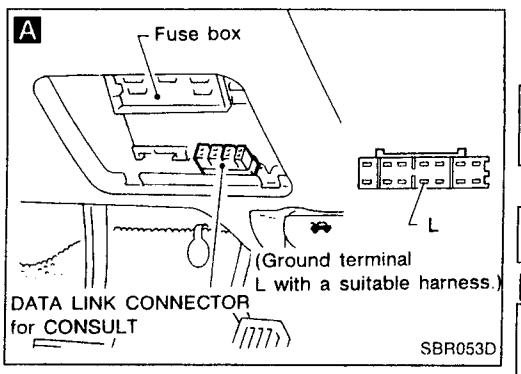

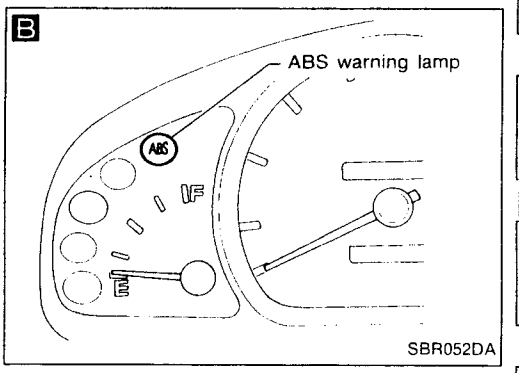

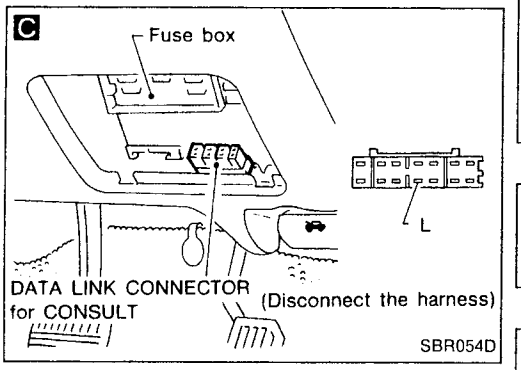

SELF-DIAGNOSIS PROCEDURE

Drive vehicle over 30 km/h (20 MPH) for at least one minute.

↓

Turn ignition switch "OFF".

↓

A

Ground terminal "L" of "DATA LINK CONNECTOR for CONSULT" with a suitable harness.

↓

Turn ignition switch "ON" while grounding terminal "L".
Do not depress brake pedal.

↓

B

After 3.6 seconds, the warning lamp starts flashing to indicate the malfunction code No. (See NOTE.)

↓

Verify the location of the malfunction with the malfunction code chart. Refer to BR-57. Then make the necessary repairs following the diagnostic procedures.

↓

After the malfunctions are repaired, erase the malfunction codes stored in the control unit. Refer to BR-57.

↓

Rerun the self-diagnostic results mode to verify that the malfunction codes have been erased.

↓

C

Disconnect the check terminal from the ground. The self-diagnostic results mode is now complete.

↓

Ⓐ

NOTE: The indication terminates after five minutes. However, when the ignition switch is turned from "OFF" to "ON", the indication starts flashing again.

Self-diagnosis (Except Europe) (Cont'd)

Ⓐ

Check warning lamp for deactivation after driving vehicle over 30 km/h (20 MPH) for at least one minute.

After making certain that warning lamp does not come on, test the ABS in a safe area to verify that it functions properly.

HOW TO READ SELF-DIAGNOSTIC RESULTS (Malfunction codes)

- Determine the code No. by counting the number of times the warning lamp flashes on and off.
- When several malfunctions occur at one time, up to three code numbers can be stored; the latest malfunction will be indicated first.
- The indication begins with the start code 12. After that a maximum of three code numbers appear in the order of the latest one first. The indication then returns to the start code 12 to repeat (the indication will stay on for five minutes at the most).
- The malfunction code chart is given on the next page.

Example: Code No. 32 REAR SENSOR SHORT-CIRCUIT

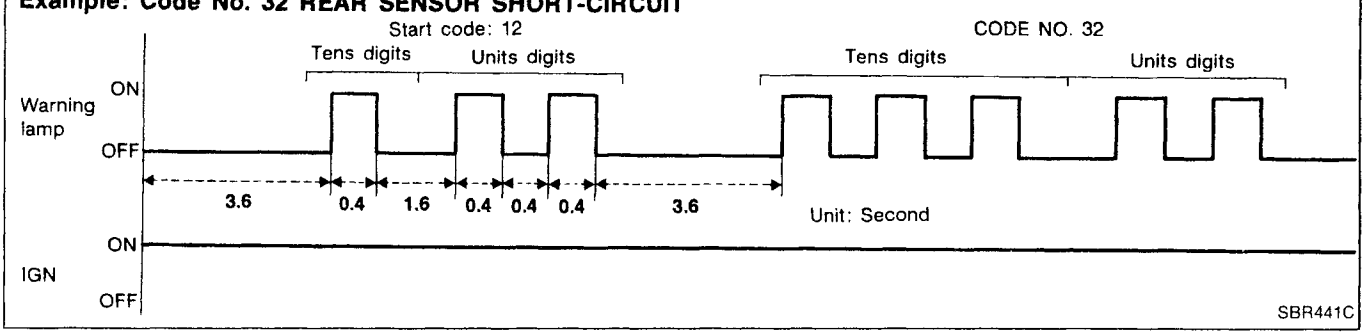

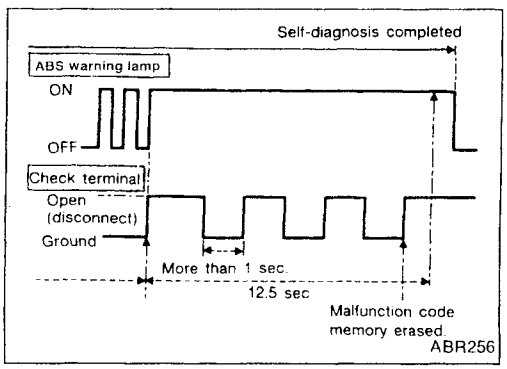

HOW TO ERASE SELF-DIAGNOSTIC RESULTS (Malfunction codes)

1. Disconnect the check terminal from ground (ABS warning lamp will stay lit).
2. Within 12.5 seconds, ground the check terminal 3 times. Each terminal ground must last more than 1 second. The ABS warning lamp goes out after the erase operation has been completed.
3. Perform self-diagnosis again. Refer to BR-56. Only the start code should appear, no malfunction codes.

MALFUNCTION CODE/SYMPTOM CHART

Refer to BR-55.

CONSULT

CONSULT APPLICATION TO ABS

ITEM	SELF-DIAGNOSTIC RESULTS	DATA MONITOR	ACTIVE TEST
Front right wheel sensor	X	X	—
Front left wheel sensor	X	X	—
Rear right wheel sensor	X	X	—
Rear left wheel sensor	X	X	—
Stop lamp switch	—	X	—
Front right inlet solenoid valve	X	X	X
Front right outlet solenoid valve	X	X	X
Front left inlet solenoid valve	X	X	X
Front left outlet solenoid valve	X	X	X
Rear right inlet solenoid valve	X	X	X
Rear left inlet solenoid valve	X	X	X
Rear right outlet solenoid valve	X	X	X
Rear left outlet solenoid valve	X	X	X
Actuator solenoid valve relay	X	X	—
Actuator motor relay (ABS MOTOR is shown on the Data Monitor screen.)	X	X	X
ABS warning lamp	—	X	—
Battery voltage	X	X	—

X: Applicable
—: Not applicable

ECU part number mode

Ignore the ECU part number displayed in the ECU PART NUMBER MODE. Refer to parts catalog to order the ECU.

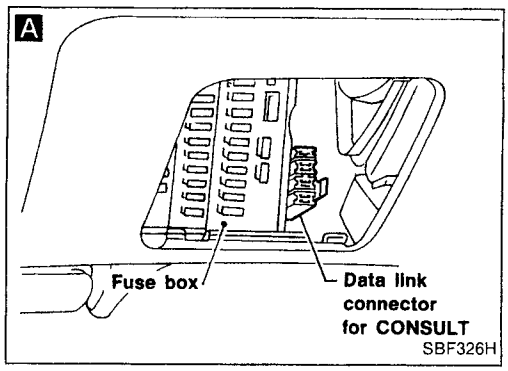

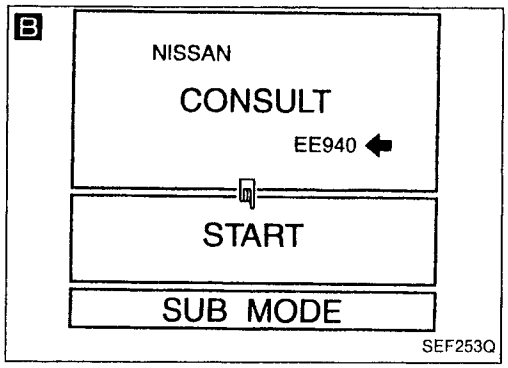

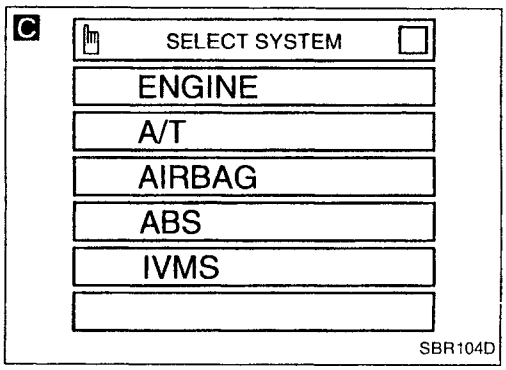

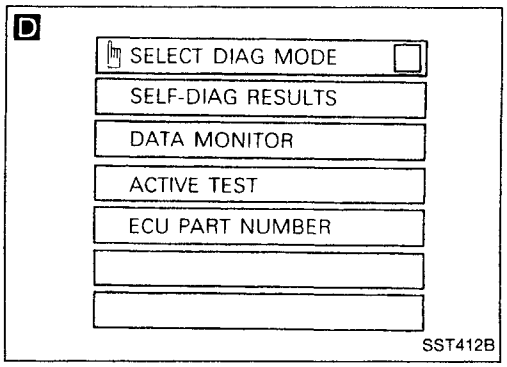

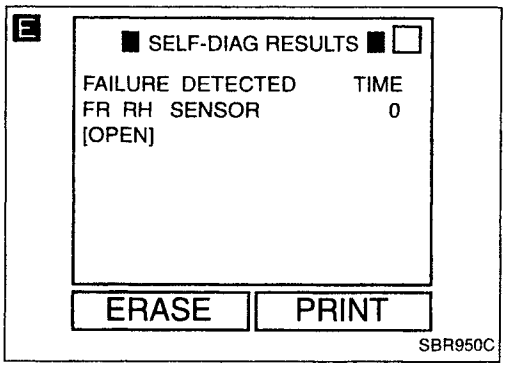

CONSULT Inspection Procedure

SELF-DIAGNOSIS PROCEDURE

A

1) Turn ignition switch OFF.
2) Connect CONSULT to Data Link Connector for CONSULT.

↓

1) Start engine.
2) Drive vehicle over 30 km/h (20 MPH) for at least one minute.

↓

B 1) Stop vehicle with engine running and touch "START" on CONSULT screen.

Program card
AE950: For Australia
EE940: Except Australia

C 2) Touch "ABS".

D 3) Touch "SELF-DIAG RESULTS".

- The screen shows the detected malfunction and the times of ignition switch ON and OFF after it occurred.

↓

Make the necessary repairs following the diagnostic procedures.

↓

E

After the malfunctions are repaired, erase the self-diagnostic results stored in the control unit by touching "ERASE".

↓

Check warning lamp for deactivation after driving vehicle over 30 km/h (20 MPH) for at least one minute.

↓

Test the ABS in a safe area to verify that it functions properly.

Note: "SELF-DIAG RESULTS" screen shows the detected malfunction and the times of ignition switch ON and OFF after it occurred.

BR

SELF-DIAGNOSTIC RESULTS MODE

Diagnostic item	Diagnostic item is detected when ...	Diagnostic procedure
FR RH SENSOR [OPEN]	• Circuit for front right wheel sensor is open. (An abnormally high input voltage is entered.)	4
FR LH SENSOR [OPEN]	• Circuit for front left wheel sensor is open. (An abnormally high input voltage is entered.)	4
RR RH SENSOR [OPEN]	• Circuit for rear right sensor is open. (An abnormally high input voltage is entered.)	4
RR LH SENSOR [OPEN]	• Circuit for rear left sensor is open. (An abnormally high input voltage is entered.)	4
FR RH SENSOR [SHORT]	• Circuit for front right wheel sensor is shorted. (An abnormally low input voltage is entered.)	4
FR LH SENSOR [SHORT]	• Circuit for front left wheel sensor is shorted. (An abnormally low input voltage is entered.)	4
RR RH SENSOR [SHORT]	• Circuit for rear right sensor is shorted. (An abnormally low input voltage is entered.)	4
RR LH SENSOR [SHORT]	• Circuit for rear left sensor is shorted. (An abnormally low input voltage is entered.)	4
ABS SENSOR [ABNORMAL SIGNAL]	• Teeth damage on sensor rotor or improper installation of wheel sensor. (Abnormal wheel sensor signal is entered.)	4
FR RH IN ABS SOL [OPEN]	• Circuit for front right inlet solenoid valve is open. (An abnormally low output voltage is entered.)	3
FR LH IN ABS SOL [OPEN]	• Circuit for front left inlet solenoid valve is open. (An abnormally low output voltage is entered.)	3
RR RH IN ABS SOL [OPEN]	• Circuit for rear right inlet solenoid valve is open. (An abnormally low output voltage is entered.)	3
RR LH IN ABS SOL [OPEN]	• Circuit for rear left inlet solenoid valve is open. (An abnormally low output voltage is entered.)	3
FR RH IN ABS SOL [SHORT]	• Circuit for front right inlet solenoid valve is shorted. (An abnormally high output voltage is entered.)	3
FR LH IN ABS SOL [SHORT]	• Circuit for front left inlet solenoid valve is shorted. (An abnormally high output voltage is entered.)	3
RR RH IN ABS SOL [SHORT]	• Circuit for rear right inlet solenoid valve is shorted. (An abnormally high output voltage is entered.)	3
RR LH IN ABS SOL [SHORT]	• Circuit for rear left inlet solenoid valve is shorted. (An abnormally high output voltage is entered.)	3
FR RH OUT ABS SOL [OPEN]	• Circuit for front right outlet solenoid valve is open. (An abnormally low output voltage is entered.)	3
FR LH OUT ABS SOL [OPEN]	• Circuit for front left outlet solenoid valve is open. (An abnormally low output voltage is entered.)	3
RR RH OUT ABS SOL [OPEN]	• Circuit for rear right outlet solenoid valve is open. (An abnormally low output voltage is entered.)	3
RR LH OUT ABS SOL [OPEN]	• Circuit for rear left outlet solenoid valve is open. (An abnormally low output voltage is entered.)	3
FR RH OUT ABS SOL [SHORT]	• Circuit for front right outlet solenoid valve is shorted. (An abnormally high output voltage is entered.)	3
FR LH OUT ABS SOL [SHORT]	• Circuit for front left outlet solenoid valve is shorted. (An abnormally high output voltage is entered.)	3
RR RH OUT ABS SOL [SHORT]	• Circuit for rear right outlet solenoid valve is shorted. (An abnormally high output voltage is entered.)	3
RR LH OUT ABS SOL [SHORT]	• Circuit for rear left outlet solenoid valve is shorted. (An abnormally high output voltage is entered.)	3
ABS ACTUATOR RELAY [FAILURE]	• Actuator solenoid valve relay is ON, even control unit sends off signal. • Actuator solenoid valve relay is OFF, even control unit sends on signal.	6
ABS MOTOR [FAILURE]	• Circuit for actuator motor is open or shorted. • Actuator motor relay is stuck.	5
BATTERY VOLT [VB-LOW]	• Power source voltage supplied to ABS control unit is abnormally low.	7
CONTROL UNIT	• Function of calculation in ABS control unit has failed.	8

CONSULT Inspection Procedure (Cont'd)

DATA MONITOR PROCEDURE

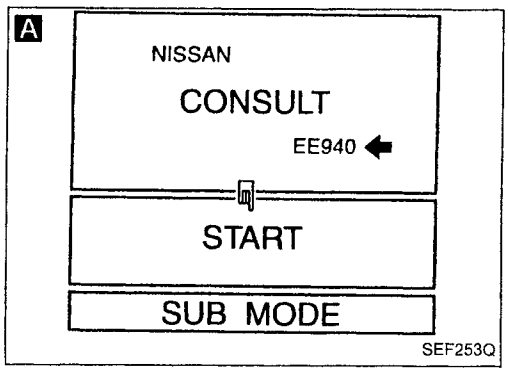

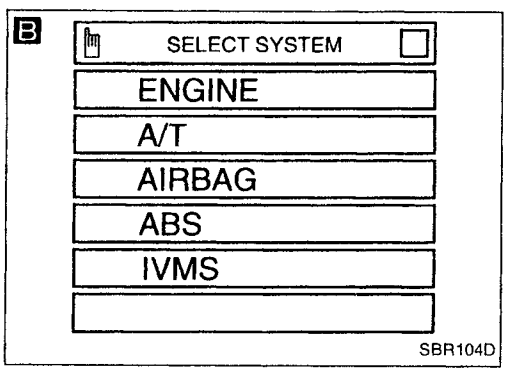

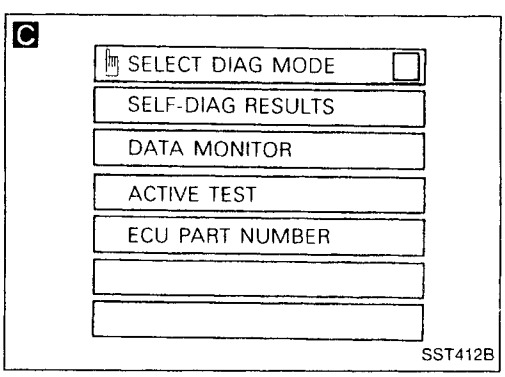

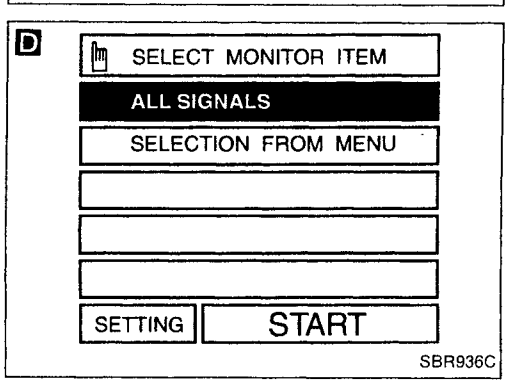

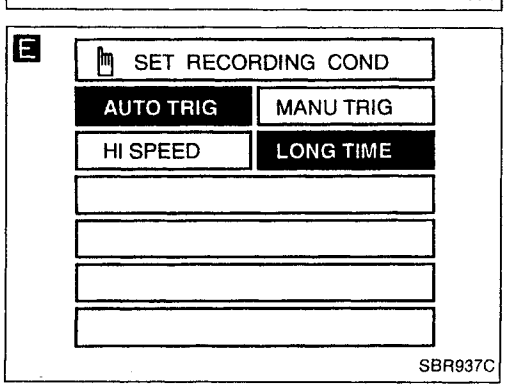

1) Turn ignition switch OFF.
2) Connect CONSULT to Data Link Connector for CONSULT.
3) Turn ignition switch ON.

↓

A 1) Touch "START" on CONSULT screen.
B 2) Touch "ABS".
C 3) Touch "DATA MONITOR".

↓

D 1) Touch "SETTING" on "SELECT MONITOR ITEM" screen.
E 2) Touch "LONG TIME" on "SET RECORDING COND" screen.
D 3) Touch "START" on "SELECT MONITOR ITEM".

BR

CONSULT Inspection Procedure (Cont'd)

ACTIVE TEST PROCEDURE

- When conducting Active test, vehicle must be stationary.
- When ABS warning lamp stays on, never conduct Active test.

1) Turn ignition switch OFF.
2) Connect CONSULT to Data Link Connector for CONSULT.
3) Start engine.

↓

A 1) Touch "START" on CONSULT screen.
B 2) Touch "ABS".
C 3) Touch "ACTIVE TEST".

↓

D 1) Select active test item by touching screen.
E 2) Touch "START".

↓

Carry out the active test by touching screen key.

A

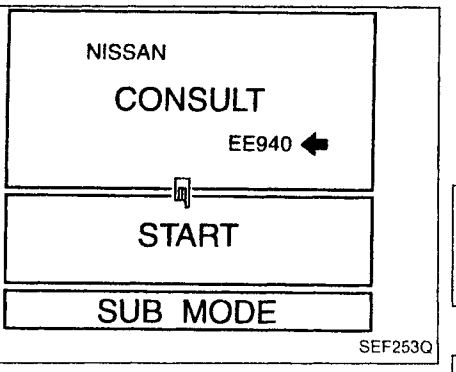

SEF253Q

B

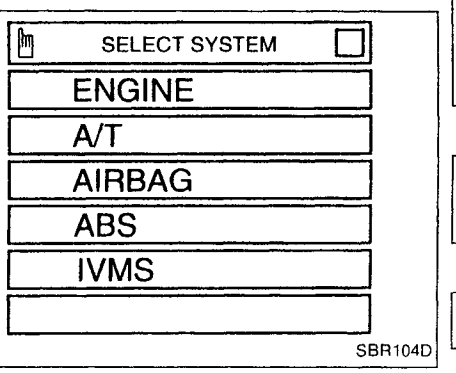

SBR104D

C

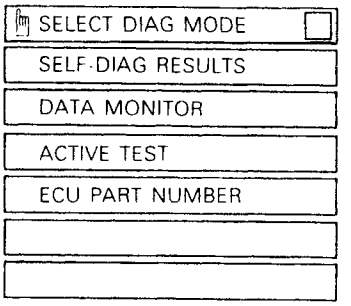

SST412B

D

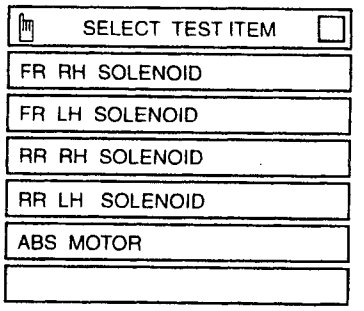

SBR976C

E

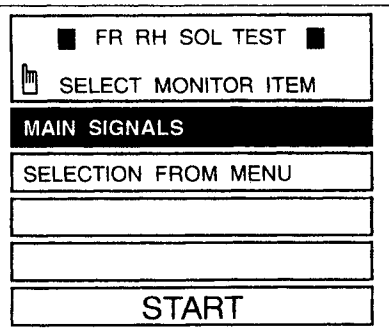

SBR934C

DATA MONITOR MODE

MONITOR ITEM	CONDITION	SPECIFICATION
FR RH SENSOR FR LH SENSOR REAR RH SENSOR REAR LH SENSOR	Drive vehicle. (Each wheel is rotating.)	Almost the same speed as speedometer.
STOP LAMP SW	Brake is depressed.	Depress the pedal: ON Release the pedal: OFF
FR RH IN SOL FR RH OUT SOL FR LH IN SOL FR LH OUT SOL RR RH IN SOL RR RH OUT SOL RR LH IN SOL RR LH OUT SOL	Engine is running.	Operating conditions for each solenoid valve are indicated. ABS is not operating: OFF
ACTUATOR RLY	Ignition switch is ON or engine is running.	Ignition switch ON (Engine stops): OFF Engine running: ON
MOTOR RELAY		ABS is not operating: OFF ABS is operating: ON
WARNING LAMP		Warning lamp is turned on: ON Warning lamp is turned off: OFF
BATTERY VOLT		Power supply voltage for control unit

ACTIVE TEST MODE

TEST ITEM	CONDITION	JUDGEMENT		
FR RH SOLENOID FR LH SOLENOID RR RH SOLENOID RR LH SOLENOID	Engine is running.	Brake fluid pressure control operation		
			IN SOL	OUT SOL
		UP (Increase):	OFF	OFF
		KEEP (Hold):	ON	OFF
		DOWN (Decrease):	ON	ON
ABS MOTOR		ABS actuator motor ON: Motor runs OFF: Motor stops		

Note: Active test will automatically stop ten seconds after the test starts. (LIMIT SIGNAL monitor shows ON.)

BR

Component Parts and Harness Connector Location

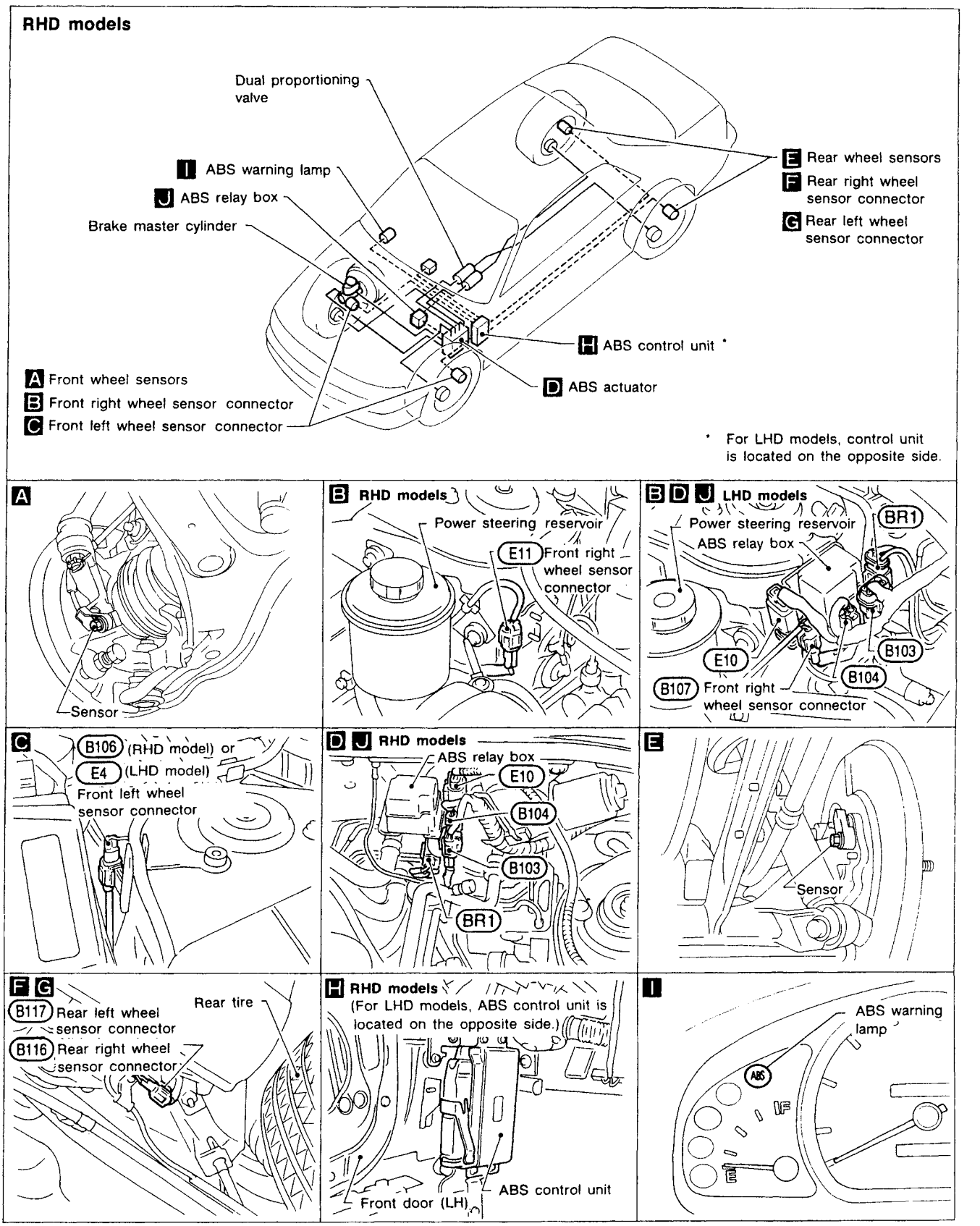

SBR047DA

Preliminary Check

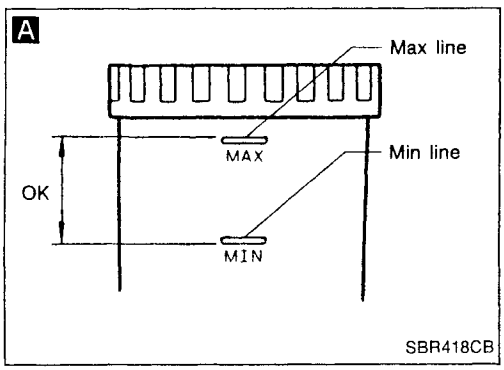

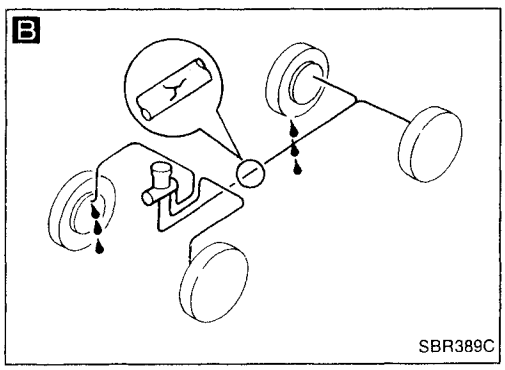

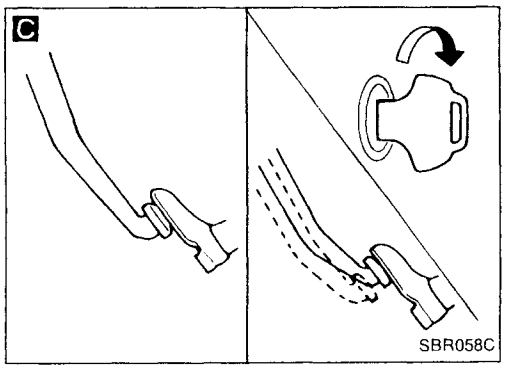

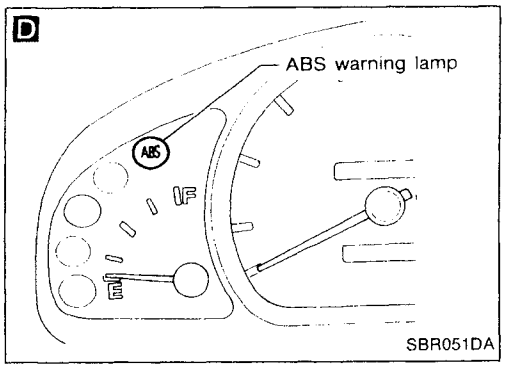

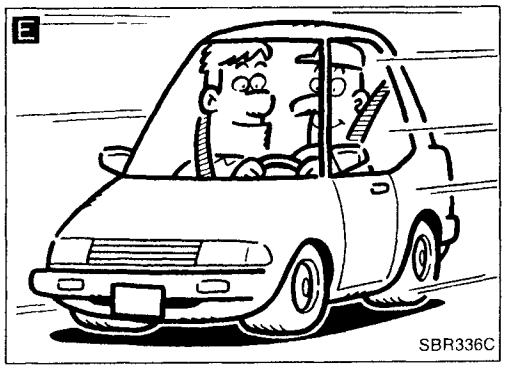

A

Check brake fluid level in reservoir tank.

Low fluid level may indicate brake pad wear or leakage from brake line.

↓

B

Check brake line for leakage. → NG → Repair.

OK ↓

C

Check brake booster for operation and air tightness. Refer to BR-15. → NG → Replace.

OK ↓

Check brake pads and rotor. Refer to BR-19, 29. → NG → Replace.

OK ↓

A

Check brake fluid level in reservoir tank. → NG → Fill up brake fluid.

OK ↓

D

Check warning lamp activation. When ignition switch is turned on, warning lamp turns on. → NG → Check fuse, warning lamp bulb and warning lamp circuit.

OK ↓

Check warning lamp for deactivation. When ignition switch is turned on, warning lamp turns on, then deactivates after 1 second. → NG → Go to Self-diagnosis, BR-56.

OK ↓

E

Drive vehicle at 30 km/h (20 MPH) for at least one minute.

↓

Ensure warning lamp remains off while driving. → NG → Go to Self-diagnosis, BR-56.

OK ↓

END

BR

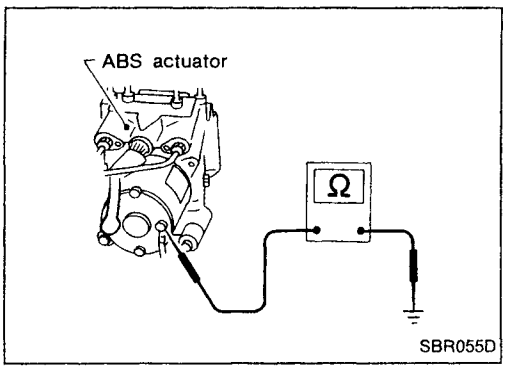

Ground Circuit Check

ACTUATOR MOTOR GROUND

- Check resistance between actuator motor ground terminal and body ground.
  Resistance: 0Ω

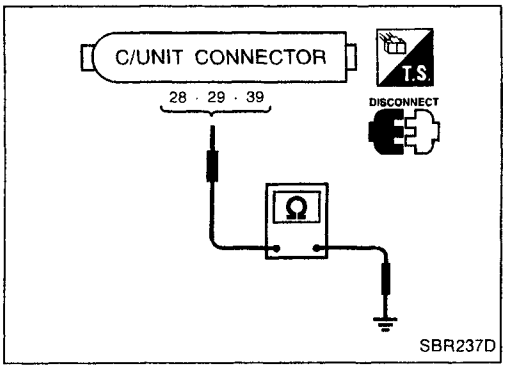

CONTROL UNIT GROUND

- Check resistance between the terminals and ground.
  Resistance: 0Ω

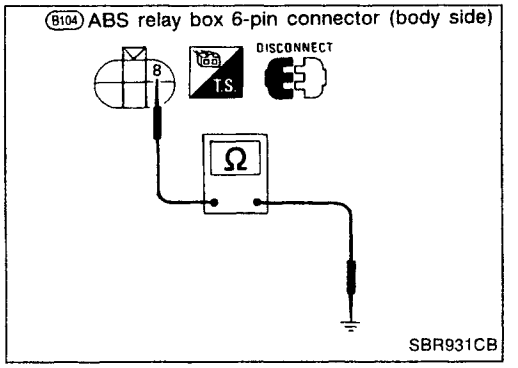

ABS RELAY BOX GROUND

- Check resistance between ABS relay box harness 6-pin connector (body side) terminal ⑧ and ground.
  Resistance: 0Ω

Circuit Diagram for Quick Pinpoint Check

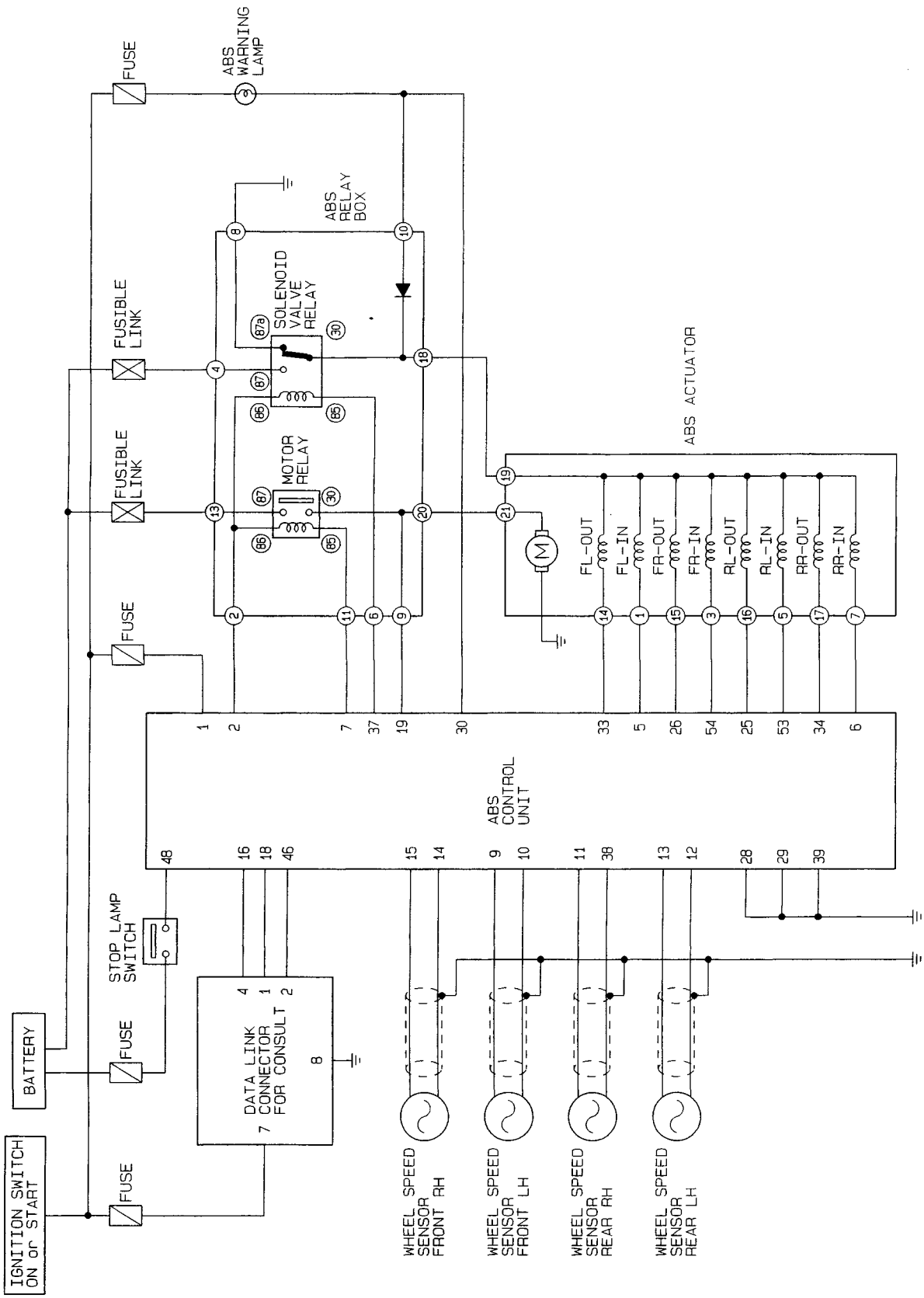

BR

HBR001

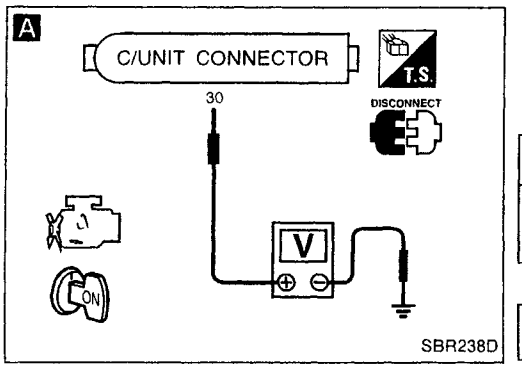

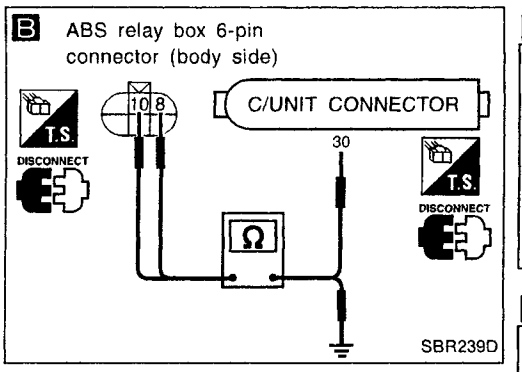

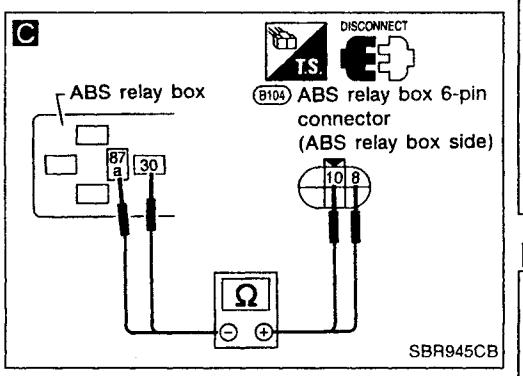

Diagnostic Procedure 1 (Not self-diagnostic item)

Warning lamp does not come on when ignition switch is turned on.

WARNING LIGHT CIRCUIT CHECK

Check 10A fuse [8] for warning lamp.
For fuse layout, refer to BR-45.

NG → Replace fuse.

OK ↓

Check warning lamp bulb.

NG → Replace bulb.

OK ↓

A

1. Install 10A fuse and bulb.
2. Disconnect connectors from control unit and ABS relay box.
3. Check voltage between control unit connector terminal ⑳ and ground after turning ignition switch "ON".
   Battery voltage should exist after turning ignition switch "ON".

NG → Repair harness and connectors.

OK ↓

B

- Check continuity between ABS relay box 6-pin connector (body side) and control unit terminals.

ABS relay box	Control unit
⑩	⑳
⑧	Ground

Continuity should exist.

NG → Repair harness and connectors.

OK ↓

C

1. Remove solenoid valve relay.
2. Check continuity between ABS relay box 6-pin connector (ABS relay box side) and ABS relay box terminals.

ABS relay box connector	ABS relay box terminals
⑩ ⊕	⑳ ⊖
⑧	87a

Continuity should exist.
Note: Pay attention to tester polarity*.

NG → Replace ABS relay box.

OK ↓

SOLENOID VALVE RELAY CHECK

Refer to SOLENOID VALVE RELAY in Electrical Components Inspection, BR-85.

NG → Replace solenoid valve relay.

OK ↓

Go to Diagnostic Procedure 7, BR-81.

***: Specifications may vary depending on the type of tester. Before performing this inspection, refer to the instruction manual of the tester.**

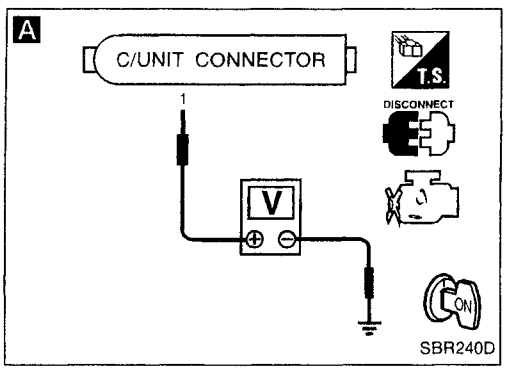

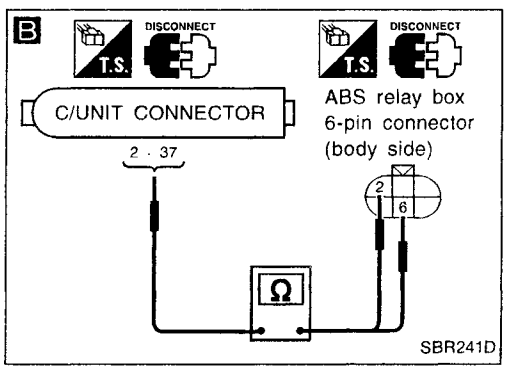

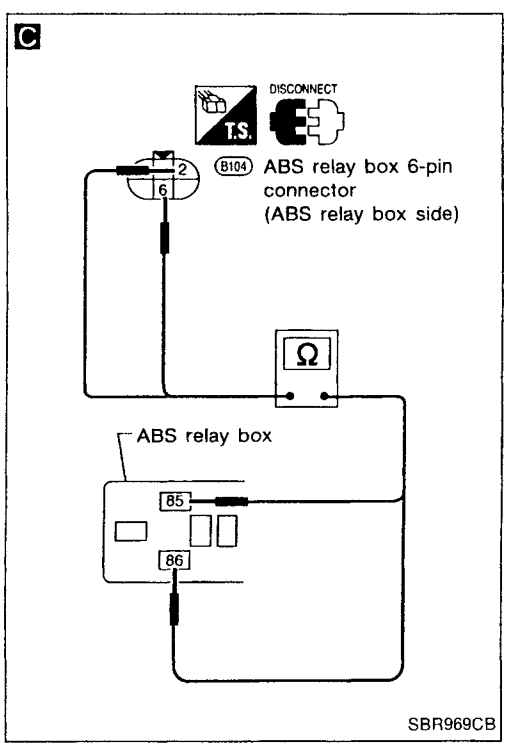

Diagnostic Procedure 2 (Not Self-diagnostic item)

Warning lamp stays on when ignition switch is turned on.

CONTROL UNIT POWER SUPPLY CIRCUIT

Check 7.5A fuse [12] for control unit.
For fuse layout, refer to BR-45.

NG → (Go to Ⓑ on BR-71.)

OK ↓

A

1. Disconnect connector from control unit.
2. Check voltage between control unit connector terminal ① and ground after turning ignition switch "ON".
Battery voltage should exist.

NG → Repair harness and connector.

OK ↓

B

SOLENOID VALVE RELAY COIL POWER SUPPLY CIRCUIT

1. Turn ignition switch "OFF". Disconnect ABS relay box 6-pin connector.
2. Check continuity between control unit connector terminals and ABS relay box 6-pin connector (body side) terminals.

Control unit	ABS relay box
②	②
㊲	⑥

Continuity should exist.

NG → Repair harness and connector.

OK ↓

C

CIRCUIT CHECK

1. Disconnect solenoid valve relay.
2. Check continuity between ABS relay box 6-pin connector (ABS relay box side) terminals and solenoid valve relay box terminals.

ABS relay box connector	ABS relay box terminals
②	㊻
⑥	㊺

Continuity should exist.

NG → Replace ABS relay box.

OK ↓

SOLENOID VALVE RELAY CHECK

Refer to SOLENOID VALVE RELAY in Electrical Components Inspection, BR-85.

NG → Replace solenoid valve relay.

OK ↓

Ⓐ

(Go to next page.)

BR

Diagnostic Procedure 2 (Not Self-diagnostic item) (Cont'd)

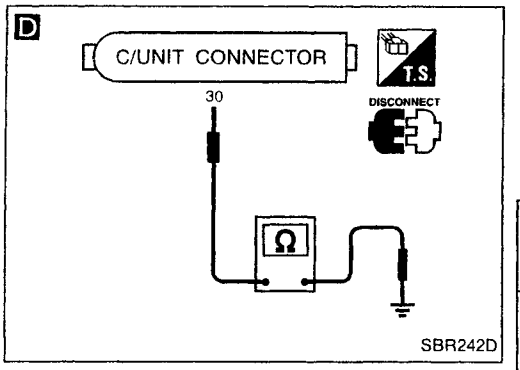

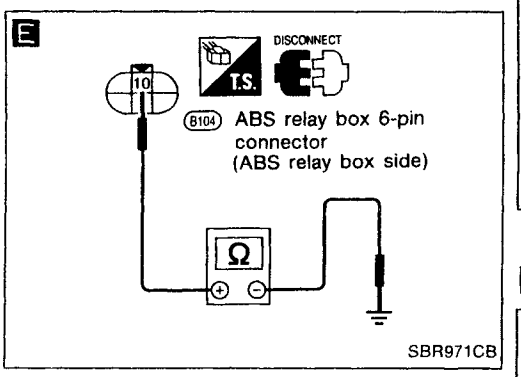

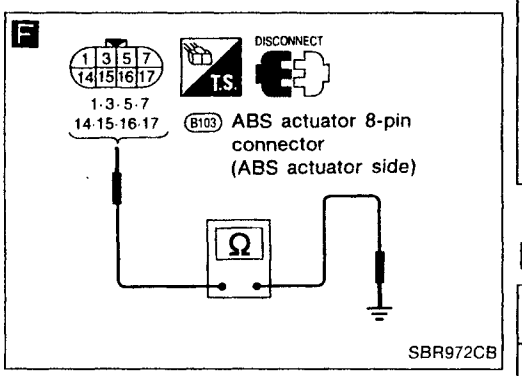

Ⓐ

D

GROUND-SHORT CHECK FOR WARNING LAMP CIRCUIT.

1. Turn ignition switch "OFF".
2. Disconnect connectors from control unit and ABS relay box 6-pin connector.
3. Check continuity between control unit connector terminal ㉚ and body ground.
   Continuity should not exist.

NG → Repair harness and connector.

OK ↓

E

1. Disconnect actuator ground terminal and 6-pin connector.
2. Check continuity between ABS relay box 6-pin connector (ABS relay box side) terminal ⑩ and body ground.
   Continuity should not exist.

Note: Pay attention to tester polarity*.

NG → Replace ABS relay box.

OK ↓

F

SOLENOID VALVE CIRCUIT

1. Disconnect ABS actuator 8-pin connector.
2. Check continuity between each ABS actuator 8-pin connector (ABS actuator side) terminals and body ground.
   Continuity should not exist.

NG → Replace ABS actuator.

OK ↓

Check control unit pin terminals for damage or the connection of control unit harness connector.
Reconnect control unit harness connector. Then retest.

***: Specifications may vary depending on the type of tester. Before performing this inspection, refer to the instruction manual of the tester.**

Diagnostic Procedure 2 (Not Self-diagnostic item) (Cont'd)

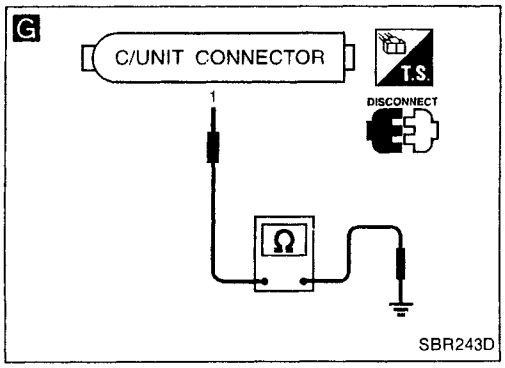

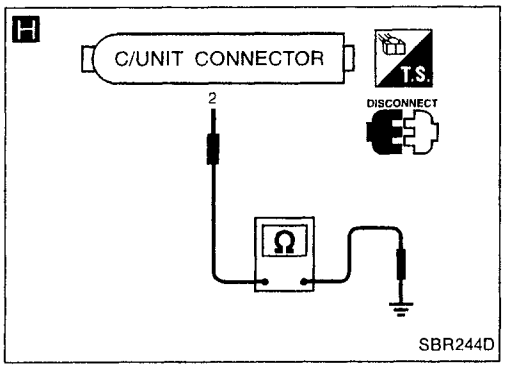

Ⓑ

Replace 7.5A fuse.
Does the fuse blow out when ignition switch is turned "ON"?

No → Inspection end

Yes ↓

G

CONTROL UNIT POWER SUPPLY CIRCUIT

1. Disconnect control unit connector.
2. Check continuity between control unit connector terminal ① and body ground.
   Continuity should not exist.

NG → Repair harness and connector.

OK ↓

H

Check continuity between control unit connector terminal ② and body ground.
Continuity should not exist.

NG → Repair harness and connector.

OK ↓

Check control unit pin terminals for damage or the connection of control unit harness connector.
Reconnect control unit harness connector. Then retest.

BR

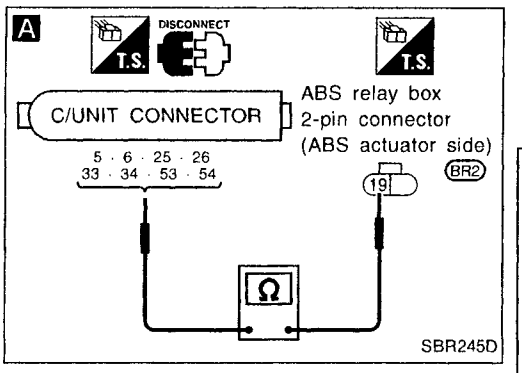

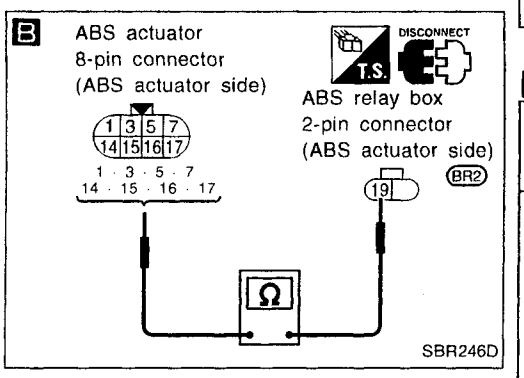

Diagnostic Procedure 3

ABS ACTUATOR SOLENOID VALVE (Malfunction code No. 41, 45, 51, 55, 42, 46, 52, 56)

1. Disconnect connectors from control unit, ABS actuator and ABS relay box. Check terminals for damage or loose connections. Then reconnect connectors.
2. Carry out self-diagnosis again.
Does warning lamp activate again?

No → Inspection end

Yes ↓

A

ABS ACTUATOR SOLENOID VALVE CHECK

OK → Ⓐ (Go to next page.)

1. Disconnect connectors from control unit and ABS relay box.
2. Check resistance between control unit connector terminals and ABS relay box 2-pin connector (BR2) (ABS actuator side) terminal.

Code No.	Control unit	ABS relay box	Resistance
41	26	19	4.4 - 6.0Ω
45	33	19	
51	34	19	
55	25	19	
42	54	19	8.5 - 11.0Ω
46	5	19	
52	6	19	
56	53	19	

NG ↓

B

1. Disconnect ABS actuator 8-pin connector.
2. Check resistance between ABS actuator 8-pin connector (ABS actuator side) terminals and ABS relay box 2-pin connector (BR2) (ABS actuator side) terminal.

OK → Repair harness and connector between control unit connector terminal and ABS actuator 8-pin connector terminal.

Code No.	ABS actuator	ABS relay box	Resistance
41	15	19	4.4 - 6.0Ω
45	14	19	
51	17	19	
55	16	19	
42	3	19	8.5 - 11.0Ω
46	1	19	
52	7	19	
56	5	19	

NG ↓

Replace ABS actuator.

Diagnostic Procedure 3 (Cont'd)

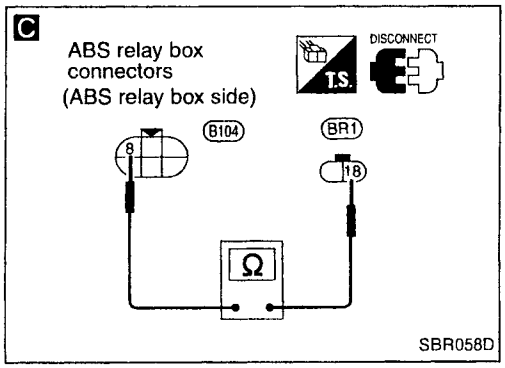

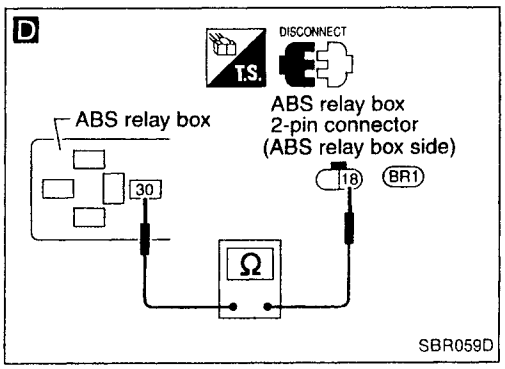

Ⓐ

C

1. Disconnect ABS relay box connectors.
2. Check continuity between ABS relay box 2-pin connector (BR1) (ABS relay box side) terminal ⑱ and 6-pin connector (B104) (ABS relay box side) terminal ⑧.

Continuity should exist.

OK → Go to Diagnostic Procedure 7, BR-81.

NG ↓

D

1. Remove solenoid valve relay.
2. Check continuity between ABS relay box 2-pin connector (BR1) (ABS relay side) terminal ⑱ and ABS relay box terminal ㉚.

Continuity should exist.

NG → Replace ABS relay box.

OK ↓

Go to Diagnostic Procedure 6, BR-79.

BR

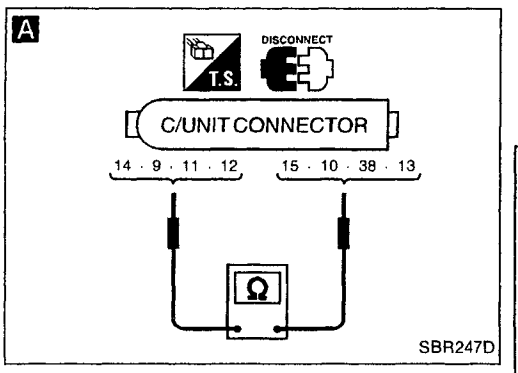

Diagnostic Procedure 4

WHEEL SENSOR OR ROTOR

(Malfunction code No. 21, 22, 25, 26, 31, 32, 35, 36 or 18)

1. Disconnect connectors from control unit and wheel sensor of malfunction code No. Check terminals for damage or loose connections. Then reconnect connectors.
2. Carry out self-diagnosis again.
   Does warning lamp activate again?

No → Inspection end

Yes ↓

A

WHEEL SENSOR ELECTRICAL CHECK

1. Disconnect control unit connector.
2. Check resistance between control unit connector terminals.
   Code No. 21 or 22 (Front RH wheel)
   Terminals ⑭ and ⑮
   Code No. 25 or 26 (Front LH wheel)
   Terminals ⑨ and ⑩
   Code No. 31 or 32 (Rear RH wheel)
   Terminals ⑪ and ㊳
   Code No. 35 or 36 (Rear LH wheel)
   Terminals ⑫ and ⑬
   Resistance: 0.8 - 1.2 kΩ

OK → Ⓐ (See next page.)

NG ↓

Note

CHECK WHEEL SENSOR.

Refer to WHEEL SENSOR in Electrical Components Inspection, BR-85.

NG → Note: Replace wheel sensor.

OK ↓

Note

Repair harness and connectors between control unit connector and wheel sensor connector.

Note: Wheel position should be distinguished by code No. except code No. 18 (sensor rotor).

Diagnostic Procedure 4 (Cont'd)

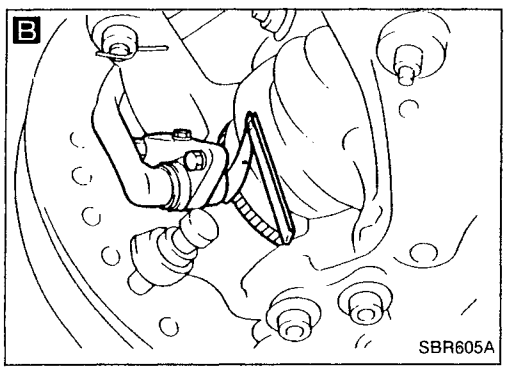

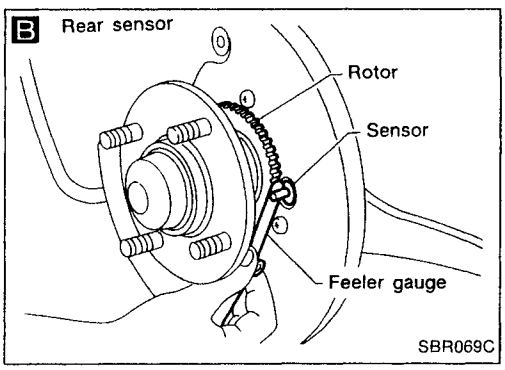

Ⓐ

Note

WHEEL SENSOR MECHANICAL CHECK

Check for inflation pressure, wear and size of each tire.

NG → Note: Adjust tire pressure or replace tire(s).

OK ↓

Note

Check wheel bearing axial end play.

OK ↓

B Note

Check clearance between sensor and rotor.

Clearance:

Front

0.1 - 1.1 mm

(0.004 - 0.043 in)

Rear

0.1 - 1.1 mm

(0.004 - 0.043 in)

NG → Note: Clean sensor fixing portion, or replace sensor.

OK ↓

Note

Check sensor rotor for teeth damage.

NG → Note: Replace sensor rotor.

OK ↓

Check control unit pin terminals for damage or the connection of control unit harness connector.
Reconnect control unit harness connector. Then retest.

Note: Wheel position should be distinguished by code No. except code No. 18 (sensor rotor).

BR

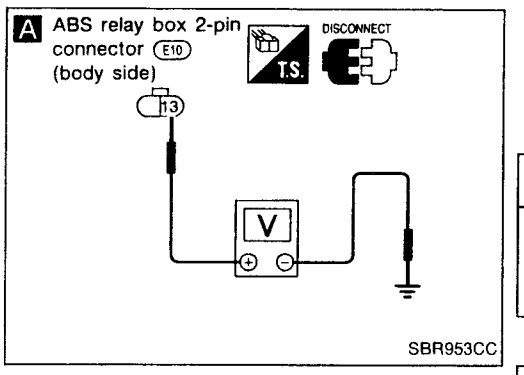

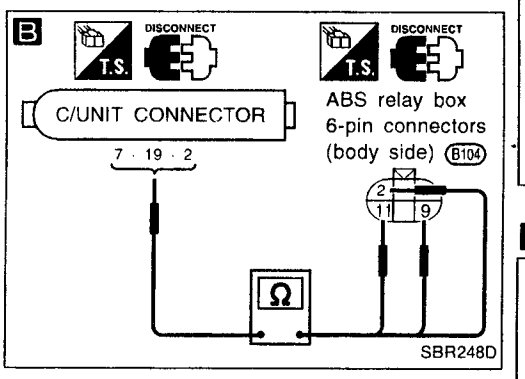

Diagnostic Procedure 5

MOTOR RELAY OR MOTOR

(Malfunction code No. 61)

MOTOR POWER SUPPLY CIRCUIT

Check fusible link [d] for ABS relay box. For fusible link layout, refer to POWER SUPPLY ROUTING in EL section.

NG → Ⓑ (Skip page.)

OK ↓

1. Disconnect connectors from control unit and ABS actuator. Check terminals for damage or loose connection. Then reconnect connectors.
2. Carry out self-diagnosis again. **Does warning lamp activate again?**

No → Inspection end

Yes ↓

A

1. Disconnect ABS relay box 2-pin connector E10.
2. Check voltage between connector (body side) terminal 13 and ground. **Battery voltage should exist.**

NG → Repair harness and connectors.

OK ↓

B

CIRCUIT CHECK

1. Disconnect ABS relay box 6-pin connector and control unit connector.
2. Check continuity between control unit connector terminals and ABS relay box 6-pin connector B104 (body side) terminals.

Control unit	ABS relay box
7	11
19	9
2	2

Continuity should exist.

NG → Repair harness and connectors.

OK ↓

MOTOR RELAY CHECK

Refer to MOTOR RELAY in Electrical Components Inspection, BR-85.

NG → Replace motor relay.

OK ↓

ACTUATOR MOTOR GROUND CHECK

Refer to ACTUATOR MOTOR GROUND in Ground Circuit Check, BR-66.

NG → Repair harness and terminals.

OK ↓

Ⓐ

(Go to next page.)

Diagnostic Procedure 5 (Cont'd)

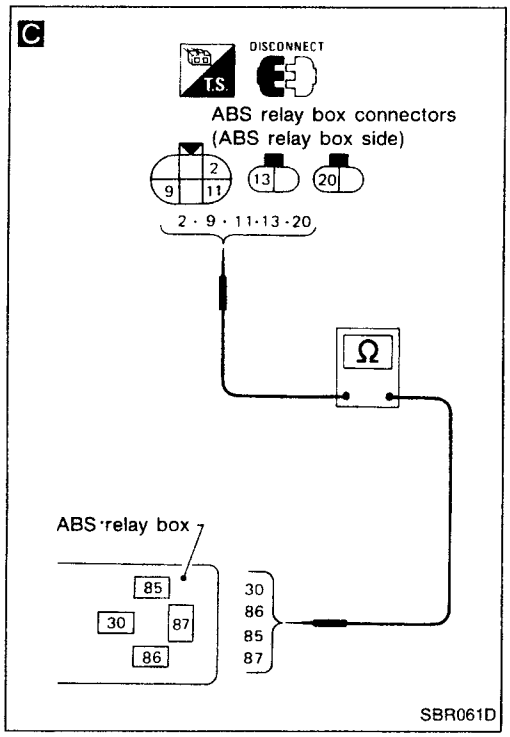

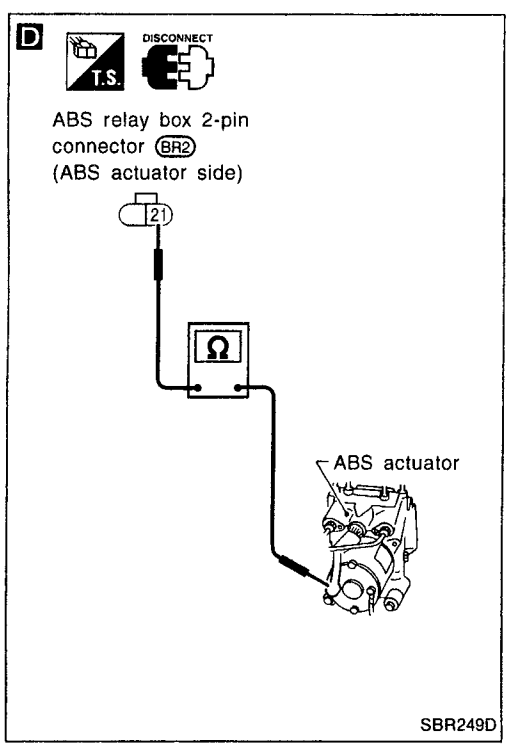

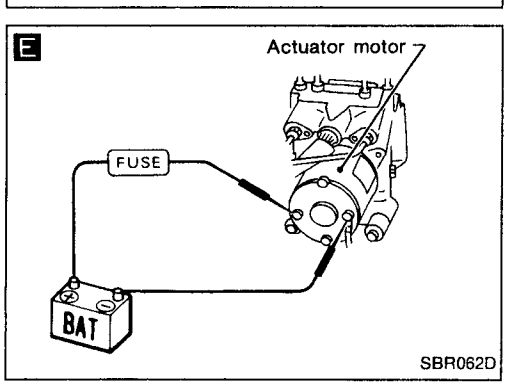

Ⓐ

C

MOTOR RELAY CIRCUIT

1. Remove motor relay.
2. Check continuity between ABS relay box connectors (ABS relay box side) and ABS relay box terminals.

ABS relay box connector	ABS relay box terminal
2	86
11	85
9	30
Connector E10 13	87
Connector BR1 20	30

Continuity should exist.

NG → Replace ABS relay box.

OK ↓

D

Check continuity between ABS relay box 2-pin connector BR2 (ABS actuator side) terminal 21 and actuator motor positive terminal.
Continuity should exist.

NG → Repair harness and connectors.

OK ↓

E

MOTOR CHECK

1. Disconnect actuator motor terminals.
2. Apply battery voltage to motor terminals.
   Motor should operate.
   Do not connect wire for more than 5 seconds.

NG → Replace ABS actuator.

OK ↓

Go to Diagnostic Procedure 7, BR-81.

BR

Diagnostic Procedure 5 (Cont'd)

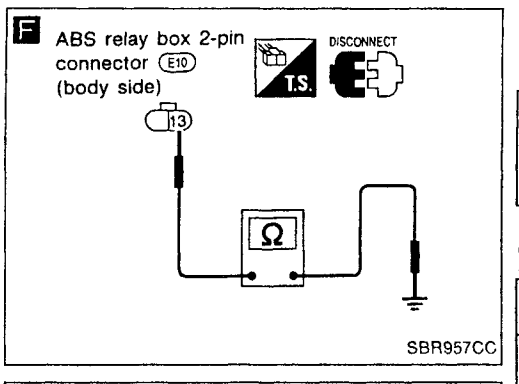

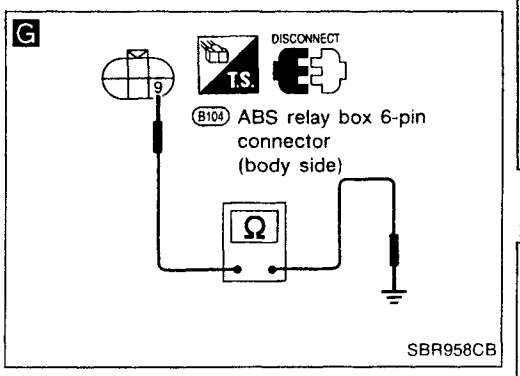

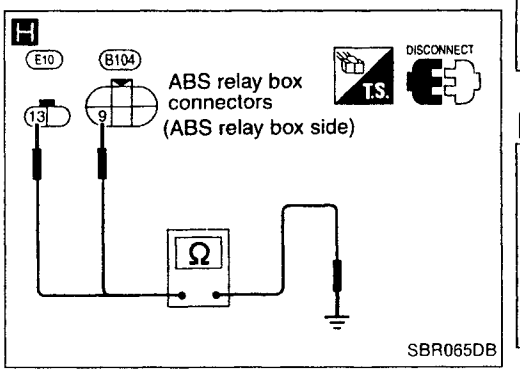

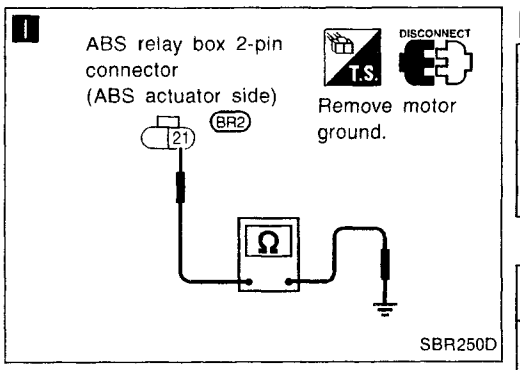

Ⓑ

Replace fusible link.
Does the fusible link blow out when ignition switch is turned "ON"?

No → Inspection end

Yes ↓

F

MOTOR POWER SUPPLY CIRCUIT

1. Disconnect battery cable and ABS relay box 2-pin connector (E10).
2. Check continuity between ABS relay box 2-pin connector (E10) (body side) terminal ⑬ and ground.
Continuity should not exist.

NG → Repair harness and connector.

OK ↓

G

1. Disconnect ABS relay box 6-pin connector and control unit connector.
2. Check continuity between ABS relay box 6-pin connector (B104) (body side) terminal ⑨ and ground.
Continuity should not exist.

NG → Repair harness and connector.

OK ↓

H

Check continuity between ABS relay box 6-pin connector (ABS relay box side) terminal ⑨ and ground, 2-pin connector (E10) (ABS relay box side) terminal ⑬ and ground.
Continuity should not exist.

NG → Replace ABS relay box.

OK ↓

I

1. Remove motor ground.
2. Check continuity between ABS relay box 2-pin connector (BR2) (ABS actuator side) terminal ㉑ and ground.
Continuity should not exist.

NG → Replace ABS actuator.

OK ↓

MOTOR CHECK

Go to **E** in Diagnostic Procedure 5 (preceding page).

OK ↓

Check control unit pin terminals for damage or the connection of control unit harness connector.
Reconnect control unit harness connector. Then retest.

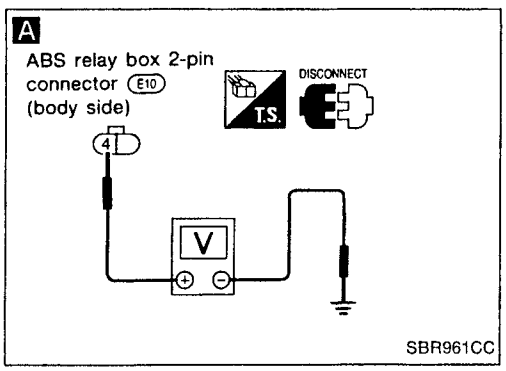

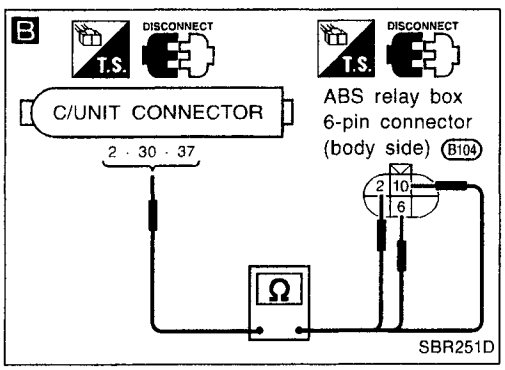

Diagnostic Procedure 6

SOLENOID VALVE RELAY

(Malfunction code No. 63)

SOLENOID VALVE POWER SUPPLY CHECK

Check fusible link [C]. For fusible link layout, refer to POWER SUPPLY ROUTING in EL section.

NG → Ⓐ (See next page.)

OK ↓

1. Disconnect connectors from control unit and ABS actuator. Check terminals for damage or loose connection. Then reconnect connectors.
2. Carry out self-diagnosis again.
Does warning lamp activate again?

No → Inspection end

Yes ↓

GROUND CIRCUIT CHECK

Refer to CONTROL UNIT GROUND and ACTUATOR GROUND in Ground Circuit Check, BR-66.

NG → Repair harness and connectors.

OK ↓

A

SOLENOID VALVE POWER SUPPLY CHECK

1. Disconnect connectors from ABS relay box.
2. Check voltage between ABS relay box 2-pin connector (E10) (body side) terminal ④ and ground.
Battery voltage should exist.

NG → Repair harness and connector.

OK ↓

B

CIRCUIT CHECK

1. Disconnect control unit connector.
2. Check continuity between control unit connector terminals and ABS relay box connector (B104) (body side) terminals.

Control unit	ABS relay box
㊲	⑥
②	②
㉚	⑩

Continuity should exist.

NG → Repair harness and connectors.

OK ↓

SOLENOID VALVE RELAY CHECK

Refer to SOLENOID VALVE RELAY in Electrical Components Inspection, BR-85.

NG → Replace solenoid valve relay.

OK ↓

Ⓑ

(Go to next page.)

BR

Diagnostic Procedure 6 (Cont'd)

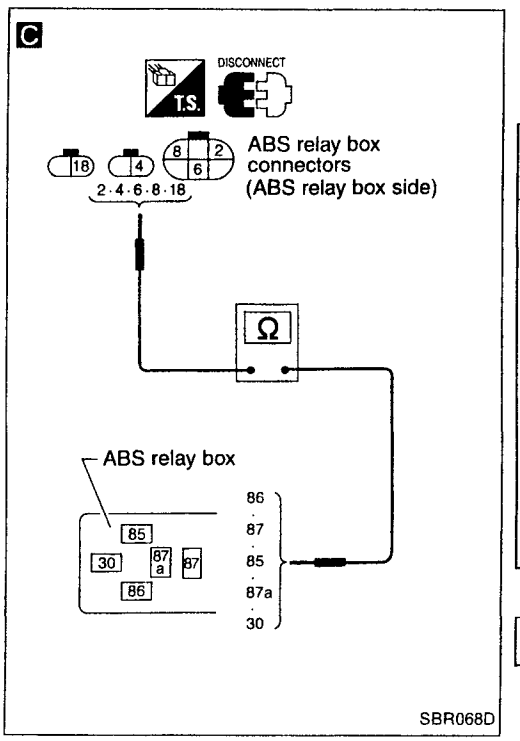

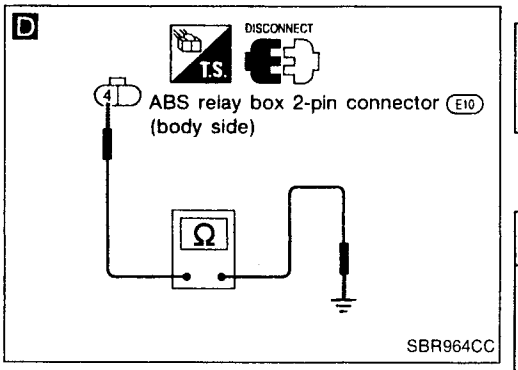

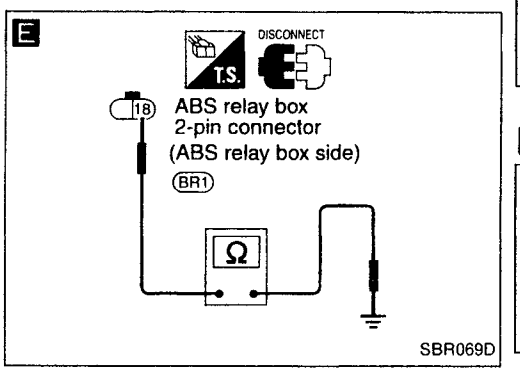

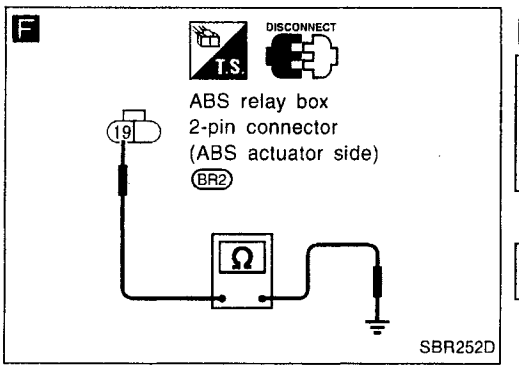

Ⓑ

C

SOLENOID VALVE RELAY CIRCUIT CHECK

Check continuity between ABS relay terminals and ABS relay box connector (ABS relay box side) terminals.

ABS relay box terminal	ABS relay box connector
30	Connector BR1 18
87	Connector E10 4
87a	8
85	6
86	2

Continuity should exist.

NG → • Replace ABS relay box.

OK ↓

Go to diagnostic procedure 3, BR-72.

Ⓐ

Replace fusible link.
Does the fusible link blow out when ignition switch is turned "ON"?

No → Inspection end

Yes ↓

D

RELAY UNIT POWER SUPPLY CIRCUIT

1. Disconnect ABS relay box 2-pin connector E10.
2. Check continuity between ABS relay box 2-pin connector E10 (body side) terminal 4 and ground.
Continuity should not exist.

NG → Repair harness and connector.

OK ↓

E

1. Disconnect ABS relay box connectors and control unit connector.
2. Check continuity between ABS relay box 2-pin connector BR1 (ABS relay box side) terminal 18 and ground.
Continuity should not exist.

NG → Replace ABS relay box.

OK ↓

F

Check continuity between ABS relay box 2-pin connector BR2 (ABS actuator side) terminal 19 and ground.
Continuity should not exist.

NG → Replace ABS actuator.

OK ↓

Go to Diagnostic Procedure 3, BR-72.

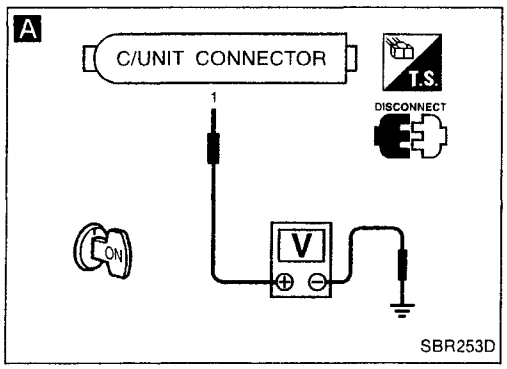

Diagnostic Procedure 7

POWER SUPPLY (Low voltage)

(Malfunction code No. 57)

1. Disconnect control unit connectors. Check terminals for damage or loose connections. Then reconnect connectors.
2. Carry out self-diagnosis again. **Does warning lamp activate again?**

No → Inspection end

Yes ↓

A

CONTROL UNIT POWER SUPPLY CHECK

1. Disconnect control unit connector.
2. Check voltage between control unit connector terminal ① and ground. **Battery voltage should exist when ignition switch is turned ON.**

NG → Ⓐ (See below.)

OK ↓

CONTROL UNIT GROUND CHECK

Refer to CONTROL UNIT GROUND in Ground Circuit Check, BR-66.

NG → Repair harness and connectors.

OK ↓

Check control unit pin terminals for damage or the connection of control unit harness connector.
Reconnect control unit harness connector. Then retest.

Ⓐ ↓

Check 7.5A fuse [12] . Refer to POWER SUPPLY ROUTING in EL section.

NG → Replace fuse.

OK ↓

Check continuity between battery and control unit connector terminal ①.

NG → Repair harness and connectors.

OK ↓

Check battery. Refer to BATTERY in EL section.

BR

Diagnostic Procedure 8

CONTROL UNIT

(Malfunction code No. 71)

Carry out self-diagnosis after erasing self-diagnostic results, BR-56.

↓

Does warning lamp indicate code No. 71 again?

→ Yes → Replace control unit.

↓ No

Inspect the system according to the code No.

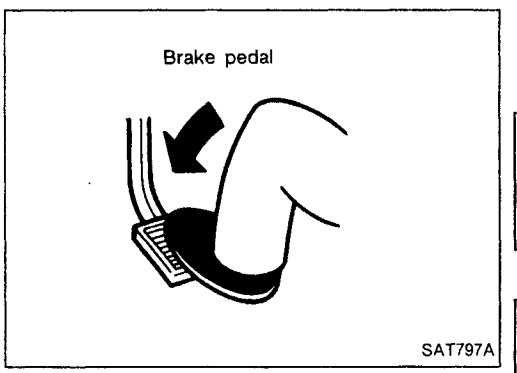

Diagnostic Procedure 9

SYMPTOM: Pedal vibration and noise

1. Apply brake.
2. Start engine.
3. Does the symptom appear only when engine is started?

→ Yes → Carry out self-diagnosis. Refer to BR-53 (Europe) or BR-56 (Except Europe).

↓ No

Does the symptom appear when electrical equipment switches (such as headlamp) are operated?

→ No → Go to **B** in Diagnostic Procedure 11, BR-83.

↓ Yes

Check wheel sensor shield ground secured with control unit mounting bolt. Refer to BR-41.

↓ NG → Repair.

↓ OK

Check control unit pin terminals for damage or the connection of control unit harness connector.
Reconnect control unit harness connector. Then retest.

Note: ABS may operate and cause vibration under any of the following conditions.

- **Applying brake gradually when shifting or operating clutch.**
- **Low friction (slippery) road.**
- **High speed cornering.**
- **Driving over bumps and pot holes.**
- **Engine speed is over 5,000 rpm with vehicle stopped.**

Diagnostic Procedure 10

SYMPTOM: Long stopping distance

Disconnect ABS relay box 6-pin connector and check whether stopping distance is still long.

- No → Go to **B** in Diagnostic Procedure 11, BR-83.
- Yes ↓

Perform Preliminary Check and air bleeding.

Note: Stopping distance may be larger than vehicles without ABS when road condition is slippery.

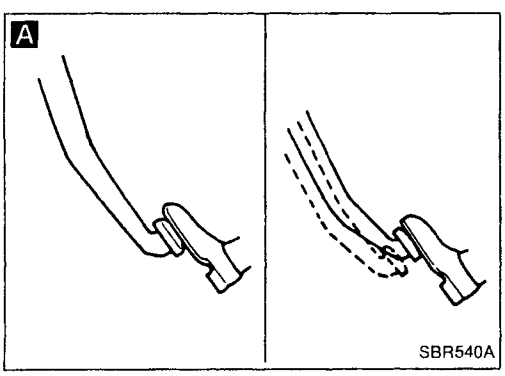

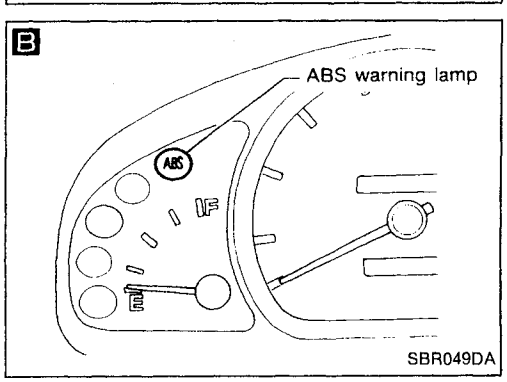

Diagnostic Procedure 11

SYMPTOM: Unexpected pedal action

A

Check brake pedal stroke. Is stroke excessively large?

- Yes → Perform Preliminary Check, refer to BR-65.
- No ↓

Disconnect ABS relay box 6-pin connector and check whether brake is effective.

- No → Perform Preliminary Check, refer to BR-65.
- Yes ↓

B

Ensure warning lamp remains off while driving.

- NG → Carry out self-diagnosis. Refer to BR-53 (Europe) or BR-56 (Except Europe).
- OK ↓

CHECK WHEEL SENSOR.

1. Check wheel sensor connector for terminal damage or loose connection.
2. Perform wheel sensor mechanical check.
   Refer to **B** in Diagnostic Procedure 4, BR-75.

- NG → Repair.
- OK ↓

Check control unit pin terminals for damage or the connection of control unit harness connector.
Reconnect control unit harness connector. Then retest.

BR

Diagnostic Procedure 12

SYMPTOM: ABS does not work.

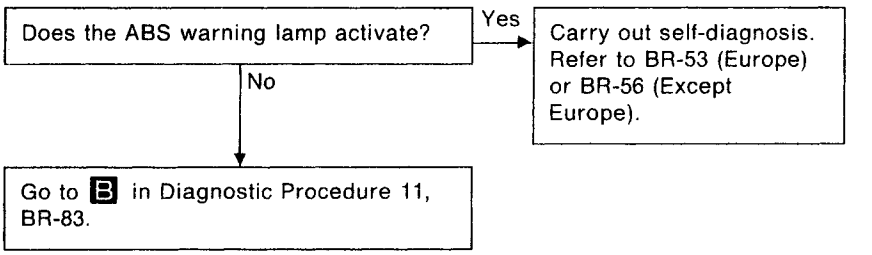

Note: ABS does not work when vehicle speed is under 10 km/h (6 MPH).

Diagnostic Procedure 13

SYMPTOM: ABS works frequently.

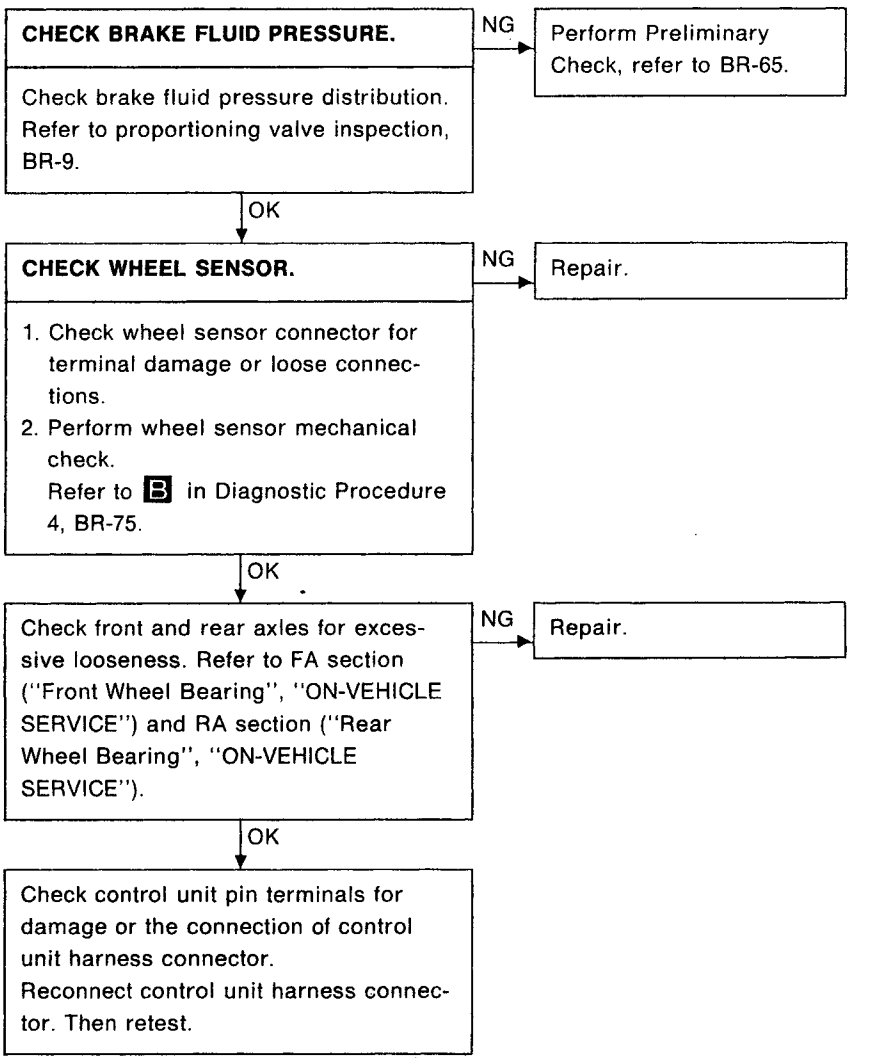

Electrical Components Inspection

WHEEL SENSOR

Check resistance for each sensor.

Resistance: 0.8 - 1.2 kΩ

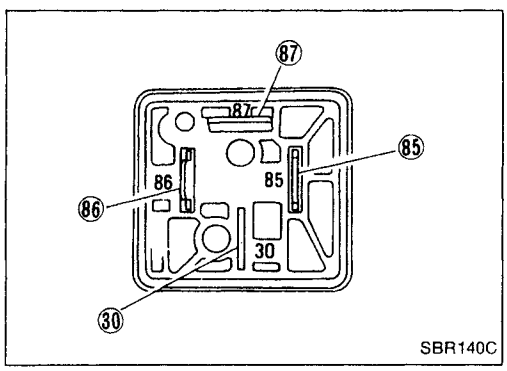

SBR140C

ACTUATOR MOTOR RELAY

Condition	Continuity existence between terminals 30 and 87
Battery voltage not applied between terminals 85 and 86.	No
Battery voltage applied between terminals 85 and 86.	Yes

While applying battery voltage to relay terminals, insert fuse into the circuit.

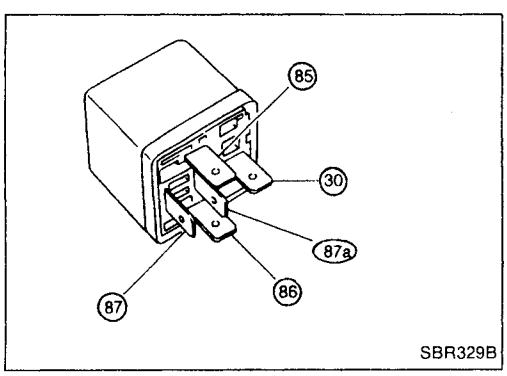

SBR329B

SOLENOID VALVE RELAY

Condition	Continuity existence between terminals 30 and 87a	Continuity existence between terminals 30 and 87
Battery voltage not applied between terminals 85 and 86.	Yes	No
Battery voltage applied between terminals 85 and 86.	No	Yes

While applying battery voltage to relay terminals, insert fuse into the circuit.

BR

General Specifications

BRAKE UNIT (Europe)

Applied model	Without ABS			With ABS		
	GA14DE	GA16DE	CD20	GA14DE	GA16DE	CD20
	Standard			Option		
Front brake						
Brake model	CL22VD	CL22VE		CL22VD	CL22VE	
Cylinder bore diameter mm (in)	54.0 (2.126)					
Pad mm (in) length x width x thickness	106 x 39.5 x 11.0 (4.17 x 1.555 x 0.433)					
Rotor outer diameter x thickness mm (in)	232 x 18 (9.13 x 0.71)		247 x 18 (9.72 x 0.71)	232 x 18 (9.13 x 0.71)		247 x 18 (9.72 x 0.71)
Rear brake						
Brake model	LT18C			CL7HB		
Cylinder bore diameter mm (in)	15.87 (5/8)			30.23 (1-1/4)		
Lining or pad mm (in) length x width x thickness	172.8 x 30 x 4 (6.80 x 1.18 x 0.16)			94 x 29 x 10 (3.70 x 1.14 x 0.39)		
Drum inner diameter or rotor outer diameter x thickness mm (in)	180 (7.09)			234 x 7 (9.21 x 0.28)		
Master cylinder						
Cylinder bore diameter mm (in)	20.64 (13/16)			22.22 (7/8)		
Control valve						
Valve model	Dual proportioning valve built into master cylinder			Dual proportioning valve separated from master cylinder		
Split point [kPa (bar, kg/cm^2, psi)] x reducing ratio	3,923 (39.2, 40, 569) x 0.4			3,923 (39.2, 40, 569) x 0.4		
Brake booster						
Booster model	M195T					
Diaphragm diameter mm (in)	Primary: 205 (8.07) Secondary: 180 (7.09)					
Recommended brake fluid	DOT 3 or DOT 4					

General Specifications (Cont'd)

BRAKE UNIT (Except for Europe)

Applied model	Except for Australia	Australia		Except for Australia	Australia	
	Without ABS			With ABS		
	GA15DE, GA16DE	GA16DE	SR20DE	GA15DE, GA16DE	GA16DE	SR20DE
	Standard	Standard		Option	Option	
Front brake Brake model	CL22VD	CL22VE	AD22VF	CL22VD	CL22VE	AD22VF
Cylinder bore diameter mm (in)	54.0 (2.126)					
Pad mm (in) length x width x thickness	106 x 39.5 x 11.0 (4.17 x 1.555 x 0.433)		106.8 x 43.8 x 10.0 (4.20 x 1.724 x 0.394)	106 x 39.5 x 11.0 (4.17 x 1.555 x 0.433)		106.8 x 43.8 x 10.0 (4.20 x 1.724 x 0.394)
Rotor outer diameter x thickness mm (in)	232 x 18 (9.13 x 0.71)	247 x 18 (9.72 x 0.71)	257 x 26 (10.12 x 1.02)	232 x 18 (9.13 x 0.71)	247 x 18 (9.72 x 0.71)	257 x 26 (10.12 x 1.02)
Rear brake Brake model	LT18C		CL9HC	CL7HB		CL9HC
Cylinder bore diameter mm (in)	15.87 (5/8)		33.96 (1-3/8)	30.23 (1-1/4)		33.96 (1-3/8)
Lining or pad mm (in) length x width x thickness	172.8 x 30 x 4 (6.80 x 1.18 x 0.16)		89.1 x 39.5 x 10.0 (3.508 x 1.555 x 0.394)	94 x 29 x 10 (3.70 x 1.14 x 0.39)		89.1 x 39.5 x 10.0 (3.508 x 1.555 x 0.394)
Drum inner diameter or rotor outer diameter x thickness mm (in)	180 (7.09)		258 x 9.0 (10.16 x 0.354)	234 x 7 (9.21 x 0.28)		258 x 9.0 (10.16 x 0.354)
Master cylinder Cylinder bore diameter mm (in)	20.64 (13/16)	22.22 (7/8)	23.81 (15/16)	22.22 (7/8)		23.81 (15/16)
Control valve Valve model	Dual proportioning valve built into master cylinder			Dual proportioning valve separated from master cylinder		
Split point [kPa (bar, kg/cm^2, psi)] x reducing ratio	3,923 (39.2, 40, 569) x 0.4	3,923 (39.2, 40, 569) x 0.4	1,961 (19.6, 20, 284) x 0.2	3,923 (39.2, 40, 569) x 0.4	2,942 (29.4, 30, 427) x 0.2	1,961 (19.6, 20, 284) x 0.2
Brake booster Booster model	S205 or C205	M195T				
Diaphragm diameter mm (in)	205 (8.07)	Primary: 205 (8.07) Secondary: 180 (7.09)				
Recommended brake fluid	DOT 3					

BR

Inspection and Adjustment

DISC BRAKE

Unit: mm (in)

Brake model	Front		Rear	
	CL22VD, CL22VE	AD22VF	CL7HB	CL9HC
Pad wear limit Minimum thickness	2.0 (0.079)		1.5 (0.059)	
Rotor repair limit Minimum thickness	16.0 (0.630)	24.0 (0.945)	6.0 (0.236)	8.0 (0.315)
Maximum runout	0.07 (0.0028)			
Maximum thickness variation	0.02 (0.0008)			

DRUM BRAKE

Unit: mm (in)

Brake model	Rear
	LT18C
Lining wear limit Minimum thickness	1.5 (0.059)
Drum repair limit Maximum inner diameter	181 (7.13)
Out-of-round	0.03 (0.0012) or less

BRAKE PEDAL

Unit: mm (in)

Applied model	RHD	LHD
Free height M/T	155.0 - 165.0 (6.10 - 6.50)	148.0 - 158.0 (5.83 - 6.22)
A/T	164.0 - 174.0 (6.46 - 6.85)	157.0 - 167.0 (6.18 - 6.57)
Depressed height [under force of 490 N (50 kg, 110 lb) with engine running]	See below.	
Clearance between switches and pedal stopper bracket	0.3 - 1.0 (0.012 - 0.039)	

Depressed Height [Under force of 490 N (50 kg, 110 lb) with engine running]

Unit: mm (in)

Applied model	RHD	LHD
M/T	75 (2.95) or more	
A/T	85 (3.35) or more	

PARKING BRAKE CONTROL

Brake type	Drum	Disc
Control type	Center lever	
Number of notches [under force of 196 N (20 kg, 44 lb)]	7 - 8	8 - 9
Number of notches when warning switch comes on	1 or less	