OPEL MERIVA

Owner's Manual

Contents

Introduction 2
In brief 6
Keys, doors and windows 20
Seats, restraints 35
Storage 61
Instruments and controls 81
Lighting 120
Climate control 129
Driving and operating 139
Vehicle care 171
Service and maintenance 220
Technical data 223
Customer information 238
Index 244

Introduction

Fuel	Designation			
Engine oil	Grade			
	Viscosity			
Tyre pressure		Tyre size	Front	Rear
	Summer tyres			
	Winter tyres			
Weights				
	Gross vehicle weight rating			
	- Kerb weight, basic model			
	= Loading			

Vehicle specific data

Please enter your vehicle's data on the previous page to keep it easily accessible. This information is available in the sections "Service and maintenance" and "Technical data" as well as on the identification plate.

Introduction

Your vehicle is a designed combination of advanced technology, safety, environmental friendliness and economy.

This Owner's Manual provides you with all the necessary information to enable you to drive your vehicle safely and efficiently.

Make sure your passengers are aware of the possible risk of accident and injury which may result from improper use of the vehicle.

You must always comply with the specific laws and regulations of the country that you are in. These laws may differ from the information in this Owner's Manual.

Disregarding the description given in this manual may affect your warranty.

When this Owner's Manual refers to a workshop visit, we recommend your Opel Service Partner. For gas vehicles we recommend an Opel Repairer authorised for servicing gas vehicles.

All Opel Service Partners provide first-class service at reasonable prices. Experienced mechanics trained by Opel work according to specific Opel instructions.

The customer literature pack should always be kept ready to hand in the vehicle.

Using this manual

- This manual describes all options and features available for this model. **Certain descriptions, including those for display and menu functions, may not apply to your vehicle due to model variant, country specifications, special equipment or accessories.**
- The "In brief" section will give you an initial overview.
- The table of contents at the beginning of this manual and within each section shows where the information is located.
- The index will enable you to search for specific information.
- This Owner's Manual depicts left-hand drive vehicles. Operation is similar for right-hand drive vehicles.
- The Owner's Manual uses the engine identifier code. The corresponding sales designation and engineering code can be found in the section "Technical data".
- Directional data, e.g. left or right, or front or back, always relate to the direction of travel.
- The vehicle display screens may not support your specific language.
- Display messages and interior labelling are written in **bold** letters.

Danger, Warnings and Cautions

⚠Danger

Text marked ⚠**Danger** provides information on risk of fatal injury. Disregarding this information may endanger life.

⚠Warning

Text marked ⚠**Warning** provides information on risk of accident or injury. Disregarding this information may lead to injury.

Caution

Text marked **Caution** provides information on possible damage to the vehicle. Disregarding this information may lead to vehicle damage.

Symbols

Page references are indicated with ⇨. ⇨ means "see page".

Page references and index entries refer to the indented headings given in the section table of content.

We wish you many hours of pleasurable driving.

Adam Opel AG

In brief

Initial drive information

Vehicle unlocking

Press 🔓 to unlock the doors and load compartment. Open the doors by pulling the handles. To open the tailgate, push the touchpad switch under the tailgate moulding.

Radio remote control ⇨ 21, Central locking system ⇨ 22, Load compartment ⇨ 27.

Seat adjustment

Longitudinal adjustment

Pull handle, slide seat, release handle. Try to move the seat back and forth to ensure that the seat is locked in place.

Seat position ⇨ 37, Seat adjustment ⇨ 38.

Backrest inclination

Pull lever, adjust inclination and release lever. Allow the seat to engage audibly.

Seat position ⇨ 37, Seat adjustment ⇨ 38.

Seat height

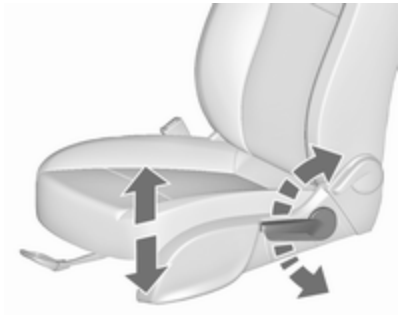

Lever pumping motion

up : seat higher
down : seat lower

Seat position ⇨ 37, Seat adjustment ⇨ 38.

Seat inclination

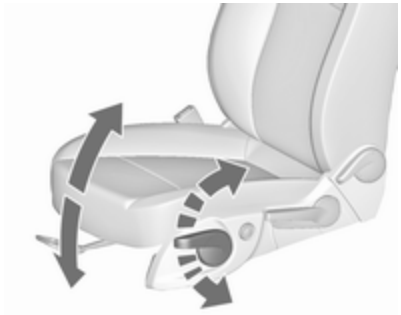

Lever pumping motion

up : front end higher
down : front end lower

Seat position ⇨ 37, Seat adjustment ⇨ 38.

Head restraint adjustment

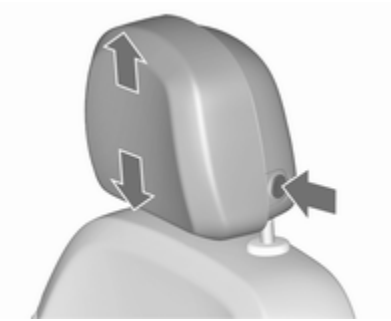

Press release button, adjust height and engage.

To adjust horizontally, pull the head restraint forwards. It engages in several positions. To return to its rearmost position, pull fully forwards and release.

Head restraints ⇨ 35.

Seat belt

Pull out the seat belt and engage in belt buckle. The seat belt must not be twisted and must fit close against the body. The backrest must not be tilted back too far (maximum approx. 25°).

To release belt, press red button on belt buckle.

Seat position ⇨ 37, Seat belts ⇨ 45, Airbag system ⇨ 49.

Mirror adjustment

Interior mirror

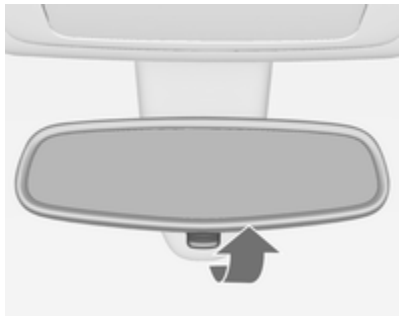

To reduce dazzle, adjust the lever on the underside of the mirror housing.

Interior mirror ⇨ 30, Automatic anti-dazzle interior mirror ⇨ 31.

Exterior mirrors

Select the relevant exterior mirror and adjust it.

Convex exterior mirrors ⇨ 29, Electric adjustment ⇨ 29, Folding exterior mirrors ⇨ 30, Heated exterior mirrors ⇨ 30.

Steering wheel adjustment

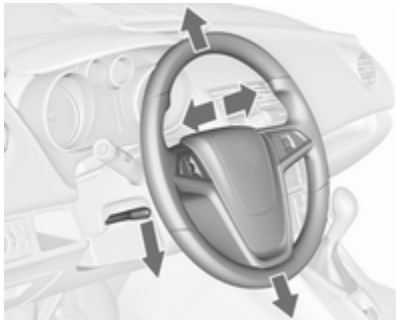

Unlock the lever, adjust the steering wheel, then engage the lever and ensure it is fully locked.

Do not adjust the steering wheel unless the vehicle is stationary and the steering wheel lock has been released.

Airbag system ⇨ 49, Ignition positions ⇨ 140.

Instrument panel overview

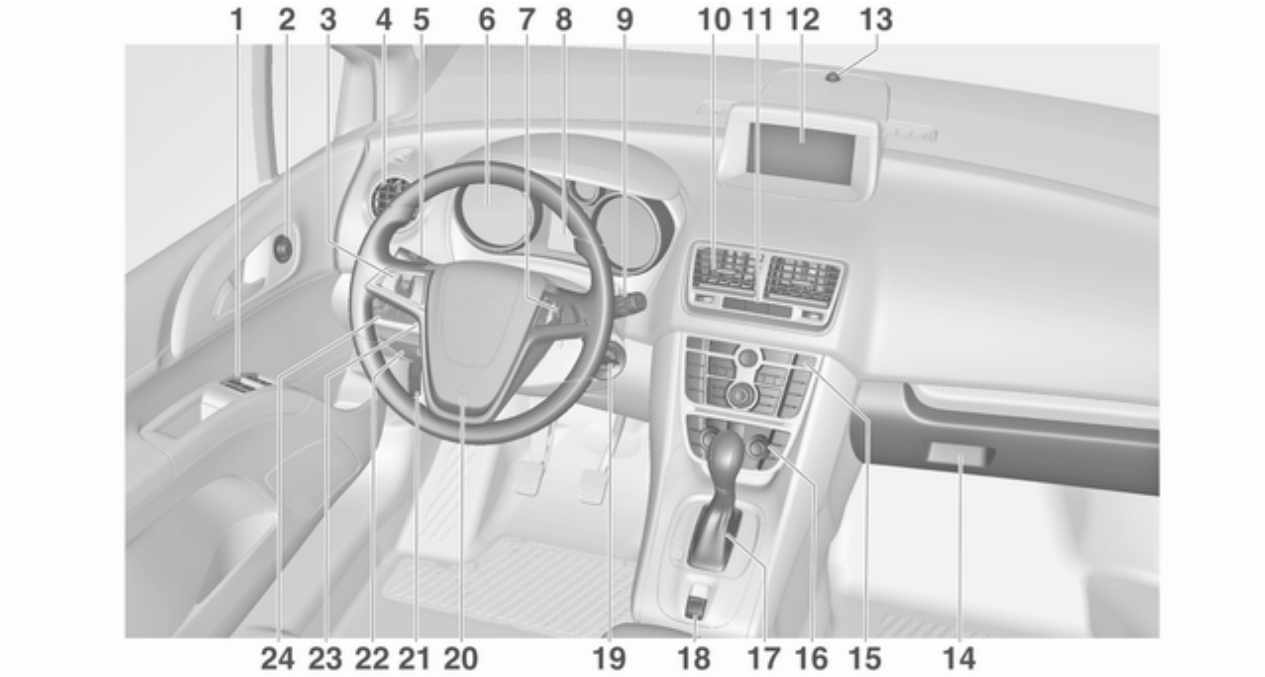

1 Power windows 31
2 Exterior mirrors 29
3 Cruise control 154
4 Side air vents 136
5 Turn and lane-change signals, headlight flash, low beam and high beam ... 124
Exit lighting 127
Parking lights 125
Driver Information Centre 101
6 Instruments 89
7 Steering wheel controls 82
8 Driver Information Centre 101
9 Windscreen wiper, windscreen washer system, rear wiper, rear washer system 83
10 Centre air vents 136
11 Central locking system 22
Hazard warning flashers 124
Control indicator for airbag deactivation 95
12 Info-Display 104
13 Sensor for electronic climate control system 132
14 Glovebox 61
15 Traction Control system 153
Electronic Stability Control . 153
Ultrasonic parking assist 156
Eco button 142
Fuel selector 90
16 Climate control system 129
17 Selector lever, manual transmission 149
Automatic transmission 146
18 Electric parking brake 151
19 Ignition switch with steering wheel lock 140
20 Horn 83
Driver airbag 52
21 Bonnet release lever 173
22 Storage compartment 61
Fuse box 193
23 Steering wheel adjustment . . 82
24 Light switch 120
Headlight range adjustment 122
Front fog lights 124
Rear fog light 125
Instrument illumination 126

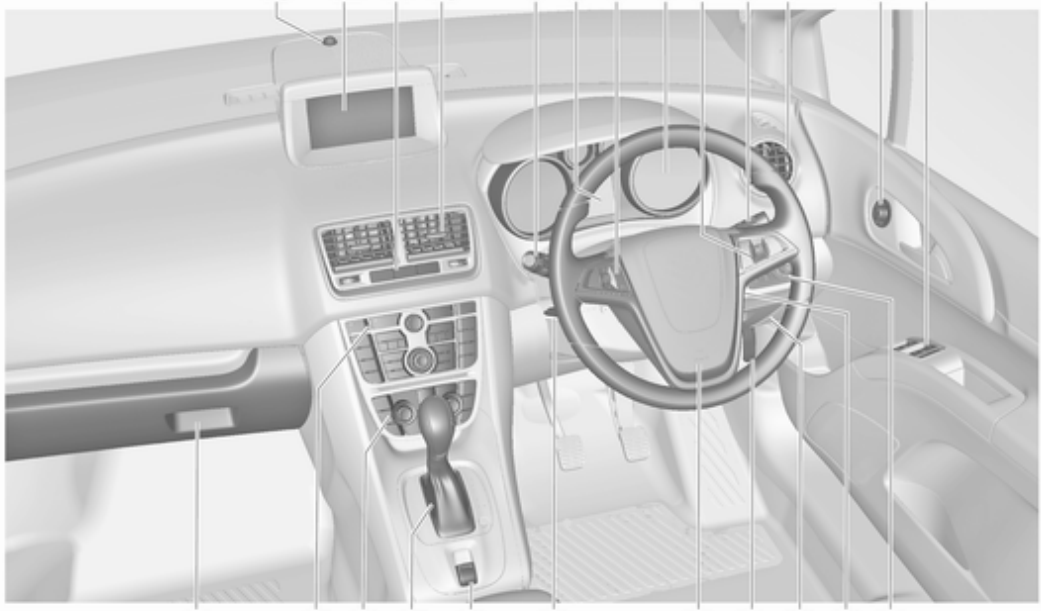
13
12
11
10
5
8
3
6
7
9
4
2
1
14
15
16
17
18
23
20
21
22
19
24

Exterior lighting

Turn light switch:

0 : lights off
⇒ : sidelights
≡D : low beam

Automatic light control

AUTO : automatic light control: exterior lighting is switched on and off automatically
⏻ : activation or deactivation of the automatic light control
⇒ : sidelights
≡D : low beam

Fog lights

Press light switch

≠D : front fog lights
D≠ : rear fog light

Lighting ⇨ 120.

Headlight flash, high beam and low beam

headlight flash : pull lever
high beam : push lever
low beam : push or pull lever

Automatic light control ⇨ 121, High beam ⇨ 122, Headlight flash ⇨ 122.

Turn and lane-change signals

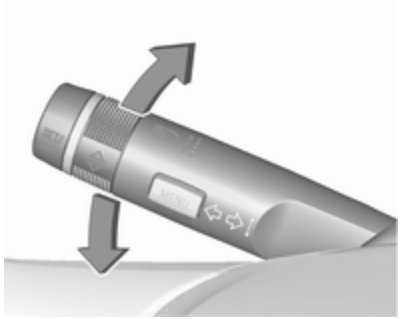

lever up : right turn signal
lever down : left turn signal

Turn and lane-change signals ⇨ 124, Parking lights ⇨ 125.

Hazard warning flashers

Operated by pressing ⚠.

Hazard warning flashers ⇨ 124.

Horn

Press 📯.

Washer and wiper systems

Windscreen wiper

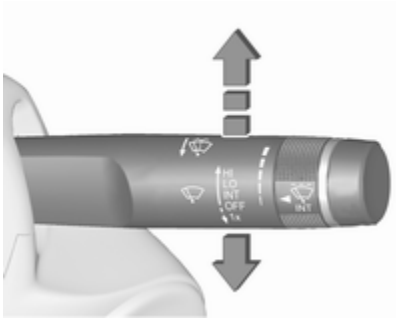

HI : fast
LO : slow
INT : interval wiping or automatic wiping with rain sensor
OFF : off

For a single wipe when the windscreen wiper is off, press the lever down to position **1x**.

Windscreen wiper ⇨ 83, Wiper blade replacement ⇨ 179.

Windscreen washer

Pull lever.

Windscreen washer system ⇨ 83, Washer fluid ⇨ 176.

Rear window wiper

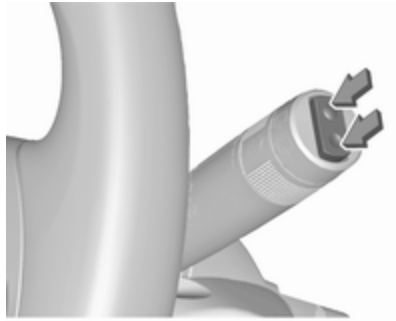

Press the rocker switch to activate the rear window wiper:

upper switch : continuous operation
lower switch : intermittent operation
middle position : off

Rear window washer

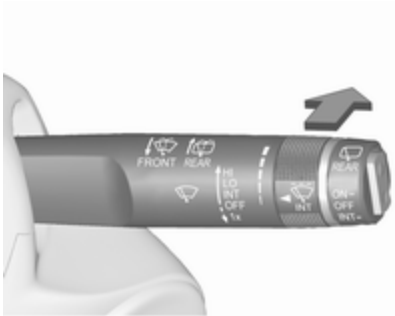

Push lever.

Washer fluid is sprayed on the rear window and the wiper wipes a few times.

Rear window wiper/washer ⇨ 85.

Climate control

Heated rear window, heated exterior mirrors

The heating is operated by pressing ⊞.

Heated rear window ⇨ 33.

Demisting and defrosting the windows

Press ⊞.

Set the temperature control to the highest level.

Heated rear window ⊞ on.

Climate control system ⇨ 129.

Transmission

Manual transmission

Reverse: with the vehicle stationary, depress clutch pedal, press the release button on the selector lever and engage the gear.

If the gear does not engage, set the lever to neutral, release the clutch pedal and depress again; then repeat gear selection.

Manual transmission ⇨ 149.

Automatic transmission

P : park
R : reverse
N : neutral
D : drive

Manual mode: move selector lever from **D** to the left.

+ : higher gear
− : lower gear

The selector lever can only be moved out of **P** when the ignition is on and the brake pedal is applied. To engage **P** or **R**, press the release button.

Automatic transmission ⇨ 146.

Starting off

Check before starting off

- Tyre pressure and condition ⇨ 197, ⇨ 235.
- Engine oil level and fluid levels ⇨ 174.
- All windows, mirrors, exterior lighting and number plates are free from dirt, snow and ice and are operational.
- Proper position of mirrors, seats, and seat belts ⇨ 29, ⇨ 37, ⇨ 46.
- Brake function at low speed, particularly if the brakes are wet.

Starting the engine

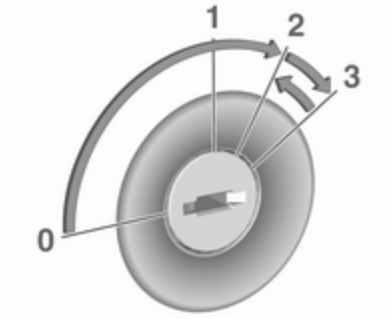

- Turn key to position **1**.
- Move the steering wheel slightly to release the steering wheel lock.
- Operate clutch and brake.
- Automatic transmission in **P** or **N**.
- Do not operate accelerator pedal.
- Diesel engines: turn the key to position **2** for preheating and wait until control indicator extinguishes.
- Turn key to position **3** and release.

Starting the engine ⇨ 141.

Stop-start system

If the vehicle is at a low speed or at a standstill and certain conditions are fulfilled, activate an Autostop as follows:

- Depress the clutch pedal.
- Set the lever in neutral.
- Release the clutch pedal.

An Autostop is indicated by the needle at the **AUTOSTOP** position in the tachometer.

To restart the engine, depress the clutch pedal again.

Stop-start system ⇨ 142.

Parking

⚠Warning

- Do not park the vehicle on an easily ignitable surface. The high temperature of the exhaust system could ignite the surface.
- Always apply parking brake.

  Pull switch Ⓟ for approx. one second.

  The electric parking brake is applied when control indicator Ⓟ illuminates ⇨ 96.
- Switch off the engine.
- If the vehicle is on a level surface or uphill slope, engage first gear or set the selector lever to position **P** before removing the ignition key. On an uphill slope, turn the front wheels away from the kerb.

  If the vehicle is on a downhill slope, engage reverse gear or set the selector lever to position **P** before removing the ignition

key. Turn the front wheels towards the kerb.

- Close the windows.
- Remove the ignition key from the ignition switch. Turn the steering wheel until the steering wheel lock is felt to engage.

  For vehicles with automatic transmission, the key can only be removed when the selector lever is in position **P**.

- Lock the vehicle by pressing 🔒 on the radio remote control.
- Activate the anti-theft alarm system ⇨ 28.
- The engine cooling fans may run after the engine has been switched off ⇨ 173.

Caution

After running at high engine speeds or with high engine loads, operate the engine briefly at a low load or run in neutral for approx. 30 seconds before switching off, in order to protect the turbocharger.

Keys, locks ⇨ 20, Laying the vehicle up for a long period of time ⇨ 172.

Keys, doors and windows

Keys, locks **20**
Keys 20
Car Pass 21
Radio remote control 21
Memorised settings 22
Central locking system 22
Automatic locking 25
Child locks 26
Doors **26**
Rear doors 26
Load compartment 27
Vehicle security **28**
Anti-theft locking system 28
Anti-theft alarm system 28
Immobiliser 29
Exterior mirrors **29**
Convex shape 29
Electric adjustment 29
Folding mirrors 30
Heated mirrors 30
Interior mirrors **30**
Manual anti-dazzle 30
Automatic anti-dazzle 31
Windows **31**
Windscreen 31
Manual windows 31
Power windows 31
Heated rear window 33
Sun visors 33
Roof **34**
Moonroof 34

Keys, locks

Keys

Caution
Do not attach heavy or bulky items to the ignition key.

Replacement keys

The key number is specified in the Car Pass or on a detachable tag.

The key number must be quoted when ordering replacement keys as it is a component of the immobiliser system.

Locks ⇨ 216.

The code number of the adapter for the locking wheel bolts is specified on a card. It must be quoted when ordering a replacement adapter.

Wheel changing ⇨ 207.

Key with foldaway key section

Press button to extend. To fold the key, first press the button.

Car Pass

The Car Pass contains security related vehicle data and should therefore be kept in a safe place.

When the vehicle is taken to a workshop, this data is required in order to perform certain operations.

Radio remote control

Used to operate:

- central locking system
- anti-theft locking system
- anti-theft alarm system
- power windows

The radio remote control has a range of approx. five metres. It can be restricted by external influences. The hazard warning flashers confirm operation.

Handle with care, protect from moisture and high temperatures and avoid unnecessary operation.

Fault

If the central locking system cannot be operated with the radio remote control, the cause may be one of the following:

- Fault in radio remote control.
- The range is exceeded.
- The battery voltage is too low.
- Frequent, repeated operation of the radio remote control while not in range, which will require re-synchronisation.
- Overload of the central locking system by operating at frequent intervals, the power supply is interrupted for a short time.
- Interference from higher-power radio waves from other sources.

Unlocking ⇨ 22.

Basic settings

Some settings can be changed in the menu **Settings** in the Info-Display. Vehicle personalisation ⇨ 112.

Radio remote control battery replacement

Replace the battery as soon as the range is reduced.

Batteries do not belong in household waste. They must be disposed of at an appropriate recycling collection point.

Key with foldaway key section

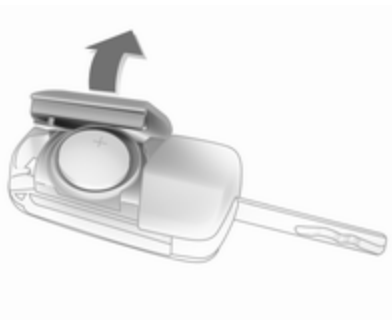

Extend the key and open the unit. Replace the battery (battery type CR 2032), paying attention to the installation position. Close the unit and synchronise.

Key with fixed key section

Have the battery replaced by a workshop.

Radio remote control synchronisation

After replacing the battery, unlock the door with the key in the driver's door lock. The radio remote control will be synchronised when the ignition is switched on.

Memorised settings

Whenever the key is removed from the ignition switch, the following settings are automatically memorised by the key:

- lighting
- Infotainment system (only CD 400)
- central locking system
- comfort settings

The saved settings are automatically used the next time the memorised key is inserted into the ignition switch and turned to position **1** ⇨ 140.

A precondition is that **Personalization by driver** is activated in the personal settings of the Graphic-Info-Display. This must be set for each key used. On vehicles equipped with Colour-Info-Display, the personalisation is permanently activated.

Vehicle personalisation ⇨ 112.

Central locking system

Unlocks and locks doors, load compartment and fuel filler flap.

A pull on an interior door handle unlocks the respective door. Pulling the handle once more opens the door.

Note
In the event of an accident in which airbags or belt pretensioners are deployed, the vehicle is automatically unlocked.

Unlocking

Press 🔓.

Two settings are selectable:

- All doors, load compartment and fuel filler flap are unlocked by pressing 🔓 once.
- Only the driver's door, load compartment and fuel filler flap are unlocked by pressing 🔓 once. To unlock all doors, press 🔓 twice.

The setting can be changed in the menu **Settings** in the Info-Display. Vehicle personalisation ⇨ 112.

The setting can be saved for the key being used.

Memorised settings ⇨ 22.

Locking

Close doors, load compartment and fuel filler flap.

Press 🔒.

If the driver's door is not closed properly, the central locking system will not work.

Unlocking and opening the tailgate

Press 🔓 when the ignition is off to unlock all doors. The tailgate is released and is unlocked and opened by pushing the touchpad switch under the tailgate moulding.

Central locking button

Locks or unlocks all doors, the load compartment and fuel filler flap from the passenger compartment.

Press central locking button: the doors are locked or unlocked. If the doors are locked, the LED in the button illuminates.

After locking with the radio remote control, the LED in the button illuminates for approx. 2 minutes.

Fault in radio remote control system

Unlocking

Manually unlock the driver's door by turning the key in the lock. Switch on the ignition and press the central locking button to unlock all doors, load compartment and fuel filler flap.

By switching on the ignition, the anti-theft locking system is deactivated ⇨ 28.

Locking

Close the driver's door, open the passenger door, then press central locking button. The vehicle is locked. Close the passenger door.

Fault in central locking system

Unlocking

Manually unlock the driver's door by turning the key in the lock. The other doors can be opened by pulling the interior handle twice. The load compartment and fuel filler flap cannot be opened.

To deactivate the anti-theft locking system, switch on the ignition ⇨ 28.

Locking

Insert key into the opening above the lock on inside of the door and operate the lock by pressing until it clicks. Then close the door. The procedure must be carried out for each door. The driver's door can also be locked from the outside with the key. The fuel filler flap and the tailgate cannot be locked.

Automatic locking

Automatic locking after driving off

The vehicle is locked automatically when exceeding a speed of 4 km/h. Opening from outside is not possible.

Additionally, opening of the rear doors from inside is not possible when the vehicle speed is above 4 km/h.

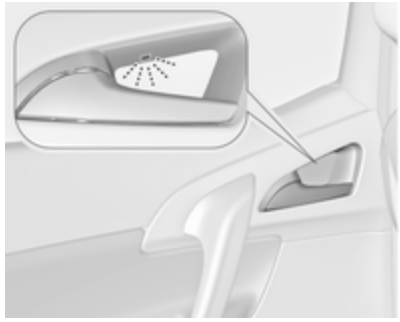

Green LEDs indicate that opening from inside is possible:

Hold the inner rear door handle to activate the proximity sensor and then pull the handle.

When the vehicle speed is below 4 km/h, opening of the doors from outside is possible after:

- opening any door from inside
- pressing the central locking button

Caution

Automatic locking is only active with ignition on.

Fault in the automatic locking system

In case of a system fault, control indicator ⚠! illuminates in the instrument cluster and a warning chime sounds to indicate that the rear doors are not secured against opening. Inform passengers to keep clear of the door handles.

Stop immediately and activate the child lock in both rear doors. If the child lock is already activated, first deactivate and then activate again. The green LEDs will extinguish and the warning chime will stop as soon as both child locks are activated. Pull the inner rear door handles to check if the doors are locked from inside. Consult a workshop.

Automatic relock after unlocking

A short time after unlocking with the remote control, all doors, load compartment and fuel filler flap are locked automatically, provided that no door has been opened.

Child locks

⚠ Warning

Use the child locks whenever children are occupying the rear seats.

Using a key or suitable screwdriver, turn the child lock in the rear door to the horizontal position. The green LED will extinguish. The door cannot be opened from the inside. For deactivation, turn the child lock to the vertical position.

Doors

Rear doors

⚠ Warning

Take care of other persons when getting in or out at the front and rear simultaneously.

Only use the grab handle provided.

The rear doors have an automatic locking feature ⇨ 25.

Load compartment

Tailgate

Opening

After unlocking, push the touchpad switch under the tailgate moulding and open the tailgate.

Central locking system ⇨ 22.

Closing

Use one of the interior handles.

Do not push the touchpad switch under the moulding whilst closing as this will unlock the tailgate again.

Central locking system ⇨ 22.

General hints for operating tailgate

⚠ Danger

Do not drive with the tailgate open or ajar, e.g. when transporting bulky objects, since toxic exhaust gases, which cannot be seen or smelled, could enter the vehicle. This can cause unconsciousness and even death.

Caution

Before opening the tailgate check overhead obstructions, such as a garage door, to avoid damage to the tailgate. Always check the moving area above and behind the tailgate.

Note

The installation of certain heavy accessories onto the tailgate may affect its ability to remain open.

Vehicle security

Anti-theft locking system

⚠Warning

Do not use the system if there are people in the vehicle! The doors cannot be unlocked from the inside.

The system deadlocks all the doors. All doors must be closed otherwise the system cannot be activated.

If the ignition was on, the driver's door must be opened and closed once so that the vehicle can be secured.

Unlocking the vehicle disables the mechanical anti-theft locking system. This is not possible with the central locking button.

Activating

Press 🔒 on the radio remote control twice within 10 seconds.

Anti-theft alarm system

The anti-theft alarm system incorporates and is operated in conjunction with the anti-theft locking system.

It monitors:

- doors, tailgate, bonnet
- ignition

Unlocking the vehicle deactivates both systems simultaneously.

Status LED

Status LED is integrated in the central locking button.

Status during the first 10 seconds of anti-theft alarm system activation:

LED illuminates	:	test, arming delay
LED flashes quickly	:	doors, tailgate or bonnet not completely closed, or system fault

Status after system is armed:

LED flashes slowly	:	system is armed

Seek the assistance of a workshop in the event of faults.

Alarm

When triggered, the alarm horn sounds and the hazard warning lights flash simultaneously. The number and duration of alarm signals are stipulated by legislation.

The alarm can be silenced by pressing any button of the radio remote control or by switching on the ignition.

The anti-theft alarm system can be deactivated only by pressing 🔓 or by switching on the ignition.

A triggered alarm, which has not been interrupted by the driver, will be indicated by a warning message or a warning code in the Driver Information Centre after switching on the ignition.

Vehicle messages ⇨ 106.

Immobiliser

The system is part of the ignition switch and checks whether the vehicle is allowed to be started with the key being used.

The immobiliser is activated automatically after the key has been removed from the ignition switch.

If control indicator 🔒 flashes when the ignition is on, there is a fault in the system; the engine cannot be started. Switch off the ignition and then repeat the start attempt.

If control indicator 🔒 continues flashing, attempt to start the engine using the spare key and seek the assistance of a workshop.

Note
The immobiliser does not lock the doors. You should always lock the vehicle after leaving it and switch on the anti-theft alarm system ⇨ 22, ⇨ 28.

Control indicator 🔒 ⇨ 99.

Exterior mirrors

Convex shape

The convex exterior mirror contains an aspherical area and reduces blind spots. The shape of the mirror makes objects appear smaller, which will affect the ability to estimate distances.

Electric adjustment

Select the relevant exterior mirror by turning the control to left **(L)** or right **(R)**. Then swivel the control to adjust the mirror.

In position **0** no mirror is selected.

Folding mirrors

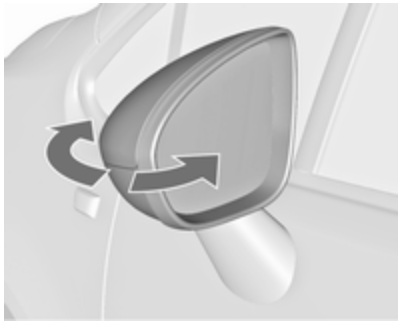

For pedestrian safety, the exterior mirrors will swing out of their normal mounting position if they are struck with sufficient force. Reposition the mirror by applying slight pressure to the mirror housing.

Heated mirrors

Operated by pressing ⊞.

Heating works with the engine running and is switched off automatically after a short time.

Interior mirrors

Manual anti-dazzle

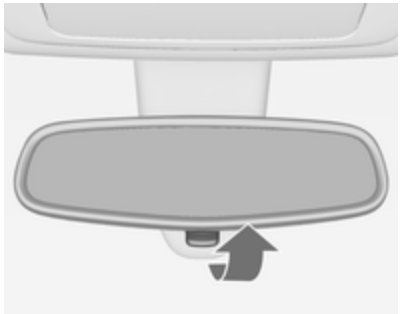

To reduce dazzle, adjust the lever on the underside of the mirror housing.

Automatic anti-dazzle

Dazzle from following vehicles at night is automatically reduced.

Windows

Windscreen

Heat-reflecting windscreen

The heat-reflecting windscreen has a coating which reflects solar radiation. Also data signals, e.g. from toll stations, might be reflected.

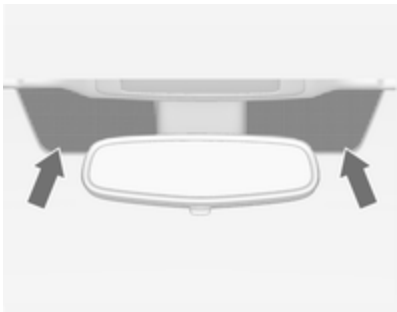

The marked areas on the windscreen are not covered with the coating. Devices for electronic data recording and fee payment must be attached in these areas. Otherwise data recording malfunctions may occur.

Windscreen stickers

Do not attach stickers such as toll road stickers or similar on the windscreen in the area of the interior mirror. Otherwise the detection zone of the sensor and the view area of the camera in the mirror housing could be restricted.

Manual windows

The door windows can be opened or closed with the window cranks.

Power windows

⚠ Warning

Take care when operating the power windows. Risk of injury, particularly to children.

If there are children on the rear seats, switch on the child safety system for the power windows.

Keep a close watch on the windows when closing them. Ensure that nothing becomes trapped in them as they move.

Power windows can be operated:

- with ignition on
- within ten minutes of switching ignition off
- within five minutes of opening or closing a door

After switching off the ignition, window operation is disabled as soon as the vehicle is locked with the radio remote control.

Operate the switch for the respective window by pushing to open or pulling to close.

Pushing or pulling gently to the first detent: window moves up or down as long as switch is operated.

Pushing or pulling firmly to the second detent and then releasing: window moves up or down automatically with safety function enabled. To stop movement, operate the switch once more in the same direction.

Safety function

If the window glass encounters resistance above the middle of the window during automatic closing, it is immediately stopped and opened again.

Override safety function

In the event of closing difficulties due to frost or the like, switch on the ignition, then pull the switch to the first detent and hold. The window moves up without safety function enabled. To stop movement, release the switch.

Child safety system for rear windows

Press ⊠ to deactivate rear door power windows, the LED illuminates. To activate, press ⊠ again.

Operating windows from outside

The windows can be operated remotely from outside the vehicle.

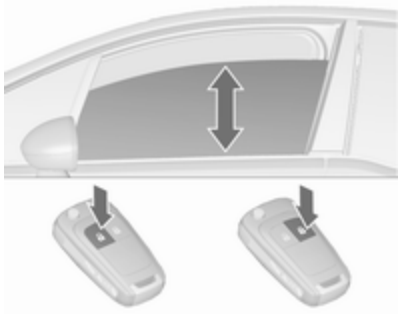

Press and hold to open windows.

Press and hold to close windows.

Release button to stop window movement.

Overload

If the windows are repeatedly operated within short intervals, the window operation is disabled for some time.

Initialising the power windows

If the windows cannot be closed automatically (e.g. after disconnecting the vehicle battery), a warning message or a warning code is displayed in the Driver Information Centre.

Vehicle messages ⇨ 106.

Activate the window electronics as follows:

1. Close doors.
2. Switch on ignition.
3. Pull switch until the window is closed and keep pulling for additional two seconds.
4. Repeat for each window.

Heated rear window

Operated by pressing .

Heating works with the engine running and is switched off automatically after a short time.

Depending on the engine type, the heated rear window comes on automatically when the diesel particle filter is being cleaned.

Sun visors

The sun visors can be folded down or swivelled to the side to prevent dazzling.

If the sun visors have integral mirrors, the mirror covers should be closed when driving.

A ticket holder is located on the back of the sun visor.

Roof

Moonroof

Do not affix any stickers to the roof. Do not cover the vehicle using a tarpaulin.

Sunblind

The sunblind is electrically operated.

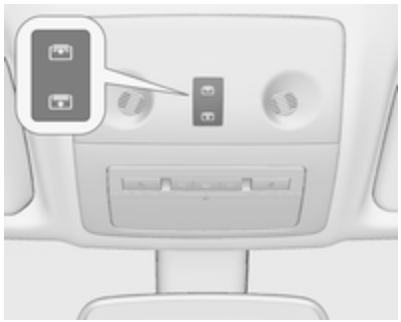

Press ⊼ or ⊽ gently to the first detent: the sunblind is opened or closed as long as the switch is operated.

Press ⊼ or ⊽ firmly to the second detent and then release: the sunblind is opened or closed automatically. To stop movement, operate the switch once more.

Safety function

If the sunblind encounters resistance during automatic closing, it is immediately stopped and opened again.

Function standby

In ignition switch position **1** the sunblind is operable ⇨ 140.

Initialising after a power failure

After a power failure, it may only be possible to operate the sunblind to a limited extent. Have the system initialised by your workshop.

Seats, restraints

Head restraints **35**
Active head restraints 36
Front seats **37**
Seat position 37
Seat adjustment 38
Armrest 40
Heating 41
Rear seats **42**
Armrest 43
Seat belts **45**
Three-point seat belt 46
Airbag system **49**
Front airbag system 52
Side airbag system 52
Curtain airbag system 53
Airbag deactivation 53
Child restraints **55**
Child restraint systems 55
Child restraint installation locations 57
ISOFIX child restraint systems . . 60
Top-tether fastening eyes 60

Head restraints

Position

⚠ Warning

Only drive with the head restraint set to the proper position.

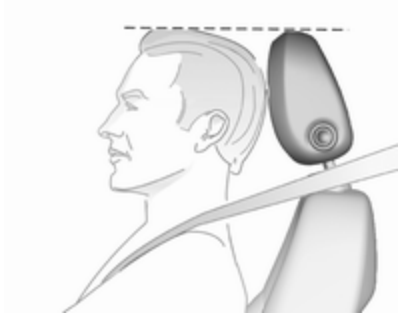

The upper edge of the head restraint should be at upper head level. If this is not possible for extremely tall people, set to highest position, and set to lowest position for small people.

Adjustment

Head restraints on front seats

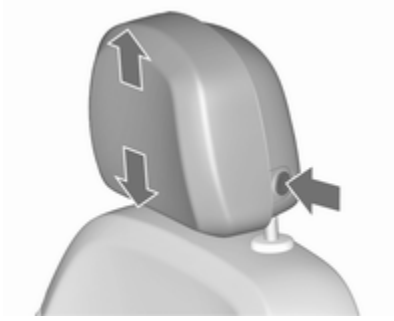

Height adjustment
Press release button, adjust height and engage.

Horizontal adjustment

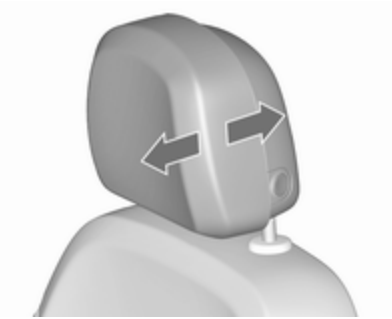

To adjust horizontally, pull the head restraint forwards. It engages in several positions.

To return to its rearmost position, pull fully forwards and release.

Head restraints on rear seats

Height adjustment

Pull the head restraint upwards or press catch to release and push the head restraint downwards.

Active head restraints

In the event of a rear-end impact, the front parts of the active head restraints are moved slightly forwards. Thus the head is supported so that the risk of whiplash injury is reduced.

Note

Approved accessories may only be attached if the seat is not in use.

Front seats

Seat position

⚠ Warning

Only drive with the seat correctly adjusted.

⚠ Danger

Do not sit nearer than 25 cm from the steering wheel, to permit safe airbag deployment.

⚠ Warning

Never adjust seats while driving as they could move uncontrollably.

- Sit with buttocks as far back against the backrest as possible. Adjust the distance between the seat and the pedals so that legs are slightly angled when fully pressing the pedals. Slide the front passenger seat as far back as possible.
- Set seat height high enough to have a clear field of vision on all sides and of all display instruments. There should be at least one hand of clearance between head and the roof frame. Your thighs should rest lightly on the seat without pressing into it.
- Sit with shoulders as far back against the backrest as possible. Set the backrest rake so that it is possible to easily reach the steering wheel with arms slightly bent. Maintain contact between shoulders and the backrest when turning the steering wheel. Do not angle the backrest too far back. We recommend a maximum rake of approx. 25°.
- Adjust seat and steering wheel in a way that the wrist rests on top of the steering wheel while the arm is fully extended and shoulders on the backrest.
- Adjust the steering wheel ⇨ 82.
- Adjust the head restraint ⇨ 35.
- Adjust the height of the seat belt ⇨ 46.
- Adjust the thigh support so that there is a space approx. two fingers wide between the edge of the seat and the hollow of the knee.
- Adjust the lumbar support so that it supports the natural shape of the spine.

Seat adjustment

Drive only with engaged seats and backrests.

Longitudinal adjustment

Pull handle, slide seat, release handle. Try to move the seat back and forth to ensure that the seat is locked in place.

Backrest inclination

Pull lever, adjust inclination and release lever. Allow the backrest to engage audibly.

Seat height

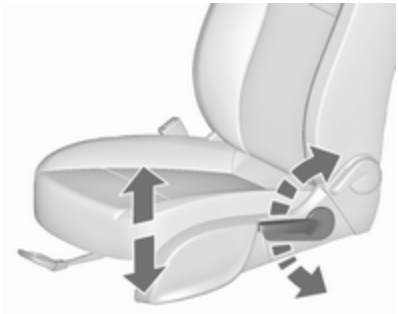

Lever pumping motion

up : seat higher
down : seat lower

Seat inclination

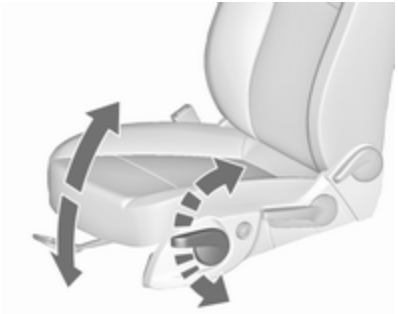

Lever pumping motion

up : front end higher
down : front end lower

Lumbar support

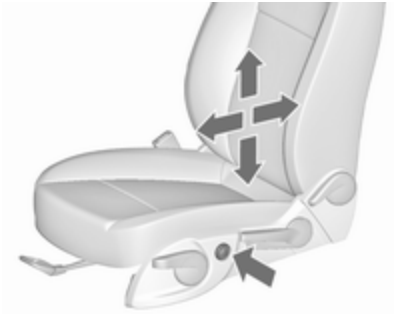

Adjust lumbar support using the four-way switch to suit personal requirements.

Moving support up and down: push switch up or down.

Increasing and decreasing support: push switch forwards or backwards.

Adjustable thigh support

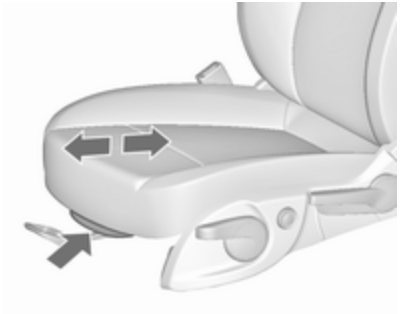

Pull the lever and slide the thigh support.

Armrest

Detachable armrest

The armrest contains a storage compartment.

Storage compartment ⇨ 63.

Installing armrest on the centre console

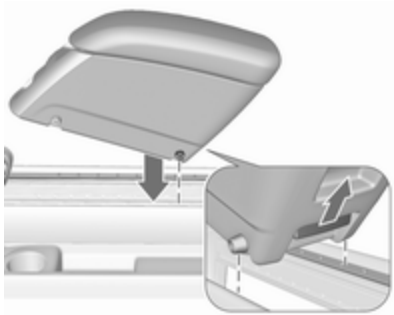

Press the rear button and insert the rear guide pins into the upper guide rails. Release the button.

Lower the armrest at the front. Pull the front handle firmly and insert the front guide pins into the upper guide rails. Release the handle. Move the armrest until it engages audibly.

Note
Install the armrest in the direction shown in the illustration. Otherwise the armrest may not engage properly.

Moving armrest

Pull the front handle slightly and move the armrest to the desired position. Release the handle. Move the armrest until it engages audibly.

If a cupholder is installed in the lower guide rail, make sure that the frame of the cupholder is in the initial position.

Note
If too much weight is put on the armrest, it might unlatch. Ease of movement might be restricted. Lift the armrest slightly to latch again.

Armrest storage ⇨ 63.

Cupholders ⇨ 61.

Removing armrest

Pull the front handle firmly and raise the armrest at the front. Press the rear button and remove the armrest.

The armrest can also be installed on the folded centre rear seat ⇨ 43.

Heating

Adjust heating to the desired setting by pressing for the respective seat one or more times. The control indicator in the button indicates the setting.

Prolonged use of the highest setting for people with sensitive skin is not recommended.

Seat heating is operational when engine is running and during an Autostop.

Stop-start system ⇨ 142.

Rear seats

Seat adjustment

⚠ Warning

Only drive with the outer seats engaged in the guide rails.

⚠ Warning

Never adjust seats while driving as they could move uncontrollably.

The rear outboard seats can be individually moved forwards or backwards. The seats are movable in longitudinal and transversal directions.

In longitudinal direction, the seats can be engaged in intermediate positions.

Pull handle, slide seat, release handle and allow seat to engage.

Flexible Seat System (FlexSpace)

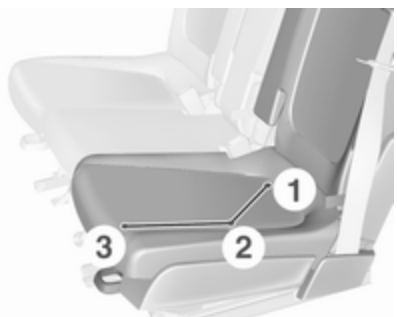

The rear seat row can be adjusted with two seats, providing maximum seating space in position **1**, or with three seats in position **2**. In position **1** the centre seat is lowered.

The outboard seats can be moved forward into position **3**.

Moving seats to position 1

Pull the strap and fold down the centre seat.

Pull handle and slide the seat transversely backward into position **1**. The seat is automatically guided inward. Release handle and allow seat to engage in position.

Moving seats to position 2

Pull handle and slide the seat transversely forwards into position **2**. The seat is automatically guided outwards. Release handle and allow seat to engage in position.

⚠Warning
Detach the armrest before raising the rear centre backrest. Armrest ⇨ 40.

Pull the strap and raise the centre seat.

The centre seat is not usable if the outer seats are moved forwards to position **3**.

Armrest

An armrest adapter can be installed on the seatback of the centre seat. A detachable armrest can be attached to the adapter.

Installing the adapter

Pull the strap and fold down the centre seat ⇨ 42.

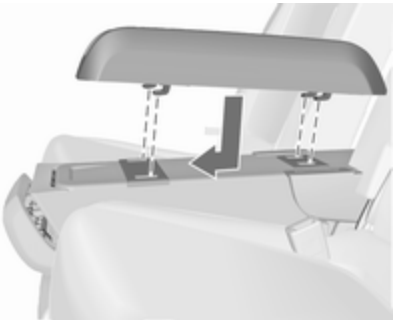

Insert the hooks of the adapter into the recesses of the seatback and push the adapter forwards.

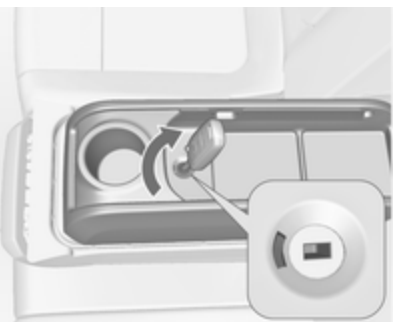

Lock the adapter by turning the ignition key clockwise in the lock. The adapter is locked properly when the green mark is visible.

Mount the armrest on the adapter.

Armrest ⇨ 40.

Attaching the armrest to the adapter

Press the front button and insert the front guide pins into the guide rails. Move the armrest until it engages audibly. Release the button.

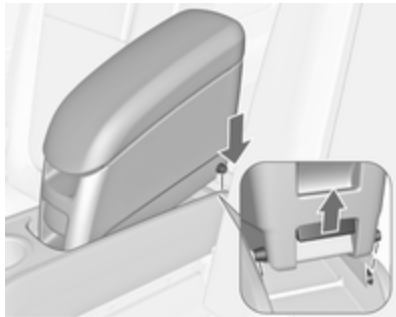

Lower the armrest at the rear. Pull the rear handle firmly and insert the rear guide pins into the guide rails. Release the handle.

Note
Install the armrest in the direction shown in the illustration. Otherwise the armrest may not engage properly.

Removing the armrest

Pull the rear handle firmly and raise the armrest at the rear. Press the front button and remove the armrest.

Removing the adapter

Unlock the adapter by turning the ignition key anticlockwise in the lock. The adapter is unlocked when the red mark is visible.

Push the adapter rearward and remove.

Seat belts

The seat belts are locked during heavy acceleration or deceleration of the vehicle holding the occupants in the sitting position. Therefore the risk of injury is considerably reduced.

⚠ Warning

Fasten seat belt before each trip.

In the event of an accident, people not wearing seat belts endanger their fellow occupants and themselves.

Seat belts are designed to be used by only one person at a time. Child restraint system ⇨ 55.

Periodically check all parts of the belt system for damage, pollution and proper functionality.

Have damaged components replaced. After an accident, have the belts and triggered belt pretensioners replaced by a workshop.

Note
Make sure that the belts are not damaged by shoes or sharp-edged objects or trapped. Prevent dirt from getting into the belt retractors.

Seat belt reminder ⇨ 95.

Belt force limiters

Stress on the body is reduced by the gradual release of the belt during a collision.

Belt pretensioners

In the event of a head-on or rear-end collision of a certain severity, the front seat belts are tightened.

⚠Warning

Incorrect handling (e.g. removal or fitting of belts) can trigger the belt pretensioners.

Deployment of the belt pretensioners is indicated by continuous illumination of control indicator ⇨ 95.

Triggered belt pretensioners must be replaced by a workshop. Belt pretensioners can only be triggered once.

Note
Do not affix or install accessories or other objects that may interfere with the operation of the belt pretensioners. Do not make any modifications to belt pretensioner components as this will invalidate the vehicle type approval.

Three-point seat belt

Fastening seat belt

Withdraw the belt from the retractor, guide it untwisted across the body and insert the latch plate into the buckle. Tighten the lap belt regularly whilst driving by pulling the shoulder belt.

Seat belt reminder ⇨ 95.

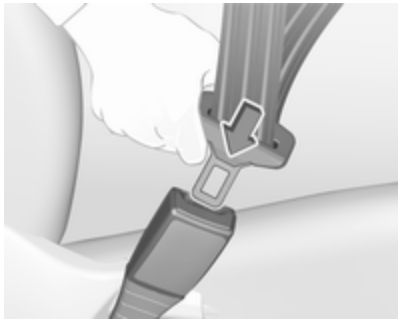

Loose or bulky clothing prevents the belt from fitting snugly. Do not place objects such as handbags or mobile phones between the belt and your body.

⚠Warning

The belt must not rest against hard or fragile objects in the pockets of your clothing.

Height adjustment

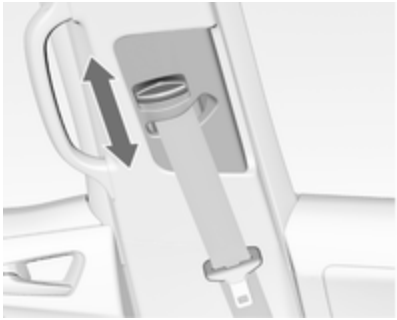

1. Pull belt out slightly.
2. Shift the height adjustment upwards or press button to disengage and push the height adjustment downwards.

Adjust the height so that the belt lies across the shoulder. It must not lie across the throat or upper arm.

Do not adjust while driving.

Removing seat belt

To release belt, press red button on belt buckle.

Seat belts on the rear seats

The centre rear seat is equipped with a particular three-point seat belt.

Pull latch plates out of belt retainer in roof.

Click bottom latch plate into right-hand buckle (**1**) at centre seat. Remove top latch plate from retainer, guide over shoulder and lap area with belt (do not twist) and click into left-hand buckle (**2**) at centre seat.

To remove the seat belt, first press the button on the left-hand buckle (**2**) and remove top latch plate. Then press the button on the right-hand buckle (**1**) and remove bottom latch plate. The seat belt retracts automatically.

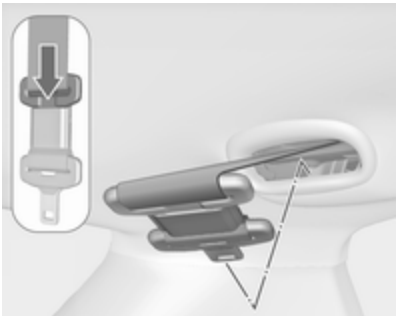

Push the top latch plate into the retainer. Fold over locked together latch plates against the seat belt.

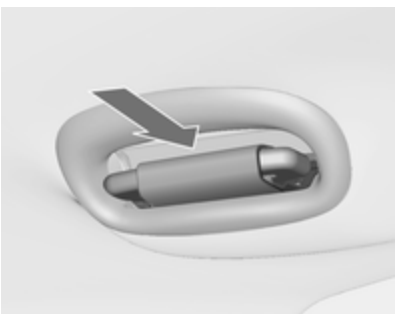

Insert in the seat belt holder in the roof with the lower latch plate pointing forward.

Using the seat belt while pregnant

⚠ Warning

The lap belt must be positioned as low as possible across the pelvis to prevent pressure on the abdomen.

Airbag system

The airbag system consists of a number of individual systems depending on the scope of equipment.

When triggered the airbags inflate within milliseconds. They also deflate so quickly that it is often unnoticeable during the collision.

⚠ Warning
If handled improperly the airbag systems can be triggered in an explosive manner.

Note
The airbag systems and belt pretensioner control electronics are located in the centre console area. Do not put any magnetic objects in this area.

Do not stick anything on the airbag covers and do not cover them with other materials.

Each airbag is triggered only once. Have deployed airbags replaced by a workshop. Furthermore, it might be necessary to have the steering wheel, the instrument panel, parts of the panelling, the door seals, handles and the seats replaced.

Do not make any modifications to the airbag system as this will invalidate the vehicle type approval.

When the airbags inflate, escaping hot gases may cause burns.

Control indicator for airbag systems ⇨ 95.

Child restraint systems on front passenger seat with airbag systems

Warning according to ECE R94.02:

EN: NEVER use a rearward-facing child restraint on a seat protected by an ACTIVE AIRBAG in front of it; DEATH or SERIOUS INJURY to the CHILD can occur.

DE: Nach hinten gerichtete Kindersitze NIEMALS auf einem Sitz verwenden, der durch einen davor befindlichen AKTIVEN AIRBAG geschützt ist, da dies den TOD oder SCHWERE VERLETZUNGEN DES KINDES zur Folge haben kann.

FR: NE JAMAIS utiliser un siège d'enfant orienté vers l'arrière sur un siège protégé par un COUSSIN GONFLABLE ACTIF placé devant lui, sous peine d'infliger des BLESSURES GRAVES, voire MORTELLES à l'ENFANT.

ES: NUNCA utilice un sistema de retención infantil orientado hacia atrás en un asiento protegido por un AIRBAG FRONTAL ACTIVO. Peligro de MUERTE o LESIONES GRAVES para el NIÑO.

RU: ЗАПРЕЩАЕТСЯ устанавливать детское удерживающее устройство лицом назад на сиденье автомобиля,

оборудованном фронтальной подушкой безопасности, если ПОДУШКА НЕ ОТКЛЮЧЕНА! Это может привести к СМЕРТИ или СЕРЬЕЗНЫМ ТРАВМАМ РЕБЕНКА.

NL: Gebruik NOOIT een achterwaarts gericht kinderzitje op een stoel met een ACTIEVE AIRBAG ervoor, om DODELIJK of ERNSTIG LETSEL van het KIND te voorkomen.

DA: Brug ALDRIG en bagudvendt autostol på et forsæde med AKTIV AIRBAG, BARNET kan komme i LIVSFARE eller komme ALVORLIGT TIL SKADE.

SV: Använd ALDRIG en bakåtvänd barnstol på ett säte som skyddas med en framförvarande AKTIV AIRBAG. DÖDSFALL eller ALLVARLIGA SKADOR kan drabba BARNET.

FI: ÄLÄ KOSKAAN sijoita taaksepäin suunnattua lasten turvaistuinta istuimelle, jonka edessä on AKTIIVINEN TURVATYYNY, LAPSI VOI KUOLLA tai VAMMAUTUA VAKAVASTI.

NO: Bakovervendt barnesikringsutstyr må ALDRI brukes på et sete med AKTIV KOLLISJONSPUTE foran, da det kan føre til at BARNET utsettes for LIVSFARE og fare for ALVORLIGE SKADER.

PT: NUNCA use um sistema de retenção para crianças voltado para trás num banco protegido com um AIRBAG ACTIVO na frente do mesmo, poderá ocorrer a PERDA DE VIDA ou FERIMENTOS GRAVES na CRIANÇA.

IT: Non usare mai un sistema di sicurezza per bambini rivolto all'indietro su un sedile protetto da AIRBAG ATTIVO di fronte ad esso: pericolo di MORTE o LESIONI GRAVI per il BAMBINO!

EL: ΠΟΤΕ μη χρησιμοποιείτε παιδικό κάθισμα ασφαλείας με φορά προς τα πίσω σε κάθισμα που προστατεύεται από μετωπικό ΕΝΕΡΓΟ ΑΕΡΟΣΑΚΟ, διότι το παιδί μπορεί να υποστεί ΘΑΝΑΣΙΜΟ ή ΣΟΒΑΡΟ ΤΡΑΥΜΑΤΙΣΜΟ.

PL: NIE WOLNO montować fotelika dziecięcego zwróconego tyłem do kierunku jazdy na fotelu, przed którym znajduje się WŁĄCZONA PODUSZKA POWIETRZNA. Niezastosowanie się do tego zalecenia może być przyczyną ŚMIERCI lub POWAŻNYCH OBRAŻEŃ u DZIECKA.

TR: Arkaya bakan bir çocuk emniyet sistemini KESİNLİKLE önünde bir AKTİF HAVA YASTIĞI ile korunmakta olan bir koltukta kullanmayınız. ÇOCUK ÖLEBİLİR veya AĞIR ŞEKİLDE YARALANABİLİR.

UK: НІКОЛИ не використовуйте систему безпеки для дітей, що встановлюється обличчям назад, на сидінні з УВІМКНЕНОЮ ПОДУШКОЮ БЕЗПЕКИ, інакше це може призвести до СМЕРТІ чи СЕРЙОЗНОГО ТРАВМУВАННЯ ДИТИНИ.

HU: SOHA ne használjon hátrafelé néző biztonsági gyerekülést elölről AKTÍV LÉGZSÁKKAL védett ülésen, mert a GYERMEK HALÁLÁT vagy KOMOLY SÉRÜLÉSÉT okozhatja.

HR: NIKADA nemojte koristiti sustav zadržavanja za djecu okrenut prema natrag na sjedalu s AKTIVNIM ZRAČNIM JASTUKOM ispred njega, to bi moglo dovesti do SMRTI ili OZBILJNJIH OZLJEDA za DIJETE.

SL: NIKOLI ne nameščajte otroškega varnostnega sedeža, obrnjenega v nasprotni smeri vožnje, na sedež z AKTIVNO ČELNO ZRAČNO BLAZINO, saj pri tem obstaja nevarnost RESNIH ali SMRTNIH POŠKODB za OTROKA.

SR: NIKADA ne koristiti bezbednosni sistem za decu u kome su deca okrenuta unazad na sedištu sa AKTIVNIM VAZDUŠNIM JASTUKOM ispred sedišta zato što DETE može da NASTRADA ili da se TEŠKO POVREDI.

MK: НИКОГАШ не користете детско седиште свртено наназад на седиште заштитено со АКТИВНО ВОЗДУШНО ПЕРНИЧЕ пред него, затоа што детето може ДА ЗАГИНЕ или да биде ТЕШКО ПОВРЕДЕНО.

BG: НИКОГА не използвайте детска седалка, гледаща назад, върху седалка, която е защитена чрез АКТИВНА ВЪЗДУШНА ВЪЗГЛАВНИЦА пред нея - може да се стигне до СМЪРТ или СЕРИОЗНО НАРАНЯВАНЕ на ДЕТЕТО.

RO: Nu utilizați NICIODATĂ un scaun pentru copil îndreptat spre partea din spate a mașinii pe un scaun protejat de un AIRBAG ACTIV în fața sa; acest lucru poate duce la DECESUL sau VĂTĂMAREA GRAVĂ a COPILULUI.

CS: NIKDY nepoužívejte dětský zádržný systém instalovaný proti směru jízdy na sedadle, které je chráněno před sedadlem AKTIVNÍM AIRBAGEM. Mohlo by dojít k VÁŽNÉMU PORANĚNÍ nebo ÚMRTÍ DÍTĚTE.

SK: NIKDY nepoužívajte detskú sedačku otočenú vzad na sedadle chránenom AKTÍVNYM AIRBAGOM, pretože môže dôjsť k SMRTI alebo VÁŽNYM ZRANENIAM DIEŤAŤA.

LT: JOKIU BŪDU nemontuokite atgal atgręžtos vaiko tvirtinimo sistemos sėdynėje, prieš kurią įrengta AKTYVI ORO PAGALVĖ, nes VAIKAS GALI ŽŪTI arba RIMTAI SUSIŽALOTI.

LV: NEKĀDĀ GADĪJUMĀ neizmantojiet uz aizmuguri vērstu bērnu sēdeklīti sēdvietā, kas tiek aizsargāta ar tās priekšā uzstādītu AKTĪVU DROŠĪBAS SPILVENU, jo pretējā gadījumā BĒRNS var gūt SMAGAS TRAUMAS vai IET BOJĀ.

ET: ÄRGE kasutage tahapoole suunatud lapseturvaistet istmel, mille ees on AKTIIVSE TURVAPADJAGA kaitstud iste, sest see võib põhjustada LAPSE SURMA või TÕSISE VIGASTUSE.

MT: QATT tuża trażżin għat-tfal li jħares lejn in-naħa ta' wara fuq sit protett b'AIRBAG ATTIV quddiemu; dan jista' jikkawża l-MEWT jew ĠRIEĦI SERJI lit-TFAL.

Beyond the warning required by ECE R94.02, for safety reasons never use a forward-facing child restraint system on the passenger seat with an active front airbag.

⚠ Danger

Do not use a child restraint system on the passenger seat with active front airbag.

The airbag label is located on both sides of the front passenger sun visor.

Airbag deactivation ⇨ 53.

Front airbag system

The front airbag system consists of one airbag in the steering wheel and one in the instrument panel on the front passenger side. These can be identified by the word **AIRBAG**.

The front airbag system is triggered in the event of a front-end impact of a certain severity. The ignition must be switched on.

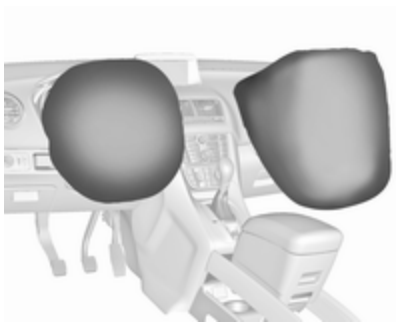

The inflated airbags cushion the impact, thereby reducing the risk of injury to the upper body and head of the front seat occupants considerably.

⚠ Warning

Optimum protection is only provided when the seat is in the proper position.

Seat position ⇨ 37.

Keep the area in which the airbag inflates clear of obstructions.

Fit the seat belt correctly and engage securely. Only then is the airbag able to protect.

Side airbag system

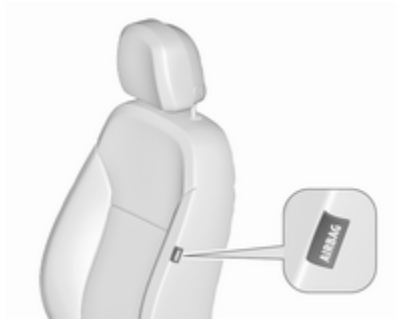

The side airbag system consists of an airbag in each front seat backrest. This can be identified by the word **AIRBAG**.

The side airbag system is triggered in the event of a side impact of a certain severity. The ignition must be switched on.

The inflated airbags cushion the impact, thereby reducing the risk of injury to the upper body and pelvis in the event of a side-on collision considerably.

⚠ Warning

Keep the area in which the airbag inflates clear of obstructions.

Note
Only use protective seat covers that have been approved for the vehicle. Be careful not to cover the airbags.

Curtain airbag system

The curtain airbag system consists of an airbag in the roof frame on each side. This can be identified by the word **AIRBAG** on the roof pillars.

The curtain airbag system is triggered in the event of a side-on impact of a certain severity. The ignition must be switched on.

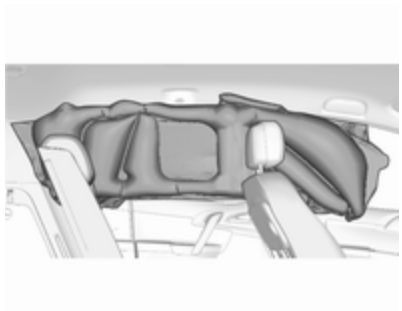

The inflated airbags cushion the impact, thereby reducing the risk of injury to the head in the event of a side-on impact considerably.

⚠ Warning

Keep the area in which the airbag inflates clear of obstructions.

The hooks in the roof frame are only suitable for hanging up light articles of clothing, without coat hangers. Do not keep any items in these clothes.

Airbag deactivation

The front passenger airbag system must be deactivated if a child restraint system is to be fitted on this seat. The side airbag and curtain airbag systems, the belt pretensioners and all driver airbag systems will remain active.

The front passenger airbag system can be deactivated via a key-operated switch on the right side of the instrument panel.

Use the ignition key to choose the position:

- : front passenger airbag is deactivated and will not inflate in the event of a collision. Control indicator illuminates continuously in the centre console. A child restraint system can be installed in accordance with the chart **Child restraint installation locations** ⇨ 57. No adult person is allowed to occupy the front passenger seat
- : front passenger airbag is active. A child restraint system must not be installed

⚠ Danger

Risk of fatal injury for a child using a child restraint system on a seat with activated front passenger airbag.

Risk of fatal injury for an adult person on a seat with deactivated front passenger airbag.

If the control indicator illuminates for approx. 60 seconds after the ignition is switched on, the front passenger airbag system will inflate in the event of a collision.

If both control indicators are illuminated at the same time, there is a system failure. The status of the system is not discernible, therefore no person is allowed to occupy the front passenger seat. Contact a workshop immediately.

Change status only when the vehicle is stationary with the ignition off.

Status remains until the next change.

Control indicator for airbag deactivation ⇨ 95.

Child restraints

Child restraint systems

We recommend the Opel child restraint system DUO which is tailored specifically to the vehicle.

When using the Opel child restraint system DUO, move the rear outboard seats into position **2** ⇨ 42. We recommend fastening the Opel child restraint system DUO by using the following securing systems in combination:

ISOFIX

Three-point seat belt

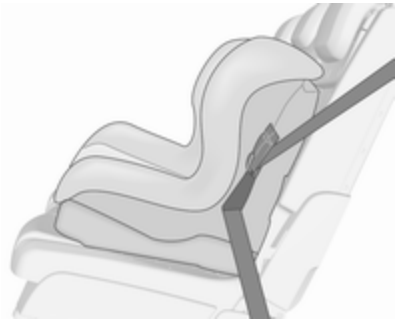

Top-Tether

When a child restraint system is being used, pay attention to the following usage and installation instructions and also those supplied with the child restraint system.

Always comply with local or national regulations. In some countries, the use of child restraint systems is forbidden on certain seats.

⚠ Warning

If using a child restraint system on the front passenger seat, the airbag system for the front passenger seat must be deactivated; if not, the triggering of the front airbag poses a risk of fatal injury to the child.

This is especially the case if rearfacing child restraint systems are used on the front passenger seat.

Airbag deactivation ⇨ 53,

Airbag label ⇨ 49.

Selecting the right system

The rear seats are the most convenient location to fasten a child restraint system.

Children should travel facing rearwards in the vehicle as long as possible. This makes sure that the child's backbone, which is still very weak, is under less strain in the event of an accident.

Suitable are restraint systems that comply with valid UN ECE regulations. Check local laws and regulations for mandatory use of child restraint systems.

Ensure that the child restraint system to be installed is compatible with the vehicle type.

Ensure that the mounting location of the child restraint system within the vehicle is correct, see following tables.

Allow children to enter and exit the vehicle only on the side facing away from the traffic.

When the child restraint system is not in use, secure the seat with a seat belt or remove it from the vehicle.

Note

Do not stick anything on the child restraint systems and do not cover them with any other materials.

A child restraint system which has been subjected to stress in an accident must be replaced.

Child restraint installation locations

Permissible options for fitting a child restraint system

Weight and age class	On front passenger seat activated airbag	On front passenger seat deactivated airbag	On rear outboard seats	On rear centre seat
Group 0: up to 10 kg or approx. 10 months	X	U[1]	U[2]	U[3]
Group 0+: up to 13 kg or approx. 2 years	X	U[1]	U[2]	U[3]
Group I: 9 to 18 kg or approx. 8 months to 4 years	X	U[1]	U[2]	U[3]
Group II: 15 to 25 kg or approx. 3 to 7 years	X	X	U[2]	U[3]
Group III: 22 to 36 kg or approx. 6 to 12 years	X	X	U[2]	U[3]

[1] : if the child restraint system is being secured using a three-point seat belt, move seat height adjustment to uppermost position and ensure that vehicle seat belt runs forwards from the upper anchorage point. Adjust seat backrest inclination as far as necessary to a vertical position to ensure that the belt is tight on the buckle side.
[2] : only if outboard seats are in position **1** or **2**, ⇨ 42.
[3] : only if outboard seats are flush with the centre seat (position **2**, ⇨ 42).
U : universal suitability in conjunction with three-point seat belt.
X : no child restraint system permitted in this weight and age class.

Permissible options for fitting an ISOFIX child restraint system

Weight class	Size class	Fixture	On front passenger seat	On rear outboard seats	On rear centre seat
Group 0: up to 10 kg or approx. 10 months	E	ISO/R1	X	IL[1]	X
Group 0+: up to 13 kg or approx. 2 years	E	ISO/R1	X	IL[1]	X
	D	ISO/R2	X	IL[1]	X
	C	ISO/R3	X	IL[1]	X
Group I: 9 to 18 kg or approx. 8 months to 4 years	D	ISO/R2	X	IL[1]	X
	C	ISO/R3	X	IL[1]	X
	B	ISO/F2	X	IL[1], IUF[1, 2]	X
	B1	ISO/F2X	X	IL[1], IUF[1, 2]	X
	A	ISO/F3	X	IL[1], IUF[1, 2]	X
Group II: 15 to 25 kg or approx. 3 to 7 years			X	IL[1]	X
Group III: 22 to 36 kg or approx. 6 to 12 years			X	IL[1]	X

IL : suitable for particular ISOFIX restraint systems of the 'specific-vehicle', 'restricted' or 'semi-universal' categories. The ISOFIX restraint system must be approved for the specific vehicle type.
IUF : suitable for ISOFIX forward-facing child restraint systems of universal category approved for use in this weight class.
X : no ISOFIX child restraint system approved in this weight class.
[1] : only if outboard seats are in position **1** or **2**, ⇨ 42.
[2] : only for Opel child restraint system DUO: If the seat is secured as recommended ⇨ 55, the outboard seats must be in position **2** ⇨ 42.

ISOFIX size class and seat device

A – ISO/F3 : forward-facing child restraint system for children of maximum size in the weight class 9 to 18 kg.
B – ISO/F2 : forward-facing child restraint system for smaller children in the weight class 9 to 18 kg.
B1 – ISO/F2X : forward-facing child restraint system for smaller children in the weight class 9 to 18 kg.
C – ISO/R3 : rear-facing child restraint system for children of maximum size in the weight class up to 18 kg.
D – ISO/R2 : rear-facing child restraint system for smaller children in the weight class up to 18 kg.
E – ISO/R1 : rear-facing child restraint system for young children in the weight class up to 13 kg.

ISOFIX child restraint systems

Fasten vehicle-approved ISOFIX child restraint systems to the ISOFIX mounting brackets. Specific vehicle ISOFIX child restraint system positions are marked in the table by IL.

ISOFIX mounting brackets are indicated by a label on the backrest.

Top-tether fastening eyes

Top-Tether fastening eyes are marked with the symbol for a child seat.

In addition to the ISOFIX mounting, fasten the Top-Tether strap to the Top-Tether fastening eyes. The strap must run between the two guide rods of the head restraint.

ISOFIX child restraint systems of universal category positions are marked in the table by IUF.

Storage

Storage compartments **61**
Glovebox 61
Cupholders 61
Front storage 63
Underseat storage 63
Armrest storage 63
Rear carrier system 64
Load compartment **73**
Rear storage 74
Load compartment cover 74
Rear floor storage cover 75
Lashing eyes 76
Safety net 76
Folding tray 78
Warning triangle 78
First aid kit 78
Roof rack system **79**
Roof rack 79
Loading information **79**

Storage compartments

⚠ Warning

Do not store heavy or sharp objects in the storage compartments. Otherwise, the storage compartment lid could open and vehicle occupants could be injured by objects being thrown around in the event of hard braking, a sudden change in direction or an accident.

Glovebox

The glovebox features a pen holder, a coin holder and an adapter for the locking wheel bolts.

Inside the glovebox there is a compartment for the Owner's Manual. Pull the lug to open the compartment.

The glovebox should be closed whilst driving.

Cupholders

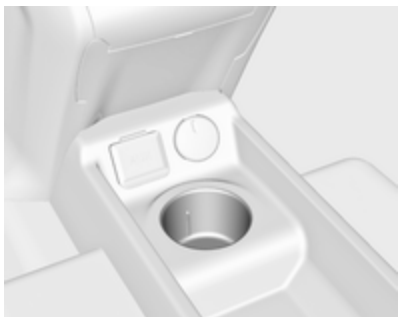

A cupholder is located in the centre console.

Detachable cupholder

A cupholder can be attached either to the upper or lower guide rails in the front console.

Fold the frame out of its initial position before using.

Note
If the cupholder is installed in the lower guide rail and the detachable armrest in the upper guide rail, ensure that the frame is folded back into the initial position before moving any of the parts.

Otherwise, the armrest and the cupholder might be damaged while moving them one above the other.

Armrest ⇨ 40.

Installing cupholder

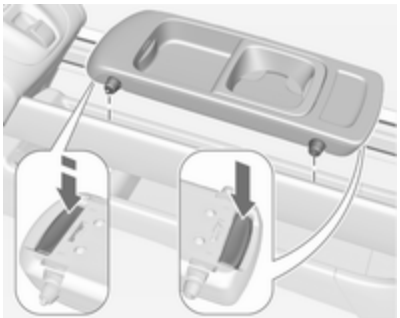

Press the buttons at the front and rear and insert the guide pins into the upper or lower guide rails. The front button must be pressed firmly.

Release the buttons and move the cupholder until it engages audibly.

Note
Install the cupholder in the direction as shown in the illustration. Otherwise the cupholder may not engage properly.

Moving cupholder

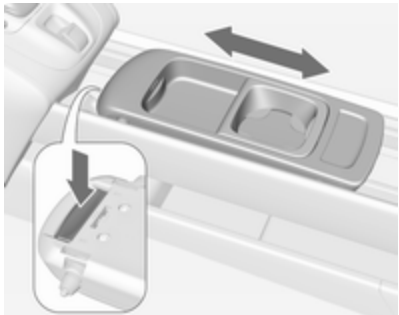

Press the front button slightly and move the cupholder to the desired position. Release the button and move the cupholder until it engages audibly.

Removing cupholder

Press the buttons at the front and rear and remove the cupholder. The front button must be pressed firmly.

Cupholder on armrest adapter

A further cupholder is integrated to the armrest adapter of the rear centre seat.

Armrest adapter ⇨ 43.

Front storage

A storage compartment is located next to the steering wheel.

Underseat storage

Lift drawer at recessed edge and pull out. Maximum load: 3 kg. To close, push the drawer in and engage.

Armrest storage

Storage in the detachable armrest

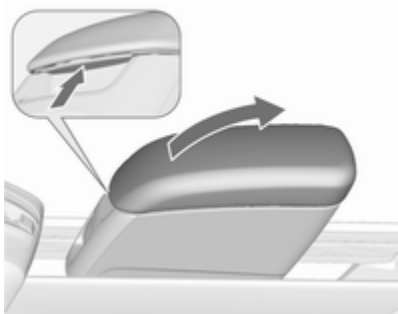

Push button and fold the armrest lid upwards. The armrest contains a storage compartment.

The armrest can also be installed on the folded centre rear seat ⇨ 43.

Rear carrier system

The rear carrier system (Flex-Fix system) allows bicycles to be attached to a pull-out carrier integrated into the vehicle floor. The transportation of other objects is not permitted.

The maximum load of the rear carrier system is 40 kg. The maximum load per bicycle is 20 kg.

The wheelbase of a bicycle must not exceed 1.2 metres. Otherwise the secure fastening of a bicycle is not possible.

If not in use, the rear carrier system can be slid back into the vehicle floor.

There must not be any objects on the bicycles that could become loose during transportation.

Caution

Do not attach bicycles with carbon pedal cranks to bicycle carriers. The bicycles may get damaged.

Extending

Open the tailgate.

⚠ Warning

No-one should be in the extension zone of the rear carrier system, risk of injury.

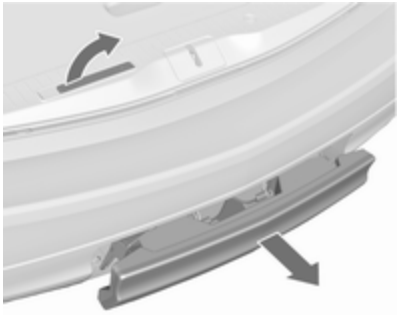

Pull release lever up. The system disengages and travels quickly out of the bumper.

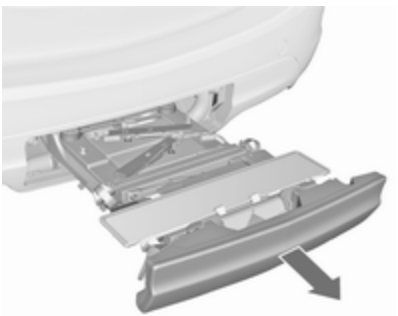

Completely pull out the rear carrier system until you hear it engage.

Ensure that it is not possible to push in the rear carrier system without pulling the release lever again

⚠ Warning

It is only permissible to fit objects to the rear carrier system if the system has been correctly engaged. If the rear carrier system will not engage correctly, do not fit objects to the system and slide the system back. Seek the assistance of a workshop.

Install the tail lamps

First remove the rear tail lamp (**1**), then the front (**2**) tail lamp from the recesses.

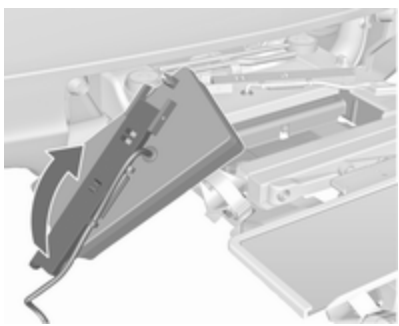

Open out the lamp support on the back of the tail lamp completely.

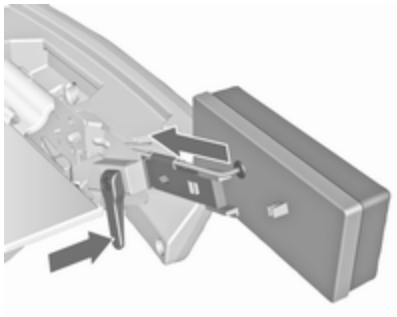

Push the clamping lever down and push the lamp support into the retainer until it engages.

Perform this procedure for both tail lamps.

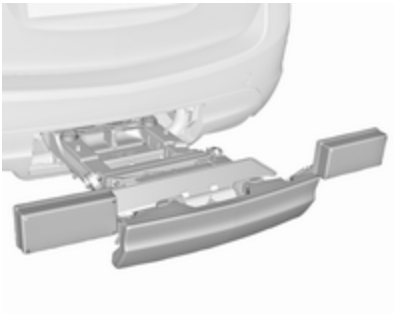

Check the cable and lamp position to make sure these are correctly installed and are securely located.

Lock the rear carrier system

Swivel the right clamping lever (**1**) first, followed by the left clamping lever (**2**), until a resistance is noticeable.

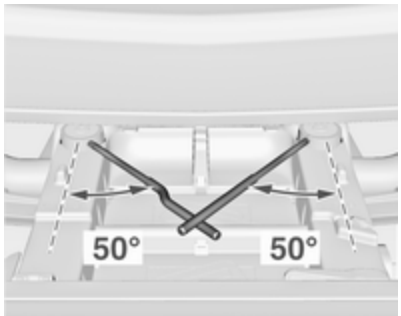

The rear carrier system is locked when the clamping levers are swivelled by approx. 50°. Otherwise safe functionality is not guaranteed.

Note
Close the tailgate.

Unfold the number plate holder

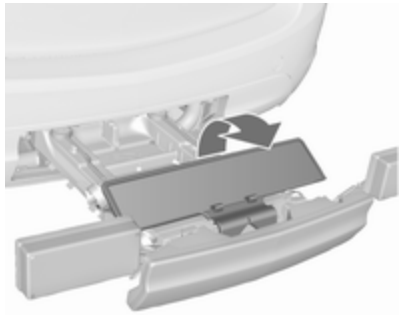

Unfold the holder for the number plate.

Affix the number plate before first usage of the rear carrier system.

Unfold pedal crank recesses

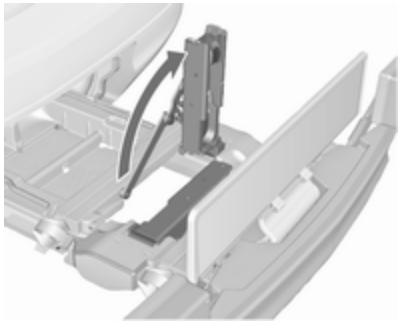

Fold one or both pedal crank recesses upwards until the diagonal support engages.

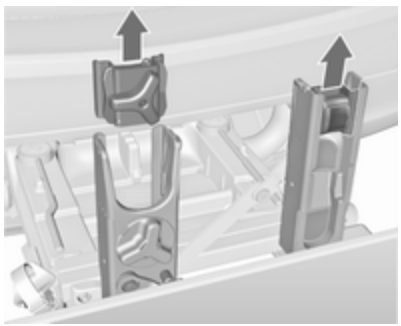

Remove the pedal crank mounts from the pedal crank recesses.

Adapting the rear carrier system to a bicycle

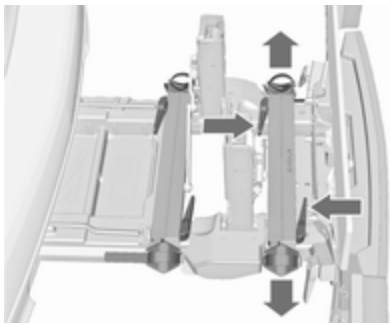

Press the release lever and withdraw the wheel recesses.

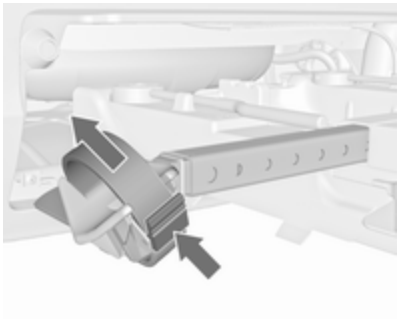

Push the release lever on the strap retainer and remove the strap retainer.

Prepare the bicycle for attachment

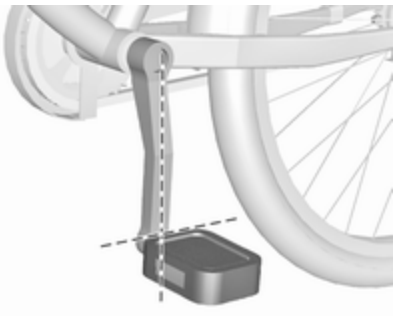

Note
The maximum width for the pedal crank is 38.3 mm and the maximum depth is 14.4 mm.

Rotate the left pedal (without a chain cog) vertically downwards. The pedal on the left pedal crank must be horizontal.

The front bicycle must have its front wheel facing left.

The rear bicycle must have its front wheel facing right.

Attaching a bicycle to the rear carrier system

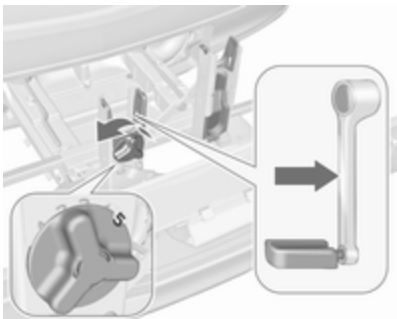

With the rotary lever on the pedal crank recess, roughly adapt the adjustable pedal crank unit to the protrusion of the pedal crank.

If the bicycle has straight pedal cranks, unscrew the pedal crank unit completely (position **5**).

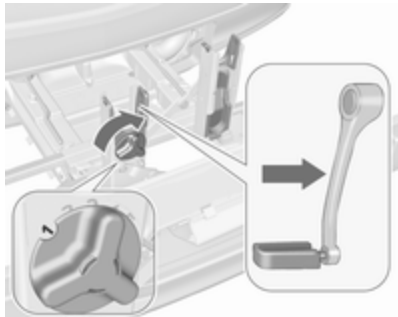

If the bicycle has curved pedal cranks, screw in the pedal crank unit all the way (position **1**).

Put on the bicycle. The pedal crank here must be placed in the pedal crank recess opening as shown in the illustration.

Caution

Make sure that the pedal does not touch the surface of the rear end carrier. Otherwise the crankset might be damaged during the transport.

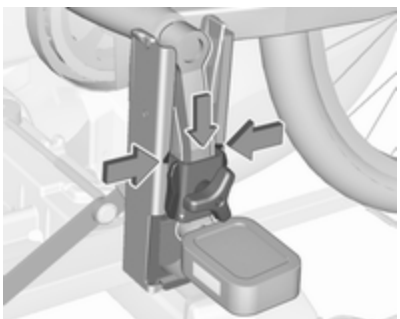

Insert pedal crank mount into outer rail of each pedal crank recess from above and slide downwards until at least underneath the notching.

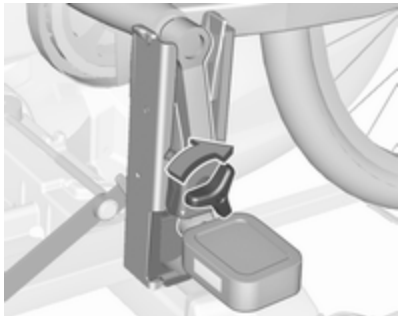

Attach the pedal crank by rotating the attachment screw on the pedal crank mount.

Place the wheel recesses so that the bicycle is roughly horizontal. Here, the distance between the pedals and the tailgate should be at least 5 cm.

Both bicycle tyres must be in the wheel recesses.

Caution

Make sure to pull out the wheel recesses as far as necessary to have both bicycle tyres placed in the recesses. Otherwise a horizontal mounting of the bicycle is not ensured. Disregard could lead to damage of the bicycle wheels caused by hot exhaust fumes.

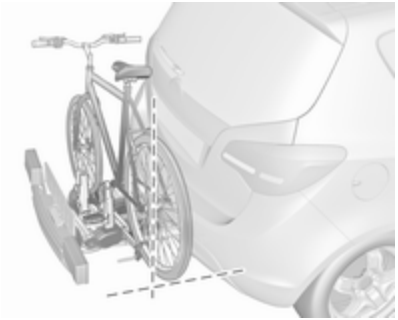

Align the bicycle in the longitudinal direction of the vehicle: Slightly loosen the pedal mount.

Place the bicycle upright using the rotary lever on the pedal crank recess.

If the two bicycles obstruct one another, the relative positions of the bicycles can be adapted by adjusting the wheel recesses and the rotary lever on the pedal crank recess until the bicycles no longer touch one another. Make sure there is sufficient clearance from the vehicle.

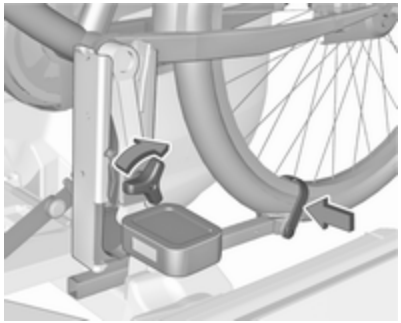

Tighten the attachment screw for the pedal bearing mount to its maximum point by hand.

Secure both bicycle wheels to wheel recesses using strap retainers.

Check the bicycle to make sure it is secure.

Caution
Ensure gap between bicycle and vehicle is at least 5 cm. If necessary, loosen handlebar and swivel sideways.

The settings for the wheel recesses and on the rotary lever on the pedal crank recess should be noted and saved for each bicycle. Correct presetting will facilitate refitting of the bicycle.

Note
It is recommended to attach a warning sign at the rearmost bicycle to increase visibility.

Removing a bicycle from the rear carrier system

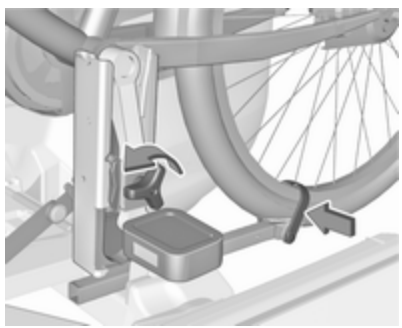

Undo strap retainers on both bicycle tyres.

Hold on to the bicycle, loosen the attachment screw for the pedal bearing mount, then lift the pedal bearing mount to remove it.

Retracting the rear carrier system

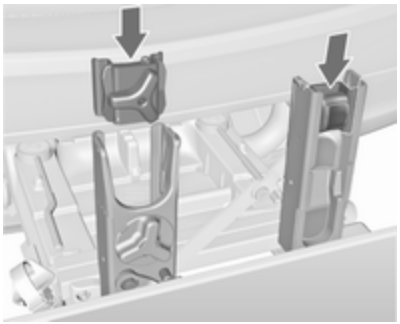

Push the pedal crank mounts into the pedal crank recess as shown in the illustration.

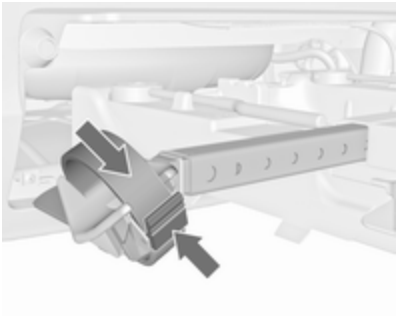

Insert the strap retainer and pull tightly downwards as far as possible.

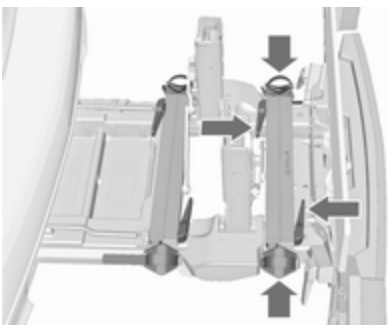

Press release lever and slide in wheel recesses all the way as far as they will go.

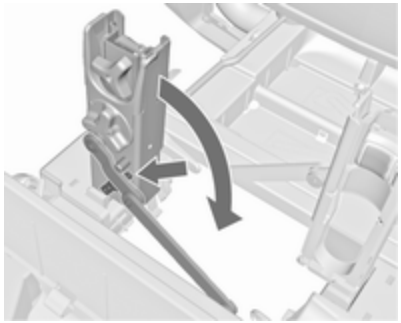

Disengage the locking lever on the diagonal support and fold both pedal crank recesses down.

⚠ Warning
Risk of pinching.

Remove number plate and fold down the number plate holder.

Swivel first the left clamping lever (**1**), followed by the right clamping lever (**2**), until they stop.

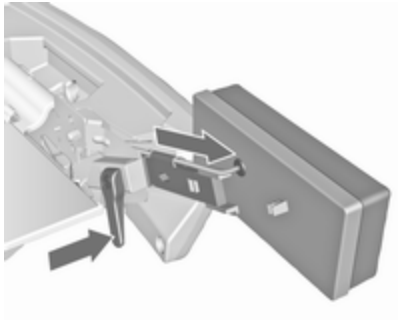

Push the clamping lever down and pull both lamp supports out of the recesses.

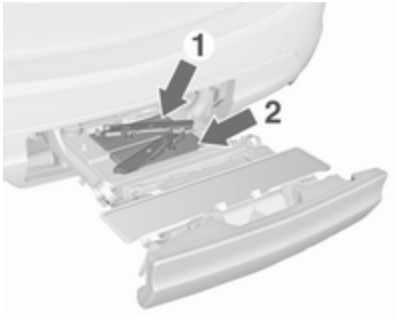

Fold in the lamp supports on the backs of the tail lamps.

First place the front tail lamp (**1**), then the rear tail lamp (**2**) in the recesses and push down as far as possible. Push cables all the way into all guides in order to prevent damage.

Open the tailgate.

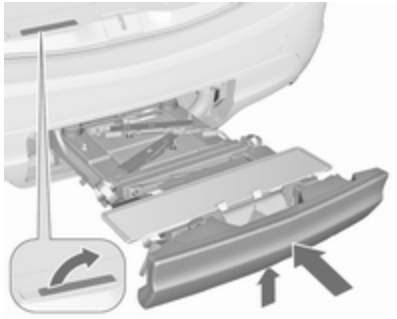

Push the release lever up and hold. Lift the system slightly and push it into the bumper until it engages.

Release lever must return to original position.

⚠Warning

If the system cannot be correctly engaged, please seek the assistance of a workshop.

Load compartment

Folding down rear seat backrests

The rear seat backrest is divided into three parts. All parts can be folded down individually to increase the size of the load compartment.

⚠ Warning

Do not stow objects under or behind the seats. The objects might be damaged and prevent the guide rails from locking properly.

A completely flat load bay is created if first the centre seat and then the outer rear seat backrests are folded down.

Caution

Do not fold the outer seat backrests while the seats are in the inner position. The seats could be damaged.

Remove the load compartment cover if necessary ⇨ 74.

Press the catch to release and push the head restraint downwards ⇨ 35.

Take the seat belt out of the retaining clip on the backrest.

Pull the handle on the front side of the backrest and fold down the backrest onto the seat cushion. The seat is lowered automatically if the centre seat is folded down.

The backrests can also be folded from the load compartment.

Pull the handle on the back side of the backrest and fold down the backrest.

To fold up, pull the handle and raise the backrests into an upright position until they engage audibly.

⚠Warning

When folding up, ensure that backrests are securely locked in position before driving. Failure to do so may result in personal injury or damage to load or vehicle in the event of heavy braking or collision.

Rear storage

On the left side of the load compartment there is a stowage compartment.

Turn the fastener anticlockwise and fold down the cover.

Load compartment cover

Do not place any objects on the cover.

Removing the cover

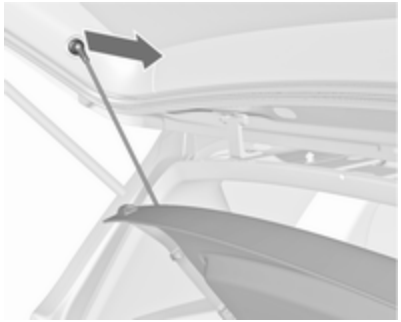

Unhook retaining straps from tailgate.

Lift cover at the rear and push it upwards at the front.

Remove the cover.

Stowing the cover

Unhook retaining straps from tailgate.

Lift cover at the rear and push it upwards out of the side guides at the front.

Stow the cover behind the rear seats.

Fitting the cover

Engage cover in side guides and fold downwards. Attach retaining straps to tailgate.

Rear floor storage cover

The rear floor cover can be raised.

Fold it up and lift the load compartment cover slightly.

Pull out the hook at the left sidewall of the load compartment to hold the rear floor cover upright.

Double load-bay floor

The double load-bay floor can be inserted in the load compartment in two positions:

- directly above the cover for the spare wheel well or the rear floor cover,
- in the upper openings in the load compartment.

To remove, lift the load-bay floor using the recess and pull backwards.

To insert, push the load-bay floor forwards into the corresponding guide, then lower.

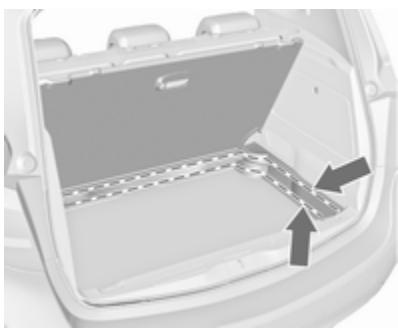

If mounted in the upper position, the space between the load-bay floor and the spare wheel well cover can be used as a stowage compartment.

In this position, if the rear seat backrests are folded forwards, an almost completely flat load bay is created.

In the upper position, the double load-bay floor is able to withstand a maximum load of 100 kg. In the lower position, the double load-bay floor is able to withstand the maximum permissible load.

In models with a tyre repair kit, the spare wheel recess may be used as an additional stowage compartment. Tyre repair kit ⇨ 202.

Lashing eyes

The lashing eyes are designed to secure items against slippage, e.g. using lashing straps or luggage net.

Safety net

The safety net can be installed behind the front seats.

Passengers must not be transported behind the safety net.

Installation

There are two installation openings in the roof frame: suspend rod of net at one side, push to the front and engage. Extend rod, suspend at other side, push to the front and engage.

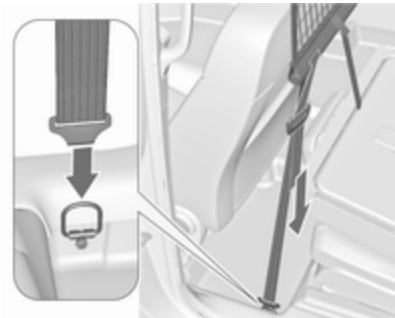

Suspend hooks of net tensioning belts in lashing eyes in the floor behind the front seats. Tension the net by pulling the loose end of the belt.

Suspend and tighten on both sides.

Removal

Tilt length adjuster of the net tensioning belts upwards and detach the belts on both sides. Disengage the upper rod on one side, disengage other side and remove from the openings.

Stowage

Place tensioning straps as shown in illustration and align with safety net.

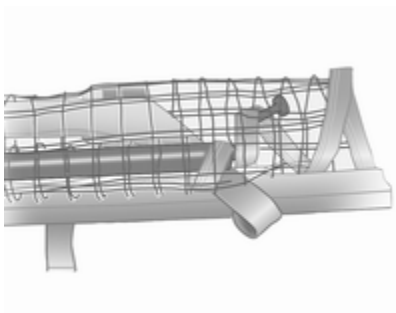

Roll the upper net rod down to approximately over the middle.

Place the upper net rod over the tensioning straps next to the lower net rod. The hooks on the upper net rod must point away from the lower net rod.

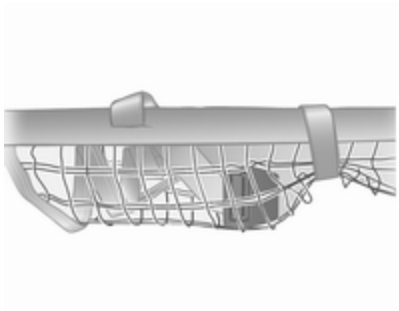

Fasten Velcro tape tightly about the net next to the length adjusters. The length adjusters and net rods must lie flat next to each other.

Stow safety net in the space between the double load-bay floor in the load compartment. Rear floor storage cover ⇨ 75.

Folding tray

Located in the front seat backrests.

Open by pulling upwards until it engages.

Fold away by pressing down past the resistance point.

Do not place any heavy objects on the folding tray.

Warning triangle

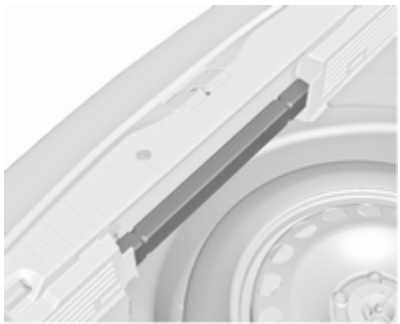

Stow the warning triangle in the space at the rear side of the load compartment.

First aid kit

Stow the first aid kit and the high visibility vest under the driver's seat.

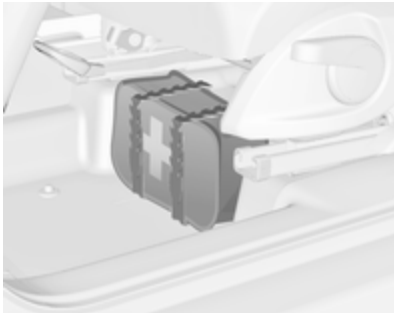

Use the straps.

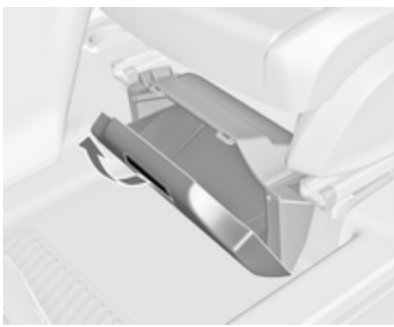

Depending on the vehicle, a box is located under the driver's seat. Pull handle and fold down the cover. Maximum load: 1.5 kg.

Roof rack system

Roof rack

For safety reasons and to avoid damage to the roof, the vehicle approved roof rack system is recommended. For further information contact your workshop.

Follow the installation instructions and remove the roof rack when not in use.

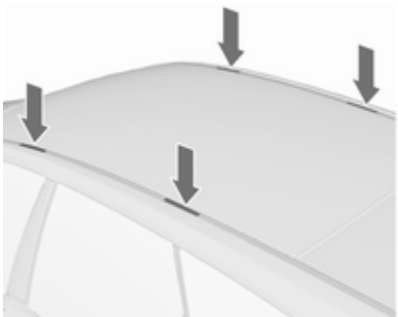

Detach the cover from each mounting point.

Loading information

- Heavy objects in the load compartment should be placed against the seat backrests. Ensure that the backrests are securely engaged. If objects can be stacked, heavier objects should be placed at the bottom.
- Secure objects with lashing straps attached to the lashing eyes ⇨ 76.

- Use the hook at the left sidewall of the load compartment for hanging up carrier bags. Pull out the hook. Maximum load: 3 kg.
- Secure loose objects in the load compartment to prevent them from sliding.
- When transporting objects in the load compartment, the backrests of the rear seats must not be angled forward.
- Do not allow the load to protrude above the upper edge of the backrests.

- Do not place any objects on the load compartment cover or the instrument panel, and do not cover the sensor on top of the instrument panel.
- The load must not obstruct the operation of the pedals, parking brake and gear selector, or hinder the freedom of movement of the driver. Do not place any unsecured objects in the interior.
- Do not drive with an open load compartment.

⚠ Warning

Always make sure that the load in the vehicle is securely stowed. Otherwise objects can be thrown around inside the vehicle and cause personal injury or damage to the load or vehicle.

- The payload is the difference between the permitted gross vehicle weight (see identification plate ⇨ 224) and the EC kerb weight.

  To calculate the payload, enter the data for your vehicle in the weights table at the front of this manual.

  The EC kerb weight includes weights for the driver (68 kg), luggage (7 kg) and all fluids (fuel tank 90% full).

  Optional equipment and accessories increase the kerb weight.
- Driving with a roof load increases the sensitivity of the vehicle to cross-winds and has a detrimental effect on vehicle handling due to the vehicle's higher centre of gravity. Distribute the load evenly and secure it properly with retaining straps. Adjust the tyre pressure and vehicle speed according to the load conditions. Check and retighten the straps frequently.

  Do not drive faster than 120 km/h.

  The permissible roof load is 60 kg. The roof load is the combined weight of the roof rack and the load.

Instruments and controls

Controls **82**
Steering wheel adjustment 82
Steering wheel controls 82
Heated steering wheel 82
Horn 83
Windscreen wiper/washer 83
Rear window wiper/washer 85
Outside temperature 85
Clock 86
Power outlets 87
Cigarette lighter 88
Ashtrays 88
Warning lights, gauges and indicators **89**
Instrument cluster 89
Speedometer 89
Odometer 89
Trip odometer 89
Tachometer 89
Fuel gauge 90
Fuel selector 90
Engine coolant temperature gauge 90
Service display 91
Control indicators 92
Turn signal 94
Seat belt reminder 95
Airbag and belt tensioners 95
Airbag deactivation 95
Charging system 96
Malfunction indicator light 96
Service vehicle soon 96
Brake and clutch system 96
Operate pedal 96
Electric parking brake 97
Electric parking brake fault 97
Antilock brake system (ABS) 97
Upshift 97
Variable effort steering 97
Ultrasonic parking assist 97
Electronic Stability Control off ... 98
Electronic Stability Control and Traction Control system 98
Traction Control system off 98
Preheating 98
Diesel particle filter 98
Tyre pressure monitoring system 98
Engine oil pressure 99
Low fuel 99
Immobiliser 99
Reduced engine power 99
Exterior light 99
High beam 100
Adaptive forward lighting 100
Fog light 100
Rear fog light 100
Cruise control 100
Door open 100
Automatic locking 100
Information displays **101**
Driver Information Centre 101
Graphic-Info-Display, Colour-Info-Display 104
Vehicle messages **106**
Warning chimes 108
Battery voltage 109
Trip computer **109**
Vehicle personalisation **112**
OnStar® system **116**

Controls

Steering wheel adjustment

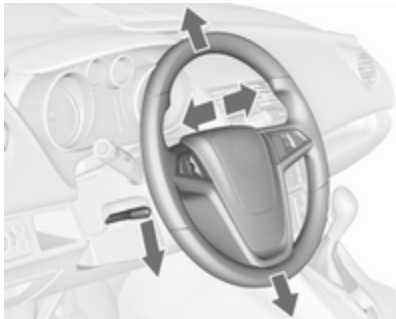

Unlock lever, adjust steering wheel, then engage lever and ensure it is fully locked.

Do not adjust steering wheel unless vehicle is stationary and steering wheel lock has been released.

Steering wheel controls

The Infotainment system, the cruise control and a connected mobile phone can be operated via the controls on the steering wheel.

Further information is available in the Infotainment manual.

Cruise control ⇨ 154.

Heated steering wheel

Activate heating by pressing ♨. Activation is indicated by the LED in the button.

The highlighted grip areas of the steering wheel are heated quicker and to a higher temperature than the other areas.

Heating is operational when the engine is running and during an Autostop.

Stop-start system ⇨ 142.

Horn

Press 🔈.

Windscreen wiper/washer

Windscreen wiper

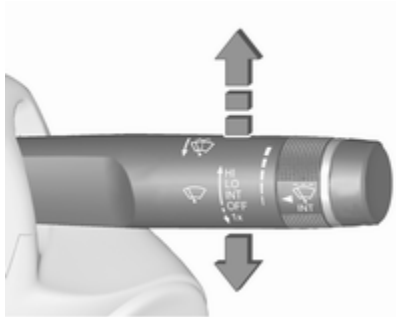

HI : fast
LO : slow
INT : interval wiping or automatic wiping with rain sensor
OFF : off

For a single wipe when the windscreen wiper is off, press the lever down to position **1x**.

Do not use if the windscreen is frozen.

Switch off in car washes.

Adjustable wiper interval

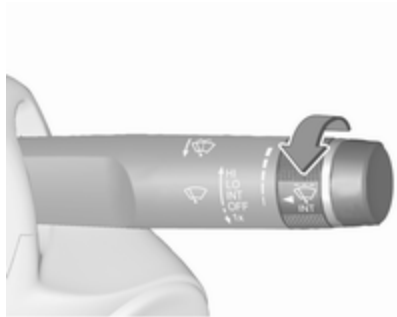

Wiper lever in position **INT**.

Turn the adjuster wheel to adjust the desired wipe interval:

short interval : turn adjuster wheel upwards
long interval : turn adjuster wheel downwards

Automatic wiping with rain sensor

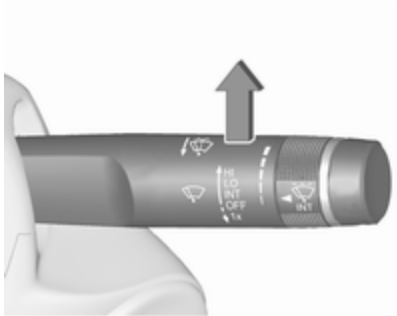

INT : automatic wiping with rain sensor

The rain sensor detects the amount of water on the windscreen and automatically regulates the frequency of the windscreen wiper.

Adjustable sensitivity of the rain sensor

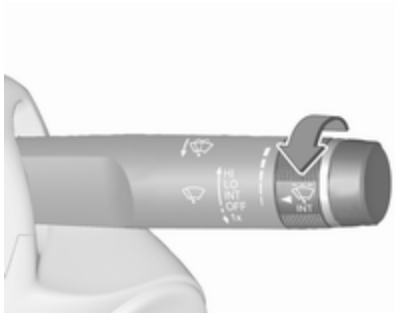

Turn the adjuster wheel to adjust the sensitivity:

low sensitivity : turn adjuster wheel downwards

high sensitivity : turn adjuster wheel upwards

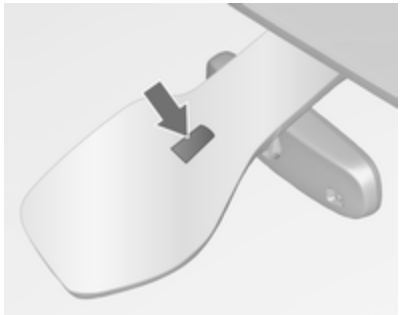

Keep the sensor free from dust, dirt and ice.

Windscreen washer

Pull lever. Washer fluid is sprayed onto the windscreen and the wiper wipes a few times.

Washer fluid ⇨ 176

Rear window wiper/washer

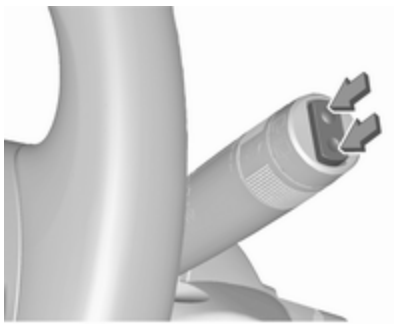

Press the rocker switch to activate the rear window wiper:

upper position : continuous operation
lower position : intermittent operation
middle position : off

Push lever. Washer fluid is sprayed onto the rear window and the wiper wipes a few times.

Do not use if the windscreen is frozen.

Switch off in car washes.

The rear window wiper comes on automatically when the windscreen wiper is operating and reverse gear is engaged.

Activation or deactivation of this function can be changed in the Settings menu in the Info-Display.

Washer fluid ⇨ 176

Vehicle personalisation ⇨ 112.

Outside temperature

A drop in temperature is indicated immediately and a rise in temperature after a time delay.

If outside temperature drops to 3 °C, a warning message is displayed in the Driver Information Centre with Uplevel-Display or Uplevel-Combi-Display.

⚠ Warning

The road surface may already be icy even though the display indicates a few degrees above 0 °C.

Clock

Date and time are shown in the Info-Display.

Time and date settings

CD 300/CD 400/CD 400plus

Press **CONFIG**. The menu **Settings** is displayed.

Select **Time & Date**.

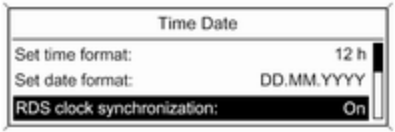

20136

Selectable setting options:

- **Set time**: Changes the time shown on the display.
- **Set date**: Changes the date shown on the display.
- **Set time format**: Changes indication of hours between **12 hours** and **24 hours**.
- **Set date format**: Changes indication of date between **MM/DD/YYYY** and **DD.MM.YYYY**.
- **Display digital clock**: Switches on/off indication of time on the display.
- **RDS clock synchronization**: The RDS signal of most VHF transmitters automatically sets the time. RDS time synchronisation can take a few minutes. Some transmitters do not send a correct time signal. In such cases, it is recommended to switch off automatic time synchronisation.

Vehicle personalisation ⇨ 112.

Time and date settings

CD 600/Navi 650/Navi 950

Press **Config** and then select the **Time and Date** menu item to display the respective submenu.

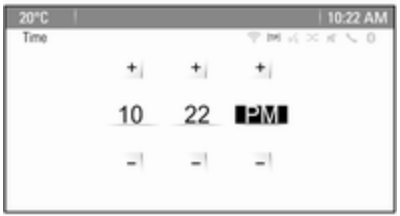

Note
If **RDS Auto Time Adjust** is activated, time and date are automatically set by the system.

See Infotainment manual for further information.

Set time
To adjust the time settings, select the **Set Time** menu item. Turn the multifunction knob to adjust the first setting.

Press the multifunction knob to confirm the input. The coloured background moves to the next setting.

Adjust all settings.

Set date
To adjust the time settings, select the **Set Date** menu item. Turn the multifunction knob to adjust the first setting.

Press the multifunction knob to confirm the input. The coloured background moves to the next setting.

Adjust all settings.

Time format
To choose the desired time format, select **12 hr / 24 hr Format**. Activate **12 Hour** or **24 Hour**.

Vehicle personalisation ⇨ 112.

Power outlets

A 12 volt power outlet is located in the front console.

A further 12 volt power outlet is located in the rear console.

Do not exceed the maximum power consumption of 120 watts.

With ignition off, the power outlets are deactivated. Additionally the power outlets are deactivated in the event of low vehicle battery voltage.

Electrical accessories that are connected must comply with the electromagnetic compatibility requirements laid down in DIN VDE 40 839.

Do not connect any current-delivering accessories, e.g. electrical charging devices or batteries.

Do not damage the outlet by using unsuitable plugs.

Stop-start system ⇨ 142.

Cigarette lighter

The cigarette lighter is located in the front console.

Press in cigarette lighter. It switches off automatically once the element is glowing. Pull out lighter.

Ashtrays

Caution
To be used only for ash and not for combustible rubbish.

The portable ashtray can be placed in the cupholders.

Warning lights, gauges and indicators

Instrument cluster

In some versions, the needles of the instruments briefly rotate to the end position when the ignition is switched on.

Speedometer

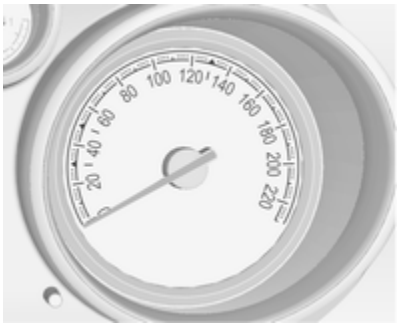

Indicates vehicle speed.

Odometer

The bottom line displays the recorded distance in km.

Trip odometer

The top line displays the recorded distance since the last reset.

To reset, press **SET/CLR** on the turn signal lever for a few seconds ⇨ 101.

On vehicles with reset knob, hold the reset knob depressed for a few seconds with the ignition on.

Tachometer

Displays the engine speed.

Drive in a low engine speed range for each gear as much as possible.

Caution
If the needle is in the red warning zone, the maximum permitted engine speed is exceeded. Engine at risk.

Fuel gauge

Displays the level in the fuel or gas tank depending on the operation mode.

The arrow indicates the vehicle side where the fuel filler flap is located.

Control indicator ● illuminates if the level in the tank is low. Refuel immediately if it flashes.

During liquid gas operation, the system automatically switches over to petrol operation when gas tanks are empty ⇨ 90.

Never run the fuel tank dry.

Because of the fuel remaining in the tank, the top-up quantity may be less than the specified tank capacity.

Fuel selector

Pressing **LPG** switches between petrol and liquid gas operation. The LED ▬ status shows the current operating mode.

▬ off	:	petrol operation
▬ flashes	:	checking conditions for fuel transition to liquid gas operation. Illuminates if conditions are fulfilled.
▬ illuminates	:	liquid gas operation
▬ flashes five times and extinguishes	:	liquid gas tank is empty or failure in liquid gas system. A message is displayed in the Driver Information Centre.

As soon as the liquid gas tanks are empty, petrol operation is automatically engaged until the ignition is switched off.

Fuel for liquid gas operation ⇨ 160.

Engine coolant temperature gauge

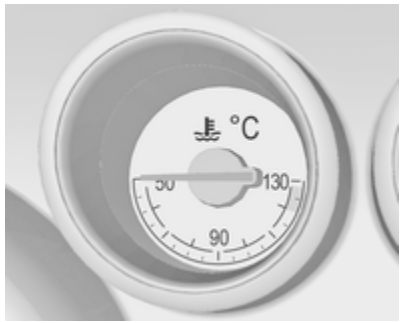

Displays the coolant temperature.

left area	:	engine operating temperature not yet reached
central area	:	normal operating temperature
right area	:	temperature too high

Caution

If engine coolant temperature is too high, stop vehicle, switch off engine. Danger to engine. Check coolant level.

Service display

The engine oil life system lets you know when to change the engine oil and filter. Based on driving conditions, the interval at which an engine oil and filter change will be indicated can vary considerably.

In the Uplevel-Display or Uplevel-Combi-Display the remaining oil life duration is displayed in the **Vehicle Information Menu**.

In the Midlevel-Display the remaining engine oil life duration is displayed by the control indicator. The ignition must be switched on, with the engine not running.

The menu and function can be selected via the buttons on the turn signal lever.

To display the remaining engine oil life duration:

Press **MENU** to select the **Vehicle Information Menu**.

Turn the adjuster wheel to select **Remaining Oil Life**.

The system must be reset every time the engine oil is changed to allow proper functionality. Seek the assistance of a workshop.

Press **SET/CLR** to reset. The ignition must be switched on, with the engine not running.

When the system has calculated that engine oil life has been diminished, **Change Engine Oil Soon** or a warning code appears in the Driver Information Centre. Have engine oil

and filter changed by a workshop within one week or 500 km (whichever occurs first).

Driver Information Centre ⇨ 101.

Service information ⇨ 220.

Control indicators

The control indicators described are not present in all vehicles. The description applies to all instrument versions.

Depending on the equipment the position of the control indicators may vary.

When the ignition is switched on, most control indicators will illuminate briefly as a functionality test.

The control indicator colours mean:

red	:	danger, important reminder
yellow	:	warning, information, fault
green	:	confirmation of activation
blue	:	confirmation of activation
white	:	confirmation of activation

Control indicators in the instrument cluster

Control indicators in the centre console

Overview

- Turn signal ⇨ 94
- Seat belt reminder ⇨ 95
- Airbag and belt tensioners ⇨ 95
- Airbag deactivation ⇨ 95
- Charging system ⇨ 96
- Malfunction indicator light ⇨ 96
- Service vehicle soon ⇨ 96
- Brake and clutch system ⇨ 96
- Operate pedal ⇨ 96
- Electric parking brake ⇨ 97
- Electric parking brake fault ⇨ 97
- Antilock brake system (ABS) ⇨ 97
- Upshift ⇨ 97
- Variable effort steering ⇨ 97
- Ultrasonic parking assist ⇨ 97
- Electronic Stability Control off ⇨ 98
- Electronic Stability Control and Traction Control system ⇨ 98
- Traction Control system off ⇨ 98
- Preheating ⇨ 98
- Diesel particle filter ⇨ 98
- Tyre pressure monitoring system ⇨ 98
- Engine oil pressure ⇨ 99
- Low fuel ⇨ 99
- Immobiliser ⇨ 99
- Reduced engine power ⇨ 99
- Exterior light ⇨ 99
- High beam ⇨ 100
- Adaptive forward lighting ⇨ 100
- Fog light ⇨ 100
- Rear fog light ⇨ 100
- Cruise control ⇨ 100
- Door open ⇨ 100
- Automatic locking ⇨ 100

Turn signal

⇦⇨ illuminates or flashes green.

Illuminates briefly

The parking lights are switched on.

Flashes

A turn signal or the hazard warning flashers are activated.

Rapid flashing: failure of a turn signal light or associated fuse, failure of turn signal light on trailer.

Bulb replacement ⇨ 180, Fuses ⇨ 189.

Turn signals ⇨ 124.

Seat belt reminder

Seat belt reminder on front seats

illuminates or flashes red.

Illuminates

After the ignition has been switched on until the seat belt has been fastened.

Flashes

After having started the engine for a maximum of 100 seconds until the seat belt has been fastened.

Fastening the seat belt ⇨ 46.

Seat belt status on rear seats

or in the Driver Information Centre flashes or illuminates.

Illuminates

After having started the engine for a minimum of 35 seconds until the seat belt has been fastened.

If an unfastened seat belt is fastened whilst driving.

Flashes

After starting off when the seat belt is unfastened.

Fastening the seat belt ⇨ 46.

Airbag and belt tensioners

illuminates red.

When the ignition is switched on, the control indicator illuminates for approx. 4 seconds. If it does not illuminate, does not go out after 4 seconds or illuminates whilst driving, there is a fault in the airbag system. Seek the assistance of a workshop. The airbags and belt pretensioners may fail to trigger in the event of an accident.

Deployment of the belt pretensioners or airbags is indicated by continuous illumination of .

⚠ Warning

Have the cause of the fault remedied immediately by a workshop.

Belt pretensioners, airbag system ⇨ 45, ⇨ 49.

Airbag deactivation

illuminates yellow.

Illuminates for approx. 60 seconds after the ignition is switched on. The front passenger airbag is activated.

illuminates yellow.

The front passenger airbag is deactivated ⇨ 53.

⚠ Danger

Risk of fatal injury for a child using a child restraint system together with activated front passenger airbag.

Risk of fatal injury for an adult person with deactivated front passenger airbag.

Charging system

illuminates red.

Illuminates when the ignition is switched on and extinguishes shortly after the engine starts.

Illuminates when the engine is running

Stop, switch off engine. Vehicle battery is not charging. Engine cooling may be interrupted. The brake servo unit may cease to be effective. Seek the assistance of a workshop.

Malfunction indicator light

illuminates or flashes yellow.

Illuminates when the ignition is switched on and extinguishes shortly after the engine starts.

Illuminates when the engine is running

Fault in the emission control system. The permitted emission limits may be exceeded. Seek the assistance of a workshop immediately.

Flashes when the engine is running

Fault that could lead to catalytic converter damage. Ease up on the accelerator until the flashing stops. Seek the assistance of a workshop immediately.

Service vehicle soon

illuminates yellow.

Additionally a warning message or a warning code is displayed.

The vehicle needs a service.

Seek the assistance of a workshop.

Vehicle messages ⇨ 106.

Brake and clutch system

Brake and clutch fluid level

illuminates red.

The brake and clutch fluid level is too low ⇨ 176.

⚠ Warning

Stop. Do not continue your journey. Consult a workshop.

Operate pedal

illuminates or flashes yellow.

Illuminates

Brake pedal needs to be depressed to release the electric parking brake ⇨ 151.

Clutch pedal needs to be depressed to start the engine in Autostop mode. Stop-start system ⇨ 142.

Flashes

Clutch pedal needs to be depressed for a main start of the engine ⇨ 17, ⇨ 141.

Electric parking brake

Ⓟ illuminates or flashes red.

Illuminates

Electrical parking brake is applied ⇨ 151.

Flashes

Electrical parking brake is not fully applied or released. Switch on ignition, depress brake pedal and attempt to reset the system by first releasing and then applying the electrical parking brake. If Ⓟ remains flashing, do not drive and seek the assistance of a workshop.

Electric parking brake fault

illuminates or flashes yellow.

Illuminates

Electrical parking brake is operating with degraded performance ⇨ 151.

Flashes

Electrical parking brake is in service mode. Stop vehicle, apply and release the electrical parking brake to reset.

⚠Warning
Have the cause of the fault remedied immediately by a workshop.

Antilock brake system (ABS)

(ABS) illuminates yellow.

Illuminates for a few seconds after the ignition is switched on. The system is ready for operation when the control indicator extinguishes.

If the control indicator does not go out after a few seconds, or if it illuminates while driving, there is a fault in the ABS. The brake system remains operational but without ABS regulation.

Antilock brake system ⇨ 150.

Upshift

SHIFT illuminates green when upshifting is recommended for fuel saving reasons.

On vehicles with Uplevel-Display or Uplevel-Combi-Display, SHIFT with the number of the recommended gear is shown in the bottom line of the Driver Information Centre.

Variable effort steering

! illuminates yellow.

Fault in variable effort steering system. This may lead to a higher or lower steering effort. Consult a workshop.

Stop-start system ⇨ 142.

Ultrasonic parking assist

P illuminates yellow.

Fault in system

or

Fault due to sensors that are dirty or covered by ice or snow

or

Interference due to external sources of ultrasound. Once the source of interference is removed, the system will operate normally.

Have the cause of the fault in the system remedied by a workshop.

Ultrasonic parking assist ⇨ 156.

Electronic Stability Control off

illuminates yellow.

The system is deactivated.

Electronic Stability Control and Traction Control system

illuminates or flashes yellow.

Illuminates

A fault in the system is present. Continued driving is possible. Driving stability, however, may deteriorate depending on road surface conditions.

Have the cause of the fault remedied by a workshop.

Flashes

The system is actively engaged. Engine output may be reduced and the vehicle may be braked automatically to a small degree.

Electronic Stability Control ⇨ 153, Traction Control system ⇨ 153.

Traction Control system off

illuminates yellow.

The system is deactivated.

Preheating

illuminates yellow.

Preheating of diesel engine is activated. Only activates when outside temperature is low.

Diesel particle filter

illuminates or flashes yellow.

The diesel particle filter requires cleaning.

Continue driving until extinguishes. If possible do not allow engine speed to drop below 2000 rpm.

Illuminates

The diesel particle filter is full. Start cleaning process as soon as possible.

Flashes

The maximum filling level of the filter is reached. Start cleaning process immediately to avoid damage to the engine.

Diesel particle filter ⇨ 145.

Stop-start system ⇨ 142.

Tyre pressure monitoring system

illuminates or flashes yellow.

Illuminates

Tyre pressure loss. Stop immediately and check tyre pressure.

Flashes

Fault in system or tyre without pressure sensor mounted (e.g. spare wheel). After 60-90 seconds the control indicator illuminates continuously. Consult a workshop.

Tyre pressure monitoring system ⇨ 198.

Engine oil pressure

illuminates red.

Illuminates when the ignition is switched on and extinguishes shortly after the engine starts.

Illuminates when the engine is running

Caution
Engine lubrication may be interrupted. This may result in damage to the engine and/or locking of the drive wheels.

1. Depress clutch.
2. Select neutral gear, set selector lever to **N**.
3. Move out of the flow of traffic as quickly as possible without impeding other vehicles.
4. Switch off ignition.

⚠ Warning
When the engine is off, considerably more force is needed to brake and steer. During an Autostop the brake servo unit will still be operational. Do not remove key until vehicle is stationary, otherwise the steering wheel lock could engage unexpectedly.

Check oil level before seeking assistance of a workshop ⇨ 174.

Low fuel

illuminates or flashes yellow.

Illuminates

Level in fuel tank is too low.

Additionally a warning message is displayed on vehicles with Uplevel-Display.

Flashes

Fuel used up. Refuel immediately. Never run the tank dry.

Additionally a warning message is displayed on vehicles with Midlevel- and Uplevel-Display.

Refuelling ⇨ 162.

Catalytic converter ⇨ 146.

Bleeding the diesel fuel system ⇨ 179.

Immobiliser

flashes yellow.

Fault in the immobiliser system. The engine cannot be started.

Reduced engine power

illuminates yellow.

The engine power is limited. Consult a workshop.

Exterior light

illuminates green.

The exterior lights are on ⇨ 120.

High beam

illuminates blue.

Illuminated when high beam is on and during headlight flash ⇨ 122.

Adaptive forward lighting

illuminates or flashes yellow.

Illuminates

Fault in system.

Seek the assistance of a workshop.

Flashes

System switched to symmetrical low beam.

Control indicator flashes for approx. 4 seconds after the ignition is switched on as a reminder that the system has been activated ⇨ 122.

Automatic light control ⇨ 121.

Fog light

illuminates green.

The front fog lights are on ⇨ 124.

Rear fog light

illuminates yellow.

The rear fog light is on ⇨ 125.

Cruise control

illuminates white or green.

Illuminates white

The system is on.

Illuminates green

A certain speed is stored.

Cruise control ⇨ 154.

Door open

illuminates red.

A door or the tailgate is open.

Automatic locking

! illuminates amber.

Fault in the automatic locking system.

The rear doors are possibly not secured against opening.

⚠ Warning

Stop your journey immediately! Follow the instructions as described in paragraph "Fault in the automatic locking system" before continuing your journey ⇨ 25.

Consult a workshop.

Information displays

Driver Information Centre

The Driver Information Centre is located in the instrument cluster between speedometer and tachometer. It is available as Midlevel-Display, Uplevel-Display or Uplevel-Combi-Display.

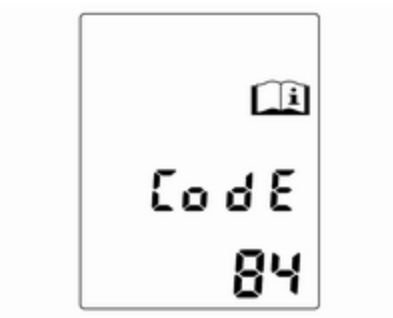

Midlevel-Display indicates:

- overall odometer
- trip odometer
- some control indicators
- vehicle information
- trip/fuel information
- vehicle messages, displayed as code numbers ⇨ 106

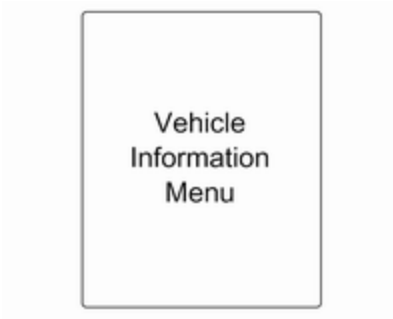

In the Uplevel-Display the following main menus can be selected by pressing **MENU** on the turn signal lever:

- **Vehicle Information Menu**
- **Trip/Fuel Information Menu**

In the Uplevel-Combi-Display, menu pages can be selected by pressing **MENU** on the turn signal lever; Menu symbols are indicated in the top line of the display:

- **Vehicle Information Menu**
- **Trip/Fuel Information Menu**

Some of the displayed functions differ when the vehicle is being driven or at a standstill. Some functions are only available when the vehicle is being driven.

Vehicle personalisation ⇨ 112, Memorised settings ⇨ 22.

Selecting menus and functions

The menus and functions can be selected via the buttons on the turn signal lever.

Press **MENU** to switch between the menus or to return from a submenu to the next higher menu level.

Turn the adjuster wheel to highlight a menu option or to set a numeric value.

Press **SET/CLR** to select a function or to confirm a message.

Vehicle Information Menu

Press **MENU** to select the **Vehicle Information Menu**, or on Uplevel-Combi-Display select 🚗.

Turn the adjuster wheel to select a submenu. Press **SET/CLR** to confirm.

Follow the instructions given in the submenus.

Possible submenus can be, depending on the version:

- **Unit**: Displayed units can be changed.

  On vehicles with Midlevel-Display following settings can be selected:

  - **Unit1**: Great Britain
  - **Unit2**: United States
  - **Unit3**: Europe
- **Tyre Pressure System**: Checks tyre pressure of all wheels during driving ⇨ 198.
- **Tyre Load**: Select tyre pressure category according to the actually inflated tyre pressure ⇨ 198.

- **Remaining Oil Life**: Indicates when to change the engine oil and filter ⇨ 91.

- **Speed Warning**: If exceeding the preset speed, a warning chime will be activated.
- **Language**: Displayed language can be changed if the vehicle is not equipped with a radio.

Selection and indication can be different between Midlevel-, Uplevel-, and Uplevel-Combi-Display.

Trip/Fuel Information Menu

Press **MENU** to select the **Trip/Fuel Information Menu**, or select ⁄⁝\ on Uplevel-Combi-Display.

Turn the adjuster wheel to select a submenu. Press **SET/CLR** to confirm.

- trip odometer 1
- trip odometer 2
- digital speed

Trip odometer 2 and digital speed are only available on vehicles with Uplevel-Display or Uplevel-Combi-Display.

Reset trip odometer by pressing **SET/CLR** on the turn signal lever for a few seconds or by pressing the reset knob between speedometer and Driver Information Centre with the ignition on.

On vehicles with trip computer more submenus are available.

Selection and indication can be different between Midlevel-, Uplevel-, and Uplevel-Combi-Display.

Trip/Fuel Information Menu, Trip Computer ⇨ 109.

Graphic-Info-Display, Colour-Info-Display

Depending on the vehicle configuration the vehicle has a

- **Graphic-Info-Display**

  or

- **Colour-Info-Display**

The Info-Display is located in the instrument panel above the Infotainment system.

Graphic-Info-Display

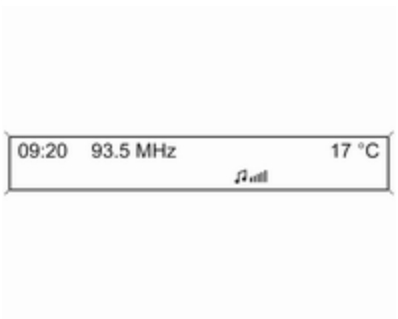

Depending on the Infotainment system, the Graphic-Info-Display is available in two versions.

20153

Graphic-Info-Display indicates:

- time ⇨ 86
- outside temperature ⇨ 85
- date ⇨ 86
- electronic climate control settings ⇨ 132
- Infotainment system, see description for Infotainment system in the Infotainment manual
- settings for vehicle personalisation ⇨ 112

Colour-Info-Display

The Colour-Info-Display indicates in colour:

- time ⇨ 86
- outside temperature ⇨ 85
- date ⇨ 86
- electronic climate control settings ⇨ 132
- rear view camera ⇨ 158
- Infotainment system, see description for Infotainment system in the Infotainment manual

- navigation, see description for Infotainment system in the Infotainment manual
- system settings
- vehicle messages ⇨ 106
- settings for vehicle personalisation ⇨ 112

The type of information and how it is displayed depends on the equipment of the vehicle and the settings made.

Selecting menus and settings

Menus and settings are accessed via the display.

Selections are made via:

- menus
- function buttons and multifunction knob of the Infotainment system

Selecting with the Infotainment system

Select a function via the Infotainment system buttons. The menu of the selected function is displayed.

The multifunction knob is used to select an item and to confirm.

Multifunction knob

The multifunction knob is the central control element for the menus:

Turn

- to mark a menu option
- to set a numeric value or to display a menu option

Press (the outer ring)

- to select or activate the marked option
- to confirm a set value
- to switch a system function on/off

BACK

Press **BACK** to:

- exit a menu without changing settings
- return from a submenu to a higher menu level
- delete the last character in a character sequence

Press and hold **BACK** for a few seconds to delete the entire entry.

Vehicle personalisation ⇨ 112, Memorised settings ⇨ 22.

Vehicle messages

Messages are indicated mainly in the Driver Information Centre, in some cases together with a warning and signal buzzer.

Press **SET/CLR**, **MENU** or turn the adjuster wheel to confirm a message.

Vehicle messages on the Midlevel-Display

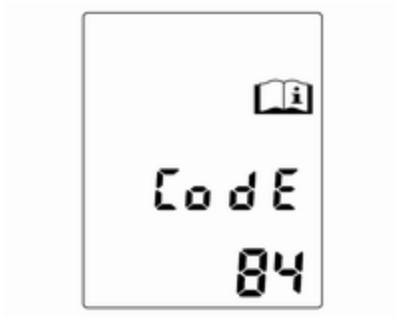

The vehicle messages are displayed as code numbers.

No.	Vehicle message
2	No radio remote control detected, depress clutch pedal for a restart
3	Engine coolant level low
4	Air conditioning off
5	Steering wheel is locked
6	Depress brake pedal to release electrical parking brake
7	Turn steering wheel, switch ignition off and then on
9	Turn steering wheel, start engine again
12	Vehicle overloaded
13	Compressor overheated
15	Centre high-mounted brake light failure
16	Brake light failure
17	Headlight levelling malfunction
18	Left low beam failure
19	Rear fog light failure
20	Right low beam failure
21	Left sidelight failure
22	Right sidelight failure
23	Reversing light failure
24	Number plate light failure

No.	Vehicle message
25	Left front turn signal failure
26	Left rear turn signal failure
27	Right front turn signal failure
28	Right rear turn signal failure
29	Check trailer brake light
30	Check trailer reversing light
31	Check left trailer turn signal
32	Check right trailer turn signal
33	Check trailer rear fog light
34	Check trailer rear light
35	Replace battery in radio remote control
48	Clean side blind zone alert system
53	Tighten gas cap
54	Water in diesel fuel filter
55	Diesel particle filter is full ⇨ 145
56	Tyre pressure imbalance on front axle
57	Tyre pressure imbalance on rear axle
58	Tyres without TPMS sensors detected
59	Open and then close driver window
60	Open and then close front passenger window
61	Open and then close rear left window
62	Open and then close rear right window
65	Theft attempted
66	Service theft alarm system
67	Service steering wheel lock
68	Service power steering
69	Service suspension system
70	Service level control system
71	Service rear axle
74	Service AFL
75	Service air conditioning
76	Service side blind zone alert system
79	Top up engine oil
81	Service transmission
82	Change engine oil soon
83	Service adaptive cruise control
84	Engine power is reduced
89	Service vehicle soon
94	Shift to park before exiting
95	Service airbag
128	Bonnet open
134	Park assist fault, clean bumper
136	Service parking assist

No.	Vehicle message
174	Low vehicle battery
258	Park assist off

Vehicle messages on the Uplevel-Display or Uplevel-Combi-Display

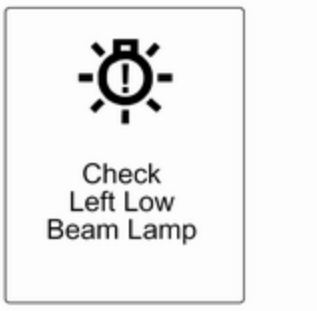

The vehicle messages are displayed as text. Follow the instructions given in the messages.

The system displays messages regarding the following topics:

- fluid levels
- anti-theft alarm system
- brakes
- drive systems
- ride control systems
- cruise control
- object detection systems
- lighting, bulb replacement
- wiper/washer system
- doors, windows
- radio remote control
- seat belts
- airbag systems
- engine and transmission
- tyre pressure
- diesel particle filter

Vehicle messages on the Colour-Info-Display

Some important messages appear additionally in the Colour-Info-Display. Press the multifunction knob to confirm a message. Some messages only pop-up for a few seconds.

Warning chimes

Only one warning chime will sound at a time.

The warning chime regarding unfastened seat belts has priority over any other warning chime.

When starting the engine or whilst driving

- If seat belt is not fastened.
- If a door or the tailgate is not fully closed when starting-off.
- If a certain speed is exceeded with parking brake applied.
- If a programmed speed is exceeded.
- If a warning message or a warning code appears in the Driver Information Centre.
- If the parking assist detects an object.
- If reverse gear is engaged and the rear end carrier is extended.

- If a fault in the automatic locking system is detected.
- If the diesel particle filter has reached the maximum filling level.

When the vehicle is parked and/or the driver's door is opened

- With exterior lights on.

During an Autostop

- If the driver's door is opened.

Battery voltage

When the vehicle battery voltage is running low, a warning message or warning code 174 will appear in the Driver Information Centre.

1. Switch off immediately any electrical consumers which are not required for a safe ride, e.g. seat heating, heated rear window or other main consumers.
2. Charge the vehicle battery by driving continuously for a while or by using a charging device.

The warning message or warning code will disappear after the engine has been started twice consecutively without a voltage drop.

If the vehicle battery cannot be recharged, have the cause of the fault remedied by a workshop.

Trip computer

The menus and functions can be selected via the buttons on the turn signal lever ⇨ 101.

Press **MENU** to select the **Trip/Fuel Information Menu**, or select ⁄⁝\ on the Uplevel-Combi-Display.

Trip/Fuel Information Menu on Uplevel-Display

Turn the adjuster wheel to select one of the submenus:

- trip odometer 1
- trip odometer 2
- range
- average consumption
- instantaneous consumption
- average speed
- digital speed

Trip/Fuel Information Menu on Uplevel-Combi-Display

Turn the adjuster wheel to select a page:

Page 1:

- trip odometer 1
- average consumption 1
- average speed 1

Page 2:

- trip odometer 2
- average consumption 2
- average speed 2

Page 3:

- digital speed
- range
- instantaneous consumption

Trip computer 1 and 2

The information of two trip computers can be reset separately for odometer, average consumption and average speed by pressing **SET/CLR**, making it possible to display different trip information for different drivers.

Trip odometer

Trip odometer displays the recorded distance since a certain reset.

Trip odometer counts up to a distance of 2,000 km and then restarts at 0.

Reset trip odometer by pressing **SET/CLR** on the turn signal lever for a few seconds or, on vehicles with reset knob, by pressing the reset knob near the speedometer separately for selected page 1 or 2.

Fuel range

Range is calculated from current fuel tank level and current consumption. The display shows average values.

After refuelling, the range is updated automatically after a brief delay.

When the fuel level in the tank is low, a message appears in the display.

When the tank has to be refuelled immediately, a warning message is displayed.

Additionally the control indicator ⬬ in the fuel gauge illuminates or flashes ⇨ 99.

Fuel range LPG version

Display of approximate fuel range available with the remaining fuel in each respective fuel tank of gasoline and LPG fuel, along with a total range of both fuel types together. Switch between the mode by pressing **SET/CLR**.

Average consumption

Display of average consumption. The measurement can be reset at any time and starts with a default value.

To reset, press **SET/CLR** for a few seconds separately for selected page 1 or 2.

On vehicles with LPG engines: Average consumption is indicated for the currently selected mode; LPG or Gasoline.

Instantaneous consumption

Displays the instantaneous consumption.

On vehicles with LPG engines: Instantaneous consumption is indicated for the currently selected mode; LPG or Gasoline.

Average speed

Display of average speed. The measurement can be reset at any time.

To reset, press **SET/CLR** for a few seconds separately for selected page 1 or 2.

Digital speed

Digital display of the instantaneous speed.

Vehicle personalisation

The vehicle's behaviour can be personalised by changing the settings in the Info-Display.

Some of the personal settings for different drivers can be memorised individually for each vehicle key. Memorised settings ⇨ 22.

Depending on vehicle equipment and country-specific regulations some of the functions described below might not be available.

Some functions are only displayed or active when the engine is running.

Personal settings in the Graphic-Info-Display

CD 300/CD 400/CD 400plus

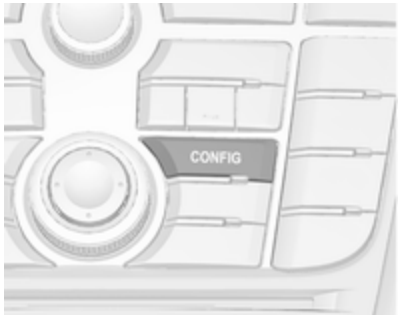

Press **CONFIG**. The menu **Settings** is displayed.

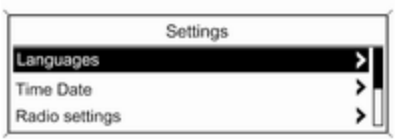

The following settings can be selected by turning and pressing the multifunction knob:

- **Languages**
- **Time Date**
- **Radio settings**
- **Phone settings**
- **Vehicle settings**

In the corresponding submenus the following settings can be changed:

Languages
Selection of the desired language.

Time Date
See Clock ⇨ 86.

Radio settings
See description for Infotainment system in the Infotainment manual.

Phone settings
See description for Infotainment system in the Infotainment manual.

Vehicle settings

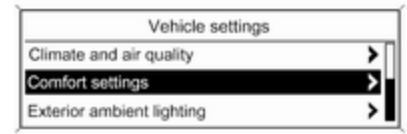

- **Climate and air quality**

  Auto fan speed: Modifies the level of the cabin airflow of the climate control in automatic mode.

  Climate control mode: Controls the state of the cooling compressor when the vehicle is started. Last setting (recommended) or at vehicle start either always ON or always OFF.

  Auto rear demist: Activates automatically rear heated window.

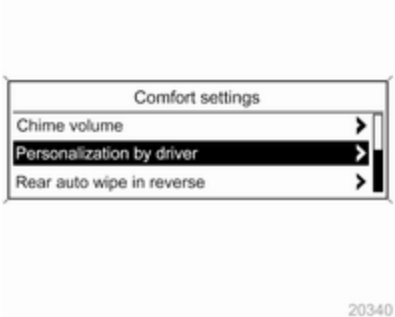

- **Comfort settings**

  Chime volume: Changes the volume of warning chimes.

  Personalization by driver: Activates or deactivates the personalisation function.

  Rear auto wipe in reverse: Activates or deactivates automatic switching on of the rear window wiper when reverse gear is engaged.

- **Park assist / Collision detection**

  Park assist: Activates or deactivates the ultrasonic parking assist.

- **Exterior ambient lighting**

  Duration upon exit of vehicle: Activates or deactivates and changes the duration of exit lighting.

  Exterior lighting by unlocking: Activates or deactivates the welcome lighting.

- **Remote locking, unlocking, starting**

  Remote door unlock: Changes the configuration to unlock only the driver's door or the whole vehicle whilst unlocking.

- **Restore factory settings**

  Restore factory settings: Resets all settings to the default settings.

Settings in the Colour-Info-Display

CD 600/Navi 650/Navi 950

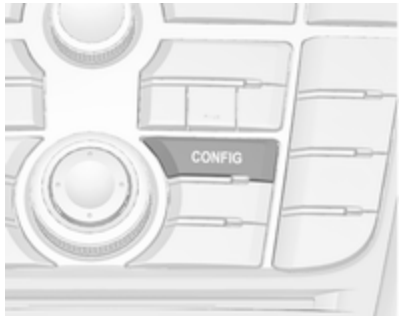

Press **CONFIG** on the Infotainment system faceplate to enter the **Configuration Settings** menu.

Turn the multifunction knob to scroll upwards or downwards in the list. Press the multifunction knob (Navi 950 / Navi 650: press the outer ring) to select a menu item.

- Languages
- Time and Date
- Radio Settings
- Phone Settings
- Navigation Settings
- Display Settings
- Vehicle Settings

In the corresponding submenus the following settings can be changed:

Languages
Selection of the desired language.

Time and Date
See Infotainment manual for further information.

Radio Settings
See Infotainment manual for further information.

Phone Settings
See Infotainment manual for further information.

Navigation Settings
See Infotainment manual for further information.

Display Settings
- **Home Page Menu**:

  See Infotainment manual for further information.
- **Rear Camera Options**:

  Press to adjust the rear camera options ⇨ 158.
- **Display Off**:

  See Infotainment manual for further information.
- **Map Settings**:

  See Infotainment manual for further information.

Vehicle Settings
- **Climate and Air Quality**

  Auto Fan Speed: Modifies the fan regulation. Changed setting will be active after switching the ignition off and on again.

  Air Conditioning Mode: Activates or deactivates cooling when switching on the ignition or uses the last chosen setting.

  Auto Demist: Activates or deactivates auto demist.

  Auto Rear Demist: Activates automatically the rear heated window.
- **Comfort and Convenience**

  Chime Volume: Changes the volume of warning chimes.

  Personalisation by Driver: Activates or deactivates the personalisation function.

  Auto Reverse Gear Wiper: Activates or deactivates automatically switching on of the rear window wiper when reverse gear is engaged.

- **Collision Detection Systems**

  Park Assist: Activates or deactivates the ultrasonic sensors.
- **Lighting**

  Vehicle Locator Lights: Activates or deactivates the entry lighting.

  Exit Lighting: Activates or deactivates and changes the duration of exit lighting.
- **Remote Lock/Unlock/Start**

  Remote Door Unlock: Changes the configuration to unlock only the driver's door or the whole vehicle whilst unlocking.
- **Return to Factory Settings?**: Resets all settings to the default settings.

OnStar® system

OnStar is a personal connectivity and mobility assistant with integrated Wi-Fi hotspot. The OnStar service is available 24 hours a day, seven days a week.

Note
OnStar is not available for all markets. For further information, contact your workshop.

Note
In order to be available and operational, OnStar needs a valid OnStar subscription, functioning vehicle electrics, mobile service and GPS satellite link.

To activate the OnStar services and set up an account, press On and speak with an OnStar advisor.

Depending on the equipment of the vehicle, the following services are available:

- OnStar emergency services and support in the case of a vehicle breakdown
- Wi-Fi hotspot
- OnStar smartphone application
- OnStar remote services, e.g. location of the vehicle, activation of horn and lights
- Stolen vehicle assistance
- Vehicle health check
- Destination download

Note
All functions requiring data connection to the vehicle are no longer available if the vehicle ignition has not been turned on for ten days.

OnStar buttons

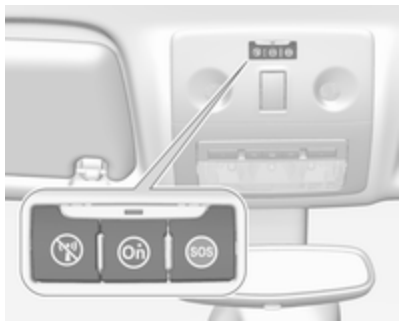

Privacy button

Press and hold ⊘ until an audio message is heard to activate or deactivate the transmission of the vehicle location.

Press ⊘ to answer a call or to end a call to an OnStar advisor.

Press ⊘ to access the Wi-Fi settings.

OnStar button

Press ⓞ to establish a connection to an OnStar advisor.

SOS button

Press SOS to establish a priority emergency connection to a specially trained emergency advisor.

Status light

Green: The system is ready.

Green flashing: The system is on a call.

Red: A problem arose.

Off: System is off.

Red / green flashing for a short period of time: Transmission of the vehicle location has been deactivated.

OnStar services

OnStar emergency services

OnStar emergency provides a service with specially trained emergency advisors for contact, assistance and information during an emergency.

In the case of an emergency situation including vehicle breakdown, a flat tyre or empty fuel tank, press SOS and talk to the advisor. The advisor then contacts emergency or assistance service providers and directs them to your vehicle.

In the case of an accident with activation of airbags or belt tensioners, an automatic emergency call is established. The advisor is immediately connected to your vehicle to see whether help is needed.

OnStar Wi-Fi hotspot

The Wi-Fi hotspot of the vehicle provides internet connectivity through the 4G/LTE mobile network.

Note
The Wi-Fi hotspot functionality is not available for all markets.

Up to seven devices may be connected.

To connect a mobile device with the OnStar Wi-Fi hotspot:

1. Press ⊘ and then select Wi-Fi settings on the Info-Display. The settings displayed include the Wi-Fi hotspot name (SSID), password and connection type.
2. Start a Wi-Fi network search on your mobile device.
3. Select your vehicle hotspot (SSID) when listed.
4. When prompted, enter the password on your mobile device.

Note
To change the SSID or password, select ⓞ and talk to an OnStar advisor or logon to your account.

To switch off the Wi-Fi hotspot functionality, press ⓞ to call an OnStar advisor.

Smartphone app

With the myOpel smartphone app, some vehicle functions can be operated via a smartphone.

The following functions are available:

- Honk horn or flash lights.
- Check fuel level and engine oil life.
- Send navigation destination to the vehicle, if equipped with a built-in navigation system.
- Locate vehicle on a map.
- Manage Wi-Fi settings.

To operate these functions, download the app from the respective app store.

Remote service

If desired, use any phone to call an OnStar advisor, who can remotely operate specific vehicle functions. Find the respective OnStar phone number on our country-specific website.

The following functions are available:

- Provide information on the vehicle location.
- Honk horn or flash lights.

Stolen vehicle assistance

If a vehicle is stolen, the OnStar stolen vehicle assistance service can provide support in locating and recovering the vehicle.

When the anti-theft alarm system is triggered, a notification is sent to OnStar. You are then informed about this event by text message or email.

If required, report the theft to the authorities and request OnStar stolen vehicle assistance. Use any phone to call an OnStar advisor. Find the respective OnStar phone number on our country-specific website.

On-demand diagnostics

At any time e.g. if the vehicle displays a service message, press ⓞⓝ to contact an OnStar advisor and ask to complete a real-time diagnostic check to directly determine the issue. Depending on the results, the advisor will provide further support.

Monthly vehicle diagnostics

The vehicle automatically transmits diagnostic data to OnStar which sends a monthly email report to you and your preferred workshop.

Note

The workshop notification function can be disabled in your account.

The report contains the status of key operating systems of the vehicle like engine, transmission, airbags, antilock brakes, and other major systems. It also provides information on possible maintenance items.

To look at the information in greater detail, select the link within the email and log into your account.

Destination download

A desired destination can be directly downloaded to the navigation system.

Press ⓞⓝ to call an OnStar advisor and describe the destination or point of interest.

The OnStar advisor can look up any address or point of interest and directly download the destination to the built-in navigation system.

OnStar settings

OnStar PIN

To have full access to all OnStar services, a four-digit PIN is required. The PIN has to be personalised when first talking to an OnStar advisor.

To change the PIN, press ⓞⓝ to call an OnStar advisor.

Account data

An OnStar subscriber has an account, where all the data is stored. To request a change of the account information, press ⓞⓝ and talk to an OnStar advisor or logon to your account.

If the OnStar service is used on another vehicle, press ⓞⓝ and request that the account be transferred to the new vehicle.

Note
In any case, if the vehicle is disposed of, sold or otherwise transferred, immediately inform OnStar about the changes and terminate the OnStar service on this vehicle.

Vehicle location

The vehicle location is transmitted to OnStar when service is requested or triggered. A message on the Info-Display informs about this transmission.

To activate or deactivate the transmission of the vehicle location, press and hold ⓣ until an audio message is heard.

The deactivation is indicated by the status light flashing red and green for a short period of time and each time the vehicle is started.

Note
If the transmission of the vehicle location is deactivated, some services are no longer available.

Note
The vehicle location always remains accessible to OnStar in the case of an emergency.

Find the privacy policy in your account.

Software updates

OnStar may remotely carry out software updates without further notice or consent. These updates are to enhance or maintain safety and security or the operation of the vehicle.

These updates may concern privacy issues. Find the privacy policy in your account.

Lighting

Exterior lighting **120**
Light switch 120
Automatic light control 121
High beam 122
Headlight flash 122
Headlight range adjustment 122
Headlights when driving abroad 122
Daytime running lights 123
Adaptive forward lighting 123
Hazard warning flashers 124
Turn and lane-change signals . 124
Front fog lights 124
Rear fog lights 125
Parking lights 125
Reversing lights 125
Misted light covers 125
Interior lighting **126**
Instrument panel illumination control 126
Interior lights 126
Reading lights 127
Sunvisor lights 127
Lighting features **127**
Centre console lighting 127
Entry lighting 127
Exit lighting 127
Battery discharge protection 128

Exterior lighting

Light switch

Turn light switch:

0 : lights off
⇛ : sidelights
≣D : low beam

Control indicator ⇛ ⇨ 99.

Light switch with Automatic light control

Turn light switch:

AUTO : automatic light control: Exterior lighting is switched on and off automatically depending on external lighting conditions

⏻ : activation or deactivation of the automatic light control. Switch turns back to AUTO

≡D : sidelights

≡D : low beam

In the Driver Information Centre with Uplevel-Display or Uplevel-Combi-Display, the current status of the automatic light control is displayed.

When switching on the ignition, automatic light control is active.

When low beam is on, ≡D illuminates. Control indicator ≡D ⇨ 99.

Tail lights

Tail lights are illuminated together with low beam and sidelights.

Automatic light control

When the automatic light control function is switched on and the engine is running, the system switches between daytime running light and low beam depending on the lighting conditions.

Daytime running light ⇨ 123.

Automatic low beam activation

During poor lighting conditions the low beam is switched on.

Tunnel detection

When a tunnel is entered the low beam is switched on.

Adaptive forward lighting ⇨ 123.

High beam

To switch from low to high beam, push lever.

To switch to low beam, push lever again or pull.

Headlight flash

To activate the headlight flash, pull lever.

Headlight range adjustment

Manual headlight range adjustment

To adapt headlight range to the vehicle load to prevent dazzling: turn thumb wheel to required position.

0 : front seats occupied
1 : all seats occupied
2 : all seats occupied and load compartment laden
3 : driver's seat occupied and load compartment laden

Headlights when driving abroad

The asymmetrical headlight beam extends visibility at the edge of the road on the front passenger side.

However, when driving in countries where traffic drives on the opposite side of the road, adjust the headlights to prevent dazzling of oncoming traffic.

Vehicles without Adaptive Forward Lighting

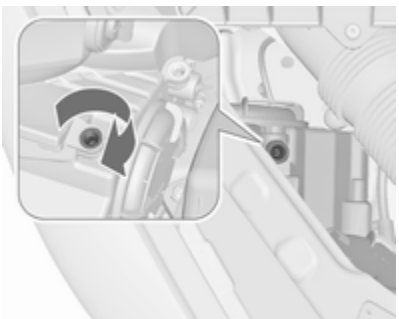

Turn the adjusting screws clockwise using the screwdriver for half a turn.

The adjusting screws are located at the headlights above the low beam caps ⇨ 180.

For deactivation, turn the adjusting screws anticlockwise for half a turn.

Caution
Have the adjustment of the headlights checked after deactivation. We recommend consulting a workshop.

Vehicles with Adaptive Forward Lighting

1. Key in ignition switch.
2. Pull turn signal lever and hold (headlight flash).
3. Switch on ignition.
4. After approx. five seconds the control indicator starts flashing and an acoustic signal sounds.

Control indicator ⇨ 100.

Every time the ignition is switched on, control indicator flashes as a reminder for approx. four seconds.

For deactivation, operate the same procedure as described above. Control indicator will not flash when function is deactivated.

Daytime running lights

Daytime running light increases visibility of the vehicle during daylight.

They are switched on automatically when ignition is on.

Adaptive forward lighting

Adaptive forward lighting ensures better illumination of bends, crossings and narrow bends.

Dynamic curve lighting

The light beam pivots based on steering wheel angle and speed, improving lighting in curves.

Corner lighting

On tight bends or when turning off, depending on the steering angle or the indicator light signal, an additional left or right reflector is switched on which illuminates the road in the direction of travel. It is activated up to a speed of 40 km/h.

Reversing function

If the low beam is on and reverse gear is engaged, both corner lights are switched on. They remain illuminated for 20 seconds after disengaging reverse gear or until driving faster than 17 km/h in a forward gear.

Hazard warning flashers

Operated by pressing ⚠.

In the event of an accident with airbag deployment the hazard warning flashers are activated automatically.

Turn and lane-change signals

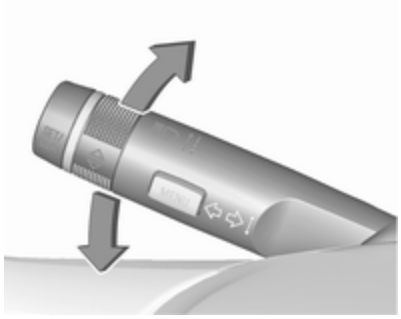

lever up : right turn signal
lever down : left turn signal

If the lever is moved past the resistance point, the turn signal is switched on constantly. When the steering wheel moves back, the turn signal is automatically deactivated.

For three flashes, e.g. when changing lanes, press the lever until resistance is felt and then release.

With a trailer connected, turn signal flashes six times and tone frequency changes when pressing the lever until resistance is felt and then releasing.

Move the lever to the resistance point and hold for longer indication.

Switch the turn signal off manually by moving the lever to its original position.

Front fog lights

Operated by pressing ≠D.

Light switch in position **AUTO**: switching on front fog lights will switch the low beam on automatically.

Rear fog lights

Operated by pressing ⊄.

Light switch in position **AUTO**: switching on rear fog light will switch the low beam on automatically.

Light switch in position ≡⊄: rear fog light can only be switched on with front fog lights.

The vehicle rear fog light is deactivated when towing.

Parking lights

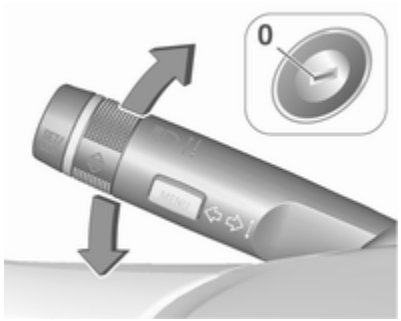

When the vehicle is parked, the parking lights on one side can be activated:

1. Switch off ignition.
2. Move turn signal lever all the way up (right parking lights) or down (left parking lights).

Confirmed by a signal and the corresponding turn signal control indicator.

Reversing lights

The reversing light comes on when the ignition is on and reverse gear is selected.

Misted light covers

The inside of the light housing may mist up briefly in poor, wet and cold weather conditions, in heavy rain or after washing. The mist disappears quickly by itself; to help switch on the exterior lights.

Interior lighting

Instrument panel illumination control

Brightness of the following lights can be adjusted when the exterior lights are on:

- instrument panel illumination
- Info-Display
- illuminated switches and operation elements

Turn thumb wheel until the required brightness is obtained.

On vehicles with light sensor the brightness can only be adjusted when the exterior lights are on and the light sensor detects night conditions.

Interior lights

During entry and exit of the vehicle, the front and rear courtesy lights automatically switch on and then off after a delay.

Note
In the event of an accident with airbag deployment the courtesy lights are turned on automatically.

Front courtesy light

Operate rocker switch:

: automatic switching on and off
press : on
press : off

Rear courtesy lights

Illuminate in conjunction with the front courtesy light depending on rocker switch position.

Reading lights

Operated by pressing and in front and rear courtesy lights.

Sunvisor lights

Illuminate when the cover is opened.

Lighting features

Centre console lighting

Spotlight incorporated in the interior lighting comes on when the low beam is switched on.

Entry lighting

Welcome lighting

The following lights are switched on for a short time by unlocking the vehicle with the radio remote control:

- exterior lights
- instrument panel light
- interior lights

Some functions work only in the dark and facilitates locating the vehicle.

The lighting switches off immediately when the ignition key is turned to position **1** ⇨ 140.

Activation or deactivation of this function can be changed in the Settings menu in the Info-Display. Vehicle personalisation ⇨ 112.

The settings can be saved for the key being used ⇨ 22.

The following lights will additionally switch on when the driver's door is opened:

- all switches
- Driver Information Centre

Exit lighting

The following lights illuminate if the key is removed from the ignition switch:

- interior lights
- instrument panel light (only when it is dark)

They will switch off automatically after a delay. Both lights will be activated again if the driver's door is opened.

Path lighting

The exterior lights illuminate the surrounding area for an adjustable time after leaving the vehicle.

Activating

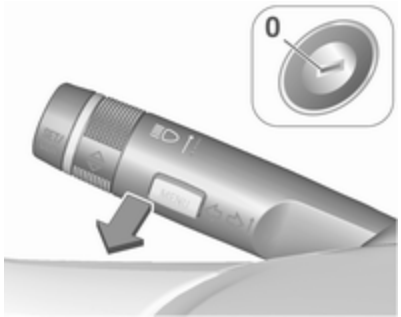

1. Switch off ignition.
2. Remove ignition key.
3. Open driver's door.
4. Pull turn signal lever.
5. Close driver's door.

If the driver's door is not closed the lights switch off after 2 minutes.

Exit lighting is switched off immediately if the turn signal lever is pulled while the driver's door is open.

Activation, deactivation and duration of this function can be changed in the Settings menu in the Info-Display. Vehicle personalisation ⇨ 112.

The settings can be saved for the key being used ⇨ 22.

Battery discharge protection

Switching off electric lights

To prevent discharge of the vehicle battery when the ignition is switched off, some interior lights are switched off automatically after some time.

Climate control

Climate control systems **129**
Heating and ventilation system 129
Air conditioning system 130
Electronic climate control system 132
Auxiliary heater 136
Air vents **136**
Adjustable air vents 136
Fixed air vents 137
Maintenance **137**
Air intake 137
Pollen filter 137
Air conditioning regular operation 137
Service 137

Climate control systems

Heating and ventilation system

Controls for:

- temperature
- air distribution
- fan speed
- demisting and defrosting

Heated rear window ⇨ 33.

Temperature

red : warm
blue : cold

Heating will not be fully effective until the engine has reached normal operating temperature.

Air distribution

: to windscreen and front door windows
: to head area via adjustable air vents
: to foot well

All combinations are possible.

Fan speed

Adjust the air flow by switching the fan to the desired speed.

Demisting and defrosting

- Press : fan automatically switches to higher speed, the air distribution is directed towards the windscreen.
- Set temperature control to warmest level.
- Switch on heated rear window .
- Open side air vents as required and direct them towards the door windows.

Note
If the settings for demisting and defrosting are selected, an Autostop will be inhibited.

If the settings for demisting and defrosting are selected while the engine is in an Autostop, the engine will restart automatically.

Stop-start system ⇨ 142.

Air conditioning system

In addition to the heating and ventilation system, the air conditioning system has controls for:

❄ : cooling
⟲ : air recirculation

Heated seats ⇨ 41, Heated steering wheel ⇨ 82.

Cooling ❄

Press ❄ to switch on cooling. Activation is indicated by the LED in the button. Cooling is only functional when the engine is running and climate control fan is switched on.

Press ❄ again to switch off cooling.

The air conditioning system cools and dehumidifies (dries) as soon as the outside temperature is slightly above the freezing point. Therefore condensation may form and drip from under the vehicle.

If no cooling or drying is required, switch off the cooling system for fuel saving reasons. Activated cooling might inhibit Autostops.

Air recirculation system ⟲

Press ⟲ to activate air recirculation mode. Activation is indicated by the LED in the button.

Press again to deactivate recirculation mode.

⚠Warning

The exchange of fresh air is reduced in air recirculation mode. In operation without cooling the air humidity increases, so the windows may mist up from inside. The quality of the passenger compartment air deteriorates, which may cause the vehicle occupants to feel drowsy.

In warm and very humid ambient air conditions, the windscreen might mist up from outside, when cold air is directed to it. If windscreen mists up from outside, activate windscreen wiper and deactivate .

Maximum cooling

Briefly open the windows so that hot air can disperse quickly.

- Switch on cooling .
- Switch on air recirculation system .
- Press air distribution switch .
- Set temperature control to coldest level.
- Set fan speed to highest level.
- Open all air vents.

Demisting and defrosting the windows

- Press : fan automatically switches to higher speed, the air distribution is directed towards the windscreen.
- Set temperature control to warmest level.
- Switch on heated rear window .
- Open side air vents as required and direct them towards the door windows.

Note

If is pressed while the engine is running, an Autostop will be inhibited until is pressed again.

If is pressed while the engine is in an Autostop, the engine will restart automatically.

Stop-start system ⇨ 142.

Electronic climate control system

The dual zone climate control allows different climatisation temperatures for driver and front passenger side.

In Automatic mode temperature, fan speed and air distribution are regulated automatically.

Controls for:

- temperature on driver side
- air distribution
- fan speed
- temperature on front passenger side

: cooling
AUTO : automatic mode
: manual air recirculation
: demisting and defrosting

Heated rear window ⇨ 33, Heated seats ⇨ 41, Heated steering wheel ⇨ 82.

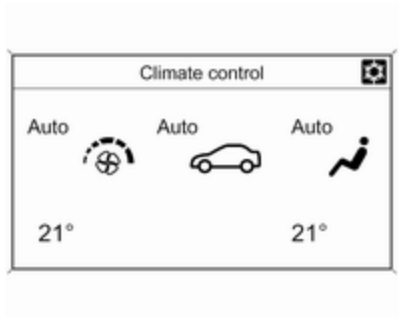

Climate control settings are shown on the Graphic-Info-Display, or depending on the version, on Colour-Info-Display. Setting modifications are briefly popped-up in both displays, superimposed over the currently displayed menu.

The electronic climate control system is only fully operational when the engine is running.

Automatic mode AUTO

Basic setting for maximum comfort:

- Press **AUTO**, the air distribution and fan speed are regulated automatically.
- Open all air vents to allow optimised air distribution in automatic mode.
- Press ☼ to switch on optimal cooling and demisting. Activation is indicated by the LED in the button.
- Set the preselected temperatures for driver and front passenger using the left and right rotary knob. Recommended temperature is 22 °C.

The fan speed regulation in automatic mode can be changed in the menu **Settings**.

Vehicle personalisation ⇨ 112.

Temperature preselection

Temperatures can be set to the desired value.

If the minimum temperature **Lo** is set, the climate control system runs at maximum cooling, if cooling ☼ is switched on.

If the maximum temperature **Hi** is set, the climate control system runs at maximum heating.

Note
If ☼ is switched on, reducing the set cabin temperature can cause the engine to restart from an Autostop or inhibit an Autostop.

Stop-start system ⇨ 142.

Demisting and defrosting the windows

- Press . Activation is indicated by the LED in the button.
- Temperature and air distribution are set automatically and the fan runs at high speed.
- Switch on heated rear window .
- To return to previous mode: press , to return to automatic mode: press **AUTO**.

Setting of automatic rear window heating can be changed in the menu **Settings** in the Info-Display. Vehicle personalisation ⇨ 112.

Note

If is pressed while the engine is running, an Autostop will be inhibited until is pressed again.

If is pressed while the engine is in an Autostop, the engine will restart automatically.

Stop-start system ⇨ 142.

Manual settings

Climate control system settings can be changed by activating the buttons and rotary knobs as follows. Changing a setting will deactivate the automatic mode.

Fan speed

Press lower button to decrease or upper button to increase fan speed as shown in the illustration. The fan speed is indicated by the number of segments in the display.

Pressing the lower button longer: fan and cooling are switched off.

Pressing the upper button longer: the fan runs at maximum speed.

To return to automatic mode: Press **AUTO**.

Air distribution

Press appropriate button for desired adjustment. Activation is indicated by the LED in the button.

- : to windscreen and front door windows
- : to head area via adjustable air vents
- : to foot well

All combinations are possible.

Return to automatic air distribution: press **AUTO**.

Cooling

Press to switch on cooling. Activation is indicated by the LED in the button. Cooling is only functional when the engine is running and climate control fan is switched on.

Press again to switch off cooling.

The air conditioning system cools and dehumidifies (dries) when outside temperature is above a specific level. Therefore condensation may form and drip from under the vehicle.

If no cooling or drying is required, switch off the cooling system for fuel saving reasons. Activated cooling might inhibit Autostops.

Stop-start system ⇨ 142.

Depending on the vehicle equipment, the display will indicate **AC** when cooling is activated or **Eco** when the cooling is deactivated.

Activation or deactivation of cooling operation after engine start can be changed in the menu **Settings** in the Info-Display. Vehicle personalisation ⇨ 112.

Air recirculation system

Press to activate air recirculation mode. Activation is indicated by the LED in the button.

Press ⚙ again to deactivate recirculation mode.

⚠Warning

The exchange of fresh air is reduced in air recirculation mode. In operation without cooling the air humidity increases, so the windows may mist up from inside. The quality of the passenger compartment air deteriorates, which may cause the vehicle occupants to feel drowsy.

In warm and very humid ambient air conditions, the windscreen might mist up from outside, when cold air is directed to it. If windscreen mists up from outside, activate windscreen wiper and deactivate ⚙.

Basic settings

Some settings can be changed in the Settings menu in the Info-Display. Vehicle personalisation ⇨ 112.

Auxiliary heater

Air heater

Quickheat is an electric auxiliary air heater which automatically warms up the passenger compartment more quickly.

Air vents

Adjustable air vents

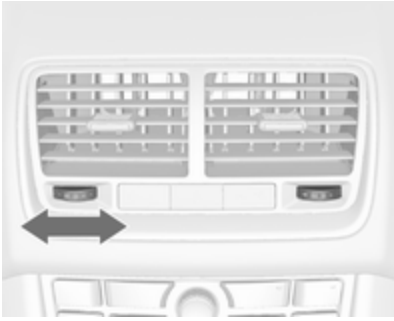

To open the vent, turn the adjuster wheel to the right. Adjust the air amount at the vent outlet by turning the adjuster wheel.

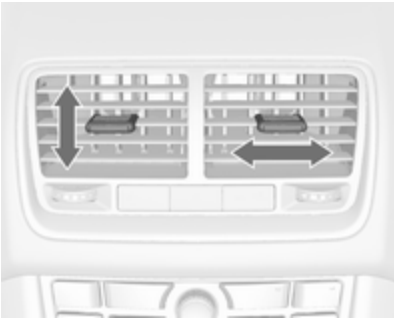

Direct the flow of air by tilting and swivelling the slats.

To close the vent, turn the adjuster wheel to the left.

⚠ Warning

Do not attach any objects to the slats of the air vents. Risk of damage and injury in case of an accident.

Fixed air vents

Additional air vents are located beneath the windscreen and door windows and in the foot wells.

Maintenance

Air intake

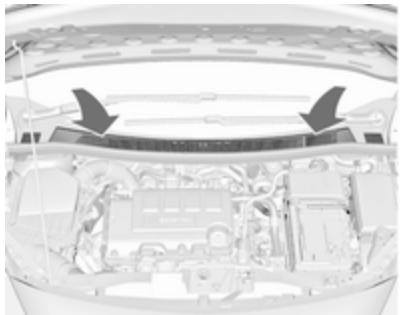

The air intake in front of the windscreen in the engine compartment must be kept clear to allow air intake. Remove any leaves, dirt or snow.

Pollen filter

Cabin air filtration

If the vehicle is equipped with a heating and ventilation system or with an air conditioning system, a particle filter cleans the cabin air from solid particulates such as pollen, dust, mould and bacteria from the air.

If the vehicle is equipped with an electronic climate control system, a charcoal air filter cleans the cabin air from solid particulates such as pollen, dust, mould and bacteria from the air. An additional layer of activated carbon absorbs unpleasant odours.

Air conditioning regular operation

In order to ensure continuously efficient performance, cooling must be operated for a few minutes once a month, irrespective of the weather and time of year. Operation with cooling is not possible when the outside temperature is too low.

Service

For optimal cooling performance, it is recommended to annually check the climate control system, starting 3 years after initial vehicle registration, including:

- functionality and pressure test
- heating functionality
- leakage check
- check of drive belts
- cleaning of condenser and evaporator drainage
- performance check

Driving and operating

Driving hints **139**
Control of the vehicle 139
Steering 140
Starting and operating **140**
New vehicle running-in 140
Ignition switch positions 140
Retained power off 140
Starting the engine 141
Overrun cut-off 142
Stop-start system 142
Parking 144
Engine exhaust **145**
Diesel particle filter 145
Catalytic converter 146
Automatic transmission **146**
Transmission display 146
Selector lever 147
Manual mode 148
Electronic driving programmes 148
Fault 148
Interruption of power supply 148
Manual transmission **149**
Brakes **150**
Antilock brake system 150
Parking brake 151
Brake assist 152
Hill start assist 152
Ride control systems **153**
Traction Control system 153
Electronic Stability Control 153
Driver assistance systems **154**
Cruise control 154
Parking assist 156
Rear view camera 158
Fuel **160**
Fuel for petrol engines 160
Fuel for diesel engines 160
Fuel for liquid gas operation 160
Refuelling 162
Fuel consumption - CO_2-Emissions 165
Trailer hitch **166**
General information 166
Driving characteristics and towing tips 167
Trailer towing 167
Towing equipment 168

Driving hints

Control of the vehicle

Never coast with engine not running (except during Autostop)

Many systems will not function in this situation (e.g. brake servo unit, power steering). Driving in this manner is a danger to yourself and others. All systems function during an Autostop, but there will be a controlled reduction in power steering assist and vehicle speed is reduced.

Stop-start system ⇨ 142.

Idle boost

If charging of the vehicle battery is required due to vehicle battery condition, the power output of the generator must be increased. This will be achieved by an idle boost which may be audible.

On vehicles with Uplevel-Display or Uplevel-Combi-Display, a message appears in the Driver Information Centre.

Pedals

To ensure the pedal travel is uninhibited, there must be no mats in the area of the pedals.

Use only floor mats, which fit properly and are fixed by the retainers on the driver side.

Steering

If power steering assist is lost because the engine stops or due to a system malfunction, the vehicle can be steered but may require a higher or lower steering effort.

Control indicator ⊖! ⇨ 97.

Caution
Vehicles equipped with hydraulic power steering: If the steering wheel is turned until it reaches the end of its travel, and is held in that position for more than 15 seconds, damage may occur to the power steering system and there may be loss of power steering assist.

Starting and operating

New vehicle running-in

Do not brake unnecessarily hard for the first few journeys.

During the first drive, smoke may occur because of wax and oil evaporating off the exhaust system. Park the vehicle in the open for a while after the first drive and avoid inhaling the fumes.

During the running-in period fuel and engine oil consumption may be higher and the cleaning process of the diesel particle filter may take place more often. Autostop may be inhibited to allow for charging the vehicle battery.

Diesel particle filter ⇨ 145.

Ignition switch positions

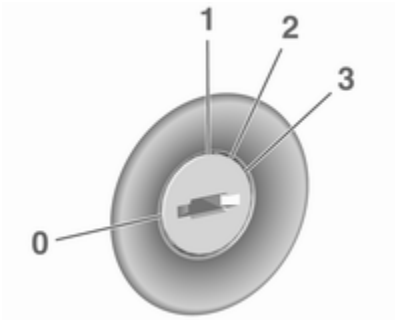

0 : ignition off
1 : steering wheel lock released, ignition off
2 : ignition on, for diesel engine: preheating
3 : starting

Retained power off

The following electronic systems can work until the driver's door is opened or at the latest for 10 minutes after the ignition is switched off:

- power windows
- power outlets

Power to the Infotainment system will continue to operate for 30 minutes or until the key is removed from the ignition, regardless of whether any door is opened.

Starting the engine

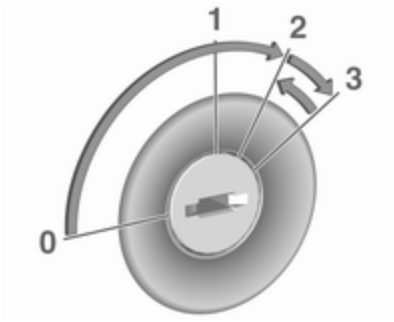

Manual transmission: operate clutch.

Automatic transmission: operate brake and move the selector lever to **P** or **N**.

Do not operate accelerator pedal.

Diesel engine: turn the key to position **2** for preheating until control indicator extinguishes.

Turn the key briefly to position **3** and release: an automatic procedure operates the starter with a short delay as long as the engine is running, see Automatic Starter Control.

Before restarting or to switch off the engine, turn the key back to position **0**.

During an Autostop, the engine can be started by depressing the clutch pedal.

Starting the vehicle at low temperatures

The start of the engine without additional heaters is possible down to -25 °C for diesel engines and -30 °C for petrol engines. Required is an engine oil with the correct viscosity, the correct fuel, performed services and a sufficiently charged vehicle battery. With temperatures below -30 °C the automatic transmission needs a warming phase of approx. five minutes. The selector lever must be in position **P**.

Automatic Starter Control

This function controls the engine starting procedure. The driver does not have to hold the key in position **3**. Once applied, the system will go on starting automatically until the engine is running. Because of the checking procedure, the engine starts running after a short delay.

Possible reasons for a non-starting engine:

- clutch pedal not operated (manual transmission)
- brake pedal not operated or selector lever not in **P** or **N** (automatic transmission)
- timeout occurred

Turbo engine warm-up

Upon start-up, engine available torque may be limited for a short time, especially when the engine temperature is cold. The limitation is to allow the lubrication system to fully protect the engine.

Overrun cut-off

The fuel supply is automatically cut off during overrun, i.e. when the vehicle is driven with a gear engaged but accelerator is released.

Stop-start system

The stop-start system helps to save fuel and to reduce the exhaust emissions. When conditions allow, it switches off the engine as soon as the vehicle is at a low speed or at a standstill, e.g. at a traffic light or in a traffic jam. It starts the engine automatically as soon as the clutch is depressed. A vehicle battery sensor ensures that an Autostop is only performed if the vehicle battery is sufficiently charged for a restart.

Activation

The stop-start system is available as soon as the engine is started, the vehicle starts-off and the conditions as stated below in this section are fulfilled.

Deactivation

Deactivate the stop-start system manually by pressing **eco**. The deactivation is indicated by the LED in the button extinguishing.

Autostop

If the vehicle is at a low speed or at a standstill, activate an Autostop as follows:

- Depress the clutch pedal.
- Set the lever in neutral.
- Release the clutch pedal.

The engine will be switched off while the ignition stays on.

An Autostop is indicated by the needle at the **AUTOSTOP** position in the tachometer.

During an Autostop, the heating and brake performance will be maintained.

Caution
The steering assist will be reduced during an Autostop.

Conditions for an Autostop

The stop-start system checks if each of the following conditions is fulfilled:

- The stop-start system is not manually deactivated.
- The bonnet is fully closed.
- The driver's door is closed or the driver's seat belt is fastened.
- The vehicle battery is sufficiently charged and in good condition.
- The engine is warmed up.
- The engine coolant temperature is not too high.
- The engine exhaust temperature is not too high, e.g. after driving with high engine load.
- The ambient temperature is above -5 °C.
- The defrost selection does not inhibit an Autostop.
- The climate control system allows an Autostop.
- The brake vacuum is sufficient.
- The self-cleaning function of the diesel particle filter is not active.
- The vehicle was driven at least at walking speed since the last Autostop.

Otherwise an Autostop will be inhibited.

An Autostop may become less available as the ambient temperature approaches the freezing point.

Certain settings of the climate control system may inhibit an Autostop. See "**Climate control**" chapter for further information ⇨ 132.

Immediately after motorway driving an Autostop may be inhibited.

New vehicle running-in ⇨ 140.

Vehicle battery discharge protection

To ensure reliable engine restarts, several vehicle battery discharge protection features are implemented as part of the stop-start system.

Power saving measures

During an Autostop, several electrical features such as auxiliary electric heater or rear window heating are disabled or switched into a power saving mode. The fan speed of the climate control system is reduced to save power.

Restart of the engine by the driver

Depress the clutch pedal to restart the engine.

The engine start is indicated by the needle at the idle speed position in the tachometer.

If the selector lever is shifted out of neutral before depressing the clutch first, control indicator illuminates or is shown as a symbol in the Driver Information Centre.

Control indicator ⇨ 96.

Restart of the engine by the stop-start system

The selector lever must be in neutral to enable an automatic restart.

If one of the following conditions occurs during an Autostop, the engine will be restarted automatically by the stop-start system.

- The stop-start system is manually deactivated.
- The bonnet is opened.
- The driver's seat belt is unfastened and the driver's door is opened.
- The engine temperature is too low.
- The charging level of the vehicle battery is below a defined level.
- The brake vacuum is not sufficient.
- The vehicle is driven at least at walking speed.
- The climate control system requests an engine start.
- The air conditioning is manually switched on.

If the bonnet is not fully closed, a warning message is displayed in the Driver Information Centre.

If an electrical accessory, e.g. a portable CD player, is connected to the power outlet, a brief power drop during restart might be noticeable.

Parking

⚠ Warning

- Do not park the vehicle on an easily ignitable surface. The high temperature of the exhaust system could ignite the surface.
- Always apply parking brake.

  Pull switch Ⓟ for approx. one second.

  The electric parking brake is applied when control indicator Ⓟ illuminates ⇨ 96.
- Switch off the engine.
- If the vehicle is on a level surface or uphill slope, engage first gear or set the selector lever to position **P** before removing the ignition key. On an uphill slope, turn the front wheels away from the kerb.

  If the vehicle is on a downhill slope, engage reverse gear or set the selector lever to position **P** before removing the ignition key. Turn the front wheels towards the kerb.
- Close the windows.
- Remove the ignition key from the ignition switch. Turn the steering wheel until the steering wheel lock is felt to engage.

  For vehicles with automatic transmission, the key can only be removed when the selector lever is in position **P**.

Lock the vehicle and activate the anti-theft alarm system.

Note
In the event of an accident with airbag deployment, the engine is turned off automatically if the vehicle comes to a standstill within a certain time.

Engine exhaust

⚠ Danger

Engine exhaust gases contain poisonous carbon monoxide, which is colourless and odourless and could be fatal if inhaled.

If exhaust gases enter the interior of the vehicle, open the windows. Have the cause of the fault rectified by a workshop.

Avoid driving with an open load compartment, otherwise exhaust gases could enter the vehicle.

Diesel particle filter

The diesel particle filter system filters harmful soot particles out of the exhaust gases. The system includes a self-cleaning function that runs automatically during driving without any notification. The filter is cleaned by periodically burning off the soot particles at high temperature. This process takes place automatically under set driving conditions and may take up to 25 minutes. Typically it needs between 7 and 12 minutes. Autostop is not available and fuel consumption may be higher during this period. The emission of smells and smoke during this process is normal.

Under certain driving conditions, e.g. short distances, the system cannot clean itself automatically.

If the cleaning of the filter is required and if previous driving conditions did not enable automatic cleaning, it will be indicated by control indicator . Simultaneously **Diesel partic. filter is full continue driving** or warning code 55 appears in the Driver Information Centre.

 illuminates when diesel particle filter is full. Start cleaning process as soon as possible.

 flashes when diesel particle filter has reached the maximum filling level. Start cleaning process immediately to avoid damage to the engine.

Cleaning process

To activate cleaning process, continue driving, keeping engine speed above 2000 revolutions per minute. Shift down if necessary. Diesel particle filter cleaning is then started.

If control indicator illuminates additionally, cleaning is not possible, seek the assistance of a workshop.

Caution

If the cleaning process is interrupted, there is a risk of provoking severe engine damage.

Cleaning takes place quickest at high engine speeds and loads.

Control indicator extinguishes as soon as the self-cleaning operation is complete.

Catalytic converter

The catalytic converter reduces the amount of harmful substances in the exhaust gases.

Caution

Fuel grades other than those listed on pages ⇨ 160, ⇨ 228 could damage the catalytic converter or electronic components.

Unburnt petrol will overheat and damage the catalytic converter. Therefore avoid excessive use of the starter, running the fuel tank dry and starting the engine by pushing or towing.

In the event of misfiring, uneven engine running, a reduction in engine performance or other unusual problems, have the cause of the fault rectified by a workshop as soon as possible. In an emergency, driving can be continued for a short period, keeping vehicle speed and engine speed low.

Automatic transmission

The automatic transmission permits automatic gearshifting (automatic mode) or manual gearshifting (manual mode).

Transmission display

The mode or selected gear is shown in the transmission display.

Selector lever

P : park position, wheels are locked, engage only when the vehicle is stationary and the parking brake is applied
R : reverse gear, engage only when the vehicle is stationary
N : neutral
D : automatic mode with all gears

The selector lever is locked in **P** and can only be moved when the ignition is on and the brake pedal is applied.

Without brake pedal applied, the control indicator ⊘ illuminates.

If the selector lever is not in **P** when the ignition is switched off, the control indicator ⊘ and **P** flash.

To engage **P** or **R**, press the release button.

The engine can only be started with the lever in position **P** or **N**. When position **N** is selected, press the brake pedal or apply the parking brake before starting.

Do not accelerate while engaging a gear. Never depress the accelerator pedal and brake pedal at the same time.

When a gear is engaged, the vehicle slowly begins to creep when the brake is released.

Engine braking

To utilise the engine braking effect, select a lower gear in good time when driving downhill, see manual mode.

Rocking the vehicle

Rocking the vehicle is only permissible if the vehicle is stuck in sand, mud or snow. Move the selector lever between **D** and **R** in a repeat pattern. Do not race the engine and avoid sudden acceleration.

Parking

Apply the parking brake and engage **P**.

The ignition key can only be removed when the selector lever is in position **P**.

Manual mode

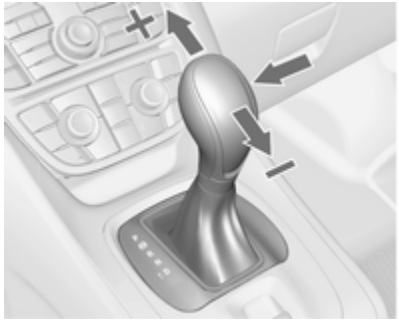

Move selector lever out of position **D** towards the left and then forwards or backwards.

+ : shift to a higher gear

– : shift to a lower gear

If a higher gear is selected when vehicle speed is too low, or a lower gear when vehicle speed is too high, the shift is not executed. This can cause a message in the Driver Information Centre.

In manual mode, no automatic shifting to a higher gear takes place at high engine revolutions.

Electronic driving programmes

- Following a cold start, the operating temperature programme increases engine speed to quickly bring the catalytic converter to the required temperature.
- The automatic neutral shift function automatically shifts to idling when the vehicle is stopped with a forward gear engaged and the brake pedal is pressed.
- Special programmes automatically adapt the shifting points when driving up inclines or down hills.

Kickdown

If the accelerator pedal is pressed down completely in automatic mode, the transmission shifts to a lower gear depending on engine speed.

Fault

In the event of a fault, illuminates. Additionally a code number or a vehicle message is displayed in the Driver Information Centre. Vehicle messages ⇨ 106.

The transmission no longer shifts automatically. Continued travel is possible with manual shifting.

Only the highest gear is available. Depending on the fault, second gear may also be available in manual mode. Shift only when vehicle is at a standstill.

Have the cause of the fault remedied by a workshop.

Interruption of power supply

In the event of an interruption of power supply, the selector lever cannot be moved out of the **P** position. The ignition key cannot be removed from the ignition switch.

If the vehicle battery is discharged, start the vehicle using jump leads ⇨ 213.

If the vehicle battery is not the cause of the fault, release the selector lever.

1. Apply the parking brake.

2. Hold the selector lever trim at the marked position and pull to unlatch at the back.
3. Fold the selector lever trim upwards. Pull to unlatch at the front.
4. Move the selector lever trim to the left. Take care that the plug and the wiring harness at the bottom are not damaged.

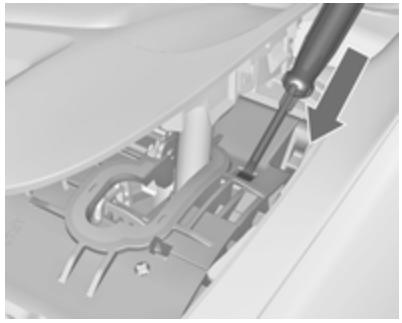

5. Insert a screwdriver into the opening as far as it will go and move the selector lever out of **P** or **N**. If **P** or **N** is engaged again, the selector lever will be locked in position again. Have the cause of the power supply interruption remedied by a workshop.
6. Mount the selector lever trim onto the centre console and refit.

Manual transmission

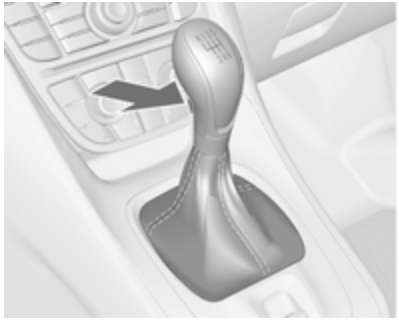

To engage reverse, depress the clutch pedal and press the release button on the selector lever and engage the gear.

If the gear does not engage, set the lever to neutral, release the clutch pedal and depress again; then repeat gear selection.

Do not slip the clutch unnecessarily.

When operating, depress the clutch pedal completely. Do not use the pedal as a foot rest.

Caution
It is not advisable to drive with the hand resting on the selector lever.

Stop-start system ⇨ 142.

Brakes

The brake system comprises two independent brake circuits.

If a brake circuit fails, the vehicle can still be braked using the other brake circuit. However, braking effect is achieved only when the brake pedal is depressed firmly. Considerably more force is needed for this. The braking distance is extended. Seek the assistance of a workshop before continuing the journey.

When the engine is not running, the support of the brake servo unit disappears once the brake pedal has been depressed once or twice. Braking effect is not reduced, but braking requires significantly greater force. It is especially important to bear this in mind when being towed.

Control indicator ⇨ 96.

Antilock brake system

Antilock brake system (ABS) prevents the wheels from locking.

ABS starts to regulate brake pressure as soon as a wheel shows a tendency to lock. The vehicle remains steerable, even during hard braking.

ABS control is made apparent through a pulse in the brake pedal and the noise of the regulation process.

For optimum braking, keep the brake pedal fully depressed throughout the braking process, despite the fact that the pedal is pulsating. Do not reduce the pressure on the pedal.

After starting off, the system performs a self-test which may be audible.

Control indicator ⇨ 97.

Adaptive brake light

During full braking, all three brake lights flash for the duration of ABS control.

Fault

⚠ Warning

If there is a fault in the ABS, the wheels may be liable to lock due to braking that is heavier than normal. The advantages of ABS are no longer available. During hard braking, the vehicle can no longer be steered and may swerve.

Have the cause of the fault remedied by a workshop.

Parking brake

Electric parking brake

Applying when vehicle is stationary

⚠ Warning

Pull switch Ⓟ for approx. one second, the electric parking brake operates automatically with an adequate force. For maximum force, e.g. parking with trailer or on inclines, pull switch Ⓟ twice.

The electric parking brake is applied when control indicator Ⓟ illuminates ⇨ 97.

The electric parking brake can always be activated, even if the ignition is off.

Do not operate electric parking brake system too often with engine not running as this will discharge the vehicle battery.

Before leaving the vehicle, check the electric parking brake status.

Control indicator Ⓟ ⇨ 97.

Releasing

Switch on ignition. Keep brake pedal depressed and then push switch Ⓟ.

Drive away function

Depressing clutch pedal (manual transmission) or engaging **D** (automatic transmission) and then depressing the accelerator pedal releases the electric parking brake

automatically. This is not possible when the switch Ⓟ is pulled at the same time.

This function also helps driving away on inclines.

Aggressive drive-away may reduce lifetime of wear parts.

Dynamic braking when vehicle is moving

When the vehicle is moving and switch Ⓟ is kept pulled, the electric parking brake system will decelerate the vehicle, but will not apply statically.

As soon as switch Ⓟ is released, dynamic braking will be stopped.

Fault

Failure mode of electric parking brake is indicated by control indicator and by a code number or a vehicle message which is displayed in the Driver Information Centre.

Control indicator ⇨ 97, vehicle messages ⇨ 106.

Apply electric parking brake: pull and hold switch Ⓟ for more than five seconds. If control indicator Ⓟ illuminates, electric parking brake is applied.

Release electric parking brake: push and hold switch Ⓟ for more than two seconds. If control indicator Ⓟ extinguishes, electric parking brake is released.

Control indicator Ⓟ flashes: electric parking brake is not fully applied or released. When continuously flashing, release electric parking brake and retry applying.

Control indicator Ⓟ ⇨ 97.

Brake assist

If the brake pedal is depressed quickly and forcefully, maximum brake force is automatically applied (full braking).

Maintain steady pressure on the brake pedal for as long as full braking is required. Maximum brake force is automatically reduced when the brake pedal is released.

Hill start assist

The system helps prevent unintended movement when driving away on inclines.

When releasing the foot brake after stopping on an incline, the brakes remain on for a further two seconds. The brakes release automatically as soon as the vehicle begins to accelerate.

The hill start assist is not active during an Autostop.

Stop-start system ⇨ 142.

Ride control systems

Traction Control system

The Traction Control system (TC) is a component of the Electronic Stability Control system.

TC improves driving stability when necessary, regardless of the type of road surface or tyre grip, by preventing the drive wheels from spinning.

As soon as the drive wheels starts to spin, engine output is reduced and the wheel spinning the most is braked individually. This considerably improves the driving stability of the vehicle on slippery road surfaces.

TC is operational as soon as the control indicator extinguishes.

When TC is active flashes.

⚠Warning

Do not let this special safety feature tempt you into taking risks when driving.

Adapt speed to the road conditions.

Control indicator ⇨ 98.

Deactivation

TC can be switched off when spinning of drive wheels is required: press briefly.

Control indicator illuminates.

TC is reactivated by pressing again.

TC is also reactivated the next time the ignition is switched on.

Electronic Stability Control

Electronic Stability Control (ESC) improves driving stability when necessary, regardless of the type of road surface or tyre grip.

As soon as the vehicle starts to swerve (understeer/oversteer), engine output is reduced and the wheels are braked individually.

ESC operates in combination with the Traction Control system (TC). It prevents the drive wheels from spinning.

ESC is operational as soon as the control indicator extinguishes.

When ESC is active flashes.

⚠Warning

Do not let this special safety feature tempt you into taking risks when driving.

Adapt speed to the road conditions.

Control indicator ⇨ 98.

Deactivation

ESC can be deactivated: hold depressed for approx. 5 seconds.

Control indicator illuminates.

ESC is reactivated by pressing again. If the TC system was previously disabled, both TC and ESC are reactivated.

ESC is also reactivated the next time the ignition is switched on.

Fault

If there is a fault in the system the control indicator illuminates continuously and a message appears in the Driver Information Centre. The system is not operational.

Have the cause of the fault remedied by a workshop.

Driver assistance systems

⚠Warning

Driver assistance systems are developed to support the driver and not to replace the driver's attention.

The driver accepts full responsibility when driving the vehicle.

When using driver assistance systems, always take care regarding the current traffic situation.

Cruise control

The cruise control can store and maintain speeds of approx. 30 to 200 km/h. Deviations from the stored speeds may occur when driving uphill or downhill.

For safety reasons the cruise control cannot be activated until the foot brake has been operated once. Activating in first gear is not possible.

Do not use the cruise control if it is not advisable to maintain a constant speed.

With automatic transmission, only activate cruise control in automatic mode.

Control indicator ⌚ ⇨ 100.

Switching on

Press rocker switch ⌚ at the upper end, control indicator ⌚ illuminates white.

Activation

Accelerate to the desired speed and turn thumb wheel to **SET/-**, the current speed is stored and maintained. Control indicator ⌚ illuminates green. Accelerator pedal can be released.

Vehicle speed can be increased by depressing the accelerator pedal. When the accelerator pedal is released, the previously stored speed is resumed.

Cruise control remains activated while gearshifting.

Increase speed

With cruise control active, hold thumb wheel turned to **RES/+** or briefly turn to **RES/+** repeatedly: speed increases continuously or in small increments.

Alternatively accelerate to the desired speed and store by turning to **RES/+**.

Reduce speed

With cruise control active, hold thumb wheel turned to **SET/-** or briefly turn to **SET/-** repeatedly: speed decreases continuously or in small increments.

Deactivation

Press ⌚, control indicator ⌚ illuminates white. Cruise control is deactivated. Last stored speed remains in memory for later speed resume.

Automatic deactivation:

- Vehicle speed is below approx. 30 km/h.
- The brake pedal is depressed.
- The clutch pedal is depressed for a few seconds.
- Selector lever is in **N**.
- Engine speed is in a very low range.
- The Traction Control system or Electronic Stability Control is operating.

Resume stored speed

Turn thumb wheel to **RES/+** at a speed above 30 km/h. The stored speed will be obtained.

Switching off

Press rocker switch at the lower end, control indicator extinguishes. The stored speed is deleted. Switching off the ignition also deletes the stored speed.

Parking assist

⚠Warning

The driver bears full responsibility for the parking manoeuvre.

Always check the surrounding area when driving backwards or forwards while using parking assist system.

The parking assist makes parking easier by measuring the distance between the vehicle and obstacles, and giving acoustic signals.

The system consists of four ultrasonic parking sensors in the rear bumper. If the vehicle is equipped with a front parking assist, the system consists of four additional ultrasonic parking sensors in the front bumper.

Control indicator P ⇨ 97.

Operation

When reverse gear is engaged, the front and rear parking assist is ready to operate.

An illuminated LED in the parking assist button P indicates that the system is ready to operate.

The front parking assist can also be activated at a speed up to 11 km/h with a brief press of the parking assist button.

If P is pressed once within an ignition cycle, the front parking assist is deactivated at a speed above 11 km/h. It will be reactivated if vehicle speed has not exceeded

25 km/h beforehand. If vehicle speed has exceeded 25 km/h beforehand, front parking assist remains deactivated when speed drops below 11 km/h.

When the system is deactivated, the LED in the button extinguishes and **Park Assist Off** pops-up in the Driver Information Centre.

The system is deactivated automatically when exceeding 25 km/h.

If the vehicle is equipped with rear parking assist only, the system automatically switches off when reverse gear is disengaged. Manual deactivation is also possible by pressing P.

Indication

An obstacle is indicated by a buzzing sound. The interval between the sounds becomes shorter as the vehicle gets closer to the obstacle. When the distance is less than 30 cm, the buzzing is continuous.

Fault

In the event of a fault in the system, P illuminates or a vehicle message is displayed in the Driver Information Centre.

Additionally, P illuminates or a vehicle message is displayed in the Driver Information Centre if a malfunction of the system due to temporary conditions like snow covered sensors is detected.

Vehicle messages ⇨ 106.

Important hints for using the parking assist systems

⚠ Warning

Under certain circumstances, various reflective surfaces on objects or clothing as well as external noise sources may cause the system to fail to detect obstacles.

Special attention must be paid to low obstacles which can damage the lower part of the bumper. If such obstacles leave the detection area of the sensors during approach of the vehicle, a continuous warning tone will sound.

Caution

Performance of the sensors can be reduced when sensors are covered, e.g. by ice or snow.

Performance of the parking assist systems can be reduced due to heavy loading.

Special conditions apply if there are taller vehicles involved (e.g. off-road vehicles, mini vans, vans). Object identification in the upper part of these vehicles cannot be guaranteed.

Objects with a very small reflection cross-section, e.g. objects of narrow size or soft materials, may not be detected by the system.

The parking assist system will not avoid a collision with objects which are out of the detection range of the sensors.

Note
The parking assist system automatically detects factory-fitted towing equipment. It is deactivated when the connector is plugged in.

The sensor may detect a non-existent object (echo disturbance) caused by external acoustic or mechanical disturbances.

Note
If engaging a forward gear and exceeding a certain speed, the rear parking assist will be deactivated when the rear carrier system is extended.

If engaging reverse at first, the parking assist will detect the rear carrier system and provide a buzzing sound. Press P briefly to deactivate the parking assist.

Rear view camera

The rear view camera assists the driver when reversing by displaying a view of the area behind the vehicle.

The view of the camera is displayed in the Colour-Info-Display.

⚠ Warning

The rear view camera does not replace driver vision. Note that objects that are outside the camera's field of view and the advanced parking assist sensors, e.g. below the bumper or underneath the vehicle, are not displayed.

Do not reverse the vehicle by only looking at the Info-Display and check the surrounding behind and around the vehicle before reversing.

Activation

Rear view camera is automatically activated when reverse gear is engaged.

Functionality

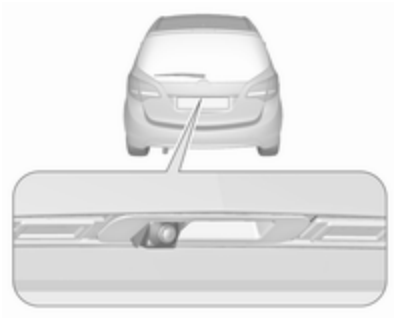

The camera is mounted in the tailgate handle and has a viewing angle of 130°.

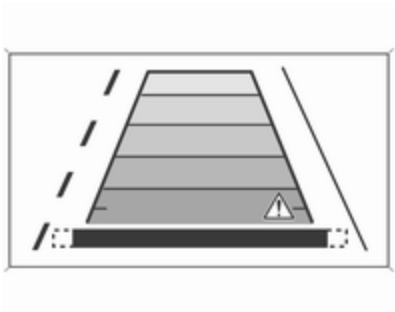

Due to the high position of the camera the rear bumper can be seen on the display as a guide to position.

The area displayed by the camera is limited. The distance of the image that appears on the display differs from the actual distance.

Guiding lines

Dynamic guiding lines are horizontal lines in 1 metre intervals projected on the picture to define the distance to shown objects.

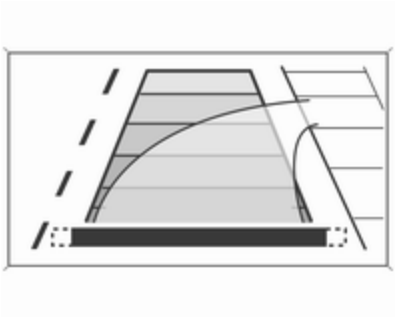

Trajectory lane of the vehicle is shown in accordance with the steering angle.

The function can be deactivated in the menu **Settings** in the Info-Display. Vehicle personalisation ⇨ 112.

Warning symbols

Warning symbols are indicated as triangles ⚠on the picture which show obstacles detected by the rear sensors of the advanced parking assist.

Display settings

Navi 650/Navi 950: Brightness can be set by first pressing and then turning the outer ring of the multifunction knob.

CD 600: Brightness can be set by first pressing and then turning the multifunction knob.

Deactivation

The camera is deactivated when a certain forward speed is exceeded or if reverse gear is not engaged for approx. 10 seconds.

Activation or deactivation of the rear view camera can be changed in the menu **Settings** in the Info-Display. Vehicle personalisation ⇨ 112.

Fault

Fault messages are displayed with a ⚠on the top line of the Info-Display.

The rear view camera may not operate properly when:

- The surrounding is dark.
- The sun or the beam of headlights is shining directly into the camera lens.
- Ice, snow, mud, or anything else covers the camera lens. Clean the lens, rinse it with water, and wipe it with a soft cloth.
- The tailgate is not closed correctly.
- The vehicle had a rear end accident.
- There are extreme temperature changes.

Fuel

Fuel for petrol engines

Only use unleaded fuel that complies with European standard EN 228 or E DIN 51626-1 or equivalent.

The engine is capable of running with fuel that contains up to 10% ethanol (e.g. named E10).

Use fuel with the recommended octane rating ⇨ 228.

Caution

Do not use fuel or fuel additives that contain metallic compounds such as manganese-based additives. This may cause engine damage.

Caution

Use of fuel that does not comply to EN 228 or E DIN 51626-1 or equivalent can lead to deposits or engine damage.

Caution

Use of fuel with too low an octane rating could lead to uncontrolled combustion and engine damage.

Fuel for diesel engines

Only use diesel fuel that complies with EN 590.

In countries outside the European Union use Euro-Diesel fuel with a sulfur concentration below 50 ppm.

Caution

Use of fuel that does not comply to EN 590 or similar can lead to engine powerloss, increased wear or engine damage.

Do not use marine diesel oils, heating oils, Aquazole and similar diesel-water emulsions. Diesel fuels must not be diluted with fuels for petrol engines.

Fuel for liquid gas operation

Liquid gas is known as LPG (Liquefied Petroleum Gas) or under its French name GPL (Gaz de Pétrole Liquéfié). LPG is also known as Autogas.

LPG consists mainly of propane and butane. The octane rating is between 105 and 115, depending on the butane proportion. LPG is stored liquid at around five to ten bar pressure.

The boiling point depends on the pressure and mixing ratio. At ambient pressure, it is between -42 °C (pure propane) and -0.5 °C (pure butane).

Caution

The system works at an ambient temperature of approx. -8 °C to 100 °C.

Full function of the LPG system can only be guaranteed with liquid gas which complies with the minimum requirements of DIN EN 589.

Fuel selector

Pressing **LPG** switches between petrol and liquid gas operation as soon as the required parameters (coolant temperature, gas temperature and minimum engine speed) have been reached. The requirements are usually fulfilled after around 60 seconds (depending on exterior temperature) and the first firm press on the accelerator. The LED ▬ status shows the current operating mode.

▬ off	:	petrol operation
▬ flashes	:	checking conditions for fuel transition to liquid gas operation. Illuminates if conditions are fulfilled.
▬ illuminates	:	liquid gas operation
▬ flashes five times and extinguishes	:	liquid gas tank is empty or failure in liquid gas system. A message is displayed in the Driver Information Centre.

The selected fuel mode is stored and reactivated at the next ignition cycle if conditions allow.

As soon as the liquid gas tanks are empty, petrol operation is automatically engaged until the ignition is switched off.

Every six months, run the petrol tank down until control indicator ⬬ illuminates, then refuel. This helps maintain fuel quality and system function for petrol operation.

Fill the tank completely at regular intervals to prevent corrosion in the tank.

Faults and remedies

If gas mode is not possible, check the following:

- Is there enough liquid gas present?
- Is there enough petrol present for starting?

Due to extreme temperatures in combination with the gas composition, it may take slightly longer before the system switches from petrol to liquid gas mode.

In extreme situations, the system may also switch back to petrol mode if the minimum requirements are not fulfilled. If conditions allow, it might be possible to manually switch back to liquid gas operation.

Seek the assistance of a workshop in the event of all other faults.

Caution

Repairs and adjustments may only be made by trained specialists in order to maintain the safety and warranty on the LPG system.

Liquid gas is given a particular odour (odorised) so that any leaks can be detected easily.

⚠Warning

If you smell gas in the vehicle or in the immediate vicinity, switch to petrol mode immediately. No smoking. No naked flames or ignition sources.

If possible, close the manual shut-off valve on the multivalve. The multivalve is located on the liquid gas tank in the load compartment, underneath the rear floor cover.

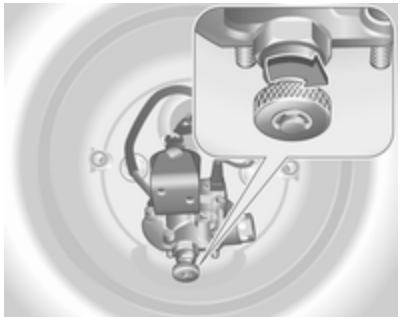

Turn the thumb wheel clockwise.

If no further gas odour is perceptible when the manual shut-off valve is closed, the vehicle can be used in petrol mode. If the gas odour persists, do not start the engine. Have the cause of the fault remedied by a workshop.

When using underground car parks, follow the instructions of the operator and local laws.

Note
In the event of an accident, switch off the ignition and lights. Close the manual shut-off valve on multivalve.

Refuelling

⚠Danger

Before refuelling, switch off ignition and any external heaters with combustion chambers.

Follow the operating and safety instructions of the filling station when refuelling.

⚠ Danger

Fuel is flammable and explosive. No smoking. No naked flames or sparks.

If you can smell fuel in your vehicle, have the cause of this remedied immediately by a workshop.

Caution

In case of misfuelling, do not switch on ignition.

Fuel filler flap is located at right rear side of vehicle.

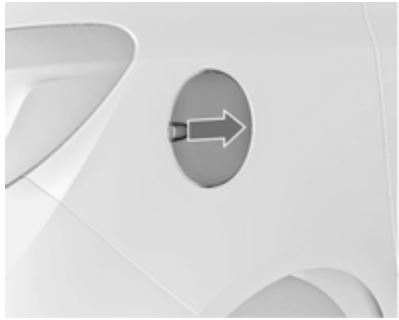

The fuel filler flap can only be opened if the vehicle is unlocked. Pull flap at the recess and open.

To open, turn the cap slowly anticlockwise.

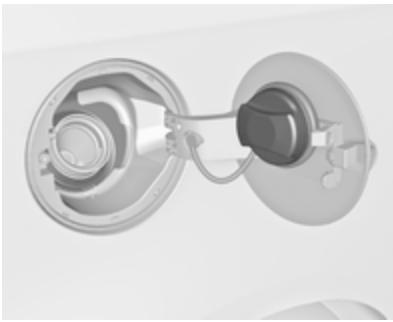

The fuel filler cap can be retained in the bracket on the fuel filler flap.

For refuelling, fully insert the pump nozzle and switch it on.

After automatic cut-off, it can be topped up with max. two doses of fuel.

Caution

Wipe off any overflowing fuel immediately.

To close, turn the fuel filler cap clockwise until it clicks.

Close the flap and let engage.

Fuel filler cap

Only use genuine fuel filler caps. Diesel-engined vehicles have special fuel filler caps.

Liquid gas refuelling

Follow the operating and safety instructions of the filling station when refuelling.

The filling valve for the liquid gas is behind the fuel filler cap.

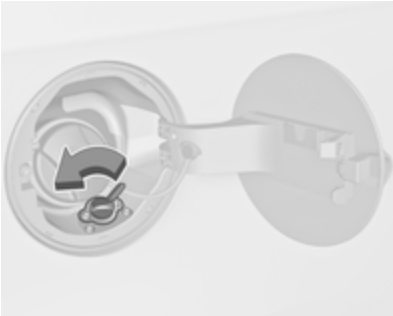

Unscrew protective cap from the filler neck.

Screw the required adapter hand-tight onto the filler neck.

ACME Adapter: Screw the nut of the filling nozzle onto the adapter. Press locking lever on filler nozzle down.

DISH filler neck: Place the filler nozzle into the adapter. Press locking lever on filler nozzle down.

Bayonet filler neck: Place filler nozzle on the adapter and turn to the left or right through one quarter turn. Pull locking lever of filler nozzle fully.

EURO filler neck: Press the filler nozzle onto the adapter until it engages.

Press the button of the liquid gas supply point. The filling system stops or begins to run slowly when 80% of the tank volume is reached (maximum fill level).

Release button on filling system and the filling process stops. Release the locking lever and remove the filler nozzle. A small quantity of liquid gas can escape.

Remove adapter and stow in vehicle.

Fit protective cap to prevent the penetration of foreign bodies into the filler opening and the system.

⚠Warning

Due to the system design, an escape of liquid gas after releasing the locking lever is unavoidable. Avoid inhaling.

⚠Warning

The liquid gas tank may only be filled to 80% for safety reasons.

The multivalve on the liquid gas tank automatically limits the fill quantity. If a larger quantity is added, we recommend not exposing the vehicle to the sun until the excess amount has been used up.

Filling adapter

As filling systems are not standardised, different adapters are required which are available from Opel Distributors and from Opel Authorised Repairers.

ACME adapter: Belgium, Germany, Ireland, Luxembourg, Switzerland

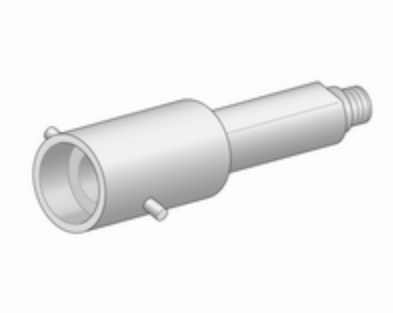

Bayonet adapter: Netherlands, Norway, Spain, United Kingdom

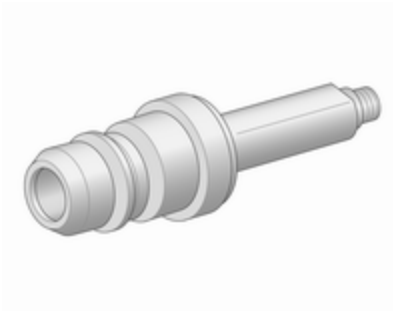

EURO adapter: Spain

DISH adapter: Bosnia-Herzegovina, Bulgaria, Denmark, Estonia, France, Greece, Italy, Croatia, Latvia, Lithuania, Macedonia, Austria, Poland, Portugal, Romania, Sweden, Switzerland, Serbia, Slovakia, Slovenia, Czech Republic, Turkey, Ukraine, Hungary

Fuel consumption - CO_2-Emissions

The fuel consumption (combined) of the model Opel Meriva is within a range of 7.4 to 3.7 l/100 km.

The CO_2 emission (combined) is within a range of 169 to 99 g/km.

For the values specific for your vehicle, refer to the EEC Certificate of Conformity provided with your vehicle or other national registration documents.

General information

The official fuel consumption and specific CO_2 emission figures quoted relate to the EU base model with standard equipment.

Fuel consumption data and CO_2 emission data are determined according to regulation R (EC) No. 715/2007 (in the version respectively applicable), taking into consideration the vehicle weight in running order, as specified by the regulation.

The figures are provided only for the purpose of comparison between different vehicle variants and must not be taken as a guarantee for the actual fuel consumption of a particular vehicle. Additional equipment may result in slightly higher results than the stated consumption and CO_2 figures.

Furthermore, fuel consumption is dependent on personal driving style as well as road and traffic conditions.

Trailer hitch

General information

Only use towing equipment that has been approved for your vehicle. Entrust retrofitting of towing equipment to a workshop. It may be necessary to make changes that affect the cooling system, heat shields or other equipment.

The bulb outage detection function for trailer brake light cannot detect a partial bulb outage, e.g. in case of four times five watt bulbs, the function only detects lamp outage when only a single five Watt lamp remains or none remain.

Fitting of towing equipment could cover the opening of the towing eye. If this is the case use the coupling ball bar for towing. Always keep the coupling ball bar in the vehicle when not in use.

Driving characteristics and towing tips

Before attaching a trailer, lubricate the coupling ball. However, do not do so if a stabiliser, which acts on the coupling ball, is being used to reduce snaking movements.

For trailers with low driving stability and caravan trailers with a permitted gross vehicle weight of more than 1100 kg the use of a stabiliser is strongly recommended when driving above 80 km/h.

If the trailer starts snaking, drive more slowly, do not attempt to correct the steering and brake sharply if necessary.

When driving downhill, drive in the same gear as if driving uphill and drive at a similar speed.

Adjust tyre pressure to the value specified for full load ⇨ 235.

Trailer towing

Trailer loads

⚠Warning

Vehicles with engine A13DTE:

Use of towing equipment is permissible for attaching compatible bicycle carriers only. Do not use towing equipment for trailer towing.

The permissible trailer loads are vehicle and engine-dependent maximum values which must not be exceeded. The actual trailer load is the difference between the actual gross weight of the trailer and the actual coupling socket load with the trailer coupled.

The permissible trailer loads are specified in the vehicle documents. In general, they are valid for gradients up to max. 12%.

The permitted trailer load applies up to the specified incline and up to an altitude of 1000 metres above sea level. Since engine power decreases as altitude increases due to the air becoming thinner, therefore reducing climbing ability, the permissible gross train weight also decreases by 10% for every 1000 metres of additional altitude. The gross train weight does not have to be reduced when driving on roads with slight inclines (less than 8%, e.g. motorways).

The permissible gross train weight must not be exceeded. This weight is specified on the identification plate ⇨ 224.

Vertical coupling load

The vertical coupling load is the load exerted by the trailer on the coupling ball. It can be varied by changing the weight distribution when loading the trailer.

The maximum permissible vertical coupling load (75 kg) is specified on the towing equipment identification plate and in the vehicle documents. Always aim for the maximum load, especially in the case of heavy trailers. The vertical coupling load should never fall below 25 kg.

Rear axle load

When the trailer is coupled and the towing vehicle fully loaded, the permissible rear axle load (see identification plate or vehicle documents) may be exceeded by 80 kg (vehicles with LPG system: 110 kg), the gross vehicle weight rating may be exceeded by 70 kg (vehicles with LPG system: 95 kg). If the permissible rear axle load is exceeded, a maximum speed of 100 km/h applies.

Towing equipment

Caution
When operating without a trailer, remove the coupling ball bar.

Stowage of the detachable coupling ball bar

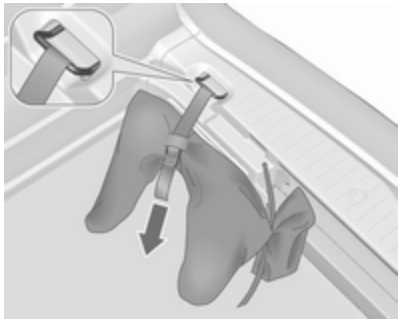

The bag with the coupling ball bar is stowed in the rear stowage compartment on the floor.

Run the strap through the lashing eye and tighten the strap to secure the bag.

Fitting the detachable coupling ball bar

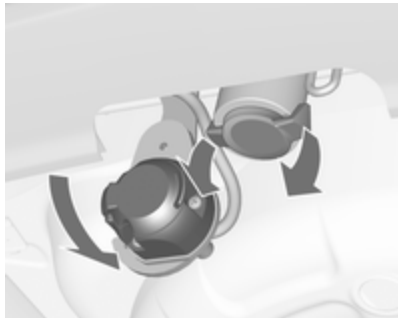

Disengage and fold down the socket. Remove the sealing plug from the opening for the coupling ball bar and stow it.

Checking the tensioning of the coupling ball bar

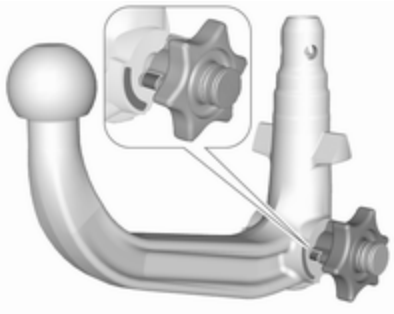

- Red marking on rotary knob must point towards green marking on coupling ball bar.
- The gap between the rotary knob and the coupling ball bar must be approx. 5 mm.

Otherwise, the coupling ball bar must be tensioned before being inserted:

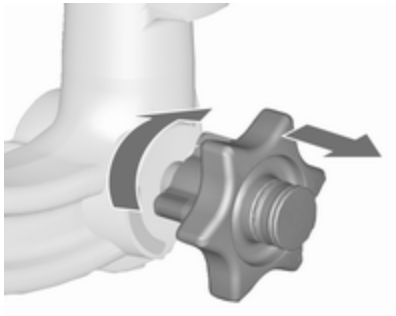

Pull out rotary knob and turn clockwise as far as it will go.

Inserting the coupling ball bar

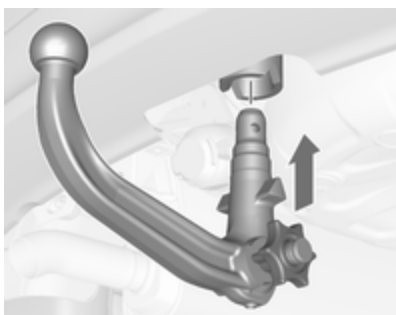

Insert the tensioned coupling ball bar in the opening and push firmly upwards until it audibly engages.

The rotary handle snaps back into its original position resting against the coupling ball bar without a gap.

⚠ Warning
Do not touch rotary handle during insertion.

Lock the coupling ball bar by turning the key clockwise. Remove the key and close the protective flap.

Eye for break-away stopping cable

Attach breakaway stopping cable to eye.

Check that the coupling ball bar is correctly installed

- Green marking on rotary knob must point towards green marking on coupling ball bar.
- There must be no gap between the rotary handle and the coupling ball bar.
- The coupling ball bar must be firmly engaged in the opening.
- The coupling ball bar must be locked and the key removed.

⚠Warning

Towing a trailer is permitted only when a coupling ball bar is fitted correctly. If the coupling ball bar does not engage correctly, seek the assistance of a workshop.

Dismounting the detachable coupling ball bar

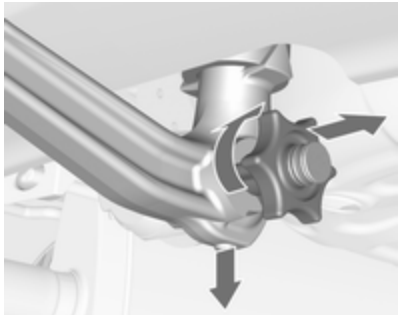

Open the protective flap and turn the key clockwise to unlock the coupling ball bar.

Pull out rotary handle and turn clockwise as far as it will go. Pull out coupling ball bar downwards.

Insert sealing plug in opening. Fold away socket.

Vehicle care

General Information **172**
Accessories and vehicle modifications 172
Vehicle storage 172
End-of-life vehicle recovery 172
Vehicle checks **173**
Performing work 173
Bonnet 173
Engine oil 174
Engine coolant 175
Power steering fluid 176
Washer fluid 176
Brakes 176
Brake fluid 176
Vehicle battery 177
Diesel fuel system bleeding 179
Wiper blade replacement 179
Bulb replacement **180**
Halogen headlights 180
Adaptive forward lighting 182
Fog lights 184
Front turn signal lights 184
Tail lights 185
Side turn signal lights 188
Number plate light 188
Interior lights 189
Instrument panel illumination ... 189
Electrical system **189**
Fuses 189
Engine compartment fuse box . 191
Instrument panel fuse box 193
Load compartment fuse box 194
Vehicle tools **195**
Tools 195
Wheels and tyres **196**
Winter tyres 196
Tyre designations 196
Tyre pressure 197
Tyre pressure monitoring system 198
Tread depth 201
Changing tyre and wheel size . 201
Wheel covers 202
Tyre chains 202
Tyre repair kit 202
Wheel changing 207
Spare wheel 210
Jump starting **213**
Towing **214**
Towing the vehicle 214
Towing another vehicle 215
Appearance care **216**
Exterior care 216
Interior care 218

General Information

Accessories and vehicle modifications

We recommend the use of genuine parts and accessories and factory approved parts specific for your vehicle type. We cannot assess or guarantee reliability of other products - even if they have a regulatory or otherwise granted approval.

Do not make any modifications to the electrical system, e.g. changes of electronic control units (chip tuning).

Caution
When transporting the vehicle on a train or on a recovery vehicle, the mud flaps might be damaged.

Vehicle storage

Storage for a long period of time

If the vehicle is to be stored for several months:

- Wash and wax the vehicle.
- Have the wax in the engine compartment and underbody checked.
- Clean and preserve the rubber seals.
- Fill up fuel tank completely.
- Change the engine oil.
- Drain the washer fluid reservoir.
- Check the coolant antifreeze and corrosion protection.
- Adjust tyre pressure to the value specified for full load.
- Park the vehicle in a dry, well ventilated place. Engage first or reverse gear or set selector lever to **P**. Prevent the vehicle from rolling.
- Do not apply the parking brake.
- Open the bonnet, close all doors and lock the vehicle.
- Disconnect the clamp from the negative terminal of the vehicle battery. Beware that all systems are not functional, e.g. anti-theft alarm system.

Putting back into operation

When the vehicle is to be put back into operation:

- Connect the clamp to the negative terminal of the vehicle battery. Activate the electronics of the power windows.
- Check tyre pressure.
- Fill up the washer fluid reservoir.
- Check the engine oil level.
- Check the coolant level.
- Fit the number plate if necessary.

End-of-life vehicle recovery

Information on end-of-life vehicle recovery centres and the recycling of end-of-life vehicles is available on our website. Only entrust this work to an authorised recycling centre.

Gas vehicles must be recycled by a service centre authorised for gas vehicles.

Vehicle checks

Performing work

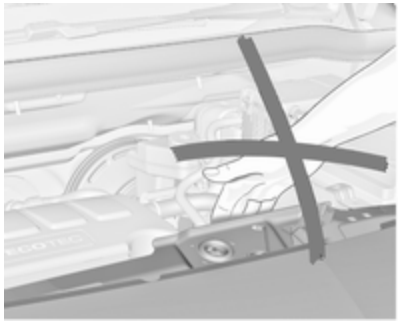

⚠ Warning

Only perform engine compartment checks when the ignition is off.

The cooling fan may start operating even if the ignition is off.

⚠ Danger

The ignition system uses extremely high voltage. Do not touch.

Bonnet

Opening

Pull the release lever and return it to its original position.

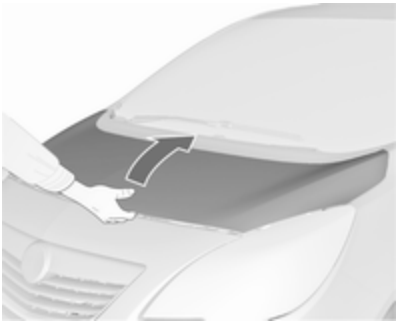

Press the safety catch and open the bonnet.

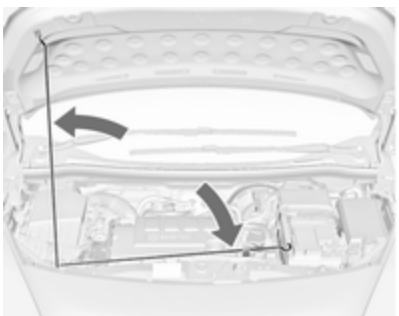

Secure the bonnet support.

If the bonnet is opened during an Autostop, the engine will be restarted automatically for safety reasons.

Closing

Before closing the bonnet, press the support into the holder.

Lower the bonnet and allow it to fall into the latch from a low height (20-25 cm). Check that the bonnet is engaged.

Caution
Do not press the bonnet into the latch, to avoid dents.

Engine oil

Check the engine oil level manually on a regular basis to prevent damage to the engine.

Ensure that the correct specification of oil is used. Recommended fluids and lubricants ⇨ 221.

The maximum engine oil consumption is 0.6 l per 1000 km.

Check with the vehicle on a level surface. The engine must be at operating temperature and switched off for at least five minutes.

Pull out the dipstick, wipe it clean, insert it to the stop on the handle, pull out and read the engine oil level.

Insert dipstick to the stop on the handle and make half a turn.

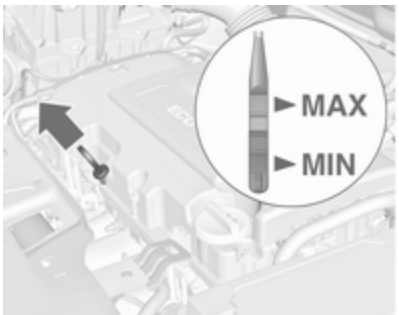

Different dipsticks are used depending on engine variant.

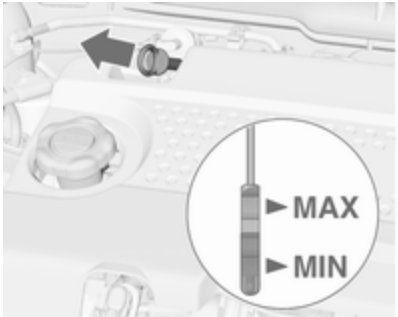

When the engine oil level has dropped to the **MIN** mark, top up engine oil.

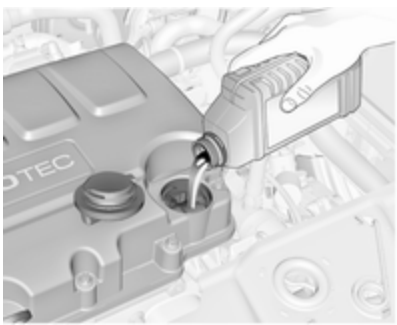

We recommend the use of the same grade of engine oil that was used at last change.

The engine oil level must not exceed the **MAX** mark on the dipstick.

Caution
Overfilled engine oil must be drained or suctioned out.

Capacities ⇨ 234.

Fit the cap on straight and tighten it.

Engine coolant

The coolant provides freeze protection down to approx. -28 °C.

Caution
Only use approved antifreeze.

Coolant level

Caution
Too low a coolant level can cause engine damage.

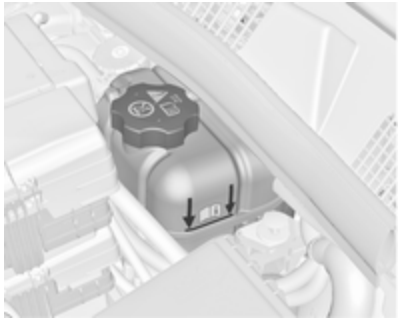

If the cooling system is cold, the coolant level should be above the filling line mark. Top up if the level is low.

⚠ Warning
Allow the engine to cool before opening the cap. Carefully open the cap, relieving the pressure slowly.

To top up use a 1:1 mixture of approved coolant concentrate mixed with clean tap water. If no coolant concentrate is available, use clean tap water. Install the cap tightly. Have

the coolant concentration checked and have the cause of the coolant loss remedied by a workshop.

Power steering fluid

Caution

Extremely small amounts of contamination can cause steering system damage and cause it to not work properly. Do not allow contaminates to contact the fluid side of the reservoir cap/dipstick or from entering the reservoir.

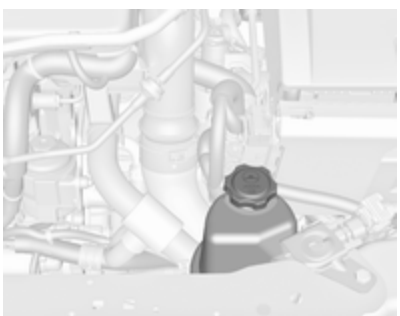

Power steering fluid level normally must not be checked. If an unusual noise sounds during steering or the power steering reacts conspicuous seek the assistance of a workshop.

Washer fluid

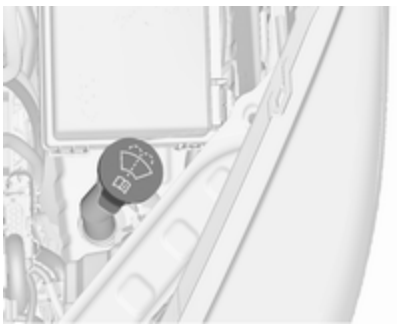

Fill with clean water mixed with a suitable quantity of approved windscreen washer fluid which contains antifreeze.

Caution

Only washer fluid with a sufficient antifreeze concentration provides protection at low temperatures or a sudden drop in temperature.

Brakes

In the event of minimum thickness of the brake lining, a squealing noise sounds during braking.

Continued driving is possible but have the brake lining replaced as soon as possible.

Once new brake linings are installed, do not brake unnecessarily hard for the first few journeys.

Brake fluid

⚠Warning

Brake fluid is poisonous and corrosive. Avoid contact with eyes, skin, fabrics and painted surfaces.

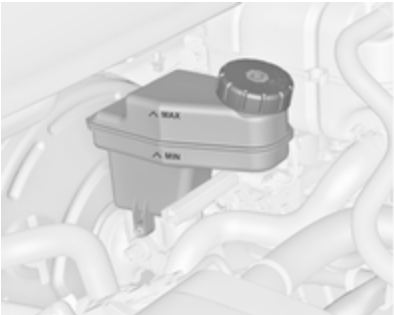

The brake fluid level must be between the **MIN** and the **MAX** marks.

When topping up, ensure maximum cleanliness as contamination of the brake fluid can lead to brake system malfunctions. Have the cause of the loss of brake fluid remedied by a workshop.

Only use high-performance brake fluid approved for the vehicle.

Brake and clutch fluid ⇨ 221.

Vehicle battery

The vehicle battery is maintenance-free provided that the driving profile allows sufficient charging of the battery. Short-distance-driving and frequent engine starts can discharge the battery. Avoid the use of unnecessary electrical consumers.

Batteries do not belong in household waste. They must be disposed of at an appropriate recycling collection point.

Laying up the vehicle for more than four weeks can lead to battery discharge. Disconnect the clamp from the negative terminal of the vehicle battery.

Ensure the ignition is switched off before connecting or disconnecting the vehicle battery.

Vehicle battery discharge protection ⇨ 128.

Replacing the vehicle battery

Note
Any deviation from the instructions given in this paragraph may lead to a temporary deactivation of the stop-start system.

When the vehicle battery is being replaced, please ensure that there are no open ventilation holes in the vicinity of the positive terminal. If a ventilation hole is open in this area, it must be closed off with a dummy cap, and the ventilation in the vicinity of the negative terminal must be opened.

Only use vehicle batteries that allow the fuse box to be mounted above the vehicle battery.

In vehicles with an AGM (Absorptive Glass Mat) battery, make sure to have the battery replaced with another AGM battery.

An AGM battery can be identified by the label on the battery. We recommend the use of an original Opel vehicle battery.

Note
Using an AGM vehicle battery different from the original Opel vehicle battery may result in a lower performance.

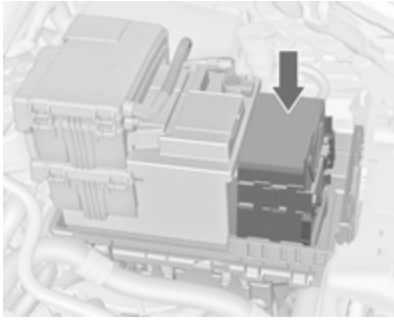

⚠Warning

When fitting a battery with a length deviating from the original one, it is essential to ensure a proper fitting of the buffer element.

We recommend that you have the vehicle battery replaced by a workshop.

Stop-start system ⇨ 142.

Charging the vehicle battery

⚠Warning

On vehicles with stop-start system, ensure that the charging potential does not exceed 14.6 volts when using a battery charger. Otherwise the vehicle battery might be damaged.

Jump starting ⇨ 213.

Warning label

Meaning of symbols:

- No sparks, naked flames or smoking.
- Always shield eyes. Explosive gases can cause blindness or injury.
- Keep the vehicle battery out of reach of children.
- The vehicle battery contains sulphuric acid which could cause blindness or serious burn injuries.
- See the Owner's Manual for further information.
- Explosive gas may be present in the vicinity of the vehicle battery.

Diesel fuel system bleeding

If the tank has been run dry, the diesel fuel system must be bled. Switch on the ignition three times for 15 seconds at a time. Then crank the engine for a maximum of 40 seconds. Repeat this process after no less than 5 seconds. If the engine fails to start, seek the assistance of a workshop.

Wiper blade replacement

Wiper blades on the windscreen

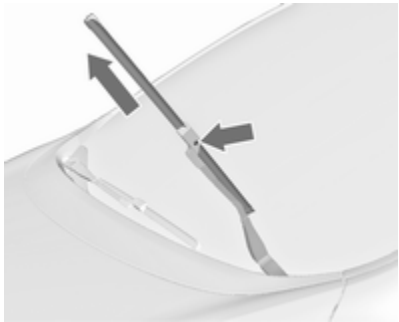

Lift the wiper arm, press button to disengage the wiper blade and remove.

Attach the wiper blade slightly angled to the wiper arm and push until it engages.

Lower wiper arm carefully.

Wiper blade on the rear window

Lift wiper arm. Disengage wiper blade as shown in illustration and remove.

Attach the wiper blade slightly angled to the wiper arm and push until it engages.

Lower wiper arm carefully.

Bulb replacement

Switch off the ignition and switch off the relevant switch or close the doors.

Only hold a new bulb at the base. Do not touch the bulb glass with bare hands.

Use only the same bulb type for replacement.

Replace headlight bulbs from within the engine compartment.

Halogen headlights

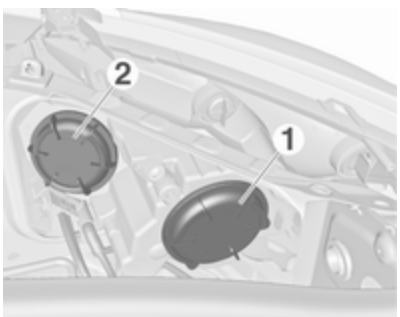

Headlights have separate systems for low beam **1** (outer bulbs) and high beam **2** (inner bulbs).

Low beam

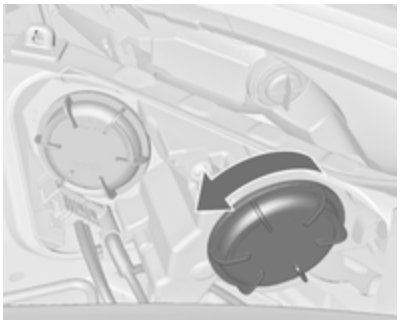

1. Rotate the cap **1** anticlockwise and remove it.

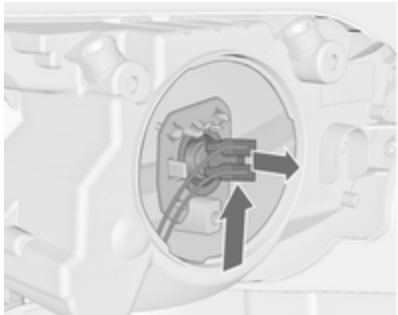

2. Push the bulb holder upwards and withdraw the bulb holder from the reflector.

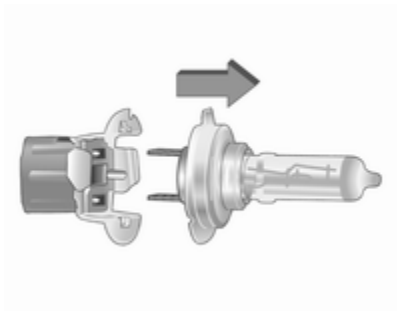

3. Detach the bulb from the bulb holder and replace the bulb.

4. Insert the bulb holder into the reflector.
5. Fit the cap and rotate clockwise.

High beam

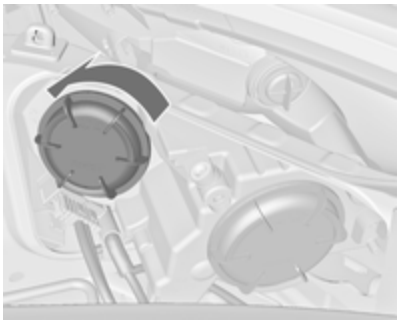

1. Rotate the cap **2** anticlockwise and remove it.
2. Detach the plug from the bulb.

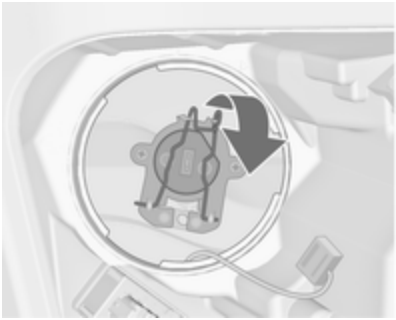

3. Disengage the spring clip and then swivel it backwards.

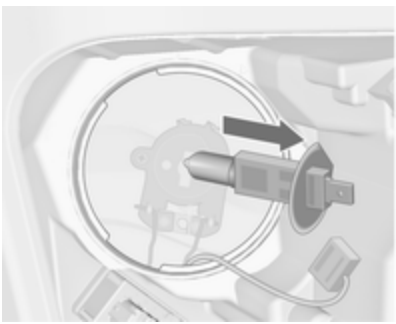

4. Remove and replace the bulb.
5. Swivel the spring clip forwards and engage.
6. Attach the plug to the bulb.
7. Fit the cap and rotate clockwise.

Sidelight/Daytime running light

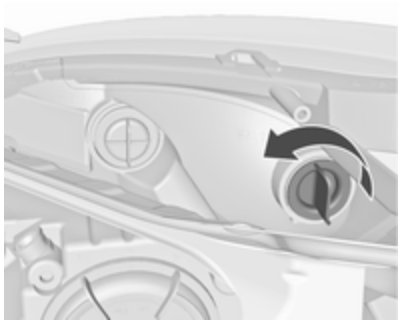

1. Rotate the bulb holder anticlockwise and remove it.

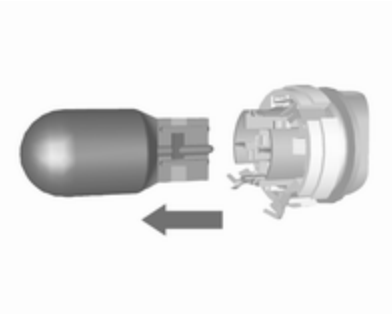

2. Detach bulb from the bulb holder and replace it.
3. Insert the bulb holder into the reflector and rotate clockwise.

Sidelight/Daytime running light with LEDs

On another version sidelight and daytime running lights are designed as LEDs. In case of defective have LEDs replaced by a workshop.

Adaptive forward lighting

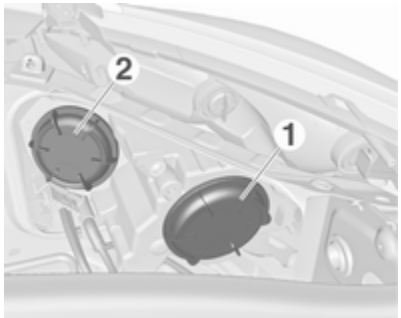

Headlights have separate systems for low beam and high beam **1** (outer bulbs) and cornering light **2** (inner bulbs).

Low beam/High beam

1. Rotate the cap **1** anticlockwise and remove it.

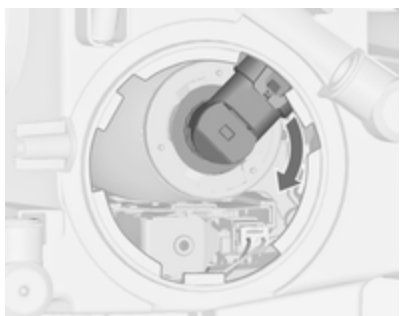

2. Rotate the bulb holder clockwise to disengage. Withdraw the bulb holder from the reflector.

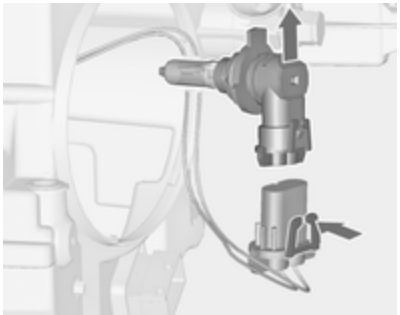

3. Disengage the bulb holder from the plug connector by pressing the retaining lug.
4. Replace the bulb and connect bulb holder with the plug connector.
5. Insert the bulb holder, engaging the two lugs into the reflector and rotate anticlockwise to secure.
6. Fit the cap and rotate clockwise.

Cornering light

1. Rotate protective cover **2** anticlockwise and remove.

2. Rotate the bulb holder anticlockwise to disengage. Withdraw the bulb holder from the reflector.

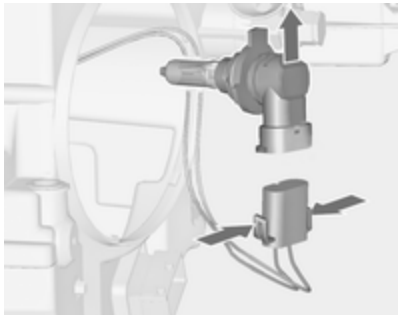

3. Disengage the bulb holder from the plug connector by pressing the retaining lugs.
4. Replace the bulb and connect bulb holder with the plug connector.
5. Insert the bulb holder, engaging the two lugs into the reflector and rotate clockwise to secure.
6. Fit the cap and rotate clockwise.

Sidelight/Daytime running light

Sidelight and daytime running lights are designed as LEDs. In case of failure, have LEDs replaced by a workshop.

Fog lights

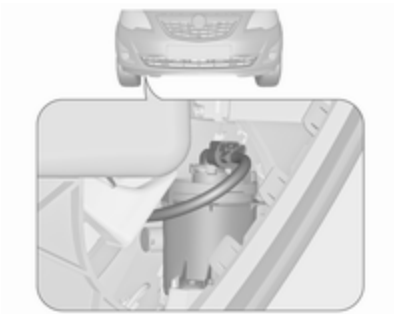

The bulbs are accessible from the underside of the vehicle.

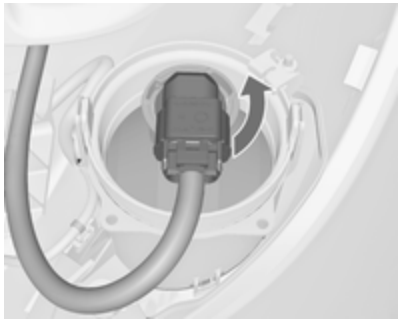

1. Turn the bulb holder anticlockwise and remove it from the reflector.

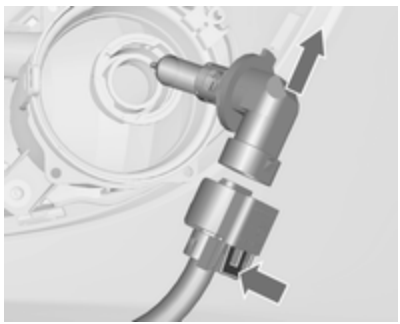

2. Disengage the bulb holder from the plug connector by pressing the retaining lug.
3. Remove and replace the bulb holder with bulb.
4. Attach the plug connector.
5. Insert the bulb holder into the reflector.
6. Turn the bulb holder clockwise and engage.

Front turn signal lights

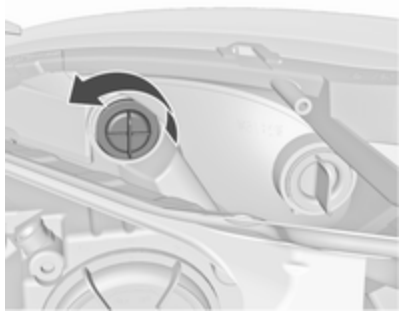

1. Rotate the bulb holder anticlockwise and remove it.

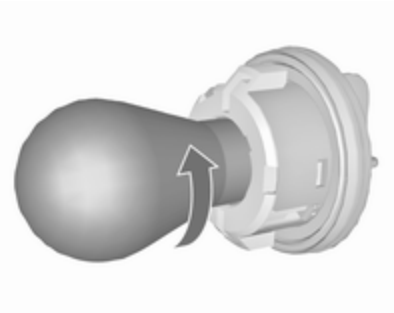

2. Rotate bulb anticlockwise and remove from bulb holder.
3. Replace bulb.
4. Insert the bulb holder into the reflector and rotate clockwise.

Tail lights

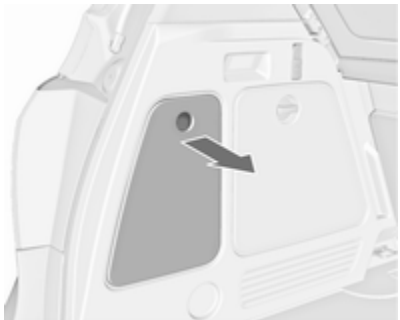

1. Release the cover and remove it.

2. Unscrew the two plastic securing nuts from the inside by hand.

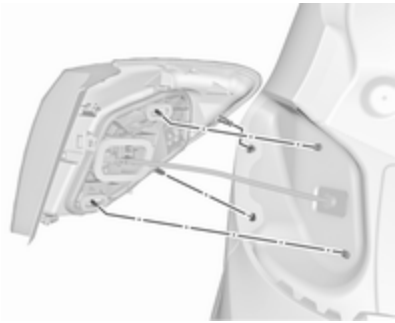

3. Carefully withdraw the light assembly from retaining pins and remove. Make sure that the cable duct remains in position.
4. Detach the wiring plug from the bulb carrier.

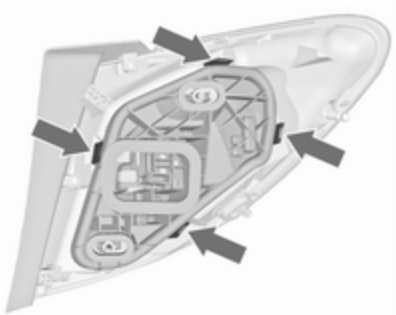

5. Unlatch the four retaining lugs and remove the bulb carrier.

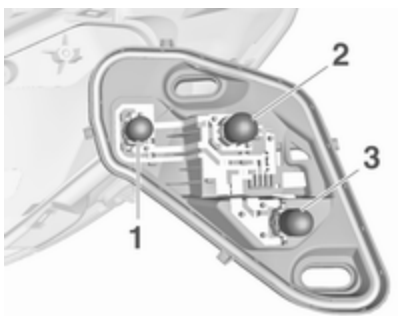

6. Remove and replace the bulb.

   Tail light and brake light (**1**)

   Tail light (**2**)

   Turn signal light (**3**)

   Version with Light Emitting Diode (LED):

   Only brake light (**1**) and turn signal light (**2**) can be changed.

7. Insert the bulb carrier into the tail light assembly. Connect the wiring plug. Fit light assembly onto retaining pins and tighten the securing nuts. Close the cover and engage.
8. Switch on the ignition, operate and check all lights.

Tail lights in the tailgate frame

1. Open the tailgate and remove the cover with a screwdriver.

2. Press the retaining lug and remove the bulb carrier downwards.

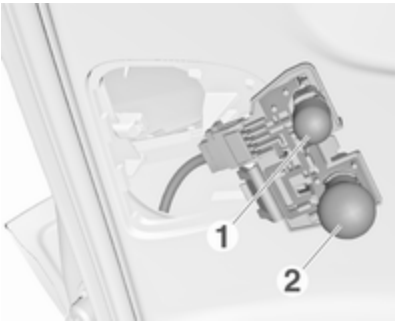

3. To replace the reverse light bulb (**1**), remove and replace the bulb.

   To replace the tail light/rear fog light bulb (**2**), push the bulb slightly into the socket, rotate anticlockwise, remove and replace the bulb.
4. Insert the bulb carrier into the retainer.
5. Attach the cover.
6. Switch on the ignition, operate and check all lights.

For replacing the tail light bulb and reverse light bulb on the right side of the tailgate frame, proceed in the same way.

Version with Light Emitting Diode (LED):

Only the reverse light bulb can be changed.

1. Open the tailgate and remove the cover with a screwdriver.

2. Rotate the bulb holder anticlockwise to disengage. Withdraw the bulb holder.
3. To replace the reverse light bulb, push the bulb slightly into the socket, rotate anticlockwise, remove and replace the bulb.
4. Insert bulb holder and turn clockwise.
5. Attach the cover.

Side turn signal lights

To replace bulb, remove lamp housing:

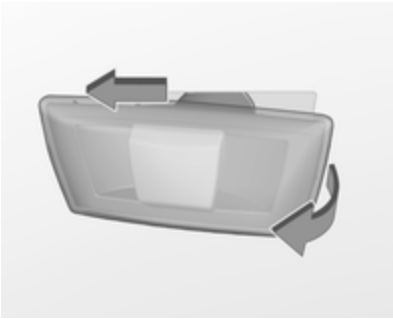

1. On left vehicle side, slide lamp to the front and remove it out of the front wing with the rear end.

   On right vehicle side, slide lamp to the rear and remove it out of the front wing with the front end.

2. Turn bulb holder anticlockwise and remove from housing.

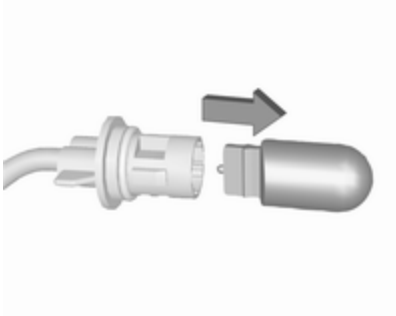

3. Pull bulb from bulb holder and replace it.
4. Insert bulb holder and turn clockwise.
5. On left side: insert front end into front wing, slide forward and insert rear end.

   On right side: insert rear end into front wing, slide rearward and insert front end.

Number plate light

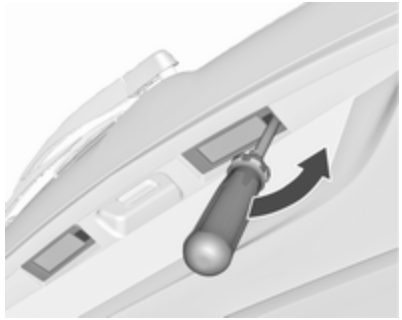

1. Insert screwdriver in recess of the cover, press to the side and release spring.

2. Remove lamp downwards, taking care not to pull on the cable.

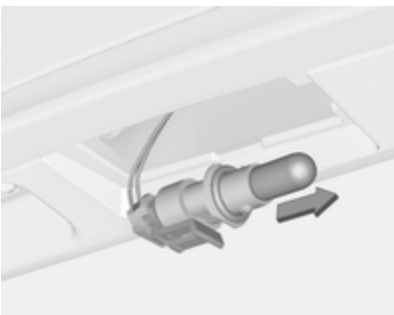

3. Remove bulb holder from lamp housing by turning anticlockwise.
4. Pull bulb from bulb holder and replace it.
5. Insert bulb holder into lamp housing and turn clockwise.
6. Insert lamp into bumper and let engage.

Interior lights

Courtesy light, reading lights

Have bulbs replaced by a workshop.

Load compartment light

Have bulbs replaced by a workshop.

Instrument panel illumination

Have bulbs replaced by a workshop.

Electrical system

Fuses

Data on the replacement fuse must match the data on the defective fuse.

There are three fuse boxes in the vehicle:

- in the front left of the engine compartment
- in left-hand drive vehicles, in the interior behind the storage compartment, or, in right-hand drive vehicles, behind the glovebox
- behind a cover on the left side of the load compartment

Before replacing a fuse, turn off the respective switch and the ignition.

A blown fuse can be recognized by its melted wire. Do not replace the fuse until the cause of the fault has been remedied.

Some functions are protected by several fuses.

Fuses may also be inserted without existence of a function.

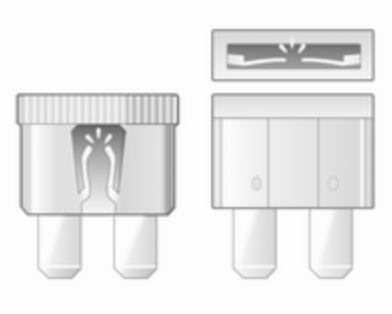

Fuse extractor

A fuse extractor may be located in the fuse box in the engine compartment.

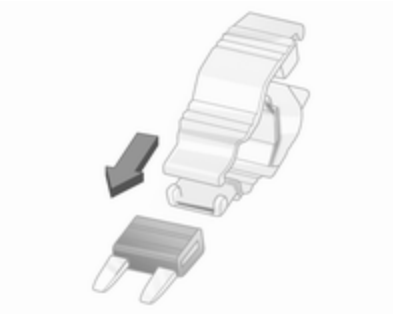

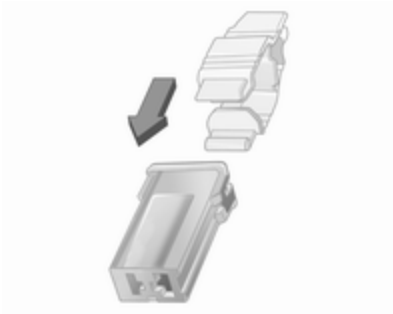

Place the fuse extractor on the various types of fuse from the top or side, and withdraw fuse.

Engine compartment fuse box

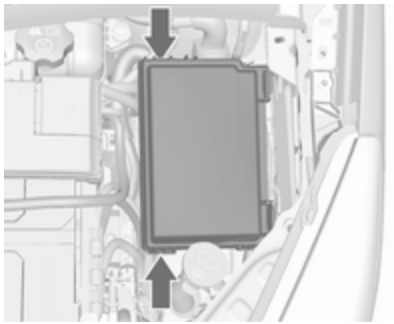

The fuse box is in the front left of the engine compartment.

Disengage the cover, lift it upwards and remove.

After having changed defective fuses close the fuse box cover and press until it engages.

If the fuse box cover is not closed correctly, malfunctions may occur.

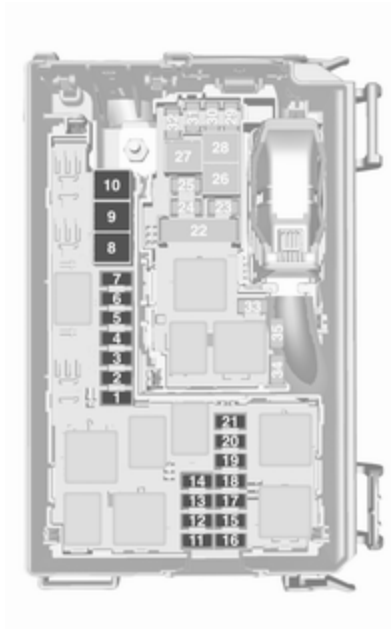

No.	Circuit
1	Starter
2	–
3	Fuel filter/Cooling
4	Horn
5	Terminal 30
6	Engine control module/Transmission control unit
7	Fog light
8	Engine cooling
9	Engine cooling
10	Vacuum pump
11	Ignition/Preheating
12	Headlamp levelling
13	Air conditioning system/ Terminal 15
14	Transmission control unit
15	High beam right
16	High beam left

No.	Circuit
17	Engine control module
18	Engine control module/ Terminal 15
19	Airbag
20	Engine control module
21	Engine control module/ Terminal 87

No.	Circuit
22	Electrical parking brake
23	Tyre repair kit
24	Fuel pump
25	ABS
26	Heated rear window
27	ABS
28	Interior fan
29	Cigarette lighter
30	Air conditioning system
31	Front power window, left
32	Front power window, right
33	Mirror heating
34	ABS
35	Airbag

Instrument panel fuse box

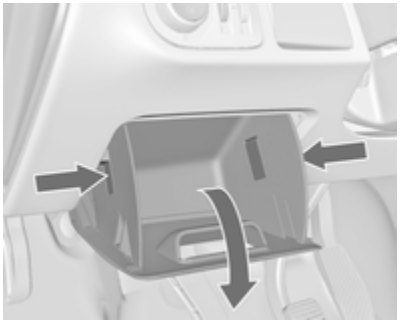

In left-hand drive vehicles, the fuse box is behind the storage compartment in the instrument panel.

Open compartment, compress the locking tabs, fold compartment down and remove.

In right-hand drive vehicles, the fuse box is located behind a cover in the glovebox. Open the glovebox, pull cover upwards and remove.

No.	Circuit
1	Radio
2	Display/Instrument/Telephone
3	Radio
4	Ignition switch/Immobiliser
5	Windscreen washer/Rear screen washer
6	Central locking system/Tailgate
7	Central locking system
8	Display/Instrument/Telephone
9	Heated steering wheel
10	Rear left door unlocking
11	Rear right door unlocking
12	Courtesy light
13	Rain sensor/Interior mirror/ Exterior mirrors
14	–

Load compartment fuse box

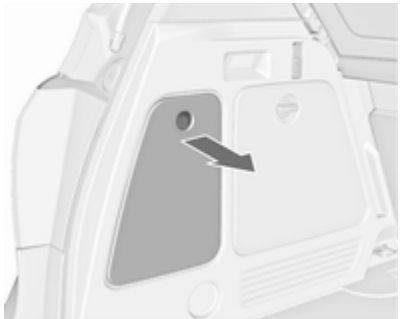

The fuse box is on the left side of the load compartment behind a cover. Remove the cover.

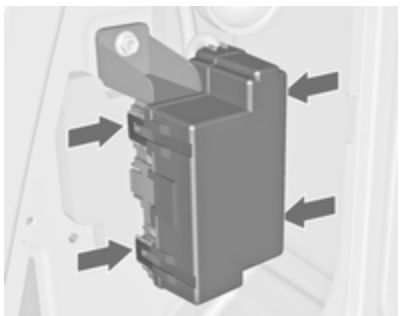

Disengage the four retaining lugs and remove the cover.

No.	Circuit
1	Adaptive forward lighting
2	–
3	–
4	–
5	–
6	Right rear power window
7	Adaptive forward lighting
8	Trailer module/Trailer socket
9	Left seat lumbar support
10	Left rear power window
11	Park assist
12	Electrical sunblind
13	–
14	Heated front seats
15	Trailer module
16	Right seat lumbar support
17	–

Vehicle tools

Tools

To open the compartment, disengage the cover and open it, or, depending on the version, lift the floor cover.

Vehicles with tyre repair kit

Variant 1: The vehicle tools are in the right-hand compartment in the load compartment, together with the tyre repair kit.

Variant 2: The vehicle tools are in the compartment under the floor cover in the load compartment, together with the tyre repair kit.

Vehicles with spare wheel

The jack and the vehicle tools are in the spare wheel well in the load compartment.

Wheels and tyres

Tyre condition, wheel condition

Drive over edges slowly and at right angles if possible. Driving over sharp edges can cause tyre and wheel damage. Do not trap tyres on the kerb when parking.

Regularly check the wheels for damage. Seek the assistance of a workshop in the event of damage or unusual wear.

Winter tyres

Winter tyres improve driving safety at temperatures below 7 °C and should therefore be fitted on all wheels.

In accordance with country-specific regulations, affix the speed sticker in the driver's field of view.

Tyre designations

E.g. **195/65 R 15 91 H**

195 : tyre width, mm
65 : cross-section ratio (tyre height to tyre width), %
R : belt type: Radial
RF : type: RunFlat
15 : wheel diameter, inches
91 : load index e.g. 91 is equivalent to 615 kg
H : speed code letter

Speed code letter:

Q : up to 160 km/h
S : up to 180 km/h
T : up to 190 km/h
H : up to 210 km/h
V : up to 240 km/h
W : up to 270 km/h

Choose a tyre appropiate for the maximum speed of your verhicle.

The maximum speed is achievable at kerb weight with driver (75 kg) plus 125 kg payload. Optional equipment could reduce the maximum speed of the vehicle.

Performance ⇨ 230.

Directional tyres

Directional tyres must be mounted so that they rotate in the correct direction. The proper rotation direction is indicated by a symbol (e.g. an arrow) on the sidewall.

Tyre pressure

Check the pressure of cold tyres at least every 14 days and before any long journey. Do not forget the spare wheel. This also applies to vehicles with tyre pressure monitoring system.

Unscrew the valve cap.

Tyre pressure ⇨ 235.

The tyre pressure information label on the right door frame indicates the original equipment tyres and the correspondent tyre pressures.

The tyre pressure data refers to cold tyres. It applies to summer and winter tyres.

Always inflate the spare tyre to the pressure specified for full load.

The ECO tyre pressure serves to achieve the smallest amount of fuel consumption possible.

Incorrect tyre pressures will impair safety, vehicle handling, comfort and fuel economy and will increase tyre wear.

Tyre pressures differ depending on various options. For the correct tyre pressure value, follow the procedure below:

1. Identify the engine identifier code. Engine data ⇨ 228.
2. Identify the respective tyre.

The tyre pressure tables show all possible tyre combinations ⇨ 235.

For the tyres approved for your vehicle, refer to the EEC Certificate of Conformity provided with your vehicle or other national registration documents.

The driver is responsible for correct adjustment of tyre pressure.

⚠ Warning

If the pressure is too low, this can result in considerable tyre warm-up and internal damage, leading to tread separation and even to tyre blow-out at high speeds.

If the tyre pressure must be reduced or increased on a vehicle with tyre pressure monitoring system, switch off ignition.

Temperature dependency

The tyre pressure depends on the temperature of the tyre. During driving, tyre temperature and pressure increase. Tyre pressure values provided on the tyre information label and tyre pressure chart are valid for cold tyres, which means at 20 °C.

The pressure increases by nearly 10 kPa for a 10 °C temperature increase. This must be considered when warm tyres are checked.

The tyre pressure value displayed in the Driver Information Centre shows the real tyre pressure. A cooled down tyre will show a decreased value, which does not indicate an air leak.

Tyre pressure monitoring system

The tyre pressure monitoring system checks the pressure of all four wheels once a minute when vehicle speed exceeds a certain limit.

Caution
Tyre pressure monitoring system warns only about low tyre pressure condition and does not replace regular tyre maintenance by the driver.

All wheels must be equipped with pressure sensors and the tyres must have the prescribed pressure.

Note
In countries where the tyre pressure monitoring system is legally required, the use of wheels without pressure sensors will invalidate the vehicle type approval.

The current tyre pressures can be shown in the **Vehicle Information Menu** in the Driver Information Centre.

The menu can be selected by the buttons on the turn signal lever.

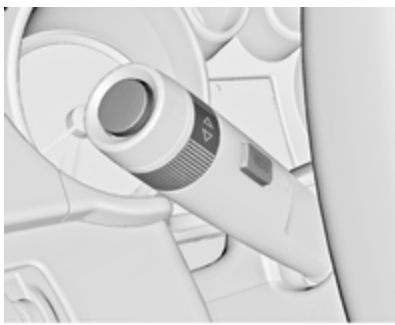

Press **MENU** to select the **Vehicle Information Menu** .

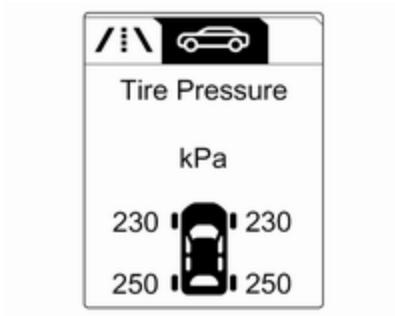

Turn the adjuster wheel to select the tyre pressure monitoring system.

System status and pressure warnings are displayed by a message indicating the corresponding tyre in the Driver Information Centre.

The system considers the tyre temperature for the warnings.

Temperature dependency ⇨ 197.

A detected low tyre pressure condition is indicated by the control indicator (!) ⇨ 98.

If (!) illuminates, stop as soon as possible and inflate the tyres as recommended ⇨ 235.

If (!) flashes for 60-90 seconds and then illuminates continuously, there is a fault in the system. Consult a workshop.

After inflating, driving may be required to update the tyre pressure values in the Driver Information Centre. During this time (!) may illuminate.

If (!) illuminates at lower temperatures and extinguishes after some driving, this could be an indicator for approaching a low tyre pressure condition. Check tyre pressure.

Vehicle messages ⇨ 106.

If the tyre pressure shall be reduced or increased, switch off ignition.

Only mount wheels with pressure sensors, otherwise the tyre pressure will not be displayed and (!) illuminates continuously.

A temporary spare wheel is not equipped with pressure sensors. The tyre pressure monitoring system is not operational for these wheels. Control indicator (!) illuminates. For the further three wheels the system remains operational.

The use of commercially available liquid tyre repair kits can impair the function of the system. Factory-approved repair kits can be used.

Operating electronic devices or being close to facilities using similar wave frequencies could disrupt the tyre pressure monitoring system.

Each time the tyres are replaced tyre pressure monitoring system sensors must be dismounted and serviced. For the screwed sensor: replace valve core and sealing ring. For clipped sensor: replace complete valve stem.

Vehicle loading status

Adjust tyre pressure to load condition according to tyre information label or tyre pressure chart ⇨ 235, and select the relevant setting in the menu **Tyre Load** in the Driver Information Centre, **Vehicle Information Menu** ⇨ 101. This setting is the reference for the tyre pressure warnings.

The **Tyre Load** menu only appears if the vehicle is in a standstill and the parking brake is applied. On vehicles with automatic transmission the selector lever has to be in **P**.

Select:

- **Light** for comfort pressure up to 3 people.
- **Eco** for Eco pressure up to 3 people.
- **Max** for full loading.

Tyre pressure sensor matching process

Each tyre pressure sensor has a unique identification code. The identification code must be matched to a new wheel position after rotating the wheels or exchanging the complete wheel set and if one or more tyre pressure sensors were replaced.

The tyre pressure sensor matching process should also be performed after replacing a spare wheel with a road wheel containing the tyre pressure sensor.

The malfunction light (!) and the warning message or code should go off at the next ignition cycle. The sensors are matched to the wheel positions, using a relearn tool, in the following order: left side front wheel, right side front wheel, right side rear wheel and left side rear wheel. The turn signal light at the current active position is illuminated until sensor is matched.

Consult a workshop for service or purchase a relearn tool. There are two minutes to match the first wheel position, and five minutes overall to match all four wheel positions. If it takes longer, the matching process stops and must be restarted.

The tyre pressure sensor matching process is:

1. Apply the parking brake.
2. Turn the ignition on.
3. On vehicles with automatic transmission: set the selector lever to **P**.

   On vehicles with manual transmission: select neutral.
4. Press **MENU** on the turn signal lever to select the **Vehicle Information Menu** in the Driver Information Centre.
5. Turn the adjuster wheel to scroll to the tyre pressure menu.
6. Press **SET/CLR** to begin the sensor matching process. A message requesting acceptance of the process should display.
7. Press **SET/CLR** again to confirm the selection. The horn sounds twice to signal the receiver is in relearn mode.
8. Start with the left side front wheel.
9. Place the relearn tool against the tyre sidewall, near the valve stem. Then press the button to activate the tyre pressure sensor. A horn chirp and the brief activation of all turn signal lights confirm that the

sensor identification code has been matched to this wheel position.

10. Proceed to the right side front wheel, and repeat the procedure in Step 9.
11. Proceed to the right side rear wheel, and repeat the procedure in Step 9.
12. Proceed to the left side rear wheel, and repeat the procedure in Step 9. The horn sounds twice to ind

    icate the sensor identification code has been matched to the left side rear wheel, and the tyre pressure sensor matching process is no longer active.
13. Turn off the ignition.
14. Set all four tyres to the recommended air pressure level as indicated on the tyre pressure information label.
15. Ensure the tyre loading status is set according selected pressure ⇨ 101.

Tread depth

Check tread depth at regular intervals.

Tyres should be replaced for safety reasons at a tread depth of 2-3 mm (4 mm for winter tyres).

For safety reasons it is recommended that the tread depth of the tyres on one axle should not vary by more than 2 mm.

The legally permissible minimum tread depth (1.6 mm) has been reached when the tread has worn down as far as one of the tread wear indicators (TWI). Their position is indicated by markings on the sidewall.

If there is more wear at the front than the rear, swap round front wheels and rear wheels periodically. Ensure that the direction of rotation of the wheels remains the same.

Tyres age, even if they are not used. We recommend tyre replacement every 6 years.

Changing tyre and wheel size

If tyres of a different size than those fitted at the factory are used, it may be necessary to reprogramme the speedometer as well as the nominal tyre pressure and make other vehicle modifications.

After converting to a different tyre size, have the label with tyre pressures replaced.

⚠Warning

Use of unsuitable tyres or wheels may lead to accidents and will invalidate the vehicle type approval.

Wheel covers

Wheel covers and tyres that are factory approved for the respective vehicle and comply with all of the relevant wheel and tyre combination requirements must be used.

If the wheel covers and tyres used are not factory approved, the tyres must not have a rim protection ridge.

Wheel covers must not impair brake cooling.

⚠Warning

Use of unsuitable tyres or wheel covers could lead to sudden pressure loss and thereby accidents.

Steel wheels: When using locking wheel bolts, do not attach wheel covers.

Tyre chains

Tyre chains are only permitted on the front wheels.

Always use fine mesh chains that add no more than 10 mm to the tyre tread and the inboard sides (including chain lock).

⚠Warning

Damage may lead to tyre blowout.

Tyre chains are only permitted on tyres of size 195/65 R15, 205/55 R16 and 225/45 R17.

Tyre chains are not permitted on tyres of size 225/40 R18.

The use of tyre chains is not permitted on the temporary spare wheel.

Tyre repair kit

Minor damage to the tyre tread can be repaired with the tyre repair kit.

Do not remove foreign bodies from the tyres.

Tyre damage exceeding 4 mm or that is at the tyre's sidewall near the rim cannot be repaired with the tyre repair kit.

⚠Warning

Do not drive faster than 80 km/h.

Do not use for a lengthy period.

Steering and handling may be affected.

If you have a flat tyre:

Apply the parking brake and engage first gear, reverse gear or **P**.

The tyre repair kit is stowed in the load compartment.

Depending on the equipment, the tyre repair kit is in a compartment in the right sidewall or in a compartment under the floor cover.

Vehicles with tyre repair kit in the sidewall

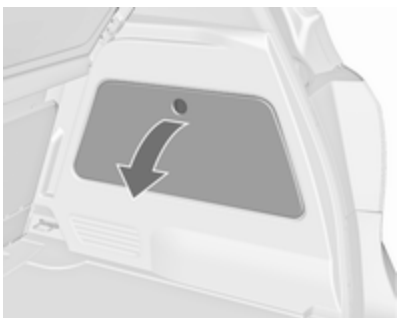

To open the compartment, disengage the cover and open it.

1. Take the sealant bottle and bracket with air hose from the insert.

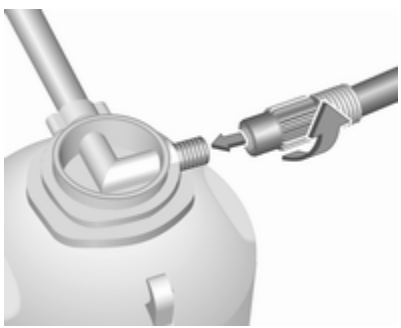

2. Detach air hose from bracket and screw onto sealant bottle connection.

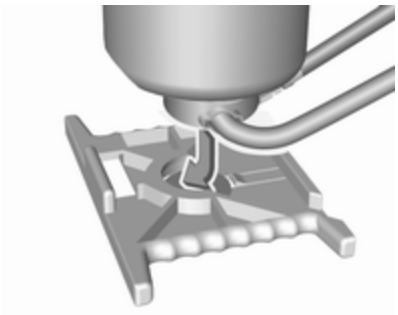

3. Position the sealant bottle on the bracket. Make sure that the bottle does not fall.

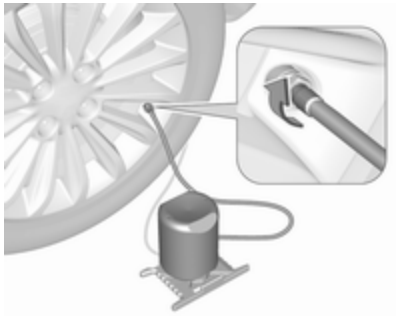

4. Unscrew valve cap from defective tyre.
5. Screw tyre inflation hose to valve.
6. Screw air hose onto compressor connection.
7. Switch on ignition.

   To avoid discharging the vehicle battery, we recommend running the engine.

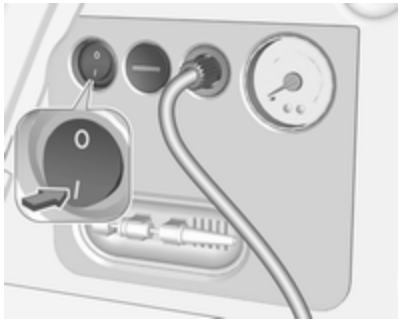

8. Press on/off switch on the compressor. The tyre is filled with sealant.
9. The compressor pressure gauge briefly indicates up to 6 bar whilst the sealant bottle is emptying (approx. 30 seconds). Then the pressure starts to drop.
10. All of the sealant is pumped into the tyre. Then the tyre is inflated.
11. The prescribed tyre pressure should be obtained within 10 minutes. Tyre pressure ⇨ 235. When the correct pressure is obtained, switch off the compressor by pressing the on/off switch again.

    If the prescribed tyre pressure is not obtained within 10 minutes, remove the tyre repair kit. Move the vehicle one tyre rotation. Reattach the tyre repair kit and continue the filling procedure for 10 minutes. If the prescribed tyre pressure is still not obtained, the tyre is too badly damaged. Seek the assistance of a workshop.

    Release excess tyre pressure by pressing ━.

    Do not run the compressor longer than 10 minutes.
12. Push catch on bracket to remove sealant bottle from bracket. Screw the tyre inflation hose to the free connection of the sealant bottle. This prevents sealant from escaping. Stow tyre repair kit in load compartment.
13. Remove any excess sealant using a cloth.
14. Take the label indicating maximum permitted speed from the sealant bottle and affix in the driver's field of view.

15. Continue driving immediately so that sealant is evenly distributed in the tyre. After driving approx. 10 km (but no more than 10 minutes), stop and check tyre pressure. Screw compressor air hose directly onto tyre valve and compressor when doing this.

    If tyre pressure is more than 1.3 bar, set it to the correct value. Repeat the procedure until there is no more loss of pressure.

    If the tyre pressure has fallen below 1.3 bar, the vehicle must not be used. Seek the assistance of a workshop.
16. Stow away tyre repair kit in load compartment.

Vehicles with tyre repair kit under the floor cover

1. Take the tyre repair kit from the compartment.
2. Remove the compressor.

3. Remove the electrical connection cable and air hose from the stowage compartments on the underside of the compressor.

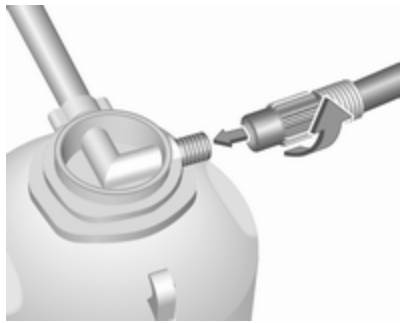

4. Screw the compressor air hose to the connection on the sealant bottle.
5. Fit the sealant bottle into the retainer on the compressor.

   Set the compressor near the tyre in such a way that the sealant bottle is upright.

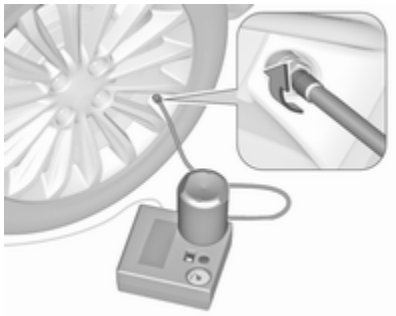

6. Unscrew valve cap from defective tyre.
7. Screw the filler hose to the tyre valve.
8. The switch on the compressor must be set to O.
9. Connect the compressor plug to the power outlet or cigarette lighter socket.

   To avoid discharging the battery, we recommend running the engine.

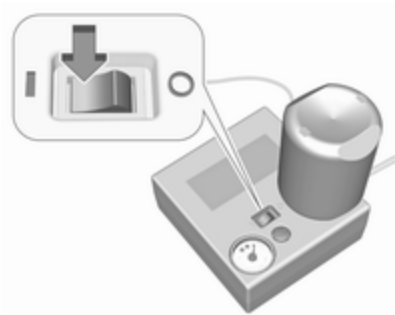

10. Set the rocker switch on the compressor to I. The tyre is filled with sealant.
11. The compressor pressure gauge briefly indicates up to 6 bar whilst the sealant bottle is emptying (approx. 30 seconds). Then the pressure starts to drop.
12. All of the sealant is pumped into the tyre. Then the tyre is inflated.
13. The prescribed tyre pressure should be obtained within 10 minutes. Tyre pressure ⇨ 235. When the correct pressure is obtained, switch off the compressor.

If the prescribed tyre pressure is not obtained within 10 minutes, remove the tyre repair kit. Move the vehicle one tyre rotation. Reattach the tyre repair kit and continue the filling procedure for 10 minutes. If the prescribed tyre pressure is still not obtained, the tyre is too badly damaged. Seek the assistance of a workshop.

Drain excess tyre pressure with the button over the pressure indicator.

Do not run the compressor longer than 10 minutes.

14. Detach the tyre repair kit. Push catch on bracket to remove sealant bottle from bracket. Screw the tyre inflation hose to the free connection of the sealant bottle. This prevents sealant from escaping. Stow tyre repair kit in load compartment.
15. Remove any excess sealant using a cloth.
16. Take the label indicating maximum permitted speed from the sealant bottle and affix in the driver's field of view.
17. Continue driving immediately so that sealant is evenly distributed in the tyre. After driving approx. 10 km (but no more than 10 minutes), stop and check tyre pressure. Screw compressor air hose directly onto tyre valve and compressor when doing this.

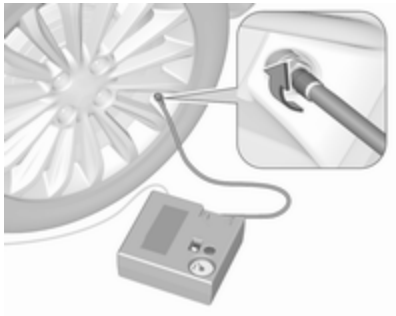

If tyre pressure is more than 1.3 bar, set it to the correct value. Repeat the procedure until there is no more loss of pressure.

If the tyre pressure has fallen below 1.3 bar, the vehicle must not be used. Seek the assistance of a workshop.

18. Stow away tyre repair kit in load compartment.

General information

Note
The driving characteristics of the repaired tyre are severely affected, therefore have this tyre replaced.

If unusual noise is heard or the compressor becomes hot, turn compressor off for at least 30 minutes.

The built-in safety valve opens at a pressure of 7 bar.

Note the expiry date of the kit. After this date its sealing capability is no longer guaranteed. Pay attention to storage information on sealant bottle.

Replace the used sealant bottle. Dispose of the bottle as prescribed by applicable laws.

The compressor and sealant can be used from approx. -30 °C.

The adapters supplied can be used to pump up other items e.g. footballs, air mattresses, inflatable dinghies etc. They are located on the underside of the compressor. To remove, screw on compressor air hose and withdraw adapter.

Wheel changing

Some vehicles are equipped with a tyre repair kit instead of a spare wheel ⇨ 202.

Make the following preparations and observe the following information:

- Park the vehicle on a level, firm and non-skid surface. The front wheels must be in the straight-ahead position.
- Apply the parking brake and engage first gear, reverse gear or **P**.
- Remove the spare wheel ⇨ 210.
- Never change more than one wheel at once.
- Use the jack only to change wheels in case of puncture, not for seasonal winter or summer tyre change.
- The jack is maintenance-free.
- If the ground on which the vehicle is standing is soft, a solid board (max. 1 cm thick) should be placed under the jack.
- Take heavy objects out of the vehicle before jacking up.
- No people or animals may be in the vehicle when it is jacked-up.
- Never crawl under a jacked-up vehicle.
- Do not start the vehicle when it is raised on the jack.
- Before screwing in the wheel bolts, clean them and lightly coat the taper of each wheel bolt with commercially available grease.

⚠ Warning

Do not grease the thread of the wheel bolt.

1. Pull off the wheel cover.

   For wheel covers with visible wheel bolts: The cover can remain on the wheel. Do not remove the retaining rings on the wheel bolts.

   Alloy wheels: Disengage wheel bolt caps with a screwdriver and remove. To protect the wheel, place a soft cloth between the screwdriver and the alloy wheel.

2. Variant 1:

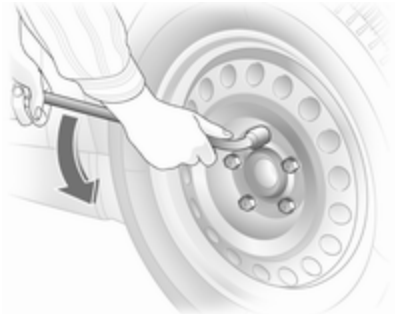

   Install the wheel wrench ensuring that it locates securely and loosen each wheel bolt by half a turn.

   Variant 2:

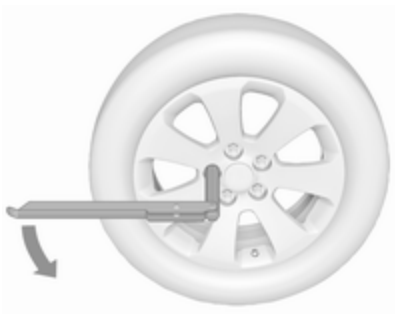

Fold out the wheel wrench and install ensuring that it locates securely and loosen each wheel bolt by half a turn.

The wheels might be protected by locking wheel bolts. To loosen these specific bolts first attach the adapter onto the head of the bolt before installing the wheel wrench. The adapter is located in the glovebox.

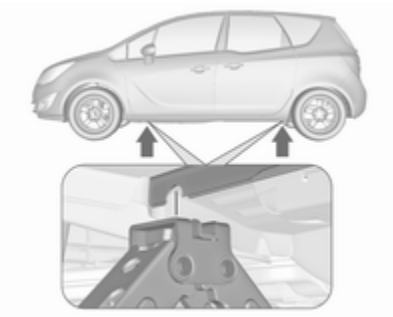

3. Ensure the jack is positioned correctly with the vehicle jacking points.

4. Variant 1:

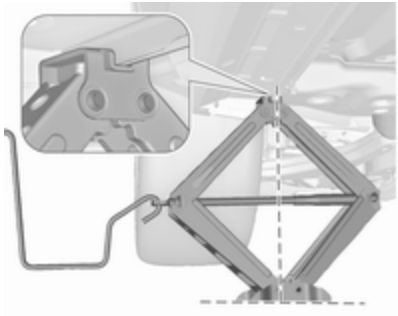

Set the jack to the necessary height. Position it directly below the jacking point in a manner that prevents it from slipping.

Attach jack handle and with the jack correctly aligned rotate handle until wheel is clear of the ground.

Variant 2:

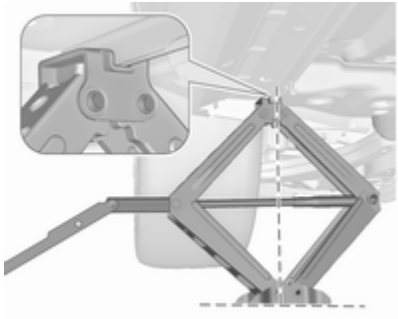

Set the jack to the necessary height. Position it directly below the jacking point in a manner that prevents it from slipping.

Attach wheel wrench and with the jack correctly aligned rotate wheel wrench until wheel is clear of the ground.

5. Unscrew the wheel bolts.
6. Change the wheel.
7. Screw on the wheel bolts.
8. Lower vehicle.
9. Install the wheel wrench ensuring that it locates securely and tighten each bolt in a crosswise sequence. Tightening torque is 110 Nm.
10. Align the valve hole in the wheel cover with the tyre valve before installing.

    Install wheel bolt caps.
11. Stow the replaced wheel ⇨ 210, the vehicle tools ⇨ 195 and the adapter for the locking wheel bolts ⇨ 61.
12. Check the tyre pressure of the installed tyre and also the wheel bolt torque as soon as possible.

Have the defective tyre renewed or repaired.

Jacking position for lifting platform

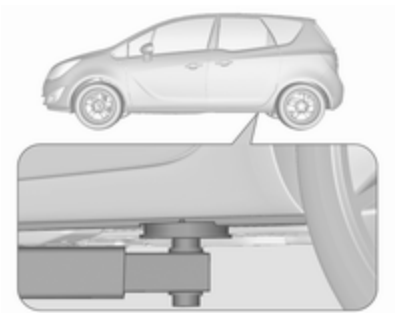

Rear arm position of the lifting platform at the underbody.

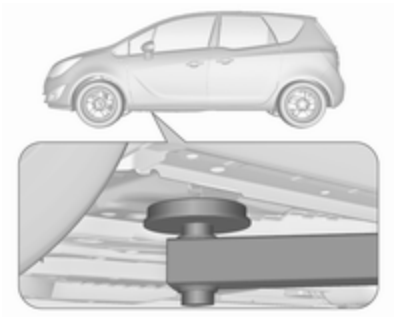

Front arm position of the lifting platform at the underbody.

Spare wheel

Some vehicles are equipped with a tyre repair kit instead of a spare wheel.

If mounting a spare wheel, which is different from the other wheels, this wheel might be classified as a temporary spare wheel and the corresponding speed limits apply, even though no label indicates this. Seek the assistance of a workshop to check the applicable speed limit.

The spare wheel has a steel rim.

The use of a spare wheel that is smaller than the other wheels or in combination with winter tyres could affect driveability. Have the defective tyre replaced as soon as possible.

The spare wheel is located in the load compartment beneath the floor covering. It is secured with a wing nut.

The spare wheel well is not designed for all permissible tyre sizes. If a wheel wider than the spare wheel has to be stowed in the load compartment, it must be secured with a strap or, depending on the version, with an extension bar.

Storing a replaced wheel in the load compartment using a strap

Use the strap placed in the tool box. Vehicle tools ⇨ 195.

- Position the wheel on the load compartment floor close to one sidewall of the load compartment.

- Place the loop end of the strap through the front lashing eye of the according side.
- Place the hook end of the strap through the loop and pull it until the strap is fastened securely to the lashing eye.

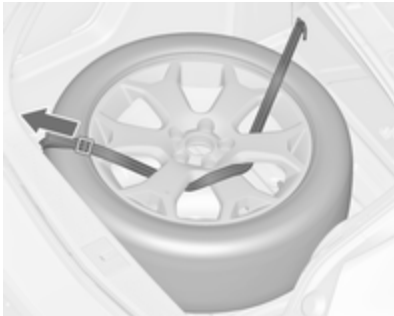

- Insert the strap through the spokes of the wheel as shown in the illustration.
- Mount the hook to the rear lashing eye.
- Tighten the strap and secure it using the buckle.

Storing a replaced wheel in the spare wheel well using an extension bar

Use the extension bar placed in the tool box. Vehicle tools ⇨ 195.

- Turn the wing nut anticlockwise and remove temporary spare wheel.

- Take the extension bar from the tool box and screw it on the bolt.
- Store the damaged wheel and secure it by turning the wing nut clockwise.

The floor cover can be placed on the projecting wheel.

Remove the extension bar before fitting the spare wheel in the well after renewing or repairing the defective wheel.

⚠ Warning

Storing a jack, a wheel or other equipment in the load compartment could cause injury if they are not fixed properly. During a sudden stop or a collision, loose equipment could strike someone.

Store jack and tools always in the respective storage compartments and secure them by fixing.

Place the damaged wheel always in the load compartment secured by the strap or in the spare wheel well secured by the wing nut.

Temporary spare wheel

Caution

The use of the temporary spare wheel could affect driveability. Have the defective tyre renewed or repaired as soon as possible.

Only mount one temporary spare wheel. The permissible maximum speed on the label on the temporary spare wheel is only valid for the factory-fitted tyre size.

If your vehicle gets a flat tyre in the rear while towing another vehicle, mount the temporary spare wheel in the front and the full tyre in the rear.

Tyre chains ⇨ 202.

Spare wheel with directional tyre

If possible, fit directional tyres such that they roll in the direction of travel. The rolling direction is indicated by a symbol (e.g. an arrow) on the sidewall.

The following applies to tyres fitted opposing the rolling direction:

- Driveability may be affected. Have the defective tyre renewed or repaired as soon as possible.
- Drive particularly carefully on wet and snow-covered road surfaces.

Jump starting

Do not start with quick charger.

A vehicle with a discharged vehicle battery can be started using jump leads and the vehicle battery of another vehicle.

⚠ Warning

Be extremely careful when starting with jump leads. Any deviation from the following instructions can lead to injuries or damage caused by vehicle battery explosion or damage to the electrical systems of both vehicles.

⚠ Warning

Avoid contact of the vehicle battery with eyes, skin, fabrics and painted surfaces. The fluid contains sulphuric acid which can cause injuries and damage in the event of direct contact.

- Never expose the vehicle battery to naked flames or sparks.
- A discharged vehicle battery can already freeze at a temperature of 0 °C. Defrost the frozen battery before connecting jump leads.
- Wear eye protection and protective clothing when handling a vehicle battery.
- Use a booster battery with the same voltage (12 volts). Its capacity (Ah) must not be much less than that of the discharged battery.
- Use jump leads with insulated terminals and a cross section of at least 16 mm^2 (25 mm^2 for diesel engines).
- Do not disconnect the discharged battery from the vehicle.
- Switch off all unnecessary electrical consumers.
- Do not lean over the battery during jump starting.
- Do not allow the terminals of one lead to touch those of the other lead.
- The vehicles must not come into contact with each other during the jump starting process.
- Apply the parking brake, transmission in neutral, automatic transmission in **P**.
- Open the positive terminal protection caps of both batteries.

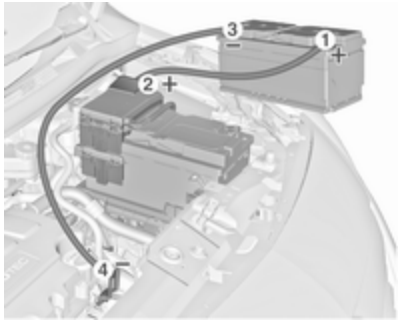

Lead connection order:

1. Connect the red lead to the positive terminal of the booster battery.
2. Connect the other end of the red lead to the positive terminal of the discharged battery.

3. Connect the black lead to the negative terminal of the booster battery.
4. Connect the other end of the black lead to a vehicle grounding point, such as the engine block or an engine mounting bolt. Connect as far away from the discharged battery as possible, however at least 60 cm.

Route the leads so that they cannot catch on rotating parts in the engine compartment.

To start the engine:

1. Start the engine of the vehicle providing the jump.
2. After 5 minutes, start the other engine. Start attempts should be made for no longer than 15 seconds at an interval of 1 minute.
3. Allow both engines to idle for approx. 3 minutes with the leads connected.
4. Switch on electrical consumers (e.g. headlights, heated rear window) of the vehicle receiving the jump start.
5. Reverse above sequence exactly when removing leads.

Towing

Towing the vehicle

Disengage cap at bottom and remove downwards.

The towing eye is stowed with the vehicle tools ⇨ 195.

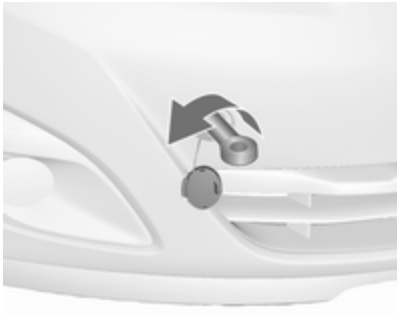

Screw in the towing eye as far as it will go until it stops in a horizontal position.

Attach a tow rope – or better still a tow rod – to the towing eye.

The towing eye must only be used for towing and not for recovering the vehicle.

Caution
Activate the child lock in both rear doors if the rear seats are occupied. Child locks ⇨ 26.

Switch on ignition to release steering wheel lock and to permit operation of brake lights, horn and windscreen wiper.

Transmission in neutral.

Caution
Drive slowly. Do not drive jerkily. Excessive tractive force can damage the vehicle.

When the engine is not running, considerably more force is needed to brake and steer.

To prevent the entry of exhaust gases from the towing vehicle, switch on the air recirculation and close the windows.

Vehicles with automatic transmission: The vehicle must be towed facing forwards, not faster than 80 km/h nor further than 100 km. In all other cases and when the transmission is defective, the front axle must be raised off the ground.

Seek the assistance of a workshop.

After towing, unscrew the towing eye.

Insert cap at the bottom and close cap.

Towing another vehicle

Disengage the cap at the bottom and remove downwards.

The towing eye is stowed with the vehicle tools ⇨ 195.

Screw in the towing eye as far as it will go until it stops in a horizontal position.

The lashing eye at the rear underneath the vehicle must never be used as a towing eye.

Attach a tow rope – or even better a tow bar – to the towing eye.

The towing eye must only be used for towing and not for recovering a vehicle.

Caution
Drive slowly. Do not drive jerkily. Excessive tractive force can damage the vehicle.

After towing, unscrew the towing eye.

Insert cap at the bottom and engage cap.

Appearance care

Exterior care

Locks

The locks are lubricated at the factory using a high quality lock cylinder grease. Use de-icing agent only when absolutely necessary, as this has a degreasing effect and impairs lock function. After using de-icing agent, have the locks regreased by a workshop.

Washing

The paintwork of your vehicle is exposed to environmental influences. Wash and wax your vehicle regularly. When using automatic vehicle washes, select a programme that includes waxing.

Bird droppings, dead insects, resin, pollen and the like should be cleaned off immediately, as they contain aggressive constituents which can cause paint damage.

If using a vehicle wash, comply with the vehicle wash manufacturer's instructions. The windscreen wiper and rear window wiper must be switched off. Remove antenna and external accessories such as roof racks etc.

If you wash your vehicle by hand, make sure that the insides of the wheel housings are also thoroughly rinsed out.

Clean edges and folds on opened doors and the bonnet as well as the areas they cover.

Caution
Always use a cleaning agent with a pH value of 4 to 9. Do not use cleaning agents on hot surfaces.

Have the door hinges of all doors greased by a workshop.

Do not clean the engine compartment with a steam-jet or high-pressure jet cleaner.

Thoroughly rinse and leather-off the vehicle. Rinse leather frequently. Use separate leathers for painted and glass surfaces: remnants of wax on the windows will impair vision.

Do not use hard objects to remove spots of tar. Use tar removal spray on painted surfaces.

Exterior lights

Headlight and other light covers are made of plastic. Do not use any abrasive or caustic agents, do not use an ice scraper, and do not clean them dry.

Polishing and waxing

Wax the vehicle regularly (at the latest when water no longer beads). Otherwise, the paintwork will dry out.

Polishing is necessary only if the paint has become dull or if solid deposits have become attached to it.

Paintwork polish with silicone forms a protective film, making waxing unnecessary.

Plastic body parts must not be treated with wax or polishing agents.

Windows and windscreen wiper blades

Use a soft lint-free cloth or chamois leather together with window cleaner and insect remover.

When cleaning the rear window from inside, always wipe in parallel to the heating element to prevent damage.

For mechanical removal of ice, use a sharp-edged ice scraper. Press the scraper firmly against the glass so that no dirt can get under it and scratch the glass.

Remove dirt residues from smearing wiper blades by using a soft cloth and window cleaner. Also make sure to remove any residues such as wax, insect residues and similar from the window.

Ice residues, pollution and continuous wiping on dry windows will damage or even destroy the wiper blades.

Moonroof

Never clean with solvents or abrasive agents, fuels, aggressive media (e.g. paint cleaner, acetone-containing solutions etc.), acidic or highly alkaline media or abrasive pads. Do not apply wax or polishing agents to the middle part of the moonroof.

Wheels and tyres

Do not use high-pressure jet cleaners.

Clean rims with a pH-neutral wheel cleaner.

Rims are painted and can be treated with the same agents as the body.

Paintwork damage

Rectify minor paintwork damage with a touch-up pen before rust forms. Have more extensive damage or rust areas repaired by a workshop.

Underbody

Some areas of the vehicle underbody have a PVC undercoating while other critical areas have a durable protective wax coating.

After the underbody is washed, check the underbody and have it waxed if necessary.

Bitumen/rubber materials could damage the PVC coating. Have underbody work carried out by a workshop.

Before and after winter, wash the underbody and have the protective wax coating checked.

Liquid gas system

⚠ Danger

Liquid gas is heavier than air and can collect in sink points.

Take care when performing work at the underbody in a pit.

For painting work and when using a drying booth at a temperature above 60 °C, the liquid gas tank must be removed.

Do not make any modifications to the liquid gas system.

Towing equipment

Do not clean the coupling ball bar with a steam-jet or high-pressure jet cleaner.

Rear carrier system

Clean the rear carrier system with a steam-jet or high-pressure jet cleaner at least once a year.

Operate the rear carrier system periodically if not in regular use, in particular during winter.

Interior care

Interior and upholstery

Only clean the vehicle interior, including the instrument panel fascia and panelling, with a dry cloth or interior cleaner.

Clean the leather upholstery with clear water and a soft cloth. In case of heavy soiling, use leather care.

The instrument cluster and the displays should only be cleaned using a soft damp cloth. If necessary use a weak soap solution.

Clean fabric upholstery with a vacuum cleaner and brush. Remove stains with an upholstery cleaner.

Clothing fabrics may not be colourfast. This could cause visible discolourations, especially on light-coloured upholstery. Removable stains and discolourations should be cleaned as soon as possible.

Clean seat belts with lukewarm water or interior cleaner.

Caution

Close Velcro fasteners as open Velcro fasteners on clothing could damage seat upholstery.

The same applies to clothing with sharp-edged objects, like zips or belts or studded jeans.

Plastic and rubber parts

Plastic and rubber parts can be cleaned with the same cleaner as used to clean the body. Use interior cleaner if necessary. Do not use any other agent. Avoid solvents and petrol in particular. Do not use high-pressure jet cleaners.

Service and maintenance

General information **220**
Service information 220
Recommended fluids, lubricants and parts **221**
Recommended fluids and lubricants 221

General information

Service information

In order to ensure economical and safe vehicle operation and to maintain the value of your vehicle, it is of vital importance that all maintenance work is carried out at the proper intervals as specified.

The detailed, up-to-date service schedule for your vehicle is available at the workshop.

Service display ⇨ 91.

European service intervals

Maintenance of your vehicle is required every 30,000 km or after one year, whichever occurs first, unless otherwise indicated in the service display.

A shorter service interval can be valid for severe driving behaviour, e.g. for taxis and police vehicles.

The European service intervals are valid for the following countries:

Andorra, Austria, Belgium, Bosnia-Herzegovina, Bulgaria, Croatia, Cyprus, Czech Republic, Denmark, Estonia, Finland, France, Germany, Greece, Greenland, Hungary, Iceland, Ireland, Italy, Latvia, Liechtenstein, Lithuania, Luxembourg, Macedonia, Malta, Monaco, Montenegro, Netherlands, Norway, Poland, Portugal, Romania, San Marino, Serbia, Slovakia, Slovenia, Spain, Sweden, Switzerland, United Kingdom.

Service display ⇨ 91.

International service intervals

Maintenance of your vehicle is required every 15,000 km or after one year, whichever occurs first, unless otherwise indicated in the service display.

The international service intervals are valid for the countries which are not listed in the European service intervals.

Service display ⇨ 91.

Confirmations

Confirmation of service is recorded in the Service and warranty booklet. The date and mileage is completed with the stamp and signature of the servicing workshop.

Make sure that the Service and warranty booklet is completed correctly as continuous proof of service is essential if any warranty or goodwill claims are to be met, and is also a benefit when selling the vehicle.

Service interval with remaining engine oil life duration

The service interval is based on several parameters depending on usage.

The service display lets you know when to change the engine oil.

Service display ⇨ 91.

Recommended fluids, lubricants and parts

Recommended fluids and lubricants

Only use products that meet the recommended specifications.

⚠ Warning

Operating materials are hazardous and could be poisonous. Handle with care. Pay attention to information given on the containers.

Engine oil

Engine oil is identified by its quality and its viscosity. Quality is more important than viscosity when selecting which engine oil to use. The oil quality ensures e.g. engine cleanliness, wear protection and oil aging control, whereas viscosity grade gives information on the oil's thickness over a temperature range.

Dexos is the newest engine oil quality that provides optimum protection for gasoline and diesel engines. If it is unavailable, engine oils of other listed qualities have to be used. Recommendations for gasoline engines are also valid for Compressed Natural Gas (CNG), Liquified Petroleum Gas (LPG) and Ethanol (E85) fuelled engines.

Select the appropriate engine oil based on its quality and on the minimum ambient temperature ⇨ 225.

Topping up engine oil

Engine oils of different manufacturers and brands can be mixed as long as they comply with the required engine oil quality and viscosity.

Use of engine oil with only ACEA A1/B1 or only A5/B5 quality is prohibited, since it can cause long-term engine damage under certain operating conditions.

Select the appropriate engine oil based on its quality and on the minimum ambient temperature ⇨ 225.

Additional engine oil additives

The use of additional engine oil additives could cause damage and invalidate the warranty.

Engine oil viscosity grades

The SAE viscosity grade gives information of the thickness of the oil.

Multigrade oil is indicated by two figures, e.g. SAE 5W-30. The first figure, followed by a W, indicates the low temperature viscosity and the second figure the high temperature viscosity.

Select the appropriate viscosity grade depending on the minimum ambient temperature ⇨ 225.

All of the recommended viscosity grades are suitable for high ambient temperatures.

Coolant and antifreeze

Use only organic acid type-long life coolant (LLC) antifreeze approved for the vehicle. Consult a workshop.

The system is factory filled with coolant designed for excellent corrosion protection and frost protection down to approx. -28 °C. In northern countries with very low temperatures the factory filled coolant provides frost protection down to approx. -37 °C. This concentration should be maintained all year round. The use of additional coolant additives that intend to give additional corrosion protection or seal against minor leaks can cause function problems. Liability for consequences resulting from the use of additional coolant additives will be rejected.

Brake and clutch fluid

Over time, brake fluid absorbs moisture which will reduce braking effectiveness. The brake fluid should therefore be replaced at the specified interval.

Technical data

Vehicle identification **223**
Vehicle Identification Number .. 223
Identification plate 224
Engine identification 224
Vehicle data **225**
Recommended fluids and lubricants 225
Engine data 228
Performance 230
Vehicle weight 232
Vehicle dimensions 233
Capacities 234
Tyre pressures 235

Vehicle identification

Vehicle Identification Number

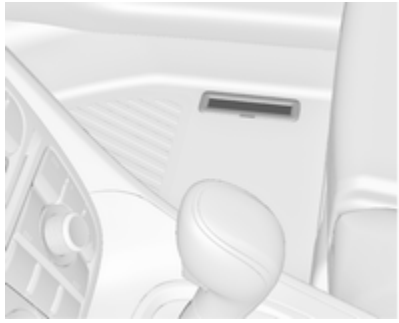

The Vehicle Identification Number is stamped on the identification plate and on the floor pan, under the floor covering, visible under a cover.

The Vehicle Identification Number may be embossed on the instrument panel visible through the windscreen, or in the engine compartment on the right body panel.

Identification plate

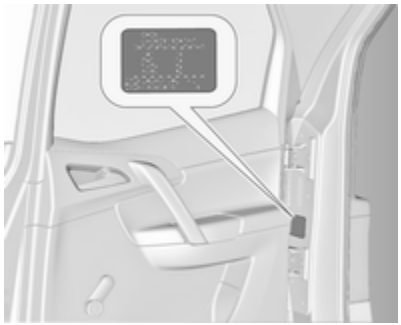

The identification plate is located on the rear or front right door frame.

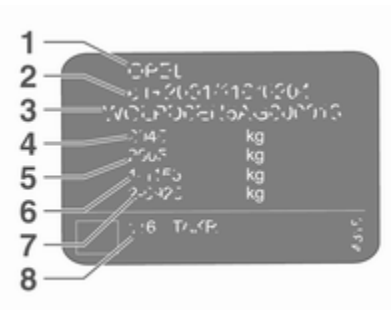

Information on identification label:

1 : manufacturer
2 : type approval number
3 : vehicle identification number
4 : permissible gross vehicle weight rating in kg
5 : permissible gross train weight in kg
6 : maximum permissible front axle load in kg
7 : maximum permissible rear axle load in kg
8 : vehicle-specific or country-specific data

The combined total of front and rear axle loads must not exceed the permissible gross vehicle weight. For example, if the front axle is bearing its maximum permissible load, the rear axle can only bear a load that is equal to the gross vehicle weight minus the front axle load.

The technical data is determined in accordance with European Community standards. We reserve the right to make modifications. Specifications in the vehicle documents always have priority over those given in this manual.

Engine identification

The technical data tables show the engine identifier code. Engine data ⇨ 228.

To identify the respective engine, refer to the engine power in the EEC Certificate of Conformity provided with your vehicle or other national registration documents.

The Certificate of Conformity shows the engine identifier code, other national publications may show the engineering code. Check piston displacement and engine power to identify the respective engine.

Vehicle data

Recommended fluids and lubricants

European service schedule

Required engine oil quality

	All European countries with European service interval ⇨ 220	
Engine oil quality	Petrol engines (including CNG, LPG, E85)	Diesel engines
dexos 1	–	–
dexos 2	✓	✓

In case dexos quality is unavailable you may use max. 1 litre engine oil quality ACEA C3 once between each oil change.

Engine oil viscosity grades

	All European countries with European service interval ⇨ 220
Ambient temperature	Petrol and diesel engines
down to -25 °C	SAE 5W-30 or SAE 5W-40
below -25 °C	SAE 0W-30 or SAE 0W-40

International service schedule

Required engine oil quality

	All countries with international service interval ➪ 220	
Engine oil quality	Petrol engines (including CNG, LPG, E85)	Diesel engines
dexos 1 (if available)	✓	–
dexos 2	✓	✓

In case dexos quality is unavailable you may use the oil qualities listed below:

	All countries with international service interval ➪ 220	
Engine oil quality	Petrol engines (including CNG, LPG, E85)	Diesel engines
GM-LL-A-025	✓	–
GM-LL-B-025	–	✓

	All countries with international service interval ➪ 220	
Engine oil quality	Petrol engines (including CNG, LPG, E85)	Diesel engines
ACEA A3/B3	✓	–
ACEA A3/B4	✓	✓

	All countries with international service interval ⇨ 220	
ACEA C3	✓	✓
API SM	✓	–
API SN resource conserving	✓	–

Engine oil viscosity grades

	All countries with international service interval ⇨ 220
Ambient temperature	Petrol and diesel engines
down to -25 °C	SAE 5W-30 or SAE 5W-40
below -25 °C	SAE 0W-30 or SAE 0W-40
down to -20 °C	SAE 10W-30[1)] or SAE 10W-40[1)]

1) Permitted, but usage of SAE 5W-30 or SAE 5W-40 with dexos quality is recommended.

Engine data

Engine identifier code	B14XER	B14NEL	B14NEL	B14NET
Sales designation	1.4	1.4	1.4 LPG	1.4
Engineering code	B14XER	B14NEL	B14NEL	B14NET
Piston displacement [cm^3]	1398	1364	1364	1364
Engine power [kW]	74	88	88	103
at rpm	6000	4200-6000	4800-6000	4900-6000
Torque [Nm]	130	175/200[2)]	175	200/220[3)]
at rpm	4000	1750-4800	1750-4800	1850-4900
Fuel type	Petrol	Petrol	Liquid gas/Petrol	Petrol
Octane rating RON				
recommended	95	95	95	95
possible	98	98	98	98
possible	91	91	91	91
Additional fuel type	–	–	Liquid gas (LPG)	–

2) With six-speed transmission.
3) With overboost function.

Engine identifier code	B16DTC	B16DTL	B16DTE	B16DTH
Sales designation	**1.6**	**1.6**	**1.6**	**1.6**
Engineering code	**B16DTL**	**B16DTL**	**B16DTE**	**B16DTH**
Piston displacement [cm^3]	1598	1598	1598	1598
Engine power [kW]	70	81	81	100
at rpm	3500	3500	3500	3500-4000
Torque [Nm]	280	300	300	320
at rpm	1500-1750	1750-2000	1750-2000	2000
Fuel type	Diesel	Diesel	Diesel	Diesel

Engine identifier code	A13DTC	A13DTE	A17DTI
Sales designation	**1.3**	**1.3**	**1.7**
Engineering code	**A13DTC**	**A13DTE**	**A17DTI**
Piston displacement [cm^3]	1248	1248	1686
Engine power [kW]	55	70	81
at rpm	4000	4000	3600

Engine identifier code	A13DTC	A13DTE	A17DTI
Sales designation	1.3	1.3	1.7
Engineering code	A13DTC	A13DTE	A17DTI
Torque [Nm]	180	180	280
at rpm	1750-2500	1750-3500	2300
Fuel type	Diesel	Diesel	Diesel

Performance

Engine	B14XER	B14NEL	B14NEL LPG	B14NET
Maximum speed [km/h]				
Manual transmission	177	188	188	196
Automatic transmission	–	185	–	193

Engine	B16DTC	B16DTL	B16DTH	B16DTE
Maximum speed [km/h]				
Manual transmission	174	185	197	185
Automatic transmission	–	–	–	–

Engine	A13DTC	A13DTE	A17DTI
Maximum speed [km/h]			
Manual transmission	160	168	–
Automatic transmission	–	–	178

Vehicle weight

Kerb weight, basic model without any optional equipment

	Engine	Manual transmission	Automatic transmission
without/with air conditioning [kg]	B14XER	1361/1376	–
	B14NEL LPG	1471/1486	–
	B14NEL	1393/1408	1471/1486
	B14NET	1393/1408	1471/1486
	B16DTC	1503/1518	–
	B16DTL	1503/1518	–
	B16DTH	1503/1518	–
	B16DTE	1503/1518	–
	A13DTC	1393/1408	–
	A13DTE	1393/1408	–
	A17DTI	–	1503/1518

Optional equipment and accessories increase the kerb weight.

Loading information ⇨ 79.

Vehicle dimensions

	Meriva
Length [mm]	4300
Width without exterior mirrors [mm]	1812
Width with two exterior mirrors [mm]	1994
Height (without antenna) [mm]	1615
Length of load compartment floor [mm]	815
Length of load compartment with folded rear seats [mm]	1642
Load compartment width [mm]	1038
Load compartment height [mm]	803
Height of load compartment opening [mm]	791
Wheelbase [mm]	2644
Turning circle diameter [m]	11.90

Capacities

Engine oil

Engine	B14XER	B14NEL	B14NEL LPG	B14NET	A13DTC	A13DTE
including Filter [l]	4.0	4.0	4.0	4.0	3.5	3.5
between MIN and MAX [l]	1.0	1.0	1.0	1.0	1.0	1.0

Engine	B16DTC	B16DTL	B16DTH	B16DTE	A17DTI
including Filter [l]	5.0	5.0	5.0	5.0	5.4
between MIN and MAX [l]	1.0	1.0	1.0	1.0	1.0

Fuel tank

Petrol/diesel, refilling quantity [l]	54
LPG, refilling quantity [l]	34

Tyre pressures

Engine	Tyres	Comfort with up to 3 people		ECO with up to 3 people		With full load	
		front	rear	front	rear	front	rear
		[kPa/bar] ([psi])	[kPa/bar] ([psi])	[kPa/bar] ([psi])	[kPa/bar] ([psi])	[kPa/bar] ([psi])	[kPa/bar] ([psi])
B14XER	195/65 R15, 205/55 R16, 225/45 R17, 225/40 R18	230/2.3 (33)	210/2.1 (30)	280/2.8 (41)	260/2.6 (38)	250/2.5 (36)	320/3.2 (46)
B14NEL, B14NEL LPG	195/65 R15, 205/55 R16, 225/45 R17	230/2.3 (33)	210/2.1 (30)	280/2.8 (41)	260/2.6 (38)	250/2.5 (36)	320/3.2 (46)
	225/40 R18	250/2.5 (36)	230/2.3 (33)	300/3.0 (43)	280/2.8 (41)	270/2.7 (39)	320/3.2 (46)
B14NET	205/55 R16, 225/45 R17	230/2.3 (33)	210/2.1 (30)	280/2.8 (41)	260/2.6 (38)	250/2.5 (36)	320/3.2 (46)
	225/40 R18	250/2.5 (36)	230/2.3 (33)	300/3.0 (43)	280/2.8 (41)	270/2.7 (39)	320/3.2 (46)

Engine	Tyres	Comfort with up to 3 people		ECO with up to 3 people		With full load	
		front	rear	front	rear	front	rear
		[kPa/bar] ([psi])	[kPa/bar] ([psi])	[kPa/bar] ([psi])	[kPa/bar] ([psi])	[kPa/bar] ([psi])	[kPa/bar] ([psi])
A13DTC	195/65 R15, 205/55 R16, 225/45 R17, 225/40 R18	230/2.3 (33)	210/2.1 (30)	280/2.8 (41)	260/2.6 (38)	250/2.5 (36)	320/3.2 (46)
A13DTE	195/65 R15, 205/55 R16	230/2.3 (33)	210/2.1 (30)	280/2.8 (41)	260/2.6 (38)	250/2.5 (36)	320/3.2 (46)
B16DTC, B16DTL, B16DTH	205/55 R16, 225/45 R17	250/2.5 (36)	230/2.3 (33)	300/3.0 (43)	280/2.8 (41)	270/2.7 (39)	320/3.2 (46)
	225/40 R18	270/2.7 (39)	250/2.5 (36)	300/3.0 (43)	280/2.8 (41)	280/2.8 (41)	320/3.2 (46)
B16DTE	205/55 R16	250/2.5 (36)	230/2.3 (33)	300/3.0 (43)	280/2.8 (41)	270/2.7 (39)	320/3.2 (46)

Engine	Tyres	Comfort with up to 3 people		ECO with up to 3 people		With full load	
		front	rear	front	rear	front	rear
		[kPa/bar] ([psi])	[kPa/bar] ([psi])	[kPa/bar] ([psi])	[kPa/bar] ([psi])	[kPa/bar] ([psi])	[kPa/bar] ([psi])
A17DTI	205/55 R16, 225/45 R17	250/2.5 (36)	230/2.3 (33)	300/3.0 (43)	280/2.8 (41)	270/2.7 (39)	320/3.2 (46)
	225/40 R18	270/2.7 (39)	250/2.5 (36)	300/3.0 (43)	280/2.8 (41)	280/2.8 (41)	320/3.2 (46)
All	Temporary spare wheel 115/70 R16	420/4.2 (61)	420/4.2 (61)	–	–	420/4.2 (61)	420/4.2 (61)

Customer information

Customer information **238**
Declaration of conformity 238
Collision damage repair 240
Software acknowledgement 240
Vehicle data recording and privacy **242**
Event data recorders 242
Radio Frequency Identification (RFID) 243

Customer information

Declaration of conformity

Transmission systems

This vehicle has systems that transmit and/or receive radio waves subject to Directive 1999/5/EC. These systems are in compliance with the essential requirements and other relevant provisions of Directive 1999/5/EC. Copies of the original Declarations of Conformity can be obtained on our website.

Jack

Wir leben Autos.

Konformitätserklärung

nach EG Richtlinie 2006/42/EG

Hiermit erklären wir, dass das Produkt:

Produktbezeichnung: Wagenheber

Typ/GM-Teilenummern: 13576735

den Bestimmungen der Richtlinie 2006/42/EG entspricht.

Angewendete technische Normen:

GMN9737	Jacking
GM 14337	Standard Equipment Jack - Hardware Tests
GMN5127	Vehicle Integrity-Hoisting and Service Station Jacking
GMW15005	Standard Equipment Jack and Spare Tire, Vehicle Test
ISO TS 16949	Qualitätsmanagementsystem

Der Unterzeichner ist Bevollmächtigter für die Zusammenstellung der technischen Unterlagen.

Rüsselsheim, 31. Januar 2014

Hans-Peter Metzger
Engineering Group Manager Chassis & Structure
Adam Opel AG

Adam Opel AG
Bahnhofplatz
65423 Rüsselsheim
T 0 61 42 7-70, F 0 61 42 7-7 88 00
www.opel.de

Vorstand:
Dr. Karl-Thomas Neumann (Vorsitzender),
Michael F. Ableson, Holger Kimmes,
Michael Lohscheller, Dr. Thomas Sedran,
Peter Thom, Susanna Webber, Johan Willems

Aufsichtsrat:
Stephen J. Ginky (Vorsitzender)

Sitz der Gesellschaft: Rüsselsheim
Handelsregister:
Amtsgericht Darmstadt, HRB 89158

Ein Unternehmen der GM Gruppe

Translation of the original declaration of conformity

Declaration of conformity according to EC Directive 2006/42/EC

We declare that the product:

Product designation: Jack

Type/GM part number: 13576735

is in compliance with the provisions of Directive 2006/42/EC.

Applied technical standards:

GMN9737	:	jacking
GM 14337	:	standard equipment jack – hardware tests
GMN5127	:	vehicle integrity – hoisting and service station jacking
GMW15005	:	standard equipment jack and spare tire, vehicle test
ISO TS 16949	:	quality management systems

The signatory is authorised to compile the technical documentation.

Rüsselsheim, 31st January 2014

signed by

Hans-Peter Metzger

Engineering Group Manager Chassis & Structure

Adam Opel AG

D-65423 Rüsselsheim

Collision damage repair

Paint thickness

Due to production, the thickness of the paint can differ between 50 and 400 µm.

Therefore, different paint thickness is no indicator for a collision damage repair.

Software acknowledgement

Certain OnStar components include libcurl and unzip software and other third party software. Below are the notices and licenses associated with libcurl and unzip and for other third party software please see http://www.lg.com/global/support/opensource/index.

libcurl

Copyright and permission notice

Copyright (c) 1996 - 2010, Daniel Stenberg, <daniel@haxx.se>.

All rights reserved.

Permission to use, copy, modify, and distribute this software for any purpose with or without fee is hereby granted, provided that the above copyright notice and this permission notice appear in all copies.

The software is provided "as is", without warranty of any kind, express or implied, including but not limited to the warranties of merchantability, fitness for a particular purpose and noninfringement of third party rights. In no event shall the authors or

copyright holders be liable for any claim, damages or other liability, whether in an action of contract, tort or otherwise, arising from, out of or in connection with the software or the use or other dealings in the software.

Except as contained in this notice, the name of a copyright holder shall not be used in advertising or otherwise to promote the sale, use or other dealings in this Software without prior written authorization of the copyright holder.

unzip

This is version 2005-Feb-10 of the Info-ZIP copyright and license. The definitive version of this document should be available at ftp://ftp.info-zip.org/pub/infozip/license.html indefinitely.

Copyright (c) 1990-2005 Info-ZIP. All rights reserved.

For the purposes of this copyright and license, “Info-ZIP” is defined as the following set of individuals:

Mark Adler, John Bush, Karl Davis, Harald Denker, Jean-Michel Dubois, Jean-loup Gailly, Hunter Goatley, Ed Gordon, Ian Gorman, Chris Herborth, Dirk Haase, Greg Hartwig, Robert Heath, Jonathan Hudson, Paul Kienitz, David Kirschbaum, Johnny Lee, Onno van der Linden, Igor Mandrichenko, Steve P. Miller, Sergio Monesi, Keith Owens, George Petrov, Greg Roelofs, Kai Uwe Rommel, Steve Salisbury, Dave Smith, Steven M. Schweda, Christian Spieler, Cosmin Truta, Antoine Verheijen, Paul von Behren, Rich Wales, Mike White.

This software is provided “as is,” without warranty of any kind, express or implied. In no event shall Info-ZIP or its contributors be held liable for any direct, indirect, incidental, special or consequential damages arising out of the use of or inability to use this software.

Permission is granted to anyone to use this software for any purpose, including commercial applications, and to alter it and redistribute it freely, subject to the following restrictions:

1. Redistributions of source code must retain the above copyright notice, definition, disclaimer, and this list of conditions.
2. Redistributions in binary form (compiled executables) must reproduce the above copyright notice, definition, disclaimer, and this list of conditions in documentation and/or other materials provided with the distribution. The sole exception to this condition is redistribution of a standard UnZipSFX binary (including SFXWiz) as part of a self-extracting archive; that is permitted without inclusion of this license, as long as the normal SFX banner has not been removed from the binary or disabled.
3. Altered versions--including, but not limited to, ports to new operating systems, existing ports with new graphical interfaces, and dynamic, shared, or static library versions--must be plainly marked as such and must not be misrepresented as being the

original source. Such altered versions also must not be misrepresented as being Info-ZIP releases--including, but not limited to, labeling of the altered versions with the names “Info-ZIP” (or any variation thereof, including, but not limited to, different capitalizations), “Pocket UnZip,” “WiZ” or “MacZip” without the explicit permission of Info-ZIP. Such altered versions are further prohibited from misrepresentative use of the Zip-Bugs or Info-ZIP e-mail addresses or of the Info-ZIP URL(s).

4. Info-ZIP retains the right to use the names “Info-ZIP,” “Zip,” “UnZip,” “UnZipSFX,” “WiZ,” “Pocket UnZip,” “Pocket Zip,” and “MacZip” for its own source and binary releases.

Vehicle data recording and privacy

Event data recorders

Data storage modules in the vehicle

A large number of electronic components of your vehicle contain data storage modules temporarily or permanently storing technical data about the condition of the vehicle, events and errors. In general, this technical information documents the condition of parts, modules, systems or the environment:

- operating conditions of system components (e.g. filling levels)
- status messages of the vehicle and its single components (e.g. number of wheel revolutions / rotational speed, deceleration, lateral acceleration)
- dysfunctions and defects in important system components
- vehicle reactions in particular driving situations (e.g. inflation of an airbag, activation of the stability regulation system)
- environmental conditions (e.g. temperature)

These data are exclusively technical and help identifying and correcting errors as well as optimising vehicle functions.

Motion profiles indicating travelled routes cannot be created with these data.

If services are used (e.g. repair works, service processes, warranty cases, quality assurance), employees of the service network (manufacturer included) are able to read out this technical information from the event and error data storage modules applying special diagnostic devices. If required, you will receive further information at these workshops. After an error has been corrected, the data are deleted from the error storage module or they are constantly overwritten.

When using the vehicle, situations may occur in which these technical data related to other information (accident report, damages on the vehicle, witness statements etc.) may be associated with a specific person - possibly, with the assistance of an expert.

Additional functions contractually agreed upon with the client (e.g. vehicle location in emergency cases) allow the transmission of particular vehicle data from the vehicle.

Radio Frequency Identification (RFID)

RFID technology is used in some vehicles for functions such as tyre deflation detection and ignition system security. It is also used in connection with conveniences such as radio remote controls for door locking/unlocking and starting, and in-vehicle transmitters for garage door openers. RFID technology in Opel vehicles does not use or record personal information or link with any other Opel system containing personal information.

Index

A

Accessories and vehicle modifications 172
Active head restraints..... 36
Adaptive brake light..... 150
Adaptive forward lighting . . 100, 123, 182
Adjustable air vents 136
Airbag and belt tensioners 95
Airbag deactivation 53, 95
Airbag label..... 49
Airbag system 49
Air conditioning regular operation 137
Air conditioning system 130
Air intake 137
Air vents..... 136
Alert..... 108
Antifreeze..... 175
Antilock brake system 150
Antilock brake system (ABS) 97
Anti-theft alarm system 28
Anti-theft locking system 28
Appearance care..... 216
Armrest..... 40, 43
Armrest storage 63
Ashtrays 88
Automatic anti-dazzle 31
Automatic light control 121
Automatic locking 25, 100
Automatic transmission 146
Auxiliary heater..... 136

B

Battery discharge protection 128
Battery voltage 109
Belts..... 45
Bicycle rack..... 64
Bonnet 173
Brake and clutch fluid..... 221
Brake and clutch system 96
Brake assist 152
Brake fluid 176
Brakes 150, 176
Breakdown..... 214
Bulb replacement 180

C

Capacities 234
Car Pass 21
Catalytic converter 146
Central locking system 22
Centre console lighting 127
Changing tyre and wheel size . . . 201
Charging system 96
Child locks 26
Child restraint installation locations 57
Child restraints..... 55
Child restraint systems 55
Cigarette lighter 88

Climate control 16
Climate control, service..... 137
Climate control systems..... 129
Clock..... 86
Code..... 106
Collision damage repair..... 240
Control indicators..... 92
Control of the vehicle 139
Controls..... 82
Controls in steering wheel..... 82
Convex shape 29
Coolant..... 175
Coolant and antifreeze..... 221
Coolant temperature gauge..... 90
Coupling ball bar..... 168
Cruise control 100, 154
Cupholders 61
Curtain airbag system 53
Curve lighting..... 123

D

Danger, Warnings and Cautions ... 4
Dashboard..... 10
Daytime running light..... 121
Daytime running lights 123
Declaration of conformity..... 238
Diesel fuel system bleeding 179
Diesel particle filter..... 98, 145
Door open 100
Doors..... 26
Driver assistance systems..... 154
Driver Information Centre..... 101
Driving characteristics and towing tips 167
Driving hints..... 139

E

Electric adjustment 29
Electrical system..... 189
Electric parking brake..... 97, 151
Electric parking brake fault..... 97
Electronic climate control system 132
Electronic driving programmes .. 148
Electronic Stability Control..... 153
Electronic Stability Control and Traction Control system..... 98
Electronic Stability Control off..... 98
End-of-life vehicle recovery 172
Engine compartment fuse box ... 191
Engine coolant 175
Engine coolant temperature gauge 90
Engine data 228
Engine exhaust 145
Engine identification..... 224
Engine oil 174, 221, 225
Engine oil pressure 99
Entry lighting 127
Event data recorders..... 242
Exhaust gases..... 145
Exit lighting 127
Exterior care 216
Exterior light 99
Exterior lighting 13, 120
Exterior mirrors..... 29

F

Fault 148
First aid..... 78
First aid kit 78
Fixed air vents 137
Flex-Fix system..... 64
Fog light 100
Fog lights..... 124, 125, 184
Folding mirrors 30
Folding tray 78
Front airbag system 52
Front fog lights 124
Front seats..... 37
Front storage..... 63
Front turn signal light..... 180
Front turn signal lights 184
Fuel..... 160
Fuel consumption - CO_2-Emissions 165
Fuel for diesel engines 160
Fuel for liquid gas operation..... 160
Fuel for petrol engines 160
Fuel gauge 90
Fuel selector 90

Fuse box..... 191
Fuses 189

G
Gauges..... 89
General information 166
Glovebox 61
Graphic-Info-Display, Colour-Info-Display 104

H
Halogen headlights 180
Hand brake..... 150, 151
Hazard warning flashers 124
Headlight flash 122
Headlight range adjustment 122
Headlights..... 120, 122
Headlights when driving abroad 122
Head restraint adjustment 8
Head restraints 35
Heated mirrors 30
Heated rear window 33
Heated steering wheel 82
Heating 41
Heating and ventilation system . 129
High beam 100, 122
Hill start assist 152
Horn 14, 83

I
Identification plate 224
Ignition switch positions 140
Immobiliser 29, 99
Indicators..... 89
Information displays..... 101
Instrument cluster 89
Instrument panel fuse box 193
Instrument panel illumination 189
Instrument panel illumination control 126
Instrument panel overview 10
Interior care 218
Interior lighting..... 126
Interior lights 126, 189
Interior mirrors..... 30
Interruption of power supply 148
Introduction 3
ISOFIX child restraint systems 60

J
Jump starting 213

K
Keys 20
Keys, locks..... 20
Keys, memorised settings..... 22

L
Lashing eyes 76
Light covers, misted..... 125
Lighting features..... 127
Light switch 120
Load compartment 27, 73
Load compartment cover 74
Load compartment fuse box 194
Loading information 79
Low fuel 99

M
Malfunction indicator light 96
Manual anti-dazzle 30
Manual mode 148
Manual transmission 149
Manual windows 31
Memorised settings..... 22
Mirror adjustment 8
Misted light covers 125
Moonroof 34

N
New vehicle running-in 140
Number plate light 188

O
Object detection systems..... 156
Octane rating..... 228
Odometer 89
Oil..... 174
Oil, engine..... 221, 225
Oil pressure..... 99
OnStar® system..... 116

Operate pedal..... 96
Outside temperature 85
Overrun cut-off 142

P

Parking 18, 144
Parking assist 156
Parking brake 151
Parking lights 125
Particulate filter..... 145
Performance 230
Performing work 173
Personalisation..... 112
Pollen filter 137
Power outlets 87
Power steering fluid..... 176
Power windows 31
Preheating 98
Puncture..... 207

Q

Quickheat..... 136

R

Radio Frequency Identification (RFID)..... 243
Radio remote control 21
Reading lights 127
Rear carrier system..... 64
Rear doors 26
Rear floor storage cover 75
Rear fog light 100
Rear fog lights 125
Rear seats..... 42
Rear storage..... 74
Rear view camera 158
Rear window wiper/washer 85
Recommended fluids and lubricants 221, 225
Reduced engine power..... 99
Refuelling 162
Remote control..... 21
Retained power off..... 140
Reversing lights 125
Ride control systems..... 153
Roof..... 34
Roof load..... 79
Roof rack 79

S

Safety belts..... 45
Safety net 76
Seat adjustment 6, 38
Seat belt 8
Seat belt reminder 95
Seat belts 45
Seat heating..... 41
Seat position 37
Selector lever 147
Service 137, 220
Service display 91
Service information 220
Service vehicle soon 96
Side airbag system 52
Sidelights..... 120
Side turn signal lights 188
Software acknowledgement..... 240
Spare wheel 210
Speedometer 89
Starting and operating..... 140
Starting off 17
Starting the engine 141
Steering..... 140
Steering wheel adjustment 9, 82
Steering wheel controls 82
Steering wheel, heated..... 82
Stop-start system..... 142
Storage..... 61
Storage compartments..... 61
Sunvisor lights 127
Sun visors 33
Symbols 4

T

Tachometer 89
Tailgate..... 27
Tail lights 185
Technical data..... 228
Three-point seat belt 46
Tools 195
Top-tether fastening eyes 60

Tow bar..... 166
Towing..... 166, 214
Towing another vehicle 215
Towing a trailer..... 167
Towing equipment 168
Towing the vehicle 214
Traction Control system 153
Traction Control system off..... 98
Trailer coupling..... 166
Trailer towing 167
Transmission 17
Transmission display 146
Tread depth 201
Trip computer 109
Trip odometer 89
Tunnel detection..... 121
Turn and lane-change signals … 124
Turn signal 94
Tyre chains 202
Tyre designations 196
Tyre pressure 197
Tyre pressure monitoring
system..... 98, 198
Tyre pressures 235
Tyre repair kit 202
Tyres and wheel size, changing. 201

U

Ultrasonic parking assist 97, 156
Underseat storage 63
Upholstery..... 218
Upshift..... 97
Using this manual 3

V

Variable effort steering..... 97
Vehicle battery 177
Vehicle battery, jump starting..... 213
Vehicle checks..... 173
Vehicle data..... 225
Vehicle data recording and
privacy..... 242
Vehicle dimensions 233
Vehicle Identification Number 223
Vehicle jack..... 195
Vehicle messages 106
Vehicle personalisation 112
Vehicle security..... 28
Vehicle specific data 3
Vehicle storage..... 172
Vehicle tools..... 195
Vehicle unlocking 6
Vehicle weight 232
Ventilation..... 129

W

Warning chimes 108
Warning lights..... 89
Warning triangle 78
Washer and wiper systems 15
Washer fluid 176
Welcome lighting..... 127
Wheel changing 207
Wheel covers 202
Wheels and tyres 196
Windows..... 31
Windscreen..... 31
Windscreen wiper/washer 83
Winter tyres 196
Wiper blade replacement 179

www.opel.com

Copyright by ADAM OPEL AG, Rüsselsheim, Germany.

The information contained in this publication is effective as of the date indicated below. Adam Opel AG reserves the right to make changes to the technical specifications, features and design of the vehicles relative to the information in this publication as well as changes to the publication itself.

Edition: August 2015, ADAM OPEL AG, Rüsselsheim.

Printed on chlorine-free bleached paper.

KTA-2690/10-en

08/2015