Repair Manual

Audi 100 1991 ➤ , Audi 80 1992 ➤ ,
Audi A1 2011 ➤ , Audi A2 2001 ➤ ,
Audi A3 1997 ➤ , Audi A3 2004 ➤ ,
Audi A4 1995 ➤ , Audi A4 2001 ➤ ,
Audi A4 2008 ➤ ,
Audi A4 Cabriolet 2003 ➤ ,
Audi A5 Cabriolet 2009 ➤ ,
Audi A5 Coupé 2008 ➤ ,
Audi A5 Sportback 2010 ➤ ,
Audi A6 1995 ➤ , Audi A6 1998 ➤ ,
Audi A6 2005 ➤ , Audi A6 2011 ➤ ,
Audi A7 Sportback 2011 ➤ ,
Audi A8 1994 ➤ , Audi A8 2003 ➤ ,
Audi A8 2010 ➤ , Audi Cabriolet 1991 ➤ ,
Audi Q5 2008 ➤ , Audi Q7 2007 ➤ ,
Audi R8 2007 ➤ , Audi TT 1999 ➤ ,
Audi TT 2007 ➤

Refrigerant R134a Servicing

Edition 01.2011

Protected by copyright. Copying for private or commercial purposes, in part or in whole, is not permitted unless authorised by AUDI AG. AUDI AG does not guarantee or accept any liability with respect to the contents of this document. Copyright AUDI AG.

Downloaded from www.Manualslib.com manuals search engine

List of Workshop Manual Repair GroupsList of Workshop Manual Repair GroupsList of Workshop Manual Repair Groups

Repair Group

00 - General, Technical Data

Protected by copyright. Copying for private or commercial purposes, in part or in whole, is not permitted unless authorised by AUDI AG. AUDI AG does not guarantee or accept any liability with respect to the correctness of information in this document. Copyright by AUDI AG.

Technical information should always be available to the foremen and mechanics, because their careful and constant adherence to the instructions is essential to ensure vehicle road-worthiness and safety. In addition, the normal basic safety precautions for working on motor vehicles must, as a matter of course, be observed.

All rights reserved.
No reproduction without prior agreement from publisher.

Copyright © 2011 Audi AG, Ingolstadt

D3E80064E3D

Downloaded from www.Manualslib.com manuals search engine

Contents

00 - General, Technical Data 1

1 General Information 1
1.1 A/C System 1
1.2 Laws and Regulations 12
1.3 A/C System Principles 18
1.4 Refrigerant Circuit and Components 21

2 Description and Operation 41
2.1 Refrigerant Circuit 41
2.2 Switches and Sensors on Refrigerant Circuit and Connections 74
2.3 Electrical Components Not on Refrigerant Circuit 78
2.4 A/C Service Station 79

3 Specifications 94
3.1 Charging Refrigerant 94
3.2 Refrigerant R134a Capacities 94
3.3 Refrigerant Oils 117
3.4 Refrigerant Oil Capacities 119

4 Diagnosis and Testing 142
4.1 Pressure Gauge, Tests and Measurements 142
4.2 Leak Detection 143
4.3 Refrigerant Circuit Concerns 151
4.4 Pressures, Checking 153

5 Removal and Installation 191
5.1 Leaking or Damaged Components Except A/C Compressor, Accumulator or Receiver - Circuit Empty of Refrigerant 191
5.2 Leaking or Damaged Components Except A/C Compressor, Accumulator or Receiver - Circuit Contains Refrigerant 193
5.3 Compressor, Replacing Without Flushing Refrigerant Circuit 193
5.4 Compressor, Replacing Due to Leakage Or Internal Damage 194
5.5 Receiver or Accumulator and Restrictor, Replacing After Cleaning Refrigerant Circuit 195
5.6 Receiver or Accumulator, Replacing Without Flushing Refrigerant Circuit 196
5.7 Dryer Cartridge and Dryer Bag, Replacing Without Flushing Refrigerant Circuit 197

6 Special Tools 198
6.1 Commercially Available Tools and Materials 198
6.2 Improvised Tools 203

Protected by copyright. Copying for private or commercial purposes, in part or in whole, is not permitted unless authorised by AUDI AG. AUDI AG does not guarantee or accept any liability with respect to the correctness of information in this document. Copyright by AUDI AG.

Downloaded from www.Manualslib.com manuals search engine

Protected by copyright. Copying for private or commercial purposes, in part or in whole, is not permitted unless authorised by AUDI AG. AUDI AG does not guarantee or accept any liability with respect to the correctness of information in this document. Copyright by AUDI AG.

Downloaded from www.Manualslib.com manuals search engine

00 – General, Technical Data

1 General Information

⇒ "1.1 A/C System", page 1

⇒ "1.2 Laws and Regulations", page 12

⇒ "1.3 A/C System Principles", page 18

⇒ "1.4 Refrigerant Circuit and Components", page 21

1.1 A/C System

⇒ "1.1.1 Refrigerant R134a", page 1

⇒ "1.1.2 Refrigerant R134a Characteristics", page 2

⇒ "1.1.3 Refrigerant R134a Vapor Pressure Table", page 4

⇒ "1.1.4 Handling Refrigerant", page 5

⇒ "1.1.5 Refrigerant Oil", page 7

⇒ "1.1.6 Refrigerant Oil Characteristics", page 7

⇒ "1.1.7 Safety Precautions", page 8

⇒ "1.1.8 Safety Precautions for Working with Extraction and Charging System", page 9

⇒ "1.1.9 Handling Pressure Vessels", page 9

⇒ "1.1.10 Service and Recycling Units", page 10

⇒ "1.1.11 Vehicles with A/C Compressor Without A/C Clutch, Only with A/C Compressor Regulator Valve", page 10

⇒ "1.1.12 Repairing A/C System", page 10

Protected by copyright. Copying for private or commercial purposes, in part or in whole, is not permitted unless authorised by AUDI AG. AUDI AG does not guarantee or accept any liability with respect to the correctness of information in this document. Copyright by AUDI AG.

1.1.1 Refrigerant R134a

Vehicle air conditioning systems make use of the vaporization and condensation process. In this case, one works with a substance which boils easily, designated as refrigerant.

The refrigerant employed is tetrafluoroethane R134a, which boils at - 26.5° C at a vapor pressure of 1 bar.

Refrigerant R134a Environmental Information

- R134a is a fluorocarbon and contains no chlorine.
- R134a has a shorter atmospheric life span than refrigerant R12.
- R134a does not damage the ozone layer. The ozone depletion potential is zero.
- The greenhouse potential of R134a (Global Warming Potential = GWP) is approximately 1300 (the GWP of carbon dioxide = 1).
- The global warming effect of R134a is "ten" times less than that of refrigerant R12.

Vehicles manufactured after 1992 have air conditioning systems that use refrigerant R134a. This refrigerant does not contain chlorine and does not deplete the ozone layer.

Refrigerant R12 was used through 1992. Due to its chlorine atoms, this CFC has a high potential for depleting the ozone layer as well as a tendency to increase the greenhouse effect.

Downloaded from www.Manualslib.com manuals search engine

Conversion programs are available for old existing systems filled with the ozone-depleting substance R12. Refer to Repair manual for air conditioners with refrigerant R12 (this repair manual is only available in hard copy).

For environmental protection reasons, refrigerants must not be released into the atmosphere. For laws and regulations, refer to ⇒ “1.2 Laws and Regulations“, page 12 .

Refrigerant R134a Physical Data

Chemical formula	CH2F–CF3 or CF3–CH2F
Chemical designation	Tetrafluoroethane
Boiling point at 1 bar	-26.5 °C
Solidification point	-101.6 °C
Critical temperature	100.6 °C
Critical pressure	40.56 bar (absolute)

Critical Point

The critical point (critical temperature and critical pressure) is that above which there is no longer a boundary between liquid and gas.

Protected by copyright. Copying for private or commercial purposes, in part or in whole, is not permitted unless authorised by AUDI AG. AUDI AG does not guarantee or accept any liability with respect to the correctness of information in this document. Copyright by AUDI AG.

A substance above its critical point is always in the gaseous state.

At temperatures below the critical point, all types of refrigerant in pressure vessels exhibit both a liquid and a gas phase, for example, there is a layer of gas above the liquid.

As long as both liquid and gas are present in the vessel, the pressure is governed by ambient temperature. Refer to ⇒ “1.1.3 Refrigerant R134a Vapor Pressure Table“, page 4 .

Note

Different types of refrigerant are never to be mixed. Only the refrigerant designated for the corresponding A/C system may be used.

1.1.2 Refrigerant R134a Characteristics

The vapor pressure curves of R134a and other refrigerants are sometimes very similar, therefore it is not possible to make a certain distinction solely by pressure.

With R134a, the A/C compressor is lubricated with special synthetic refrigerant oils, for example, PAG oils (polyalkylene glycol oils).

Trade Names and Designations

Refrigerant R134a is currently available under the following trade names:

- H-FKW 134a
- SUVA 134a
- KLEA 134a

Downloaded from www.Manualslib.com manuals search engine

Note

- *Different trade names may be used in other countries.*
- *Of the wide range of refrigerants available, this is the only one which may be used for vehicles. The designations Frigen and Freon are trade names. They also apply to refrigerants which may not be used in automotive vehicles.*

Product Characteristics

Refrigerants used in motor vehicle air conditioning systems belong to the new generation of refrigerants based on chlorine-free, partially fluorinated hydrocarbons (H-FKW, R134a).

With regard to their physical properties, these are refrigerants which have been liquefied under pressure. They are subject to the regulations governing pressure vessels and use is only to be made of approved and appropriately marked containers.

Compliance with specific conditions is required to ensure safe and proper use.

Vapor Pressure

In a partially filled, closed vessel, the quantity of refrigerant evaporating from the surface equals the quantity returning to the liquid state as vapor particles condense. This state of equilibrium occurs under the influence of pressure and is often called vapor pressure. Vapor pressure is a function of temperature. Refer to ⇒ “1.1.3 Refrigerant R134a Vapor Pressure Table“, page 4 .

Protected by Copyright - Copying for private or commercial purposes, in part or in whole, is not permitted unless authorised by AUDI AG. AUDI AG does not guarantee or accept any liability with respect to the correctness of information in this document. Copyright by AUDI AG.

Color

Like water, refrigerants are colorless in both vapor and liquid form. Gas is invisible. Only the boundary layer between gas and liquid is visible. (Liquid level in tube of charging cylinder or bubbles in sight glass). Refrigerant R134a fluid may appear colored (milky) in a sight glass. This cloudiness is caused by partially dissolved refrigerant oil and does not indicate a malfunction.

Affect on Metal

In its pure state, refrigerant R134a is chemically stable and does not corrode iron or aluminum.

Refrigerant impurities such as chlorine compounds however cause corrosion of certain metals and plastics. This can lead to blockage, leaks or deposits on the A/C compressor piston.

Critical Temperature/Pressure

The refrigerant R134a remains chemically stable up to a gas pressure of 39.5 bar (corresponding to a temperature of 101° C). Above this temperature, the refrigerant decomposes (refer to "Combustibility").

Water Content

Only very small amounts of water are soluble in liquid refrigerant. On the other hand, refrigerant vapor and water vapor mix in any ratio.

Any water in the refrigerant circuit will be entrained in droplet form once the dryer in the receiver or reservoir has absorbed as little as approximately 7g of water. This water flows as far as the nozzle of the expansion valve or restrictor and turns to ice, the A/C system no longer has a cooling effect.

Water destroys the air conditioner as it combines with other impurities at high pressures and temperatures to form acids.

Downloaded from www.Manualslib.com manuals search engine

Combustibility

Refrigerant is non-flammable. It actually has a fire-resistant or fire extinguishing effect. Refrigerant decomposes when exposed to flames or red-hot surfaces. UV light (occurring for example during electric welding) also causes refrigerant decomposition. The resultant decomposition products are toxic and are not to be inhaled. However, irritation of the mucous membranes provides an adequate and timely warning.

Charge Factor

A vessel must have space for vapor as well as liquid. As the temperature rises, the liquid expands. The vapor-filled space becomes smaller. At a certain point, there will only be liquid in the vessel. Beyond this, even a slight increase in temperature causes great pressure to build up in the vessel as the liquid attempts to continue expanding despite the absence of the necessary space. The forces that result are strong enough to rupture the vessel. To prevent a vessel from being overfilled, the regulations regarding compresses gasses specify how many kilograms of refrigerant that may be added to a vessel per liter of interior volume. Multiplying this filling factor with the interior volume gives the permitted filling capacity. The figure for refrigerant used in vehicles is 1.15 kg / liter.

Leak Detection

External damage, for example, can cause a leak in the refrigerant circuit. The small quantity of refrigerant escaping from minor leaks can be detected for example using an electronic leak detector or by introducing a leak detection additive into the refrigerant circuit. Electronic leak detectors are capable of registering leaks with refrigerant losses of less than 5 g per year.

Note

Protected by copyright. Copying for private or commercial purposes, in part or in whole, is not permitted unless authorised by AUDI AG. AUDI AG does not guarantee or accept any liability with respect to the correctness of information in this document. Copyright by AUDI AG.

Use leak detectors designed for the type of refrigerant. For example, a leak detector for R12 refrigerant will not work with R134a because R134a refrigerant has no chlorine atoms so the leak detector will not respond to it.

1.1.3 Refrigerant R134a Vapor Pressure Table

The vapor pressure table for every refrigerant is published in literature for refrigeration system engineers. This table makes it possible to determine the vapor pressure acting on the column of liquid in a vessel if the temperature of the vessel is known.

Because each refrigerant has its own characteristic vapor pressure table, refrigerant can be identified by measuring the pressure and temperature.

Note

- *At absolute pressure, 0 bar corresponds to absolute vacuum. Normal ambient pressure (positive pressure) equals 1 bar absolute pressure. 0 bar pressure corresponds to an absolute pressure of one bar on most pressure gauges (indicated by -1 bar below 0).*
- *Pressure is measured in different units: 1 MPa (mega Pascal) corresponds to 10 bar positive pressure or 145 psi, 1 bar absolute pressure corresponds to 0 bar positive pressure and thus to the ambient pressure (atmospheric pressure).*

Downloaded from www.Manualslib.com manuals search engine

Temperature in °C	Pressure in Bar (Positive Pressure) of R134a
-45	-0.61
-40	-0.49
-35	-0.34
-30	-0.16
-25	0.06
-20	0.32
-15	0.63
-10	1.00
-5	1.43
0	1.92
5	2.49
10	3.13
15	3.90
20	4.70
25	5.63
30	6.70
35	7.83
40	9.10
45	10.54
50	12.11
55	13.83
60	15.72
65	17.79
70	20.05
75	22.52
80	25.21
85	28.14
90	31.34

1.1.4 Handling Refrigerant

If refrigerant vessels are opened, the contents may escape in liquid or vapor form. This process is intensified the higher the pressure in the vessel.

The pressure level is governed by two factors:

Protected by copyright. Copying for private or commercial purposes, in part or in whole, is not permitted unless authorised by AUDI AG. AUDI AG does not guarantee or accept any liability with respect to the correctness of information in this document. Copyright by AUDI AG.

- The type of refrigerant in the vessel. The lower the boiling point, the higher the pressure.
- The temperature level. The higher the temperature, the higher the pressure.

WARNING

- *There is a danger of ice-up.*
- *The refrigerant can then escape as a fluid or vapor.*
- *Do not open containers, which store refrigerant.*

Downloaded from www.Manualslib.com manuals search engine

Protective Eyewear

Put on protective goggles. They prevent refrigerant getting into the eyes, as this could cause severe injury from exposure to cold.

Protective Gloves and Clothing

Greases and oils dissolve readily in refrigerants. They would therefore destroy the protective layer of grease if allowed to come into contact with the skin. Degreased skin is however sensitive to the cold and germs.

Fluid Refrigerant and Skin Precaution

The refrigerant draws heat for evaporation from the surrounding area. Even if this is the skin. This may cause extremely low temperatures. Local frost bite may result (boiling point of R134a: -26.5° C at ambient pressure).

Refrigerant Vapor Precaution

If highly concentrated refrigerant vapor escapes, it mixes with the surrounding air and displaces the oxygen necessary for breathing.

Smoking Hazard

A burning cigarette can cause refrigerant to decompose. The resultant substances are toxic and must not be inhaled.

Welding and Soldering on Refrigeration Systems

Before performing welding or soldering work on vehicles in the vicinity of air conditioning system components, extract refrigerant and remove remnants by blowing out with nitrogen.

The products of refrigerant decomposition due to the effect of heat are not only toxic, but may also have a highly corrosive effect on pipes and system components. They mainly take the form of hydrogen fluoride.

Pungent Odor

A pungent odor indicates that the products of decomposition mentioned above have already formed. Avoid inhaling these substances under all circumstances, as otherwise the respiratory system, lungs and other organs could be damaged.

Protected by copyright. Copying for private or commercial purposes, in part or in whole, is not permitted unless authorised by AUDI AG. AUDI AG does not guarantee or accept any liability with respect to the correctness of information in this document. Copyright by AUDI AG.

First Aid

- Following contact with eyes or mucous membranes, immediately rinse with copious amounts of running water and consult an eye specialist.
- Following contact with the skin, immediately remove affected clothing and rinse skin with copious amounts of water.
- Following inhalation of highly concentrated refrigerant vapors, immediately take the affected person into the open air. Call a doctor. Administer oxygen in the event of breathing difficulties. If the affected person has difficulty breathing or cannot breathe, tip head back and perform mouth to mouth respiration.

◆ Handling Pressure Vessels, refer to ⇒ “1.1.9 Handling Pressure Vessels“, page 9 .

Downloaded from www.Manualslib.com manuals search engine

1.1.5 Refrigerant Oil

Caution

- *Handling refrigerant oil, refer to Audi ServiceNet, HSO Environment (or Volkswagen ServiceNet, Handbooks, Service Handbook; Protecting the Environment, Emissions Protection).*

Refrigerant oil mixes with the refrigerant (about 20-40%, depending on compressor type and amount of refrigerant) and circulates constantly in the system, lubricating the moving parts.

Special synthetic refrigerant oils, such as polyalkylene glycol (PAG) oil, are used in conjunction with R134a air conditioning systems. This is necessary as mineral oil, for example, does not mix with R134a. In addition, the materials of the R134a air conditioning system could be corroded as a result of mixture flowing through the refrigerant circuit under pressure at high temperatures or breakdown of the lubricating film in the compressor. Using non-approved oils can cause the HVAC system to malfunction. Only use approved oils.

Refer to Electronic Parts Catalog (ETKA).

Type of oil for R134a in motor vehicles: PAG (polyalkylene glycol) oil

Note

- *Do not store open containers of refrigerant oil because it attracts moisture.*
- *Always keep oil containers sealed.*
- *Do not use old refrigerant oil over again. Disposing of refrigerant oil of unknown origin, refer to Audi ServiceNet, HSO Environment (or Volkswagen ServiceNet, Handbooks, Service Handbook; Protecting the Environment, Emissions Protection).*
- *Ester-based oils are only intended for use in large systems, not in passenger vehicle systems.*
- Refrigerant Oil Characteristics, refer to ⇒ “1.1.6 Refrigerant Oil Characteristics“, page 7 .

1.1.6 Refrigerant Oil Characteristics

Protected by copyright. Copying for private or commercial purposes, in part or in whole, is not permitted unless authorised by AUDI AG. AUDI AG does not guarantee or accept any liability with respect to the accuracy of information in this document. Copyright by AUDI AG.

The most important properties are a high degree of solubility with refrigerant, good lubricity, absence of acid and minimal water content. Only certain oils are permitted. For a list of approved refrigerant oils and capacities, refer to ⇒ “3.3 Refrigerant Oils“, page 117 .

PAG oils, which are appropriate for refrigerant R134a, are highly hygroscopic and do not mix with other oils. Opened containers should therefore be closed again immediately to prevent ingress of moisture. Moisture and acids promote aging of refrigerant oil, causing it to become dark and viscous as well as corrosive towards metals.

Downloaded from www.Manualslib.com manuals search engine

Note

- *Refrigerant oil, because of its chemical properties, must not be disposed of with engine oils or transmission oils. Disposing of refrigerant oil of unknown origin, refer to Audi ServiceNet, HSO Environment (or Volkswagen ServiceNet, Handbooks, Service Handbook; Protecting the Environment, Emissions Protection).*
- *Only the oil approved for the A/C compressor may be used in refrigerant circuits with refrigerant R134a. Refer to the Electronic Parts Catalog (ETKA) and*
  ⇒ "3.3 Refrigerant Oils", page 117 .

1.1.7 Safety Precautions

WARNING

- ***It is recommended to have an eye-flushing bottle available.***
- ***If liquid refrigerant has come in contact with your skin and eyes, immediately flush with cool water for 15 minutes. Afterwards instill eye drops and consult a doctor immediately, even when the eyes are not hurting.***
- ***The doctor must be informed that the injury was caused by refrigerant R134a. Should refrigerant come into contact with other parts of the body despite compliance with safety regulations, these must likewise be rinsed immediately for at least 15 minutes with cold water.***
- ***Work on refrigerant system should only be performed in ventilated areas (workshops). Switch on existing ventilation systems.***
- ***Refrigerant must not be stored in low-lying areas such as cellars or in their entry ways or windowsills.***

- Do not attempt repair on filled air conditioning systems by soldering, brazing or welding. This pertains also for welding and soldering work on the vehicle, in the event that parts of the climate control system may heat up When performing paint work repairs, the temperature in the drying booth or preheating zone must not exceed 80° C.

Reason

Exposure to heat increases the pressure in the system, which could cause the pressure relief valve to open.

Corrective action

– Discharge refrigerant circuit using service station.

Protected by copyright. Copying for private or commercial purposes, in part or in whole, is not permitted unless authorised by AUDI AG. AUDI AG does not guarantee or accept any liability with respect to the correctness of information in this document. Copyright by AUDI AG.

Note

Always replace damaged or leaking A/C system components. Do not attempt to repair them by soldering, brazing or welding.

Refrigerant vessels (e.g. charging cylinders of A/C service station) must never be subjected to excessive heat or exposed to direct sunlight.

Downloaded from www.Manualslib.com manuals search engine

Corrective action

– Vessels must never be completely filled with liquid refrigerant. Without sufficient room for expansion (gas cushion), vessels will rupture with devastating effect in the event of an increase in temperature. Refer to
⇒ “1.1.2 Refrigerant R134a Characteristics“, page 2 .

Refrigerant is never to be transferred to systems or vessels in which air is present.

Corrective action

Protected by copyright. Copying for private or commercial purposes, in part or in whole, is not permitted unless authorised by AUDI AG. AUDI AG does not guarantee or accept any liability with respect to the correctness of information in this document. Copyright by AUDI AG.

– Evacuate systems and vessels before charging with refrigerant.

♦ As per VBG 20, German industrial liability insurance association.

♦ Pay attention to the workshop-specific instructions. Refer to Audi ServiceNet, HSO Environment Protection.It should be kept in the workshop.

1.1.8 Safety Precautions for Working with Extraction and Charging System

- Make sure the shut-off valves are closed before connecting the charging system to the air conditioning system.
- Before disconnecting the charging system from the air conditioning system, make sure the charging process has been completed to stop refrigerant escaping into the atmosphere.
- Once the purified refrigerant from the charging system has been transferred to an external compressed-gas cylinder, close the hand shut-off valves at the cylinder and charging system.
- Do not expose charging system to moisture or use it in a wet environment.
- Disconnect from power supply before performing service work on the charging system.
- Never use an extension cable on account of the fire hazard. If the use of an extension cable is unavoidable, the minimum cross-section should be 2.5 mm^2.
- In case of fire, remove external cylinder.
- Entrained oil from the air conditioning system drawn by the suction unit into the measurement vessel supplied is subsequently to be transferred to a sealed container as it contains a small quantity of refrigerant. It must not be released into the environment.
- Following shutdown, service station is to be secured to stop it rolling away.

1.1.9 Handling Pressure Vessels

Secure vessels to prevent them falling over!

Secure upright cylinders to stop them falling over and cylinders lying flat to stop them rolling away.

Do not throw vessels!

If dropped, the vessels could be so severely deformed that they rupture. The refrigerant evaporates immediately, liberating considerable force. Flying fragments of cylinders can cause severe injuries.

Downloaded from www.Manualslib.com manuals search engine

To protect the valves, cylinders are only to be transported with protective cap screwed on.

Valves may break off if cylinders are not properly transported.

Never store in the vicinity of radiators.

High temperatures may occur next to radiators. High temperatures are also accompanied by high pressures and the maximum permissible vessel pressure may be exceeded.

Temperature Warning

To avoid possible risk, pressure vessel regulations specify that vessels are not to be heated to in excess of 50° C.

Heating Warning

Do not heat with a naked flame under any circumstances. Localized overheating can cause structural changes in the vessel material, which then reduce its ability to withstand pressure. There is also a danger of refrigerant decomposition due to localized overheating.

Empty Containers

Empty refrigerant vessels must always be sealed to prevent the ingress of moisture. Moisture causes steel vessels to corrode. This weakens the vessel walls. In addition, rust particles entering into refrigeration systems from vessels will cause malfunctioning.

1.1.10 Service and Recycling Units

At this time, service units for extracting, cleaning and filling refrigerant for motor vehicle A/C systems are available on the market from various manufacturers.

Certain service stations (with appropriate auxiliary device and different adapters if necessary) can also be used for flushing the refrigerant circuit. Refer to
⇒ “1.4.13 Refrigerant Circuit Flushing With Refrigerant R134a“, page 32 .

- Extraction System Group Classifications, refer to ⇒ “1.2.3 Extraction System Group Classifications“, page 16 .
- Charging Systems not Requiring a Permit, refer to ⇒ “1.2.2 Charging Systems Not Requiring a Permit“, page 15 .

Protected by copyright. Copying for private or commercial purposes, in part or in whole, is not permitted unless authorised by AUDI AG. AUDI AG does not guarantee or accept any liability with respect to the correctness of information in this document. Copyright by AUDI AG.

1.1.11 Vehicles with A/C Compressor Without A/C Clutch, Only with A/C Compressor Regulator Valve

- The engine can be started only after the refrigerant circuit has been completely assembled (the A/C compressor runs continuously).
- If the engine has to be operated with the refrigerant circuit empty, only do so for as long as absolutely essential and avoid high engine speeds.

1.1.12 Repairing A/C System

- Air conditioning systems designed for refrigerant R12 are only to be filled with refrigerant R134a if certain requirements are fulfilled. Refer to ⇒ “1.2.4 Refrigerant Circuit, Converting R12 to R134a and Servicing“, page 17 and Repair manual: Air conditioner with R12 Parts 2 and 3. This repair manual is only available in hard copy.

Downloaded from www.Manualslib.com manuals search engine

- The refrigerant oils specifically developed for R134a and R12 refrigerant circuits are never to be mixed.
- Service stations which come in contact with the refrigerant are only to be used for the intended refrigerant.
- Components of R134a refrigerant circuits can be identified by their markings, green labels or design (such as different threads) to prevent interchanging with components designed for refrigerant R12.
- A label indicating the refrigerant used is provided in the engine compartment on the lock carrier or in the plenum chamber.
- Different refrigerants are never to be mixed.

Note

When working on the refrigerant circuit, always heed the information given in the Sections on Safety measures. Refer to
⇒ "1.1.7 Safety Precautions", page 8 *and*
⇒ "1.4.1 Refrigerant Circuit Precautions", page 21 .

Protected by copyright. Copying for private or commercial purposes, in part or in whole, is not permitted unless authorised by AUDI AG. AUDI AG does not guarantee or accept any liability with respect to the correctness of information in this document. Copyright by AUDI AG.

WARNING

- ***When performing work on refrigerant circuit, observe all generally applicable safety precautions and pressure vessel regulations.***

Special Tools and Accessories

The performance of proper workmanlike repairs on an air conditioning system:

- Requires the use of special tools and materials as listed in ⇒ "6 Special Tools", page 198 .
- Requires compliance with the basic instructions for use of leak detectors. Refer to ⇒ "4.2.1 Refrigerant Circuit, Determining Leaks ", page 143 .
- Requires expert knowledge.

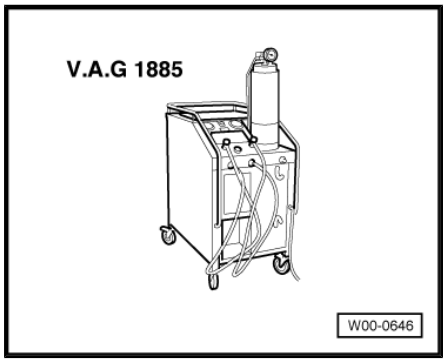

Note

Environmentally hazardous draining of refrigerant is an offense punishable by law. Refer to
⇒ "1.2 Laws and Regulations", page 12 .

Downloaded from www.Manualslib.com manuals search engine

1.2 Laws and Regulations

⇒ "1.2.1 Laws and Regulations", page 12

⇒ "1.2.2 Charging Systems Not Requiring a Permit", page 15

⇒ "1.2.3 Extraction System Group Classifications", page 16

⇒ "1.2.4 Refrigerant Circuit, Converting R12 to R134a and Servicing", page 17

⇒ "1.2.5 Refrigerant, Keeping Records", page 17

1.2.1 Laws and Regulations

Note

The laws and regulations listed below are applicable in Germany. Different or additional laws and regulations may apply in other countries.

Protected by copyright. Copying for private or commercial purposes, in part or in whole, is not permitted unless authorised by AUDI AG. AUDI AG does not guarantee or accept any liability with respect to the correctness of information in this document. Copyright by AUDI AG.

The effects of climate change can be seen worldwide. Protecting the climate is one of the most important responsibilities. However, this responsibility presents enormous challenges to all involved.

The Kyoto Protocol outlines worldwide goals regarding climate protection, among other things. In addition to target reductions of carbon dioxide, this protocol also outlines target reductions for fluorinated greenhouse gases such as refrigerant R134a due to their high potential of contributing to the greenhouse effect.

Numerous laws have been created for the automotive industry, for example at the European level. For example, chemical-climate protection regulations were put into effect on August 1, 2008 in Germany in order to define the European legislation in more detail.

- Provision (EU) no. 2037/2000
- Provision (EU) no. 842/2006
- Provision (EU) no. 706/2007
- Provision (EU) no. 307/2008
- Guideline 2006/40/EU
- Chemical-climate protection provision, recycling management and disposal regulations (for Germany).

Maintenance and Repair Work On A/C System Refrigerant Circuit

All individuals performing maintenance and repair work on vehicle A/C systems must have completed a training program and be competent in the work required. Other regulations may apply in addition to those of the European Union.

The following general points apply

Operation, repair, decommissioning, take-back obligation

- When operating, repairing and decommissioning items that contain refrigerant, allowing the refrigerant to vent into the air is prohibited.
- Keep records on the quantities used during operation and maintenance. Refer to Audi ServiceNet, HSO Environment so they can be presented to the authorities upon request. A record sheet no longer needs to be kept in the EU due to a provision by the European Parliament in 2005. Other provisions may apply in countries that are not members of the EU.

Downloaded from www.Manualslib.com manuals search engine

- Distributors of the substances and preparations discussed above are obligated to accept these items back after use or to ensure they are accepted by a third party of their choosing.
- Maintenance and decommissioning of items containing refrigerant that are named in the legislation Substances and preparations named in this legislation may only be accepted by those with the necessary expertise and technical equipment.

Criminal offenses and infringements of the law

- Willfully or negligently venting refrigerant into the air when operating, repairing or decommissioning items that contain refrigerant constitutes a violation of the laws and legislation described above.

Technical Regulations For Compressed Gases (TRG) 400, 401, 402

Note

The TRG are listed (concerning vehicle manufacturers and workshops) below.

Reproduction, copyright, copying for private or commercial purposes, in part or in whole, is not permitted unless authorised by AUDI AG. AUDI AG does not guarantee or accept any liability with respect to the correctness of information in this document. Copyright by AUDI AG.

- TRG 400 (general regulations for charging systems)
  - Definition of terms and explanatory notes
  - Charging systems
  - Charging systems are systems for filling mobile compressed-gas vessels. The charging system includes the premises and facilities concerned.
  - Charging system requiring permits

Note

- *Charging systems requiring a permit are ones used to transfer compressed gases to mobile compressed-gas vessels for supplying to third parties.*
- *Charging systems not requiring a permit are ones used for transferring compressed gases to mobile compressed-gas vessels for internal use only.*

- TRG 401 (installation of charging systems)
  - Does not apply to vehicle manufacturers or workshops.
- TRG 402 (operation of charging systems)
  - Employees and employee instruction

Note

Employees are to be given instruction on the following topics before beginning work and at regular, appropriate intervals, however at least once a year

- Hazards specifically associated with handling compressed gases.
- Safety regulations, particularly the applicable TRG.
- Procedures in the event of malfunction, damage and accidents.

Downloaded from www.Manualslib.com manuals search engine

- The use of fire-extinguishing and protective equipment.
- Operation and maintenance of the charging system on the basis of the instructions for use.

– Charging systems are only to be operated and maintained by personnel.

– Aged 18 and above.

– Possessing the necessary technical knowledge.

– Who can be relied on to work diligently.

Note

Supervised work may also be performed by personnel that do not meet the requirements stipulated.

Charging (a separate TRG applies to vessels from other countries and their charging).

♦ A compressed-gas vessel is only to be filled with the compressed gas declared on it and the quantity must comply with the stipulated pressure, weight or volume data (refer to pressure vessel regulations).

♦ In the case of vessels approved for use with several types of compressed gas, the compressed gas with which it is to be filled and - if the compressed gas has a tc ≥ -10° C (tc = critical temperature) - the maximum permissible charging weight in line with TRG 104 must be marked on the vessel prior to connection for filling.

♦ Compressed-gas vessels marked with the maximum permissible charge pressure in bar at 15° C must be filled manometrically. If, at the time of filling, the temperature is not 15° C, the pressure corresponding to the prevailing temperature must be established; it must be ensured that the permissible charge pressure at 15° C is not exceeded in the compressed- gas vessel. The charged vessels are to be checked by way of random pressure measurements to determine possible overfilling.

Protected by copyright. Copying for private or commercial purposes, in part or in whole, is not permitted unless authorised by AUDI AG. AUDI AG does not guarantee or accept any liability with respect to the correctness of information in this document. Copyright by AUDI AG.

♦ Compressed-gas vessels on which the maximum permissible capacity is indicated by the net weight (filling weight, permissible weight of fill) in kilograms must be filled gravimetrically. The vessels are to be weighed during filling and subsequently subjected to a weight check on special scales to establish possible overfilling. Scales used for this purpose must be calibrated.

♦ Under certain conditions, gases with a tc ≥ +70° C may be transferred volumetrically from compressed-gas vessels with a maximum volume of 150 l to compressed-gas vessels with a volume of maximum 1000 ccm. The stipulations of the TRG apply to the transfer of liquefied gas to cylinders used by workmen.

♦ The following TRG's applies to vehicle vessels:

– For gases with tk ≥ +70° C TRG 101.

– Industrial gas mixtures with tk ≥ +70° C TRG 102 or TRG 103:

– Liquefied extremely low-temperature compressed gases (refer to TRG 103) may, contrary to item 4, be filled volumetrically if the charging system and/or the vessels is/are equipped with devices for measuring or limiting the volume of the charge and – with the exception of motor vehicle vessels as per item 3 – for measuring the temperature of the charge. When filling volumetrically, it must be ensured that the permissible charge

Downloaded from www.Manualslib.com manuals search engine

weight indicated on the vessel is not exceeded. To determine possible overfilling, the filled containers are to be checked gravimetrically on a calibrated scale or – provided that the pressurized gases are not highly toxic – volumetrically. Volumetric checking requires the use of appropriate equipment. The charging and checking devices must be independent of each other.

- Charging and check measurements are to be performed by different people. Check measurements must be performed immediately upon completion of the filling process.
- Overfilled vessels must be drained immediately and in a safe manner until the permissible fill is attained. The compressed-gas fill is then to be determined again.
- Items 4 to 7 do not apply to vessels for liquefied, extremely low-temperature compressed gases which are neither flammable nor toxic; this does not affect the provisions of road traffic legislation.
- 10. When filling compressed gas vessels with liquefied gases at charging temperatures less than or equal to -20° C, the compressed gas vessel (if the vessel material has not been tested for temperatures less than or equal to -20° C) is not to be released from the charging system for transportation until the vessel wall temperature is greater than or equal to +20° C.

Recycling and Disposal Regulations

- Specifications and rules for handling and disposing of refrigerants and refrigerant oils can be found in the chemical-climate protection provision and recycling and disposal regulations. These are valid in Germany. Different specifications and rules may apply in other countries.

Disposal of Refrigerant

Refrigerants intended for disposal are to be transferred to marked recycling containers, observing the permissible filling quantity. Refer to the chemical-climate protection provision and the recycling and disposal regulations in Germany. Different specifications and rules may apply in other countries.

Disposal of refrigerant oil

Used refrigerant oils from systems employing halogenated hydrocarbons are to be disposed of as waste subject to special supervision. They are not to be mixed with other oils or substances. Proper storage and disposal must be ensured in line with local regulations. Refer to the chemical-climate protection provision and the recycling and disposal regulations in Germany. Different specifications and rules may apply in other countries. Refer to Audi ServiceNet, HSO Environment.

1.2.2 Charging Systems Not Requiring a Permit

Protected by copyright. Copying for private or commercial purposes, in part or in whole, is not permitted unless authorised by AUDI AG. AUDI AG does not guarantee or accept any liability with respect to the correctness of information in this document. Copyright by AUDI AG.

WARNING

When performing work on refrigerant circuit or when handling refrigerant observe all generally applicable safety precautions and pressure vessel regulations.

Charging systems not requiring a permit are ones used for transferring compressed gases to mobile compressed-gas vessels for internal use only.

Downloaded from www.Manualslib.com manuals search engine

Note

Some service units are charging systems not requiring a permit. When working with such equipment, the refrigerant is not transferred to mobile compressed-gas vessels, but rather into a permanently installed charging cylinder with visible level gauge and float switch.

Recommendation

It is advisable to use a portable cylinder with visible level gauge and pressure relief valve for surplus refrigerant for internal use.

Attention must be paid to TRG 402 (technical regulations for compressed gases) when transferring compressed gases to other compressed-gas vessels.

1.2.3 Extraction System Group Classifications

WARNING

When performing work on refrigerant circuit or when handling refrigerant observe all generally applicable safety precautions and pressure vessel regulations.

Protected by copyright. Copying for private or commercial purposes, in part or in whole, is not permitted unless authorised by AUDI AG. AUDI AG does not guarantee or accept any liability with respect to the correctness of information in this document. Copyright by AUDI AG.

Note

- *The service and recycling units used in motor vehicle workshops are extraction and charging systems not requiring a permit (Group 3) but which are only to be operated by qualified personnel. Instructions for unit operation and maintenance can be found in the relevant manufacturer's documentation.*
- *Extraction and charging systems of groups 1 and 2 are not used in motor vehicle workshops.*

Extraction and Charging Systems Of Group 3

Mobile extraction and charging systems for filling compressed-gas vessels permanently connected to the system.

The refrigerant or refrigerant/oil mixture is transferred to compressed gas vessels which are permanently connected to the mobile systems. In accordance with 3 Para. 5 No. 3 of pressure vessel regulations, compressed-gas vessels are classified as pressure vessels in this case.

The charging systems require:

– No permit

– No expert testing as the gas is transferred to compressed-gas vessels which are classed as being pressure vessels. (Systems used for transfer from these pressure vessels to compressed-gas vessels for supplying to third parties do however require a permit and are subject to mandatory testing).

Downloaded from www.Manualslib.com manuals search engine

1.2.4 Refrigerant Circuit, Converting R12 to R134a and Servicing

Note

- *For environmental reasons and on account of the corresponding legislation, refrigerant R12 can no longer be manufactured or supplied. Refrigerant R134a has been developed as a replacement for R12.*
- *Air conditioning systems developed and designed for refrigerant R12 cannot however simply be charged with refrigerant R134a. To ensure trouble-free operation of the air conditioning system even after conversion, various components of the refrigerant circuit must be replaced.*
- *A precise description of the conversion procedure and information on the servicing of converted refrigerant circuits can be found in Repair Manual: Air conditioner with refrigerant R12 Parts 2 and 3. (This repair manual is only available in hard copy).*

1.2.5 Refrigerant, Keeping Records

The environmental statistics law requires records to be kept on the use of refrigerants.

Protected by copyright. Copying for private or commercial purposes, in part or in whole, is not permitted unless authorised by AUDI AG. AUDI AG does not guarantee or accept any liability with respect to the correctness of information in this document. Copyright by AUDI AG.

Consequently, motor vehicle workshops may well have to provide the relevant local authorities with information on their use of refrigerant. It is recommended to always keep a record sheet Audi ServiceNet, HSO Environment.

Note

- *It is recommended to keep a record sheet because the local authorities can request information regarding refrigerant use starting from a certain amount (currently starting with a use of 20 kg in a year).*
- *Other provisions may apply in countries that are not members of the EU.*

Downloaded from www.Manualslib.com manuals search engine

1.3 A/C System Principles

⇒ "1.3.1 Physical Principles", page 18

⇒ "1.3.2 Pressure and Boiling Point", page 18

⇒ "1.3.3 Comfort", page 19

⇒ "1.3.4 A/C System Operation", page 20

1.3.1 Physical Principles

The four known states of water also apply to air conditioning system refrigerants.

1 - Gaseous (invisible)

2 - Vapor

3 - Liquid

4 - Solid

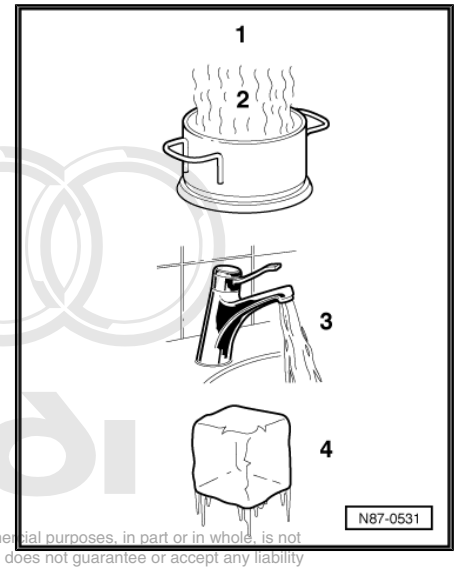

Protected by copyright. Copying for private or commercial purposes, in part or in whole, is not permitted unless authorised by AUDI AG. AUDI AG does not guarantee or accept any liability with respect to the correctness of information in this document. Copyright by AUDI AG.

When water is heated in a vessel (heat absorption), water vapor can be seen to rise. If the vapor is further heated through heat absorption, the visible vapor turns into invisible gas. The process is reversible. If heat is extracted from water in gaseous form -A-, it changes first to vapor -B-, then to water and finally to ice.

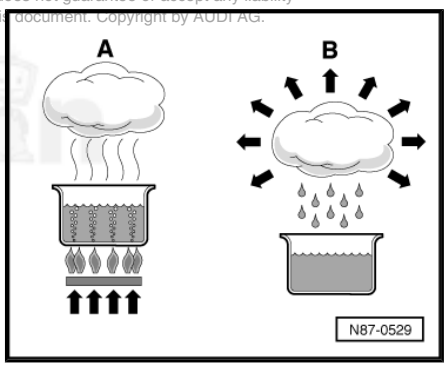

A - Heat absorption

B - Heat emission

Heat Transfer

Every substance consists of a mass of moving molecules. The fast moving molecules of a warmer substance give off some of their energy to the cooler and thus slower molecules. As a result, the molecular motion of the warmer substance slows down and that of the colder substance is accelerated. This process continues until the molecules of both substances are moving at the same speed. They are then at the same temperature and no further heat exchange takes place.

1.3.2 Pressure and Boiling Point

The boiling point given in tables for a liquid is always referenced to an atmospheric pressure of 1 bar. If the pressure acting on a fluid changes, its boiling point also changes.

Note

Pressure is measured in different units: 1 MPa (mega Pascal) corresponds to 10 bar positive pressure or 145 psi, 1 bar absolute pressure corresponds to 0 bar positive pressure and thus to the ambient pressure (atmospheric pressure).

Downloaded from www.Manualslib.com manuals search engine

Water boils at a lower temperature the lower the pressure.

The vapor pressure curves for water and refrigerant R134a show that, at constant pressure, reducing the temperature changes vapor to liquid (in the condenser) or that reducing the pressure causes the refrigerant to change from liquid to vapor (inside the evaporator).

Vapor Pressure Curve Of Water

A - Liquid

B - Gas

C - Vapor pressure curve of water

1 - Pressure acting on liquid in bar (absolute)

2 - Temperature in °C

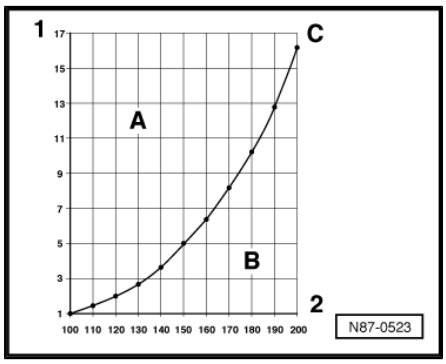

Vapor Pressure Curve Of Refrigerant R134a

A - Liquid

B - Gas

D - Vapor pressure curve of refrigerant R134a

1 - Pressure acting on liquid in bar (absolute)

2 - Temperature in °C

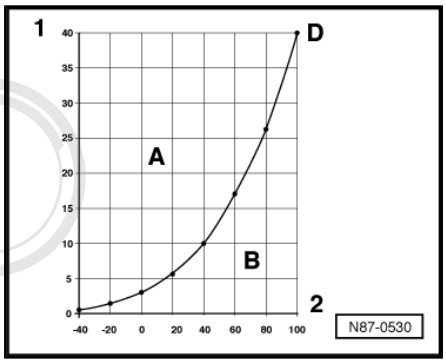

1.3.3 Comfort

Being comfortable while driving leads to better concentration and safe driving. Air conditioning makes drivers and passengers more comfortable when temperatures or humidity are high. Comfort can of course also be enhanced by opening windows/sun roof or increasing the air output, such a course of action is however associated with certain drawbacks for the occupants of the vehicle, such as more noise, draughts, exhaust fumes and unfiltered pollen (unpleasant for allergy sufferers).

Protected by copyright. Copying for private or commercial purposes, in part or in whole, is not permitted unless authorised by AUDI AG. AUDI AG does not guarantee or accept any liability with respect to the correctness of information in this document. Copyright by AUDI AG.

Climate control together with a good heating and ventilation system concept can create a sense of well-being and comfort by regulating temperature, humidity and air circulation in the passenger compartment to suit ambient conditions. This is done both when the vehicle is moving and when it is stationary.

Air conditioning also offers these advantages:

- It cleans the air that enters the vehicle interior. The damp fins on the evaporator collect dust and pollen, which is then removed by condensation.
- Temperatures in a mid-size vehicle (for example: after a short drive, outside temperature 30° C in the shade and the vehicle exposed to sunlight).

	With A/C System	Without A/C System
Head area	23° C	42° C
Upper body area	24° C	40° C
Foot area	30° C	35° C

Downloaded from www.Manualslib.com manuals search engine

1.3.4 A/C System Operation

The temperature in the passenger compartment depends on the amount of heat radiated through the windows and conducted by the metal parts of the body. In hot weather it is possible to achieve a more comfortable temperature for the passengers by pumping off some of the heat.

As heat spreads into cooler areas, the passenger compartment is equipped with a unit for generating low temperatures. In the unit, refrigerant is constantly evaporated. The heat required for this is extracted from the air flowing through the evaporator.

After absorbing heat, the refrigerant is pumped off through the compressor. The action of the A/C compressor increases the heat content and temperature of the refrigerant. Its temperature is then substantially higher than that of the surrounding air.

The warm refrigerant flows to the condenser. There, the refrigerant dissipates its heat to the surrounding air via the condenser due to the temperature gradient between the refrigerant and the surrounding air.

The refrigerant thus acts as a heat transfer medium. As it is to be reused, the refrigerant is returned to the evaporator.

For this reason all air conditioning systems are based on the refrigerant circulation principle. There are however differences in the combination of aggregates.

- Comfort, refer to ⇒ “1.3.3 Comfort“, page 19 .
- Environmental concerns, refer to ⇒ “1.1.1 Refrigerant R134a“, page 1 .

Protected by copyright. Copying for private or commercial purposes, in part or in whole, is not permitted unless authorised by AUDI AG. AUDI AG does not guarantee or accept any liability with respect to the correctness of information in this document. Copyright by AUDI AG.

Downloaded from www.Manualslib.com manuals search engine

1.4 Refrigerant Circuit and Components

⇒ "1.4.1 Refrigerant Circuit Precautions", page 21

⇒ "1.4.2 Component Replacement", page 22

⇒ "1.4.3 Connections For Quick-Release Coupling On Refrigerant Circuit", page 24

⇒ "1.4.4 O-Ring Seals", page 24

⇒ "1.4.5 Quick-Release Connections on Refrigerant Lines", page 25

⇒ "1.4.6 Refrigerant Circuit Connections with Valve for Switches", page 26

⇒ "1.4.7 Refrigerant Circuit Pipes and Hoses", page 26

⇒ "1.4.8 Refrigerant Circuit Pressures and Temperatures", page 27

⇒ "1.4.9 Refrigerant Circuit, Converting R12 to R134a ", page 27

⇒ "1.4.10 Refrigerant Circuit, Cleaning", page 27

⇒ "1.4.11 Refrigerant Circuit, Flushing", page 28

⇒ "1.4.12 Refrigerant Circuit Flushing With Compressed Air and Nitrogen ", page 29

⇒ "1.4.13 Refrigerant Circuit Flushing With Refrigerant R134a", page 32

⇒ "1.4.14 Refrigerant Circuit, Repairing", page 39

⇒ "1.4.15 Switches and Sensors", page 39

Protected by copyright. Copying for private or commercial purposes, in part or in whole, is not permitted unless authorised by AUDI AG. AUDI AG does not guarantee or accept any liability with respect to the correctness of information in this document. Copyright by AUDI AG.

1.4.1 Refrigerant Circuit Precautions

- Any refrigerant circuit components submitted for quality observation must be sealed (use the caps that come with the replacement part).
- Replace damaged or leaking components of refrigerant circuit. Refer to ⇒ "5 Removal and Installation", page 191 .

Note

To date, the following replacement parts (A/C compressor, reservoir, evaporator and condenser) are filled with nitrogen gas. This charge is being gradually discontinued. Little or no pressure equalization is therefore noticeable on unscrewing sealing plugs from replacement parts.

- Workshop-specific instructions, refer to Audi ServiceNet, HSO Environment.
- Ensure absolute cleanliness when working.
- Wear safety goggles and gloves when working with refrigerant and nitrogen.
- Switch on existing ventilation systems.
- Use service station to discharge refrigerant circuit, only then open screw connections and replace malfunctioning components.
- Use a cap to seal off any opened assemblies and hoses to prevent moisture and dirt from getting in.

Downloaded from www.Manualslib.com manuals search engine

- Make exclusive use of tools and materials intended for refrigerant R134a.
- Seal opened refrigerant oil containers to guard against moisture.

Note

- *After engine all service work, screw sealing caps (with seals) onto all connections with valve and service connections.*
- *Before starting up A/C system. Observe vehicle specific filling capacities, refer to*
  ⇒ "3.2 Refrigerant R134a Capacities", page 94 .
- *Do not fill refrigerant, extract refrigerant present and refill the system.*

1.4.2 Component Replacement

- All components of the refrigerant circuit submitted for quality observation are always to be sealed (use original sealing caps of replacement part).
- To date, the following replacement parts (A/C compressor, accumulator, receiver, evaporator and condenser) have been filled with nitrogen gas. This charging stops gradually or the charging pressure is so low that gas does not escape noticeably when opening.
- On vehicles installed with a compressor with no A/C clutch, the engine is only to be started following complete assembly of the refrigerant circuit (compressor always in operation as well) .
- When the refrigerant circuit is empty, the A/C compressor with A/C compressor regulator valve -N280- (without A/C clutch) is switched to internal lubrication with the result that only a minimal amount of oil is pumped from the compressor into the circuit.

Protected by copyright. Copying for private or commercial purposes, in part or in whole, is not permitted unless authorised by AUDI AG. AUDI AG does not guarantee or accept any liability with respect to the accuracy of the information in this document. Copyright by AUDI AG.

Downloaded from www.Manualslib.com manuals search engine

Note

- *As parts are sometimes stored for lengthy periods and at different locations within the spare parts organization, it is entirely possible that gas will escape from some parts and not from others on initial opening (even in the case of identical spare part numbers). Sealing caps at replacement part connections are therefore to be removed carefully and the nitrogen gas allowed to escape slowly.*

Protected by copyright. Copying for private or commercial purposes, in part or in whole, is not permitted unless authorized by AUDI AG. AUDI AG does not guarantee or accept any liability with respect to the content of this document or its contents in any way.

- *The refrigerant circuit is equipped either with a restrictor and accumulator or with an expansion valve and receiver.*
- *Dryer cartridge or components with desiccant bag (accumulator, receiver) are always to be replaced after cleaning refrigerant circuit (flushing with refrigerant R134a, refer to* *⇒ "1.4.13 Refrigerant Circuit Flushing With Refrigerant R134a", page 32* *or blowing through using compressed air and nitrogen* *⇒ "1.4.12 Refrigerant Circuit Flushing With Compressed Air and Nitrogen ", page 29* *); in doing so, leave sealed as long as possible to minimize absorption of moisture.*
- *Dryer cartridge or components with desiccant bag (accumulator, receiver) are to be replaced if required for certain repair manual operations or if the refrigerant circuit has been open for a lengthy period and moisture has penetrated (such as following an accident). Refer to* *⇒ "5.1 Leaking or Damaged Components Except A/C Compressor, Accumulator or Receiver - Circuit Empty of Refrigerant", page 191* *.*
- *The period of time which a refrigerant circuit may be left open without having to replace a component with desiccant bag (accumulator, receiver) depends on ambient influences to a large extent. Given a high ambient temperature and a high humidity level or if the vehicle, for example, has been standing in the open or driven (in wet, foggy weather conditions), the period will be considerably shorter than for a vehicle which has been standing in a heated dry area. The size of the opening through which moisture may enter into the circuit also influences the period for which a refrigerant circuit can be left open without having to replace the component with desiccant bag. Refer to* *⇒ "5.1 Leaking or Damaged Components Except A/C Compressor, Accumulator or Receiver - Circuit Empty of Refrigerant", page 191* *.*
- *Seal open connections and pipes (to prevent absorption of moisture).*
- *Always replace restrictor.*

Caution

- ***Dispose of dirty or used oils of unknown origin. Refer to Audi ServiceNet, Handbooks, HSO Environment.***

- Leaking or damaged components except a/c compressor, accumulator or receiver, refer to ⇒ "5.1 Leaking or Damaged Components Except A/C Compressor, Accumulator or Receiver - Circuit Empty of Refrigerant", page 191 .
- Leaking or damaged components except a/c compressor, accumulator or receiver, refer to ⇒ "5.2 Leaking or Damaged Components Except A/C Com-

Downloaded from www.Manualslib.com manuals search engine

pressor, Accumulator or Receiver - Circuit Contains Refrigerant", page 193 .

- Compressor, replacing without the need for flushing refrigerant circuit, refer to
  ⇒ "5.3 Compressor, Replacing Without Flushing Refrigerant Circuit", page 193 .
- Compressor, replacing on account of leakage or internal damage, refer to
  ⇒ "5.4 Compressor, Replacing Due to Leakage Or Internal Damage", page 194 .
- Receiver or accumulator and restrictor, replacing after cleaning refrigerant circuit, refer to
  ⇒ "5.5 Receiver or Accumulator and Restrictor, Replacing After Cleaning Refrigerant Circuit", page 195
- Receiver or accumulator, replacing without the need for flushing refrigerant circuit, refer to
  ⇒ "5.6 Receiver or Accumulator, Replacing Without Flushing Refrigerant Circuit", page 196 .
- Dryer cartridge / dryer bag, replacing without the need for flushing refrigerant circuit, refer to
  ⇒ "5.7 Dryer Cartridge and Dryer Bag, Replacing Without Flushing Refrigerant Circuit", page 197 .

1.4.3 Connections For Quick-Release Coupling On Refrigerant Circuit

- Only valves and connections that are resistant to refrigerant R134a and refrigerant oil must be installed.
- Different connections (outer diameter) for high pressure and low pressure side.
- Discharge refrigerant circuit before removing valves or valve inserts.
- Always screw on sealing caps.

Allocation in the vehicle, refer to ⇒ Heating, Ventilation and Air Conditioning; Rep. Gr. 87 ; Removal and Installation (vehicle-specific repair manual).

- Connections with Schrader valve (needle valve), refer to
  ⇒ "2.1.4 Connections with Schrader Valve", page 58 .
- Connections with primary sealing valve, (ball valve)
  ⇒ "2.1.5 Connections with Primary Sealing Valve (Ball Valve)", page 59 .

Protected by copyright. Copying for private or commercial purposes, in part or in whole, is not permitted unless authorised by AUDI AG. AUDI AG does not guarantee or accept any liability with respect to the correctness of information in this document. Copyright by AUDI AG.

1.4.4 O-Ring Seals

- Make exclusive use of seals which are resistant to refrigerant R134a and the related refrigerant oils. Color coding of O-rings is no longer employed. Colored and black O-rings are used.
- Be sure to use seals with the correct inner diameter. Refer to Electronic Parts Catalog (ETKA) and⇒ Heating, Ventilation and Air Conditioning; Rep. Gr. 87 ; General Information (vehicle-specific repair manual).
- The O-rings may be used one time only.
- Coat the seals lightly with refrigerant oil (PAG oil) before installing.

Downloaded from www.Manualslib.com manuals search engine

1.4.5 Quick-Release Connections on Refrigerant Lines

WARNING

The quick acting coupling connectors may be unlocked and opened only if the refrigerant circuit is empty.

Note

- *This illustration shows a refrigerant pipe with an inner heat exchanger that is installed in the Audi A4 from MY 2008 and on the Audi A5 Coupe from MY 2008. Refer to ⇒ Heating, Ventilation and Air Conditioning; Rep. Gr. 87 ; Removal and Installation (vehicle-specific repair manual).*
- *The retaining ring -A-, for example, must be opened using the release tool for air conditioner couplings -T40149/- in order to remove the refrigerant pipes-D-. Refer to ⇒ Heating, Ventilation and Air Conditioning; Rep. Gr. 87 ; Removal and Installation (vehicle-specific repair manual).*
- *Replace the quick-release couplings -B- and -G- after removing the refrigerant line with the support ring -E- or -H- and O-ring -F- or -J-. Refer to ⇒ Heating, Ventilation and Air Conditioning.; Rep. Gr. 87 ; Removal and Installation (vehicle-specific repair manual) and Electronic Parts Catalog (ETKA).*

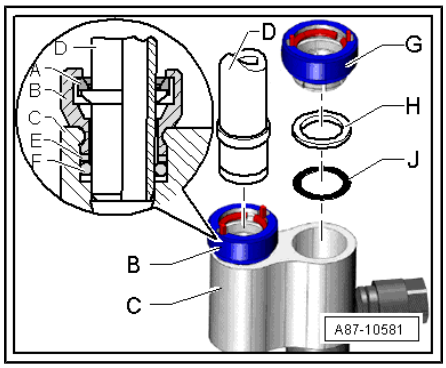

A - Retaining ring (inside the quick-release coupling, high pressure side)

B - Quick-release coupling with retaining ring (high pressure side)

C - Refrigerant line with an inner heat exchanger

D - Refrigerant line (high pressure side)

E - Support ring (high pressure side)

F - O-ring (high pressure side)

G - Quick-release coupling with retaining ring (low pressure side)

H - Support ring (low pressure side)

J - O-ring (low pressure side)

Protected by copyright. Copying for private or commercial purposes, in part or in whole, is not permitted unless authorised by AUDI AG. AUDI AG does not guarantee or accept any liability with respect to the correctness of information in this document. Copyright by AUDI AG.

Downloaded from www.Manualslib.com manuals search engine

Note

-
- *There are different quick-release coupling versions -A- and -D-. The refrigerant lines -C- can unlocked and removed, for example, using the release tool -T40149/1- in the same manner with both versions.*
- *The check pins on the -B-quick-release couplings -A- installed at Start Of Production are visible -C-, when the locked refrigerant line -C- is pulled in the direction of arrow.*
- *Beginning with MY 2010, as a running change, the quick-release coupling -D- installed and the refrigerant line -C- are being installed in the same manner as the quick-release coupling -A-. If the refrigerant line -C- is pulled in the direction of arrow after assembling, the ring -E- will come out of the quick-release coupling -D- and will show that the retaining ring -F- is completely latched to the refrigerant line -C-. Then the ring -E- can be removed from the refrigerant line -C-.*

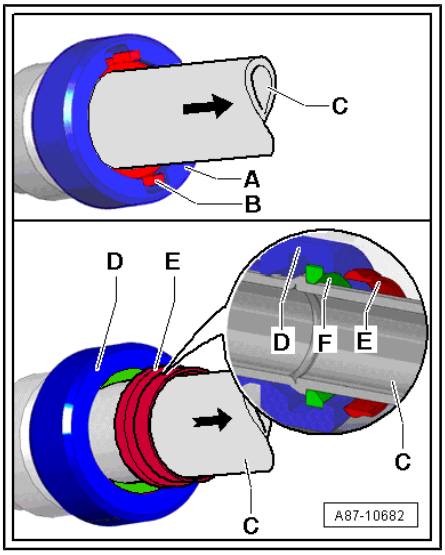

1.4.6 Refrigerant Circuit Connections with Valve for Switches

- Different threads for switch on high pressure and low pressure sides.
- Only valves and O-ring seals that are resistant to refrigerant R134a and refrigerant oil must be installed.

A - Connection (soldered in)

B - O-ring seal

C - Valve (with O-ring seal)

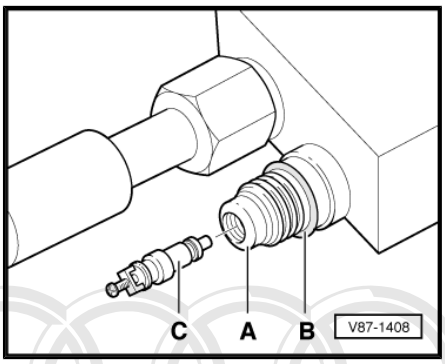

Note

For removing and installing the valve set -B- when the refrigerant circuit is evacuated, for example, use an adapter from the Socket for A/C valves -T10364- . For the correct tightening specification, refer to ⇒ *"2.1.4 Connections with Schrader Valve", page 58* .

1.4.7 Refrigerant Circuit Pipes and Hoses

The mixture of refrigerant oil and refrigerant R134a corrodes certain metals (such as copper) and alloys and dissolves some hose materials. Therefore use original replacement parts only.

Pipes and hoses are joined by threaded connections or special plug connectors.

Protected by copyright. Copying for private or commercial purposes, in part or in whole, is not permitted unless authorised by AUDI AG. AUDI AG does not guarantee or accept any liability with respect to the correctness of information in this document. Copyright by AUDI AG.

Note

Observe specified torque for threaded connections, use appropriate release tools for plug connectors.

Downloaded from www.Manualslib.com manuals search engine

1.4.8 Refrigerant Circuit Pressures and Temperatures

Caution

- *When performing work on refrigerant circuit, observe all generally applicable safety precautions and pressure vessel regulations.*

The pressures and temperatures in the refrigerant circuit depend on the current operating conditions (such as engine RPM, coolant fan level 1, 2 or 3, engine temperature, A/C compressor on or off) as well as on the effects of outside influences (such as outside temperature, humidity, desired cooling output).

In vehicles with A/C compressor regulator valve -N280- , the pressure is modified on the low pressure side by the A/C compressor regulator valve.

For this reason, values indicated in the following table are valid only as reference points. They are attained at an engine speed of 1500 to 2000 RPM and an ambient temperature of 20° C after about 20 minutes.

Copying for private or commercial purposes, in part or in whole, is not permitted unless authorised by AUDI AG. AUDI AG does not guarantee or accept any liability

The connections for the pressure gauge set intended for the pressure measurement are indicated on the vehicle specific refrigerant circuit. Refer to ⇒ Heating, Ventilation and Air Conditioning; Rep. Gr. 87 ; Diagnosis and Testing (vehicle-specific repair manual).

At 20° C with the engine not running, the pressure in the refrigerant circuit is 4.7 bar. Refer to
⇒ “1.1.3 Refrigerant R134a Vapor Pressure Table“, page 4 .

Note

Pressure is measured in different units: 1 MPa (mega Pascal) corresponds to 10 bar positive pressure or 145 psi, 1 bar absolute pressure corresponds to 0 bar positive pressure and thus to the ambient pressure (atmospheric pressure).

- Refrigerant Circuit with Expansion Valve, refer to
⇒ “2.1.13 Refrigerant Circuit with Expansion Valve, Pressures and Temperatures“, page 69 .
- Refrigerant Circuit with Restrictor and Reservoir, refer to
⇒ “2.1.14 Refrigerant Circuit with Restrictor and Reservoir, Pressures and Temperatures“, page 71 .

1.4.9 Refrigerant Circuit, Converting R12 to R134a

CFC refrigerants are no longer used in the automotive industry.

Converting refrigerant circuits from R12 refrigerant to R134a refrigerant and servicing converted circuits, refer to Repair Manual: Air conditioner with refrigerant R12 Parts 2 and 3. This repair manual is only available in printed form.

1.4.10 Refrigerant Circuit, Cleaning

Flush refrigerant circuit with refrigerant R 134a. Refer to
⇒ “1.4.13 Refrigerant Circuit Flushing With Refrigerant R134a“, page 32 (or with compressed air and nitrogen, refer to
⇒ “1.4.12 Refrigerant Circuit Flushing With Compressed Air and Nitrogen “, page 29) if:

Downloaded from www.Manualslib.com manuals search engine

– Moisture or dirt has gotten into the refrigerant circuit, for example, after a crash.
– Refrigerant oil is dark and viscous.
– There is too much refrigerant oil in the refrigerant circuit after replacing the compressor.
– The A/C compressor had to be replaced due to internal damage (for example, noises or no output).

Note

When flushing components with compressed air and nitrogen, always extract the gas mixture escaping from the components with suitable extraction units (workshop extraction system).

1.4.11 Refrigerant Circuit, Flushing

Note

- *In the case of vehicles on which the refrigerant pipes have no threads for connection of Adapter set -1785- , use, for example, a flushing gun with rubber end piece or an adapter from the Adapter case for VW/Audi passenger cars -VAS 6338/1- for blowing through the individual components. When using a flushing gun with rubber end piece, take special care not to damage the connections (crushing or scratching).*
- *Evaporator is to be flushed via the connection for low-pressure pipe (large diameter) after removing expansion valve or removing restrictor.*
- *Always flush components in direction opposite to refrigerant flow.*
- *Check expansion valve and replace if dirty or corroded.*
- *Replace any components on which dark, sticky deposits cannot be removed with compressed air. Flush these components using refrigerant R134a or replace.*
- *Thin, light grey deposits on the insides of pipes do not impair the function of the components.*
- *After flushing, always replace receiver or reservoir and restrictor. Replace dryer cartridge on condensers with dryer.*
- *If the reservoir / dryer cartridge is integrated in the condenser, then they cannot be replaced individually and the condenser must be replaced. Refer to the Electronic Parts Catalog (ETKA) and ⇒ Heating, Ventilation and Air Conditioning; Rep. Gr. 87 ; Removal and Installation .*
- *Reservoirs, where it is possible to replace the dryer cartridge, have an additional filter, which must also be replaced with the dryer cartridge.*

Protected by Copyright. Copying or printing of commercial purposes, in part or in whole, is not permitted without the consent of AUDI AG. We do not assume any liability for the correctness and completeness of the contents. Subject to technical changes. © Copyright by AUDI AG.

After Blowing Through The Refrigerant Circuit

– Replace these components depending on equipment (restrictor and reservoir, expansion valve and fluid reservoir or dryer cartridge). Refer to ⇒ Heating, Ventilation and Air Conditioning; Rep. Gr. 87 ; Removal and Installation (vehicle-specific repair manual) and Electronic Parts Catalog (ETKA).
– Replace the A/C compressor, depending on its condition. Refer to ⇒ Heating, Ventilation and Air Conditioning; Rep. Gr. 87 ; Removal and Installation (vehicle-specific repair manual) and Electronic Parts Catalog (ETKA) or drain the rest of the

Downloaded from www.Manualslib.com manuals search engine

refrigerant oil still inside the removed A/C compressor
⇒ “5 Removal and Installation“, page 191 and fill with new refrigerant oil. Refer to
⇒ “3.4 Refrigerant Oil Capacities“, page 119 .

Note

- *There is a defined and prescribed amount of refrigerant oil in the replacement compressor. If the vehicle has two evaporators, then there refrigerant circuit requires a specific quantity of refrigerant oil. Refer to ⇒ Heating, Ventilation and Air Conditioning; Rep. Gr. 87 ; Removal and Installation (vehicle-specific repair manual) and*
  ⇒ “3.4 Refrigerant Oil Capacities“, page 119 .
- *If the A/C compressor is not be replaced, the quantity of refrigerant oil in the A/C compressor must be topped off to the prescribed capacity (tilt the refrigerant oil out and refill the prescribed quantity into the A/C compressor or refrigerant circuit). Refer to ⇒ “5 Removal and Installation“, page 191 and*
  ⇒ “3.4 Refrigerant Oil Capacities“, page 119 .

– Reassemble the refrigerant circuit completely. Refer to ⇒ Heating, Ventilation and Air Conditioning; Rep. Gr. 87 ; Removal and Installation (vehicle-specific repair manual).

– Evacuate and recharge refrigerant circuit according to specification. Refer to
  ⇒ “2.4.11 Evacuating Refrigerant Circuit“, page 89 and
  ⇒ “2.4.3 Charging Refrigerant Circuit“, page 83 .

– Start up A/C system according to specification. Refer to ⇒ Heating, Ventilation and Air Conditioning; Rep. Gr. 87 ; Removal and Installation and
  ⇒ “2.4.1 A/C System, Operating after Charging“, page 79 .

1.4.12 Refrigerant Circuit Flushing With Compressed Air and Nitrogen

Compressed air and nitrogen are to be used in order to force out moisture and other contaminants as well as old refrigerant oil as efficiently as possible, without wasting refrigerant. Clean refrigerant circuit (flush with refrigerant R134a or blow through with compressed air and nitrogen).

Protected by copyright. Copying for private or commercial purposes, in part or in whole, is not permitted unless authorised by AUDI AG. AUDI AG does not guarantee or accept any liability with respect to the correctness of information in this document. Copyright by AUDI AG.

Downloaded from www.Manualslib.com manuals search engine

Note

- *For the most part, blowing through the refrigerant circuit with compressed air and nitrogen requires significantly more work than flushing with refrigerant R134a. As flushing with refrigerant R134a cleans the components more efficiently, always flush in case of a complaint (blowing through should only be used for certain complaints and individual components).*
- *Under certain conditions it may be sufficient to blow through certain components (such as individual refrigerant lines or refrigerant hoses) with compressed air and nitrogen (for purposes of forcing out old refrigerant oil from individual components that were removed).*
- *Certain contaminants cannot or can only be insufficiently removed from the refrigerant circuit with compressed air, these contaminants can be removed, for example by flushing with refrigerant R134a. Refer to* *⇒ "1.4.13 Refrigerant Circuit Flushing With Refrigerant R134a", page 32* .
- *When blowing through, the maximum work pressure of 15 bar must not be exceeded (corresponding to pressure that is reached in a filled refrigerant circuit with an ambient temperature of approximately 60° C, if necessary use pressure reducer also for compressed air).*

WARNING

- ***Nitrogen can leak uncontrolled from the cylinder.***
- ***Make exclusive use of pressure reducers for nitrogen cylinders (maximum work pressure 15 bar).***
- ***Use appropriate extraction units to draw off gas mixture escaping from components.***

– Always flush components in direction opposite to refrigerant flow.

Note

Restrictor, expansion valve, compressor, receiver and reservoir cannot be flushed with compressed air and nitrogen.

– Remove dryer cartridge on condensers with dryer.

Note

- *If the reservoir / dryer cartridge is integrated in the condenser, then they cannot be replaced individually and the condenser must be replaced.*
- *Reservoirs, where it is possible to replace the dryer cartridge, have an additional filter, which must also be replaced with the dryer cartridge.*

Protected by copyright. Copying for private or commercial purposes, in part or in whole, is not permitted unless authorised by AUDI AG. AUDI AG does not guarantee or accept any liability with respect to the correctness of information in this document. Copyright by AUDI AG.

– First flush out old refrigerant oil and dirt using compressed air and then use nitrogen to remove component moisture.

– Adapter for sealing off the pressure hose to the refrigerant circuit, refer to ⇒ "2.4 A/C Service Station", page 79 .

Downloaded from www.Manualslib.com manuals search engine

Note the following points to prevent oil and moisture from entering the refrigerant circuit from the compressed air system.

– The compressed air must be routed through a compressed air purifier for cleaning and drying. Use is therefore to be made of filter and dryer for compressed air (included in scope of delivery as tool for painting work). Refer to Special Tools and Equipment catalog.

– On refrigerant lines with thread or union nut on the connection, use adapter from Adapter set -V.A.G 1785- (Adapter -V.A.G 1785/1- to Adapter -V.A.G 1785/8-) to connect charge hoses 5/8" -18 UNF (a section of this adapter is also contained in the VW/Audi passenger vehicle set adapter chest -VAS 6338/1-).

– On refrigerant lines without thread or union nut on the connection (for connecting adapters), use adapter from VW/Audi passenger vehicle set adapter chest -VAS 6338/1- or a standard blower pistol with rubber mouthpiece.

Protected by copyright. Copying for private or commercial purposes, in part or in whole, is not permitted unless authorised by AUDI AG. AUDI AG does not guarantee or accept any liability with respect to the correctness of information in this document. Copyright by AUDI AG.

Note

- *Only blow through refrigerant circuit with compressed air and then with nitrogen if there is no possibility of flushing the refrigerant circuit or the amount of work to flush individual components becomes excessive (such as minor contaminants and moisture can also be blown out of the refrigerant lines in a short period of time).*
- *Compressed air/nitrogen emerging from components is to be drawn off by way of an appropriate system (such as workshop extraction system).*

The circuit (or individual components) must be blown through (if there is no possibility for flushing or flushing is not recommended)

– In the event dirt or other contaminants are located in individual components of the circuit.

– If vacuum reading is not maintained on evacuating a leak-free refrigerant circuit (pressure build-up due to moisture in refrigerant circuit).

– If refrigerant circuit has been left open for longer than normal (such as following an accident).

– Pressure and temperature measurements in the refrigerant circuit indicate the likelihood of moisture.

– In the event of doubt about the amount of refrigerant oil in the circuit.

– The A/C compressor had to be replaced on account of internal damage (such as noise or no output).

– If stipulated by the vehicle-specific repair manual following replacement of certain components.

Note

Certain contaminants and old refrigerant oil cannot or can only be insufficiently removed from the refrigerant circuit with compressed air, these contaminants can be removed, for example by flushing with refrigerant R134a. Refer to
⇒ "1.4.13 Refrigerant Circuit Flushing With Refrigerant R134a", page 32 .

- Refrigerant Circuit, flushing, refer to
⇒ "1.4.11 Refrigerant Circuit, Flushing", page 28 .

Downloaded from www.Manualslib.com manuals search engine

1.4.13 Refrigerant Circuit Flushing With Refrigerant R134a

Caution

- *If it is suspected that chemicals were added to the refrigerant circuit to seal leaks, chemical substances to seal leaks in the refrigerant circuit (leak stop additive), do not connect the A/C service station and do not extract the refrigerant.*
- *Chemicals that seal leaks in the coolant circuit form deposits that affect the function of the A/C system and lead to failure of the A/C system and the A/C service station.*
- *Inform that customer that there are substances in the A/C system that are no approved by Volkswagen.*

Protected by copyright. Copying for private or commercial purposes, in part or in whole, is not permitted unless authorised by AUDI AG. AUDI AG does not guarantee or accept any liability with respect to the correctness of information in this document. Copyright by AUDI AG.

Note

- *Audi does not approve the use of chemicals to seal leaks in the refrigerant circuit (leak stop additives).*
- *Chemical materials to seal leaks in the refrigerant circuit react with air or the moisture in the air and form deposits in the refrigerant circuit and the A/C service station that lead to malfunctions in the valves and other components that come into contact with such chemicals. These deposits cannot be removed completely from the components, even by flushing. It is only possible to service the refrigerant circuit by replacing all the components which come in contact with this material.*
- *It is not possible to recognize chemical substances to seal leaks in the refrigerant circuit (leak stop additive) and the label that is supposed to come with them is usually not there. Therefore be careful when working with if you do not know its service history.*

- Refrigerant circuit must be flushed with refrigerant R134a in order to force out moisture and other contaminants as well as old refrigerant oil as efficiently as possible, without wasting refrigerant, without the need for extensive assembly work and without endangering the environment.

Flush The Refrigerant Circuit

- In the event of dirt or other contamination in the circuit.
- If vacuum reading is not maintained on evacuating a leak-free refrigerant circuit (pressure build-up due to moisture in refrigerant circuit).
- If refrigerant circuit has been left open for longer than normal (such as following an accident).
- Pressure and temperature measurements in the refrigerant circuit indicate the likelihood of moisture.
- In the event of doubt about the amount of refrigerant oil in the circuit.
- The A/C compressor had to be replaced on account of internal damage (such as noise or no output).
- If stipulated by the vehicle-specific repair manual following replacement of certain components.

Downloaded from www.Manualslib.com manuals search engine

Tools Required

- A/C service station with flushing device (on these A/C service stations, the auxiliary function “flush refrigerant circuit“ and the refrigerant circuit flushing device required for it are present on these A/C service stations. Refer to the Special Tools and Equipment Catalog.
- VW/Audi passenger vehicle set adapter chest -VAS 6338/1- . Refer to
⇒ “2.1.2 Adapter for Assembling Flushing Circuit“, page 42
and Special Tools and Equipment Catalog.
-

Note

- *If a A/C service station with flushing device is not available, it is possible to flush the refrigerant circuit with the flushing device available using Refrigerant circuit flushing device , refer to Special Tools and Equipment Catalog, however the flushing must be done manually. Refer to* *⇒ page 37* *.*
- *On vehicles with screw connections on refrigerant circuit, Adapter -V.A.G 1785/7- and Adapter -V.A.G 1785/8- from VW/Audi passenger vehicle set adapter chest -VAS 6338/1- can be used; on vehicles with screw connections at A/C compressor and at reservoir, two Adapters -V.A.G 1785/8- are required.*
- *In VW/Audi passenger vehicle set adapter chest -VAS 6338/1- , there is also a Charge hose -VAS 6338/31- with connections 5/8 -18 UNF and large inner diameter in short version (commercially available).*

Reproduction or copying, for private or commercial purposes, in part or in whole, is not permitted without the consent of AUDI AG. AUDI AG does not guarantee or accept any liability with respect to the correctness of information in this document. Copyright by AUDI AG.

Preparation

– Discharge refrigerant circuit. Refer to
⇒ “2.4.9 Draining Refrigerant Circuit“, page 87 .

– Remove the A/C compressor. Refer to ⇒ Heating, Ventilation and Air Conditioning; Rep. Gr. 87 ; Removal and Installation (vehicle-specific repair manual).

On a vehicle with restrictor and reservoir

– Remove restrictor (vehicle-specific) and reconnect lines. Refer to ⇒ Heating, Ventilation and Air Conditioning; Rep. Gr. 87 ; Removal and Installation (vehicle-specific repair manual).

– Remove reservoir (vehicle-specific) and reconnect the lines (use adapters and Fill hose -VAS 6338/31- from the Adapter case for VW/Audi passenger cars -VAS 6338/1-). Refer to
⇒ “2.1.2 Adapter for Assembling Flushing Circuit“, page 42 , ⇒ Heating, Ventilation and Air Conditioning; Rep. Gr. 87 ; Removal and Installation (vehicle-specific repair manual).

Note

The reservoir could be flushed but because of its large internal volume it will take too much refrigerant, the reservoir would ice-up too much when extracting the refrigerant, the refrigerant would evaporate too slowly and extraction would be extended too much.

On a vehicle with expansion valve and fluid reservoir

– Remove fluid reservoir (vehicle-specific) and reconnect the lines (use adapters and Fill hose -VAS 6338/31- from the Adapter case for VW/Audi passenger cars -VAS 6338/1-).

Downloaded from www.Manualslib.com manuals search engine

Refer to
⇒ "2.1.2 Adapter for Assembling Flushing Circuit", page 42 , ⇒ Heating, Ventilation and Air Conditioning; Rep. Gr. 87 ; Removal and Installation (vehicle-specific repair manual).

Note

- *The fluid reservoir can be flushed depending on the version (remove dryer cartridge if necessary). Refer to ⇒ "2.1.2 Adapter for Assembling Flushing Circuit", page 42 , ⇒ Heating, Ventilation and Air Conditioning; Rep. Gr. 87 ; Removal and Installation (vehicle-specific repair manual).*
- *The fluid reservoir connected to the condenser (such as on model Audi A3 from model year 2004) remains installed during flushing (it can be flushed due to its design and is only replaced after flushing). Refer to ⇒ "2.1.2 Adapter for Assembling Flushing Circuit", page 42 and ⇒ Heating, Ventilation and Air Conditioning; Rep. Gr. 87 ; Removal and Installation (vehicle-specific repair manual).*
- *If the reservoir / dryer cartridge is integrated in the condenser, then they cannot be replaced individually or are not available as a single part, and the condenser must be replaced. Replace the condenser with the reservoir on these vehicles. Refer to ⇒ Heating, Ventilation and Air Conditioning; Rep. Gr. 87 ; Removal and Installation and Electronic Parts Catalog (ETKA).*
- *Reservoirs, where it is possible to replace the dryer cartridge, have an additional filter, which must also be replaced with the dryer cartridge.*

Protected by copyright. Copying for private or commercial purposes, in part or in whole, is not permitted unless authorised by AUDI AG. AUDI AG does not guarantee or accept any liability with respect to the correctness of information in this document. Copyright by AUDI AG.

– Remove dryer cartridge from vehicles with dryer partridge in fluid reservoir that is connected to the condenser (vehicle-specific), and seal opening on fluid reservoir. Refer to ⇒ Heating, Ventilation and Air Conditioning; Rep. Gr. 87 ; Removal and Installation (vehicle-specific repair manual).

– Remove expansion valve (vehicle-specific) and install one adapter from the Adapter case for VW/Audi passenger cars - VAS 6338/1- . Refer to
⇒ "2.1.2 Adapter for Assembling Flushing Circuit", page 42 , ⇒ Heating, Ventilation and Air Conditioning; Rep. Gr. 87 ; Removal and Installation (vehicle-specific repair manual).

Note

If there is no adapter suitable for the expansion valve in the VW/Audi passenger vehicle set adapter chest -VAS 6338/1- , the removed expansion valve can also be drilled open (the old expansion valve must be replaced in most cases and is therefore no longer required).

Caution

- ***Make sure the sealing surfaces on the expansion valve are not damaged when drilling open.***
- ***Refrigerant will leak out if the sealing surface gets damaged.***

Downloaded from www.Manualslib.com manuals search engine

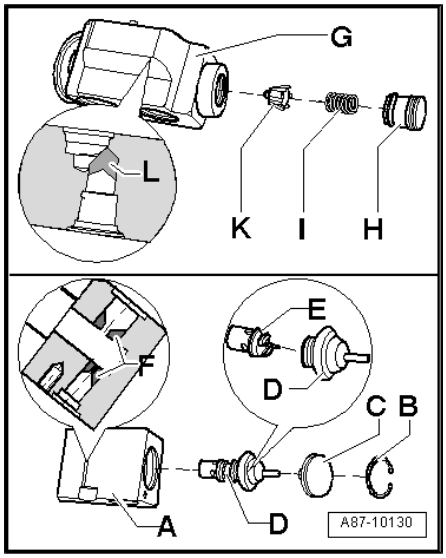

Note

- *Before drilling open, remove the regulating element and drill open the expansion valve using a suitable drill (drill bit diameter 6.0 mm).*
- *Several components are to be removed from expansion valve before drilling open.*
- *Expansion valves are available in various versions and with different constructions. For version -A-, for example, parts -B-, -C- and -D- must be removed. Then separate part -E- (regulating element) from component -D-. Then drill open expansion valve in area -F- using a suitable drill.*
- *For version -G-, for example parts -H-, -I- and -K- must be removed and then drill open area -L- using a suitable drill.*

– Clean the drilled open expansion valve of residue from the work (shavings).

– Install parts -B-, -C- and -D- for version -A- or -H- for version -G-.

Note

On vehicles with two evaporators, disconnect second evaporator circuit from first evaporator circuit and flush separately. Refer to ⇒ "2.1.2 Adapter for Assembling Flushing Circuit", page 42 and⇒ Heating, Ventilation and Air Conditioning; Rep. Gr. 87 ; Removal and Installation (vehicle-specific repair manual).

Flushing

– Check refrigerant quantity in the A/C service station, there must be at least 7 kg of refrigerant R134a.

Note

If necessary, switch on heating installed in service station for the refrigerant container before first flushing (to increase the pressure in the refrigerant container) and switch off before first extraction during flushing.

Protected by copyright. Copying for private or commercial purposes, in part or in whole, is not permitted unless authorised by AUDI AG. AUDI AG does not guarantee or accept any liability with respect to the correctness of information in this document. Copyright by AUDI AG.

– Drain the old oil container of the A/C service station

– Connect the supply hose (high pressure side) of A/C service station to the low pressure line leading to the A/C compressor (line with larger diameter) using an adapter. Refer to ⇒ "2.1.2 Adapter for Assembling Flushing Circuit", page 42 .

– Connect return hose (low pressure- or intake side) of A/C service station to output of refrigerant circuit flushing device.

– Connect the input on the refrigerant circuit flushing device to the high pressure line leading to the A/C compressor (line with smaller diameter) using an adapter. Refer to ⇒ "2.1.2 Adapter for Assembling Flushing Circuit", page 42 .

Downloaded from www.Manualslib.com manuals search engine

Note

- *Components are always flushed in the opposite direction of refrigerant flow when A/C system is in operation. Refer to* *⇒ "2.1.9 Flushing Circuit Block Diagrams", page 63* *.*
- *While flushing, contaminants from the refrigerant circuit enter the refrigerant circuit flushing device and the A/C service station and are absorbed by the filters and dryers installed there. Depending on the contaminant, these components are to be replaced in shorter intervals in line with operating instructions for A/C service station or refrigerant circuit flushing device.*
- *The filter in the refrigerant circuit flushing device depends on the type and degree of contamination in the flushed refrigerant circuit, it should be changed after 5 to 10 flushing cycles (flushed vehicles) at the latest. If a heavily contaminated refrigerant circuit is flushed (the refrigerant oil from the circuit is black and viscous or there are many shavings in the refrigerant circuit), the filter should be replaced after flushing. With a refrigerant circuit heavily contaminated in this way, it is wise to flush the circuit again after changing the filter.*
- *Depending on the type of contamination, dirt (old refrigerant oil and abraded material from A/C compressor) is deposited on the viewing glass. Clean this viewing glass if necessary after flushing and flush the refrigerant circuit once more with a flushing operation as a test (one completed cycle is sufficient).*
- *Liquid refrigerant cannot be led through the expansion valve, restrictor and dryer bag of certain fluid reservoirs at an appropriate speed, therefore these components must be removed and replaced by adapters if necessary. Refer to ⇒ Heating, Ventilation and Air Conditioning; Rep. Gr. 87 ; Removal and Installation (vehicle-specific repair manual).*
- *Adapters for connecting A/C service station and for bridging certain components of refrigerant circuit, refer to* *⇒ "2.1.2 Adapter for Assembling Flushing Circuit", page 42* *.*

Protected by copyright. Copying for private or commercial purposes, in part or in whole, is not permitted unless authorised by AUDI AG. AUDI AG does not guarantee or accept any liability with respect to the correctness of information in this document. Copyright by AUDI AG.

– Switch on A/C service station and flush refrigerant circuit (duration approximately 1 to 1.5 hours for one flushing cycle with three flushing operations).

Downloaded from www.Manualslib.com manuals search engine

Note

- *Perform flushing procedure according to operating instructions of the A/C service station.*
- *Depending on version of A/C service station, old oil container holds only approximately 125 cm ^{3} refrigerant oil, in the event a system with a larger quantity of refrigerant oil must be flushed, it may be necessary to drain the old oil container after the first flushing process of one flushing cycle.*
- *Observe the refrigerant which flows back into the A/C service station from the refrigerant circuit, only when the refrigerant streams clear and completely colorless through the viewing glass of refrigerant circuit flushing device into the A/C service station is the refrigerant circuit cleaned.*
- *While flushing, all the refrigerant oil is washed out of the refrigerant circuit (up to a very small amount, for example, in the evaporator, however this can be disregarded).*
- *If contamination is especially severe, it may be necessary to perform the flushing procedure twice (two flushing cycles with three flushing operations each).*

Copyright by AUDI AG. Reproduction for commercial purposes, in part or in whole, is not permitted unless authorised by AUDI AG. AUDI AG does not guarantee or accept any liability with respect to the correctness of information in this document. Copyright by AUDI AG.

Sequence of Flushing Procedure (sequence occurs automatically according to the A/C service station program)

- After switching on, the flushing circuit (refrigerant circuit with connecting hoses and flushing equipment for refrigerant circuits) is evacuated first and the refrigerant circuit is checked for leaks during this. (depending on A/C service station version, it is possible that manually switching to advance the program is required).
- A prescribed quantity of refrigerant (such as 5 kg) is filled into the evacuated refrigerant circuit via the high pressure side of the A/C service station (in opposite direction of normal flow when A/C system is in operation and also on the low pressure side of the vehicle refrigerant circuit), or, as much refrigerant is filled until refrigerant circuit and viewing glasses of refrigerant circuit flushing device are completely filled with fluid refrigerant (depending on version of A/C service station, recognized, that is, that refrigerant no longer flows from behind over a certain time period).
- After the prescribed quantity of refrigerant has been filled, for example, the heater for the refrigerant circuit flushing device is switched on (only in the event the refrigerant is extracted in gaseous form from the refrigerant circuit flushing device), depending on version of A/C service station and refrigerant circuit flushing device.
- After the refrigerant was extracted, the heating of the flushing device for refrigerant circuits is switched off (if present), it may occur that the refrigerant circuit is shortly evacuated again, depending on its version. After evacuation, the refrigerant extracted from the refrigerant circuit is deposited by the service station.
- The sequence of filling refrigerant, extracting (and evacuating) is repeated twice (performed a total of three times).
- After the third extraction, the flushing circuit is evacuated depending on the version of the A/C service station.

Downloaded from www.Manualslib.com manuals search engine

– After the flushing procedure has ended, check the viewing glass(es) of refrigerant circuit flushing device, if they are soiled, clean them if necessary according to operating instructions of the refrigerant circuit flushing device or of the A/C service station and perform the flushing procedure once more as a test (one cycle is sufficient, duration approximately 30 min.)

– Check pressure in refrigerant circuit, there must be no positive pressure in the refrigerant circuit (evacuate briefly once more if necessary).

– Disconnect connections to A/C service station from vehicle refrigerant circuit (there must be no positive pressure in the refrigerant circuit).

– Replace these components depending on equipment (restrictor and reservoir, expansion valve and fluid reservoir or dryer cartridge inside the reservoir). Refer to ⇒ Heating, Ventilation and Air Conditioning; Rep. Gr. 87 ; Removal and Installation (vehicle-specific repair manual) and Electronic Parts Catalog (ETKA).

– Replace the A/C compressor, depending on its condition, refer to ⇒ Heating, Ventilation and Air Conditioning; Rep. Gr. 87 ; Removal and Installation (vehicle-specific repair manual) and Electronic Parts Catalog (ETKA) or drain the rest of the refrigerant oil still inside the removed A/C compressor, refer to ⇒ “5 Removal and Installation“, page 191 and fill new refrigerant oil. Refer to ⇒ “3.4 Refrigerant Oil Capacities“, page 119 .

Note

- *There is a defined and prescribed amount of refrigerant oil in the replacement compressor. If the vehicle has two evaporators, then there refrigerant circuit requires a specific quantity of refrigerant oil. Refer to ⇒ Heating, Ventilation and Air Conditioning; Rep. Gr. 87 ; Removal and Installation (vehicle-specific repair manual) and* *⇒ “3.4 Refrigerant Oil Capacities“, page 119* *.*
- *If the A/C compressor is not be replaced, the quantity of refrigerant oil in the A/C compressor must be topped off to the prescribed capacity (tilt the refrigerant oil out and refill the prescribed quantity into the A/C compressor or refrigerant circuit). Refer to* *⇒ “5 Removal and Installation“, page 191* *and* *⇒ “3.4 Refrigerant Oil Capacities“, page 119* *.*

Protected by copyright. Copying for private or commercial purposes, in part or in whole, is not permitted unless authorized by AUDI AG. AUDI AG does not guarantee or accept any liability with respect to the correctness of information in this document. Copyright by AUDI AG.

– Reassemble the refrigerant circuit completely. Refer to ⇒ Heating, Ventilation and Air Conditioning; Rep. Gr. 87 ; Removal and Installation (vehicle-specific repair manual).

– Evacuate and recharge refrigerant circuit according to specification. Refer to ⇒ “2.4.11 Evacuating Refrigerant Circuit“, page 89 and ⇒ “2.4.3 Charging Refrigerant Circuit“, page 83 .

– Start up A/C system according to specification. Refer to ⇒ Heating, Ventilation and Air Conditioning; Rep. Gr. 87 ; Removal and Installation and ⇒ “2.4.1 A/C System, Operating after Charging“, page 79 .

- Flushing Circuit Block Diagrams, refer to ⇒ “2.1.9 Flushing Circuit Block Diagrams“, page 63 .
- Adapter for Assembling Flushing Circuit, refer to ⇒ “2.1.2 Adapter for Assembling Flushing Circuit“, page 42 .

Downloaded from www.Manualslib.com manuals search engine

1.4.14 Refrigerant Circuit, Repairing

The purpose of this Repair Manual is to provide foremen and mechanics with the basic knowledge needed to ensure expert working.

Note

Only the careful study of this documentation, practical implementation of the information contained, a training on A/C systems and expert knowledge (with or without certificate) can guarantee expertise in the field of motor vehicle A/C systems.

This document is a compact reference work which should be kept at the workplace. It should also be available for presentation to the responsible supervisory agency on request.

Caution

Non-approved tools or materials such as leak sealing additives can cause damage or malfunctions in the system.

Only use tools and materials approved by the manufacturer.

The warranty is voided if non-approved tools or materials are used.

Additional Information Sources

- Repair manual for model-specific maintenance, refer to ⇒ Heating, Ventilation and Air Conditioning; Rep. Gr. 87 ; General Information (vehicle-specific repair manual) and ⇒ Wiring diagrams, Troubleshooting & Component locations.
- Technical Service Handbook outlining action to be taken to rectify current problems.
- Self-Study Program, for example, Self Study Program No. 208; Vehicle A/C Systems.
- Video programs for in-dealership training.
- For the special tools and equipment needed to service the A/C system, refer to Special Tools and Equipment Catalog.
- Service Organization Volume 1 Additional Equipment Audi ServiceNet, Handbooks.
- Repair manual Air conditioner with refrigerant R12 (for vehicles manufactured up to MY 1993 this repair manual is only available in hard copy).

1.4.15 Switches and Sensors

Protected by copyright. Copying for private or commercial purposes, in part or in whole, is not permitted unless authorised by AUDI AG. AUDI AG does not guarantee or accept any liability with respect to the correctness of information in this document. Copyright by AUDI AG.

Note

Switch pressures, removing and installing switches as well as switch arrangement and version, refer to vehicle specific refrigerant circuit. Refer to ⇒ Heating, Ventilation and Air Conditioning; Rep. Gr. 87 ; Removal and Installation (vehicle-specific repair manual).

Downloaded from www.Manualslib.com manuals search engine

Protected by copyright. Copying for private or commercial purposes, in part or in whole, is not permitted unless authorised by AUDI AG. AUDI AG does not guarantee or accept any liability with respect to the correctness of information in this document. Copyright by AUDI AG.

Downloaded from www.Manualslib.com manuals search engine

2 Description and Operation

⇒ “2.1 Refrigerant Circuit“, page 41

⇒ “2.2 Switches and Sensors on Refrigerant Circuit and Connections “, page 74

⇒ “2.3 Electrical Components Not on Refrigerant Circuit“, page 78

⇒ “2.4 A/C Service Station“, page 79

2.1 Refrigerant Circuit

⇒ “2.1.1 A/C Compressor“, page 41

⇒ “2.1.2 Adapter for Assembling Flushing Circuit“, page 42

⇒ “2.1.3 Condenser“, page 58

⇒ “2.1.4 Connections with Schrader Valve“, page 58

⇒ “2.1.5 Connections with Primary Sealing Valve (Ball Valve)“, page 59

⇒ “2.1.6 Evaporator“, page 60

⇒ “2.1.7 Expansion Valve“, page 61

⇒ “2.1.8 Fluid Reservoir“, page 62

⇒ “2.1.9 Flushing Circuit Block Diagrams“, page 63

⇒ “2.1.10 O-Ring Seals“, page 68

⇒ “2.1.11 Pressure Relief Valve“, page 68

⇒ “2.1.12 Refrigerant Circuit Components, High and Low Pressure Sides“, page 68

⇒ “2.1.13 Refrigerant Circuit with Expansion Valve, Pressures and Temperatures“, page 69

⇒ “2.1.14 Refrigerant Circuit with Restrictor and Reservoir, Pressures and Temperatures“, page 71

⇒ “2.1.15 Refrigerant Pipe With Inner Heat Exchanger“, page 73

⇒ “2.1.16 Reservoir“, page 73

⇒ “2.1.17 Restrictor“, page 74

2.1.1 A/C Compressor

The A/C compressor is driven by a ribbed belt or a input shaft, which is driven by the vehicle engine.

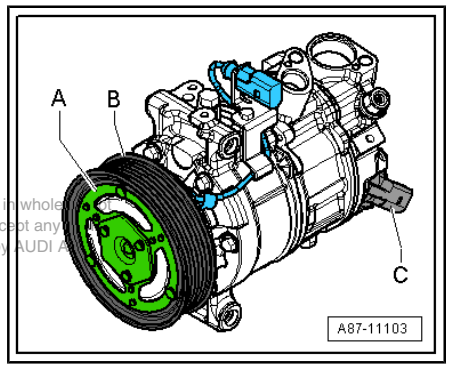

A/C Compressor with Magnetic Clutch

- An electromagnetic clutch -A- attached to A/C compressor provides the power link between the ribbed belt pulley -B- and A/C compressor crankshaft with A/C system switched on.
- An overload safeguard attached to the clutch plate or in the A/C compressor solenoid coil is tripped if the compressor does not move freely, thus protecting the belt drive against overload.

Protected by copyright. Copying for private or commercial purposes, in part or in whole, is not permitted unless authorised by AUDI AG. AUDI AG does not guarantee or accept any liability with respect to the correctness of information in this document. Copyright by AUDI AG.

A/C Compressor without Magnetic Clutch

- An overload safeguard attached to the pulley of the compressor -B- is tripped if the compressor does not move freely, thus protecting the belt drive against overload.

Downloaded from www.Manualslib.com manuals search engine

All A/C compressors

The A/C compressor extracts the refrigerant gas from the evaporator, compresses it and relays it to the condenser.

Note

- *The A/C compressor contains refrigerant oil, which can be mixed with refrigerant R134a under any temperature.*
- *The type plate lists the type of refrigerant required for the A/C compressor. A regulator valve regulates pressure within the specified range (control characteristics) on the low pressure side.*
- *A/C compressors with or without a magnetic clutch are currently controlled externally by a regulator valve -C-.*
- *On A/C compressors without an A/C clutch, the engine is only to be started following complete assembly of the refrigerant circuit.*
- *So that the A/C compressor does not get damaged when the refrigerant circuit is empty, the A/C clutch is turned off and the A/C compressor regulator valve -N280- is no longer activated (A/C compressor runs at idle with engine).*
- *If the refrigerant circuit is empty, a A/C compressor without A/C clutch -N25- with (A/C compressor regulator valve -N280-) is switched to internal lubrication by way of a valve.*
- *Depending on the A/C compressor version, there may be a valve installed on the high pressure side of the A/C compressor, which prevents the liquid refrigerant from flowing back into the compressor once the A/C is turned off. If an A/C compressor with this valve is installed in a vehicle with a refrigerant circuit having an expansion valve, then it may take some time until the pressure in the high pressure side decreases (the expansion is cold and the pressure in the low pressure side quickly increases after it is turned off, the expansion valve closes and the refrigerant flows slowly into the low pressure side). If the A/C compressor is switched on, the pressure on the low pressure side goes down, the expansion valve open and the refrigerant can flow of the low pressure side.*
- *The electro-magnetic clutch -A- is activated only when the regulator valve -C- is activated on an A/C compressor with an electro-magnetic clutch -A- and with a regulator valve -C-,. Refer to ⇒ Heating, Ventilation and Air Conditioning; Rep. Gr. 87 ; General Information .*

2.1.2 Adapter for Assembling Flushing Circuit

This document is copyright protected and provided for personal use only. Any other use, in whole, is not permitted unless authorised by AUDI AG. AUDI AG does not guarantee or accept any liability with respect to the accuracy or completeness of the information in this document. Copyright by AUDI AG.

- Various adapters which are required to connect the A/C service station to the refrigerant circuit for flushing and to bridge the removed fluid reservoir or reservoir and expansion valve (specific to vehicle) are in the following table.
- Using a charge hose with 5/8 -18 UNF connections (short version, for example, Charge hose -VAS 6338/31-), connect the two adapters (contained in VW/Audi passenger vehicle set adapter chest -VAS 6338/1-) which have been installed for the removed reservoir or fluid reservoir.
- If a flushed refrigerant circuit is not reassembled immediately after flushing, adapters remain at connections and seal the connections at the adapters using Shipping caps -VAS 6338/30- (from Adapter case for VW/Audi passenger cars -VAS 6338/1-).

Downloaded from www.Manualslib.com manuals search engine

- Depending on the version of the compressor and time period of production, different connection and sealing techniques can be found for the refrigerant circuit. Refer to ⇒ Heating, Ventilation and Air Conditioning; Rep. Gr. 87 ; Removal and Installation .
- Beginning the production year 2006, the name of the Zexel A/C compressor was changed from Zexel to Valeo.

Block or screw connections

– Screw connection -A-

– Block connection -B-

Block connections with different types of seals

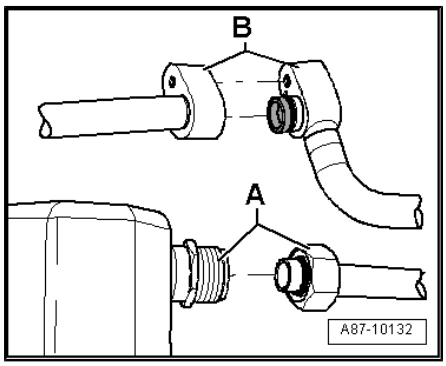

Protected by copyright. Copying for private or commercial purposes, in part or in whole, is not permitted unless authorised by AUDI AG. AUDI AG does not guarantee or accept any liability with respect to the correctness of information in this document. Copyright by AUDI AG.

Downloaded from www.Manualslib.com manuals search engine

– Block connection with radially sealed connection -A- (with plastic or metal guide -B-)

– Block connection with axial sealing connection -C-

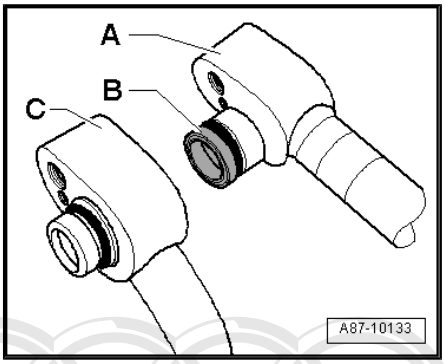

Audi A1 and Audi A2

Vehicle	Required Adapters For The Connectors To A/C Compressor	Adapters Necessary For The Connections To The Reservoir Or Fluid Reservoir	Other
Audi A1 (8X_) from MY 11	– Compressor manufacturer Denso , Sanden or Delphi ◆ Low pressure side adapter -VAS 6338/12- ◆ High pressure side adapter -VAS 6338/3- or adapter -VAS 6338/2- (depending on the version of the A/C compressor and its refrigerant line)	Different versions – Version 1 (the fluid reservoir is integrated on the condenser): the adapter is not needed, the dryer bag is removed form the fluid reservoir on the condenser and opening is closed again for flushing. – Version 2 (fluid reservoir attached to the condenser): the adapter is not needed, the fluid reservoir remains installed (it will be replaced after flushing)	The expansion valve is removed and the Adapter -VAS 6338/34- is installed (or the removed expansion valve is drilled for flushing and installed again). ⇒ page 34
Audi A2 (8Z_) from MY 01	– Compressor manufacturer Denso ◆ Low pressure side adapter -VAS 6338/12- ◆ High pressure side adapter -VAS 6338/2-	Reservoir – Threaded connection at input adapter -VAS 6338/9- – Block connection with axial sealing at output adapter -VAS 6338/10-	- Restrictor removed, connections reconnected

Protected by copyright. Copying for private or commercial purposes, in part or in whole, is not permitted unless authorised by AUDI AG. AUDI AG does not guarantee or accept any liability with respect to the correctness of information in this document. Copyright by AUDI AG.

Note

The reservoir may be attached to or integrated in the condenser on the Audi A1, depending on the version of the condenser. A dryer cartridge is installed in the integrated fluid reservoir and can be replaced separately. After flushing, the attached fluid reservoir (introduction still open) must be replaced after the flushing. Refer to Electronic Parts Catalog (ETKA) and ⇒ Heating, Ventilation and Air Conditioning; Rep. Gr. 87 ; Removal and Installation .

Downloaded from www.Manualslib.com manuals search engine

Audi A3 and Audi TT

Vehicle	Required Adapters For The Connectors To A/C Compressor	Adapters Necessary For The Connections To The Reservoir Or Fluid Reservoir	Other
Audi A3 (8L_) from MY 97 Audi TT (8N_) from MY 99	– Compressor manufacturer Sanden or Zexel / Valeo ◆ Low pressure side Adapter -VAS 6338/7- ◆ High pressure side Adapter -VAS 6338/2-	Fluid Reservoir – Block connections with axial sealing at input and output Adapter -VAS 6338/2- (necessary 2 times)	Expansion valve removed and Adapter -VAS 6338/19- installed (or drilled expansion valve, e.g. 6N0 820 679 C installed ⇒ page 34)
Audi A3 (8P_) from MY 04 Audi TT (8J_) from MY 07	– A/C compressor manufacturer for the Audi TT Denso ◆ Low pressure side Adapter -VAS 6338/12- ◆ High pressure side Adapter -VAS 6338/3-	Reservoir (different versions) – No adapter needed, the receiver remains installed – Depending on the condenser version, remove the dryer cartridge from the reservoir on the condenser before flushing and then seal the opening again (see note).	Expansion valve removed and Adapter -VAS 6338/18- installed (or drilled expansion valve, e.g. 1K0 820 679 installed ⇒ page 34)

Protected by copyright. Copying for private or commercial purposes, in part or in whole, is not permitted unless authorised by AUDI AG. AUDI AG does not guarantee or accept any liability with respect to the correctness of information in this document. Copyright by AUDI AG.

Note

- *The version of the reservoir on the Audi A3 and the Audi TT will different depending on the manufacturer of the condenser. An Audi TT with a 5-cylinder engine has a condenser in a different version than on a model with a 4- or 6-cylinder engine. The reservoir is, for example, inside the condenser. If the integrated reservoir has a dryer cartridge, which is no longer available as a single part. If there are complaints, then it is necessary to replace the complete condenser. Refer to the Electronic Parts Catalog and ⇒ Heating, Ventilation and Air Conditioning; Rep. Gr. 87 ; Removal and Installation .*
- *If the reservoir / dryer cartridge is integrated in the condensor, then they cannot be replaced individually or are not available as a single part, and the condenser must be replaced. Refer to ⇒ Heating, Ventilation and Air Conditioning; Rep. Gr. 87 ; Removal and Installation and Electronic Parts Catalog (ETKA).*

Downloaded from www.Manualslib.com manuals search engine

Audi 80 , Audi 90, Audi Coupe, Audi Cabriolet and Audi A4

Vehicle	Required Adapters For The Connectors To A/C Compressor	Adapters Necessary For The Connections To The Accumulator	Other
Audi 80 (8A_/ 8C_), Audi Coupe (8B_), Audi Cabriolet (8G_) through MY 02 Audi A4 (8D_) from MY 1995	– Compressor manufacturer Zexel / Valeo (threaded connections) ◆ Low pressure side Adapter - VAG 1785/8- ◆ High pressure side Adapter - VAG 1785/7-	Accumulator with various versions of connections ◆ Version 1 – Threaded connection at input Adapter -VAS 6338/9- – Threaded connection at output Adapter -VAG 1785/8-	- Restrictor removed, connections reconnected
	– Compressor manufacturer Denso (block connections with radial and axial sealing) ◆ Low pressure side Adapter - VAS 6338/12- ◆ High pressure side Adapter -VAS 6338/2-	◆ Version 2 – Threaded connection at input Adapter -VAS 6338/9- – Block connection with axial sealing at output Adapter - VAS 6338/10-	
Audi A4 (8E_) from MY 01 Audi A4 Cabriolet (8H_) from MY 03	– Compressor manufacturer Denso (block connections with radial and axial sealing) ◆ Low pressure side Adapter - VAS 6338/12- ◆ High pressure side Adapter -VAS 6338/2-	Accumulator with various versions of connections ◆ Version 1 – Block connections with axial sealing at input and output ◆ Adapter -VAS 6338/10- (2x needed)	- Restrictor removed, connections reconnected

Protected by copyright. Copying for private or commercial purposes, in part or in whole, is not permitted unless authorised by AUDI AG. AUDI AG does not guarantee or accept any liability with respect to the correctness of information in this document. Copyright by AUDI AG.

Downloaded from www.Manualslib.com manuals search engine

Vehicle	Required Adapters For The Connectors To A/C Compressor	Adapters Necessary For The Connections To The Accumulator	Other
	– A/C compressor manufacturer "Denso" (block connections with radial sealing). Refer to ⇒ Heating, Ventilation and Air Conditioning; Rep. Gr. 87 ; Removal and Installation (vehicle-specific repair manual). ◆ Low pressure side Adapter -VAS 6338/12- ◆ High pressure side Adapter -VAS 6338/3-	◆ Version 2 – Block connections with radial sealing at input and output ◆ Adapter -VAS 6338/8- (2x needed)	
Audi A4 (8K_) from MY 08	– Compressor manufacturer Denso ◆ Low pressure side Adapter -VAS 6338/12- ◆ High pressure side Adapter -VAS 6338/3-	Reservoir (different versions) – No adapter needed, the receiver remains installed – Depending on the condenser version, remove the dryer cartridge from the reservoir on the condenser before flushing and then seal the opening again (see note).	Expansion valve removed and Adapter -VAS 6338/36- installed (or drilled expansion valve, e.g. 1K0 820 679 A installed ⇒ page 34) – The refrigerant line with the inner heat exchanger remains installed or will be installed after installing the adapter.

Protected by copyright. Copying for private or commercial purposes, in part or in whole, is not permitted unless authorised by AUDI AG. AUDI AG does not guarantee or accept any liability with respect to the correctness of information in this document. Copyright by AUDI AG.

Downloaded from www.Manualslib.com manuals search engine

Note

- *The reservoir on the Audi A4 (8K_) from MY 2008 has different versions, depending on the depending on the manufacturer. Refer to ⇒ Heating, Ventilation and Air Conditioning; Rep. Gr. 87 ; Removal and Installation . The reservoir may be attached to or integrated in the condenser, depending on the version of the condenser. If the integrated reservoir has a dryer cartridge, which is no longer available as a single part. If there are complaints, then it is necessary to replace the complete condenser. Refer to Electronic Parts Catalog (ETKA).*
- *If the reservoir / dryer cartridge is integrated in the condensor, then they cannot be replaced individually or are not available as a single part, and the condenser must be replaced. Refer to ⇒ Heating, Ventilation and Air Conditioning; Rep. Gr. 87 ; Removal and Installation and Electronic Parts Catalog (ETKA).*

Audi A5 Coupe and Sportback, Audi Q5, Audi A5 Cabriolet

Vehicle	Required Adapters For The Connectors To A/C Compressor	Required Adapters For The Connections To Fluid Reservoir	Other
Audi A5 Coupe and Sportback (8T_) from MY 08 Audi Q5 (8R_) from MY 08 Audi A5 Cabriolet (8F_) from MY 09	– Compressor manufacturer Denso ♦ Low pressure side Adapter -VAS 6338/12- ♦ High pressure side Adapter -VAS 6338/3-	Reservoir (different versions) – No adapter needed, the receiver remains installed – Depending on the condenser version, remove the dryer cartridge from the reservoir on the condenser before flushing and then seal the opening again (see note).	Expansion valve removed and Adapter -VAS 6338/36- installed (or drilled expansion valve, e.g. 1K0 820 679 A installed ⇒ page 34) – The refrigerant line with the inner heat exchanger remains installed or will be installed after installing the adapter.

Protected by copyright. Copying for private or commercial purposes, in part or in whole, is not permitted unless authorised by AUDI AG. AUDI AG does not guarantee or accept any liability with respect to the correctness of information in this document. Copyright by AUDI AG.

Downloaded from www.Manualslib.com manuals search engine

Note

- *There are different versions of the reservoir on these vehicles depending on the manufacturer. Refer to ⇒ Heating, Ventilation and Air Conditioning; Rep. Gr. 87 ; Removal and Installation . The reservoir may be attached to or integrated in the condenser, depending on the version of the condenser. If the integrated reservoir has a dryer cartridge, which is no longer available as a single part. If there are complaints, then it is necessary to replace the complete condenser. Refer to Electronic Parts Catalog (ETKA).*
- *If the reservoir / dryer cartridge is integrated in the condensor, then they cannot be replaced individually or are not available as a single part, and the condenser must be replaced. Refer to ⇒ Heating, Ventilation and Air Conditioning; Rep. Gr. 87 ; Removal and Installation and Electronic Parts Catalog (ETKA).*

Protected by copyright. Copying for private or commercial purposes, in part or in whole, is not permitted unless authorised by AUDI AG. AUDI AG does not guarantee or accept any liability with respect to the correctness of information in this document. Copyright by AUDI AG.

Downloaded from www.Manualslib.com manuals search engine

Audi 100, Audi A6 (4A_, 4B_ und 4F_), Audi Allroad and Audi V8

Vehicle	Required Adapters For The Connectors To A/C Compressor	Adapters Necessary For The Connections To The Accumulator	Other
Audi 100 / Audi A6 (4A_) through MY 1998 Audi A6 (4B_) from MY1998 Audi allroad (4B_) through MY 2005 Audi V8 (4C_) through 1994	– Compressor manufacturer Zexel / Valeo (threaded connections) ◆ Low pressure side Adapter - VAG 1785/8- ◆ High pressure side Adapter - VAG 1785/7-	Accumulator with various versions of connections ◆ Version 1 – Threaded connection at input Adapter -VAS 6338/9- – Threaded connection at output Adapter -VAG 1785/8-	- Restrictor removed, connections reconnected
	– Compressor manufacturer Denso (block connections with radial and axial sealing) ◆ Low pressure side Adapter - VAS 6338/12- ◆ High pressure side Adapter -VAS 6338/2-	◆ Version 2 – Threaded connection at input Adapter -VAS 6338/9- – Block connection with axial sealing at output Adapter - VAS 6338/10- ◆ Version 3 – Block connections with axial sealing at input and output Adapter -VAS 6338/10- (necessary 2 times)	
Audi A6 (4F_) from MY 05	– Compressor manufacturer Denso (block connections with radial sealing) ◆ Low pressure side Adapter - VAS 6338/12- ◆ High pressure side Adapter -VAS 6338/3-	– Accumulator with radially sealed block connections at input and output ◆ Adapter -VAS 6338/8- (2x needed)	- Restrictor removed, connections reconnected

Protected by copyright. Copying for private or commercial purposes, in part or in whole, is not permitted unless authorised by AUDI AG. AUDI AG does not guarantee or accept any liability with respect to the correctness of information in this document. Copyright by AUDI AG.

Note

The specifications for the Audi A6 (4F_) from MY 05 also apply to the Audi S6 and Audi RS6.

Downloaded from www.Manualslib.com manuals search engine

Audi A6 (4G_), Audi A7 (4G_)

Vehicle	Required Adapters For The Connectors To A/C Compressor	Required Adapters For The Connections To Fluid Reservoir	Other
Audi A6 (4G_) from MY 11 Audi A7 (4G_) from MY 11	– Compressor manufacturer Denso ♦ Low pressure side Adapter -VAS 6338/12- ♦ High pressure side Adapter -VAS 6338/3-	Reservoir (different versions) – No adapter needed, the receiver remains installed – Depending on the condenser version, remove the dryer cartridge from the reservoir on the condenser before flushing and then seal the opening again (see note).	The expansion valve is removed and the Adapter -VAS 6338/36- (or the removed expansion valve is drilled for flushing and installed again ⇒ page 34).

Note

- *There are different versions of the reservoir on these vehicles depending on the manufacturer. Refer to ⇒ Heating, Ventilation and Air Conditioning; Rep. Gr. 87 ; Removal and Installation and to the Electronic Parts Catalog (ETKA).*
- *If the reservoir / dryer cartridge is integrated in the condensor, then they cannot be replaced individually or are not available as a single part, and the condenser must be replaced. Refer to ⇒ Heating, Ventilation and Air Conditioning; Rep. Gr. 87 ; Removal and Installation and to the Electronic Parts Catalog (ETKA).*

Protected by copyright. Copying for private or commercial purposes, in part or in whole, is not permitted unless authorised by AUDI AG. AUDI AG does not guarantee or accept any liability with respect to the correctness of information in this document. Copyright by AUDI AG.

Downloaded from www.Manualslib.com manuals search engine

Audi A8

Vehicle	Required Adapters For The Connectors To A/C Compressor	Adapters Necessary For The Connections To The Accumulator	Other
Audi A8 (4D_) from MY 94	– Compressor manufacturer Zexel / Valeo (threaded connections) ◆ Low pressure side Adapter -VAG 1785/8- ◆ High pressure side Adapter -VAG 1785/7-	Accumulator with various versions of connections ◆ Version 1 – Threaded connection at input Adapter -VAS 6338/9- – Threaded connection at output Adapter -VAG 1785/8-	- Restrictor removed, connections reconnected
	– Compressor manufacturer Denso (block connections with radial and axial sealing) ◆ Low pressure side Adapter -VAS 6338/12- ◆ High pressure side Adapter -VAS 6338/2-	◆ Version 2 – Threaded connection at input Adapter -VAS 6338/9- – Block connection with axial sealing at output Adapter -VAS 6338/10- ◆ Version 3 – Block connections with axial sealing at input and output Adapter -VAS 6338/10- (necessary 2 times)	
Audi A8 (4E_) from MY 03	– Compressor manufacturer Denso (block connections with radial sealing) ◆ Low pressure side Adapter -VAS 6338/12- ◆ High pressure side Adapter -VAS 6338/3-	Reservoir – Block connections with radial sealing at input and output ◆ Adapter -VAS 6338/8- (2x needed)	- Restrictor removed, connections reconnected
Audi A8 (4H_) from MY 10	– Compressor manufacturer Denso (block connections with radial sealing) ◆ Low pressure side Adapter -VAS 6338/12- ◆ High pressure side Adapter -VAS 6338/3-	– No adapter required, dryer bag is removed from fluid reservoir on the condenser and the opening is sealed again for flushing.	The expansion valve is removed and the Adapter -VAS 6338/18- (or the removed expansion valve is drilled for flushing and installed again ⇒ page 34).

Protected by copyright. Copying for private or commercial purposes, in part or in whole, is not permitted unless authorised by AUDI AG. AUDI AG does not guarantee or accept any liability with respect to the correctness of information in this document. Copyright by AUDI AG.

Downloaded from www.Manualslib.com manuals search engine

Vehicle	Required Adapters For The Connectors To A/C Compressor	Adapters Necessary For The Connections To The Accumulator	Other
♦ Additional on vehicles with 2 evaporators (4 zone A/C system)		To flush circuit with evaporator in front A/C unit ♦ Adapter -VAS 6338/5- for sealing the low-pressure side connection (to second evaporator) ♦ Adapter -VAS 6338/11- for sealing the high-pressure side connection (to second evaporator) • The adapter may need an additional hole (see below) so that the refrigerant pipes can be covered with the Adapters -VAS 6338/5- and -VAS 6338/11- .	
		To flush the second evaporator and corresponding lines ♦ Adapter -VAS 6338/3- for connecting A/C Service Station to the low-pressure side connection (to second evaporator). ♦ Adapter -VAS 6338/4- for connecting A/C Service Station to the high-pressure side connection (to second evaporator). • It may be necessary to rework the adapter (see below) so that the refrigerant pipe can be attached to the Adapter -VAS 6338/3- .	The expansion valve in the refrigerant pipes and for the second evaporator is removed and the Adapter -VAS 6338/18- installed (or the removed expansion valve is drilled for flushing and installed again ⇒ page 34).

Protected by copyright. Copying for private or commercial purposes, in part or in whole, is not permitted unless authorised by AUDI AG. AUDI AG does not guarantee or accept any liability with respect to the correctness of information in this document. Copyright by AUDI AG.

Note

- *In vehicles with two evaporators, refrigerant circuit is flushed in two work steps.*
- *Currently the front and rear expansion valves have the same connections (only the control characteristics are different)*

Downloaded from www.Manualslib.com manuals search engine

Drill an additional hole in the Adapters -VAS 6338/5- and -VAS 6338/11- .

– Drill a hole -A- (the dimensions in the illustration are given in mm).

Rework the Adapter -VAS 6338/3- .

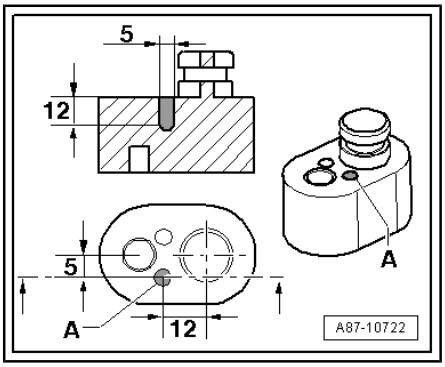

Protected by copyright. Copying for private or commercial purposes, in part or in whole, is not permitted unless authorised by AUDI AG. AUDI AG does not guarantee or accept any liability with respect to the correctness of information in this document. Copyright by AUDI AG.

Downloaded from www.Manualslib.com manuals search engine

– Sand off or file off the Adapter -VAS 6338/3- near -A- without bending the refrigerant pipe (dimensions are in mm).

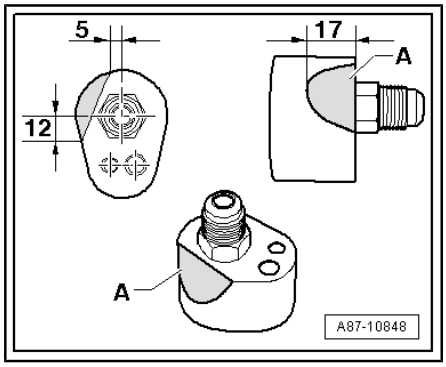

Protected by copyright. Copying for private or commercial purposes, in part or in whole, is not permitted unless authorised by AUDI AG. AUDI AG does not guarantee or accept any liability with respect to the correctness of information in this document. Copyright by AUDI AG.

Downloaded from www.Manualslib.com manuals search engine

Audi Q7

Vehicle	Required Adapters For The Connectors To A/C Compressor	Required Adapters For Connections To Fluid Reservoir / To Second Evaporator.	Other
Audi Q7 (4L_) from MY 06 ◆ Vehicles with one evaporator (2 zone A/C system)	– Compressor manufacturer Denso (block connections with radial sealing) ◆ Low pressure side Adapter -VAS 6338/12- ◆ High pressure side Adapter -VAS 6338/3-	– No adapter required, dryer is removed from fluid reservoir on condenser and the opening is sealed.	Expansion valve removed and Adapter -VAS 6338/17- or adapter -VAS 6338/33- installed (depending on the expansion valve version or a drilled expansion valve, for example, 7L0 820 712 A or 7H0 820 679 B or 7L0 820 679 C installed, refer to ⇒ page 34). Refer to Electronic Parts Catalog (ETKA).
◆ Additional on vehicles with 2 evaporators (4 zone A/C system)		To flush circuit with evaporator in front A/C unit ◆ Adapter -VAS 6338/5- for sealing the low-pressure side connection (to second evaporator) ◆ Adapter -VAS 6338/11- for sealing the high-pressure side connection (to second evaporator)	

Protected by copyright. Copying for private or commercial purposes, in part or in whole, is not permitted unless authorised by AUDI AG. AUDI AG does not guarantee or accept any liability with respect to the correctness of information in this document. Copyright by AUDI AG.

Downloaded from www.Manualslib.com manuals search engine

Vehicle	Required Adapters For The Connectors To A/C Compressor	Required Adapters For Connections To Fluid Reservoir / To Second Evaporator.	Other
		To flush the second evaporator and corresponding lines ♦ Adapter -VAS 6338/3- for connecting A/C Service Station to the low-pressure side connection (to second evaporator). ♦ Adapter -VAS 6338/4- for connecting A/C Service Station to the high-pressure side connection (to second evaporator).	Expansion valve on second evaporator removed and Adapter -VAS 6338/17- installed (or drilled expansion valve, e.g. 7L0 820 712 A installed, refer to ⇒ page 34). Refer to Electronic Parts Catalog (ETKA).

Note

In vehicles with two evaporators, refrigerant circuit is flushed in two work steps.

Audi R8

Vehicle	Required Adapters For The Connectors To A/C Compressor	Adapters Necessary For The Connections To The Accumulator	Other
Audi R8 (42_) from MY 08	– Compressor manufacturer Denso (block connections with radial sealing) ♦ Low pressure side Adapter -VAS 6338/12- ♦ High pressure side Adapter -VAS 6338/3-	Reservoir – Block connections with radial sealing at input and output ♦ Adapter -VAS 6338/8- (2x needed)	- Restrictor removed, connections reconnected

Protected by copyright. Copying for private or commercial purposes, in part or in whole, is not permitted unless authorised by AUDI AG. AUDI AG does not guarantee or accept any liability with respect to the correctness of information in this document. Copyright by AUDI AG.

Downloaded from www.Manualslib.com manuals search engine

Note

- *The A/C compressor can only be removed when the engine is removed on the Audi R8. The refrigerant lines must be removed in order to be able to flush the refrigerant circuit. Refer to ⇒ Heating, Ventilation and Air Conditioning; Rep. Gr. 87 ; Removal and Installation (vehicle-specific repair manual).*
- *Both installed condensers are flushed in opposite direction of the refrigerant flow direction.*

Protected by copyright. Copying for private or commercial purposes, in part or in whole, is not permitted unless authorised by AUDI AG. AUDI AG does not guarantee or accept any liability with respect to the correctness of information in this document. Copyright by AUDI AG.

2.1.3 Condenser

The condenser conducts heat from compressed refrigerant gas to the ambient air.

This condenses the refrigerant gas to fluid.

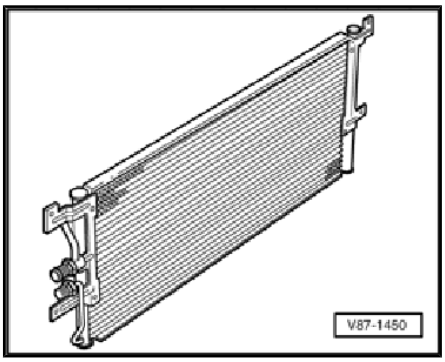

Note

Depending on the version of the refrigerant circuit, the fluid reservoir installed either on the condenser or inside the condenser (integrated). Refer to ⇒ Heating, Ventilation and Air Conditioning; Rep. Gr. 87 ; Removal and Installation (vehicle-specific repair manual) and Electronic Parts Catalog (ETKA).

2.1.4 Connections with Schrader Valve

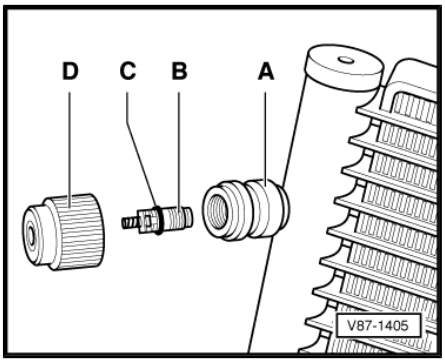

- -A- Service connection (soldered in)
- -B- Valve insert (Schrader valve or needle valve)
- -C- O-ring (belonging to the valve)
- -D- Cap with seal

Note

- *After connecting, install the hand wheel for the service coupling just far enough into the quick-release coupling adapter until the valve is securely opened inside the service connection (pay attention to the pressure gauge, do not put too much pressure on the valve).*
- *For removing and installing the valve set -B- when the refrigerant circuit is evacuated, for example, use an adapter from the Socket for A/C valves -T10364- .*
- *Tighten the valve insert -B- very carefully because the tightening specification is very small.*
- *There are different versions of these valves, which means there are different tightening specifications. Valve insert -B- with a VG5 (5.2 x 0.7 mm, tire valve) thread has a tightening specification of 0.4 Nm +- 0.1 Nm; a valve insert with a M6 x 0.75 mm thread has a tightening specification of 0.9 Nm +- 0.1 Nm and a valve insert with a M8 x 1.0 mm thread has a tightening specification of 2.0 Nm+- 0.2 Nm.*
- *There are different versions of these valves, valve inserts and their caps. Be sure to use the correct version. Refer to the Electronic Parts Catalog (ETKA).*

Downloaded from www.Manualslib.com manuals search engine

2.1.5 Connections with Primary Sealing Valve (Ball Valve)

WARNING

Before unscrewing connection, connect service station and extract refrigerant. Refrigerant circuit must be empty to avoid possible injury.

Connection With High-Pressure Valve

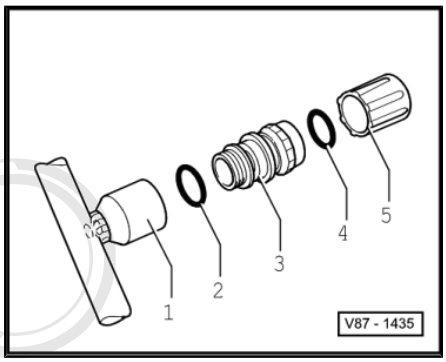

1 - Socket with internal thread (soldered in)

2 - O-ring (version and identification: black or colored. Refer to the Electronic Parts Catalog (ETKA).

3 - Valve with an external thread and groove for the O-ring (identification: ball valve).

4 - Cap seal

5 - Sealing cap

Note

- *After connecting, install the hand wheel for the service coupling just far enough into the quick-release coupling adapter until the valve is securely opened inside the service connection (pay attention to the pressure gauge, do not put too much pressure on the valve).*
- *For removing and installing the valve -B- when the refrigerant circuit is evacuated, for example, use an adapter from the Socket for A/C valves -T10364- .*
- *There are different versions of these valves (with internal or external threads). The tightening specifications will also differ. The valves -3- with an M12 x 1.5 mm external thread have a tightening specification of 9 Nm +- 1 Nm.*
- *There are different versions of these valves, valve inserts and their caps. Be sure to use the right versions. Refer to the Electronic Parts Catalog.*

Protected by copyright. Copying for private or commercial purposes, in part or in whole, is not permitted unless authorised by AUDI AG. AUDI AG does not guarantee or accept any liability with respect to the correctness of information in this document. Copyright by AUDI AG.

Downloaded from www.Manualslib.com manuals search engine

Connection With Low-Pressure Valve

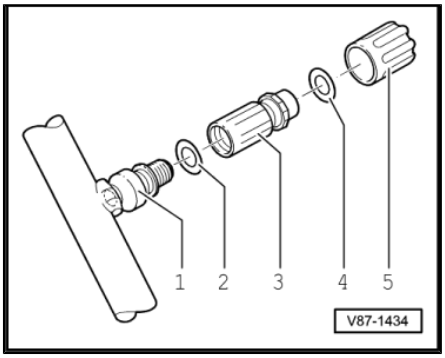

1 - Socket with an external thread and groove for the O-ring (soldered in).

2 - O-ring (version and identification: black or colored. Refer to the Electronic Parts Catalog.

3 - Valve with an internal thread

4 - Cap seal

5 - Sealing cap

Note

- *Install the hand wheel for the service coupling just far enough into the quick-release coupling adapter until the valve is securely opened inside the service connection (pay attention to the pressure gauge, do not put too much pressure on the valve).*
- *for removing and installing the valve -B- when the refrigerant circuit is evacuated, for example, use an adapter from the Socket for A/C valves -T10364- .*
- *There are different versions of these valves (with internal or external threads). The tightening specifications will also differ. The valves -3- with an M12 x 1.25 mm internal thread have a tightening specification of 9 Nm +- 1 Nm.*
- *There are different versions of these valves, valve inserts and their caps. Be sure to use the right versions. Refer to the Electronic Parts Catalog (ETKA).*

2.1.6 Evaporator

The fluid refrigerant evaporates in the evaporator pipe coils. The heat required for this is extracted from the air flowing on the evaporator ribbing. The air cools off. Refrigerant evaporates and is extracted with the absorbed heat by the A/C compressor.

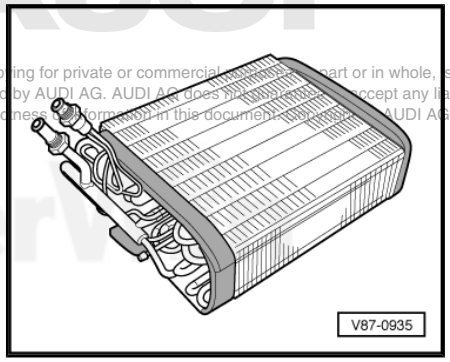

A defined amount of refrigerant is supplied to the evaporator by a restrictor or expansion valve. In systems with expansion valve, the throughput is regulated so that only gaseous refrigerant escapes the evaporator outlet.

Copyright. Copying for private or commercial purposes, in part or in whole, is not permitted unless authorised by AUDI AG. AUDI AG does not guarantee or accept any liability with respect to the correctness of information in this document copyright by AUDI AG.

Downloaded from www.Manualslib.com manuals search engine

2.1.7 Expansion Valve

The expansion valve atomizes the streaming refrigerant and controls the flow quantity so that the vapor is gaseous only at the evaporator outlet, depending on the heat transmission.

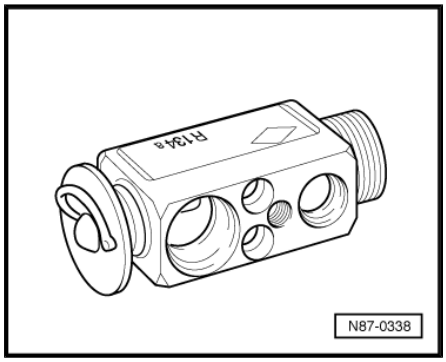

Note

- *Be sure to use the correct part number when replacing the expansion valve. Refer to Electronic Parts Catalog (ETKA).*
- *Different characteristic curves matched to the appropriate circuit. Refer to ⇒ Heating, Ventilation and Air Conditioning; Rep. Gr. 87 ; Description and Operation (vehicle-specific repair manual) and Electronic Parts Catalog (ETKA).*
- *Depending on the A/C compressor version, there may be a valve installed on the high pressure side of the A/C compressor, which prevents the liquid refrigerant from flowing back into the compressor once the A/C is turned off. If an A/C compressor with this valve is installed in a vehicle with a refrigerant circuit having an expansion valve, then it may take some time until the pressure in the high pressure side decreases (the expansion is cold and the pressure in the low pressure side quickly increases after it is turned off, the expansion valve closes and the refrigerant flows slowly into the low pressure side). If the A/C compressor is switched on, the pressure on the low pressure side goes down, the expansion valve open and the refrigerant can flow of the low pressure side.*

Protected by copyright. Copying for private or commercial purposes, in part or in whole, is not permitted unless authorised by AUDI AG. AUDI AG does not guarantee or accept any liability with respect to the correctness of information in this document. Copyright by AUDI AG.

Downloaded from www.Manualslib.com manuals search engine

2.1.8 Fluid Reservoir

The receiver collects the fluid drops and then directs them in an uninterrupted stream to the expansion valve. Moisture which has entered the refrigerant circuit during repairs will be collected by the desiccant bag in the receiver.

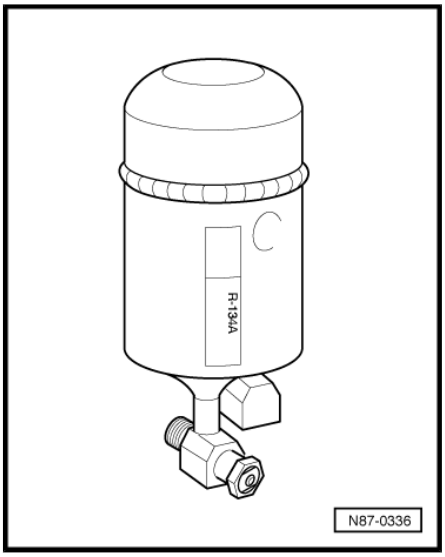

Note

- *Replace the reservoir if refrigerant circuit has been open for a long time (beyond the normal repair time) and moisture has penetrated inside, or if required due to a specific complaint* *⇒ "5 Removal and Installation", page 191* *.*
- *Only remove sealing plugs shortly before installation.*
- *A desiccant bag in an unsealed reservoir is saturated with moisture after a short period of time and unusable.*
- *When installing, note arrow for direction of flow if necessary.*
- *Depending on the version of the refrigerant circuit, the fluid reservoir installed either on the condenser or inside the condenser (integrated). Refer to ⇒ Heating, Ventilation and Air Conditioning; Rep. Gr. 87 ; Removal and Installation (vehicle-specific repair manual) and Electronic Parts Catalog (ETKA).*
- *The procedure is different for each complaint depending on the version of the fluid reservoir and the dryer cartridge. If the fluid reservoir, for example, is attached to the condenser, then it can be replaced complete with the drying cartridge. If the fluid reservoir, for example, is inside the condenser, then the dryer cartridge, and any possible additional filters, can be replaced separately, on most versions. If the fluid reservoir is inside the condenser and there is absolutely no way to replace the reservoir or the dry cartridge individually, then the entire condenser must be replaced. Refer to ⇒ Heating, Ventilation and Air Conditioning; Rep. Gr. 87 ; Removal and Installation (vehicle-specific repair manual) and Electronic Parts Catalog (ETKA).*
- *Depending on the construction of the refrigerant circuit, the receiver can also be secured onto the condenser. Refer to ⇒ Heating, Ventilation and Air Conditioning; Rep. Gr. 87 ; Removal and Installation (vehicle-specific repair manual) and Electronic Parts Catalog (ETKA).*

Protected by copyright. Copying for private or commercial purposes, in part or in whole, is not permitted unless authorised by AUDI AG. AUDI AG does not guarantee or accept any liability with respect to the correctness of information in this document. Copyright by AUDI AG.

Downloaded from www.Manualslib.com manuals search engine

2.1.9 Flushing Circuit Block Diagrams

Note

- *The arrows in the following illustrations show the direction of refrigerant flow during flushing (refrigerant flows in opposite direction of flow when A/C system is in operation while flushing, therefore the high pressure side of the A/C service system is connected to the low pressure connection of the refrigerant circuit to the A/C compressor).*
- *These block diagrams show a refrigerant circuit with restrictor and reservoir, refer to ⇒ page 63 and a refrigerant circuit with expansion valve, fluid reservoir and a second evaporator (optional equipment on certain vehicles), refer to ⇒ page 65 .*
- *Depending on the construction of the A/C service station, check-valves may be installed between the refrigerant circuit and the A/C service station (to guarantee correct direction of refrigerant flow during flushing).*

Refrigerant Circuit with Restrictor and Reservoir

Note

On vehicles with restrictor and reservoir, the restrictor and reservoir are removed, the lines disconnected for removing the restrictor are reconnected again. The connections to the reservoir removed are connected by means of two adapters and the Fill hose -VAS 6338/31- (from the Adapter case for VW/Audi passenger cars -VAS 6338/1-).

Protected by copyright. Copying for private or commercial purposes, in part or in whole, is not permitted unless authorised by AUDI AG. AUDI AG does not guarantee or accept any liability with respect to the correctness of information in this document. Copyright by AUDI AG.

Downloaded from www.Manualslib.com manuals search engine

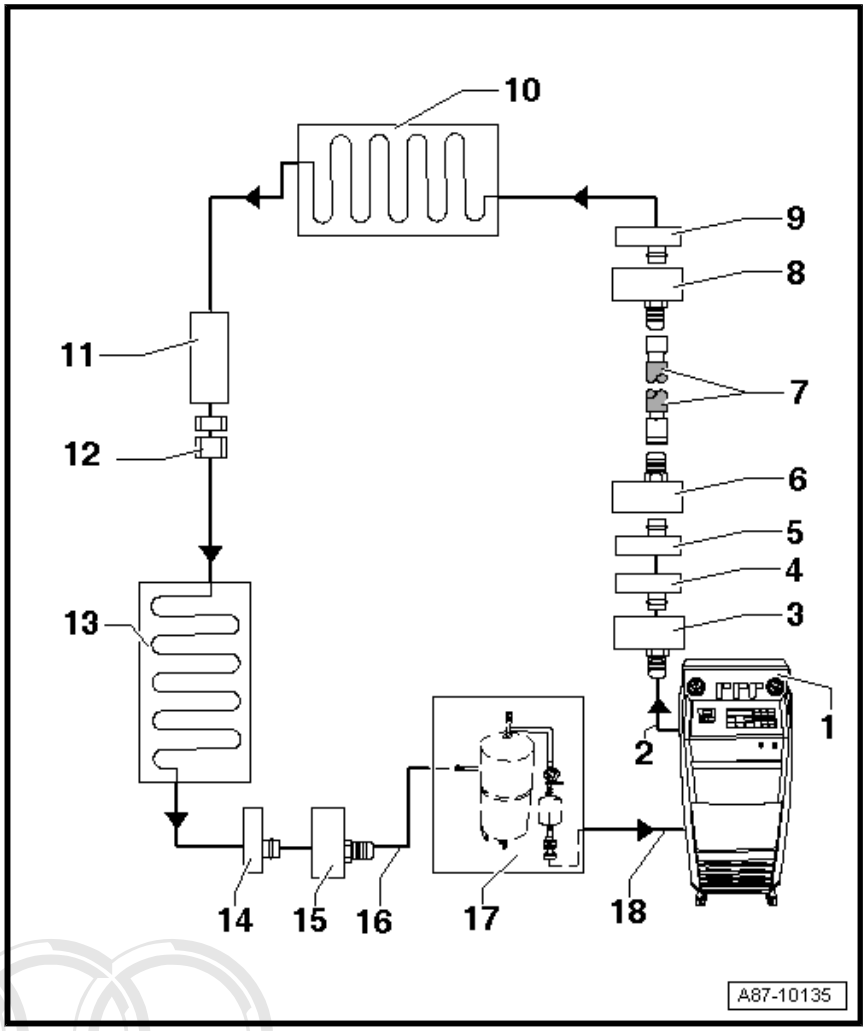

1 - A/C Service Station

- ❑ With electronics and a flushing program, e.g. A/C service station with flushing device .
- ❑ If an A/C service station without a flushing program is used, the procedure must be performed manually (evacuate, flush 3 times with at least 4 kg refrigerant each and extract refrigerant again, evacuate).

2 - Refrigerant Hose Of A/C Service Station

- ❑ From high pressure side of A/C service station (mostly colored red) to low pressure side connection of A/C compressor on refrigerant circuit (larger diameter).

3 - Adapter To Connection For Low Pressure Side On Refrigerant Circuit

- ❑ Different versions depending on vehicle. Refer to ⇒ “2.1.2 Adapter for Assembling Flushing Circuit“, page 42 .
- ❑ From VW/Audi passenger vehicle set adapter chest -VAS 6338/1- .

4 - Low Pressure Side Connection On Refrigerant Circuit

- ❑ Different versions depending on vehicle. Refer to ⇒ “2.1.2 Adapter for Assembling Flushing Circuit“, page 42 .
- ❑ On refrigerant line from A/C compressor to reservoir.

5 - Connection To Reservoir

- ❑ Different versions depending on vehicle. Refer to ⇒ “2.1.2 Adapter for Assembling Flushing Circuit“, page 42 .
- ❑ On refrigerant line from A/C compressor to reservoir.

6 - Adapter For Bridging The Removed Reservoir

Protected by copyright. Copying for private or commercial purposes, in part or in whole, is not permitted unless authorised by AUDI AG. AUDI AG does not guarantee or accept any liability with respect to the correctness of information in this document. Copyright by AUDI AG.

- ❑ Different versions depending on vehicle. Refer to ⇒ “2.1.2 Adapter for Assembling Flushing Circuit“, page 42 .
- ❑ From VW/Audi passenger vehicle set adapter chest -VAS 6338/1- .

7 - Refrigerant Charge Hose, refer to ⇒ “2.1.2 Adapter for Assembling Flushing Circuit“, page 42

- ❑ Charge hose -VAS 6338/31- (from VW/Audi passenger vehicle set adapter chest -VAS 6338/1-) for example.

8 - Adapter For Bridging The Removed Reservoir

- ❑ Different versions depending on vehicle. Refer to ⇒ “2.1.2 Adapter for Assembling Flushing Circuit“, page 42 .
- ❑ From VW/Audi passenger vehicle set adapter chest -VAS 6338/1- .

9 - Connection To Reservoir

- ❑ Different versions depending on vehicle. Refer to ⇒ “2.1.2 Adapter for Assembling Flushing Circuit“, page 42 .

Downloaded from www.Manualslib.com manuals search engine

10 - Evaporator

11 - Component Location Of Restrictor

- ❑ Restrictor is removed.
- ❑ Remove the restrictor. Refer to ⇒ Heating, Ventilation and Air Conditioning; Rep. Gr. 87 ; Removal and Installation (vehicle-specific repair manual).

12 - Bolts In Refrigerant Line

- ❑ Bolt together again after removing restrictor. Refer to ⇒ Heating, Ventilation and Air Conditioning; Rep. Gr. 87 ; Removal and Installation (vehicle-specific repair manual).

13 - Condenser

14 - High Pressure Side Connection On Refrigerant Circuit

- ❑ Different versions depending on vehicle. Refer to ⇒ “2.1.2 Adapter for Assembling Flushing Circuit“, page 42 .

15 - Adapter To Connection For High Pressure Side On Refrigerant Circuit

- ❑ Different versions depending on vehicle. Refer to ⇒ “2.1.2 Adapter for Assembling Flushing Circuit“, page 42 .
- ❑ From VW/Audi passenger vehicle set adapter chest -VAS 6338/1- .

16 - Charge Hose For Refrigerant Circuit Flushing Device

- ❑ From connection to the high pressure side of the A/C compressor on the refrigerant circuit (smaller diameter) to input of refrigerant circuit flushing device.

17 - Refrigerant Circuit Flushing Device

- ❑ There are different versions of the Refrigerant circuit flushing device . Refer to the Special Tools and Equipment Catalog.
- ❑ With filter, viewing glass, security valve, heater, refrigerant container, etc. (depending on version).
- ❑ Depending on the construction of the A/C service station and of refrigerant circuit flushing device, a check-valve may be installed at output of refrigerant circuit flushing device (to guarantee correct direction of refrigerant flow during flushing).

18 - Refrigerant Hose Of A/C Service Station

- ❑ From low pressure side of A/C service station (mostly colored blue) to output of refrigerant circuit flushing device.

Protected by copyright. Copying or distribution of this document is not permitted unless authorised by AUDI AG. AUDI AG does not guarantee or accept any liability with respect to the correctness of information in this document. Copyright by AUDI AG.

Refrigerant Circuit With Expansion Valve, Fluid Reservoir and Second Evaporator

Note

- ♦ *This block diagram shows a refrigerant circuit with expansion valve, fluid reservoir and second evaporator (optional equipment on certain vehicles).*
- ♦ *On vehicles with expansion valve and fluid reservoir, the expansion valve is removed and replaced by an adapter. Depending on the vehicle, the fluid reservoir must also be removed and line connections to fluid reservoir be connected to each other by two adapters and a charge hose.*
- ♦ *On a vehicle with only one evaporator, the components as of position 16 are not installed or are not required.*

Downloaded from www.Manualslib.com manuals search engine

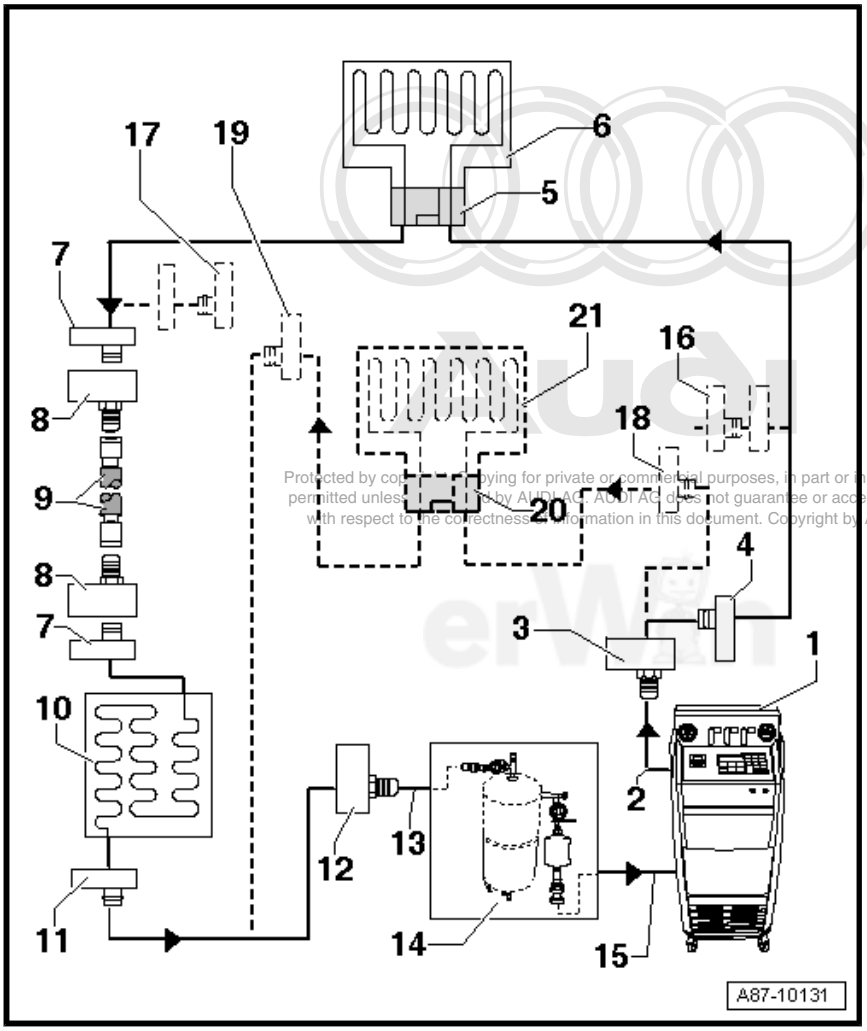

Protected by copyright. Copying for private or commercial purposes, in part or in whole, is not permitted unless authorised by AUDI AG. AUDI AG does not guarantee or accept any liability with respect to the correctness of information in this document. Copyright by AUDI AG.

1 - A/C Service Station

- With electronics and a flushing program, A/C service station with flushing device .
- If an A/C service station without a flushing program is used, the procedure must be performed manually (evacuate, flush 3 times with at least 4 kg refrigerant each and extract refrigerant again, evacuate).

2 - Refrigerant Hose Of A/C Service Station

- From high pressure side of A/C service station (mostly colored red) to low pressure side connection of A/C compressor on refrigerant circuit (larger diameter).

3 - Adapter To Connection For Low Pressure Side On Refrigerant Circuit

- Different versions depending on vehicle. Refer to ⇒ "2.1.2 Adapter for Assembling Flushing Circuit", page 42 .
- From VW/Audi passenger vehicle set adapter chest -VAS 6338/1- .

4 - Low Pressure Side Connection On Refrigerant Circuit

- Different versions depending on vehicle. Refer to ⇒ "2.1.2 Adapter for Assembling Flushing Circuit", page 42 .

5 - Adapter For The Removed Expansion Valve

- Different versions depending on vehicle. Refer to ⇒ "2.1.2 Adapter for Assembling Flushing Circuit", page 42 .
- From VW/Audi passenger vehicle set adapter chest -VAS 6338/1-

6 - Evaporator

7 - Connection To Fluid Reservoir

- Different versions depending on vehicle. Refer to ⇒ "2.1.2 Adapter for Assembling Flushing Circuit", page 42 .
- Neither installed on vehicles with dryer cartridge in fluid reservoir at condenser nor with fluid reservoir installed in condenser. Refer to⇒ Heating, Ventilation and Air Conditioning; Rep. Gr. 87 ; Removal and Installation (vehicle-specific repair manual).

8 - Adapter For Bridging The Removed Fluid Reservoir

- Not required for all vehicles.
- Different versions depending on vehicle. Refer to ⇒ "2.1.2 Adapter for Assembling Flushing Circuit", page 42 .
- From VW/Audi passenger vehicle set adapter chest -VAS 6338/1- .

9 - Refrigerant Charge Hose, refer to ⇒ "2.1.2 Adapter for Assembling Flushing Circuit", page 42

- Charge hose -VAS 6338/31- (from VW/Audi passenger vehicle set adapter chest -VAS 6338/1-) for example.

Downloaded from www.Manualslib.com manuals search engine

10 - Condenser

- If a fluid reservoir with dryer cartridge is installed at the condenser, the dryer cartridge must be removed (reseal fluid reservoir at or in condenser). Refer to ⇒ Heating, Ventilation and Air Conditioning; Rep. Gr. 87 ; Removal and Installation (vehicle-specific repair manual).
- If the fluid reservoir is directly installed at the condenser, the fluid reservoir must be removed and replaced only after flushing. Refer to ⇒ Heating, Ventilation and Air Conditioning; Rep. Gr. 87 ; Removal and Installation (vehicle-specific repair manual).

Note

11 - High Pressure Side Connection On Refrigerant Circuit

- Different versions depending on vehicle. Refer to
⇒ “2.1.2 Adapter for Assembling Flushing Circuit“, page 42 .

12 - Adapter To Connection For High Pressure Side On Refrigerant Circuit

- Different versions depending on vehicle. Refer to
⇒ “2.1.2 Adapter for Assembling Flushing Circuit“, page 42 .
- From VW/Audi passenger vehicle set adapter chest -VAS 6338/1- .

13 - Charge Hose For Refrigerant Circuit Flushing Device

- From connection to the high pressure side of the A/C compressor on the refrigerant circuit (smaller diameter) to input of refrigerant circuit flushing device.

14 - Refrigerant Circuit Flushing Device

- There are different versions of the Refrigerant circuit flushing device . Refer to the Special Tools and Equipment Catalog.
- With filter, viewing glass, security valve, heater, refrigerant container, etc. (depending on version).
- Depending on the construction of the A/C service station and of refrigerant circuit flushing device, a check-valve may be installed at output of refrigerant circuit flushing device (to guarantee correct direction of refrigerant flow during flushing).

15 - Refrigerant Hose Of A/C Service Station

- From low pressure side of A/C service station (mostly colored blue) to output of refrigerant circuit flushing device.

Protected by copyright. Copying for private or commercial purposes, in part or in whole, is not permitted unless authorised by AUDI AG. AUDI AG does not guarantee or accept any liability with respect to the correctness of information in this document. Copyright by AUDI AG.

16 - Adapter For Sealing Outlet To The Second Evaporator

- Only necessary on certain vehicles with optional equipment of second evaporator.
- From VW/Audi passenger vehicle set adapter chest -VAS 6338/1- .

17 - Adapter For Sealing Outlet To The Second Evaporator

- Only necessary on certain vehicles with optional equipment of second evaporator.
- From VW/Audi passenger vehicle set adapter chest -VAS 6338/1- .

18 - Low Pressure Side Connection On Refrigerant Circuit To Second Evaporator

- Different versions depending on vehicle. Refer to
⇒ “2.1.2 Adapter for Assembling Flushing Circuit“, page 42 .
- Only present on certain vehicles with optional equipment of second evaporator.

19 - High Pressure Side Connection On Refrigerant Circuit To Second Evaporator

- Different versions depending on vehicle. Refer to
⇒ “2.1.2 Adapter for Assembling Flushing Circuit“, page 42 .
- Only present on certain vehicles with optional equipment of second evaporator.

20 - Adapter For The Removed Expansion Valve On Second Evaporator

- Different versions depending on vehicle. Refer to
⇒ “2.1.2 Adapter for Assembling Flushing Circuit“, page 42 .
- Only necessary on certain vehicles with optional equipment of second evaporator.
- From VW/Audi passenger vehicle set adapter chest -VAS 6338/1- .

21 - Second Evaporator

- Only present on certain vehicles with optional equipment of second evaporator.

Downloaded from www.Manualslib.com manuals search engine

2.1.10 O-Ring Seals

These rings seal off the connection points between individual components of the refrigerant circuit.

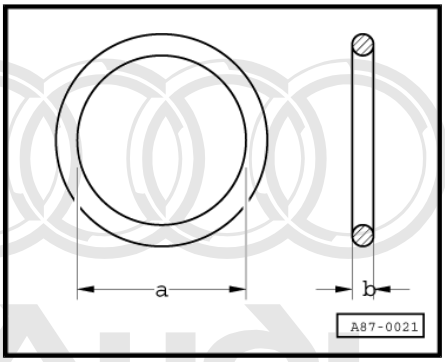

Only O-rings that are resistant to refrigerant R134a and refrigerant oil must be installed. Make sure they are original replacement parts.

O-ring seals:

- Always use only once.
- Make sure diameters -a- and -b- are correct.
- Coat with refrigerant oil before installing. Refer to ⇒ Heating, Ventilation and Air Conditioning; Rep. Gr. 87 ; Removal and Installation (vehicle-specific repair manual).

Note

The color coding of refrigerant circuit O-rings with R134a has been discontinued. Black and colored O-rings are being used. Refer to Electronic Parts Catalog (ETKA) and ⇒ Heating, Ventilation and Air Conditioning; Rep. Gr. 87 ; General Information (vehicle-specific repair manual).

Protected by copyright. Copying for private or commercial purposes, in part or in whole, is not permitted unless authorised by AUDI AG. AUDI AG does not guarantee or accept any liability with respect to the correctness of information in this document. Copyright by AUDI AG.

2.1.11 Pressure Relief Valve

The pressure relief valve is installed on the A/C compressor or reservoir.

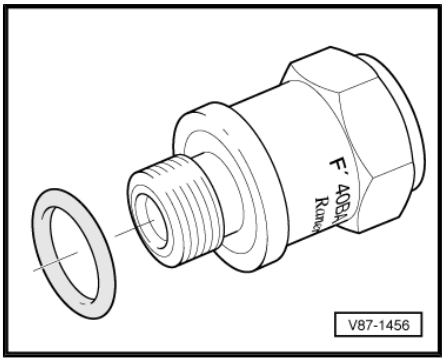

At a pressure of approximately 38 bar positive pressure, valve opens and closes again once pressure has dissipated (approximately 30 bar).

Refrigerant does not escape completely.

Depending on the version, a transparent plastic disc may be installed which breaks off as soon as the valve is activated.

2.1.12 Refrigerant Circuit Components, High and Low Pressure Sides

High pressure side are the condenser, receiver and restrictor or expansion valve to separate the high and low pressure liquid ends.

High pressure results from the restrictor or expansion valve forming a constriction and causing the refrigerant to accumulate, thus leading to an increase in pressure and temperature.

Excess pressure occurs if too much refrigerant or refrigerant oil is used, the condenser is contaminated, the radiator fan is malfunctioning, the system is blocked or in the event of moisture in the refrigerant circuit (icing-up of restrictor or expansion valve).

Low pressure side are the evaporator, reservoir, evaporator temperature sensor and A/C compressor to separate high and low pressure gas ends.

A drop in system pressure can be caused by loss of refrigerant, the restrictor or expansion valve (no constriction), a malfunctioning A/C compressor or an iced-up evaporator.

Downloaded from www.Manualslib.com manuals search engine

- A/C compressor, refer to ⇒ “2.1.1 A/C Compressor“, page 41 .
- Condenser, refer to ⇒ “2.1.3 Condenser“, page 58 .
- Evaporator, refer to ⇒ “2.1.6 Evaporator“, page 60 .
- Reservoir, refer to ⇒ “2.1.16 Reservoir“, page 73 .
- Restrictor, refer to ⇒ “2.1.17 Restrictor“, page 74 .
- Fluid Reservoir, refer to ⇒ “2.1.8 Fluid Reservoir“, page 62 .
- Expansion valve, refer to ⇒ “2.1.7 Expansion Valve“, page 61 .
- Refrigerant pipe with inner heat exchanger, refer to ⇒ “2.1.15 Refrigerant Pipe With Inner Heat Exchanger“, page 73 .
- Quick-release connections on the refrigerant lines, refer to ⇒ “1.4.5 Quick-Release Connections on Refrigerant Lines“, page 25 .
- O-rings, refer to ⇒ “2.1.10 O-Ring Seals“, page 68 .
- Refrigerant Circuit Pipes and Hoses, refer to ⇒ “1.4.7 Refrigerant Circuit Pipes and Hoses“, page 26 .
- Pressure Relief Valve, refer to ⇒ “2.1.11 Pressure Relief Valve“, page 68 .

Protected by copyright. Copying for private or commercial purposes, in part or in whole, is not permitted unless authorised by AUDI AG. AUDI AG does not guarantee or accept any liability with respect to the correctness of information in this document. Copyright by AUDI AG.

2.1.13 Refrigerant Circuit with Expansion Valve, Pressures and Temperatures

HP- High pressure side of refrigerant circuit.

LP- Low pressure side of refrigerant circuit.

Component	Aggregate State Of Refrigerant	Pressure (Bar Positive Pressure)	Temperature in Degrees Celsius
-1- Evaporator, from input to output	Vapor	approximately 1.2 bar[1)]1	approximately -7 °C[2)]2
-2- Expansion valve	Fluid, released as vapor	approximately 14 bar	approximately + 55 °C (HP- side), reduces to -7 °C (LP-side)
-3-High pressure switch / high pressure sensor	Fluid	approximately 14 bar	approximately +55 °C
-4- HP-side service connection and -5- Fluid reservoir	Fluid	approximately 14 bar	approximately +55 °C
-6- Condenser	From gas (at input) via vapor to fluid (at outlet)	approximately 14 bar	From approximately + 65 °C (at input) to approximately + 55 °C (at outlet)
-7- Pressure relief valve and -8- A/C compressor, HP-side	Gas	approximately 14 bar	approximately +65 °C
-9- A/C compressor low pressure side	Gas	approximately 1.2 bar[1)]1	approximately -1 °C[2)]2
-10- Pre-volume (not present in all vehicles) and -11- LP-side service connection	Gas	approximately 1.2 bar[1)]1	approximately -1 °C[2)]2

1) 1- Pressure in refrigerant circuits is maintained at approximately 2 bar absolute pressure (corresponds to approximately 1 bar positive pressure), regulated by A/C compressor, even though heat transfer changes and engine speeds vary. However, this applies only within

Downloaded from www.Manualslib.com manuals search engine

the performance range of the A/C compressor; if the performance limits of the A/C compressor are exceeded, the pressure increases, refer to ⇒ “4.4 Pressures, Checking“, page 153 .

2) 2 - Within the control range of the A/C compressor, temperature in the refrigerant circuits is maintained, regulated by A/C compressor, even though heat transfer changes and engine speeds vary. However, this applies only within the performance range of the A/C compressor; if the performance limits of the A/C compressor are exceeded, the temperature increases, refer to
⇒ “4.4 Pressures, Checking“, page 153 .

Protected by copyright. Copying for private or commercial purposes, in part or in whole, is not permitted unless authorised by AUDI AG. AUDI AG does not guarantee or accept any liability with respect to the correctness of information in this document. Copyright by AUDI AG.

Note

- *A/C compressors which do not regulate their performance are switched off by the respective control module via the A/C compressor regulator valve -N280- at an evaporator temperature below 0° C.*
- *In vehicles with A/C compressor regulator valve -N280- , the pressure is modified on the low pressure side by the valve.*
- *Temperature and pressure in the refrigerant circuit in vehicles with two evaporators and two expansion valves correspond to those in vehicles with only one evaporator and one expansion valve (parallel switching).*
- *Depending on the version of the refrigerant circuit, a component with an inner heat exchanger may be installed (for example, on the Audi A4 from MY 2008 and on the Audi A5 Coupe from MY 2008, a refrigerant line with an inner heat exchanger). Inside the inner heat exchanger, the flowing fluid warm refrigerant on the high pressure side is delivered into the low pressure side as flowing, vapor, cold refrigerant to increase the efficiency of the A/C system. Refer to* *⇒ “2.1.15 Refrigerant Pipe With Inner Heat Exchanger“, page 73* *.*

Arrows point in direction of refrigerant flow.

HP- High pressure side of refrigerant circuit.

LP- Low pressure side of refrigerant circuit.

Downloaded from www.Manualslib.com manuals search engine

1 - Evaporator

2 - Expansion Valve

3 - High Pressure Switch / High Pressure Sensor

- ❑ Different versions depending on vehicle

4 - Service Connection, HP Side

5 - Fluid Reservoir

- ❑ Different versions depending on vehicle

6 - Condenser

7 - Pressure Relief Valve

8 - A/C Compressor, HP side

9 - A/C Compressor, LP side

10 - Pre-volume

- ❑ Not present on all vehicles

11 - Service Connection, LP Side

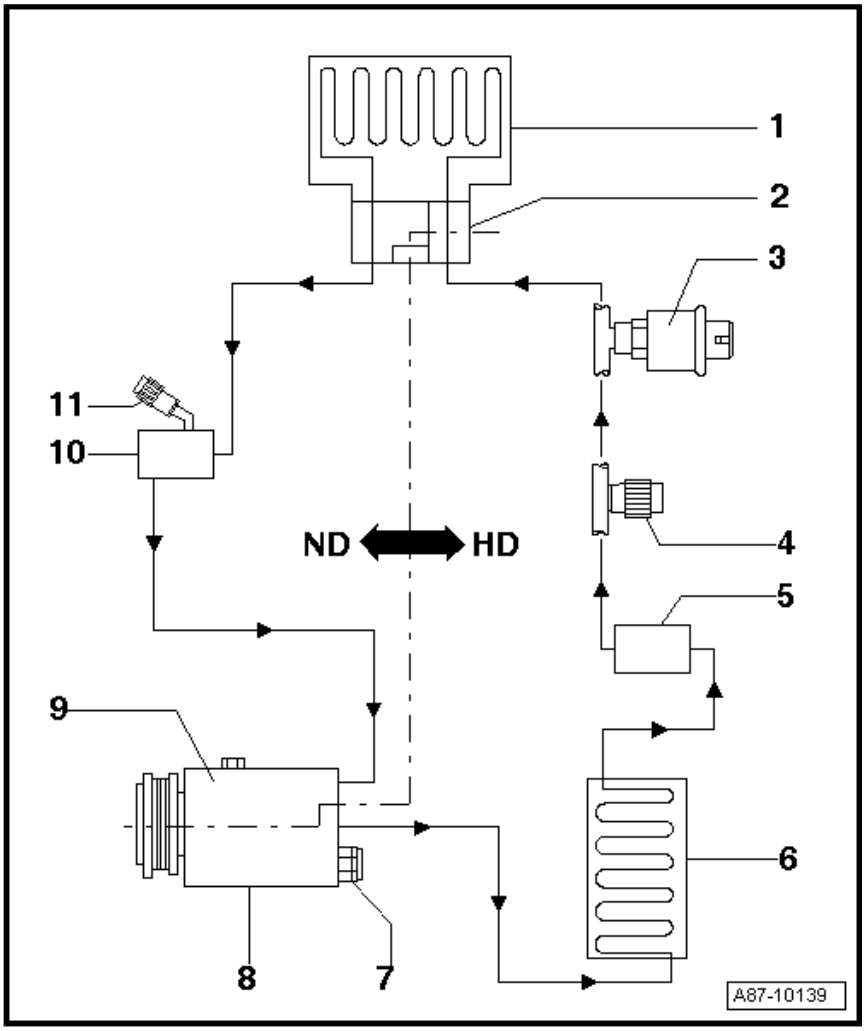

2.1.14 Refrigerant Circuit with Restrictor and Reservoir, Pressures and Temperatures

HP- High pressure side of refrigerant circuit.

LP- Low pressure side of refrigerant circuit.

Component	Aggregate State Of Refrigerant	Pressure (Bar Positive Pressure)	Temperature in Degrees Celsius
-1- A/C compressor, HP side	Gas	up to 20 bar	up to + 70 °C
-2- Condenser	From gas to vapor to fluid	up to 20 bar	up to + 70 °C
-3- Restrictor	From fluid to vapor	HP side up to 20 bar LP side greater than 1,0 bar	HP side up to + 60 °C LP side warmer than -4 °C
-4- Evaporator	From vapor to gas	Greater than 1,0 bar	Warmer than - 4 °C
-5- Reservoir	Gas		
-6- A/C compressor low pressure side	Gas		

Protected by copyright. Copying for private or commercial purposes, in part or in whole, is not permitted unless authorised by AUDI AG. AUDI AG does not guarantee or accept any liability with respect to the correctness of information in this document. Copyright by AUDI AG.

Pressures on A-side are maintained at approximately 2 bar absolute pressure (corresponds to approximately 1 bar positive pressure) by regulating A/C compressor also at various engine speeds. However, this applies only within the performance range

Downloaded from www.Manualslib.com manuals search engine

of the A/C compressor; if the performance limits of the A/C compressor are exceeded. Refer to
⇒ “4.4 Pressures, Checking“, page 153 .

Note

In vehicles with A/C compressor regulator valve -N280- , the pressure is modified on the low pressure side by the valve.

Arrows point in direction of refrigerant flow.

HP- High pressure side of refrigerant circuit.

LP- Low pressure side of refrigerant circuit.

1 - A/C Compressor, HP Side
2 - Condenser
3 - Restrictor
4 - Evaporator
5 - Reservoir
6 - A/C Compressor, LP Side

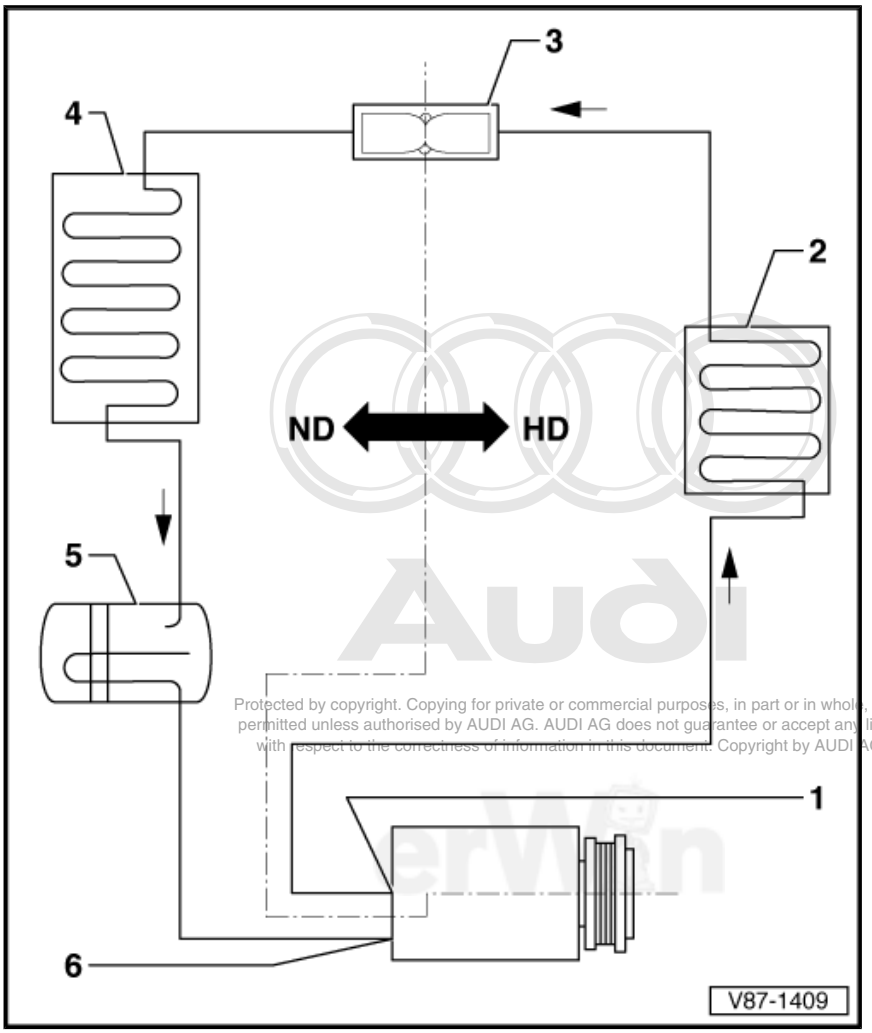

Protected by copyright. Copying for private or commercial purposes, in part or in whole, is not permitted unless authorised by AUDI AG. AUDI AG does not guarantee or accept any liability with respect to the correctness of information in this document. Copyright by AUDI AG.

Downloaded from www.Manualslib.com manuals search engine

2.1.15 Refrigerant Pipe With Inner Heat Exchanger

In this refrigerant pipe, the flowing fluid warm refrigerant on the high pressure side is delivered into the low pressure side as flowing, vapor, cold refrigerant to increase the efficiency of the A/C system.

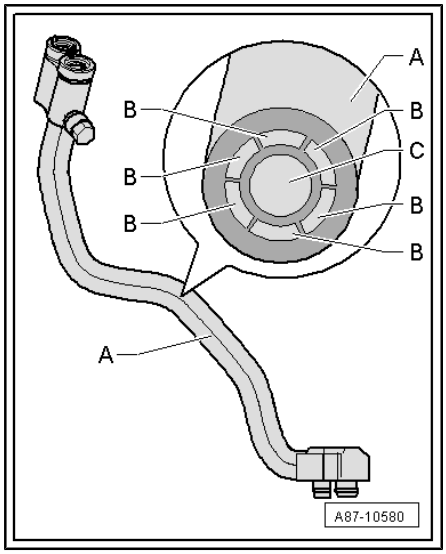

Note

This illustration shows a refrigerant pipe with an inner heat exchanger that is installed in the Audi A4 from MY 2008 and on the Audi A5 Coupe from MY 2008. Refer to ⇒ Heating, Ventilation and Air Conditioning; Rep. Gr. 87 ; Description and Operation (vehicle-specific repair manual).

A - Refrigerant pipe with inner heat exchanger

Protected by copyright. Copying for private or commercial purposes, in part or in whole, is not permitted unless authorised by AUDI AG. AUDI AG does not guarantee or accept any liability with respect to the correctness of information in this document. Copyright by AUDI AG.

B - Channel inside the refrigerant pipe through with the warm fluid refrigerant flows to the evaporator (refrigerant circuit high pressure side)

C - Channel inside the refrigerant pipe in which the vapor of cold refrigerant flow to the A/C compressor (refrigerant circuit low pressure side)

2.1.16 Reservoir

The reservoir collects the vaporized and gaseous mixture coming from the evaporator to ensure the compressor only receives gaseous refrigerant. Gaseous refrigerant is formed from the vapor.

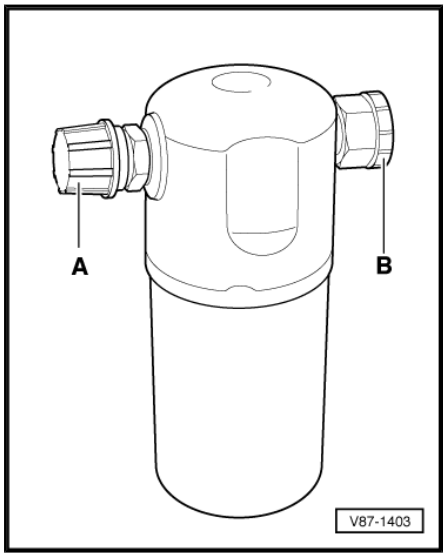

The refrigerant oil flowing in the circuit is not retained in the reservoir as it has an oil drilling.

Moisture which has entered the refrigerant circuit during repairs will be collected by a filter (desiccant bag) in the reservoir.

Gaseous refrigerant is extracted with oil by the A/C compressor.

Note

- *Replace the reservoir if refrigerant circuit has been open for a long time (beyond the normal repair time) and moisture has penetrated inside, or if required due to a specific complaint. Refer to ⇒ "5 Removal and Installation", page 191 .*
- *Remove sealing plugs -A- and -B- only immediately prior to installing.*
- *A desiccant bag in an unsealed reservoir is saturated with moisture after a short period of time and unusable.*
- *When installing, note arrow for direction of flow if necessary.*

Downloaded from www.Manualslib.com manuals search engine

2.1.17 Restrictor

The restrictor creates a constriction. This restriction reduces the flow and creates high and low pressure sides in the refrigerant circuit. Before the restrictor the refrigerant which is under a higher pressure is warm. After the restrictor the refrigerant which is under a low pressure is cold. Before the restriction there is a strainer for contaminants and after the restriction there is a strainer, to atomize the refrigerant before it reaches the evaporator.

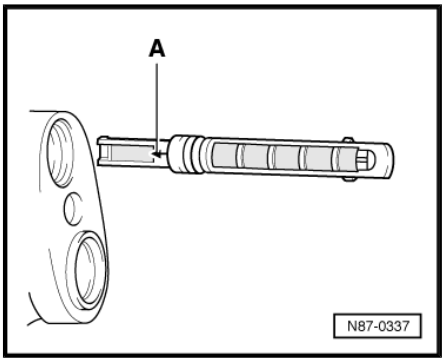

Note

- *Arrow -A- on restrictor points to evaporator.*
- *Replace after each opening of the circuit.*
- *There are different versions, therefore pay attention to the different customer service information sources. Refer to ⇒ Heating, Ventilation and Air Conditioning; Rep. Gr. 87 ; Description and Operation (vehicle-specific repair manual) and to the Electronic Parts Catalog (ETKA).*

2.2 Switches and Sensors on Refrigerant Circuit and Connections

⇒ “2.2.1 A/C Compressor Regulator Valve N280 “, page 74
⇒ “2.2.2 A/C Compressor Speed Sensor G111 “, page 75
⇒ “2.2.3 A/C Pressure Switch F129 “, page 75
⇒ “2.2.4 A/C Pressure/Temperature Sensor G395 “, page 76
⇒ “2.2.5 A/C Refrigerant High Pressure Switch F23 “, page 76
⇒ “2.2.6 A/C Refrigerant High Pressure Switch F118 “, page 76
⇒ “2.2.7 A/C Refrigerant Low Pressure Switch F73 “, page 77
⇒ “2.2.8 High Pressure Sensor G65 “, page 77
⇒ “2.2.9 Refrigerant Temperature Sensor G454 “, page 78

Protected by copyright. Copying for private or commercial purposes, in part or in whole, is not permitted unless authorised by AUDI AG. AUDI AG does not guarantee or accept any liability with respect to the correctness of information in this document. Copyright by AUDI AG.

2.2.1 A/C Compressor Regulator Valve - N280-

The regulator valve is implemented into the compressor. It is controlled by the Front A/C display control head -E87- or the Climatronic control module -J255- (depending on the vehicle, possibly via the databus of the an additional control module). Refer to ⇒ Heating and Air Conditioning; Rep. Gr. 87 ; Description and Operation (vehicle-specific repair manual). Pressure on the low pressure side is influenced via the regulator valve and thus regulates the temperature in the evaporator.

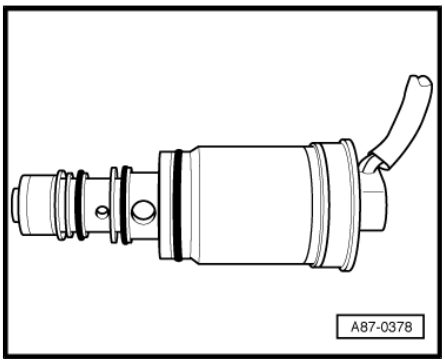

Note

The A/C compressor regulator valve is a component of the A/C compressor and cannot be replaced separately.

Downloaded from www.Manualslib.com manuals search engine

2.2.2 A/C Compressor Speed Sensor -G111-

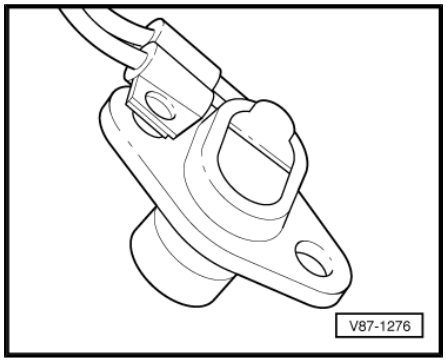

Inductive sensor

The sensor pulses (4 per compressor revolution) and the engine speed enable the Front A/C display control head -E87- or the Climatronic Control Module -J255- to calculate belt slip.

If the belt slip exceeds a specified value, the compressor is switched off by the control module via the A/C clutch.

Note

- *Installing in Audi vehicles with an A/C compressor driven by a ribbed belt and with Zexel compressor. Refer to ⇒ Heating and Air Conditioning; Rep. Gr. 87 ; Description and Operation (vehicle-specific repair manual).*
- *Beginning the production year 2006, the name of the Zexel A/C compressor was changed from Zexel to Valeo.*

2.2.3 A/C Pressure Switch -F129-

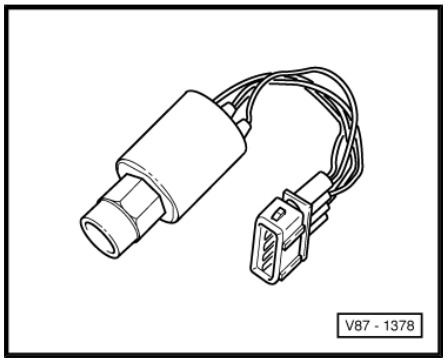

This pressure switch has 3 functions

1. Switches the coolant fan to the next higher level when the pressure in the refrigerant circuit increases (approximately 16 bar).

2. Switches off A/C system if pressure is excessive (approximately 32 bar), for example, because of insufficient engine cooling.

3. Switches off A/C system if pressure is insufficient (approximately 2 bar), for example, loss of refrigerant.

Note

A/C Pressure Switch -F129- replaces the A/C Refrigerant High Pressure Switch -F23- , A/C Refrigerant Low Pressure Switch -F73- and the A/C Refrigerant High Pressure Switch -F118- .

Protected by copyright. Copying for private or commercial purposes, in part or in whole, is not permitted unless authorised by AUDI AG. AUDI AG does not guarantee or accept any liability with respect to the correctness of information in this document. Copyright by AUDI AG.

Downloaded from www.Manualslib.com manuals search engine

2.2.4 A/C Pressure/Temperature Sensor - G395-

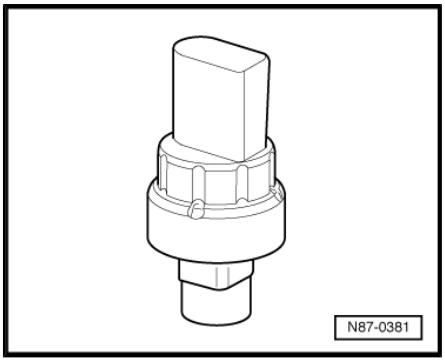

The A/C pressure/temperature sensor is installed instead of the High pressure sensor -G65- .

The A/C Pressure/Temperature Sensor -G395- (housing color gray at this time) and the High Pressure Sensor -G65- (housing color black at this time) differ only in color at this time, correct allocation must therefore be observed when replacing (part number. Refer to Electronic Parts Catalog (ETKA). As these two sensors emit different signals, the relevant control module can only evaluate the signal to which it has been matched. Refer to ⇒ Heating and Air Conditioning; Rep. Gr. 87 ; Description and Operation (vehicle-specific repair manual).

When voltage is applied, the A/C pressure/temperature sensor -G395- exchanges information with the control module via the air conditioner databus system (“LIN-Bus“). The relevant control module uses this information to calculate the pressure and temperature in the refrigerant circuit and any faults detected are signaled to the control module.

The temperature measured by the A/C pressure/temperature sensor differs from the actual refrigerant temperature in the refrigerant circuit because of the A/C pressure/temperature sensor design and its component location. Because of this, it is not currently evaluated and is not used to regulate the A/C system. Refer to ⇒ Heating and Air Conditioning; Rep. Gr. 87 ; Description and Operation (vehicle-specific repair manual).

Protected by copyright. Copying for private or commercial purposes, in part or in whole, is not permitted unless authorized by AUDI AG. AUDI AG does not guarantee or accept any liability with respect to the correctness of information in this document. Copyright by AUDI AG.

This information is used for example by the Climatronic Control Module -J255- to calculate the pressure in the refrigerant circuit and to actuate the downstream control modules (coolant fan control module, Engine Control Module etc.) via the data bus system. These control modules control the radiator fan the motor. Refer to ⇒ Heating and Air Conditioning; Rep. Gr. 87 ; Description and Operation (vehicle-specific repair manual).

2.2.5 A/C Refrigerant High Pressure Switch - F23-

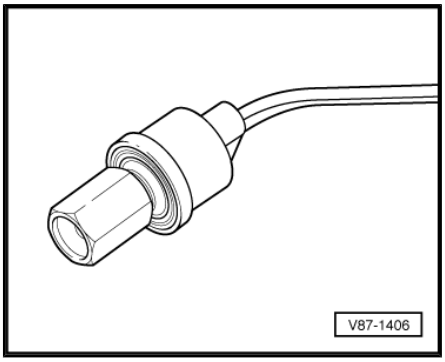

Function

Switches the coolant fan to the next higher level when the pressure in the refrigerant circuit increases (approximately 16 bar).

2.2.6 A/C Refrigerant High Pressure Switch - F118-

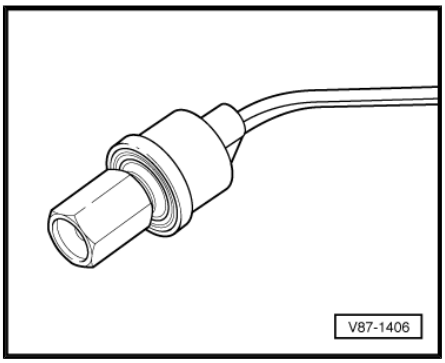

Function

Switches off A/C compressor when there is excessive pressure in the refrigerant circuit (approximately 32 bar).

Downloaded from www.Manualslib.com manuals search engine

2.2.7 A/C Refrigerant Low Pressure Switch - F73-

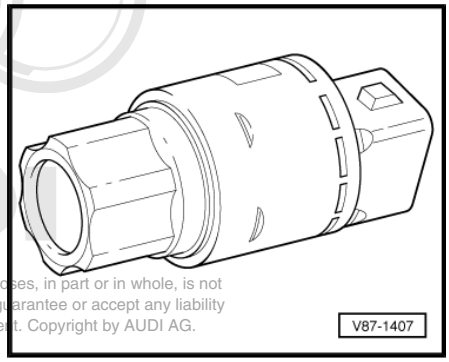

Function

Switches off A/C compressor when there is excessive pressure in the refrigerant circuit (approximately 2 bar).

Protected by copyright. Copying for private or commercial purposes, in part or in whole, is not permitted unless authorised by AUDI AG. AUDI AG does not guarantee or accept any liability with respect to the correctness of information in this document. Copyright by AUDI AG.

2.2.8 High Pressure Sensor -G65-

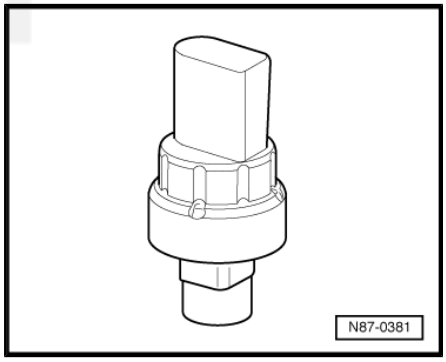

This high pressure sensor is installed instead of A/C pressure switch -F129- or A/C pressure/temperature sensor -G395- .

The A/C Pressure/Temperature Sensor -G395- (housing color gray at this time) and the High Pressure Sensor -G65- (housing color “black“ at this time) differ only in color at this time, correct allocation must therefore be observed when replacing (part number. Refer to Electronic Parts Catalog (ETKA). As these two sensors emit different signals, the relevant control module can only evaluate the signal to which it has been matched. Refer to ⇒ Heating and Air Conditioning; Rep. Gr. 87 ; Description and Operation (vehicle-specific repair manual).

When a voltage is applied, the High pressure sensor -G65- generates a square wave signal or a data telegram. This signal changes along with pressure in the system.

The control modules (radiator fan control module, engine control Front A/C display control head -E87- or Climatronic control module -J255- etc.) calculate the refrigerant circuit pressure and then control the radiator fan and motor, the A/C clutch -N25- and will change the control on the A/C compressor regulator valve -N280- . Refer to ⇒ Heating and Air Conditioning; Rep. Gr. 87 ; Description and Operation (vehicle-specific repair manual).

Downloaded from www.Manualslib.com manuals search engine

2.2.9 Refrigerant Temperature Sensor - G454-

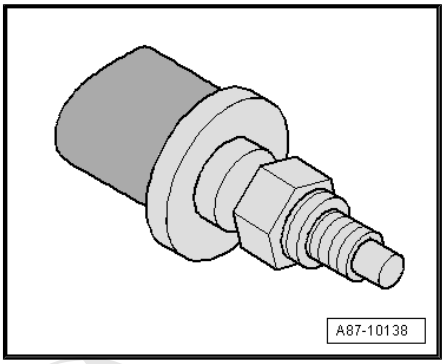

The Refrigerant Temperature Sensor (with temperature-dependent resistance) is installed, for example, in high pressure line in vicinity of the compressor.

In the refrigerant circuit, there is a direct relationship between temperature and pressure, if there should be too little refrigerant in the refrigerant circuit, the temperature in the refrigerant circuit rises more strongly than intended for this pressure when A/C system is operating.

Note

- *Installed, for example, on the Audi Q7 with certain engines. Refer to ⇒ Heating, Ventilation and Air Conditioning; Rep. Gr. 87 ; Removal and Installation (vehicle-specific repair manual) and ⇒ Wiring diagrams, Troubleshooting & Component locations.*
- *The Climatronic control module -J255- evaluates pressure and temperature in the refrigerant circuit and switches off the compressor in the event the temperature increases above the value stored for this pressure. Refer to ⇒ Heating, Ventilation and Air Conditioning; Rep. Gr. 87 ; Description and Operation (vehicle-specific repair manual) and Vehicle Diagnosis, Testing & Information System -VAS5051B- .*

Protected by copyright. Copying for private or commercial purposes, in part or in whole, is not permitted unless authorised by AUDI AG. AUDI AG does not guarantee or accept any liability with respect to the correctness of information in this document. Copyright by AUDI AG.

2.3 Electrical Components Not on Refrigerant Circuit

⇒ "2.3.1 Radiator Fan Control Module J293 ", page 78

2.3.1 Radiator Fan Control Module -J293-

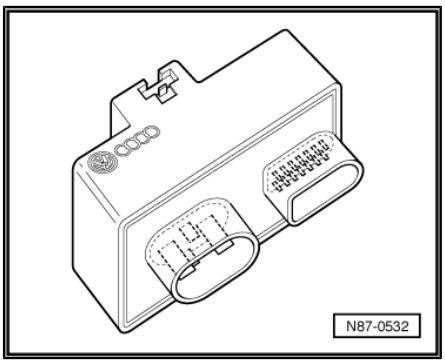

This control module switches on and off the A/C clutch and therefore the A/C compressor. It turns on the radiator fan and calculates the refrigerant circuit pressure in vehicles with a High pressure sensor -G65- . Refer to ⇒ Wiring diagrams, Troubleshooting & Component locations, ⇒ Heating, Ventilation and Air Conditioning; Rep. Gr. 87 ; Description and Operation (vehicle-specific repair manual).

Downloaded from www.Manualslib.com manuals search engine

2.4 A/C Service Station

⇒ "2.4.1 A/C System, Operating after Charging", page 79

⇒ "2.4.2 Using Service Station", page 80

⇒ "2.4.3 Charging Refrigerant Circuit", page 83

⇒ "2.4.4 Connecting for Measuring and Testing, Two Service Connections", page 83

⇒ "2.4.5 Connecting for Measuring and Testing, One Service Connection", page 84

⇒ "2.4.6 Connecting for Measuring and Testing, No Service Connection", page 85

⇒ "2.4.7 Connecting With Air Conditioning Adapter Set V.A.G 1786 ", page 86

⇒ "2.4.8 Connecting With Adapter Set VAG1785/10 ", page 87

⇒ "2.4.9 Draining Refrigerant Circuit", page 87

⇒ "2.4.10 Draining Service Station", page 88

⇒ "2.4.11 Evacuating Refrigerant Circuit", page 89

⇒ "2.4.12 Transferring Refrigerant To Reservoir (Charging Cylinder Or Reservoir Bottle) Of Service Station", page 93

2.4.1 A/C System, Operating after Charging

Note

If the compressor has been removed, rotate it about 10 times by hand prior to initial start-up (when or after installing, for example prior to installing the ribbed belt) to prevent damage caused by liquid impact when first switched on (any oil in compressor cylinder is forced out on rotation).

Protected by copyright. Copying for private or commercial purposes, in part or in whole, is not permitted unless authorised by AUDI AG. AUDI AG does not guarantee or accept any liability with respect to the correctness of information in this document. Copyright by AUDI AG.

Downloaded from www.Manualslib.com manuals search engine

Operating an A/C system with an A/C compressor mechanically driven

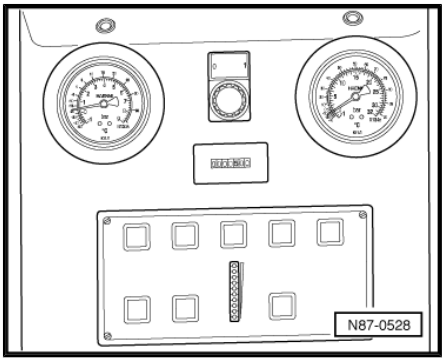

- Start engine with compressor switched off (version with A/C clutch).
- Set compressor to minimum output, for example, "Econ" or A/C off mode (version with no A/C clutch with regulating valve).
- Wait until idle speed has stabilized.
- Switch on compressor and operate system for at least 2 minutes at idling speed.
- If necessary, check pressures in refrigerant circuit using A/C service station.
- Turn engine off.
- Screw out handwheel on quick-release coupling adapter.
- Disconnect charging hoses from refrigerant circuit.
- Install the caps.

Operating an A/C system with an A/C compressor with an electrical drive

- Operate the A/C using “basic setting, compressor cut-in“ in Guide Fault Finding using Vehicle Diagnosis, Testing & Information System -VAS5051B- A/C System and Battery Regulation.
- After the basic setting and If necessary, check pressures in refrigerant circuit using A/C service station.
- Screw out handwheel on quick-release coupling adapter.
- Disconnect charging hoses from refrigerant circuit.
- Install the caps.

2.4.2 Using Service Station

Caution

- ***If it is suspected that chemicals were added to the refrigerant circuit to seal leaks, chemical substances to seal leaks in the refrigerant circuit (leak stop additive), do not connect the A/C service station and do not extract the refrigerant.***
- ***Chemicals that seal leaks in the coolant circuit form deposits that affect the function of the A/C system and lead to failure of the A/C system and the A/C service station.***
- ***Inform that customer that there are substances in the A/C system that are no approved by Audi.***

Reproduction of this document or any part of its contents in any form or for any purpose, in part or in whole, is not permitted without the prior written consent of AUDI AG. AUDI AG does not guarantee or accept any liability for any errors in the content or in the use of this document. Copyright by AUDI AG.

Downloaded from www.Manualslib.com manuals search engine

Note

- *The chemical materials (stop leak additive) for sealing leaks in the refrigerant circuit offered on the market are not approved by Audi AG. There are no permanent- ,validity or material compatibility tests. Therefore damage or malfunctions in the A/C system or the A/C Service Station cannot be excluded.*
- *The stop leak additives offered on the open market have different physical and chemical properties, which can impair the function of the A/C system and the A/C Service Station and can even shut down the system completely.*
- *Audi does not approve the use of chemicals to seal leaks in the refrigerant circuit (leak stop additives).*
- *Chemical materials to seal leaks in the refrigerant circuit react with air or the moisture in the air and form deposits in the refrigerant circuit and the A/C service station that lead to malfunctions in the valves and other components that come into contact with such chemicals. These deposits cannot be removed completely from the components, even by flushing.*
- *It is not possible to recognize chemical substances to seal leaks in the refrigerant circuit (leak stop additive) and the label that is supposed to come with them is usually not there. Therefore be careful when working with if you do not know its service history.*
- *Accessories offer containers used to separate out these chemicals (used to seal leaks in the refrigerant circuit). Since Audi does not know composition and the physical and chemical properties of these materials, it is not possible to make a statement about their effectiveness and the deposition rate of these filters.*
- *The Filter for sealants -VAS 6592- offers a certain protection for the A/C service station. This filter is incorporated between the A/C service station and the Service connection on the low pressure side of the refrigerant circuit in a vehicle (the A/C service station may not be connection to the service connection of the high pressure side of the refrigerant circuit for draining, evacuating and measuring). This filter separate certain materials that were added to seal leaks in the refrigerant circuit. It prevents these materials from getting into the refrigerant and refrigerant oil in the A/C service station unchecked and doing damage. For the protection to work, it is necessary that the filter be changed in regular intervals and exactly according to the manufacturer specifications (described in the instructions provided). Audi does not support using chemical materials (stop leak additives) for sealing leaks in the refrigerant circuit. There are many different formulas of these chemicals (stop leak additives), that are offered as "sealant for refrigerant circuits" and it is not possible to make a statement about the effectiveness of the Filter for sealants -VAS 6592- .*

Protected by copyright. Copying for private or commercial purposes, in part or in whole, is not permitted unless authorised by AUDI AG. AUDI AG does not guarantee or accept any liability with respect to the correctness of information in this document. Copyright by AUDI AG.

If the refrigerant circuit gets filed with a chemical material (stop leak additive) to seal any leaks (or if there is a suspicion of this) and if it then necessary to perform a repair to the refrigerant circuit, then it is necessary to inform the customer of the following:

- It is not possible to evacuate the refrigerant from the A/C system due to the stop leak additive that has been added to the system because it will damage the A/C Service Station. It will necessary to hire an outside company the can evacuate the contaminated refrigerant with a suitable device and then dispose of it (for example, a local waste management company that specializes in disposing of refrigerant).

Downloaded from www.Manualslib.com manuals search engine

- It will be necessary to replace any refrigerant circuit components that have come in contact wit the stop leak additive in order to repair the A/C system properly. Certain refrigerant circuit components may already be damaged by the stop leak additive (for example, the A/C compressor regulator valve - N280-) or will get damaged if they are used over again and will fail after a short amount of time. In addition to this, if there is any sediment from the stop leak additive still in the circuit, it could come loose at a later point and cause the A/C system to fail again (currently it is not possible to clean these components with any workshop tools).

Working on the A/C system refrigerant circuit

- Service station, important usage information, refer to ⇒ page 82 .
- Servicing station, connecting for measuring and testing, refer to ⇒ “2.4.5 Connecting for Measuring and Testing, One Service Connection“, page 84 .
- Discharge refrigerant circuit using service station, refer to ⇒ “2.4.9 Draining Refrigerant Circuit“, page 87 .
- Discharging refrigerant circuit using service station, refer to ⇒ “2.4.11 Evacuating Refrigerant Circuit“, page 89 .
- Refrigerant circuit, charging with service station, refer to ⇒ “2.4.3 Charging Refrigerant Circuit“, page 83 .
- A/C system, operating after charging, refer to ⇒ “2.4.1 A/C System, Operating after Charging“, page 79 .
- Transferring refrigerant to reservoir (charging cylinder or reservoir bottle) of service station, refer to ⇒ “2.4.12 Transferring Refrigerant To Reservoir (Charging Cylinder Or Reservoir Bottle) Of Service Station“, page 93 .
- Service station, draining, refer to ⇒ “2.4.10 Draining Service Station“, page 88 .

Protected by copyright. Copying for private or commercial purposes, in part or in whole, is not permitted. Distribution to third parties, in any form, is prohibited. Audi AG does not guarantee or accept any liability with respect to the correctness of information in this document. Copyright by AUDI AG.

Service Station, Important Usage Information

Observe the following with regard to service station operation (e.g. V.A.G 1885). Refer to Special Tools and Equipment Catalog:

– The filters and dryers installed must be replaced at the latest on completion of the service life specified in the relevant operating instructions.

– If a service station is also used for flushing the refrigerant circuit, dryer and filter must be replaced in shorter intervals. Refer to ⇒ “1.4.12 Refrigerant Circuit Flushing With Compressed Air and Nitrogen “, page 29 .

– Exclusive use is to be made of refrigerant oils which have been approved for the vehicle-specific refrigerant circuit (if necessary, fill refrigerant oil directly into refrigerant circuit). Refer to Electronic Parts Catalog (ETKA).

Extracted refrigerant is not to be reused if there is any doubt about the composition of the refrigerant extracted, even after cleaning in the service station.

– The service station is to be drained in all these cases, refer to ⇒ “2.4 A/C Service Station“, page 79 , the system cleaned if necessary and the filters, dryers and refrigerant oil replaced.

– For example, within Germany, contaminated refrigerant can be returned to the supplier in recycling containers for recycling or for environmentally safe disposal. Other or additional regulations may apply in other countries.

Downloaded from www.Manualslib.com manuals search engine

Commercially available service stations can be classified in 2 groups:

- A. Service stations which clean extracted refrigerant for use (so-called extraction and recycling stations), for example, V.A.G 1885 (currently available service stations refer to Special Tools and Equipment Catalog).
- B. Service stations which transfer extracted refrigerant to recycling containers (for large-scale recycling). These are referred to as extraction systems.

2.4.3 Charging Refrigerant Circuit

Protected by copyright. Copying for private or commercial purposes, in part or in whole, is not permitted unless authorised by AUDI AG. AUDI AG does not guarantee or accept any liability with respect to the correctness of information in this document. Copyright by AUDI AG.

Note

The entire refrigerant charge can be added to either on the high or low pressure side. Refer to
⇒ "3.4 Refrigerant Oil Capacities", page 119 .

- The work procedure is always to be performed as described in the operating instructions for the A/C service station.
- Before pouring in refrigerant, correct the quantity of refrigerant oil, refer to ⇒ "3.4 Refrigerant Oil Capacities", page 119 .
- Make sure the A/C service station is standing at the same level as the vehicle (maximum difference: 50 cm) when charging the refrigerant circuit. If a difference in height is large enough, a difference between the amount of refrigerant displayed on the service station and amount actually filled in the circuit will result (depending on the version of the A/C service station). The ability of the A/C Service Station to perform an exact filling can change.

– Switch off the ignition.

– Discharging refrigerant circuit using service station. Refer to ⇒ "2.4.11 Evacuating Refrigerant Circuit", page 89 .

– Screw out handwheel at quick-release coupling adapter (to close it).

– Allow refrigerant to flow into charging hose.

– Check charging cylinder

– Screw in handwheel at quick-release coupling adapter (to open it) and charge with the specified quantity of refrigerant.

– Switch off service station.

2.4.4 Connecting for Measuring and Testing, Two Service Connections

Connecting on vehicles with connections on low- and high pressure side of refrigerant circuit

– Switch off the ignition.

– Connect service station to power supply.

– Connect quick-release coupling adapter to charging hoses of service station (handwheels not screwed in/hand shut-off valve not open).

– Switch on service station and evacuate charging hoses (only necessary if there is air in charging hoses).

– Switch off service station.

– Remove caps from service connections (with valve).

Downloaded from www.Manualslib.com manuals search engine

– Connect service station via service connections with quick-release coupling adapters to vehicle refrigerant circuit.
– Screw in handwheel of quick-release coupling adapters only until valves are definitely open at refrigerant circuit connection (observe pressure gauge, do not strain valves).
– Perform planned tests and measurements.

2.4.5 Connecting for Measuring and Testing, One Service Connection

Special tools and workshop equipment required

- ♦ Valve Adapters -V.A.G 1785/9-
- ♦ -V.A.G 1785/10- or Air Conditioning Adapter Set -V.A.G 1786-
- • Work procedure may vary depending on the type of tools selected (the tool-specific operating instructions should therefore be followed).

Note

The work procedure is always to be performed as described in the operating instructions for the A/C service station.

The charging hoses are to be connected as follows to prevent the entry of air or moisture into the refrigerant circuit:

– Switch off the ignition.
– Connect service station to power supply.
– Remove the caps from the service connections or connections with valve (refer to vehicle-specific refrigerant circuit). Refer to ⇒ Heating, Ventilation and Air Conditioning; Rep. Gr. 87 , Removal and Installation (vehicle-specific repair manual).
– Evacuate charging hoses if necessary.
– Connect quick-release coupling to service connection of refrigerant circuit.

Protected by copyright. Copying for private or commercial purposes, in part or in whole, is not permitted unless authorised by AUDI AG. AUDI AG does not guarantee or accept any liability with respect to the correctness of information in this document. Copyright by AUDI AG.

WARNING

- ♦ ***Never open valves on low or high-pressure side with engine running. Otherwise, compressor or service station could be destroyed by a short circuit between high and low-pressure sides of refrigerant circuit if air conditioning system is switched on.***

– Only tighten the handwheel in the quick-release coupling just enough so the service connection is open. Watch the pressure gauge and do not place too much pressure on the valve.
– Start the engine and perform the planned tests and measurements.
– Compare values determined to specified measured values. Refer to ⇒ “4.4 Pressures, Checking“, page 153 .
– Before disconnecting quick-release coupling, close it by screwing out handwheel.

Downloaded from www.Manualslib.com manuals search engine

Vehicles with only one service connection

Note

Screw -V.A.G 1785/9- , -V.A.G 1785/10- or -V.A.G 1786- to refrigerant circuit connections with valve and bleed charging hoses during connection to adapters (faintly audible escape of refrigerant gas is permitted).

Protected by copyright. Copying for private or commercial purposes, in part or in whole, is not permitted unless authorized by AUDI AG. AUDI AG does not guarantee or accept any liability with respect to the correctness of information in this document. Copyright by AUDI AG.

– The charging hose must be installed with a valve opener for opening valve in valve adapter.

2.4.6 Connecting for Measuring and Testing, No Service Connection

On the following vehicles, no service connection is provided for the service station on the low-pressure side of the refrigerant circuit; adapters must be used to connect the service station to the refrigerant circuit on these vehicles:

- Audi 80, Audi Cabrio, Audi Coupe
- Audi A4 up to 07.96
- Audi 100/ Audi A6 up to 03.97
- Audi A8 up to 11.97

Note

On vehicles with no or inaccessible connection at compressor, remove A/C Refrigerant Low Pressure Switch -F73- (bridge terminals in connector to A/C Refrigerant Low Pressure Switch -F73-) and screw adapter to this connection. Refer to ⇒ Heating, Ventilation and Air Conditioning; Rep. Gr. 87 ; Removal and Installation (vehicle-specific repair manual).

Note

- *The tools listed below are commercially available or can be obtained from local distributor or importer.*
- *Should it be necessary to measure pressures at switch connections on high-pressure side, use Adapter set for refrigerant circuit -V.A.G 1785/9- and proceed in the same manner.*

- Service station, connecting with Air conditioning adapter set -V.A.G 1786- to refrigerant circuit, refer to ⇒ “2.4.7 Connecting With Air Conditioning Adapter Set V.A.G 1786 “, page 86
- Service station, connecting with adapter V.A.G 1785/10 to refrigerant circuit, refer to ⇒ “2.4.8 Connecting With Adapter Set VAG1785/10 “, page 87 .

Servicing Station, Connecting for Measuring and Testing

– Switch off the ignition.

– Connect service station to power supply.

– Assemble adapter set and screw to connection on low-pressure side.

Downloaded from www.Manualslib.com manuals search engine

– Connect quick-release coupling adapter to charging hoses of service station (handwheels not screwed in/hand shut-off valve not open).
– Switch on service station and evacuate charging hoses (only necessary if there is air in charging hoses).
– Switch off service station.
– Remove the cap from service connection/connection with valve (or remove low-pressure switch and bridge respective electrical connections).
– Connect service station via service connections with quick-release coupling adapters to vehicle refrigerant circuit.
– Install the handwheel on the quick-release coupling adapters only until valve is definitely open at refrigerant circuit connection (observe pressure gauge, do not strain valve).
– Perform planned tests and measurements.

Protected by copyright. Copying for private or commercial purposes, in part or in whole, is not permitted unless authorised by AUDI AG. AUDI AG does not guarantee or accept any liability with respect to the correctness of information in this document. Copyright by AUDI AG.

2.4.7 Connecting With Air Conditioning Adapter Set -V.A.G 1786-

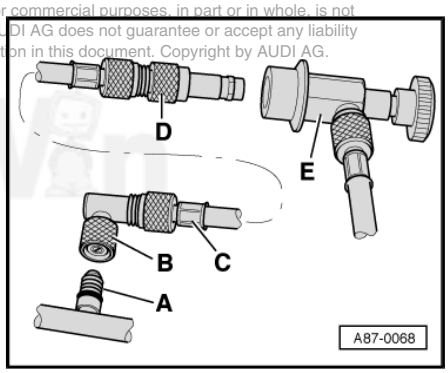

A - Connection with valve (small valve insert) on low-pressure side of refrigerant circuit

B - Adapter with union nut -V.A.G 1786/1-

C - Commercially available charging hose (short version with 5/8" thread on each end).

D - Adapter with service connection -V.A.G 1786/2- (for connection of quick-release coupling of service station -E-).

Note

- *Assemble adapter and charging hose as shown and connect to connection with valve -A- first.*
- *The Adapter with union nut -V.A.G 1786/1- is only to be used at connections with small valve insert (standard for connection with valve for A/C Refrigerant Low Pressure Switch -F73- and gradually introduced as of 10.94 also at compressor).*
- *Instead of Adapter with union nut -V.A.G 1786/1- , also Adapter -V.A.G 1785/10- can be used (remove valve from Adapter -V.A.G 1785/10- or install valve opener in charging hose).*

Downloaded from www.Manualslib.com manuals search engine

2.4.8 Connecting With Adapter Set - VAG1785/10-

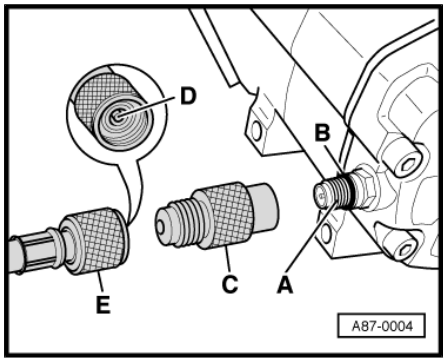

– Remove the cap from the connection with valve -A- (at A/C compressor).

– Attach O-ring -B- to connection (8.9 mm; 1.8 mm).

– Screw adapter V.A.G 1785/10 -C- to connection -B-.

– Install valve opener -D- with appropriate seal in charging hose connection.

Note

- *The type of valve opener -D- and seals required depends on charging hose used (specific to manufacturer).*
- *The quick-release coupling adapter is not required for connection on the low-pressure side of Audi vehicles.*
- *Screw charging hose -E- (to service station) to Adapter - V.A.G 1785/10- .*

Note

To minimize the amount of air and moisture penetrating into the charging hoses and thus into the refrigerant circuit, the charging hoses should be connected together as illustrated.

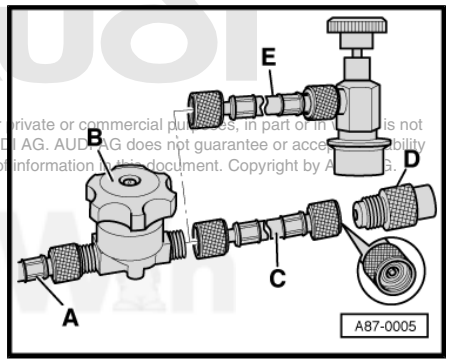

A - Charging hose to service station

B - Hand shut-off valve

C - Charging hose (short version) with valve opener for connection to adapter -D-

D - Adapter - V.A.G 1785/10-

E - Charging hose (short version) with quick-release coupling adapter (for vehicles with quick-release coupling adapter on low-pressure side).

– Perform planned tests and measurements.

2.4.9 Draining Refrigerant Circuit

- Work procedure may vary depending on the type of tools selected (the tool-specific operating instructions should therefore be followed).
- The refrigerant circuit is to be discharged if parts of the refrigerant circuit are to be removed, if there is any doubt about the quantity of refrigerant in the circuit or if safety precautions so require.
- All the necessary usage information for working with the refrigerant service station can be found in the service station operating instructions.

Draining

– Switch off the ignition.

– Connect service station in line with operating instructions to vehicle service connections (refer to vehicle-specific refrigerant circuit) and start up service station. Refer to ⇒ Heating,

Downloaded from www.Manualslib.com manuals search engine

Ventilation and Air Conditioning; Rep. Gr. 87 ; General Information (vehicle-specific repair manual).

Note

- *There is a possibility of refrigerant oil being extracted from the refrigerant circuit together with the refrigerant. To ensure compressor lubrication, the refrigerant oil in the circuit must be topped up with fresh oil. Refer to* *⇒ "3.4 Refrigerant Oil Capacities", page 119* .
- *On vehicles fitted with a compressor with no A/C clutch (with A/C compressor regulator valve -N280-) the engine should not be run for longer than absolutely necessary with the refrigerant circuit empty (A/C compressor always in operation as well).*
- *On vehicles with a compressor with no A/C clutch, the engine is only to be started following complete assembly of the refrigerant circuit (avoid high engine speeds).*
- *Depending on the A/C compressor version, there may be a valve installed on the high pressure side of the A/C compressor, which prevents the liquid refrigerant from flowing back into the compressor once the A/C is turned off. If an A/C compressor with this valve is installed in a vehicle with a refrigerant circuit having an expansion valve, then it may take some time until the pressure in the high pressure side decreases (the expansion is cold and the pressure in the low pressure side quickly increases after it is turned off, the expansion valve closes and the refrigerant flows slowly into the low pressure side). If the A/C compressor is switched on (or the refrigerant circuit is evacuated on the low pressure side) the pressure on the low pressure side goes down, the expansion valve open and the refrigerant can flow of the low pressure side.*

Protected by copyright. Copying for private or commercial purposes, in part or in whole, is not permitted unless authorised by AUDI AG. AUDI AG does not guarantee or accept any liability with respect to the correctness of information in this document. Copyright by AUDI AG.

2.4.10 Draining Service Station

Note

- *If it is necessary to drain the service station (for example, due to extraction of contaminated refrigerant), all filters and dryers must always be replaced (do not remove filter and dryer from the air-tight packaging until immediately before installation to minimize moisture absorption).*
- *Refrigerant containers filled with contaminated used refrigerant are referred to as "Recycling containers".*
- *Always evacuate recycling containers prior to initial filling with refrigerant (if there is air in a refrigerant container it is not to be filled with refrigerant).*
- *Different types of refrigerant are not to be mixed (refrigerant mixtures cannot be recycled and are to be disposed of). If there is any doubt about the composition of the contents of the container, the refrigerant recycling company is to be informed accordingly.*

Downloaded from www.Manualslib.com manuals search engine

Caution

- *When filling recycling containers (compressed-gas vessels), observe applicable regulations, technical rules and laws.*
- *Recycling containers are never to be overfilled. Overfilled containers do not have a sufficient gas cushion to accommodate the liquid expansion caused by the effects of heat. There is a danger of rupture.*
- *To ensure safety, make exclusive use of recycling containers fitted with a safety valve.*
- *Recycling containers must be weighed on calibrated scales during the filling process. The maximum permissible capacity is 75% (charge factor 0.75) of the charge weight indicated on the recycling container (the possibility of refrigerant oil entering the recycling container along with the refrigerant cannot be ruled out).*

Protected by copyright. Copying for private or commercial purposes, in part or in whole, is not permitted unless authorised by AUDI AG. AUDI AG does not guarantee or accept any liability with respect to the correctness of information in this document. Copyright by AUDI AG.

2.4.11 Evacuating Refrigerant Circuit

- The work procedure is always to be performed as described in the operating instructions for the A/C service station.
- Quantity of refrigerant oil in circuit checked and if necessary corrected. Refer to ⇒ “3.4 Refrigerant Oil Capacities“, page 119 .
- Check quantity of refrigerant in the service station.

The refrigerant circuit must be evacuated before it is filled with refrigerant (vacuum). Moisture is also extracted from the circuit.

Leaks may be found when evacuating the refrigerant circuit.

Evacuating

Caution

- *Do not start the engine during the evacuation process or when there is a vacuum in the refrigerant circuit.*
- *The A/C compressor could be damaged if the engine is started when there is a vacuum in the refrigerant circuit.*
- *Only start the engine when the refrigerant circuit is filled.*

– Switch off the ignition.

– Connect service station to power supply.

– Connect charging hose of service station to vehicles refrigerant circuit with quick-release coupling adapter (refer to vehicle-specific refrigerant circuit). Refer to ⇒ Heating, Ventilation and Air Conditioning; Rep. Gr. 87 ; General Information (vehicle-specific repair manual).

– Only tighten the handwheel on the quick-release coupling adapter just enough so the valves in the service connections are securely open. Do not put too much pressure on the valve.

Downloaded from www.Manualslib.com manuals search engine

Note

If pressure is to be measured after charging system on vehicles with a service connection on one side of the refrigerant circuit only, use valve adapter and charging hose with valve opener. Refer to
⇒ "2.4.5 Connecting for Measuring and Testing, One Service Connection", page 84 .

– Switch on service station and evacuate refrigerant circuit for at least 30 minutes. The pressure reading must indicate an absolute pressure of less than 10 mbar (corresponding to 990 mbar vacuum).

Note

At this pressure, both green LEDs light for example on service station V.A.G 1885 (currently available service stations, refer to Special Tools and Equipment Catalog).

– Switch off service station and allow to stand for at least 1 hour.

• If the vacuum display (LED chain) does not change, the system is free of leaks and can be charged.

Note

♦ *A current vacuum reading (LED) is only obtained using V.A.G 1885, for example (currently available service stations refer to Special Tools and Equipment Catalog) after pressing the "Evacuate" button again.*

♦ *If with this service station the upper (green) LEDs do not light immediately after switching on, either the refrigerant circuit is leaking or there is still residual moisture/refrigerant in the circuit.*

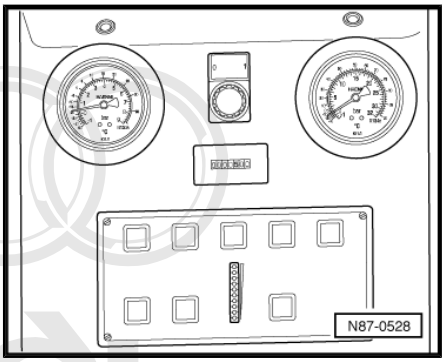

If the vacuum is not maintained or cannot generate a sufficient vacuum, perform the following:

♦ Did the pressure in refrigerant circuit increase slowly after evacuating, for example, through evaporation.

– If it is possible that the refrigerant circuit may have leaks, evacuate and check the vacuum display again over several hours Only when the vacuum is maintained can the refrigerant circuit be charged.

– If the refrigerant circuit is sealed, it can be filled.

♦ If there is a leak that allowed enough air to enter during evacuation that the A/C service station cannot generate a sufficient vacuum or that the vacuum is lost immediately after switching the A/C service station off:

– Determine the location of the leak in the refrigerant circuit as follows:

This document is copyright. Copying for private or commercial purposes, in part or in whole, is not permitted unless authorised by AUDI AG. AUDI AG does not guarantee or accept any liability with respect to the correctness of information in this document. Copyright by AUDI AG.

Downloaded from www.Manualslib.com manuals search engine

Protected by copyright. Copying for private or commercial purposes, in part or in whole, is not permitted unless authorised by AUDI AG. AUDI AG does not guarantee or accept any liability with respect to the correctness of information in this document. Copyright by AUDI AG.

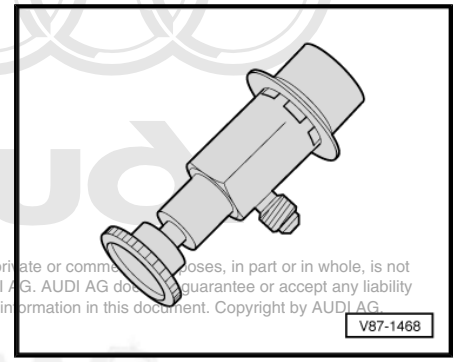

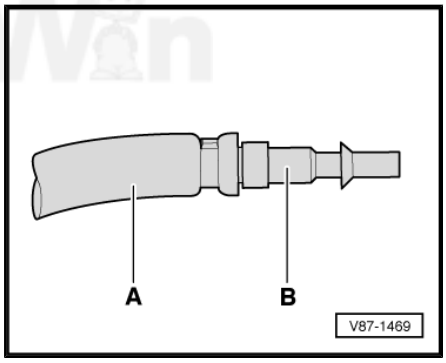

Downloaded from www.Manualslib.com manuals search engine

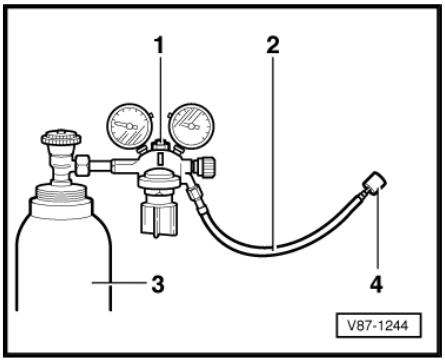

Note

- *A large leak can be identified if a maximum of pressure of 15 bar can be generated in the refrigerant circuit using clean, dry compressed air or nitrogen. Refer to ⇒ "1.4.12 Refrigerant Circuit Flushing With Compressed Air and Nitrogen ", page 29 . If the leak is large enough, the sound of escaping air or gas can be heard at the location of the leak.*
- *Add the compressed air or nitrogen to the closed refrigerant circuit through the service connection after fitting it with a quick-release connector adapter.*
- *The quick-release coupling adapter for service connections can be connected to the air compressor using a modified filler hose -A- (for example, with 5/8" 18 UNF threads, different from the threads on the quick-release coupling adapter) and a suitable adapter -B-. Refer to ⇒ "6.2 Improvised Tools", page 203 . This keeps humidity, oil and dirt coming out of the workshop compressed air system from getting into the A/C refrigerant circuit. Also use a combination fine-gauge filter for compressed air systems such as those that are standard in paint shops. Install it between the compressed air system and the filler hose -A- . Refer to the Special Tools and Equipment Catalog.*
- *A compressed gas cylinder filled with nitrogen -3- can be connected to the closed refrigerant circuit using a pressure gauge battery with a pressure reducer for nitrogen (maximum reduction pressure: 15 bar) -1- and a filler hose -2- (for example, with 5/8" 18 UNF threads) connected to the service connection. A quick-release coupling adapter must also be connected to the service connection. Refer to ⇒ "6.2 Improvised Tools", page 203 .*

– Slowly increase the pressure in the refrigerant circuit to a maximum of 15 bar.

WARNING

- ***Nitrogen can leak uncontrolled from the cylinder.***
- ***Make exclusive use of pressure reducers for nitrogen cylinders (maximum work pressure 15 bar).***
- ***When testing for leaks with nitrogen (maximum permissible pressure 15 bar), always work with a pressure reducer for nitrogen bottles.***
- ***Use appropriate extraction units to draw off gas mixture escaping from components.***

Protected by copyright. Copying for private or commercial purposes, in part or in whole, is not permitted unless authorised by AUDI AG. AUDI AG does not guarantee or accept any liability with respect to the correctness of information in this document. Copyright by AUDI AG.

– Find the location of the leak by listening for the sound of venting gas.

– Repair the leak.

– Evacuate and again observe the vacuum display over a period of hours. Only when the vacuum is maintained can the refrigerant circuit be charged.

- If there is a leak that is small enough that no air or very little air vents through it and the A/C service station can generate a sufficient vacuum: The vacuum indicator does not increase after switching the A/C system service station or only increases slowly, indicating that air is only entering through a small leak.

Downloaded from www.Manualslib.com manuals search engine

– Add 100 grams of refrigerant to the circuit, find the location of the leak using an electronic leak detector and repair it. Refer to ⇒ “4.2.2 Refrigerant Circuit, Tracing Leaks Using Electronic Leak Detector V.A.G 1796“, page 144 . Or add UV contrast dye to the refrigerant and find the location of the leak with the leak detection system VAS 6201 and repair it. Refer to ⇒ “4.2.3 Refrigerant Circuit, Tracing Leaks Using Leak Detection System VAS 6201“, page 144 .

– Empty the refrigerant circuit, if necessary. Refer to ⇒ “2.4.9 Draining Refrigerant Circuit“, page 87 .

– Evacuate and check the vacuum display again over several hours. Only when the vacuum is maintained can the refrigerant circuit be charged.

2.4.12 Transferring Refrigerant To Reservoir (Charging Cylinder Or Reservoir Bottle) Of Service Station

- The work procedure is always to be performed as described in the operating instructions for the A/C service station.
- A certain quantity of refrigerant is specified as charge for each air conditioning system. To ensure that neither too much nor too little refrigerant is added (either would reduce the cooling output), the charging cylinder has a scale indicating the weight.
- The volume of a refrigerant changes as a function of pressure. The scale must therefore be set according to the pressure in the charging cylinder.

Protected by copyright. Copying for private or commercial purposes, in part or in whole, is not permitted unless authorised by AUDI AG. AUDI AG does not guarantee or accept any liability with respect to the correctness of information in this document. Copyright by AUDI AG.

Note

Do not completely drain the reservoir (charging cylinder or bottle) as the liquid column boundary layer cannot be traced in the tube during filling (outside visible range).

WARNING

Do not overfill. A completely filled reservoir (charging cylinder or bottle) will explode when the temperature rises.

Downloaded from www.Manualslib.com manuals search engine

3 Specifications

⇒ “3.1 Charging Refrigerant“, page 94

⇒ “3.2 Refrigerant R134a Capacities“, page 94

⇒ “3.3 Refrigerant Oils“, page 117

⇒ “3.4 Refrigerant Oil Capacities“, page 119

3.1 Charging Refrigerant

Note

- *When charging the high-pressure side of refrigerant circuits, always use maximum amount of refrigerant (some of the refrigerant remains in the charging hoses).*
- *The specified capacities for refrigerant R134a apply if no other different specifications given for the S and RS.*
- *Make sure the A/C service station is standing at the same level as the vehicle (maximum difference: 50 cm) when charging the refrigerant circuit. If a difference in height is large enough, a difference between the amount of refrigerant displayed on the service station and amount actually filled in the circuit will result (depending on the version of the A/C service station). The ability of the A/C Service Station to perform an exact filling can change.*
- *For compressor allocation (Zexel / Valeo, Sanden or Denso / Nippondenso) refer to the Electronic Parts Catalog (ETKA) and to ⇒ Heating, Ventilation and Air Conditioning; Rep. Gr. 87 ; Removal and Installation (vehicle-specific repair manual).*
- *Refrigerant circuits converted from R12 to R134a are to be filled with the quantity indicated in the repair manual “Air conditioner with refrigerant R12“. Refer to Air conditioner with refrigerant R12. (This repair manual is only available in hard copy).*
- *Beginning the production year 2006, the name of the Zexel A/C compressor was changed from Zexel to Valeo.*

Copyright by AUDI AG.

3.2 Refrigerant R134a Capacities

- ⇒ “3.2.1 Capacities, Audi A1 (8X_) from MY 11“, page 95
- ⇒ “3.2.2 Capacities, Audi A2 (8Z_) from MY 01“, page 95
- ⇒ “3.2.3 Capacities, Audi A3 (8L_) 1997 through MY 2004 and Audi TT (8N_), from MY 1999“, page 96
- ⇒ “3.2.4 Capacities, Audi A3 (8P_) from MY 04“, page 99
- ⇒ “3.2.5 Capacities, Audi TT (8J_) from MY 07“, page 100
- ⇒ “3.2.6 Capacities, Audi 80 (8A_/8C_), Audi Coupe (8B_) and Audi Cabriolet (8G_), from MY 2002“, page 101
- ⇒ “3.2.7 Capacities, Audi A4 (8D_), from MY 95 “, page 101
- ⇒ “3.2.8 Capacities, A4 (8E_) 01 and Audi A4 Cabriolet (8H_), from MY 03“, page 104
- ⇒ “3.2.9 Capacities, Audi A4 (8K_) from MY 2008, Audi A5 Coupe (8T_) from MY 2008, Audi Q5 (8R_) from MY 2008 and Audi A5 Cabriolet (8F_) from MY 2009“, page 105
- ⇒ “3.2.10 Capacities, Audi 100 and Audi A6 (4A_), from MY 98“, page 106

Downloaded from www.Manualslib.com manuals search engine

- ⇒ “3.2.11 Capacities, Audi A6 (4B_) from MY 1998 and Audi allroad (4B_) from MY 2005“, page 107
- ⇒ “3.2.12 Capacities, Audi A6 (4F_), from MY 05“, page 112
- ⇒ “3.2.13 Capacities, Audi A6 (4G_) from MY 11 and Audi A7 (4G_) from MY 11“, page 113
- ⇒ “3.2.14 Capacities, Audi V8 (4C_) from MY 94“, page 113
- ⇒ “3.2.15 Capacities, Audi A8 (4D_) from MY 94“, page 114
- ⇒ “3.2.16 Capacities, Audi A8 (4E_) from MY 03“, page 115
- ⇒ “3.2.17 Capacities, Audi A8 (4H_) from MY 10“, page 115
- ⇒ “3.2.18 Capacities, Audi Q7 (4L_), from MY 06“, page 116
- ⇒ “3.2.19 Capacities, Audi R8 (42_) from MY 08“, page 116

3.2.1 Capacities, Audi A1 (8X_) from MY 11

Features of the refrigerant system:

- Expansion Valve
- Fluid Reservoir
- Denso, Sanden (or Delphi) with A/C compressor regulator valve -N280- . Refer to ⇒ Heating, Ventilation and Air Conditioning; Rep. Gr. 87 ; Removal and Installation and Electronic Parts Catalog (ETKA).

Vehicle Model	Production Period	Capacity in Grams	Differing Features Of This Refrigerant Circuit
Audi A1	As of 08.10	500 + / - 15	• None

Note

- *Depending on time period of production and depending on engine, different A/C compressors are installed (these A/C compressors do not have an A/C clutch)*
- *At Start Of Production, A/C compressors manufactured by Denso type 6 SEU 14C or Sanden type 7 PXE 16 were installed. Refer to Electronic Parts Catalog (ETKA) and ⇒ Heating, Ventilation and Air Conditioning; Rep. Gr. 87 ; Removal and Installation .*
- *Depending on the engine, an A/C compressor manufactured by Delphi type 6 CVC 140 will be installed at a later point in time (introduction still open). Refer to Electronic Parts Catalog (ETKA) and ⇒ Heating, Ventilation and Air Conditioning; Rep. Gr. 87 ; Removal and Installation .*

Protected by copyright. Copying for private or commercial purposes, in part or in whole, is not permitted unless authorised by AUDI AG. AUDI AG does not guarantee or accept any liability with respect to the correctness of information in this document. Copyright by AUDI AG.

3.2.2 Capacities, Audi A2 (8Z_) from MY 01

Features of the refrigerant system:

- Restrictor (colored).
- Reservoir.
- A/C compressor manufacturer Denso without A/C clutch and with A/C Compressor Regulator Valve -N280-

Downloaded from www.Manualslib.com manuals search engine

Vehicle Model	Production Period	Capacity in Grams	Differing Features Of This Refrigerant Circuit
Audi A2	From 06.00 to 07.01	525 + / - 25	• Yellow colored restrictor • Condenser with part no. 8Z0 260 401 (403) and index B or C
	As of 07.01	500 + / - 25	• Red colored restrictor • Condenser part number 8Z0 260 401 (403) with index D.

Note

- *Replacement restrictors with different holes are available (yellow colored 1.54 mm, red colored 1.42 mm).*
- *Depending on manufacturer, color of red restrictor may tend more towards orange.*
- *To avoid altering the cooling output of the air conditioner, restrictors with the same hole diameter must only be installed.*
- *A restrictor with a smaller hole (red colored) and a condenser with smaller internal volume were introduced as of model year 2002. The capacity has therefore been slightly modified (condenser -70 g, smaller restrictor +50 g). Refer to Electronic Parts Catalog (ETKA) and ⇒ Heating, Ventilation and Air Conditioning; Rep. Gr. 87 ; Description and Operation .*

Protected by copyright. Copying for private or commercial purposes, in part or in whole, is not permitted unless authorised by AUDI AG. AUDI AG does not guarantee or accept any liability with respect to the correctness of information in this document. Copyright by AUDI AG.

3.2.3 Capacities, Audi A3 (8L_) 1997 through MY 2004 and Audi TT (8N_), from MY 1999

Features of the refrigerant system:

- Expansion Valve
- Fluid Reservoir
- A/C compressor manufactured by Sanden or Zexel / Valeo. Refer to Electronic Parts Catalog (ETKA) and ⇒ Heating, Ventilation and Air Conditioning; Rep. Gr. 87 ; Removal and Installation .

Capacities Audi A3 (8L_) 1997 up to 2004

Vehicle model	Production period	Capacity in grams	Differing features of this refrigerant circuit
Audi A3	As of 08.96	750 + 50	• None

Downloaded from www.Manualslib.com manuals search engine

Note

- *Exclusive use was made at the start of production of Sanden A/C compressors. As of model year 1999, use was also made of Zexel compressors. Refer to ⇒ Heating, Ventilation and Air Conditioning; Rep. Gr. 87 ; Description and Operation and Electronic Parts Catalog (ETKA).*
- *If no condenser with a flat pipe width of 20 mm is available for Audi A3 as a replacement part, and a condenser with a flat pipe width of 16 mm is installed, only 650 + / - 20 g of refrigerant instead of 750 + 50 g may be filled in. In addition, capacity specification must be changed accordingly on sticker (to do so, please observe notes for Audi TT ⇒ page 98).*
- *Beginning the production year 2006, the name of the Zexel A/C compressor was changed from Zexel to Valeo.*

Capacities Audi TT (8N_) from MY 99

Vehicle model	Production period	Capacity in grams	Differing features of this refrigerant circuit
Audi TT	As of 10.98 up to 10.03 (and as of 06.04 up to 08.04 ⇒ page 98)	750 + 50	• Condenser with flat pipe width of 20 mm ⇒ page 98
	As of 10.03 (except 06.04 up to 08.04 ⇒ page 98)	650 $^{+}$ / $_{-}$ 20	• Condenser with flat pipe width of 16 mm ⇒ page 98

Protected by copyright. Copying for private or commercial purposes, in part or in whole, is not permitted unless authorised by AUDI AG. AUDI AG does not guarantee or accept any liability with respect to the correctness of information in this document. Copyright by AUDI AG.

Downloaded from www.Manualslib.com manuals search engine

Note

- *Exclusive use was made at the start of production of Sanden A/C compressors. As of model year 1999, use was also made of Zexel compressors. Refer to ⇒ Heating, Ventilation and Air Conditioning; Rep. Gr. 87 ; Description and Operation and Electronic Parts Catalog (ETKA).*
- *As of calendar year 2006, the Zexel / Valeo identification was changed to Valeo.*
- *There was a change in production for Audi TT as of 10.03 (from vehicle identification number (VIN) 8N41015239) from condenser with part number "1J0 820 411 J" (flat pipe width of 20 mm) to condenser with part number " 8N0 820 411 A" (flat pipe width of 16 mm) ⇒ page 98 . From 06.04 to 08.04, a certain number of vehicles not specified were equipped again with condensers having a flat pipe width of 20 mm.*
- *Condensers with a flat pipe width of 16 mm require 120 g less of refrigerant than condensers with flat pipe width of 20 mm. Refer to Electronic Parts Catalog.*
- *On the Audi TT, from 10.2003 (from VIN 8N41015239) through 06.04, a condensator with a 16 mm flat pipe width (part number " 8N0 820 411 A") was installed filled with 750 + 50 grams of refrigerant, and in addition to this, these vehicles have label with the incorrect filling quantity: 750 grams (or 700 grams in 06.04) instead of 650 grams ⇒ page 98 . Due to overfilling of the system, the A/C compressor may be switched off under certain circumstances (e.g. high ambient temperatures) since the pressure in the refrigerant circuit is too high; in addition, drivers may complain about the engine performance (for example, rumbling and buzzing sounds, the engine is heavier loaded as the A/C compressor is working steadily against the excessive pressure). Solution: drain refrigerant circuit, then refill correct capacity and replace sticker with one indicating correct capacity specification, or cross out wrong capacity specification on sticker and note correct capacity e.g. using a waterproof marker.*
- *If condenser is replaced, observe flat pipe dimensions. If a condenser with another flat pipe dimension is installed, the sticker specifying the capacity for refrigerant R134a is also to be replaced, or the old capacity specification is to be removed and the new capacity is to be noted, for example, using a waterproof marker. Refer to Electronic Parts Catalog.*

Copyright. Copying for private or commercial purposes, in part or in whole, is not permitted unless authorised by AUDI AG. AUDI AG does not guarantee or accept any liability with respect to the correctness of information in this document. Copyright by AUDI AG.

Determining Dimensions Of Flat Pipes From Condenser

- Flat pipes of condenser -A-
- Width of flat pipes -B-

Sticker For Capacity Of Refrigerant R134a

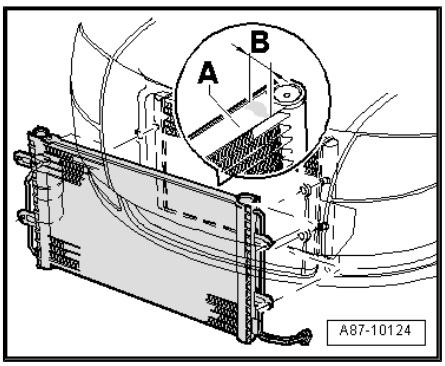

Downloaded from www.Manualslib.com manuals search engine

If condenser is replaced, observe flat pipe dimensions. If a condenser with different dimensions is installed, the sticker -A- specifying the capacity for refrigerant R134a is also to be replaced, or the old capacity specification is to be removed and the new capacity is to be noted, for example, using a waterproof marker. Refer to Electronic Parts Catalog.

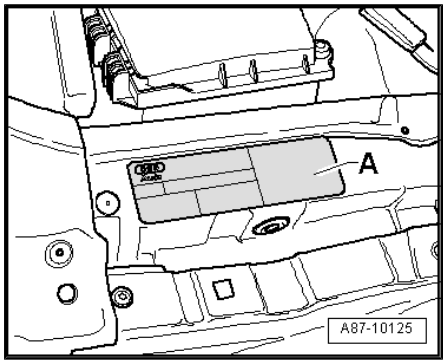

3.2.4 Capacities, Audi A3 (8P_) from MY 04

Note

Applies to the Audi A3, Audi A3 Sportback, Audi RS3 and Audi A3 Cabriolet.

Features of the refrigerant system:

- Expansion Valve
- Fluid Reservoir
- A/C compressor made by Denso, Delphi, Sanden or Zexel / Valeo with an A/C compressor regulator valve -N280- . Refer to ⇒ Heating, Ventilation and Air Conditioning; Rep. Gr. 87 ; Description and Operation and Electronic Parts Catalog (ET-KA).

Protected by copyright. Copying for private or commercial purposes, in part or in whole, is not permitted unless authorised by AUDI AG. AUDI AG does not guarantee or accept any liability with respect to the correctness of information in this document. Copyright by AUDI AG.

Vehicle model	Production period	Capacity in grams	Differing features of this refrigerant circuit
Audi A3 • With a 4-cylinder or 6-cylinder engine	As of 05.03	525 + / - 25	• None
Audi RS 3 • With 5-cylinder engine	As of 01.11	500 + / - 25	• A different version of the A/C compressor is installed. Refer to the Electronic Parts Catalog and to ⇒ Heating, Ventilation and Air Conditioning; Rep. Gr. 87 ; Description and Operation .

Downloaded from www.Manualslib.com manuals search engine

Note

- *Depending on time period of production and depending on engine, different A/C compressors are installed (these A/C compressors do not have an A/C clutch)*
- *At the start production, Denso 7 SEU 16 A/C compressors were installed. As of model year 2004, there was a running change to Denso compressor type 7 SEU 17.*
- *With a gradual introduction as of MY 2004 and depending on the engine, Zexel compressors (type DSC17E) and Sanden compressors (type PXE16) are installed. Refer to the Electronic Parts Catalog and ⇒ Heating and Air Conditioning; Rep. Gr. 87 ; Description and Operation .*
- *As of MY 2008, and depending on the engine, A/C compressors made by Denso (6 SEU 14) and Delphi are being installed. Refer to the Electronic Parts Catalog and ⇒ Heating and Air Conditioning; Rep. Gr. 87 ; Description and Operation .*
- *Beginning the production year 2006, the name of the Zexel A/C compressor was changed from Zexel to Valeo.*

3.2.5 Capacities, Audi TT (8J_) from MY 07

Protected by copyright. Copying for private or commercial purposes, in part or in whole, is not permitted unless authorised by AUDI AG. AUDI AG does not guarantee or accept any liability with respect to the correctness of information in this document. Copyright by AUDI AG.

Features of the refrigerant system:

- Expansion Valve
- Fluid Reservoir
- Denso or Sanden A/C compressors, with an A/C compressor regulator valve -N280- . Refer to ⇒ Heating, Ventilation and Air Conditioning; Rep. Gr. 87 ; Description and Operation and Electronic Parts Catalog (ETKA).

Vehicle model	Production period	Capacity in grams	Differing features of this refrigerant circuit
Audi TT • With a 4-cylinder or 6-cylinder engine	As of 08.06	525 $^{+}$ / $_{-}$ 25	• None
Audi TT • With 5-cylinder engine	As of 03.09	500 $^{+}$ / $_{-}$ 25	• A different version of the A/C compressor is installed. Refer to the Electronic Parts Catalog and to ⇒ Heating, Ventilation and Air Conditioning; Rep. Gr. 87 ; Removal and Installation .

Downloaded from www.Manualslib.com manuals search engine

Note

- *At the start of production, Denso A/C compressors 6 SEU 14 were installed; these A/C compressor do not have an A/C clutch (driven by the engine). Compressors from other manufacturers may also be installed at a later time, depending on the engine. Refer to ⇒ Heating, Ventilation and Air Conditioning; Rep. Gr. 87 ; Description and Operation and Electronic Parts Catalog (ETKA).*
- *As of MY 2008, on certain engines, Sanden A/C compressors (type PXE16) were installed; they do not have an A/C clutch (it is driven by the engine). Refer to ⇒ Heating, Ventilation and Air Conditioning; Rep. Gr. 87 ; Description and Operation and Electronic Parts Catalog (ETKA).*

3.2.6 Capacities, Audi 80 (8A_/8C_), Audi Coupe (8B_) and Audi Cabriolet (8G_), from MY 2002

Features of the refrigerant system:

- Restrictor (not colored).
- Reservoir
- A/C compressors made by Zexel / Valeo. Refer to ⇒ Heating, Ventilation and Air Conditioning; Rep. Gr. 87 ; Description and Operation and Electronic Parts Catalog (ETKA).

Vehicle model	Production period	Capacity in grams	Differing features of this refrigerant circuit
Audi 80 Audi Coupe Audi Cabriolet	As of 10.92	750 + 50 • Vehicles with 5-cylinder engine	• None
		650 + 50 • Vehicles with 4 or 6-cylinder engine	

Note

- *Replacement restrictors with different holes are available. If these vehicles are equipped with a yellow colored restrictor, add 50 g more refrigerant than specified in the table. After charging, amend capacity stated on label or affix label indicating new capacity.*
- *In order to distinguish between the two restrictor versions, the one with the smaller hole (1.54 mm) is yellow colored. The restrictor with the larger hole (1.83 mm) is not colored.*
- *Beginning the production year 2006, the name of the Zexel A/C compressor was changed from Zexel to Valeo.*

Protected by copyright. Copying for private or commercial purposes, in part or in whole, is not permitted unless authorised by AUDI AG. AUDI AG does not guarantee or assume any liability with respect to the correctness of information in this document. Copyright by AUDI AG.

3.2.7 Capacities, Audi A4 (8D_), from MY 95

Note

Applies also to the Audi RS 4

Downloaded from www.Manualslib.com manuals search engine

Features of the refrigerant system:

- Restrictor
- Reservoir
- A/C compressor manufactured by Denso or Zexel / Valeo. Refer to ⇒ Heating, Ventilation and Air Conditioning; Rep. Gr. 87 ; Description and Operation and Electronic Parts Catalog (ETKA).

Vehicle model	Production period	Capacity in grams	Differing features of this refrigerant circuit
Audi A4	From 11.94 to 11.97	650 + 50	• Restrictor (not colored)
	As of 11.97	700 + 50	• Restrictor colored (yellow) • Showa condenser (distinguishing feature ⇒ page 103)
	As of 11.98	550 + 50	• Restrictor colored (yellow) • AWG condenser (distinguishing feature ⇒ page 103)
Audi RS 4	As of May 2000	650 + 50	• Restrictor colored (yellow)

Protected by copyright. Copying for private or commercial purposes, in part or in whole, is not permitted unless authorised by AUDI AG. AUDI AG does not guarantee or accept any liability with respect to the correctness of information in this document. Copyright by AUDI AG.

Downloaded from www.Manualslib.com manuals search engine

Note

- *Restrictors with a modified hole have been installed at the factory since November 1997 (yellow colored). The capacity was increased by 50 g for vehicles with yellow colored restrictor.*
- *In order to distinguish between the two restrictor versions, the one with the smaller hole (1.54 mm) is yellow colored. The restrictor with the larger hole (1.83 mm) is not colored.*
- *The Audi A4 was equipped with different A/C compressors depending on engine and production period. Exclusive use was made at the start of production of Zexel / Valeo A/C compressors. As of MY 1996, Denso A/C compressors were gradually introduced for vehicles with 6-cylinder engines.*
- *Beginning the production year 2006, the name of the Zexel A/C compressor was changed from Zexel to Valeo.*
- *Replacement restrictors with different holes (not colored, yellow colored, red colored) are available. If a vehicle is equipped with a different restrictor, add more or less refrigerant depending on type (⇒ table). After charging, amend capacity stated on label or affix label indicating new capacity.*
- *Depending on manufacturer, color of red restrictor may tend more towards orange.*
- *As of November 1998, Audi A4 models have also been equipped with AWG condensers (initially approximately 10,000 vehicles, from vehicle identification number (VIN) 8DXA 065 253 to 8DXA 077 026). The specified capacity for vehicles with these condensers differs from those with Showa condensers. The condensers can be identified on the basis of certain characteristic features. Refer to* *⇒ page 103* *.*
- *If the condenser installed is replaced by one with a different part number, check the capacity indicated on the label in the vehicle and amend if necessary or affix a label with the correct capacity over the existing one. Refer to ⇒ Heating, Ventilation and Air Conditioning; Rep. Gr. 87 ; Description and Operation and Electronic Parts Catalog (ETKA).*

Protected by copyright. Copying for private or commercial purposes, in part or in whole, is not permitted unless authorised by AUDI AG. AUDI AG does not guarantee or accept any liability with respect to the correctness of information in this document. Copyright by AUDI AG.

Distinguishing features between Showa and AWG condensers

Different manifolds:

A - Manifold on Showa condenser

B - Manifold on AWG condenser

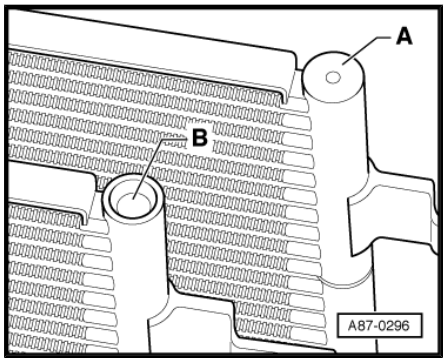

Downloaded from www.Manualslib.com manuals search engine

Different connections to pressure switch.

A - Connection area on Showa condenser

B - Connection area on AWG condenser

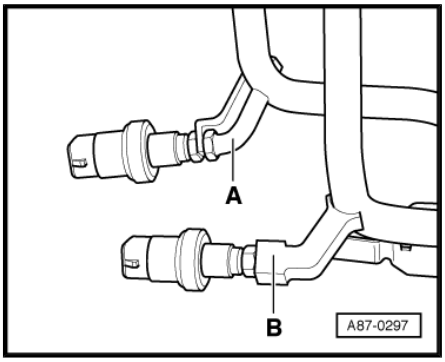

3.2.8 Capacities, A4 (8E_) 01 and Audi A4 Cabriolet (8H_), from MY 03

Note

Applies also to the Audi RS 4

Features of the refrigerant system:

- Restrictor (yellow or red colored).
- Reservoir
- Denso A/C compressor with A/C compressor regulator valve -N280- (without A/C clutch)

Vehicle model	Production period	Capacity in grams	Differing features of this refrigerant circuit
Audi A4	As of 11.00	500 + / - 20	• Restrictor yellow or red colored
Audi RS 4	As of 07.05	440 + / - 20	• Red colored restrictor

Protected by copyright. Copying for private or commercial purposes, in part or in whole, is not permitted unless authorised by AUDI AG. AUDI AG does not guarantee or accept any liability with respect to the correctness of information in this document. Copyright by AUDI AG.

Downloaded from www.Manualslib.com manuals search engine

Note

- *Replacement restrictors with different holes are available: yellow colored 1.54 mm, red colored 1.42 mm.*
- *Depending on manufacturer, color of red restrictor may tend more towards orange.*
- *To avoid altering the cooling output of the air conditioner, red or yellow colored restrictors must only be installed. Yellow colored restrictors were installed in model year 2001. Red colored restrictors were installed as of model year 2002. The restrictor modification (a red colored restrictor may also be installed in vehicles of model year 2001 instead of a yellow colored restrictor) does not alter the capacity for these vehicles.*
- *Depending on time period of production and depending on engine, different A/C compressors are installed (these A/C compressors do not have an A/C clutch)*
- *At the start production, Denso A/C compressors 6 SEU 12 and 7 SEU 16 were installed. As of model year 2004, there was a running change to other Denso compressor types (6 SEU 14 and 7 SEU 17). Refer to ⇒ Heating, Ventilation and Air Conditioning; Rep. Gr. 87 ; Description and Operation (vehicle-specific repair manual) and Electronic Parts Catalog (ETKA).*
- *The Audi RS 4 has an condenser with a smaller internal volume, therefore the capacity for this model is less than for other models. Refer to the Electronic Parts Catalog.*

Protected by copyright. Copying or distribution of this document is not permitted unless authorised by AUDI AG. AUDI AG does not guarantee or accept any liability with respect to the accuracy of the information.

3.2.9 Capacities, Audi A4 (8K_) from MY 2008, Audi A5 Coupe (8T_) from MY 2008, Audi Q5 (8R_) from MY 2008 and Audi A5 Cabriolet (8F_) from MY 2009

Note

Applies also to the Audi S5 and the Audi RS 5.

Features of the refrigerant system:

- Expansion Valve
- Fluid Reservoir
- Refrigerant pipe with inner heat exchanger
- Denso A/C compressors with an A/C compressor regulator valve -N280- , refer to Refer to ⇒ Heating, Ventilation and Air Conditioning; Rep. Gr. 87 ; Description and Operation (vehicle-specific repair manual) and Electronic Parts Catalog (ETKA).

Vehicle model	Production period	Capacity in grams	Differing features of this refrigerant circuit
Audi A4	As of 10.07	600 + / - 20	• None
Audi A5 Coupe and Sportback	As of 05.07	600 + / - 20	• None
Audi Q5	As of 09.08	600 + / - 20	• None

Downloaded from www.Manualslib.com manuals search engine

Vehicle model	Production period	Capacity in grams	Differing features of this refrigerant circuit
Audi A5 Cabriolet	As of 03.09	600 + / - 20	• None
Audi RS 5	As of 03.10	570 + / - 20	• None

Note

- *At start of production, A/C compressors manufactured by Denso (type 6 SEU 14) on 4 and 6 cylinder vehicles Engine and type 7 SEU 17 on vehicles with 8 cylinders engine) installed. Compressors from other manufacturers may also be installed at a later time. Refer to ⇒ Heating, Ventilation and Air Conditioning; Rep. Gr. 87 ; Description and Operation (vehicle-specific repair manual) and Electronic Parts Catalog (ETKA).*
- *The Audi RS 5 has an condenser with a smaller internal volume, therefore the capacity for this model is less than for other models of this series. Refer to the Electronic Parts Catalog.*

Protected by copyright. Copying for private or commercial purposes, in part or in whole, is not permitted unless authorised by AUDI AG. AUDI AG does not guarantee or accept any liability with respect to the correctness of information in this document. Copyright by AUDI AG.

3.2.10 Capacities, Audi 100 and Audi A6 (4A_), from MY 98

Features of the refrigerant system:

- Restrictor (not colored)
- Reservoir
- A/C compressor manufactured by Denso or Zexel / Valeo, Refer to ⇒ Heating, Ventilation and Air Conditioning; Rep. Gr. 87 ; Description and Operation and Electronic Parts Catalog (ETKA).

Vehicle model	Production period	Capacity in grams	Differing features of this refrigerant circuit
Audi 100/Audi A6	From 10.92 to 03.97	750 + 50	• None

Downloaded from www.Manualslib.com manuals search engine

Note

- *If a vehicle is equipped with a yellow colored restrictor as replacement for a non-colored restrictor, add 50 g more refrigerant than specified in the table. In addition, the capacity specified on the label in the vehicle is to be checked and amended if necessary, or the existing label is to be replaced with one indicating the correct capacity (affix over old label).*
- *Restrictors with a modified hole have been installed at the factory since November 1997 (colored). In order to distinguish between the two restrictor versions, the one with the smaller hole (1.54 mm) is yellow colored. The restrictor with the larger hole (1.83 mm) is not colored.*
- *As of calendar year 2006, the Zexel / Valeo identification was changed to Valeo.*
- *From September 1994, production was gradually switched from condenser 4A0 260 403 AB to condenser 4A0 260 403 AC.*
- *The refrigerant capacity of 750+50 g applies to all Audi 100 (regardless of condenser).*
- *Only condensers with part number 4A0 260 403 AC are now available as replacement parts (if necessary, make use of label , part no. 8A0 010 126 P).*
- *After charging refrigerant circuit of vehicles manufactured up to October 1994, check capacity stated on label in vehicle and amend if necessary of affix label, part no. 8A0 010 126 P (modified capacity). Refer to ⇒ Heating, Ventilation and Air Conditioning; Rep. Gr. 87 ; Description and Operation and Electronic Parts Catalog (ETKA).*

3.2.11 Capacities, Audi A6 (4B_) from MY 1998 and Audi allroad (4B_) from MY 2005

Features of the refrigerant system:

- Restrictor
- Reservoir
- A/C compressor manufactured by Denso or Zexel / Valeo, Refer to ⇒ Heating, Ventilation and Air Conditioning; Rep. Gr. 87 ; Description and Operation and Electronic Parts Catalog (ETKA).

Vehicle model	Production period	Capacity in grams	Differing features of this refrigerant circuit
Audi A6	From 04.97 to 11.97	800 + 50	• Restrictor (not colored) • Air conditioner version 1, refer to ⇒ Heating, Ventilation and Air Conditioning; Rep. Gr. 87 ; Diagnosis and Testing (vehicle-specific repair manual) • Condenser with flat pipe dimensions 20 mm x 3 mm ⇒ page 111

Protected by copyright. Copying for private or commercial purposes, in part or in whole, is not permitted unless authorised by AUDI AG. AUDI AG does not guarantee or accept any liability with respect to the correctness of information in this document. Copyright by AUDI AG.

Downloaded from www.Manualslib.com manuals search engine

Vehicle model	Production period	Capacity in grams	Differing features of this refrigerant circuit
	From 11.97 to 08.98	850 + 50	• Restrictor colored (yellow) • Air conditioner version 1, refer to ⇒ Heating, Ventilation and Air Conditioning; Rep. Gr. 87 ; Diagnosis and Testing (vehicle-specific repair manual) • Condenser with flat pipe dimensions 20 mm x 3 mm ⇒ page 111

Note

- *Restrictors with a modified hole have been installed at the factory since November 1997 (yellow colored). The capacity was increased by 50 g for vehicles in which a yellow colored restrictor was installed.*
- *In order to distinguish between the two restrictor versions, the one with the smaller hole (1.54 mm) is yellow colored. The restrictor with the larger hole (1.83 mm) is not colored.*
- *If a vehicle is equipped with a colored restrictor as replacement for a non-colored restrictor, add 50 g more refrigerant than specified in the table. In addition, the capacity specified on the label in the vehicle is to be checked and amended if necessary, or the existing label is to be replaced with one indicating the correct capacity (affix over old label).*
- *The Audi A6 are equipped with different A/C compressors depending on engine and production period.*
- *Production was gradually switched in August/September 1998 from air conditioner unit version 1 to air conditioner unit version 2. A reduction in capacity was achieved as the evaporator was also modified together with the air conditioner unit.*
- *The two air conditioner unit versions can be identified on the basis of certain characteristics described in the vehicle-specific repair manual. Refer to ⇒ Heating, Ventilation and Air Conditioning; Rep. Gr. 87 ; Description and Operation and Electronic Parts Catalog (ETKA).*
- *Beginning the production year 2006, the name of the Zexel A/C compressor was changed from Zexel to Valeo.*

Vehicle model	Production period	Capacity in grams	Differing features of this refrigerant circuit
Audi A6 • With 4-cylinder engine • With 6-cylinder gasoline engine	From 08.98 to 04.99	750 + 50	• Restrictor colored (yellow) • Air conditioner version 2, refer to ⇒ Heating, Ventilation and Air Conditioning; Rep. Gr. 87 ; Description and Operation (vehicle-specific repair manual). • Condenser with part no. 4B0 260 401 (403) and index D, E or F (flat pipe dimensions 20 mm x 3 mm ⇒ page 111). Refer to Electronic Parts Catalog (ETKA).

Downloaded from www.Manualslib.com manuals search engine

Vehicle model	Production period	Capacity in grams	Differing features of this refrigerant circuit
Audi A6 • With 6-cylinder diesel engine	♦ From 08.98 to 10.98 ♦ From 12.98 to 10.99 (see notes)	750 + 50	• Restrictor colored (yellow) • Air conditioner version 2, refer to ⇒ Heating, Ventilation and Air Conditioning; Rep. Gr. 87 ; Description and Operation (vehicle-specific repair manual) • Condenser with part no. 4B0 260 401 (403) and index D, E or F (flat pipe dimensions 20 mm x 3 mm ⇒ page 111). Refer to Electronic Parts Catalog (ETKA).

Vehicle model	Production period	Capacity in grams	Differing features of this refrigerant circuit
Audi A6/ Audi allroad • With 6-cylinder diesel engine	♦ From 10.98 to 12.98 ♦ From 10.99 (see notes)	550 + 50	• Restrictor colored (yellow) • Air conditioner version 2, refer to ⇒ Heating, Ventilation and Air Conditioning; Rep. Gr. 87 ; Description and Operation (vehicle-specific repair manual) • Condenser with part no. 4B0 260 401 (403) and index G or R (flat pipe dimensions 16 mm x 1.7 mm ⇒ page 111) and refer to Electronic Parts Catalog (ETKA).
Audi A6/ Audi allroad • With 4-cylinder engine except 2.0 l • With 6-cylinder gasoline engine except 3.0 l engine • With 6 cylinder diesel engine (see notes)	From 04.99	650 + 50	• Restrictor colored (yellow) • Air conditioner version 2, refer to ⇒ Heating, Ventilation and Air Conditioning; Rep. Gr. 87 ; Description and Operation (vehicle-specific repair manual) • Condenser with part no. 4B0 260 401 (403) and index H, J, K, S, T or N (flat pipe dimensions 18 mm x 1.7 mm ⇒ page 111). Refer to Electronic Parts Catalog (ETKA).
Audi A6 • With 4-cylinder engine 2.0 l • With 6-cylinder engine 3,0 l	As of 05.01	550 + 50	• Restrictor colored (yellow) • Air conditioner version 3, refer to ⇒ Heating, Ventilation and Air Conditioning; Rep. Gr. 87 ; Description and Operation (vehicle-specific repair manual) • Condenser with part no. 8E0 260 401 (403) and index A (flat pipe dimensions 18 mm x 1.7 mm ⇒ page 111) and ⇒ Electronic Parts Catalog • A/C Compressor Regulator Valve - N280-

Protected by copyright. Copying for private or commercial purposes, in part or in whole, is not permitted unless authorised by AUDI AG. AUDI AG does not guarantee or assume any liability with respect to the correctness of information in this document. Copyright by AUDI AG.

Downloaded from www.Manualslib.com manuals search engine

Note

- *Condensers with A/C pressure switch -F129- or High Pressure Sensor -G65- are supplied for production as part number XXXXXX 401 X. As a replacement part, this condenser is supplied without A/C pressure switch -F129- or high pressure sensor -G65- as part number XXXXXX 403 X.*
- *From 10.98 to 12.98, vehicles with 6-cyinder. diesel engine (initially about 10,000) were equipped with condensers of a different design. The capacity is different for vehicles with these condensers. The condensers can be identified on the basis of certain characteristics and the part number, refer to ⇒ page 111 .*
- *The Audi A6 are equipped with different A/C compressors depending on engine and production period.*
- *On condenser replacement, observe part number index (different flat pipe versions, flat pipe dimensions 16 x 1.7 mm, 18 mm x 1.7 mm or 20 mm x 3 mm) and the different capacities involved. If a condenser with a different part number index is installed, the capacity specified on the label must be checked and amended if necessary or a label indicating the modified capacity must be affixed over the existing label. The part number can be found on a sticker affixed on the underside of the condenser.*
- *As of 04.99, production was gradually switched from condensers with flat pipe dimensions 20 mm x 3 mm to condensers with flat pipe dimensions 18 mm x 1.7 mm or 16 mm x 1.7 mm. The change in production took place gradually during the course of 1999 depending on the engine and existing supplies of the different versions. Refer to Electronic Parts Catalog for precise assignment of the different condensers. Refer to Electronic Parts Catalog.*
- *For vehicles as of 04.99 equipped with 6-cylinder diesel engine, a condenser with index D, G, R or K may be installed. Pay attention to the different capacities. Refer to ⇒ Heating, Ventilation and Air Conditioning; Rep. Gr. 87 ; Description and Operation and Electronic Parts Catalog (ETKA).*

Protected by copyright. Copying for private or commercial purposes, in part or in whole, is not permitted unless authorised by AUDI AG. AUDI AG does not make any representations or warranties or accept any liability whatsoever in respect of the contents of this document, or any part thereof. Other rights are reserved by AUDI AG.

Vehicle model	Production period	Capacity in grams	Differing features of this refrigerant circuit
Audi A6 • With 8-cylinder engine	• Up to 03.99 and • from 02.00	550 + 50	• Restrictor colored (yellow) • Air conditioner version 2, refer to ⇒ Heating, Ventilation and Air Conditioning; Rep. Gr. 87 ; Description and Operation (vehicle-specific repair manual) • Condenser with part no. 4B3 260 401 (403) B, D, E (flat pipe dimensions 18 mm x 1.7 mm ⇒ page 111). Refer to Electronic Parts Catalog (ETKA).

Downloaded from www.Manualslib.com manuals search engine

Vehicle model	Production period	Capacity in grams	Differing features of this refrigerant circuit
Audi A6 • With 8-cylinder engine	From 03.99 to 02.00	650 + 50	• Restrictor colored (yellow) • Air conditioner version 2, refer to⇒ Heating, Ventilation and Air Conditioning; Rep. Gr. 87 ; Description and Operation (vehicle-specific repair manual) • Condenser with part no. 4B3 260 401 (403) C (flat pipe dimensions 18 mm x 1.7 mm ⇒ page 111). Refer to Electronic Parts Catalog (ETKA).

Protected by copyright. Copying for private or commercial purposes, in part or in whole, is not permitted unless authorised by AUDI AG. AUDI AG does not guarantee or accept any liability with respect to the correctness of information in this document. Copyright by AUDI AG.

Note

- *The 8-cylinder Audi A6 has a Denso A/C compressor.*
- *Production was gradually switched in August/September 1998 from air conditioner unit version 1 to air conditioner unit version 2. Vehicles with 8-cylinder engine are only equipped with air conditioner unit as of version 2.*
- *The different air conditioner unit versions can be identified on the basis of certain characteristics described in the repair manual. Refer to ⇒ Heating, Ventilation and Air Conditioning; Rep. Gr. 87 ; Description and Operation (vehicle-specific repair manual).*
- *For vehicles with 8-cylinder engines, different condensers were installed. Exclusive use was made for USA vehicles of condensers with part no. 4B3 260 401 (403) C, D, E.*
- *In March 1999, production was gradually switched from condensers with part no. 4B3 260 401 (403) B to condensers with part no. 4B3 260 401 (403) C.*
- *If the condenser installed is replaced by a condenser with a different part number, the capacity specified on the label must be amended and, if necessary, the label indicating the modified capacity must be affixed over the existing label. The part number can be found on a sticker attached to the bottom of the condenser. Refer to ⇒ Heating, Ventilation and Air Conditioning; Rep. Gr. 87 ; Description and Operation and Electronic Parts Catalog (ETKA).*

Determining Dimensions Of Flat Pipes From Condenser

Note

- *Production was gradually switched as of calendar week 45, 1998 (initially for Audi A6 with 6-cylinder diesel engine) to a condenser with smaller flat pipes.*
- *Observe part number on condenser replacement (sometimes the only distinguishing feature). Refer to the Electronic Parts Catalog.*

Downloaded from www.Manualslib.com manuals search engine

Condensers -A- with flat pipe dimensions -B- = 20 mm and -C- = 3.0 mm must be filled with more refrigerant than condensers -D- with flat pipe dimensions -E- = 18 mm or 16 mm and -F- = 1.7 mm. Refer to the Electronic Parts Catalog.

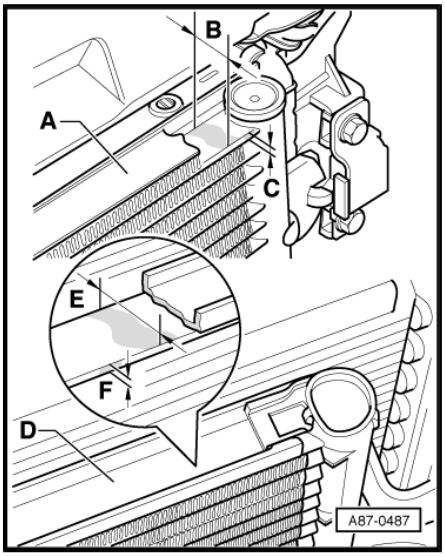

If condenser is replaced, observe flat pipe dimensions. If a condenser with different dimensions is installed, the sticker -A- specifying the capacity for refrigerant R134a is also to be replaced, or the old capacity specification is to be removed and the new capacity is to be noted, for example, using a waterproof marker. Refer to Electronic Parts Catalog (ETKA).

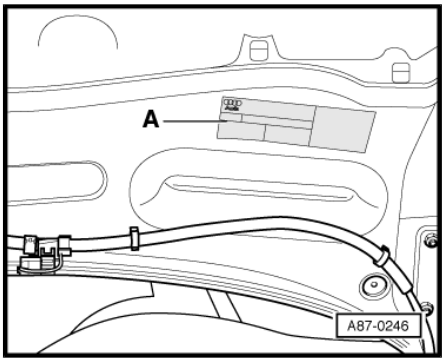

3.2.12 Capacities, Audi A6 (4F_), from MY 05

Note

Applies also to the Audi S6 and the Audi RS 6.

Features of the refrigerant system:

- Red colored restrictor.
- Reservoir
- Denso A/C compressor with A/C compressor regulator valve -N280- (without A/C clutch)

Vehicle model	Production period	Capacity in grams	Differing features of this refrigerant circuit
Audi A6 / S6	As of 04.04	530 + / - 20	• Red colored restrictor
Audi RS 6	As of 05.08	500 + / - 20	• Red colored restrictor • Condenser with a smaller internal capacity

Protected by copyright. Copying for private or commercial purposes, in part or in whole, is not permitted unless authorised by AUDI AG. AUDI AG does not guarantee or accept any liability with respect to the correctness of information in this document. Copyright by AUDI AG.

Downloaded from www.Manualslib.com manuals search engine

Note

- *Replacement restrictors with different holes are available: yellow colored 1.54 mm, red colored 1.42 mm.*
- *Depending on manufacturer, color of red restrictor may tend more towards orange.*
- *To avoid altering the cooling output of the air conditioner, red colored restrictors must only be installed.*
- *Different A/C compressors are installed depending on their version. Refer to ⇒ Heating, Ventilation and Air Conditioning; Rep. Gr. 87 ; Description and Operation and Electronic Parts Catalog (ETKA).*
- *In contrast to vehicles with other engines, vehicles with the 10-cylinder TFSI engine (Audi R S6) have a condenser with a smaller interior volume installed. For this reason, the refrigerant fill volume is slightly less in a 10-cylinder TFSI engine than in other engines. Refer to Electronic Parts Catalog (ETKA).*

3.2.13 Capacities, Audi A6 (4G_) from MY 11 and Audi A7 (4G_) from MY 11

Features of the refrigerant system:

- Expansion Valve
- Fluid Reservoir
- Refrigerant pipe with inner heat exchanger
- Denso A/C compressors with an A/C compressor regulator valve -N280- . Refer to ⇒ Heating, Ventilation and Air Conditioning; Rep. Gr. 87 ; Description and Operation and Electronic Parts Catalog (ETKA).

Vehicle model	Production period	Capacity in grams	Differing features of this refrigerant circuit
Audi A6	As of 02.11	570^{+} / - 20	• None
Audi A7	As of 10.10	570^{+} / - 20	• None

Protected by copyright. Copying for private or commercial purposes, in part or in whole, is not permitted unless authorised by AUDI AG. AUDI AG does not guarantee or accept any liability with respect to the correctness of information in this document. Copyright by AUDI AG.

Note

At the start of production, the A/C compressors manufactured by Denso (type 6 SEU 14) were installed. A/C compressors from other manufacturers or another type may also be installed at a later time. Refer to the Electronic Parts Catalog and⇒ Heating, Ventilation and Air Conditioning; Rep. Gr. 87 ; Description and Operation (vehicle-specific repair manual).

3.2.14 Capacities, Audi V8 (4C_) from MY 94

Features of the refrigerant system:

- Restrictor (not colored).
- Reservoir
- A/C compressors made by Zexel / Valeo. Refer to ⇒ Heating, Ventilation and Air Conditioning; Rep. Gr. 87 ; Description and Operation and Electronic Parts Catalog (ETKA).

Downloaded from www.Manualslib.com manuals search engine

Vehicle model	Production period	Capacity in grams	Differing features of this refrigerant circuit
Audi V8	From 10.92 to 10.93	850 + 50	• None

Note

- *Replacement restrictors with different holes are available. If these vehicles are equipped with a yellow colored restrictor, add 50 g more refrigerant than specified in the table. After charging, amend capacity stated on label or affix label indicating new capacity.*
- *In order to distinguish between the different restrictor versions, the restrictors with a smaller hole are colored (yellow or red). The red colored restrictor is not to be installed into these vehicles.*
- *Depending on manufacturer, color of red restrictor may tend more towards orange.*
- *Beginning the production year 2006, the name of the Zexel A/C compressor was changed from Zexel to Valeo.*

Protected by copyright. Copying for private or commercial purposes, in part or in whole, is not permitted unless authorised by AUDI AG. AUDI AG does not guarantee or accept any liability with respect to the correctness of information in this document. Copyright by AUDI AG.

3.2.15 Capacities, Audi A8 (4D_) from MY 94

Features of the refrigerant system:

- Restrictor
- Reservoir
- A/C compressor manufactured by Denso or Zexel / Valeo. Refer to ⇒ Heating, Ventilation and Air Conditioning; Rep. Gr. 87 ; Description and Operation and Electronic Parts Catalog (ETKA).

Vehicle model	Production period	Capacity in grams	Differing features of this refrigerant circuit
Audi A8	From 5.94 to 11.97	750 + 50	• Restrictor (not colored)
	As of 11.97	800 + 50	• Restrictor colored (yellow)

Downloaded from www.Manualslib.com manuals search engine

Note

- *Restrictors with a modified hole have been installed at the factory since November 1997 (yellow colored). The capacity was increased by 50 g for vehicles with a yellow colored restrictor.*
- *In order to distinguish between the different restrictor versions, the restrictors with a smaller hole are yellow (1.54 mm) or red (1.42 mm) colored. The restrictor with the larger hole (1.83 mm) is not colored.*
- *If a vehicle is equipped with a yellow colored restrictor as replacement for a non-colored restrictor, add 50 g more refrigerant than specified in the table. In addition, the capacity specified on the label in the vehicle is to be checked and amended if necessary, or the existing label is to be replaced with one indicating the correct capacity (affix over old label). The red colored restrictor is not to be installed into these vehicles.*
- *Exclusive use was made at the start of production of Zexel / Valeo A/C compressors. As of model year 1996, production was gradually switched to Denso compressors. Refer to ⇒ Heating, Ventilation and Air Conditioning; Rep. Gr. 87 ; Description and Operation and Electronic Parts Catalog (ETKA).*
- *Beginning the production year 2006, the name of the Zexel A/C compressor was changed from Zexel to Valeo.*

Protected by copyright. Copying for private or commercial purposes, in part or in whole, is not permitted unless authorised by AUDI AG. AUDI AG does not guarantee or accept any liability with respect to the correctness of information in this document. Copyright by AUDI AG.

3.2.16 Capacities, Audi A8 (4E_) from MY 03

Features of the refrigerant system:

- Red colored restrictor.
- Reservoir
- Denso A/C compressor with A/C compressor regulator valve -N280- (without A/C clutch)

Vehicle model	Production period	Capacity in grams	Differing features of this refrigerant circuit
Audi A8	As of 10.02	620 + / - 20	• Red colored restrictor

Note

- *Replacement restrictors with different holes are available: yellow colored 1.54 mm, red colored 1.42 mm.*
- *Depending on manufacturer, color of red restrictor may tend more towards orange.*
- *To avoid altering the cooling output of the air conditioner, red colored restrictors must only be installed.*
- *Different A/C compressors are installed depending on their version. Refer to ⇒ Heating, Ventilation and Air Conditioning; Rep. Gr. 87 ; Description and Operation and Electronic Parts Catalog (ETKA).*

3.2.17 Capacities, Audi A8 (4H_) from MY 10

Features of the refrigerant system:

Downloaded from www.Manualslib.com manuals search engine

- Expansion Valve
- Depending on the vehicle equipment level with one or two evaporators
- Refrigerant pipe with inner heat exchanger
- Dryer cartridge in fluid reservoir on condenser
- Denso A/C compressors with an A/C compressor regulator valve -N280- . Refer to ⇒ Heating, Ventilation and Air Conditioning; Rep. Gr. 87 ; Description and Operation and Electronic Parts Catalog (ETKA).

Protected by copyright. Copying for private or commercial purposes, in part or in whole, is not permitted unless authorised by AUDI AG. AUDI AG does not guarantee or accept any liability with respect to the correctness of information in this document. Copyright by AUDI AG.

Vehicle model	Production period	Capacity in grams	Differing features of this refrigerant circuit
Audi A8	As of 03.10		
♦ Vehicle with one evaporator		780 + / - 20	• one evaporator
♦ Vehicle with two evaporators		930 + / - 20	• two evaporators

3.2.18 Capacities, Audi Q7 (4L_), from MY 06

Features of the refrigerant system:

- Expansion Valve
- Depending on the vehicle equipment level with one or two evaporators
- Dryer cartridge in fluid reservoir on condenser
- Denso A/C compressors with an A/C compressor regulator valve -N280- . Refer to ⇒ Heating, Ventilation and Air Conditioning; Rep. Gr. 87 ; Description and Operation and Electronic Parts Catalog (ETKA).

Vehicle model	Production period	Capacity in grams	Differing features of this refrigerant circuit
Audi Q7	As of 02.06		
♦ Vehicle with one evaporator		700 + 50	• one evaporator
♦ Vehicle with two evaporators		1050 + 50	• two evaporators

3.2.19 Capacities, Audi R8 (42_) from MY 08

Features of the refrigerant system:

- Red colored restrictor.
- Reservoir
- Two condensers switched in sequence
- Denso A/C compressors with an A/C compressor regulator valve -N280- . Refer to ⇒ Heating, Ventilation and Air Condi-

Downloaded from www.Manualslib.com manuals search engine

tioning; Rep. Gr. 87 ; Description and Operation and Electronic Parts Catalog (ETKA).

Vehicle model	Production period	Capacity in grams	Differing features of this refrigerant circuit
Audi R8	As of 03.07	650 + / - 20	• Red colored restrictor

Note

- *Replacement restrictors with different holes are available: yellow colored 1.54 mm, red colored 1.42 mm.*
- *Depending on manufacturer, color of red restrictor may tend more towards orange.*
- *To avoid altering the cooling output of the air conditioner, red colored restrictors must only be installed.*

3.3 Refrigerant Oils

Note

- *As PAG (polyalkylene glycol) oil is highly hygroscopic (attracts water), opened containers are to be immediately resealed so as to be air-tight.*
- *PAG oil from containers which have been open for a lengthy period is no longer usable.*

Protected by copyright. Copying for private or commercial purposes, in part or in whole, is not permitted unless authorised by AUDI AG. AUDI AG does not guarantee or accept any liability with respect to the correctness of information in this document. Copyright by AUDI AG.

Downloaded from www.Manualslib.com manuals search engine

Note

- *The oils used with refrigerant R12 are not suitable for refrigerant R134a.*
- *The name of the compressor manufacturer Nippondenso has been changed to Denso.*
- *The special refrigerant oil (for use with refrigerant circuits R134a only) is no longer commercially available.*
- *Refrigerant oils specifically designed for each compressor can therefore be obtained from the replacement parts program. Refer to Electronic Parts Catalog (ETKA).*
- *The use of other refrigerant oils could cause system failure, as they do not always mix and thus circulate with refrigerant R134a (for compressor lubrication).*
- *The Zexel / Valeo, Denso, Delphi and Sanden A/C compressors all have different refrigerant oils. Refer to Electronic Parts Catalog (ETKA).*
- *Beginning the production year 2006, the name of the Zexel A/C compressor was changed from Zexel to Valeo.*
- *The refrigerant oil (G 052 300 A2) for use in refrigerant circuits with Denso compressors (old name Nippondenso) is also included in the retrofit kit (part number 4A0 298 107 A). Refer to Electronic Parts Catalog (ETKA).*
- *For refrigerant circuits with Zexel or Sanden compressors use is to be made of refrigerant oil with part number G 052 154 A2. Refer to Electronic Parts Catalog (ETKA).*
- *Refrigerant oils G 052 154 A2 and G 052 300 A2 can be used in a Delphi A/C compressor. Refer to the Electronic Parts Catalog (ETKA).*
- *For refrigerant circuits with Zexel / Valeo compressor, use can be made of both the refrigerant oil (G 052 154 A2) and the refrigerant oil (G 052 200 A2) contained in the retrofit kit (part number 4A0 298 107). Refer to Electronic Parts Catalog (ETKA).*

Protected by copyright. Copying for private or commercial purposes, in part or in whole, is not permitted unless authorised by AUDI AG. AUDI AG does not guarantee or accept any liability with respect to the correctness of information in this document. Copyright by AUDI AG.

Downloaded from www.Manualslib.com manuals search engine

Note

- *The allocation for the Zexel / Valeo, Sanden or Denso) A/C compressors can be found in the vehicle-specific repair manual. Refer to ⇒ Heating, Ventilation and Air Conditioning; Rep. Gr. 87 ; Removal and Installation (vehicle-specific repair manual) and to the Electronic Parts Catalog (ETKA).*
- *Beginning the production year 2006, the name of the Zexel A/C compressor was changed from Zexel to Valeo.*
- *With Zexel, Denso and Sanden compressors, the amount of refrigerant oil in the replacement compressor corresponds to the total quantity of oil to be added. On A/C compressor replacement, the quantity of refrigerant oil in the A/C compressor to be installed must therefore be adjusted (an incorrect refrigerant oil quantity will damage the A/C compressor).*
- *When pouring refrigerant oil out of replacement A/C compressor (or malfunctioning A/C compressor), a small quantity of oil generally remains in the A/C compressor (20 to 30 cm^3). This amount of refrigerant oil does not affect the function of the air conditioner and can therefore be ignored (always remains in A/C compressor).*
- *Following initial switch-on, the refrigerant oil is distributed throughout the entire refrigerant circuit.*
- *The specified capacities for the refrigerant oil apply if no other different specifications given for the S and RS.*
- *Refrigerant oil capacities when replacing refrigerant circuit components refer to ⇒ "5 Removal and Installation", page 191 and ⇒ Heating, Ventilation and Air Conditioning; Rep. Gr. 87 ; Removal and Installation , (vehicle-specific repair manual) and Electronic Parts Catalog (ETKA).*

This document is copyright. Copying for private or commercial purposes, in part or in whole, is not permitted unless authorised by AUDI AG. AUDI AG does not guarantee or accept any liability with respect to the correctness of information in this document. Copyright by AUDI AG.

3.4 Refrigerant Oil Capacities

- ⇒ "3.4.1 Capacities, Audi A1 (8X_) from MY 11", page 120
- ⇒ "3.4.2 Capacities, Audi A2 (8Z_) from MY 01", page 121
- ⇒ "3.4.3 Capacities, Audi A3 (8L_) 1997 through MY 2004 and Audi TT (8N_), from MY 1999", page 122
- ⇒ "3.4.4 Capacities, Audi A3 (8P_) from MY 04", page 123
- ⇒ "3.4.5 Capacities, Audi TT (8J_) from MY 07", page 124
- ⇒ "3.4.6 Capacities, Audi 80 (8A_/8C_), Audi Coupe (8B_) and Audi Cabriolet (8G_), from MY 2002", page 125
- ⇒ "3.4.7 Capacities, Audi A4 (8D_), from MY 95", page 126
- ⇒ "3.4.8 Capacities, A4 (8E_) 01 and Audi A4 Cabriolet (8H_), from MY 03", page 126
- ⇒ "3.4.9 Capacities, Audi A4 (8K_) from MY 2008, Audi A5 Coupe (8T_) from MY 2008, Audi Q5 (8R_) from MY 2008 and Audi A5 Cabriolet (8F_) from MY 2009", page 128
- ⇒ "3.4.10 Capacities, Audi 100 and Audi A6 (4A_), from MY 98", page 129
- ⇒ "3.4.11 Capacities, Audi A6 (4B_) 98 and Audi allroad from MY 05", page 130
- ⇒ "3.4.12 Capacities, Audi A6 (4F_), from MY 05", page 132

Downloaded from www.Manualslib.com manuals search engine

- ⇒ “3.4.13 Capacities, Audi A6 (4G_) from MY 11 and Audi A7 (4G_) from MY 11“, page 133
- ⇒ “3.4.14 Capacities, Audi V8 (4C_) from MY 94“, page 134
- ⇒ “3.4.15 Capacities, Audi A8 (4D_) from MY 94“, page 135
- ⇒ “3.4.16 Capacities, Audi A8 (4E_) from MY 03“, page 135
- ⇒ “3.4.17 Capacities, Audi A8 (4H_) from MY 10“, page 136
- ⇒ “3.4.18 Capacities, Audi Q7 (4L_), from MY 06“, page 138
- ⇒ “3.4.19 Capacities, Audi R8 (42_) from MY 08“, page 139

3.4.1 Capacities, Audi A1 (8X_) from MY 11

Features of the refrigerant system:

- Expansion Valve
- Fluid Reservoir
- Compressors from various manufacturers with an A/C compressor regulator valve -N280- (without an A/C clutch). Refer to ⇒ Heating, Ventilation and Air Conditioning; Rep. Gr. 87 ; Description and Operation and Electronic Parts Catalog (ET-KA).

Vehicle model	Production period	Total quantity of oil in refrigerant circuit in cm^3	Quantity of refrigerant oil in replacement compressor in cm^3	Differing features of this refrigerant circuit
Audi A1	As of 08.10	110 + / - 10	110 + / - 10	• Sanden (or Delphi) A/C compressors
		90 + / - 10	90 + / - 10	Denso A/C compressor

Protected by copyright. Copying for private or commercial purposes, in part or in whole, is not permitted unless authorised by AUDI AG. AUDI AG does not guarantee or accept any liability with respect to the correctness of information in this document. Copyright by AUDI AG.

Downloaded from www.Manualslib.com manuals search engine

Note

- *The replacement compressor contains the full quantity of oil intended for the refrigerant circuit. On A/C compressor replacement, the quantity of oil in the A/C compressor is therefore to be adjusted. Refer to* *⇒ "5 Removal and Installation", page 191* .
- *Different A/C compressors are installed depending on production period and engine.*
- *At Start Of Production, A/C compressors manufactured by Denso type 6 SEU 14C or Sanden type 7 PXE 16 were installed. Refer to Electronic Parts Catalog (ETKA) and ⇒ Heating, Ventilation and Air Conditioning; Rep. Gr. 87 ; Removal and Installation .*
- *Depending on the engine, an A/C compressor manufactured by Delphi type 6 CVC 140 will be installed at a later point in time (introduction still open). Refer to Electronic Parts Catalog (ETKA) and ⇒ Heating, Ventilation and Air Conditioning; Rep. Gr. 87 ; Removal and Installation .*
- *These A/C compressors are available as replacement parts with different oil fill capacities, therefore note capacity on the A/C compressor and the exact part number. Refer to the ⇒ Heating and Air Conditioning; Rep. Gr. 87 ; Specifications and Electronic Parts Catalog.*
- *The reason for the different oil capacities inside the A/C compressor is due to the design of the A/C compressor (with or with an oil separator on the high pressure connection) or to the design of the refrigerant circuit if the A/C compressors are have the identical design. Pay attention to the different capacities. Too much oil in the circuit leads to higher pressures and reduces cooling performance of the system. Too little oil may lead to lubrication problems in the compressor.*
- *A data plate may be attached to the A/C compressor by the manufacturer, indicating the part number and refrigerant oil quantity.*

Protected by copyright. Copying for private or commercial purposes, in part or in whole, is not permitted unless authorised by AUDI AG. AUDI AG does not guarantee or accept any liability with respect to the correctness of information in this document. Copyright by AUDI AG.

3.4.2 Capacities, Audi A2 (8Z_) from MY 01

Features of the refrigerant system:

- Restrictor
- Reservoir
- A/C compressor with A/C compressor regulator valve -N280- (without A/C clutch)
- A/C compressors made by Denso, refer to ⇒ Heating, Ventilation and Air Conditioning; Rep. Gr. 87 ; Description and Operation and to the Electronic Parts Catalog.

Vehicle model	Production period	Total quantity of oil in refrigerant circuit in cm^3	Quantity of refrigerant oil in replacement compressor in cm^3
Audi A2	As of 06.00	180 +/ -15	180+/-15

Downloaded from www.Manualslib.com manuals search engine

Note

- *The replacement compressor contains the full quantity of oil intended for the refrigerant circuit. On A/C compressor replacement, the quantity of oil in the A/C compressor is therefore to be adjusted. Refer to* *⇒ "5 Removal and Installation", page 191* .
- *As the A/C compressor and engine always operate at the same time and the entire quantity of refrigerant oil is contained in the A/C compressor, the circuit must be completely assembled before starting the engine. Refer to ⇒ Heating and Air Conditioning; Rep. Gr. 87 ; Removal and Installation .*
- *These A/C compressors are available as replacement parts with different oil fill capacities, therefore note capacity on the A/C compressor and the exact part number. Refer to Electronic Parts Catalog (ETKA).*

3.4.3 Capacities, Audi A3 (8L_) 1997 through MY 2004 and Audi TT (8N_), from MY 1999

Features of the refrigerant system:

- Expansion Valve
- Fluid Reservoir
- A/C compressor manufactured by Sanden or Zexel / Valeo. Refer to ⇒ Heating, Ventilation and Air Conditioning; Rep. Gr. 87 ; Description and Operation and Electronic Parts Catalog.

Vehicle model	Production period	Total quantity of oil in refrigerant circuit in cm^3	Quantity of refrigerant oil in replacement compressor in cm^3
Audi A3	As of 08.96	135^{+} / -15	135^{+}/-15
Audi TT	As of 10.98	135^{+} / -15	135^{+}/-15

Note

- *The replacement compressor contains the full quantity of oil intended for the refrigerant circuit. On A/C compressor replacement, the quantity of oil in the A/C compressor is therefore to be adjusted. Refer to* *⇒ "5 Removal and Installation", page 191* .
- *Exclusive use was made at the start of production of Sanden A/C compressors. As of model year 1999, use was also made of Zexel compressors. Refer to ⇒ Heating and Air Conditioning; Rep. Gr. 87 ; Description and Operation and Electronic Parts Catalog.*
- *Beginning the production year 2006, the name of the Zexel A/C compressor was changed from Zexel to Valeo.*

Protected by copyright. Copying for private or commercial purposes, in part or in whole, is not permitted unless authorised by AUDI AG. AUDI AG does not guarantee or accept any liability with respect to the correctness of information in this document. Copyright by AUDI AG.

Downloaded from www.Manualslib.com manuals search engine

3.4.4 Capacities, Audi A3 (8P_) from MY 04

Note

Applies to the Audi A3, Audi A3 Sportback, Audi RS3 and Audi A3 Cabriolet.

Features of the refrigerant system:

- Expansion Valve
- Fluid Reservoir
- Compressors from various manufacturers with an A/C compressor regulator valve -N280- (without an A/C clutch). Refer to ⇒ Heating, Ventilation and Air Conditioning; Rep. Gr. 87 ; Description and Operation and Electronic Parts Catalog.

Vehicle model	Production period	Total quantity of oil in refrigerant circuit in cm^3	Quantity of refrigerant oil in replacement compressor in cm^3	Differing features of this refrigerant circuit
Audi A3	From 05.03 to 10.03	180 + / - 10	180 + / - 10	• Denso A/C compressor 7 SEU 16
	As of 10.03	120 + / - 10	120 + / - 10	• Zexel A/C compressor
		110 + / - 10	110 + / - 10	• Sanden A/C compressor
		140 + / - 10	140 + / - 10	Denso A/C compressor 7 SEU 17
	As of 06.07	90 + / - 10	90 + / - 10	• Denso A/C compressor 6 SEU 14
	As of 08.07	110 + / - 10	110 + / - 10	• Delphi A/C compressor

Protected by copyright. Copying for private or commercial purposes, in part or in whole, is not permitted unless authorised by AUDI AG. AUDI AG does not guarantee or accept any liability with respect to the correctness of information in this document. Copyright by AUDI AG.

Downloaded from www.Manualslib.com manuals search engine

Note

- *The replacement compressor contains the full quantity of oil intended for the refrigerant circuit. On A/C compressor replacement, the quantity of oil in the A/C compressor is therefore to be adjusted. Refer to* *⇒ "5 Removal and Installation", page 191* .
- *Different A/C compressors are installed depending on production period and engine.*
- *At start of production, exclusive use was made of A/C compressors 7 SEU 16 from Denso (for example, A/C compressor with part no. 1K0 820 803 up to index D). In model year 2004 (as of approximately 10.03), a gradual change was made to a different type of Denso A/C compressor (7 SEU 17 for example, A/C compressor with part number 1K0 820 803 as of index E).*
- *Beginning the production year 2006, the name of the Zexel A/C compressor was changed from Zexel to Valeo.*
- *As of MY 2008, and depending on the engine, A/C compressors made by Denso (6 SEU 14) and Delphi are being installed. Refer to the Electronic Parts Catalog and ⇒ Heating and Air Conditioning; Rep. Gr. 87 ; Description and Operation .*
- *These A/C compressors are available as replacement parts with different oil fill capacities, therefore note capacity on the A/C compressor and the exact part number. Refer to the ⇒ Heating and Air Conditioning; Rep. Gr. 87 ; Removal and Installation and Electronic Parts Catalog.*
- *The reason for the different oil capacities inside the A/C compressor is due to the design of the A/C compressor (with or with an oil separator on the high pressure connection) or to the design of the refrigerant circuit if the A/C compressors are have the identical design. Pay attention to the different capacities. Too much oil in the circuit leads to higher pressures and reduces cooling performance of the system. Too little oil may lead to lubrication problems in the compressor.*
- *A data plate may be attached to the A/C compressor by the manufacturer, indicating the part number and refrigerant oil quantity.*
-

Protected by copyright. Copying for private or commercial purposes, in part or in whole, is not permitted unless authorised by AUDI AG. AUDI AG does not guarantee or accept any liability with respect to the correctness of information in this document. Copyright by AUDI AG.

3.4.5 Capacities, Audi TT (8J_) from MY 07

Features of the refrigerant system:

- Expansion Valve
- Fluid Reservoir
- Denso or Sanden A/C compressors, with an A/C compressor regulator valve -N280- (without an A/C clutch). Refer to ⇒ Heating, Ventilation and Air Conditioning; Rep. Gr. 87 ; Description and Operation and Electronic Parts Catalog.

Vehicle model	Production period	Total quantity of oil in refrigerant circuit in cm^3	Quantity of refrigerant oil in replacement compressor in cm^3	Differing features of this refrigerant circuit
Audi TT	As of 08.06	$90^{+}/_{-}10$	$90^{+}/_{-}10$	• Denso A/C compressor 6 SEU 14

Downloaded from www.Manualslib.com manuals search engine

Vehicle model	Production period	Total quantity of oil in refrigerant circuit in cm^3	Quantity of refrigerant oil in replacement compressor in cm^3	Differing features of this refrigerant circuit
		110 + / - 10	110 + / - 10	• Sanden A/C compressor

Note

- *The replacement A/C compressor contains the full quantity of oil intended for the refrigerant circuit. On A/C compressor replacement, the quantity of oil in the A/C compressor is therefore to be adjusted. Refer to* *⇒ "5 Removal and Installation", page 191* .
- *At the start of production, Denso A/C compressors 6 SEU 14 were installed; these A/C compressor do not have an A/C clutch (driven by the engine). Compressors from other manufacturers may also be installed at a later time, depending on the engine. Refer to the Electronic Parts Catalog and ⇒ Heating and Air Conditioning; Rep. Gr. 87 ; Description and Operation .*
- *As of MY 2008, on certain engines, Sanden A/C compressors (type PXE16) were installed; they do not have an A/C clutch (it is driven by the engine). Refer to the Electronic Parts Catalog and to ⇒ Heating and Air Conditioning; Rep. Gr. 87 ; Description and Operation .*
- *These A/C compressors are available as replacement parts with different oil fill capacities, therefore note capacity on the A/C compressor and the exact part number. Refer to the ⇒ Heating and Air Conditioning; Rep. Gr. 87 ; Removal and Installation and Electronic Parts Catalog.*
- *The reason for the different oil capacities inside the A/C compressor is due to the design of the A/C compressor (with or with an oil separator on the high pressure connection) or to the design of the refrigerant circuit if the A/C compressors are have the identical design. Pay attention to the different capacities. Too much oil in the circuit leads to higher pressures and reduces cooling performance of the system. Too little oil may lead to lubrication problems in the compressor.*
- *A data plate may be attached to the A/C compressor by the manufacturer, indicating the part number and refrigerant oil quantity.*

3.4.6 Capacities, Audi 80 (8A_/8C_), Audi Coupe (8B_) and Audi Cabriolet (8G_), from MY 2002

Features of the refrigerant system:

- Restrictor (not colored).
- Reservoir
- A/C compressors made by Zexel / Valeo, refer to ⇒ Heating, Ventilation and Air Conditioning; Rep. Gr. 87 ; Description and Operation and to the Electronic Parts Catalog.

Protected by copyright. Copying for private or commercial purposes, in part or in whole, is not permitted unless authorised by AUDI AG. AUDI AG does not guarantee or accept any liability with respect to the correctness of information in this document. Copyright by AUDI AG.

Downloaded from www.Manualslib.com manuals search engine

Vehicle model	Production period	Total quantity of oil in refrigerant circuit in cm^3	Quantity of refrigerant oil in replacement compressor in cm^3
Audi 80 Audi Coupe Audi Cabriolet	As of 10.92	250 + 50	250 + 50

Note

- *The replacement compressor contains the full quantity of oil intended for the refrigerant circuit. On A/C compressor replacement, the quantity of oil in the A/C compressor is therefore to be adjusted. Refer to*
  ⇒ "5 Removal and Installation", page 191 .
- *Beginning the production year 2006, the name of the Zexel A/C compressor was changed from Zexel to Valeo.*

3.4.7 Capacities, Audi A4 (8D_), from MY 95

Features of the refrigerant system:

- Restrictor
- Reservoir
- A/C compressor manufactured by Denso or Zexel / Valeo, refer to ⇒ Heating, Ventilation and Air Conditioning; Rep. Gr. 87 ; Description and Operation and to the Electronic Parts Catalog.

Vehicle model	Production period	Total quantity of oil in refrigerant circuit in cm^3	Quantity of refrigerant oil in replacement compressor in cm^3
Audi A4	As of 11.94	250 + 50	250 + 50

Note

- *The replacement compressor contains the full quantity of oil intended for the refrigerant circuit. On A/C compressor replacement, the quantity of oil in the A/C compressor is therefore to be adjusted. Refer to*
  ⇒ "5 Removal and Installation", page 191 .
- *The Audi A4 has different A/C compressors installed depending on the engine and the time of production. Refer to ⇒ Heating and Air Conditioning; Rep. Gr. 87 ; Description and Operation and to the Electronic Parts Catalog.*
- *Beginning the production year 2006, the name of the Zexel A/C compressor was changed from Zexel to Valeo.*

Protected by copyright. Copying for private or commercial purposes, in part or in whole, is not permitted unless authorised by AUDI AG. AUDI AG does not guarantee or accept any liability with respect to the correctness of information in this document. Copyright by AUDI AG.

3.4.8 Capacities, A4 (8E_) 01 and Audi A4 Cabriolet (8H_), from MY 03

Features of the refrigerant system:

- Restrictor
- Reservoir
- Denso A/C compressors with an A/C compressor regulator valve -N280- (without an A/C clutch, refer to ⇒ Heating, Ventilation and Air Conditioning; Rep. Gr. 87 ; Description and

Downloaded from www.Manualslib.com manuals search engine

Operation (vehicle-specific repair manual) and to the Electronic Parts Catalog.

Vehicle model	Production period	Total quantity of oil in refrigerant circuit in cm^3	Quantity of refrigerant oil in replacement compressor in cm^3	Differing features of this refrigerant circuit
Audi A4 Audi RS 4	From 11.00 to 01.04 • All	180 + / - 10	180 + / - 10	• A/C compressor type “6 SEU 12“ “6 SEU 14“ “7 SEU 16“ or “7 SEU 17“ (see notes below)
	As of 01.04 • all except 8-cylinder engine	120 + / - 10	120 + / - 10	• Compressor type “6 SEU 14“ or “7 SEU 17“(see notes below)
	As of 01.04 • Only 8-cylinder engine	130 + / - 10	130 + / - 10	• A/C compressor type “7 SEU 17“(see notes below)

Protected by copyright. Copying for private or commercial purposes, in part or in whole, is not permitted unless authorised by AUDI AG. AUDI AG does not guarantee or accept any liability with respect to the correctness of information in this document. Copyright by AUDI AG.

Note

- *The replacement compressor contains the full quantity of oil intended for the refrigerant circuit. On A/C compressor replacement, the quantity of oil in the A/C compressor is therefore to be adjusted. Refer to*
  ⇒ “5 Removal and Installation“, page 191 .
- *The Audi A4 is equipped with different A/C compressors depending on engine and production period. The replacement part for this A/C compressor has different oil capacities. Pay close attention to the exact part number. Refer to ⇒ Heating, Ventilation and Air Conditioning; Rep. Gr. 87 ; Description and Operation (vehicle-specific repair manual) and to the Electronic Parts Catalog.*
- *At start of production, the compressor types in the first line of the table were supplied with a refrigerant oil quantity of 180 cm^3. These compressors can be recognized from the index of the part number (8E0 260 805 with one index or with double index up to AH). In model year 2004 (as of approximately 01.04), a gradual change was made to other types of compressor with a refrigerant oil quantity of 120 cm^3 or 130 cm^3. These compressors can be recognized from the index of the part number 8E0 260 805 (with a double index as of AJ) or 4F0 260 805 (and the index E for vehicles with 8-cylinder engine). Refer to Electronic Parts Catalog (ETKA).*
- *The reason for the different oil capacities inside the A/C compressor is due to the design of the A/C compressor (with or with an oil separator on the high pressure connection) or to the design of the refrigerant circuit if the A/C compressors are have the identical design. Pay attention to the different capacities. Too much oil in the circuit leads to higher pressures and reduces cooling performance of the system. Too little oil may lead to lubrication problems in the compressor.*
- *A data plate may be attached to the A/C compressor by the manufacturer, indicating the part number and refrigerant oil quantity.*

Downloaded from www.Manualslib.com manuals search engine

3.4.9 Capacities, Audi A4 (8K_) from MY 2008, Audi A5 Coupe (8T_) from MY 2008, Audi Q5 (8R_) from MY 2008 and Audi A5 Cabriolet (8F_) from MY 2009

Features of the refrigerant system:

- Expansion Valve
- Fluid Reservoir
- Refrigerant pipe with inner heat exchanger.
- Denso A/C compressors with an A/C compressor regulator valve -N280- , refer to ⇒ Heating, Ventilation and Air Conditioning; Rep. Gr. 87 ; Description and Operation (vehicle-specific repair manual) and to the Electronic Parts Catalog.

Vehicle model	Production period	Total quantity of oil in refrigerant circuit in cm^3	Quantity of refrigerant oil in replacement compressor in cm^3	Differing features of this refrigerant circuit
Audi A4	As of 05.07	150 + / - 10	150 + / - 10	• Denso A/C compressor “6 SEU 14“ and “7 SEU 17“
	As of 08.11	80 + / - 10	80 + / - 10	• Denso A/C compressor, type 6 SAS 14 with magnetic clutch
Audi A5 Coupe and Sportback	As of 05.07	150 + / - 10	150 + / - 10	• Denso A/C compressor “6 SEU 14“ and “7 SEU 17“
	As of 08.11	80 + / - 10	80 + / - 10	• Denso A/C compressor, type 6 SAS 14 with magnetic clutch
Audi Q5	As of 09.08	150 + / - 10	150 + / - 10	• Denso A/C compressor “6 SEU 14“ and “7 SEU 17“
	As of 08.11	80 + / - 10	80 + / - 10	• Denso A/C compressor, type 6 SAS 14 with magnetic clutch
Audi A5 Cabriolet	As of 03.09	150 + /- 10	150 + / - 10	• Denso A/C compressor “6 SEU 14“ and “7 SEU 17“
	As of 08.11	80 + / - 10	80 + / - 10	• Denso A/C compressor, type 6 SAS 14 with magnetic clutch
Audi RS 5	As of 03.10	150 + /- 10	150 + / - 10	• Denso A/C compressor “7 SEU 17“

Copyright by AUDI AG. Copying for private or commercial purposes, in part or in whole, is not permitted unless authorised by AUDI AG. AUDI AG does not guarantee or accept any liability with respect to the correctness of information in this document. Copyright by AUDI AG.

Downloaded from www.Manualslib.com manuals search engine

Note

- *The replacement compressor contains the full quantity of oil intended for the refrigerant circuit. On A/C compressor replacement, the quantity of oil in the A/C compressor is therefore to be adjusted. Refer to* *⇒ "5 Removal and Installation", page 191* .
- *At start of production, A/C compressors manufactured by Denso (type 6 SEU 14) on 4 and 6 cylinder vehicles Engine and type 7 SEU 17 on vehicles with 8 cylinders engine, this A/C compressor does not have an A/C clutch (it is driven by the engine). Compressors from other manufacturers may also be installed at a later time, depending on the engine. Refer to Electronic Parts Catalog and ⇒ Heating, Ventilation and Air Conditioning; Rep. Gr. 87 ; Description and Operation (vehicle-specific repair manual).*
- *As of MY 12, certain engines and A/C compressors that in addition to the A/C compressor regulator valve have an A/C clutch -N25- attached to the belt pulley. Refer to ⇒ Heating, Ventilation and Air Conditioning; Rep. Gr. 87 ; Description and Operation (vehicle-specific repair manual) and to the Electronic Parts Catalog.*
- *These A/C compressors are available as replacement parts with different oil fill capacities, therefore note capacity on the A/C compressor and the exact part number. Refer to the ⇒ Heating, Ventilation and Air Conditioning; Rep. Gr. 87 ; Removal and Installation (vehicle-specific repair manual) and Electronic Parts Catalog.*
- *The reason for the different oil capacities inside the A/C compressor is due to the design of the A/C compressor (with or with an oil separator on the high pressure connection) or to the design of the refrigerant circuit if the A/C compressors are have the identical design. Pay attention to the different capacities. Too much oil in the circuit leads to higher pressures and reduces cooling performance of the system. Too little oil may lead to lubrication problems in the compressor.*
- *A data plate may be attached to the A/C compressor by the manufacturer, indicating the part number and refrigerant oil quantity.*

Protected by copyright. Copying for private or commercial purposes, in part or in whole, is not permitted unless authorised by AUDI AG. AUDI AG does not guarantee or accept any liability with respect to the correctness of information in this document. Copyright by AUDI AG.

3.4.10 Capacities, Audi 100 and Audi A6 (4A_), from MY 98

Features of the refrigerant system:

- Restrictor
- Reservoir
- A/C compressor manufactured by Denso or Zexel / Valeo, refer to ⇒ Heating, Ventilation and Air Conditioning; Rep. Gr. 87 ; Description and Operation (vehicle-specific repair manual) and to the Electronic Parts Catalog.

Vehicle model	Production period	Total quantity of oil in refrigerant circuit in cm^3	Quantity of refrigerant oil in replacement compressor in cm^3
Audi 100/Audi A6	From 10.92 to 03.97	250 + 50	250 + 50

Downloaded from www.Manualslib.com manuals search engine

Note

- *The replacement compressor contains the full quantity of oil intended for the refrigerant circuit. On A/C compressor replacement, the quantity of oil in the A/C compressor is therefore to be adjusted. Refer to* *⇒ "5 Removal and Installation", page 191* .
- *Beginning the production year 2006, the name of the Zexel A/C compressor was changed from Zexel to Valeo.*

3.4.11 Capacities, Audi A6 (4B_) 98 and Audi allroad from MY 05

Features of the refrigerant system:

- Restrictor
- Reservoir
- Denso or Zexel / Valeo A/C compressors with A/C clutch - N25- . Refer to ⇒ Heating, Ventilation and Air Conditioning; Rep. Gr. 87 ; Description and Operation (vehicle-specific repair manual) and to the Electronic Parts Catalog.

Vehicle model	Production period	Total quantity of oil in refrigerant circuit in cm^3	Quantity of refrigerant oil in replacement compressor in cm^3	Differing features of this refrigerant circuit
Audi A6/Audi allroad • 4-cylinder Gasoline engine except 2.0 l • 6-cylinder Gasoline engine except 3,0 l	As of 04.97 all	250 + 50	250 + 50	• See notes below
Audi A6/Audi allroad • 4-cylinder Diesel engine • 6-cylinder Diesel engine (see notes for Audi allroad)	From 04.97 to 05.01	250 + 50	250 + 50	• See notes below
Audi A6 • 8-cylinder engine (with chain-driven camshaft)	As of 04.97 all	250 + 50	250 + 50	• See notes below

Protected by copyright. Copying for private or commercial purposes, in part or in whole, is not permitted unless authorised by AUDI AG. AUDI AG does not guarantee or accept any liability with respect to the correctness of information in this document. Copyright by AUDI AG.

Downloaded from www.Manualslib.com manuals search engine

Note

- *The replacement compressor contains the full quantity of oil intended for the refrigerant circuit. On A/C compressor replacement, the quantity of oil in the A/C compressor is therefore to be adjusted. Refer to* *⇒ "5 Removal and Installation", page 191* .
- *The Audi A6 are equipped with different A/C compressors depending on engine and production period.*
- *As of model year 2002, the Audi A6 features compressors with A/C clutch or regulator valve (different oil quantities) depending on the engine. For the Audi allroad with 6 cylinder. diesel engine, this gradual change is introduced in model year 2003. Refer to ⇒ Heating, Ventilation and Air Conditioning; Rep. Gr. 87 ; Description and Operation (vehicle-specific repair manual) and Electronic Parts Catalog.*
- *Beginning the production year 2006, the name of the Zexel A/C compressor was changed from Zexel to Valeo.*

Features of the refrigerant system:

- Restrictor
- Reservoir
- Denso A/C compressors with an A/C compressor regulator valve -N280- , refer to ⇒ Heating, Ventilation and Air Conditioning; Rep. Gr. 87 ; Description and Operation (vehicle-specific repair manual) and to the Electronic Parts Catalog.

Vehicle model	Production period	Total quantity of oil in refrigerant circuit in cm^3	Quantity of refrigerant oil in replacement compressor in cm^3	Differing features of this refrigerant circuit
Audi A6 • 4-cylinder Gasoline engine 2.0 l • 6-cylinder Gasoline engine 3.0 l	All	220 + 20	220 + 20	Compressor type 6 SEU 12 or 7 SEU 16 (see notes below)
Audi A6/Audi allroad • 4-cylinder Diesel engine • 6-cylinder Diesel engine (see notes for Audi allroad)	As of 05.01	245 + 20	245 + 20	Compressor type 6 SEU 12 or 7 SEU 16 (see notes below)
Audi allroad • 8-cylinder engine (with chain-driven camshaft)	All	220 + 20	220 + 20	A/C compressor type 7 SEU 17 (see notes below)

Protected by copyright. Copying for private or commercial purposes, in part or in whole, is not permitted unless authorised by AUDI AG. AUDI AG does not guarantee or accept any liability with respect to the correctness of information in this document. Copyright by AUDI AG.

Downloaded from www.Manualslib.com manuals search engine

Note

- *The replacement compressor contains the full quantity of oil intended for the refrigerant circuit. On A/C compressor replacement, the quantity of oil in the A/C compressor is therefore to be adjusted. Refer to* *⇒ "5 Removal and Installation", page 191* .
- *The Audi A6 are equipped with different A/C compressors depending on engine and production period.*
- *As of model year 2002, the Audi A6 features compressors with A/C clutch or regulator valve (different oil quantities) depending on the engine. For the Audi allroad with 6 cyl. diesel engine, the change is introduced gradually in model year 2003.*
- *The replacement A/C compressor with an A/C compressor regulator valve -N280- can have different oil capacities; pay close attention to the exact part number. Refer to ⇒ Heating, Ventilation and Air Conditioning; Rep. Gr. 87 ; Removal and Installation (vehicle-specific repair manual) and to the Electronic Parts Catalog.*
- *The reason for the different oil capacities inside the A/C compressor is due to the design of the A/C compressor (with or with an oil separator on the high pressure connection) or to the design of the refrigerant circuit if the A/C compressors are have the identical design. Pay attention to the different capacities. Too much oil in the circuit leads to higher pressures and reduces cooling performance of the system. Too little oil may lead to lubrication problems in the compressor.*
- *A data plate may be attached to the A/C compressor by the manufacturer, indicating the part number and refrigerant oil quantity.*

3.4.12 Capacities, Audi A6 (4F_), from MY 05

Note

Applies also to the Audi S6 and the Audi RS 6.

Features of the refrigerant system:

- Restrictor
- Reservoir
- Denso A/C compressors with an A/C compressor regulator valve -N280- , refer to ⇒ Heating, Ventilation and Air Conditioning; Rep. Gr. 87 ; Description and Operation (vehicle-specific repair manual) and to the Electronic Parts Catalog.

Vehicle model	Production period	Total quantity of oil in refrigerant circuit in cm^3	Quantity of refrigerant oil in replacement compressor in cm^3
Audi A6 / S6	As of 04.04	130^{+} / - 10	130^{+} / - 10
Audi RS 6	As of 05.08	130^{+} / - 10	Depending on the version of the A/C compressor (see note below) ♦ 130^{+} / - 10

Protected by copyright. Copying for private or commercial purposes, in part or in whole, is not permitted unless authorised by AUDI AG. AUDI AG does not guarantee or accept any liability with respect to the correctness of information. Copyright © AUDI AG.

Downloaded from www.Manualslib.com manuals search engine

Note

- *The replacement compressor contains the full quantity of oil intended for the refrigerant circuit. On A/C compressor replacement, the quantity of oil in the A/C compressor is therefore to be adjusted.*
- *The Audi A6 are equipped with different A/C compressors depending on engine and production period.*
- *The replacement part for this A/C compressor has different oil capacities. Pay close attention to the exact part number. Refer to ⇒ Heating, Ventilation and Air Conditioning; Rep. Gr. 87 ; Removal and Installation (vehicle-specific repair manual) and to the Electronic Parts Catalog.*
- *A data plate may be attached to the A/C compressor by the manufacturer, indicating the part number and refrigerant oil quantity.*
- *The compressor installed at the factory for a 10-cylinder TFSI engine (Audi R S6) has a smaller quantity of refrigerant oil (70 + / - 10 cm^3) than the compressor for the 10-cylinder FSI engine (Audi S6) and other engines (130 + / - 10 cm^3)due to the different testing procedures for the engines (the compressors at present differ only in part number and quantity of refrigerant oil, see also the compressor label). When adjusting the total oil quantity in the refrigerant circuit for a 10-cylinder TFSI engine (Audi RS 6) at the factory, the oil quantity that was reduced in the compressor (60 + / - 10 cm^3), has to be filled somewhere else in the refrigerant circuit. This is not necessary in Service because the replacement A/C compressor is delivered with the original oil capacity (130 + / - 10 cm^3) (it would only be necessary in Service if a new A/C compressor with a lower oil capacity is being installed). Refer to the Electronic Parts Catalog.*

3.4.13 Capacities, Audi A6 (4G_) from MY 11 and Audi A7 (4G_) from MY 11

Protected by copyright. Copying for private or commercial purposes, in part or in whole, is not permitted unless authorised by AUDI AG. AUDI AG does not guarantee or accept any liability with respect to the correctness of information in this document. Copyright by AUDI AG.

Features of the refrigerant system:

- Expansion Valve
- Fluid Reservoir
- Refrigerant pipe with inner heat exchanger.
- Denso A/C compressors with an A/C compressor regulator valve -N280- , refer to ⇒ Heating, Ventilation and Air Conditioning; Rep. Gr. 87 ; Description and Operation (vehicle-specific repair manual) and to the Electronic Parts Catalog.

Vehicle model	Production period	Total quantity of oil in refrigerant circuit in cm^3	Quantity of refrigerant oil in replacement compressor in cm^3	Differing features of this refrigerant circuit
Audi A6	As of 02.11	120 + / - 10	120 + / - 10	• Denso A/C compressor, type 6 SEU 14 with an oil separator
Audi A7	As of 10.10	120 + / - 10	120 + / - 10	• Denso A/C compressor, type 6 SEU 14 with an oil separator

Downloaded from www.Manualslib.com manuals search engine

Note

- *The replacement compressor contains the full quantity of oil intended for the refrigerant circuit. On A/C compressor replacement, the quantity of oil in the A/C compressor is therefore to be adjusted. Refer to*
  ⇒ "5 Removal and Installation", page 191 .
- *At the start of production, the A/C compressors manufactured by Denso (type 6 SEU 14) were installed. A/C compressors from other manufacturers or another type may also be installed at a later time. Refer to the Electronic Parts Catalog and ⇒ Heating, Ventilation and Air Conditioning; Rep. Gr. 87 ; Description and Operation (vehicle-specific repair manual).*
- *These A/C compressors are available as replacement parts with different oil fill capacities, therefore note capacity on the A/C compressor and the exact part number. Refer to the ⇒ Heating, Ventilation and Air Conditioning; Rep. Gr. 87 ; Removal and Installation (vehicle-specific repair manual) and Electronic Parts Catalog.*
- *The reason for the different oil capacities inside the A/C compressor is due to the design of the A/C compressor (with or with an oil separator on the high pressure connection) or to the design of the refrigerant circuit if the A/C compressors are have the identical design. Pay attention to the different capacities. Too much oil in the circuit leads to higher pressures and reduces cooling performance of the system. Too little oil may lead to lubrication problems in the compressor.*
- *A data plate may be attached to the A/C compressor by the manufacturer, indicating the part number and refrigerant oil quantity.*

3.4.14 Capacities, Audi V8 (4C_) from MY 94

Features of the refrigerant system:

- Restrictor (not colored).
- Reservoir
- Zexel / Valeo A/C compressors, refer to ⇒ Heating, Ventilation and Air Conditioning; Rep. Gr. 87 ; Description and Operation (vehicle-specific repair manual) and Electronic Parts Catalog.

Vehicle model	Production period	Total quantity of oil in refrigerant circuit in cm^3	Quantity of refrigerant oil in replacement compressor in cm^3
Audi V8	From 10.92 to 10.93	250 + 50	250 + 50

Note

Protected by copyright. Copying for private or commercial purposes, in part or in whole, is not permitted unless authorised by AUDI AG. AUDI AG does not guarantee or accept any liability with respect to the correctness of information in this document. Copyright by AUDI AG.

- *The replacement compressor contains the full quantity of oil intended for the refrigerant circuit. On A/C compressor replacement, the quantity of oil in the A/C compressor is therefore to be adjusted. Refer to*
  ⇒ "5 Removal and Installation", page 191 .
- *Beginning the production year 2006, the name of the Zexel A/C compressor was changed from Zexel to Valeo.*

Downloaded from www.Manualslib.com manuals search engine

3.4.15 Capacities, Audi A8 (4D_) from MY 94

Features of the refrigerant system:

- Restrictor
- Reservoir
- A/C compressor manufactured by Denso or Zexel / Valeo, refer to ⇒ Heating, Ventilation and Air Conditioning; Rep. Gr. 87 ; Description and Operation (vehicle-specific repair manual) and to the Electronic Parts Catalog.

Vehicle model	Production period	Total quantity of oil in refrigerant circuit in cm^3	Quantity of refrigerant oil in replacement compressor in cm^3
Audi A8	As of 05.94	250 + 50	250 + 50

Note

- *The replacement compressor contains the full quantity of oil intended for the refrigerant circuit. On A/C compressor replacement, the quantity of oil in the A/C compressor is therefore to be adjusted. Refer to* *⇒ "5 Removal and Installation", page 191* .
- *Exclusive use was made at the start of production of Zexel / Valeo A/C compressors. As of model year 1996, production was gradually switched to Denso compressors, refer to ⇒ Heating, Ventilation and Air Conditioning; Rep. Gr. 87 ; Description and Operation (vehicle-specific repair manual) and to the Electronic Parts Catalog.*
- *Beginning the production year 2006, the name of the Zexel A/C compressor was changed from Zexel to Valeo.*

3.4.16 Capacities, Audi A8 (4E_) from MY 03

Features of the refrigerant system:

- Restrictor
- Reservoir
- Denso A/C compressors with an A/C compressor regulator valve -N280- , refer to ⇒ Heating, Ventilation and Air Conditioning; Rep. Gr. 87 ; Description and Operation (vehicle-specific repair manual) and to the Electronic Parts Catalog.

Protected by copyright. Copying for private or commercial purposes, in part or in whole, is not permitted unless authorised by AUDI AG. AUDI AG does not guarantee or accept any liability with respect to the correctness of information in this document. Copyright by AUDI AG.

Vehicle model	Production period	Total quantity of oil in refrigerant circuit in cm^3	Quantity of refrigerant oil in replacement compressor in cm^3	Differing features of this refrigerant circuit
Audi A8 • 8-cylinder Gasoline engine with 3.7L or 4.2L (except FSI)	As of 10.02 all	200^{+} / - 10	200^{+} / - 10	A/C compressor type 7 SEU 16 (see notes below)
• 6 and 12 cylinder Gasoline engine • 6 and 8 cylinder diesel engine	From 10.02 to 01.04	200^{+}/ - 10	200^{+}/ - 10	

Downloaded from www.Manualslib.com manuals search engine

Vehicle model	Production period	Total quantity of oil in refrigerant circuit in cm^3	Quantity of refrigerant oil in replacement compressor in cm^3	Differing features of this refrigerant circuit
• 6, 10 and 12 cylinder Gasoline engine • 6 and 8 cylinder diesel engine • 8-cylinder 4.2L gasoline engine (only FSI)	As of 01.04	$150^{+}/_{-}10$	$150^{+}/_{-}10$	

Note

- *The replacement compressor contains the full quantity of oil intended for the refrigerant circuit. On A/C compressor replacement, the quantity of oil in the A/C compressor is therefore to be adjusted. Refer to* *⇒ "5 Removal and Installation", page 191* .
- *The Audi A8 is equipped with different A/C compressors depending on engine and production period.*
- *The replacement part for this A/C compressor has different oil capacities. Pay close attention to the exact part number. Refer to ⇒ Heating, Ventilation and Air Conditioning; Rep. Gr. 87 ; Removal and Installation (vehicle-specific repair manual) and to the Electronic Parts Catalog.*
- *At start of production, the compressor types in the first two lines of the table were supplied with a refrigerant oil quantity of 200 cm^3. These compressors can be recognized from the index of the part number (4E0 260 805 with index C,D, E, F, J, L or S). In model year 2004 (as of approximately 01.04), a gradual change was made to other types of compressor with a refrigerant oil quantity of 150 cm^3. These compressors can be recognized from the index of the part number (4E0 260 805 with the index G, H, T, M, N, Q, or double index, for example, AB). Refer to Electronic Parts Catalog (ETKA).*
- *The reason for the different oil capacities inside the A/C compressor is due to the design of the A/C compressor (with or with an oil separator on the high pressure connection) or to the design of the refrigerant circuit if the A/C compressors are have the identical design. Pay attention to the different capacities. Too much oil in the circuit leads to higher pressures and reduces cooling performance of the system. Too little oil may lead to lubrication problems in the compressor.*
- *A data plate may be attached to the A/C compressor by the manufacturer, indicating the part number and refrigerant oil quantity.*

Copying for private or commercial purposes, in part or in whole, is not permitted unless authorised by AUDI AG. AUDI AG does not guarantee or accept any liability with respect to the correctness of information in this document. Copyright by AUDI AG.

3.4.17 Capacities, Audi A8 (4H_) from MY 10

Features of the refrigerant system:

- Expansion Valve
- Depending on the vehicle equipment level with one or two evaporators
- Refrigerant pipe with inner heat exchanger.

Downloaded from www.Manualslib.com manuals search engine

- Dryer cartridge in fluid reservoir on condenser
- Denso A/C compressors with an A/C compressor regulator valve -N280- , refer to ⇒ Heating, Ventilation and Air Conditioning; Rep. Gr. 87 ; Description and Operation (vehicle-specific repair manual) and to the Electronic Parts Catalog.

Vehicle model	Production period	Total quantity of oil in refrigerant circuit in cm^3	Quantity of refrigerant oil in replacement compressor in cm^3	Differing features of this refrigerant circuit
Audi A8	As of 03.10			
♦ Vehicle with one evaporator		$130^{+}/_{-}10$	♦ $130^{+}/_{-}10$	• One evaporator
♦ Vehicle with two evaporators		$130^{+}/_{-}10$		• Two evaporators (see notes below)

Protected by copyright. Copying for private or commercial purposes, in part or in whole, is not permitted unless authorised by AUDI AG. AUDI AG does not guarantee or accept any liability with respect to the correctness of information in this document. Copyright by AUDI AG.

Downloaded from www.Manualslib.com manuals search engine

Note

- *The replacement compressor is already filled with a specific refrigerant oil quantity (currently 130 or 150 + / - 10 cm³, depending on the compressor), this refrigerant oil quantity corresponds to the oil quantity designated for this refrigerant circuit on vehicles with one evaporator. Vehicles with two evaporators have the same oil capacity as vehicles having just one evaporator. Due to the longer refrigerant pipes and the second evaporator, this vehicle does not require more refrigerant inside the refrigerant circuit. The refrigerant circuit in this vehicle is designed so that a smaller portion of the refrigerant oil gets into the refrigerant pipes leading to the second evaporator when the A/C is being used. If the compressor is replaced after cleaning the refrigerant circuit, this refrigerant oil quantity must therefore be added to the refrigerant circuit in vehicles with two evaporators. If compressor is replaced without having to clean the refrigerant circuit, the refrigerant oil quantity in the new compressor to be installed must be adjusted to the oil quantity poured out of the old compressor. Refer to ⇒ "5 Removal and Installation", page 191 .*
- *The reason for the different oil capacities inside the A/C compressor is due to the design of the A/C compressor (with or with an oil separator on the high pressure connection) or to the design of the refrigerant circuit if the A/C compressors are have the identical design. Pay attention to the different capacities. Too much oil in the circuit leads to higher pressures and reduces cooling performance of the system. Too little oil may lead to lubrication problems in the compressor.*
- *These A/C compressors are available as replacement parts with different oil fill capacities, therefore note capacity on the A/C compressor and the exact part number. Refer to the Electronic Parts Catalog.*
- *Too much oil in the circuit leads to higher pressures and reduces cooling performance of the A/C system. Too little oil may lead to lubrication problems in the compressor, therefore note the specified refrigerant oil quantities.*
- *A data plate may be attached to the A/C compressor by the manufacturer, indicating the part number and refrigerant oil quantity.*

3.4.18 Capacities, Audi Q7 (4L_), from MY 06

Features of the refrigerant system:

- Expansion Valve
- Depending on the vehicle equipment level with one or two evaporators
- Dryer cartridge in fluid reservoir on condenser
- Denso A/C compressors with an A/C compressor regulator valve -N280- , refer to ⇒ Heating, Ventilation and Air Conditioning; Rep. Gr. 87 ; Description and Operation (vehicle-specific repair manual) and to the Electronic Parts Catalog.

Protected by copyright. Copying for private or commercial purposes, in part or in whole, is not permitted unless authorised by AUDI AG. AUDI AG does not guarantee or accept any liability with respect to the correctness of information in this document. Copyright by AUDI AG.

Vehicle model	Production period	Total quantity of oil in refrigerant circuit in cm³	Quantity of refrigerant oil in replacement compressor in cm³	Differing features of this refrigerant circuit
Audi Q7	As of 02.06			

Downloaded from www.Manualslib.com manuals search engine

Vehicle model	Production period	Total quantity of oil in refrigerant circuit in cm^3	Quantity of refrigerant oil in replacement compressor in cm^3	Differing features of this refrigerant circuit
♦ Vehicle with one evaporator		$145^{+}/-15$	♦ $150^{+}/-10$ (A/C compressor for a 8-cylinder vehicle)	• One evaporator
♦ Vehicle with two evaporators		$245^{+}/-15$	♦ $140^{+}/-10$ (A/C compressor for a 6-cylinder vehicle)	• Two evaporators (see notes below)

Note

Protected by copyright. Copying for private or commercial purposes, in part or in whole, is not permitted unless authorised by AUDI AG. AUDI AG does not guarantee or accept any liability with respect to the correctness of information in this document. Copyright by AUDI AG.

- *The replacement compressor is already filled with a specific refrigerant oil quantity (currently 140 or $150^{+}/-10$ cm^3, depending on the compressor), this refrigerant oil quantity corresponds to the oil quantity designated for this refrigerant circuit on vehicles with one evaporator. On vehicles with two evaporators, a greater refrigerant oil quantity is required in the refrigerant circuit (currently an additional 100 cm^3) because of the longer refrigerant lines and the second evaporator. If the compressor is replaced after cleaning the refrigerant circuit, this refrigerant oil quantity must therefore be added to the refrigerant circuit (e.g. into opened lines or component connections) in vehicles with two evaporators. If compressor is replaced without having to clean the refrigerant circuit, the refrigerant oil quantity in the new compressor to be installed must be adjusted to the oil quantity poured out of the old compressor. Refer to* *⇒ "5 Removal and Installation", page 191* *.*
- *These A/C compressors are available as replacement parts with different oil fill capacities, therefore note capacity on the A/C compressor and the exact part number. Refer to the Electronic Parts Catalog.*
- *The reason for the different oil capacities inside the A/C compressor is due to the design of the A/C compressor (with or with an oil separator on the high pressure connection) or to the design of the refrigerant circuit if the A/C compressors are have the identical design. Pay attention to the different capacities. Too much oil in the circuit leads to higher pressures and reduces cooling performance of the system. Too little oil may lead to lubrication problems in the compressor.*
- *Too much oil in the circuit leads to higher pressures and reduces cooling performance of the A/C system. Too little oil may lead to lubrication problems in the compressor, therefore note the specified refrigerant oil quantities.*
- *A data plate may be attached to the A/C compressor by the manufacturer, indicating the part number and refrigerant oil quantity.*

3.4.19 Capacities, Audi R8 (42_) from MY 08

Features of the refrigerant system:

Downloaded from www.Manualslib.com manuals search engine

- Restrictor
- Reservoir
- Two condensers switched in sequence
- Denso A/C compressors with an A/C compressor regulator valve -N280- , refer to ⇒ Heating, Ventilation and Air Conditioning; Rep. Gr. 87 ; Description and Operation (vehicle-specific repair manual) and to the Electronic Parts Catalog.

Vehicle model	Production period	Total quantity of oil in refrigerant circuit in cm^3	Quantity of refrigerant oil in replacement compressor in cm^3	Differing features of this refrigerant circuit
Audi R8	As of 03.07	150^{+} / - 10	150^{+} / - 10	A/C compressor 7 SEU 17

Note

- *The replacement compressor contains the full quantity of oil intended for the refrigerant circuit. On A/C compressor replacement, the quantity of oil in the A/C compressor is therefore to be adjusted. Refer to* *⇒ "5 Removal and Installation", page 191* *.*
- *These A/C compressors are available as replacement parts with different oil fill capacities, therefore note capacity on the A/C compressor and the exact part number. Refer to the Electronic Parts Catalog.*
- *The reason for the different oil capacities inside the A/C compressor is due to the design of the A/C compressor (with or with an oil separator on the high pressure connection) or to the design of the refrigerant circuit if the A/C compressors are have the identical design. Pay attention to the different capacities. Too much oil in the circuit leads to higher pressures and reduces cooling performance of the system. Too little oil may lead to lubrication problems in the compressor.*
- *Too much oil in the circuit leads to higher pressures and reduces cooling performance of the A/C system. Too little oil may lead to lubrication problems in the compressor, therefore note the specified refrigerant oil quantities.*
- *A data plate may be attached to the A/C compressor by the manufacturer, indicating the part number and refrigerant oil quantity.*

Presented by AUDI AG. Copying, duplicate or commercial purposes, in part or in whole, is not permitted unless authorised by AUDI AG. AUDI AG does not guarantee or accept any liability with respect to the correctness of information in this document. Copyright by AUDI AG.

Downloaded from www.Manualslib.com manuals search engine

Protected by copyright. Copying for private or commercial purposes, in part or in whole, is not permitted unless authorised by AUDI AG. AUDI AG does not guarantee or accept any liability with respect to the correctness of information in this document. Copyright by AUDI AG.

Downloaded from www.Manualslib.com manuals search engine

4 Diagnosis and Testing

⇒ “4.1 Pressure Gauge, Tests and Measurements“, page 142

⇒ “4.2 Leak Detection“, page 143

⇒ “4.3 Refrigerant Circuit Concerns“, page 151

⇒ “4.4 Pressures, Checking“, page 153

4.1 Pressure Gauge, Tests and Measurements

Indicators on pressure gauge

1 - Temperature scale for refrigerant R134a CF3–CH2F or CH2F–CF3.

2 - Pressure scale

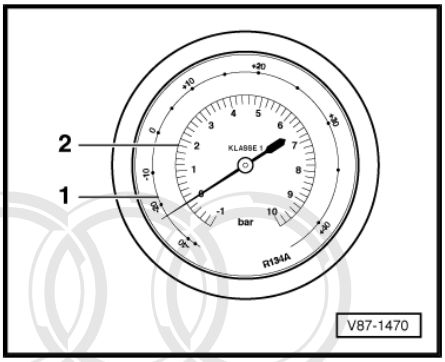

Note

Pressure is measured in different units: 1 MPa (mega Pascal) corresponds to 10 bar positive pressure or 145 psi, 1 bar absolute pressure corresponds to 0 bar positive pressure and thus to the ambient pressure (atmospheric pressure).

The pressure gauge may have one or more temperature scales next to the pressure scale. R134a scale values are allocated respectively in the vapor pressure table. Since various refrigerants create different vapor pressures at the same temperature, each temperature scale is identified for the respective refrigerant.

- The pressure gauges makes it possible to perform the following checks and measurements.

Protected by copyright. Copying for private or commercial purposes, in part or in whole, is not permitted unless authorised by AUDI AG. AUDI AG does not guarantee or accept any liability with respect to the correctness of information in this document. Copyright by AUDI AG.

Pressure And Temperature Measurement At Refrigerant Circuit

- High pressure gauge measures pressure and temperature, which expand uniformly from outlet of A/C compressor via the condenser up to constriction (restrictor, or expansion valve) with A/C system switched on.
- Low pressure gauge measures pressure and temperature, which expand uniformly from constriction (restrictor, or expansion valve) via evaporator up to input of A/C compressor with A/C system switched on.

Note

The relationship between pressure and temperature indicated on the gauges only exists in a refrigerant circuit that contains liquid or vapor, but not gas. In a gaseous state, the temperature is approximately 10° C to 30° C higher than indicated on the gauge.

Verification Of Refrigerant In A Closed Vessel

Refrigerant R134a is present in a closed vessel or in a refrigerant circuit when temperature indicator on the pressure gauge matches the refrigerant temperature (standing fluid adopts the ambient temperature).

A closed vessel or a refrigerant circuit which has been switched off is empty when temperature indication on the pressure gauge is below the temperature of the refrigerant.

Downloaded from www.Manualslib.com manuals search engine

Note

The relationship between pressure and temperature indicated on the gauges no longer applies if no liquid is present and the pressure is built up solely by gas.

4.2 Leak Detection

⇒ "4.2.1 Refrigerant Circuit, Determining Leaks ", page 143

⇒ "4.2.2 Refrigerant Circuit, Tracing Leaks Using Electronic Leak Detector V.A.G 1796", page 144

⇒ "4.2.3 Refrigerant Circuit, Tracing Leaks Using Leak Detection System VAS 6201", page 144

4.2.1 Refrigerant Circuit, Determining Leaks

Note

Protected by copyright. Copying for private or commercial purposes, in part or in whole, is not permitted unless authorised by AUDI AG. AUDI AG does not guarantee or accept any liability with respect to the correctness of information in this document. Copyright by AUDI AG.

- *Minor leaks can be detected using an electronic leak detector or UV leak detector lamp.*
- *This repair manual describes two different methods for detecting leaks in the refrigerant circuit. These methods have been tested and result in success when used correctly.*
- *Many methods for detecting leaks in the refrigerant circuit are offered in the open market. These methods do not always have optimum results and if they are not performed exactly to the specification and may result that several components in the refrigerant circuit have leaks. Also, refrigerant circuit components can be damaged by some methods.*
- Do not repair components with leaks; always replace them.
- Do not charge a leaking refrigerant circuit with refrigerant. Evacuate the circuit and check it for leaks before charging. Refer to ⇒ "2.4.11 Evacuating Refrigerant Circuit", page 89 .

Caution

- ***Audi does not approve the use of chemicals to seal leaks in the refrigerant circuit (leak stop additives).***
- ***Chemicals that seal leaks in the coolant circuit form deposits that affect the function of the A/C system and lead to failure of the A/C system and the A/C service station.***

Note

Chemical materials to seal leaks in the refrigerant circuit react with air or the moisture in the air and form deposits in the refrigerant circuit and the A/C service station that lead to malfunctions in the valves and other components that come into contact with such chemicals. These deposits cannot be removed completely from the components, even by flushing. It is only possible to service the refrigerant circuit by replacing all the components which come in contact with this material.

- Refrigerant circuit, tracing leaks using electronic leak detector V.A.G 1796. Refer to

Downloaded from www.Manualslib.com manuals search engine

⇒ “4.2.2 Refrigerant Circuit, Tracing Leaks Using Electronic Leak Detector V.A.G 1796“, page 144 .

- Leak detection on refrigerant circuit using leak detection system VAS 6201. Refer to
⇒ “4.2.3 Refrigerant Circuit, Tracing Leaks Using Leak Detection System VAS 6201“, page 144 .

4.2.2 Refrigerant Circuit, Tracing Leaks Using Electronic Leak Detector V.A.G 1796

Caution

To prevent more refrigerant than is necessary for the leak test from venting into the air, proceed as follows with the refrigerant circuit completely empty:

– Evacuate the refrigerant circuit with the A/C service station. Refer to ⇒ “2.4.11 Evacuating Refrigerant Circuit“, page 89 .

Note

- *If a larger leak is found during evacuation, find and it and repair it as described. Refer to*
⇒ “2.4.11 Evacuating Refrigerant Circuit“, page 89 .
- *If no leak is found during evacuation or there is a leak that is so small that the location cannot be found, proceed as follows.*

– Fill the evacuated refrigerant circuit with approximately 1000 grams of refrigerant.

Protected by copyright. Copying for private or commercial purposes, in part or in whole, is not permitted unless authorised by AUDI AG. AUDI AG does not guarantee or accept any liability with respect to the correctness of information in this document. Copyright by AUDI AG.

Leak Detection

– Start up leak detector in line with relevant operating instructions.

– Always hold test probe beneath suspected leak.

Depending on the model, leak detection is indicated by an increase in clicking rate or a warning tone (refer to operating instructions for leak detector).

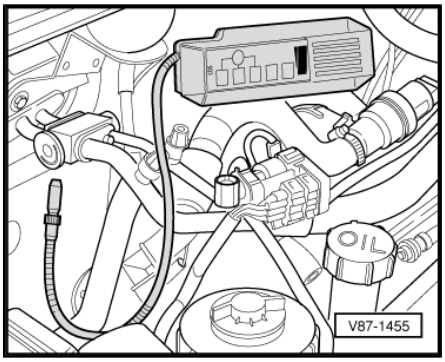

Note

- *Currents of air quickly disperse refrigerant gas. Draughts must therefore be avoided during leak detection.*
- *Refrigerant gas is heavier than air and will escape.*

4.2.3 Refrigerant Circuit, Tracing Leaks Using Leak Detection System VAS 6201

Special tools and workshop equipment required

- Leak Detection System -VAS 6201-
- Hand Pump With Low Pressure Hose -VAS 6201/1-
- Cartridge -VAS 6201/2-
- Cleaning Agent -VAS 6201/3-
- UV leak detection lamp -VAS 6201/4-

Downloaded from www.Manualslib.com manuals search engine

- UV-absorbing safety goggles -VAS 6201/6-
- Sticker -VAS 6201/7-
- Filler tube
  VAS 6201/8
- Protective Gloves -VAS 6201/9-

Note

- *Certain leaks cannot or only with difficulty be found using an electric leak detection unit. Leak detection can be performed using leak detection system VAS 6201 for determining these leaks.*
- *Refrigerant and refrigerant oil escape when there is a leak in the refrigerant circuit. Generally, this oil remains in the vicinity of the leaking area. A small amount of fluorescent fluid must be added into refrigerant circuit so that this oil becomes visible under UV light. This fluid (PAG oil with an additive that lights up under UV light) is added into the refrigerant circuit and distributes itself with the refrigerant oil when the A/C system is switched on.*
- *A/C system must be operated for a minimum of 60 min. so that the additive distributes itself in the entire refrigerant circuit (compressor must be running). Depending on the size of the leak, it may become visible under UV light within that time.*
- *Refrigerant oil with additive that lights up under UV-light can be added directly with an open circuit or be pumped into a filled circuit via service connection on the low pressure side using hand pump VAS6201/1 (from leak detection system VAS 6201).*
- *If the leak detection additive is added to a filled refrigerant circuit via service connection on the low pressure side, a small amount of leak detection additive remains in the service connection. Carefully remove this residual amount so a leaking area is not detected erroneously upon a later leak detection.*
- *If a component in which leak detection additive has been added is being replaced on a circuit, always clean connection areas to other components thoroughly after assembling refrigerant circuit. This residue may be detected erroneously as leaking areas upon later leak detection.*
- *Refrigerant oil and with it leak detection additive reaches into service station when evacuating a refrigerant circuit. Refrigerant oil is separated from refrigerant in oil collector of service station and removed from service station via draining device. The refrigerant oil drained off must not be poured back in. It must be replaced with new refrigerant oil.*
- *If leak detection fluid was filled already in a refrigerant circuit for an earlier repair, note the following: only add new leak detection additive if the refrigerant oil will be replaced. If only a portion of refrigerant oil was replaced, only top-off with a corresponding amount of leak detection fluid as well. For example, if 100 ml of refrigerant oil was replaced in a vehicle with 250 ml, add only 1 ml (cm^3) of leak detection additive.*
- *Certain materials and their connections (for example, oxidation products on aluminum components, corrosion protection growth, etc.) also light up under UV-light.*
- *Depending on the version of the A/C Service Station, stop leak additive can also be added directly at the top. Refer to the Operating Instructions that come with the A/C Service Station.*

Protected by copyright. Copying for private or commercial purposes, in part or in whole, is not permitted unless authorised by AUDI AG. AUDI AG does not guarantee or accept any liability with respect to the correctness of information in this document. Copyright by AUDI AG.

Downloaded from www.Manualslib.com manuals search engine

To prevent more refrigerant than is necessary for the leak test from venting into the air, proceed as follows with the refrigerant circuit completely empty

– Evacuate the refrigerant circuit with the A/C service station. Refer to ⇒ "2.4.11 Evacuating Refrigerant Circuit", page 89 .

Note

- *If a larger leak is found during evacuation, find and it and repair it as described. Refer to* *⇒ "2.4.11 Evacuating Refrigerant Circuit", page 89* *.*
- *If no leak is found during evacuation or there is a leak that is so small that the location cannot be found, proceed as follows.*

If there is a leak that cannot be detected via the evacuating, refer to ⇒ page 146 .

Filling Leak Detection Additive When The Refrigerant Circuit Is Empty

The cartridge -A- contains 15.4 leak detection additive (one unit -B- corresponds to 2.5 ml).

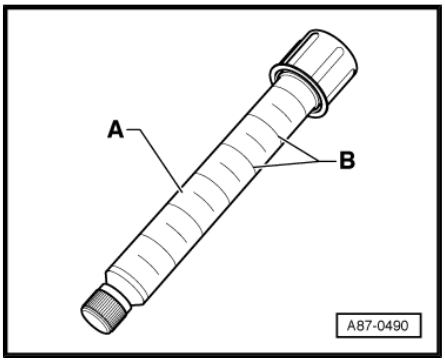

– Assemble Hand pump -VAS 6201/1- item -1- with cartridge item -2- -VAS 6201/2- .

– Insert the Filler tube -VAS 6201/8- (⇒ page 145 item -7-) in the hand pump.

– Open hand pump service valve.

Protected by copyright. Copying for private or commercial purposes, in part or in whole, is not permitted unless authorised by AUDI AG. AUDI AG does not guarantee or accept any liability with respect to the correctness of information in this document. Copyright by AUDI AG.

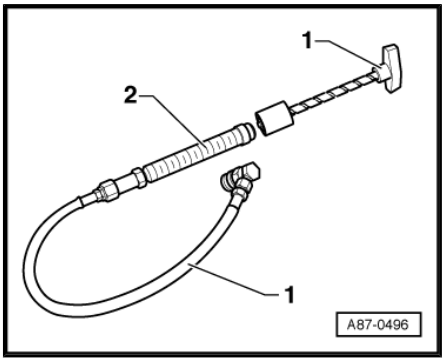

Note

- *Leak detection additive is best added to empty refrigerant circuit via a Service connection or via an opened connection.*
- *If the refrigerant circuit is empty, then it is better to add the leak detection additive at an open connection (for example, when the connection is already open). This way no leak detection additive will remain back in the Service connection and then the connection does not need to cleaned.*

- Add the leak detector additive to the refrigerant circuit at a Service connection. Refer to ⇒ page 148 .
- Add the leak detector additive to the refrigerant circuit at an opened connection. Refer to ⇒ page 147 .

Downloaded from www.Manualslib.com manuals search engine

Add The Leak Detector Additive To The Refrigerant Circuit At An Opened Connection

.

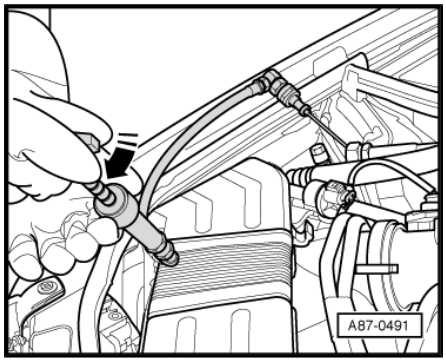

- Open an easily accessible connection point on refrigerant circuit
- Cover area around connection point with foil or absorbent paper.
- Hold tube upwards.
- Tighten the toggle on the hand pump until the leak detection additive comes out of the tube.
- Fill 2.5 +/- 0.5 ml (milliliter = cm^3) leak detection additive into refrigerant circuit.

Copyright. Copying for private or commercial purposes, in part or in whole, is not permitted unless authorised by AUDI AG. AUDI AG does not guarantee or accept any liability with respect to the correctness of information in this document. Copyright by AUDI AG.

Note

If leak detection fluid was filled already in a refrigerant circuit for an earlier repair, note the following: only add new leak detection additive if the refrigerant oil will be replaced. If only a portion of refrigerant oil was replaced, only top-off with a corresponding amount of leak detection fluid as well. For example, if 100 ml of refrigerant oil was replaced in a vehicle with 250 ml, add only 1 ml (cm^3) of leak detection additive.

- Replace O-ring seal at open connection.
- Assemble refrigerant circuit
- Affix a sticker in the area of the service connection with the note that leak detection fluid was added to this refrigerant circuit.
- Evacuate and recharge refrigerant circuit according to specification. Refer to
  ⇒ “2.4.11 Evacuating Refrigerant Circuit“, page 89 and
  ⇒ “2.4.3 Charging Refrigerant Circuit“, page 83 .
- Start the A/C system.

Note

- *A/C system must be operated for a minimum of 60 minutes so that the additive distributes itself in the entire refrigerant circuit (compressor must be running). Depending on the size of the leak, it may become visible under UV light within that time.*
- *Depending on the size and location of the leak, it can now last up to several days until enough refrigerant oil with additive flows out to determine definitely the leaking area.*

- Find the leak in the refrigerant circuit with the UV lamp VAS 6196/4. Refer to ⇒ page 150 .

Downloaded from www.Manualslib.com manuals search engine

Leak Detection Additive With Filled Refrigerant Circuit, Filling

Note

- *If leak detection fluid was filled already in a refrigerant circuit for an earlier repair, note the following: only add new leak detection additive if the refrigerant oil will be replaced. If only a portion of refrigerant oil was replaced, only top-off with a corresponding amount of leak detection fluid as well. For example, if 100 ml of refrigerant oil was replaced in a vehicle with 250 ml, add only 1 ml (cm^3) of leak detection additive.*
- *A small quantity of leak detection additive remains in the service connection. Carefully remove this residual amount so a leaking area is not detected erroneously upon a later leak detection.*

The cartridge -A- contains 15.4 leak detection additive (one unit -B- corresponds to 2.5 ml).

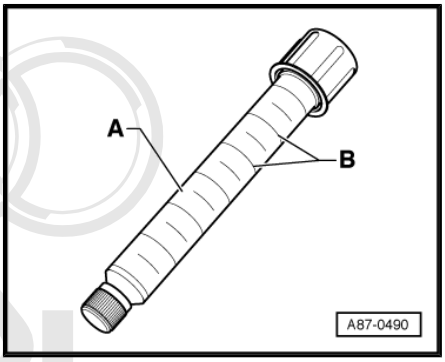

Protected by copyright. Copying for private or commercial purposes, in part or in whole, is not permitted unless authorised by AUDI AG. AUDI AG does not guarantee or accept any liability with respect to the correctness of information in this document. Copyright by AUDI AG.

- Switch off ignition.
- Remove sealing cap from service connection of low pressure side in refrigerant circuit.
- Assemble Hand pump -VAS 6201/1- item -1- with cartridge item -2- -VAS 6201/2- .
- Insert Tube -VAS 6201/8- (⇒ page 145 item -7-) into service coupling and open service coupling by screwing in handwheel. Hold the hose upward and tighten the handle of the hand pump just enough until the leak detection additive starts to emerge from the tube.

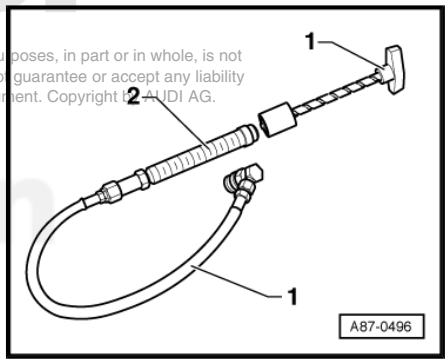

Note

Make sure hand pump hose is completely filled with refrigerant.

- Close service coupling and remove tube from locking mechanism.

Downloaded from www.Manualslib.com manuals search engine

- Cover area around service connection on vehicle with foil or absorbent paper.
- Connect filler unit to refrigerant circuit service connection on vehicle.
- Open service connection by screwing in handwheel.
- Fill 2.5 $^{+}$/-0.5 ml (milliliter = cm^3) leak detection additive into refrigerant circuit by screwing in handle of hand pump toggle.

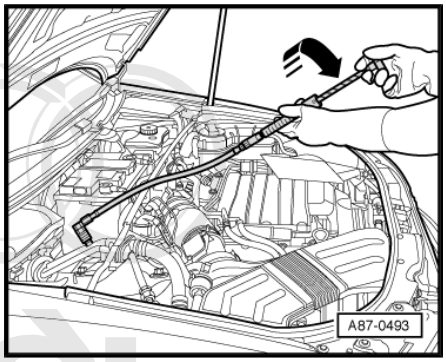

Protected by copyright. Copying for private or commercial purposes, in part or in whole, is not permitted unless authorised by AUDI AG. AUDI AG does not guarantee or accept any liability with respect to the correctness of information in this document. Copyright by AUDI AG.

Downloaded from www.Manualslib.com manuals search engine

- Remove filling device from service connection.
- Remove the rest of the leak detection additive from the service connection, for example with absorbent paper.
- Seal service connection with sealing cap.
- If necessary, clean area around service connection using cleaning agents.
- Affix sticker next to service connection with the note that leak detection fluid was added to this refrigerant circuit.
- Start the A/C system.

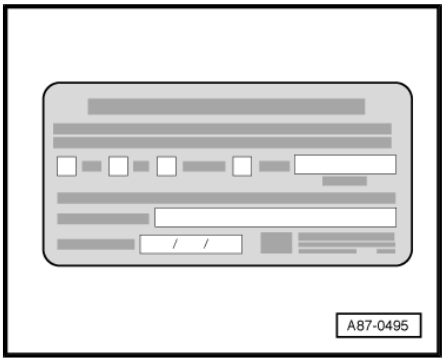

Note

- *A/C system must be operated for a minimum of 60 min. so that the additive distributes itself in the entire refrigerant circuit (compressor must be running). Depending on the size of the leak, it may become visible under UV light within that time.*
- *Depending on the size and location of the leak, it can now last up to several days until enough refrigerant oil with additive flows out to determine definitely the leaking area.*

- Find the leak in the refrigerant circuit with the UV lamp VAS 6196/4. Refer to ⇒ page 150 .

Detecting Leaks On Refrigerant Circuit Using UV Lamp VAS 6196/4

WARNING

Do not look into UV lamp.

Do not direct UV lamp at other people.

Protected by copyright. Copying for private or commercial purposes, in part or in whole, is not permitted unless authorised by AUDI AG. AUDI AG does not guarantee or accept any liability with respect to the correctness of information in this document. Copyright by AUDI AG.

Downloaded from www.Manualslib.com manuals search engine

Note

- *After adding the leak detection additive, the A/C system must be operated for a minimum of 60 min. so that the additive distributes itself in the entire refrigerant circuit (compressor must be running). Depending on the size of the leak, it may become visible under UV light within that time.*
- *Depending on the size and location of the leak, it can now last up to several days until enough refrigerant oil with additive flows out to determine definitely the leaking area.*
- *With leaks on evaporator, leak detection additive is possibly washed off with condensation and flows out via evaporator drain. Since the evaporator is not easily accessible on most vehicles, checking the evaporator drain may indicate if the evaporator is leaking. However, it is necessary for this purpose that leak detection additive has already been in the refrigerant circuit for a long period of time (i.e. a few days).*
- *Protective goggles do not only serve as eye protection but also amplify the illumination of leak detection additive under UV light.*
- *Depending on the accessibility of different components in the refrigerant circuit, it may be necessary to remove some vehicle components such as the bumper or air filter.*
- *Only a little refrigerant oil will get onto certain places on the refrigerant circuit when A/C is being used (for example, on the top cover of the fluid reservoir attached to the condenser on an Audi A8 from MY 10). If there is a leak at this spot, it may take longer until enough refrigerant with refrigerant oil and additive start to leak out, which then can be viewed under UV light. It may be useful to use an electronic leak detector at these locations to find a leak. Refer to* *⇒ "4.2.2 Refrigerant Circuit, Tracing Leaks Using Electronic Leak Detector V.A.G 1796", page 144* .

Protected by copyright. Copying for private or commercial purposes, in part or in whole, is not permitted unless authorised by AUDI AG. AUDI AG does not guarantee or accept any liability with respect to the correctness of information in this document. Copyright by AUDI AG

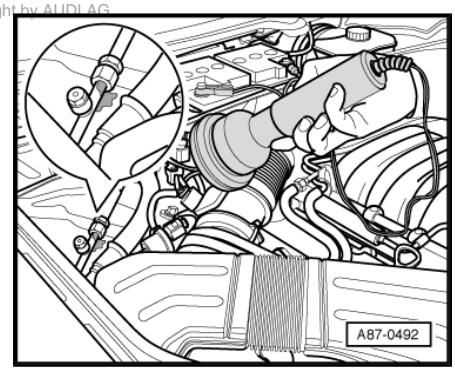

– Move vehicle into a slightly darker area of the workshop (with daylight or bright lighting the effect of the UV light is diminished).
– Check the accessibility of the various components in the refrigerant circuit and remove any components in the area that block access to the refrigerant circuit such as noise insulation and the bumper.
– Wear protective eyewear to protect the eyes.
– Connect the UV-lamp to a 12 volt battery (vehicle battery). Observe correct polarity of connections.
– Switch on UV lamp and illuminate components of refrigerant circuit. Locations where refrigerant, refrigerant oil and leak detection additive has leaked out light up under fluorescent UV light.

4.3 Refrigerant Circuit Concerns

- Electrical system, vacuum system and air duct fault-finding has not revealed any faults. Refer to Guided Fault Finding for the A/C system using Vehicle Diagnosis, Testing & Information System -VAS5051B- , ⇒ Wiring diagrams, Troubleshooting & Component locations and ⇒ Heating, Ventilation and Air Conditioning; Rep. Gr. 87 ; Diagnosis and Testing .
- The OBD/Guided Fault Finding for the A/C System with Vehicle Diagnosis, Testing & Information System -VAS5051B- cannot detect a fault, the A/C compressor shut off condition is

Downloaded from www.Manualslib.com manuals search engine

not displayed in the measured values block (only on vehicles with OBD “A/C System“). Refer to ⇒ Heating, Ventilation and Air Conditioning; Rep. Gr. 87 ; Diagnosis and Testing or “Guided Fault Finding“ using the Vehicle Diagnosis, Testing & Information System -VAS5051B- .

Note

- *For all complaints marked *, refer to ⇒ “4.4 Pressures, Checking“, page 153 .*
- *If a malfunction occurs at only one evaporator in vehicles with two evaporators, also check pressures in the refrigerant circuit.*
- *Observe test requirements. Refer to ⇒ “4.3 Refrigerant Circuit Concerns“, page 151 .*

- Total cooling system failure.*
- Insufficient cooling performance at all vehicles speeds or engine speeds.*
- None or insufficient cooling after driving a few miles.* *
- No cooling or insufficient cooling at one or both evaporator(s) (on vehicles with two evaporators).* *
- Compressor, A/C clutch -N25- or A/C compressor regulator valve -N280- shut off by pressure switch (e.g. -F73-, -F118-, -F129- -F129- or by A/C Control Head -E87- or Climatronic Control Module -J255-) due to excessive or inadequate pressure. *
- None or sharp decrease in fresh-air supply after driving several miles (evaporator iced up).* *

Protected by copyright. Copying for private or commercial purposes, in part or in whole, is not permitted unless authorised by AUDI AG. AUDI AG does not guarantee or accept any liability with respect to the correctness of information in this document. Copyright by AUDI AG.

From these, the following complaints may also occur:

The A/C Compressor Makes Noises

– Tighten compressor securing bolts and compressor bracket using a torque wrench.

– Check routing of refrigerant pipes; they must not touch other components and must not be subject to strain (align if necessary).

Noise (Refrigerant Hammer) Occurring Immediately After Switching On Air Conditioner And/Or When Cornering Or Braking

– Discharge, evacuate and charge refrigerant circuit (too much refrigerant in circuit).

Note

Too much refrigerant oil in the circuit could also cause this problem. This could occur if the amount of refrigerant oil was not adjusted when replacing the A/C compressor.

Water Sprays Out Of Vents (In Dash Panel Or Footwell) Although Air Conditioning System Is Otherwise Functioning Properly

– Check proper routing of condensate drain; it must not be crushed or kinked.

– Check condensation drain valve, it must not be clogged by wax or underbody sealant and must close properly.

Downloaded from www.Manualslib.com manuals search engine

– Check plenum chamber cover; it must not be damaged and must be properly installed (to stop water running into evaporator).

– Check water drains in plenum chamber; they must not be blocked (e.g. by leaves).

4.4 Pressures, Checking

⇒ "4.4.1 Checking Pressure with Service Station", page 153

⇒ "4.4.2 Test Prerequisites", page 154

⇒ "4.4.3 Pressures, Checking ", page 156

⇒ "4.4.4 Checking Pressures For Vehicles With Restrictor and Accumulator - Internally Regulated Compressor", page 159

⇒ "4.4.5 Specified Values For Vehicles With Restrictor and Accumulator - Internally Regulated Compressor", page 159

⇒ "4.4.6 Checking Pressures On Vehicles With Expansion Valve and Fluid Reservoir - Internally Regulated Compressor", page 164

⇒ "4.4.7 Specified values Vehicles With Expansion Valve and Fluid Reservoir - Internally Regulated Compressor", page 165

⇒ "4.4.8 Checking Pressures On Vehicles with Restrictor, Reservoir and A/C Compressor Regulator Valve - Externally Regulated A/C Compressor", page 171

⇒ "4.4.9 Specified Values On Vehicles with Restrictor, Reservoir and A/C Compressor Regulator Valve - Externally Regulated A/C Compressor", page 171

⇒ "4.4.10 Checking Pressures On Vehicles with Restrictor, Accumulator and A/C Compressor Regulator Valve - Externally Regulated Compressor", page 178

⇒ "4.4.11 Specified Values On Vehicles with Restrictor, Accumulator and A/C Compressor Regulator Valve - Externally Regulated Compressor", page 179

Protected by copyright. Copying for private or commercial purposes, in part or in whole, is not permitted unless authorised by AUDI AG. AUDI AG does not guarantee or accept any liability with respect to the correctness of information in this document. Copyright by AUDI AG.

4.4.1 Checking Pressure with Service Station

Note

- *All test conditions marked * are vehicle-specific and are described in the Repair Manual for the relevant vehicle.*
- *Check cooling performance.*
- *Connections with valve and service connections for measurement and testing, refer to ⇒ Heating, Ventilation and Air Conditioning; Rep. Gr. 87 ; Diagnosis and Testing (vehicle-specific repair manual).*
- *Depending on the A/C compressor version, there may be a valve installed on the high pressure side of the A/C compressor, which prevents the liquid refrigerant from flowing back into the compressor once the A/C is turned off. If an A/C compressor with this valve is installed in a vehicle with a refrigerant circuit having an expansion valve, then it may take some time until the pressure in the high pressure side decreases (the expansion is cold and the pressure in the low pressure side quickly increases after it is turned off, the expansion valve closes and the refrigerant flows slowly into the low pressure side). If the A/C compressor is switched on, the pressure on the low pressure side goes down, the expansion valve open and the refrigerant can flow of the low pressure side.*

Downloaded from www.Manualslib.com manuals search engine

Under certain operating conditions, residual moisture in refrigerant circuit can lead to an ice build-up at compressor regulator valve. A/C compressor control is reduced by this ice build-up, evaporator is cooled too intensely and freezes. The freeze-up of the evaporator can be the cause for the following customer complaints:

- After a long drive, A/C system repeatedly or sporadically fails (no cooling or heating performance), after switching off vehicle and after a short time, A/C function is OK again.
- After a long drive, windows fog up from inside, windows are also not cleared by then pressing the Defrost button, after switching off vehicle and after a short time, A/C function is OK again.

Corrective Action

- On vehicles as of model year 2001 equipped with a compressor with A/C compressor regulator valve -N280- , check measured value of evaporator outflow temperature Evaporator vent temperature sensor -G263- (via function “Read measuring value block“). Is the measured value from the sensor below the operating condition described by the customer (at a temperature above 0° C, longer when it is lower than 0° C although the A/C compressor regulator valve is not currently activated) or too high (above 10° C even though the A/C is working correctly). An incorrect measured value can cause the evaporator to ice up. Refer to Vehicle Diagnosis, Testing & Information System -VAS5051B- (“OBD“ or “Guided Fault Finding for the A/C system“) and ⇒ Heating, Ventilation and Air Conditioning; Rep. Gr. 87 ; Diagnosis and Testing (vehicle-specific repair manual).
- If the vehicle does have an Evaporator vent temperature sensor -G263- , check the "Lo temperature" for driver and passenger side, 4 or 5 bars for fresh air blower RPM, air outlet in footwell and fresh air operation under operating conditions specified by customer, for example, using the Footwell vent temperature sensor -G192- . If measured value of sensor is too low (at ambient temperature above 0 °C, colder than 0 °C for a long period of time).
- Check refrigerant line from evaporator to accumulator (thick tube, low pressure side) with engine running. If this line is thickly iced-up when complaint occurs (a thin layer of ice is permitted), this also indicates that the temperature in the evaporator is too low.
- Discharge refrigerant circuit, replace accumulator or fluid reservoir with dryer and evacuate refrigerant circuit for a minimum of 3 hours.

- Test requirements, refer to ⇒ “4.4.2 Test Prerequisites“, page 154 .
- Pressures, checking, refer to ⇒ “4.4.3 Pressures, Checking “, page 156 .
- Continuation of testing depending on design of refrigerant circuit, refer to ⇒ page 158 .

4.4.2 Test Prerequisites

- Radiator and condenser are clean (clean if necessary)
- Thermal insulation at expansion valve OK and properly installed.*
- Ribbed belt is OK and properly tensioned. Ribbed belt for A/C compressor and generator are OK and correctly tensioned.*
- All air ducts, covers and seals OK and properly installed

Protected by copyright. Copying for private or commercial purposes, in part or in whole, is not permitted unless authorised by AUDI AG. AUDI AG does not guarantee or accept any liability with respect to the correctness of information in this document. Copyright by AUDI AG.

Downloaded from www.Manualslib.com manuals search engine

- Fault Finding did not detect any faults in the electrical system or in the vacuum system.* Refer to Vehicle Diagnosis, Testing & Information System -VAS5051B- (“OBD“ or “Guided Fault Finding for the A/C system“) and ⇒ Heating, Ventilation and Air Conditioning; Rep. Gr. 87 ; Diagnosis and Testing (vehicle-specific repair manual).
- Air conditioner On Board Diagnostic (OBD) has not revealed any faults (with engine running and air conditioner switched on), no compressor shutoff criterion displayed in measured value block (vehicles with Air conditioner On Board Diagnostic only)* Refer to Vehicle Diagnosis, Testing & Information System -VAS5051B- (“OBD“ or “Guided Fault Finding for the A/C system“) and ⇒ Heating, Ventilation and Air Conditioning; Rep. Gr. 87 ; Diagnosis and Testing (vehicle-specific repair manual).
- Air flow through dust and pollen filter not obstructed by dirt*
- Air conditioner unit not drawing in secondary air at maximum fresh-air blower speed*, evaporator and heater not drawing in secondary air at maximum fresh-air blower speed*
- Air doors in air conditioner unit, heater and evaporator reach end position*
- Fresh-air intake ducts beneath hood and in passenger compartment as well as corresponding water drain valves OK* . Refer to ⇒ Heating, Ventilation and Air Conditioning; Rep. Gr. 87 ; Diagnosis and Testing (vehicle-specific repair manual).
- Engine is warm
- Vehicle not exposed to direct sunlight. Refer to Refer to ⇒ Heating, Ventilation and Air Conditioning; Rep. Gr. 87 ; Diagnosis and Testing (vehicle-specific repair manual).
- Ambient temperature greater than 15° C
- All instrument panel vents open

– Start the engine.

Adjustment at Front A/C display control head -E87- or Climatronic Control Module -J255- (and Rear A/C display control head -E265- in vehicles with two A/C units):

– Preselect “Auto“ mode (A/C compressor on).

– Set temperature pre-selector switch to LO for driver's side and front passenger's side (and left and right rear seats in vehicles with two A/C units).

Setting on heater controls:

– Press A/C button and Rec- or recirculated air button.

– Turn rotary temperature control towards cold stop.

– Set rotary fresh-air blower control to 4.

The following system test conditions should be met:

- One or more Radiator fan -V7- operated (at least speed 1)*

Note

For some versions, fan is switched on only once the pressure in refrigerant circuit has exceeded a specified value.

- Fresh Air Blower -V2- (and Rear Fresh Air Blower -V80- in vehicles with two A/C units) running at maximum speed.

Protected by copyright. Copying for private or commercial purposes, in part or in whole, is not permitted unless authorised by AUDI AG. AUDI AG does not guarantee or accept any liability with respect to the correctness of information in this document. Copyright by AUDI AG.

Downloaded from www.Manualslib.com manuals search engine

- Recirculated/fresh-air door set to “Recirculated air mode“ (within 1 minute, after starting vehicle, air-flow door is closed and recirculated-air door opened)*
- The coolant shut-off valve closed.*
- Valves of pump valve unit closed and no coolant circulation pump delivery*
- Compressor is actually driven (A/C clutch -N25- operated, overload safeguard (if installed) not tripped)*

Note

The A/C compressor is driven by different components depending on the engine (belt or input shaft). The belt pulley or the drive unit has an overload protection to protect these components and the engine, if the A/C compressor is runs with resistance. Refer to ⇒ Heating, Ventilation and Air Conditioning; Rep. Gr. 87 ; Description and Operation (vehicle-specific repair manual).

4.4.3 Pressures, Checking

◆ Observe test requirements, refer to ⇒ “4.4.2 Test Prerequisites“, page 154 .

– Switch off the ignition.

– Connecting service station. Refer to ⇒ “2.4 A/C Service Station“, page 79 .

– Take pressure gauge readings (two possible results).

◆ Pressure in refrigerant circuit lower than indicated in table

◆ Pressure in refrigerant circuit in line with table or higher

Ambient temperature (in degrees Celsius)	Pressure in refrigerant circuit in bar positive pressure
+15 °C	3.9
+20 °C	4.7
+25 °C	5.6
+30 °C	6.7
+35 °C	7.8
+40 °C	9.1
+45 °C	10.5

Protected by Copyright. Copying for private or commercial purposes, in part or in whole, is not permitted unless authorised by AUDI AG. AUDI AG does not guarantee or accept any liability with respect to the correctness of information in this document. Copyright by AUDI AG.

Downloaded from www.Manualslib.com manuals search engine

Note

- *Temperature of refrigerant circuit components should be equal to ambient temperature. Pressure will deviate from values in table if individual components of refrigerant circuit are warmer or colder.*
- *At absolute pressure, 0 bar corresponds to absolute vacuum. Normal ambient pressure (positive pressure) corresponds to 1 bar absolute pressure. 0 pressure corresponds to an absolute pressure of one bar on most pressure gauges (indicated by -1 bar below 0).*
- *On vehicles with High pressure sensor -G65- or A/C pressure/ temperature sensor -G395- for which measured pressure is displayed in measured value block, pressure measured should coincide using Vehicle Diagnosis, Testing & Information System -VAS5051B- ("OBD" or "Guided Fault Finding for the A/C system") and ⇒ Heating, Ventilation and Air Conditioning; Rep. Gr. 87 ; Diagnosis and Testing (vehicle-specific repair manual).*
- *Pressure is measured in different units: 1 MPa (mega Pascal) corresponds to 10 bar positive pressure or 145 psi, 1 bar absolute pressure corresponds to 0 bar positive pressure and thus to the ambient pressure (atmospheric pressure).*

Pressure In Refrigerant Circuit Lower Than Indicated In Table

Not enough refrigerant in refrigerant circuit

– Determine refrigerant circuit leaks. Refer to ⇒ "4.2.1 Refrigerant Circuit, Determining Leaks ", page 143 .

– Check pressure relief valve.

If pressure relief valve has responded:

– Check coolant fan activation.

– Check refrigerant pipes and hoses for cross-section constrictions caused by inadequate bending radii.

– Check refrigerant pipes and hoses for external damage.

– If no fault is found, clean refrigerant circuit (flush using refrigerant R134a, refer to ⇒ "1.4.13 Refrigerant Circuit Flushing With Refrigerant R134a", page 32 or blow through using compressed air and nitrogen, refer to ⇒ "1.4.12 Refrigerant Circuit Flushing With Compressed Air and Nitrogen ", page 29).

Pressure In Refrigerant Circuit In Line With Table Or Higher

– Start the engine.

– Set air conditioning system to maximum cooling output.

Protected by copyright. Copying for private or commercial purposes, in part or in whole, is not permitted unless authorised by AUDI AG. AUDI AG does not guarantee or accept any liability with respect to the correctness of information in this document. Copyright by AUDI AG.

Note

If the vehicle has a Compressor regulator valve -N280- control current can be read out in measured value block using Vehicle Diagnosis, Testing & Information System -VAS5051B- ("OBD" or "Guided Fault Finding for the A/C System") and ⇒ Heating, Ventilation and Air Conditioning; Rep. Gr. 87 ; Diagnosis and Testing (vehicle-specific repair manual).

If compressor is not driven with engine running or regulating valve is not actuated:

Downloaded from www.Manualslib.com manuals search engine

– Determine and eliminate cause, for example by checking air conditioner DTC memory.
– Observe test conditions.
– Check the A/C clutch -N25- voltage supply. If it is OK, repair the A/C clutch.
– Check the actuation of the A/C compressor regulator valve -N280- using Vehicle Diagnosis, Testing & Information System -VAS5051B- ("OBD" or "Guided Fault Finding for the A/C System") and ⇒ Heating, Ventilation and Air Conditioning; Rep. Gr. 87 ; Diagnosis and Testing (vehicle-specific repair manual).

Note

- *If the low pressure switch was removed to connect the service station, bridge the electrical connections in the corresponding connector for the pressure measurement.*
- *A/C compressor is driven by the engine via A/C Clutch -N25- .*
- *The A/C compressor regulator valve -N280- is actuated by the Front A/C display control head -E87- or the Climatronic control module -J255- . Check using Vehicle Diagnosis, Testing & Information System -VAS5051B- ("OBD" or "Guided Fault Finding for the A/C System") and ⇒ Heating, Ventilation and Air Conditioning; Rep. Gr. 87 ; Diagnosis and Testing (vehicle-specific repair manual).*

Continuation Of Testing Depending On Design Of Refrigerant Circuit

- Checking pressures for vehicles with restrictor and accumulator (with internally regulated compressor), refer to ⇒ "4.4.4 Checking Pressures For Vehicles With Restrictor and Accumulator - Internally Regulated Compressor", page 159 .
- Checking pressures on vehicles with expansion valve and fluid reservoir (with internally regulated compressor), refer to ⇒ "4.4.6 Checking Pressures On Vehicles With Expansion Valve and Fluid Reservoir - Internally Regulated Compressor", page 164 .
- Checking pressures for vehicles with restrictor, reservoir and A/C compressor regulator valve -N280- (externally regulated A/C compressor), refer to ⇒ "4.4.8 Checking Pressures On Vehicles with Restrictor, Reservoir and A/C Compressor Regulator Valve - Externally Regulated A/C Compressor", page 171 .
- Checking pressures on vehicles with restrictor, accumulator and A/C compressor regulator valve -N280- (externally regulated compressor), refer to ⇒ "4.4.10 Checking Pressures On Vehicles with Restrictor, Accumulator and A/C Compressor Regulator Valve - Externally Regulated Compressor", page 178 .

Protected by copyright. Copying for private or commercial purposes, in part or in whole, is not permitted unless authorised by AUDI AG. AUDI AG does not guarantee or accept any liability with respect to the correctness of information in this document. Copyright by AUDI AG.

Downloaded from www.Manualslib.com manuals search engine

4.4.4 Checking Pressures For Vehicles With Restrictor and Accumulator - Internally Regulated Compressor

Note

- *Connecting service station. Refer to* *⇒ "2.4 A/C Service Station", page 79* .
- *Observe test requirements. Refer to* *⇒ "4.4 Pressures, Checking", page 153* .

– Refrigerant circuit, checking pressure with service station, refer to ⇒ "4.4.1 Checking Pressure with Service Station", page 153 .

The pressures with the ignition turned off meet the specifications.

– Start the engine.

– Set engine speed to 2000 RPM.

– Observe pressure gauge of service station.

Protected by copyright. Copying for private or commercial purposes, in part or in whole, is not permitted unless authorised by AUDI AG. AUDI AG does not guarantee or accept any liability with respect to the correctness of information in this document. Copyright by AUDI AG.

Note

- *Switching pressures for refrigerant circuit switches are vehicle-specific.*
- *Connection with valve for low-pressure switch or at evaporator is only to be used for vehicles with no service connection on low-pressure side and inaccessible connection at compressor or accumulator (measurement accuracy). Applies only to certain vehicles, refer to ⇒ Heating, Ventilation and Air Conditioning; Rep. Gr. 87 ; Diagnosis and Testing (vehicle-specific repair manual).*
- Specified values for the refrigerant circuit pressures, refer to ⇒ "4.4.5 Specified Values For Vehicles With Restrictor and Accumulator - Internally Regulated Compressor", page 159 .

4.4.5 Specified Values For Vehicles With Restrictor and Accumulator - Internally Regulated Compressor

High-pressure side

Increasing from initial pressure (when connecting pressure gauges) to a maximum of 20 bar.

Downloaded from www.Manualslib.com manuals search engine

Low-pressure side

Decreasing from initial pressure (when connecting pressure gauges) to the value in the graph.

A - High pressure (measured at service connection) in bar

B - Low pressure (measured at connection with valve at compressor or accumulator) in bar

C - Permissible tolerance range

D - Low pressure (measured at connection with valve for low-pressure switch or at service connection) in bar

E - Permissible tolerance range

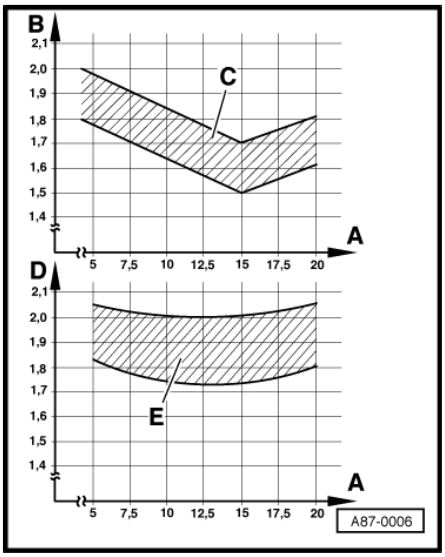

Possible Deviation From Specification	Possible Cause Of Fault	Corrective Action
• High pressure remains constant or increases only slightly (above pressure with engine stopped), • Low pressure quickly drops to value in graph or below • Required cooling output is not attained	Not enough refrigerant in refrigerant circuit	– Localize leak with leak detector and eliminate. – Charge the refrigerant circuit
• High pressure normal • Low pressure in line with value in graph • Required cooling output is not attained		
• High pressure normal • Low pressure too low (see graph) • Required cooling output is not attained		

Note

If no fault is found with this complaint, clean refrigerant circuit (flush using refrigerant R134a, refer to ⇒ "1.4.13 Refrigerant Circuit Flushing With Refrigerant R134a", page 32 or blow through using compressed air and nitrogen, refer to ⇒ "1.4.12 Refrigerant Circuit Flushing With Compressed Air and Nitrogen ", page 29).

Copyright. Copying for private or commercial purposes, in part or in whole, is not permitted unless authorised by AUDI AG. AUDI AG does not guarantee or accept any liability with respect to the correctness of information in this document. Copyright by AUDI AG.

Downloaded from www.Manualslib.com manuals search engine

Possible Deviation From Specification	Possible Cause Of Fault	Corrective Action
• High pressure does not increase or only increases slightly above pressure with engine stopped. • Low pressure does not drop or drops only slightly. • Required cooling output is not attained	♦ The A/C compressor does not activate (the magnetic clutch). ♦ The A/C compressor is not being driven.	– Check the A/C compressor drive. Refer to ⇒ Heating, Ventilation and Air Conditioning; Rep. Gr. 87 ; Diagnosis and Testing .
	♦ Constriction or obstruction in refrigerant circuit (for example, inside the refrigerant line between the Service connection “low pressure side“ and the A/C compressor).	– Clean refrigerant circuit (flush with refrigerant R134a, refer to ⇒ “1.4.13 Refrigerant Circuit Flushing With Refrigerant R134a“, page 32 or blow through with compressed air and nitrogen, refer to ⇒ “1.4.12 Refrigerant Circuit Flushing With Compressed Air and Nitrogen “, page 29). – Replace hose or pipe if kinked or constricted
	♦ A/C compressor faulty.	– Replace A/C compressor.

Possible Deviation From Specification	Possible Cause Of Fault	Corrective Action
• High pressure increases above specification • Low pressure quickly drops to value in graph or below • Required cooling output is not attained	Constriction or obstruction in refrigerant circuit	– Run hand over refrigerant circuit to check for differences in temperature • If difference in temperature is found at one component: – Replace hose or pipe if kinked or constricted – In the event of an obstruction, clean refrigerant circuit (flush with refrigerant R134a, refer to ⇒ “1.4.13 Refrigerant Circuit Flushing With Refrigerant R134a“, page 32 or blow through with compressed air and nitrogen, refer to ⇒ “1.4.12 Refrigerant Circuit Flushing With Compressed Air and Nitrogen “, page 29). • If no malfunction can be found: – Clean refrigerant circuit (flush with refrigerant R134a, refer to ⇒ “1.4.13 Refrigerant Circuit Flushing With Refrigerant R134a“, page 32 or blow through with compressed air and nitrogen, refer to ⇒ “1.4.12 Refrigerant Circuit Flushing With Compressed Air and Nitrogen “, page 29).

Protected by copyright. Copying for private or commercial purposes, in part or in whole, is not permitted unless authorised by AUDI AG. AUDI AG does not guarantee or accept any liability with respect to the correctness of information in this document. Copyright by AUDI AG.

Downloaded from www.Manualslib.com manuals search engine

Possible Deviation From Specification	Possible Cause Of Fault	Corrective Action
• High and low pressure normal at first After some time, • high pressure increases above specification • Low pressure quickly drops to value in graph or below, • Required cooling output is no longer attained.	Moisture in refrigerant circuit	– Check accumulator (with dryer) and restrictor and replace if necessary, then evacuate refrigerant circuit for at least 3 hours (see note) – Clean refrigerant circuit (flush with refrigerant R134a, refer to ⇒ "1.4.13 Refrigerant Circuit Flushing With Refrigerant R134a", page 32 or blow through with compressed air and nitrogen, refer to ⇒ "1.4.12 Refrigerant Circuit Flushing With Compressed Air and Nitrogen ", page 29).
• High and low pressure normal at first • After lengthy operating period, low pressure drops excessively (evaporator ices up)		

Note

- *If problem involving moisture in refrigerant circuit only occurs after a lengthy operating period or only infrequently (low pressure drops below specification and evaporator ices up), it is sufficient to replace the dryer (adjust quantity of refrigerant oil). Refrigerant circuit is then to be evacuated for at least 3 hours.*
- *It is not initially necessary to clean the refrigerant circuit (flush using refrigerant R134a, refer to ⇒ "1.4.13 Refrigerant Circuit Flushing With Refrigerant R134a", page 32 or blow through using compressed air and nitrogen, refer to ⇒ "1.4.12 Refrigerant Circuit Flushing With Compressed Air and Nitrogen ", page 29) when this problem occurs since normally there is only a small quantity of moisture in the system which can be removed by lengthy evacuation.*

Protected by copyright. Copying for private or commercial purposes, in part or in whole, is not permitted unless authorised by AUDI AG. AUDI AG does not guarantee or accept any liability with respect to the correctness of information in this document. Copyright by AUDI AG.

Possible Deviation From Specification	Possible Cause Of Fault	Corrective Action
• High pressure normal • Low pressure too low (see graph) • The required cooling performance is obtained	A/C compressor faulty.	– Clean refrigerant circuit (flush with refrigerant R134a, refer to ⇒ "1.4.13 Refrigerant Circuit Flushing With Refrigerant R134a", page 32 or blow through with compressed air and nitrogen, refer to ⇒ "1.4.12 Refrigerant Circuit Flushing With Compressed Air and Nitrogen ", page 29). – Replace A/C compressor.

Downloaded from www.Manualslib.com manuals search engine

Note

- *For the malfunction "high pressure normal, low pressure too low" With this malfunction, evaporator may ice up or the Low pressure switch -F73- turns off the A/C compressor, although quantity of refrigerant in circuit is OK.*
- *On the Audi 100, Audi A6 (up to model year 1997) and Audi V8, this fault may result in compressor being shut off by control head (if temperature at fresh-air blower drops below -3 °C) ⇒ Heating, Ventilation and Air Conditioning; Rep. Gr. 87 ; Diagnosis and Testing .*

Protected by copyright. Copying for private or commercial purposes, in part or in whole, is not permitted unless authorised by AUDI AG. AUDI AG does not guarantee or accept any liability with respect to the correctness of information in this document. Copyright by AUDI AG.

Possible Deviation From Specification	Possible Cause Of Fault	Corrective Action
• High pressure normal or too high • Low pressure too high (see graph) • A/C compressor noise (particularly after switch-on) • Required cooling output is not attained	To much refrigerant in the circuit.	– Extract refrigerant from refrigerant circuit • If quantity of refrigerant extracted roughly corresponds to specified capacity: – Replace A/C compressor. • If quantity of refrigerant extracted is substantially greater than specified capacity: – Charge the refrigerant circuit – Repeat test

Possible Deviation From Specification	Possible Cause Of Fault	Corrective Action
• High and low pressure normal • Required cooling output is not attained	To much refrigerant oil in the circuit.	– Discharge refrigerant circuit – Clean refrigerant circuit (flush with refrigerant R134a, refer to ⇒ "1.4.13 Refrigerant Circuit Flushing With Refrigerant R134a", page 32 or blow through with compressed air and nitrogen, refer to ⇒ "1.4.12 Refrigerant Circuit Flushing With Compressed Air and Nitrogen ", page 29).

Downloaded from www.Manualslib.com manuals search engine

Possible Deviation From Specification	Possible Cause Of Fault	Corrective Action
• High and low pressure normal • A/C compressor noise (particularly after switch-on) • The required cooling performance is obtained		

Note

- *Overfilling with refrigerant oil can occur if, for example, the compressor has been replaced without adjusting the quantity of refrigerant oil.*
- *If there is too much refrigerant oil in the circuit, the compressor must be drained and the accumulator must be replaced. After cleaning the refrigerant circuit (flushing with refrigerant R134a, refer to ⇒ "1.4.13 Refrigerant Circuit Flushing With Refrigerant R134a", page 32 or blowing through using compressed air and nitrogen, refer to ⇒ "1.4.12 Refrigerant Circuit Flushing With Compressed Air and Nitrogen ", page 29) the correct quantity of refrigerant oil is filled into the circuit, refer to ⇒ "3.4 Refrigerant Oil Capacities", page 119 .*

4.4.6 Checking Pressures On Vehicles With Expansion Valve and Fluid Reservoir - Internally Regulated Compressor

Note

- *Connecting service station. Refer to ⇒ "2.4 A/C Service Station", page 79 .*
- *Observe test requirements. Refer to ⇒ "4.4 Pressures, Checking", page 153 .*

Protected by copyright. Copying for private or commercial purposes, in part or in whole, is not permitted unless authorised by AUDI AG. AUDI AG does not guarantee or accept any liability with respect to the correctness of information in this document. Copyright by AUDI AG.

– Refrigerant circuit, checking pressure with service station, refer to ⇒ "4.4.1 Checking Pressure with Service Station", page 153 .

The pressures with the ignition turned off meet the specifications.

– Start the engine.
– Set engine speed to 2000 RPM.
– Observe pressure gauge of service station.

Note

- *Switching pressures and design of refrigerant circuit switches are vehicle-specific.*
- *Pressures must be measured at service connections; component locations of these connections are vehicle-specific. Refer to ⇒ Heating, Ventilation and Air Conditioning; Rep. Gr. 87 ; Diagnosis and Testing (vehicle-specific repair manual).*

Downloaded from www.Manualslib.com manuals search engine

- Specified values for the refrigerant circuit pressures, refer to ⇒ “4.4.7 Specified values Vehicles With Expansion Valve and Fluid Reservoir - Internally Regulated Compressor“, page 165 .

4.4.7 Specified values Vehicles With Expansion Valve and Fluid Reservoir - Internally Regulated Compressor

High-pressure side

Increasing from initial pressure (when connecting pressure gauges) to a maximum of 20 bar.

Low-pressure side

Decreasing from initial pressure (when connecting pressure gauges) to the value in the graph.

A - High pressure in bar

B - Low pressure in bar

C - Permissible tolerance range

Protected by copyright. Copying for private or commercial purposes, in part or in whole, is not permitted unless authorised by AUDI AG. AUDI AG does not guarantee or accept any liability with respect to the correctness of information in this document. Copyright by AUDI AG.

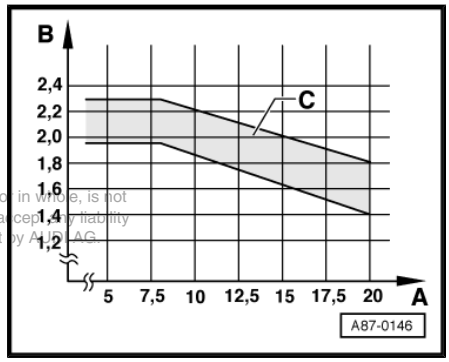

Possible Deviation From Specification	Possible Cause Of Fault	Corrective Action
• High pressure remains constant or increases only slightly (above pressure with engine stopped), • Low pressure quickly drops to value in graph or below • Required cooling output is not attained	Not enough refrigerant in circuit or expansion valve malfunctioning.	– Extract refrigerant from refrigerant circuit • If quantity of refrigerant extracted roughly corresponds to specified capacity: – Replace expansion valve – Charge the refrigerant circuit – Repeat test
• High pressure normal • Low pressure in line with value in graph • Required cooling output is not attained		• If quantity of refrigerant extracted is substantially less than specified capacity: – Localize leak with leak detector and eliminate – Charge the refrigerant circuit – Repeat test

Note

If no malfunction can be found and air conditioner operation is not OK when test is repeated, clean refrigerant circuit (flush using refrigerant R134a, refer to ⇒ “1.4.13 Refrigerant Circuit Flushing With Refrigerant R134a“, page 32 or blow through using compressed air and nitrogen, refer to ⇒ “1.4.12 Refrigerant Circuit Flushing With Compressed Air and Nitrogen “, page 29).

Downloaded from www.Manualslib.com manuals search engine

Possible Deviation From Specification	Possible Cause Of Fault	Corrective Action
• High pressure does not increase or only increases slightly above pressure with engine stopped. • Low pressure does not drop or drops only slightly. • Required cooling output is not attained	♦ The A/C compressor does not activate (the magnetic clutch). ♦ The A/C compressor is not being driven.	– Check the A/C compressor drive. Refer to ⇒ Heating, Ventilation and Air Conditioning; Rep. Gr. 87 ; Diagnosis and Testing .
	♦ Constriction or obstruction in refrigerant circuit (for example, inside the refrigerant line between the Service connection low pressure side and the A/C compressor).	– Clean refrigerant circuit (flush with refrigerant R134a, refer to ⇒ “1.4.13 Refrigerant Circuit Flushing With Refrigerant R134a“, page 32 or blow through with compressed air and nitrogen, refer to ⇒ “1.4.12 Refrigerant Circuit Flushing With Compressed Air and Nitrogen “, page 29). – Replace hose or pipe if kinked or constricted
	♦ A/C compressor faulty.	– Replace A/C compressor.

Protected by copyright. Copying for private or commercial purposes, in part or in whole, is not permitted unless authorised by AUDI AG. AUDI AG does not guarantee or accept any liability with respect to the correctness of information in this document. Copyright by AUDI AG.

Downloaded from www.Manualslib.com manuals search engine

Possible Deviation From Specification	Possible Cause Of Fault	Corrective Action
• High pressure increases above specification • Low pressure quickly drops to value in graph or below • Required cooling output is not attained	♦ Constriction or obstruction in refrigerant circuit ♦ Expansion valve malfunctioning	– Run hand over refrigerant circuit to check for differences in temperature • If difference in temperature is found at one component: – Replace hose or pipe if kinked or constricted – In the event of an obstruction, clean refrigerant circuit (flush with refrigerant R134a, refer to ⇒ "1.4.13 Refrigerant Circuit Flushing With Refrigerant R134a", page 32 or blow through with compressed air and nitrogen, refer to ⇒ "1.4.12 Refrigerant Circuit Flushing With Compressed Air and Nitrogen ", page 29 and replace expansion valve if necessary). • If no malfunction can be found: – Clean refrigerant circuit (flush with refrigerant R134a, refer to ⇒ "1.4.13 Refrigerant Circuit Flushing With Refrigerant R134a", page 32 or blow through with compressed air and nitrogen, refer to ⇒ "1.4.12 Refrigerant Circuit Flushing With Compressed Air and Nitrogen ", page 29 and replace expansion valve if necessary). – Repeat test

Protected by copyright. Copying for private or commercial purposes, in part or in whole, is not permitted unless authorised by AUDI AG. AUDI AG does not guarantee or accept any liability with respect to the correctness of information in this document. Copyright by AUDI AG.

Note

If operation is not OK after cleaning refrigerant circuit (flushing with R134a, refer to ⇒ "1.4.13 Refrigerant Circuit Flushing With Refrigerant R134a", page 32 or blowing through using compressed air and nitrogen, refer to ⇒ "1.4.12 Refrigerant Circuit Flushing With Compressed Air and Nitrogen ", page 29), expansion valve must be replaced.

Downloaded from www.Manualslib.com manuals search engine

Possible Deviation From Specification	Possible Cause Of Fault	Corrective Action
• High and low pressure normal at first • After some time, high pressure increases above specification and low pressure drops to value in graph or below • Required cooling output is no longer attained.	♦ Expansion valve malfunctioning ♦ Moisture in refrigerant circuit	– Replace fluid reservoir (with dryer) and evacuate refrigerant circuit for at least 3 hours (see notes) – Examine expansion valve for dirt or corrosion; replace if necessary – Clean refrigerant circuit (flush with refrigerant R134a, refer to ⇒ "1.4.13 Refrigerant Circuit Flushing With Refrigerant R134a", page 32 or blow through with compressed air and nitrogen, refer to ⇒ "1.4.12 Refrigerant Circuit Flushing With Compressed Air and Nitrogen ", page 29).
• High and low pressure normal at first • After lengthy operating period, low pressure drops excessively (evaporator ices up)		

Note

♦ *It is not initially necessary to clean the refrigerant circuit (flush using refrigerant R134a, refer to ⇒ "1.4.13 Refrigerant Circuit Flushing With Refrigerant R134a", page 32 or blow through using compressed air and nitrogen, refer to ⇒ "1.4.12 Refrigerant Circuit Flushing With Compressed Air and Nitrogen ", page 29) when this problem occurs since normally, there is only a small quantity of moisture in the system which can be removed by lengthy evacuation.*

♦ *If problem involving moisture in refrigerant circuit only occurs after a lengthy operating period or only infrequently (low pressure drops below specification and evaporator ices up), it is sufficient to replace the dryer (adjust quantity of refrigerant oil). Refrigerant circuit is then to be evacuated for at least 3 hours.*

Protected by copyright. Copying for private or commercial purposes, in part or in whole, is not permitted unless authorised by AUDI AG. AUDI AG does not guarantee or accept any liability with respect to the correctness of information in this document. Copyright by AUDI AG.

Downloaded from www.Manualslib.com manuals search engine

Possible Deviation From Specification	Possible Cause Of Fault	Corrective Action
• High pressure normal or too high • Low pressure too high (see graph) • Required cooling output is not attained. • A/C compressor noise (particularly after switch-on).	♦ To much refrigerant in the circuit. ♦ Expansion valve or A/C compressor faulty.	– Extract refrigerant from refrigerant circuit • If quantity of refrigerant extracted roughly corresponds to specified capacity: – Replace expansion valve – Charge the refrigerant circuit – Repeat test • If quantity of refrigerant extracted is substantially greater than specified capacity: – Charge the refrigerant circuit – Repeat test

Note

If air conditioner operation is not OK when test is repeated, install old expansion valve, clean refrigerant circuit (flush using refrigerant R134a, refer to ⇒ "1.4.13 Refrigerant Circuit Flushing With Refrigerant R134a", page 32 or blow through using compressed air and nitrogen, refer to ⇒ "1.4.12 Refrigerant Circuit Flushing With Compressed Air and Nitrogen ", page 29). Then replace A/C compressor and reservoir.

Possible Deviation From Specification	Possible Cause Of Fault	Corrective Action
• High pressure only increases slightly above pressure with engine stopped • Low pressure drops only slightly • Required cooling output is not attained	A/C compressor faulty.	– Clean refrigerant circuit (flush with refrigerant R134a, refer to ⇒ "1.4.13 Refrigerant Circuit Flushing With Refrigerant R134a", page 32 or blow through with compressed air and nitrogen, refer to ⇒ "1.4.12 Refrigerant Circuit Flushing With Compressed Air and Nitrogen ", page 29). – Replace A/C compressor and reservoir.

Possible Deviation From Specification	Possible Cause Of Fault	Corrective Action
• High pressure normal • Low pressure too low (see graph) • The required cooling performance is obtained	Expansion valve or A/C compressor faulty.	– Replace expansion valve – Charge the refrigerant circuit – Repeat test

Protected by copyright. Copying for private or commercial purposes, in part or in whole, is not permitted unless authorised by AUDI AG. AUDI AG does not guarantee or accept any liability with respect to the correctness of information in this document. Copyright by AUDI AG.

Downloaded from www.Manualslib.com manuals search engine

Note

- *If air conditioner operation is not OK when test is repeated, install old expansion valve, clean refrigerant circuit (flush using refrigerant R134a, refer to ⇒ "1.4.13 Refrigerant Circuit Flushing With Refrigerant R134a", page 32 or blow through using compressed air and nitrogen, refer to ⇒ "1.4.12 Refrigerant Circuit Flushing With Compressed Air and Nitrogen ", page 29). Then replace A/C compressor and reservoir.*
- *With this malfunction, evaporator may ice up although quantity of refrigerant in circuit is OK.*

Possible Deviation From Specification	Possible Cause Of Fault	Corrective Action
• High and low pressure normal • Required cooling output is not attained	To much refrigerant oil in the circuit.	– Discharge refrigerant circuit – Clean refrigerant circuit (flush with refrigerant R134a, refer to ⇒ "1.4.13 Refrigerant Circuit Flushing With Refrigerant R134a", page 32 or blow through with compressed air and nitrogen, refer to ⇒ "1.4.12 Refrigerant Circuit Flushing With Compressed Air and Nitrogen ", page 29).
• High and low pressure normal • A/C compressor noise (particularly after switch-on) • The required cooling performance is obtained		

Protected by copyright. Copying for private or commercial purposes, in part or in whole, is not permitted unless authorised by AUDI AG. AUDI AG does not guarantee or assume any liability with respect to the correctness of information in this document. Copyright by AUDI AG.

Note

- *Overfilling with refrigerant oil can occur if, for example, the compressor has been replaced without adjusting the quantity of refrigerant oil.*
- *If there is too much refrigerant oil in the circuit, the compressor must be drained and the accumulator must be replaced. After cleaning the refrigerant circuit (flushing with refrigerant R134a, refer to ⇒ "1.4.13 Refrigerant Circuit Flushing With Refrigerant R134a", page 32 or blowing through using compressed air and nitrogen, refer to ⇒ "1.4.12 Refrigerant Circuit Flushing With Compressed Air and Nitrogen ", page 29) the correct quantity of refrigerant oil is filled into the circuit, refer to ⇒ "3.4 Refrigerant Oil Capacities", page 119 .*

Downloaded from www.Manualslib.com manuals search engine

4.4.8 Checking Pressures On Vehicles with Restrictor, Reservoir and A/C Compressor Regulator Valve - Externally Regulated A/C Compressor

Note

- *Connecting service station. Refer to* *⇒ "2.4 A/C Service Station", page 79* .
- *Observe test requirements. Refer to* *⇒ "4.4 Pressures, Checking", page 153* .

– Refrigerant circuit, checking pressure with service station, refer to ⇒ "4.4.1 Checking Pressure with Service Station", page 153

The pressures with the ignition turned off meet the specifications.

– Start the engine.

– Set engine speed to 2000 RPM.

– Observe pressure gauge of service station.

Reproduction or distribution for commercial purposes, in part or in whole, is not permitted unless authorised by AUDI AG. AUDI AG does not guarantee or accept any liability with respect to the correctness of information in this document. Copyright by AUDI AG.

Note

- *The switch pressures for the A/C compressor regulator valve -N280- and the Radiator fan -V7- are vehicle specific.*
- *Pressures must be measured at service connections; component locations of these connections are vehicle-specific. Refer to ⇒ Heating, Ventilation and Air Conditioning; Rep. Gr. 87 ; Diagnosis and Testing (vehicle-specific repair manual).*
- Specified values for the refrigerant circuit pressures, refer to ⇒ "4.4.9 Specified Values On Vehicles with Restrictor, Reservoir and A/C Compressor Regulator Valve - Externally Regulated A/C Compressor", page 171 .

4.4.9 Specified Values On Vehicles with Restrictor, Reservoir and A/C Compressor Regulator Valve - Externally Regulated A/C Compressor

High-pressure side

Increasing from initial pressure (when connecting pressure gauges) to 20 bar.

Downloaded from www.Manualslib.com manuals search engine

Low-pressure side

Decreasing from initial pressure (when connecting pressure gauges) to the value in the graph.

A - Low pressure (measured at service connection) in bar absolute

B - Control current for A/C compressor regulator valve -N280- in amps

C - Permissible tolerance range

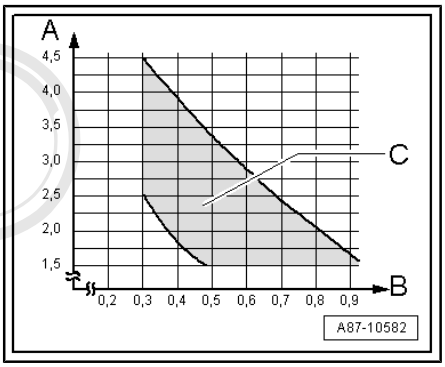

Protected by copyright. Copying for private or commercial purposes, in part or in whole, is not permitted unless authorised by AUDI AG. AUDI AG does not guarantee or accept any liability with respect to the correctness of information in this document. Copyright by AUDI AG.

Downloaded from www.Manualslib.com manuals search engine

Note

- *If high cooling output is needed (for example, the outside temperature is very high, the blower speed is set on high but the engine RPMs are low), then the A/C compressor will not bring the pressure on the low pressure side to the value specified in the diagram -C- (for example, for a certain time after turning on the A/C). Compressor is actuated with maximum specified control current, however delivery volume is no longer sufficient at this engine speed to reduce pressure on low-pressure side to value in graph. To check the A/C compressor control under these conditions, for example, the fresh air blower is controlled only with approximately 40% of the maximum voltage, check the pressures at a lower fresh air blower speed using Vehicle Diagnosis, Testing & Information System -VAS5051B- ("OBD" or "Guided Fault Finding for the A/C system") and ⇒ Heating, Ventilation and Air Conditioning; Rep. Gr. 87 ; Diagnosis and Testing (vehicle-specific repair manual).*
- *Under unfavorable conditions (very high ambient temperatures, high humidity), pressure on high-pressure side may increase to maximum 29 bar.*
- *Control current -B- is displayed in measured value block of Front A/C display control head -E87- or Climatronic Control Module -J255- .*
- *The measured pressure from the High pressure sensor -G65- or from the A/C pressure/temperature sensor -G395- inside the refrigerant circuit pressure is displayed in the measured values block for the Front A/C display control head -E87- and the Climatronic control module -J255- . Check using Vehicle Diagnosis, Testing & Information System -VAS5051B- ("OBD" or "Guided Fault Finding for the A/C System") and ⇒ Heating, Ventilation and Air Conditioning; Rep. Gr. 87 ; Diagnosis and Testing (vehicle-specific repair manual).*
- *Low pressure settles as a function of control current for A/C compressor regulator valve -N280- within compressor output range in tolerance range.*
- *Under unfavorable conditions (very high ambient temperatures, high humidity), compressor output may not always be sufficient to attain the specified value.*
- *If compressor capacity utilization is greater than 90%, pressure on low-pressure side may be in excess of tolerance range "C" shown in graph (compressor output no longer sufficient).*
- *The specified operating current for the regulator valve must be greater than 0.3 A in order to ensure reliable valve activation.*
- *At absolute pressure, 0 bar corresponds to absolute vacuum. Normal ambient pressure corresponds to 1 bar absolute pressure. 0 bar pressure corresponds to an absolute pressure of one bar on most pressure gauges (indicated by -1 bar below 0).*
- *In "maximum cooling output" setting , control current is regulated to approximately 0.65 (vehicle-specific up to 0.85A, displayed in measured value block) using Vehicle Diagnosis, Testing & Information System -VAS5051B- ("OBD" or "Guided Fault Finding for the A/C System") and ⇒ Heating, Ventilation and Air Conditioning; Rep. Gr. 87 ; Diagnosis and Testing or ⇒ A/C System; Rep. Gr. 87 (vehicle-specific repair manual).*

Protected by copyright. Copying for private or commercial purposes, in part or in whole, is not permitted unless authorised by AUDI AG. AUDI AG does not guarantee or accept any liability with respect to the correctness of information in this document. Copyright by AUDI AG.

Downloaded from www.Manualslib.com manuals search engine

Possible deviation from specification	Possible cause of fault	Corrective action
• High pressure remains constant or increases only slightly (above pressure with engine stopped), • Low pressure quickly drops to value in graph or below • Required cooling output is not attained	♦ Actuation of A/C compressor regulator valve -N280- malfunctioning ♦ Not enough refrigerant in refrigerant circuit	– Check the A/C compressor regulator valve activation. – Localize leak with leak detector and eliminate – Charge the refrigerant circuit
• High pressure normal • Low pressure too low (see graph) • Required cooling output is not attained		
• High pressure normal • Low pressure too low (see graph) • Required cooling output is not attained		

Note

If no fault is found with this complaint, clean refrigerant circuit (flush using refrigerant R134a, refer to ⇒ "1.4.13 Refrigerant Circuit Flushing With Refrigerant R134a", page 32 or blow through using compressed air and nitrogen, refer to ⇒ "1.4.12 Refrigerant Circuit Flushing With Compressed Air and Nitrogen ", page 29).

Possible deviation from specification	Possible cause of fault	Corrective action
• High pressure does not increase or only increases slightly above pressure with engine stopped. • Low pressure does not drop or drops only slightly. • Required cooling output is not attained	♦ The A/C compressor is not activated (A/C compressor regulator valve -N280-) ♦ The A/C compressor is not being driven.	– Check the A/C compressor drive. Refer to ⇒ Heating, Ventilation and Air Conditioning; Rep. Gr. 87 ; Diagnosis and Testing .

Protected by copyright. Copying for private or commercial purposes, in part or in whole, is not permitted unless authorised by AUDI AG. AUDI AG does not guarantee or accept any liability with respect to the correctness of information in this document. Copyright by AUDI AG.

Downloaded from www.Manualslib.com manuals search engine

Possible deviation from specification	Possible cause of fault	Corrective action
	♦ Constriction or obstruction in refrigerant circuit (for example, inside the refrigerant line between the Service connection “low pressure side“ and the A/C compressor).	– Clean refrigerant circuit (flush with refrigerant R134a, refer to ⇒ “1.4.13 Refrigerant Circuit Flushing With Refrigerant R134a“, page 32 or blow through with compressed air and nitrogen, refer to ⇒ “1.4.12 Refrigerant Circuit Flushing With Compressed Air and Nitrogen “, page 29). – Replace hose or pipe if kinked or constricted
	♦ A/C compressor faulty.	– Replace A/C compressor.

Possible deviation from specification	Possible cause of fault	Corrective action
• High pressure increases above specification • Low pressure quickly drops to value in graph or below • Required cooling output is not attained	♦ Actuation of A/C compressor regulator valve -N280- malfunctioning ♦ Constriction or obstruction in refrigerant circuit	– Check the A/C compressor regulator valve activation. – Run hand over refrigerant circuit to check for differences in temperature • If difference in temperature is found at one component: – Replace hose or pipe if kinked or constricted – In the event of an obstruction, flush refrigerant circuit with compressed air and nitrogen. • If no malfunction can be found: – Clean refrigerant circuit (flush with refrigerant R134a, refer to ⇒ “1.4.13 Refrigerant Circuit Flushing With Refrigerant R134a“, page 32 or blow through with compressed air and nitrogen, refer to ⇒ “1.4.12 Refrigerant Circuit Flushing With Compressed Air and Nitrogen “, page 29).

Protected by copyright. Copying for private or commercial purposes, in part or in whole, is not permitted unless authorised by AUDI AG. AUDI AG does not guarantee or accept any liability with respect to the correctness of information in this document. Copyright by AUDI AG.

Downloaded from www.Manualslib.com manuals search engine

Possible deviation from specification	Possible cause of fault	Corrective action
• High and low pressure normal at first, after some time high pressure increases above specification • Low pressure quickly drops to value in graph or below, • Required cooling output is no longer attained.	♦ Actuation of A/C compressor regulator valve -N280- malfunctioning ♦ Moisture in refrigerant circuit	– Check the A/C compressor regulator valve activation. – Replace accumulator (with dryer) and evacuate refrigerant circuit for at least 3 hours (see note) – Clean refrigerant circuit (flush with refrigerant R134a, refer to ⇒ "1.4.13 Refrigerant Circuit Flushing With Refrigerant R134a", page 32 or blow through with compressed air and nitrogen, refer to ⇒ "1.4.12 Refrigerant Circuit Flushing With Compressed Air and Nitrogen ", page 29)
• High and low pressure normal at first • After lengthy operating period, low pressure drops excessively (evaporator ices up)		

Note

♦ *It is not initially necessary to clean the refrigerant circuit (flush using refrigerant R134a, refer to ⇒ "1.4.13 Refrigerant Circuit Flushing With Refrigerant R134a", page 32 or blow through using compressed air and nitrogen, refer to ⇒ "1.4.12 Refrigerant Circuit Flushing With Compressed Air and Nitrogen ", page 29) when this problem occurs since normally there is only a small quantity of moisture in the system which can be removed by lengthy evacuation.*

♦ *If problem involving moisture in refrigerant circuit only occurs after a lengthy operating period or only infrequently (low pressure drops below specification and evaporator ices up), it is sufficient to replace the dryer (adjust quantity of refrigerant oil). Refrigerant circuit is then to be evacuated for at least 3 hours.*

♦ *Problem with Evaporator Vent Temperature Sensor -G263- can also cause icing-up of refrigerant circuit. If this problem is encountered, also pay attention to measured value of evaporator vent temperature sensor using Vehicle Diagnosis, Testing & Information System -VAS5051B- ("OBD" or "Guided Fault Finding for the A/C System" and ⇒ Heating, Ventilation and Air Conditioning; Rep. Gr. 87 ; Diagnosis and Testing (vehicle-specific repair manual).*

Copyright by AUDI AG. Reproduction for commercial purposes, in part or in whole, is not permitted without the prior consent of AUDI AG. AUDI AG does not guarantee or accept any liability with respect to the correctness of information in this document. Copyright by AUDI AG.

Downloaded from www.Manualslib.com manuals search engine

Possible deviation from specification	Possible cause of fault	Corrective action
• High pressure normal • Low pressure too low (see graph) • The required cooling performance is obtained	♦ Actuation of A/C compressor regulator valve -N280- malfunctioning ♦ A/C compressor faulty.	– Check the A/C compressor regulator valve activation. – Clean refrigerant circuit (flush with refrigerant R134a, refer to ⇒ "1.4.13 Refrigerant Circuit Flushing With Refrigerant R134a", page 32 or blow through with compressed air and nitrogen, refer to ⇒ "1.4.12 Refrigerant Circuit Flushing With Compressed Air and Nitrogen ", page 29) – Replace A/C compressor.

Note

Note the following if the malfunction is "high pressure normal, low pressure too low": the evaporator could be iced over even though there is enough refrigerant in the circuit. Check the measured values from the Evaporator vent temperature sensor -G263- and the A/C compressor regulator valve -N280- actuation. If the measured value from the evaporator vent temperature sensor is incorrect, the evaporator may ice up or cooling output is not attained. Check using Vehicle Diagnosis, Testing & Information System VAS5051B- ("OBD" or "Guided Fault Finding for the A/C System") and ⇒ Heating, Ventilation and Air Conditioning; Rep. Gr. 87 or ⇒ A/C System; Rep. Gr. 87 (vehicle-specific repair manual).

Copyright by AUDI AG. This document, in whole or in part, is not to be reproduced or made available to third parties without the express permission of AUDI AG. We do not accept any liability for the accuracy of the contents. © Copyright by AUDI AG.

Possible deviation from specification	Possible cause of fault	Corrective action
• High pressure normal or too high • Low pressure too high (see graph) • A/C compressor noise (particularly after switch-on) • Required cooling output is not attained	♦ Actuation of A/C compressor regulator valve -N280- malfunctioning ♦ To much refrigerant in the circuit.	– Check the A/C compressor regulator valve activation. – Extract refrigerant from refrigerant circuit • If quantity of refrigerant extracted roughly corresponds to specified capacity: – Replace A/C compressor. • If quantity of refrigerant extracted is substantially greater than specified capacity: – Charge the refrigerant circuit – Repeat test
• High and low pressure normal • Required cooling output is not attained	♦ Actuation of A/C compressor regulator valve -N280- malfunctioning ♦ To much refrigerant oil in the circuit.	– Check the A/C compressor regulator valve activation. – Discharge refrigerant circuit

Downloaded from www.Manualslib.com manuals search engine

Possible deviation from specification	Possible cause of fault	Corrective action
• High and low pressure normal. • A/C compressor noise (particularly after switch-on). • The required cooling performance is obtained		– Clean refrigerant circuit (flush with refrigerant R134a, refer to ⇒ "1.4.13 Refrigerant Circuit Flushing With Refrigerant R134a", page 32 or blow through with compressed air and nitrogen, refer to ⇒ "1.4.12 Refrigerant Circuit Flushing With Compressed Air and Nitrogen ", page 29).

Note

- *Overfilling with refrigerant oil can occur if, for example, the compressor has been replaced without adjusting the quantity of refrigerant oil.*
- *If there is too much refrigerant oil in the circuit, the compressor must be drained and the accumulator must be replaced. After cleaning the refrigerant circuit (flushing with refrigerant R134a, refer to ⇒ "1.4.13 Refrigerant Circuit Flushing With Refrigerant R134a", page 32 or blowing through using compressed air and nitrogen, refer to ⇒ "1.4.12 Refrigerant Circuit Flushing With Compressed Air and Nitrogen ", page 29) the correct quantity of refrigerant oil is filled into the circuit, refer to ⇒ "3.4 Refrigerant Oil Capacities", page 119 .*

4.4.10 Checking Pressures On Vehicles with Restrictor, Accumulator and A/C Compressor Regulator Valve - Externally Regulated Compressor

Note

- *Connecting service station. Refer to ⇒ "2.4 A/C Service Station", page 79 .*
- *Observe test requirements. Refer to ⇒ "4.4 Pressures, Checking", page 153 .*
- *If a malfunction occurs at only one evaporator in vehicles with two evaporators, also check pressures in the refrigerant circuit, are these OK? Check line connection between evaporator in question and exit of line connection at distribution point of refrigerant lines (for constriction). If no malfunction can be detected, discharge refrigerant circuit and charge it with the specified refrigerant quantity. Then check pressures and cooling performance of A/C system again; if the malfunction occurs again, replace the expansion valve which is prematurely switched by the malfunctioning evaporator. Refer to ⇒ Heating, Ventilation and Air Conditioning; Rep. Gr. 87 ; Diagnosis and Testing (vehicle-specific repair manual).*

Protected by copyright. Copying for private or commercial purposes, in part or in whole, is not permitted unless authorised by AUDI AG. AUDI AG does not guarantee or accept any liability with respect to the correctness of information in this document. Copyright by AUDI AG.

– Refrigerant circuit, checking pressure with service station, refer to ⇒ "4.4.1 Checking Pressure with Service Station", page 153 .

Downloaded from www.Manualslib.com manuals search engine

The pressures with the ignition turned off meet the specifications.

– Start the engine.
– Set engine speed to 2000 RPM.
– Observe pressure gauge of service station.

Note

- *Switching pressures for actuation of A/C compressor regulator valve -N280- and Radiator fan -V7- are vehicle-specific.*
- *Pressures must be measured at service connections; component locations of these connections are vehicle-specific. Refer to ⇒ Heating, Ventilation and Air Conditioning; Rep. Gr. 87 ; Diagnosis and Testing (vehicle-specific repair manual).*
- Specified values for the refrigerant circuit pressures, refer to ⇒ "4.4.11 Specified Values On Vehicles with Restrictor, Accumulator and A/C Compressor Regulator Valve - Externally Regulated Compressor", page 179 .

4.4.11 Specified Values On Vehicles with Restrictor, Accumulator and A/C Compressor Regulator Valve - Externally Regulated Compressor

High-pressure side

Increasing from initial pressure (when connecting pressure gauges) to a maximum of 20 bar.

Protected by copyright. Copying for private or commercial purposes, in part or in whole, is not permitted unless authorised by AUDI AG. AUDI AG does not guarantee or accept any liability with respect to the correctness of information in this document. Copyright by AUDI AG.

Downloaded from www.Manualslib.com manuals search engine

Low pressure

Decreasing from initial pressure (when connecting pressure gauges) to the value in the graph.

A - Low pressure (measured at service connection) in bar absolute

B - Control current for A/C compressor regulator valve -N280- in amps

C - Permissible tolerance range (applicable to compressor capacity utilization of 10..0.90 %)

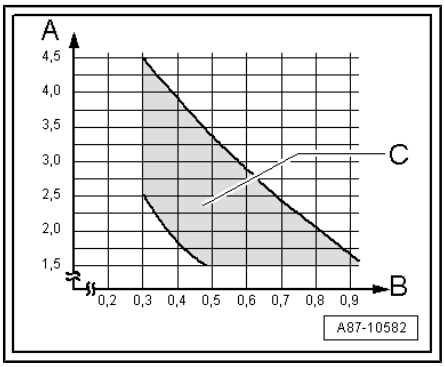

Protected by copyright. Copying for private or commercial purposes, in part or in whole, is not permitted unless authorised by AUDI AG. AUDI AG does not guarantee or accept any liability with respect to the correctness of information in this document. Copyright by AUDI AG.

Downloaded from www.Manualslib.com manuals search engine

Note

- *If high cooling output is needed (for example, the outside temperature is very high, the blower speed it set on high but the engine RPMs are low), then the A/C compressor will not bring the pressure on the low pressure side to the value specified in the diagram -C- (for example, for a certain time after turning on the A/C). Compressor is actuated with maximum specified control current, however delivery volume is no longer sufficient at this engine speed to reduce pressure on low-pressure side to value in graph. To check the A/C compressor control under these conditions, for example, the fresh air blower is controlled only with approximately 40% of the maximum voltage, check the pressures at a lower fresh air blower speed. Check using Vehicle Diagnosis, Testing & Information System -VAS5051B- ("OBD" or "Guided Fault Finding for the A/C system") and ⇒ Heating, Ventilation and Air Conditioning; Rep. Gr. 87 ; Diagnosis and Testing (vehicle-specific repair manual).*
- *Under unfavorable conditions (very high ambient temperatures, high humidity), pressure on high-pressure side may increase to maximum 29 bar.*
- *Control current -B- is displayed in measured value block of Front A/C display control head -E87- , Climatronic Control Module -J255- .*
- *High pressure measured by High Pressure Sensor -G65- or A/C Pressure/temperature Sensor -G395- is displayed in measured value block of Front A/C Control Head -E87- , Climatronic Control Module -J255- .*
- *Low pressure settles depending on control current for A/C Compressor Regulator Valve -N280- and control characteristic of expansion valve within compressor output range in tolerance range.*
- *Under unfavorable conditions (very high ambient temperatures, high humidity), compressor output may not always be sufficient to attain the specified value.*
- *If compressor capacity utilization is greater than 90%, pressure on low-pressure side may be in excess of tolerance range C shown in graph (compressor output no longer sufficient).*
- *The specified operating current for the A/C Compressor Regulator Valve -N280- must be greater than 0.3 A in order to ensure reliable regulator valve actuation.*
- *In "maximum cooling output" setting, control current for A/C Compressor Regulator Valve -N280- is regulated to approximately 0.65 A (up to 0.85 A). This measured value is vehicle-specific and displayed in measured value block.*
- *At absolute pressure, 0 bar corresponds to absolute vacuum. Normal ambient pressure corresponds to 1 bar absolute pressure. On the scales of most pressure gauges, 0 bar corresponds to an absolute pressure of 1 bar (can be seen from -1 bar mark below 0). Check using Vehicle Diagnosis, Testing & Information System -VAS5051B- ("OBD" or "Guided Fault Finding for the A/C System") and ⇒ Heating, Ventilation and Air Conditioning; Rep. Gr. 87 ; Diagnosis and Testing (vehicle-specific repair manual).*

Protected by Copyright. Copying for private or commercial purposes, in part or in whole, is not permitted unless authorised by AUDI AG. AUDI AG does not guarantee or assume any liability with respect to the correctness of information in this document. Copyright by AUDI AG.

Downloaded from www.Manualslib.com manuals search engine

Possible deviation from specification	Possible cause of fault	Corrective action
• High pressure remains constant or increases only slightly (above pressure with engine stopped), • Low pressure quickly drops to value in graph or below • Required cooling output is not attained	♦ Actuation of A/C compressor regulator valve -N280- malfunctioning ♦ Not enough refrigerant in refrigerant circuit ♦ Expansion valve malfunctioning	– Check A/C compressor regulator valve activation. – Extract refrigerant from refrigerant circuit • If quantity of refrigerant extracted is substantially less than specified capacity: – Localize leak with leak detector and eliminate – Charge the refrigerant circuit – Repeat test
• High pressure normal • Low pressure in line with value in graph • Required cooling output is not attained		
• High pressure normal • Low pressure too low (see graph) • Required cooling output is not attained		• If quantity of refrigerant extracted roughly corresponds to specified capacity: – Replace expansion valve – Charge the refrigerant circuit – Repeat test

Protected by copyright. Copying for private or commercial purposes, in part or in whole, is not permitted unless authorised by AUDI AG. AUDI AG does not guarantee or accept any liability with respect to the correctness of information in this document. Copyright by AUDI AG.

Downloaded from www.Manualslib.com manuals search engine

Note

- *If no fault is found with this complaint, clean refrigerant circuit (flush using refrigerant R134a, refer to ⇒ "1.4.13 Refrigerant Circuit Flushing With Refrigerant R134a", page 32 or blow through using compressed air and nitrogen, refer to ⇒ "1.4.12 Refrigerant Circuit Flushing With Compressed Air and Nitrogen ", page 29).*
- *Check the measured values from the Evaporator vent temperature sensor -G263- and the A/C compressor regulator valve control. If measured value of Evaporator vent temperature sensor is not OK, evaporator may ice up or cooling output is not attained.*
- *If air conditioner operation is not OK when test is repeated after replacing expansion valve, install old expansion valve, clean refrigerant circuit (flush using refrigerant R134a, refer to ⇒ "1.4.13 Refrigerant Circuit Flushing With Refrigerant R134a", page 32 or blow through using compressed air and nitrogen, refer to ⇒ "1.4.12 Refrigerant Circuit Flushing With Compressed Air and Nitrogen ", page 29). Then replace A/C compressor and reservoir.*
- *With this malfunction, evaporator may ice up although quantity of refrigerant in circuit is OK.*
- *If expansion valve is malfunctioning (permanently closed or does not open sufficiently), A/C compressor regulator valve is actuated to maximum output and low pressure drops to value in graph or below (compressor draws off refrigerant from low-pressure side). As refrigerant cannot flow via expansion valve, cooling output is not attained, high pressure may also not increase or only increase slightly due to the absence of energy. Check using Vehicle Diagnosis, Testing & Information System -VAS5051B- ("OBD" or "Guided Fault Finding for the A/C System") and ⇒ Heating, Ventilation and Air Conditioning; Rep. Gr. 87 ; Diagnosis and Testing (vehicle-specific repair manual).*

Possible deviation from specification	Possible cause of fault	Corrective action
• High pressure does not increase or only increases slightly above pressure with engine stopped. • Low pressure does not drop or drops only slightly. • Required cooling output is not attained	♦ The A/C compressor is not activated (A/C compressor regulator valve -N280-) ♦ The A/C compressor is not being driven.	– Check the A/C compressor drive. Refer to ⇒ Heating, Ventilation and Air Conditioning; Rep. Gr. 87 ; Diagnosis and Testing .

Protected by copyright. Copying for private or commercial purposes, in part or in whole, is not permitted unless authorised by AUDI AG. AUDI AG does not guarantee or accept any liability with respect to the correctness of information in this document. Copyright by AUDI AG.

Downloaded from www.Manualslib.com manuals search engine

Possible deviation from specification	Possible cause of fault	Corrective action
	♦ Constriction or obstruction in refrigerant circuit (for example, inside the refrigerant line between the Service connection, low pressure side, and the A/C compressor).	– Clean refrigerant circuit (flush with refrigerant R134a, refer to ⇒ "1.4.13 Refrigerant Circuit Flushing With Refrigerant R134a", page 32 or blow through with compressed air and nitrogen, refer to ⇒ "1.4.12 Refrigerant Circuit Flushing With Compressed Air and Nitrogen ", page 29). – Replace hose or pipe if kinked or constricted
	♦ A/C compressor faulty.	– Replace A/C compressor.

Protected by copyright. Copying for private or commercial purposes, in part or in whole, is not permitted unless authorised by AUDI AG. AUDI AG does not guarantee or accept any liability with respect to the correctness of information in this document. Copyright by AUDI AG.

Note

- *Make sure the A/C compressor (the A/C compressor shaft) is actually being driven by the belt pulley/drive unit. Refer to ⇒ Heating, Ventilation and Air Conditioning; Rep. Gr. 87 ; Diagnosis and Testing (vehicle-specific repair manual).*
- *As of MY 12, certain engines and A/C compressors that in addition to the A/C compressor regulator valve, have an A/C clutch -N25- attached to the belt pulley. Make sure the A/C clutch really is being actuated and the A/C compressor (A/C compressor shaft) is being driven by the belt pulley. Refer to ⇒ Heating, Ventilation and Air Conditioning; Rep. Gr. 87 ; Diagnosis and Testing (vehicle-specific repair manual) and to the Electronic Parts Catalog (ETKA).*

Downloaded from www.Manualslib.com manuals search engine

Possible deviation from specification	Possible cause of fault	Corrective action
• High pressure increases above specification • Low pressure quickly drops to value in graph • Required cooling output is not attained	♦ Actuation of A/C compressor regulator valve -N280- malfunctioning ♦ Constriction or obstruction in refrigerant circuit ♦ Expansion valve malfunctioning	– Check the A/C compressor regulator valve activation. – Run hand over refrigerant circuit to check for differences in temperature • If difference in temperature is found at one component: – Replace hose or pipe if kinked or constricted – In the event of an obstruction, clean refrigerant circuit (flush with refrigerant R134a, refer to ⇒ “1.4.13 Refrigerant Circuit Flushing With Refrigerant R134a“, page 32 or blow through with compressed air and nitrogen, refer to ⇒ “1.4.12 Refrigerant Circuit Flushing With Compressed Air and Nitrogen “, page 29). – Charge the refrigerant circuit – Repeat test • If no malfunction can be found: – Clean refrigerant circuit (flush with refrigerant R134a, refer to ⇒ “1.4.13 Refrigerant Circuit Flushing With Refrigerant R134a“, page 32 or blow through with compressed air and nitrogen, refer to ⇒ “1.4.12 Refrigerant Circuit Flushing With Compressed Air and Nitrogen “, page 29) – Charge the refrigerant circuit – Repeat test, if function is not OK: – Replace expansion valve and receiver

Protected by copyright. Copying for private or commercial purposes, in part or in whole, is not permitted unless authorised by AUDI AG. AUDI AG does not guarantee or accept any liability with respect to the correctness of information in this document. Copyright by AUDI AG.

Downloaded from www.Manualslib.com manuals search engine

Note

- *If the function of the air conditioning system is not OK when the test is repeated, replace expansion valve and receiver.*
- *With this malfunction, evaporator may ice up although quantity of refrigerant in circuit is OK.*
- *If expansion valve is malfunctioning (permanently closed or does not open sufficiently), A/C compressor regulator valve -N280- is actuated to maximum output and low pressure drops to value in graph or below (compressor draws off refrigerant from low-pressure side). As refrigerant cannot flow via expansion valve, cooling output is not attained, high pressure may also not increase or only increase slightly due to the absence of energy. Check using Vehicle Diagnosis, Testing & Info. System -VAS5051B- ("OBD" or "Guided Fault Finding for the A/C System") and ⇒ Heating, Ventilation and Air Conditioning; Rep. Gr. 87 ; Diagnosis and Testing (vehicle-specific repair manual).*
- *If there is too much refrigerant oil in the circuit, the compressor must be drained and the accumulator must be replaced. After cleaning the refrigerant circuit (flushing with refrigerant R134a, refer to ⇒ "1.4.13 Refrigerant Circuit Flushing With Refrigerant R134a", page 32 or blowing through using compressed air and nitrogen, refer to ⇒ "1.4.12 Refrigerant Circuit Flushing With Compressed Air and Nitrogen ", page 29) the correct quantity of refrigerant oil is filled into the circuit, refer to ⇒ "3.4 Refrigerant Oil Capacities", page 119 .*

Possible deviation from specification	Possible cause of fault	Corrective action
• High and low pressure normal at first After some time, • high pressure increases above specification • Low pressure quickly drops to value in graph or below, • Required cooling output is no longer attained.	♦ Actuation of A/C compressor regulator valve -N280- malfunctioning ♦ Moisture in refrigerant circuit	– Check the A/C compressor regulator valve activation. – Clean refrigerant circuit (flush with refrigerant R134a, refer to ⇒ "1.4.13 Refrigerant Circuit Flushing With Refrigerant R134a", page 32 or blow through with compressed air and nitrogen, refer to ⇒ "1.4.12 Refrigerant Circuit Flushing With Compressed Air and Nitrogen ", page 29).
• High and low pressure normal at first • After lengthy driving time, low pressure drops excessively (evaporator ices up)		– Replace receiver with dryer. – Evacuate refrigerant circuit for at least 3 hours. – Charge the refrigerant circuit – Repeat test

Protected by copyright. Copying for private or commercial purposes, in part or in whole, is not permitted unless authorised by AUDI AG. AUDI AG does not guarantee or accept any liability with respect to the correctness of information in this document. Copyright by AUDI AG.

Downloaded from www.Manualslib.com manuals search engine

Note

- *It is not initially necessary to clean the refrigerant circuit (flush using refrigerant R134a, refer to ⇒ "1.4.13 Refrigerant Circuit Flushing With Refrigerant R134a", page 32 or blow through using compressed air and nitrogen, refer to ⇒ "1.4.12 Refrigerant Circuit Flushing With Compressed Air and Nitrogen ", page 29) when this problem occurs since normally there is only a small quantity of moisture in the system which can be removed by lengthy evacuation.*
- *If problem involving moisture in refrigerant circuit only occurs after a lengthy operating period or only infrequently (low pressure drops below specification and evaporator ices up), it is sufficient to replace the dryer installed in receiver (adjust quantity of refrigerant oil). Refrigerant circuit is then to be evacuated for at least 3 hours.*
- *With this malfunction, evaporator may ice up although quantity of refrigerant in circuit is OK.*
- *Problem with Evaporator Vent Temperature Sensor -G263- can also cause icing-up of refrigerant circuit. If this problem is encountered, also pay attention to measured value of evaporator vent temperature sensor using Vehicle Diagnosis, Testing & Information System -VAS5051B- ("OBD" or "Guided Fault Finding for the A/C System" and ⇒ Heating, Ventilation and Air Conditioning; Rep. Gr. 87 ; Diagnosis and Testing (vehicle-specific repair manual).*

Possible deviation from specification	Possible cause of fault	Corrective action
• High pressure normal • Low pressure too low (see graph) • The required cooling performance is obtained	♦ Actuation of A/C compressor regulator valve -N280- malfunctioning ♦ Expansion valve or A/C compressor faulty. ♦ A/C compressor faulty.	– Check the A/C compressor regulator valve activation. – Clean refrigerant circuit (flush with refrigerant R134a, refer to ⇒ "1.4.13 Refrigerant Circuit Flushing With Refrigerant R134a", page 32 or blow through with compressed air and nitrogen, refer to ⇒ "1.4.12 Refrigerant Circuit Flushing With Compressed Air and Nitrogen ", page 29) (not always necessary, refer to notes). – Replace expansion valve and receiver – Charge the refrigerant circuit – Repeat test, if function is not OK: – Replace A/C compressor. – Charge the refrigerant circuit – Repeat test

Protected by copyright. Copying for private or commercial purposes, in part or in whole, is not permitted unless authorised by AUDI AG. AUDI AG does not guarantee or accept any liability with respect to the correctness of information in this document. Copyright by AUDI AG.

Downloaded from www.Manualslib.com manuals search engine

Note

- *For the malfunction "high pressure normal, low pressure too low" With this malfunction, evaporator may ice up, although quantity of refrigerant in circuit is OK.*
- *If the problem is with the A/C compressor regulator valve -N280- (regulator valve is not actuated but A/C compressor operates nevertheless), refrigerant circuit does not have to be cleaned (flush with refrigerant R134a, refer to ⇒ "1.4.13 Refrigerant Circuit Flushing With Refrigerant R134a", page 32 or blow through using compressed air and nitrogen, refer to ⇒ "1.4.12 Refrigerant Circuit Flushing With Compressed Air and Nitrogen ", page 29). In this case, it is sufficient to replace the A/C compressor (observe quantity of refrigerant oil in A/C compressor).*
- *If expansion valve is malfunctioning (permanently closed or does not open sufficiently), A/C compressor regulator valve is actuated to maximum output and low pressure drops to value in graph or below (compressor draws off refrigerant from low-pressure side). As however refrigerant cannot flow via expansion valve, cooling output is not attained and high pressure may also not increase or only increase slightly due to the absence of energy conversion.*
- *Check the measured values from the Evaporator vent temperature sensor -G263- and the A/C compressor regulator valve control. If the measured value from the evaporator vent temperature sensor is incorrect, the evaporator may ice up or cooling output is not attained. Check using Vehicle Diagnosis, Testing & Information System -VAS5051B- ("OBD" or "Guided Fault Finding for the A/C System") and ⇒ Heating, Ventilation and Air Conditioning; Rep. Gr. 87 ; Diagnosis and Testing (vehicle-specific repair manual).*

Possible deviation from specification	Possible cause of fault	Corrective action
• High pressure normal or too high • Low pressure too high (see graph) • A/C compressor noise (particularly after switch-on) • The required cooling performance is obtained	♦ Actuation of A/C compressor regulator valve -N280- malfunctioning ♦ To much refrigerant in the circuit. ♦ Expansion valve malfunctioning ♦ A/C compressor faulty.	– Check the A/C compressor regulator valve activation. – Extract refrigerant from refrigerant circuit • If quantity of refrigerant extracted roughly corresponds to specified capacity: – Replace expansion valve and receiver – Charge the refrigerant circuit – Repeat test, if function is not OK: – Replace A/C compressor. • If quantity of refrigerant extracted is substantially greater than specified capacity: – Charge the refrigerant circuit – Repeat test

Protected by copyright. Copying for private or commercial purposes, in part or in whole, is not permitted unless authorised by AUDI AG. AUDI AG does not guarantee or accept any liability with respect to the correctness of information in this document. Copyright by AUDI AG.

Downloaded from www.Manualslib.com manuals search engine

Note

- *This fault may also be caused by too much refrigerant oil in the circuit. Overfilling with refrigerant oil can occur if, for example, the compressor has been replaced without adjusting the quantity of refrigerant oil.*
- *If expansion valve is malfunctioning (permanently closed or does not open sufficiently), A/C compressor regulator valve is actuated to maximum output and low pressure drops to value in graph or below (compressor draws off refrigerant from low-pressure side). As however refrigerant cannot flow via expansion valve, cooling output is not attained, high pressure may also not increase or only increase slightly due to the absence of energy. Check using Vehicle Diagnosis, Testing & Information System -VAS5051B- ("OBD" or "Guided Fault Finding for the A/C System") and ⇒ Heating, Ventilation and Air Conditioning; Rep. Gr. 87 ; Diagnosis and Testing (vehicle-specific repair manual).*

Possible deviation from specification	Possible cause of fault	Corrective action
• High and low pressure normal • The required cooling performance is obtained	♦ Actuation of A/C compressor regulator valve -N280- malfunctioning ♦ To much refrigerant in the circuit. ♦ Expansion valve malfunctioning	– Check the A/C compressor regulator valve activation. – Discharge refrigerant circuit – Clean refrigerant circuit (flush with refrigerant R134a, refer to ⇒ "1.4.13 Refrigerant Circuit Flushing With Refrigerant R134a", page 32 or blow through with compressed air and nitrogen, refer to ⇒ "1.4.12 Refrigerant Circuit Flushing With Compressed Air and Nitrogen ", page 29).
• High and low pressure normal • A/C compressor noise (particularly after switch-on) • The required cooling performance is obtained		– Fill in correct quantity of refrigerant oil into circuit (see note). – Charge the refrigerant circuit – Repeat test, if function is not OK: – Replace expansion valve – Charge the refrigerant circuit – Repeat test

Protected by copyright. Copying for private or commercial purposes, in part or in whole, is not permitted unless authorised by AUDI AG. AUDI AG does not guarantee or accept any liability with respect to the correctness of information in this document. Copyright by AUDI AG.

Downloaded from www.Manualslib.com manuals search engine

Note

- *Overfilling with refrigerant oil can occur if, for example, the compressor has been replaced without adjusting the quantity of refrigerant oil.*
- *If expansion valve is malfunctioning (permanently open), evaporator temperature is no longer regulated such that only refrigerant in gaseous state exits from the evaporator. Under certain usage conditions, liquid droplets may then be drawn in by the compressor and cause noise (liquid cannot be compressed).*
- *If there is too much refrigerant oil in the circuit, the compressor must be drained and the accumulator must be replaced. After cleaning the refrigerant circuit (flushing with refrigerant R134a, refer to*
  ⇒ "1.4.13 Refrigerant Circuit Flushing With Refrigerant R134a", page 32 or blowing through using compressed air and nitrogen, refer to
  ⇒ "1.4.12 Refrigerant Circuit Flushing With Compressed Air and Nitrogen ", page 29) the correct quantity of refrigerant oil is filled into the circuit, refer to
  ⇒ "3.4 Refrigerant Oil Capacities", page 119 .

Protected by copyright. Copying for private or commercial purposes, in part or in whole, is not permitted unless authorised by AUDI AG. AUDI AG does not guarantee or accept any liability with respect to the correctness of information in this document. Copyright by AUDI AG.

Downloaded from www.Manualslib.com manuals search engine

5 Removal and Installation

⇒ "5.1 Leaking or Damaged Components Except A/C Compressor, Accumulator or Receiver - Circuit Empty of Refrigerant", page 191

⇒ "5.2 Leaking or Damaged Components Except A/C Compressor, Accumulator or Receiver - Circuit Contains Refrigerant", page 193

⇒ "5.3 Compressor, Replacing Without Flushing Refrigerant Circuit", page 193

⇒ "5.4 Compressor, Replacing Due to Leakage Or Internal Damage", page 194

⇒ "5.5 Receiver or Accumulator and Restrictor, Replacing After Cleaning Refrigerant Circuit", page 195

⇒ "5.6 Receiver or Accumulator, Replacing Without Flushing Refrigerant Circuit", page 196

⇒ "5.7 Dryer Cartridge and Dryer Bag, Replacing Without Flushing Refrigerant Circuit", page 197

Copyright by AUDI AG. Any use for commercial purposes, in part or in whole, is not permitted unless authorised by AUDI AG. AUDI AG does not guarantee or accept any liability with respect to the correctness of information in this document. Copyright by AUDI AG.

5.1 Leaking or Damaged Components Except A/C Compressor, Accumulator or Receiver - Circuit Empty of Refrigerant

The refrigerant circuit was completely empty (for example with larger leak or cracked hose)

Note

- *In the event of only a minor leak with slow escape of refrigerant (for example at a small leakage point), the amount of refrigerant oil lost and the amount of moisture penetrating is not sufficient to influence operation of the air conditioner.*
- *The operations marked * are only to be implemented in case of a major leak (for example following an accident).*

– Remove malfunctioning component.

– Remove A/C compressor.*

Downloaded from www.Manualslib.com manuals search engine

– Remove the oil drain plug -B- / -D- from the A/C compressor -A-.*

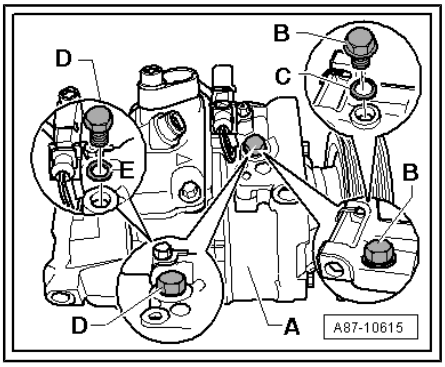

Note

- *There are different versions of the oil drain plug -B- / -D- and gasket -C- / -E- (depending on who is the A/C compressor manufacturer).*
- *Pay close attention to the tightening specification for the oil drain plug -B- / -D- (depending on the A/C compressor manufacturer and the oil drain plug version). Refer to ⇒ Heating, Ventilation and Air Conditioning; Rep. Gr. 87 ; Specifications (vehicle-specific repair manual).*
- *A/C compressors made by Denso and Nippondenso have an oil drain plug -D- with a gasket already installed -E-; always replace. Refer to Electronic Parts Catalog (ETKA).*
- *A/C compressors made by Sanden or Zexel have an oil drain plug -D- with an O-ring already installed -E-; always replace. Refer to Electronic Parts Catalog (ETKA).*
- *To accelerate drainage of refrigerant oil, rotate compressor, for example, by way of clutch plate of A/C clutch for example.*
- *Drain the old refrigerant oil from the A/C compressor* (for disposing, refer to Audi-ServiceNet, HSO Environment).*

Note

- *Then fill A/C compressor with quantity of fresh refrigerant oil corresponding to quantity of refrigerant oil in replacement A/C compressor. Refer to*
  *⇒ "3.4 Refrigerant Oil Capacities", page 119 .**
- *Use different refrigerant oils and quantities for the various compressors. Refer to*
  ⇒ "3.4 Refrigerant Oil Capacities", page 119 .
- *To ensure compressor lubrication on start-up, at least 80 cm^3 of refrigerant oil must be poured into the compressor, the remainder can be added for example to the new reservoir or receiver. Refer to*
  ⇒ "3.4 Refrigerant Oil Capacities", page 119 .
- *If dirt has penetrated into the compressor with the refrigerant circuit open (for example after an accident), compressor is to be replaced.*
- *Clean refrigerant circuit (flush with refrigerant R134a, refer to*
  ⇒ "1.4.13 Refrigerant Circuit Flushing With Refrigerant R134a", page 32 or blow through with compressed air and nitrogen, refer to
  *⇒ "1.4.12 Refrigerant Circuit Flushing With Compressed Air and Nitrogen ", page 29)**

– Replace dryer cartridge, receiver* or accumulator* and restrictor.

– Assemble, evacuate and recharge refrigerant circuit.

Protected by copyright. Copying for private or commercial purposes, in part or in whole, is not permitted unless authorised by AUDI AG. AUDI AG does not guarantee or accept any liability with respect to the correctness of information in this document. Copyright by AUDI AG.

Downloaded from www.Manualslib.com manuals search engine

5.2 Leaking or Damaged Components Except A/C Compressor, Accumulator or Receiver - Circuit Contains Refrigerant

Refrigerant circuit still contains refrigerant (for example, with minor leak)

- Discharge refrigerant circuit
- Remove malfunctioning component, flush with compressed air, collect escaping refrigerant oil.
- The new component is to be filled with the amount of refrigerant oil flushed out (positive 20 cm^3 for evaporator, positive 10 cm^3 for condenser, refrigerant pipes and refrigerant hoses) as fresh refrigerant oil fill.

Note

Workshop-specific instructions, refer to Audi ServiceNet, HSO Environment.

- Replace restrictor.
- Assemble, evacuate and charge refrigerant circuit.

5.3 Compressor, Replacing Without Flushing Refrigerant Circuit

Note

Cleaning refrigerant circuit means flushing it with refrigerant R134a, refer to
⇒ "1.4.13 Refrigerant Circuit Flushing With Refrigerant R134a", page 32 *or blowing through with compressed air and nitrogen, refer to*
⇒ "1.4.12 Refrigerant Circuit Flushing With Compressed Air and Nitrogen ", page 29).

Protected by copyright. Copying for private or commercial purposes, in part or in whole, is not permitted unless authorised by AUDI AG. AUDI AG does not guarantee or accept any liability with respect to the correctness of information in this document. Copyright by AUDI AG.

For example, in the event of external damage following an accident

- Discharge refrigerant circuit
- Remove A/C compressor.
- Remove oil drain plug from A/C compressor.

Note

Different versions of the oil drain plug and its seal (it can be either an O-ring or a gasket; always replace). Refer to
⇒ "5.1 Leaking or Damaged Components Except A/C Compressor, Accumulator or Receiver - Circuit Empty of Refrigerant", page 191 *and to the Electronic Parts Catalog (ETKA).*

- To accelerate drainage of refrigerant oil, rotate compressor, for example, by way of clutch plate of A/C clutch for example.
- Drain the old refrigerant oil from the A/C compressor* (for disposing, refer to Audi-ServiceNet, HSO Environment).
- Remove oil drain plug from replacement A/C compressor, pour out refrigerant oil and only add a quantity of fresh refrig-

Downloaded from www.Manualslib.com manuals search engine

erant oil equal to the amount poured out of the malfunctioning A/C compressor.

Note

- *If, for example, 70 cm³ of refrigerant oil has been poured out of the defective A/C compressor and 220 cm³ out of the replacement A/C compressor (a small quantity of refrigerant oil remains in the A/C compressor). Fill the A/C compressor to be installed with 70 cm³ of refrigerant oil (use can be made of oil poured out of replacement A/C compressor).*
- *Use different refrigerant oils and quantities for the various compressors. Refer to ⇒ "3.4 Refrigerant Oil Capacities", page 119 .*
- *If a greater quantity of refrigerant oil (more than approximately 80 cm³) has been poured out of the malfunctioning compressor, the remaining refrigerant oil can also be added to the evaporator or reservoir/receiver. Refer to ⇒ "3.4 Refrigerant Oil Capacities", page 119 .*

Reproduction or duplication of this document or any extracts thereof for commercial purposes, in part or in whole, is not permitted without the express consent of AUDI AG. AUDI AG does not guarantee or accept any liability with respect to the correctness of information in this document. Copyright by AUDI AG.

All

- Replace the restrictor (only if there is on in this refrigerant circuit).
- Assemble, evacuate and charge refrigerant circuit.

5.4 Compressor, Replacing Due to Leakage Or Internal Damage

For example, because of noise or no A/C compressor output

- Discharge refrigerant circuit
- Remove A/C compressor.
- Clean refrigerant circuit (flush with refrigerant R134a, refer to ⇒ "1.4.13 Refrigerant Circuit Flushing With Refrigerant R134a", page 32 or blow through using compressed air and nitrogen, refer to ⇒ "1.4.12 Refrigerant Circuit Flushing With Compressed Air and Nitrogen ", page 29).

Note

- *In the event of internal damage (compressor), check refrigerant hoses and condenser. If, for example, shavings have penetrated, clean refrigerant hoses and condenser (flush with refrigerant R134a, refer to ⇒ "1.4.13 Refrigerant Circuit Flushing With Refrigerant R134a", page 32 or blow through using compressed air or nitrogen, refer to ⇒ "1.4.12 Refrigerant Circuit Flushing With Compressed Air and Nitrogen ", page 29), Replace refrigerant hoses if necessary.*
- *In vehicles with two evaporators, the refrigerant oil quantity in refrigerant circuit may be greater than the quantity which is found in the replacement compressor, if necessary add the remaining refrigerant oil quantity to the refrigerant circuit. Refer to ⇒ "1.4.12 Refrigerant Circuit Flushing With Compressed Air and Nitrogen ", page 29 .*

Downloaded from www.Manualslib.com manuals search engine

– Replace dryer cartridge, receiver or accumulator and restrictor.
– Examine expansion valve for dirt or corrosion; replace if necessary
– Assemble, evacuate and charge refrigerant circuit.

5.5 Receiver or Accumulator and Restrictor, Replacing After Cleaning Refrigerant Circuit

Note

Cleaning refrigerant circuit means flushing it with refrigerant R134a, refer to
⇒ "1.4.13 Refrigerant Circuit Flushing With Refrigerant R134a", page 32 or blowing through with compressed air and nitrogen, refer to
⇒ "1.4.12 Refrigerant Circuit Flushing With Compressed Air and Nitrogen ", page 29 .

For example, on account of ingress of moisture (refrigerant circuit open for lengthy period) or contamination

– Discharge refrigerant circuit
– Remove A/C compressor.
– Rectify cause of trouble.
– Clean refrigerant circuit (flush with refrigerant R134a, refer to ⇒ "1.4.13 Refrigerant Circuit Flushing With Refrigerant R134a", page 32 or blow through using compressed air and nitrogen, refer to ⇒ "1.4.12 Refrigerant Circuit Flushing With Compressed Air and Nitrogen ", page 29).
– Examine expansion valve for dirt or corrosion; replace if necessary
– Remove oil drain plug from A/C compressor.

Note

Different versions of the oil drain plug and its seal (it can be either an O-ring or a gasket; always replace). Refer to
⇒ "5.1 Leaking or Damaged Components Except A/C Compressor, Accumulator or Receiver - Circuit Empty of Refrigerant", page 191 and to the Electronic Parts Catalog (ETKA).

Reproduction by copyright. Copying for private or commercial purposes, in part or in whole, is not permitted unless authorised by AUDI AG. AUDI AG does not guarantee or accept any liability with respect to the correctness of information in this document. Copyright by AUDI AG.

– To accelerate drainage of refrigerant oil, rotate compressor e.g. by way of clutch plate of A/C clutch for example.
– Pour old refrigerant oil out of A/C compressor.

Note

Workshop-specific instructions, refer to Audi ServiceNet, HSO Environment.

All A/C compressors

– Then add to the compressor the new refrigerant oil quantity which matches the refrigerant oil quantity in the replacement compressor (or the specified refrigerant oil quantity in vehicles

Downloaded from www.Manualslib.com manuals search engine

with two evaporators if necessary). Refer to
⇒ "3.4 Refrigerant Oil Capacities", page 119 .

Note

- *Use different refrigerant oils and quantities for the various compressors. Refer to*
  ⇒ "3.4 Refrigerant Oil Capacities", page 119 .
- *To ensure compressor lubrication on start-up, at least 80 cm^3 of refrigerant oil must be poured into the compressor, the remainder can be added for example to the new reservoir or receiver. Refer to*
  ⇒ "3.4 Refrigerant Oil Capacities", page 119 .
- *If dirt has penetrated into the compressor with the refrigerant circuit open (for example, after an accident), compressor is to be replaced.*
- *In vehicles with two evaporators, the refrigerant oil quantity in refrigerant circuit may be greater than the quantity which is found in the replacement compressor, if necessary add the remaining refrigerant oil quantity to the refrigerant circuit. Refer to*
  ⇒ "1.4.12 Refrigerant Circuit Flushing With Compressed Air and Nitrogen ", page 29 .

– Replace receiver or accumulator and restrictor.

– Assemble, evacuate and charge refrigerant circuit.

5.6 Receiver or Accumulator, Replacing Without Flushing Refrigerant Circuit

Note

Cleaning refrigerant circuit means flushing it with refrigerant R134a, refer to
⇒ "1.4.13 Refrigerant Circuit Flushing With Refrigerant R134a", page 32 *or blowing through with compressed air and nitrogen, refer to*
⇒ "1.4.12 Refrigerant Circuit Flushing With Compressed Air and Nitrogen ", page 29 .

For example, in the event of accident damage; no escape of refrigerant and no ingress of moisture and dirt into circuit

Protected by copyright. Copying or private or commercial purposes, in part or in whole, is not permitted unless authorised by AUDI AG. AUDI AG does not guarantee or accept any liability with respect to the correctness of information in this document. Copyright by AUDI AG.

– Discharge refrigerant circuit

– Replace restrictor.

– Remove receiver or accumulator.

– Remove dirt from receiver or reservoir.

– Weigh receiver or reservoir removed.

– Add refrigerant oil to the reservoir until it is the same weight as the reservoir that was removed.

– Install new receiver or reservoir.

– Assemble, evacuate and charge refrigerant circuit.

Downloaded from www.Manualslib.com manuals search engine

5.7 Dryer Cartridge and Dryer Bag, Replacing Without Flushing Refrigerant Circuit

Note

Cleaning refrigerant circuit means flushing it with refrigerant R134a, refer to ⇒ "1.4.13 Refrigerant Circuit Flushing With Refrigerant R134a", page 32 or blowing through with compressed air and nitrogen, refer to ⇒ "1.4.12 Refrigerant Circuit Flushing With Compressed Air and Nitrogen ", page 29 .

Protected by copyright. Copying for private or commercial purposes, in part or in whole, is not permitted unless authorised by AUDI AG. AUDI AG does not guarantee or accept any liability with respect to the correctness of information in this document. Copyright by AUDI AG.

For example, no escape of refrigerant and no entry of moisture and dirt into circuit.

- Discharge refrigerant circuit.
- Replace the dryer cartridge. Refer to ⇒ Heating, Ventilation and Air Conditioning; Rep. Gr. 87 ; Removal and Installation (vehicle-specific repair manual).
- Assemble, evacuate and charge refrigerant circuit.

Downloaded from www.Manualslib.com manuals search engine

6 Special Tools

⇒ "6.1 Commercially Available Tools and Materials", page 198

⇒ "6.2 Improvised Tools", page 203

6.1 Commercially Available Tools and Materials

Service station (this illustration shows, as example, V.A.G 1885. For currently available service stations, refer to Special Tools and Equipment Catalog).

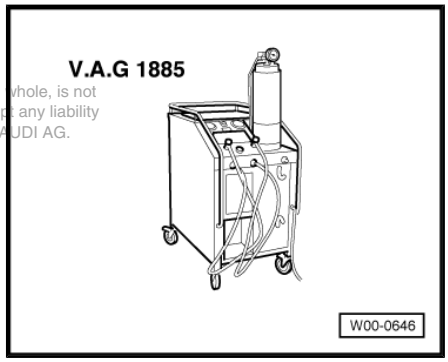

Protected by copyright. Copying for private or commercial purposes, in part or in whole, is not permitted unless authorised by AUDI AG. AUDI AG does not guarantee or accept any liability with respect to the suitability of information or advice for a particular purpose. Copyright by AUDI AG.

- Procedure: the operations "testing, extraction (recycling), evacuation and charging" are to be performed in line with the relevant operating instructions.
- The filters and dryers installed are to be replaced at the latest at the end of the period of use specified in the operating instructions and whenever the station has been drained (keep replacement filter to hand. Available from equipment manufacturer, refer to operating instructions.
- Use can also be made of service stations not described here. Refer to Special Tools and Equipment Catalog.
- Currently available service stations are equipped with a program for flushing the refrigerant circuit; the flushing equipment required for flushing is also included in delivery. Refer to Special Tools and Equipment Catalog.

Note

- *This A/C service station has the following known units: charging cylinder, pressure gauge set, vacuum pump, shutoff valves and charging hoses.*
- *One quick-release coupling each (for service connections on high and low-pressure side) is included in the scope of delivery of this service station.*
- *Current vacuum display (LED) appears after pressing the Evacuate button again.*

Leak Detector V.A.G 1796

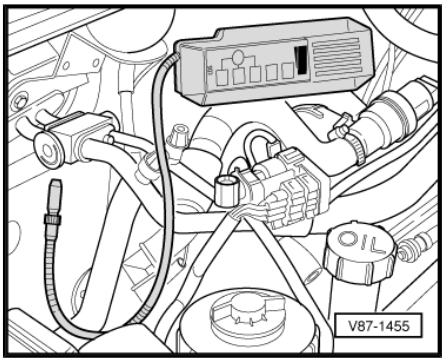

Downloaded from www.Manualslib.com manuals search engine

Leak Detection System VAS 6201

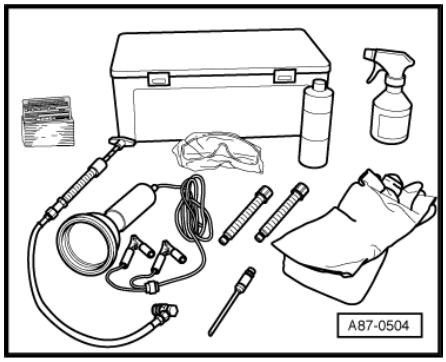

Puller for A/C Clutch V.A.G 1719 (for Zexel A/C Compressor)

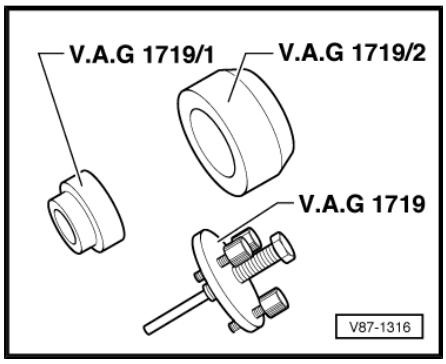

Adapter Set For Refrigerant Circuit R134a V.A.G 1785/1-10

Adapter for cleaning refrigerant circuit (flush with refrigerant R134a, refer to
⇒ “1.4.13 Refrigerant Circuit Flushing With Refrigerant R134a“, page 32 or blow through with compressed air and nitrogen, refer to
⇒ “1.4.12 Refrigerant Circuit Flushing With Compressed Air and Nitrogen “, page 29).

A - 5/8"-18 UNF thread for conical seal

B - Union nut (for connection with O-ring) with thread

- M 18x1.5 V.A.G 1785/1
- M 20x1.5 V.A.G 1785/2
- M 24x1.5 V.A.G 1785/3
- M 28x1.5 V.A.G 1785/4

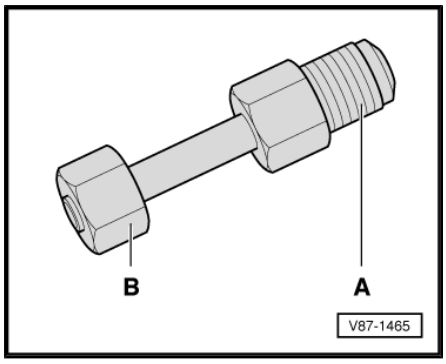

Adapter

A - 5/8"-18 UNF thread for conical seal

B - Threaded connection for O-ring

- M18 x 1.5 V.A.G 1785/5
- M20 x 1.5 V.A.G 1785/6
- M24 x 1.5 V.A.G 1785/7
- M28 x 1.5 V.A.G 1785/8

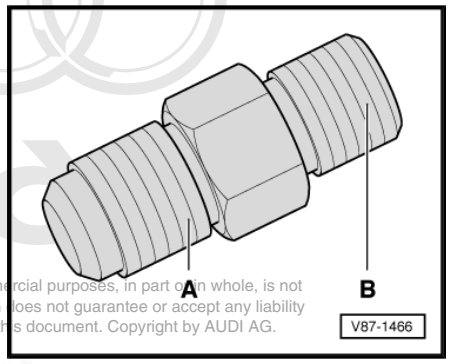

Protected by copyright. Copying for private or commercial purposes, in part or in whole, is not permitted unless authorised by AUDI AG. AUDI AG does not guarantee or accept any liability with respect to the correctness of information in this document. Copyright by AUDI AG.

Downloaded from www.Manualslib.com manuals search engine

Valve adapter

A - 5/8"-18 UNF thread for conical seal

B - Internal thread with valve opener

- M10 x 1.25 V.A.G 1785/9 (for connections with valve on high-pressure side)
- M10 x 1.5 V.A.G 1785/10 (for connections with valve on high-pressure side)

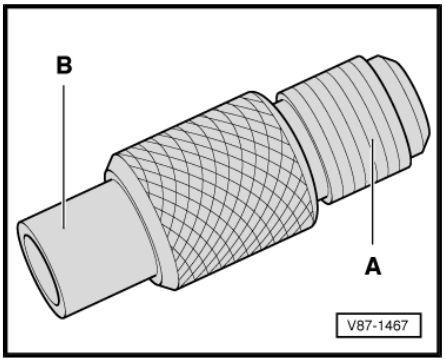

Note

- *A Schrader valve is screwed into connection -A-.*
- *A valve opener must be installed in the charging hose connection.*
- *Various adapters from adapter set are also part of the Aapter case for VW/Audi passenger cars -VAS 6338/1-*

Adapter Set With Service Connection V.A.G 1786

A - Adapter with union nut -V.A.G 1786/1- (only for connections with small valve insert on low-pressure side)

B - Charging hose with union nut 5/8"-18 UNF (short version)

C - Adapter with service connection -V.A.G 1786/2-

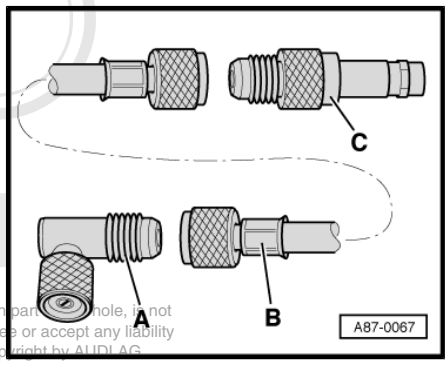

Note

- *For connections with large valve insert (standard on Zexel / Valeo compressors, gradual change to small valve insert as of 10.94), use is to be made of adapter V.A.G 1785/10 (remove valve from adapter V.A.G 1785/10 or install valve opener in charging hose -B-).*
- *Beginning the production year 2006, the name of the Zexel A/C compressor was changed from Zexel to Valeo.*

This document is for internal use only and shall not be disclosed to third parties. For commercial purposes, in part or whole, it is not permitted to reproduce, distribute or make available. AUDI AG does not guarantee or accept any liability with respect to the accuracy, completeness or current relevance of the content. Copyright by AUDI AG.

Socket Insert -T10364-

Note

For removing and installing Service connections and valve units when the refrigerant circuit is empty.

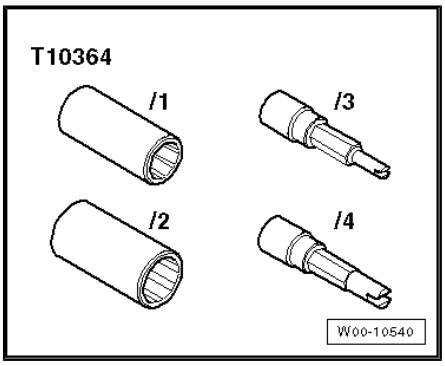

Downloaded from www.Manualslib.com manuals search engine

Fin Comb

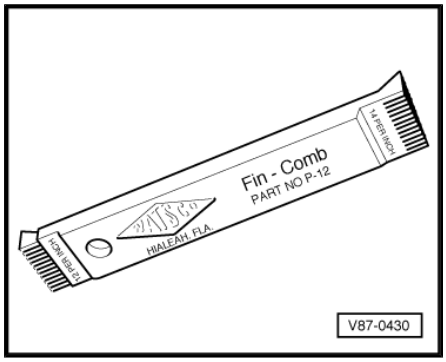

Fill Hoses

5/8"-18 UNF thread

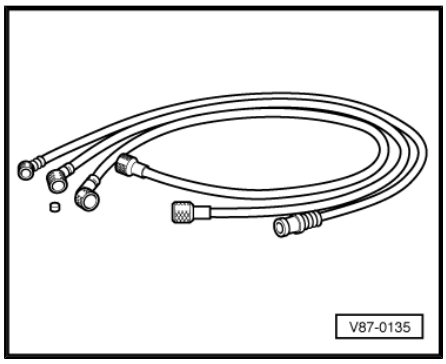

Note

- *Use differently colored charging hoses (1800 mm long).*
- *Have valve opener and spare seals to hand.*
- *A charging hose in short version is also included in Adapter case for VW/Audi passenger cars -VAS 6338/1- .*

Connection Piece For Refrigerant Cylinder With Seal, Quick-Release Coupling Connection Or Threaded Connection 5/8" - 18 UNF

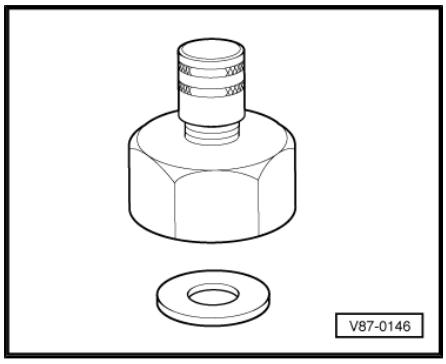

Valve Caps With Spare Seals (for 5/8"-18 UNF thread)

Seals can also be used for charging hoses.

Protected by copyright. Copying for private or commercial purposes, in part or in whole, is not permitted unless authorised by AUDI AG. AUDI AG does not guarantee or accept any liability with respect to the correctness of information in this document. Copyright by AUDI AG.

Note

Valve caps with spare seals are also included in Adapter case for VW/Audi passenger cars -VAS 6338/1- .

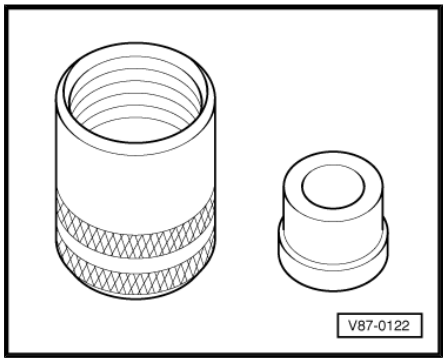

Downloaded from www.Manualslib.com manuals search engine

Pressure Gauge Set With Pressure Reducer For Nitrogen (Maximum Reducing Pressure: 15 bar).

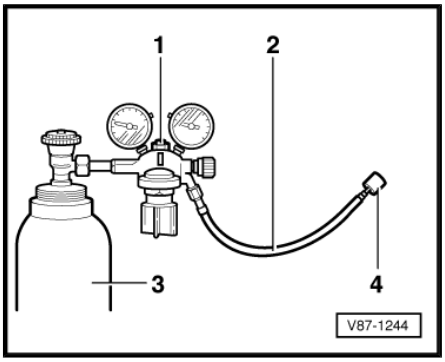

1 - Pressure gauge set

2 - Pressure hose (inner diameter 5 mm, length 2 m)

3 - Nitrogen

4 - Hose fitting

Note

For connection to adapter V.A.G 1785 with 5/8"-18 UNF thread

Quick-Release Coupling Adapter For Service Connections

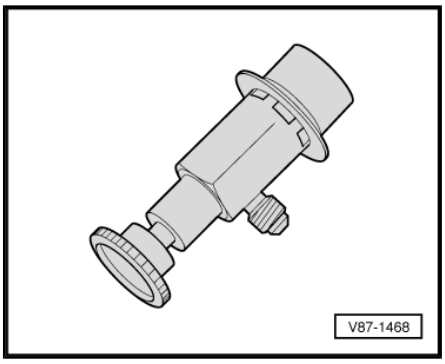

- High-pressure side, nominal size 16 mm
- Low-pressure side, nominal size 13 mm
- 2x release tool (Sharan)

Note

This quick-release coupling is delivered with the service station.

Overview	Page
A/C service station with flushing device (currently available service stations, refer to Special Tools and Equipment Catalog) – With program installed for flushing the refrigerant circuit using refrigerant R134a, and corresponding flushing equipment	see illustration and Special Tools and Equipment Catalog
Refrigerant Circuit Flushing Device (flushing devices that can currently be delivered). Refer to Special Tools and Equipment Catalog. – For flushing the refrigerant circuit using refrigerant R134a, also to be used for older service stations with a reservoir capacity of at least 10 kg refrigerant R134a (flushing must be performed manually).	Special Tools and Equipment Catalog
Adapter case for VW/Audi passenger cars -VAS 6338/1- – For connecting service station to refrigerant circuit and for bridging certain removed components while flushing	Special Tools and Equipment Catalog
Leak detector V.A.G 1796	see illustration
Puller for A/C clutch (Zexel A/C compressor) V.A.G 1719	see illustration
Adapter set for refrigerant circuit R134a V.A.G 1785/1-10 – For connecting service station to refrigerant circuit and for bridging certain removed components while flushing and blowing through	see illustration
Valve adapters V.A.G 1785/9 and V.A.G 1785/10	see illustration
Adapter set with service connection V.A.G 1786	see illustration
Combined fine filter unit for compressed-air system (oil, dirt and water separator as used for painting facilities) Special Tools and Equipment Catalog	see illustration
Replacing the O-ring seals, version, refer to Electronic Parts Catalog (ETKA)	see illustration
Refrigerant oil, refer to Electronic Parts Catalog (ETKA)	see illustration

Protected by copyright. Copying for private or commercial purposes, in part or in whole, is not permitted unless authorised by AUDI AG. AUDI AG does not guarantee or accept any liability with respect to the correctness of information in this document. Copyright by AUDI AG.

Downloaded from www.Manualslib.com manuals search engine

Overview	Page
Leak detection system VAS 6201 comprising: ◆ VAS6201/1 hand pump with low-pressure service hose, service connection coupling and check-valve ◆ VAS 6201/2 cartridge ◆ VAS 6201/3 cleaning agents ◆ UV leak detection lamp VAS 6201/4 ◆ Spare bulb for leak detection lamp VAS 6201/5 ◆ Safety goggles VAS 6201/6 ◆ Sticker VAS 6201/7 ◆ Protective gloves VAS 6201/9 ◆ Small tube VAS 6201/8 ◆ System case VAS 6201/10	see illustration
Adapter set for Service connections	see illustration and Special Tools and Equipment Catalog
Release Tool for Air Conditioner Couplings -T40149/-	Special Tools and Equipment Catalog
Removal tool -T40232-	Special Tools and Equipment Catalog

Protected by copyright. Copying for private or commercial purposes, in part or in whole, is not permitted unless authorised by AUDI AG. AUDI AG does not guarantee or accept any liability with respect to the correctness of information in this document. Copyright by AUDI AG.

Overview	Page
Fin comb	see illustration
Charging hoses 5/8" - 18 UNF with valve opener	see illustration
Connection piece for refrigerant cylinder and seal with quick-release coupling connection or threaded connection 5/8" - 18 UNF	see illustration
Valve caps 5/8"-18 UNF	see illustration
Pressure gauge set with pressure reducer for nitrogen	see illustration
Quick-release coupling adapter for service connections, 2x included in scope of delivery of service station	see illustration
Open-open end wrench, size according to bolted joints at refrigerant pipes.	Not illustrated
Valve opener for charging hoses	Not illustrated
Connecting nipple for conical seal 5/8"-18 UNF	Not illustrated
Compressed-air gun with rubber end piece	Not illustrated
Valve opener for Schrader valve	Not illustrated
Hand shut-off valve 5/8"-18 UNF	Not illustrated
Recycling container for refrigerant R134a	Not illustrated
Digital thermometer	Not illustrated
Protective gloves not illustrated	Not illustrated
Protective glasses	Not illustrated
Refrigerant R134a with cylinder (capacity as required)	Not illustrated

6.2 Improvised Tools

Overview	Page
Charging hose with connection for workshop compressed-air system	Not illustrated

Downloaded from www.Manualslib.com manuals search engine

Charging Hose With Connection For Workshop Compressed-Air System

A - Charging hose 5/8" - 18 UNF** (version with large inner diameter)

B - Connection for workshop compressed-air system ** (always use filter)

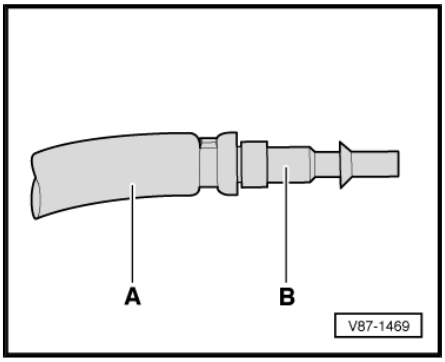

Edition 01272011

Protected by copyright. Copying for private or commercial purposes, in part or in whole, is not permitted unless authorised by AUDI AG. AUDI AG does not guarantee or accept any liability with respect to the correctness of information in this document. Copyright by AUDI AG.

Downloaded from www.Manualslib.com manuals search engine

Cautions & Warnings

Please read these WARNINGS and CAUTIONS before proceeding with maintenance and repair work. You must answer that you have read and you understand these WARNINGS and CAUTIONS before you will be allowed to view this information.

- If you lack the skills, tools and equipment, or a suitable workshop for any procedure described in this manual, we suggest you leave such repairs to an authorized Audi retailer or other qualified shop. We especially urge you to consult an authorized Audi retailer before beginning repairs on any vehicle that may still be covered wholly or in part by any of the extensive warranties issued by Audi.

- Disconnect the battery negative terminal (ground strap)whenever you work on the fuel system or the electrical system. Do not smoke or work near heaters or other fire hazards. Keep an approved fire extinguisher handy.

- Audi is constantly improving its vehicles and sometimes these changes, both in parts and specifications, are made applicable to earlier models. Therefore, part numbers listed in this manual are for reference only. Always check with your authorized Audi retailer parts department for the latest information.

- Any time the battery has been disconnected on an automatic transmission vehicle, it will be necessary to reestablish Transmission Control Module (TCM) basic settings using the VAG 1551 Scan Tool (ST).

- Never work under a lifted vehicle unless it is solidly supported on stands designed for the purpose. Do not support a vehicle on cinder blocks, hollow tiles or other props that may crumble under continuous load. Never work under a vehicle that is supported solely by a jack. Never work under the vehicle while the engine is running.

- For vehicles equipped with an anti-theft radio, be sure of the correct radio activation code before disconnecting the battery or removing the radio. If the wrong code is entered when the power is restored, the radio may lock up and become inoperable, even if the correct code is used in a later attempt.

- If you are going to work under a vehicle on the ground, make sure that the ground is level. Block the wheels to keep the vehicle from rolling. Disconnect the battery negative terminal (ground strap) to prevent others from starting the vehicle while you are under it.

- Do not attempt to work on your vehicle if you do not feel well. You increase the danger of injury to yourself and others if you are tired, upset or have taken medicine or any other substances that may impair you or keep you from being fully alert.

- Never run the engine unless the work area is well ventilated. Carbon monoxide (CO) kills.

- Always observe good workshop practices. Wear goggles when you operate machine tools or work with acid. Wear goggles, gloves and other protective clothing whenever the job requires working with harmful substances.

- Tie long hair behind your head. Do not wear a necktie, a scarf, loose clothing, or a necklace when you work near machine tools or running engines. If your hair, clothing, or jewelry were to get caught in the machinery, severe injury could result.

Protected by copyright. Copying for private or commercial purposes, in part or in whole, is not permitted unless authorised by AUDI AG. AUDI AG does not guarantee or accept any liability with respect to the correctness of information in this document. Copyright by AUDI AG.

© 2002 Audi of America, Inc.
All rights reserved. Information contained in this document is based on the latest information available at the time of printing and is subject to the copyright and other intellectual property rights of Audi of America, Inc., its affiliated companies and its licensors. All rights are reserved to make changes at any time without notice. No part of this document may be reproduced, stored in a retrieval system, or transmitted in any form or by any means, electronic, mechanical, photocopying, recording, or otherwise, nor may these materials be modified or reposted to other sites, without the prior expressed written permission of the publisher.
Version 1.0

Downloaded from www.Manualslib.com manuals search engine

Cautions & Warnings

- Do not re-use any fasteners that are worn or deformed in normal use. Some fasteners are designed to be used only once and are unreliable and may fail if used a second time. This includes, but is not limited to, nuts, bolts, washers, circlips and cotter pins. Always follow the recommendations in this manual - replace these fasteners with new parts where indicated, and any other time it is deemed necessary by inspection.

- Illuminate the work area adequately but safely. Use a portable safety light for working inside or under the vehicle. Make sure the bulb is enclosed by a wire cage. The hot filament of an accidentally broken bulb can ignite spilled fuel or oil.

- Friction materials such as brake pads and clutch discs may contain asbestos fibers. Do not create dust by grinding, sanding, or by cleaning with compressed air. Avoid breathing asbestos fibers and asbestos dust. Breathing asbestos can cause serious diseases such as asbestosis or cancer, and may result in death.

- Finger rings should be removed so that they cannot cause electrical shorts, get caught in running machinery, or be crushed by heavy parts.

- Before starting a job, make certain that you have all the necessary tools and parts on hand. Read all the instructions thoroughly, do not attempt shortcuts. Use tools that are appropriate to the work and use only replacement parts meeting Audi specifications. Makeshift tools, parts and procedures will not make good repairs.

- Catch draining fuel, oil or brake fluid in suitable containers. Do not use empty food or beverage containers that might mislead someone into drinking from them. Store flammable fluids away from fire hazards. Wipe up spills at once, but do not store the oily rags, which can ignite and burn spontaneously.

- Use pneumatic and electric tools only to loosen threaded parts and fasteners. Never use these tools to tighten fasteners, especially on light alloy parts. Always use a torque wrench to tighten fasteners to the tightening torque listed.

- Keep sparks, lighted matches, and open flame away from the top of the battery. If escaping hydrogen gas is ignited, it will ignite gas trapped in the cells and cause the battery to explode.

- Be mindful of the environment and ecology. Before you drain the crankcase, find out the proper way to dispose of the oil. Do not pour oil onto the ground, down a drain, or into a stream, pond, or lake. Consult local ordinances that govern the disposal of wastes.

- The air-conditioning (A/C) system is filled with a chemical refrigerant that is hazardous. The A/C system should be serviced only by trained automotive service technicians using approved refrigerant recovery/recycling equipment, trained in related safety precautions, and familiar with regulations governing the discharging and disposal of automotive chemical refrigerants.

- Before doing any electrical welding on vehicles equipped with anti-lock brakes (ABS), disconnect the battery negative terminal (ground strap) and the ABS control module connector.

- Do not expose any part of the A/C system to high temperatures such as open flame. Excessive heat will increase system pressure and may cause the system to burst.

Protected by copyright. Copying for private or commercial purposes, in part or in whole, is not permitted. Compilation, processing, distribution and also storage and use on other electronic media is prohibited without the express written permission of Audi AG.

© 2002 Audi of America, Inc.
All rights reserved. Information contained in this document is based on the latest information available at the time of printing and is subject to the copyright and other intellectual property rights of Audi of America, Inc., its affiliated companies and its licensors. All rights are reserved to make changes at any time without notice. No part of this document may be reproduced, stored in a retrieval system, or transmitted in any form or by any means, electronic, mechanical, photocopying, recording, or otherwise, nor may these materials be modified or reposted to other sites, without the prior expressed written permission of the publisher.
Version 1.0

Downloaded from www.Manualslib.com manuals search engine

Cautions & Warnings

- When boost-charging the battery, first remove the fuses for the Engine Control Module (ECM), the Transmission Control Module (TCM), the ABS control module, and the trip computer. In cases where one or more of these components is not separately fused, disconnect the control module connector(s).

- Some of the vehicles covered by this manual are equipped with a supplemental restraint system (SRS), that automatically deploys an airbag in the event of a frontal impact. The airbag is operated by an explosive device. Handled improperly or without adequate safeguards, it can be accidentally activated and cause serious personal injury. To guard against personal injury or airbag system failure, only trained Audi Service technicians should test, disassemble or service the airbag system.

- Do not quick-charge the battery (for boost starting) for longer than one minute, and do not exceed 16.5 volts at the battery with the boosting cables attached. Wait at least one minute before boosting the battery a second time.

- Never use a test light to conduct electrical tests of the airbag system. The system must only be tested by trained Audi Service technicians using the VAG 1551 Scan Tool (ST) or an approved equivalent. The airbag unit must never be electrically tested while it is not installed in the vehicle.

- Some aerosol tire inflators are highly flammable. Be extremely cautious when repairing a tire that may have been inflated using an aerosol tire inflator. Keep sparks, open flame or other sources of ignition away from the tire repair area. Inflate and deflate the tire at least four times before breaking the bead from the rim. Completely remove the tire from the rim before attempting any repair.

- When driving or riding in an airbag-equipped vehicle, never hold test equipment in your hands or lap while the vehicle is in motion. Objects between you and the airbag can increase the risk of injury in an accident.

I have read and I understand these Cautions and Warnings.

Protected by copyright. Copying for private or commercial purposes, in part or in whole, is not permitted unless authorised by AUDI AG. AUDI AG does not guarantee or accept any liability with respect to the correctness of information in this document. Copyright by AUDI AG.

© 2002 Audi of America, Inc.
All rights reserved. Information contained in this document is based on the latest information available at the time of printing and is subject to the copyright and other intellectual property rights of Audi of America, Inc., its affiliated companies and its licensors. All rights are reserved to make changes at any time without notice. No part of this document may be reproduced, stored in a retrieval system, or transmitted in any form or by any means, electronic, mechanical, photocopying, recording, or otherwise, nor may these materials be modified or reposted to other sites, without the prior expressed written permission of the publisher.
Version 1.0

Downloaded from www.Manualslib.com manuals search engine